US 20120229616A1

(19) United States

(12) Patent Application Publication

(10) Pub. No.: US 2012/0229616 A1

(43) Pub. Date: Sep. 13, 2012

Koike et al.

(54) ELECTRONIC MIRRORING SYSTEM

(75) Inventors: **Hiroshi Koike**, Tokyo (JP); **Masanori Mori**, Tokyo (JP); **Noriko Matsumoto**, Tokyo (JP)

(73) Assignee: **NON-GRID INC.**, Tokyo (JP)

(21) Appl. No.: **13/120,585**

(22) PCT Filed: **Mar. 7, 2011**

(86) PCT No.: **PCT/JP2011/055269**

§ 371 (c)(1), (2), (4) Date: **Jun. 7, 2011**

Publication Classification

(51) **Int. Cl.**
H04N 7/18 (2006.01)

(52) **U.S. Cl.** **348/77**; 348/E07.085

(57) **ABSTRACT**

An electronic mirroring system comprises a mirroring unit (**12**) consisted of a flat panel television (**10**) attached a touch panel (**11**), a front video camera (**13**), a rear video camera (**14**), and a main unit (**21**). A front image and a back image are displayed on the flat panel television (**10**) of the mirroring unit (**12**) simultaneously.

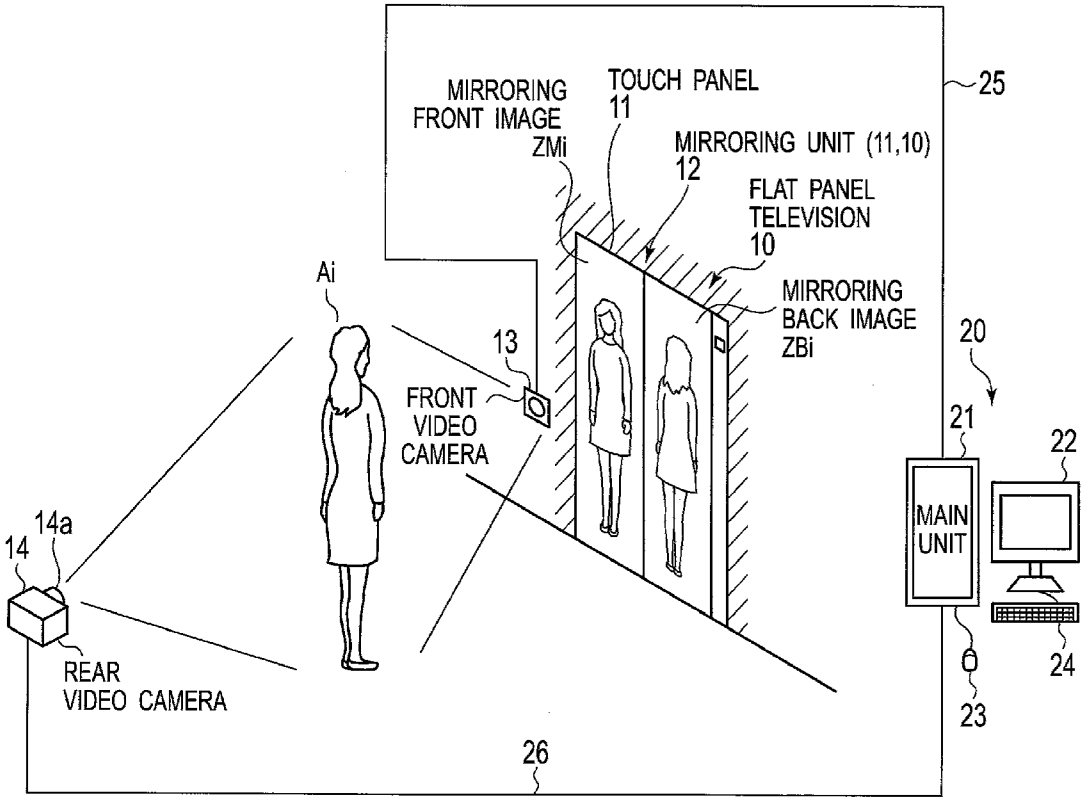

FIG. 1

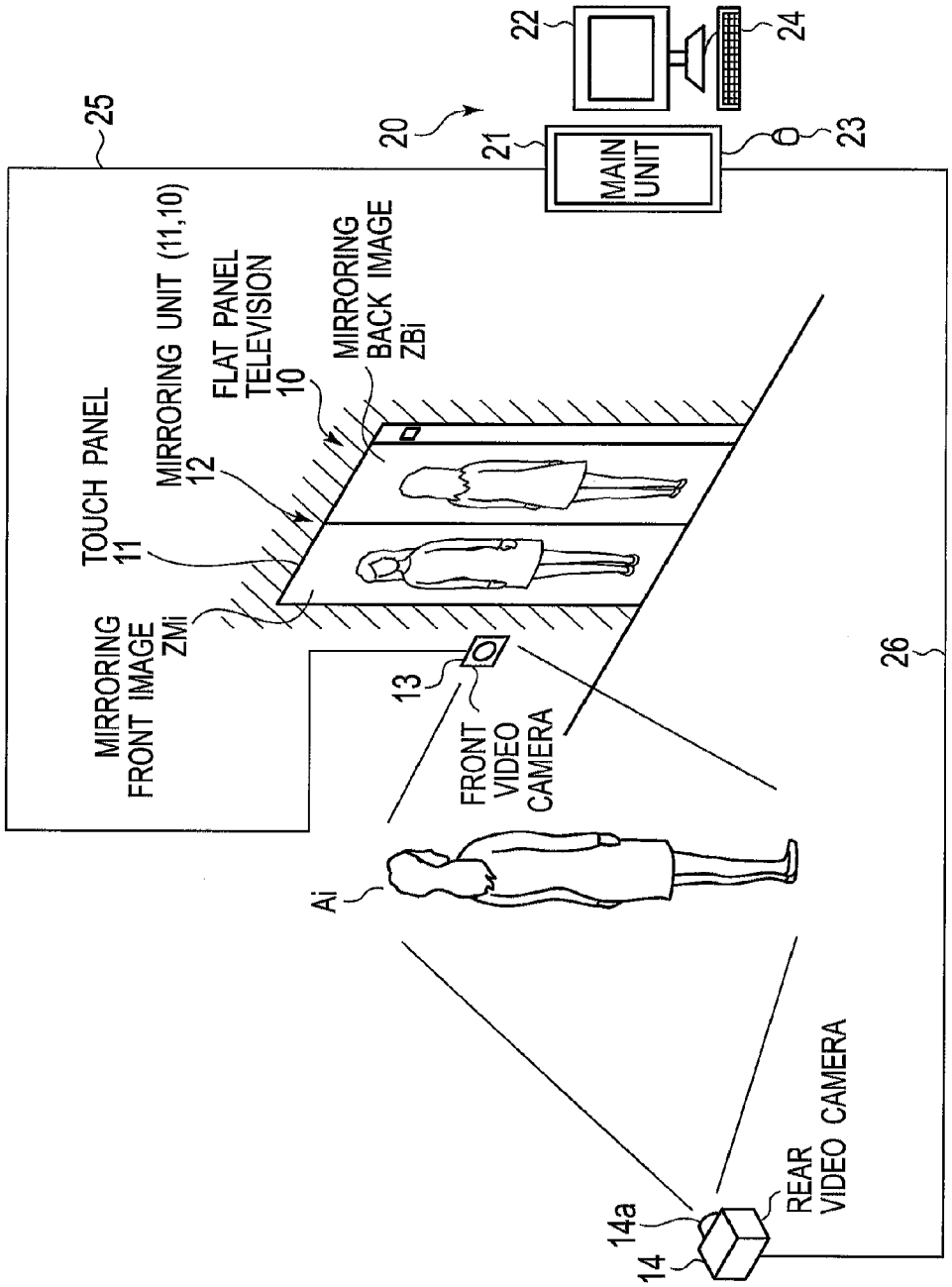
25
20
21
MAIN UNIT
22
23
24
TOUCH PANEL
11
MIRRORING UNIT (11,10)
12
FLAT PANEL TELEVISION
10
MIRRORING BACK IMAGE
ZBi
MIRRORING FRONT IMAGE
ZMi
13
FRONT VIDEO CAMERA
Ai
26
14a
14
REAR VIDEO CAMERA

FIG. 2

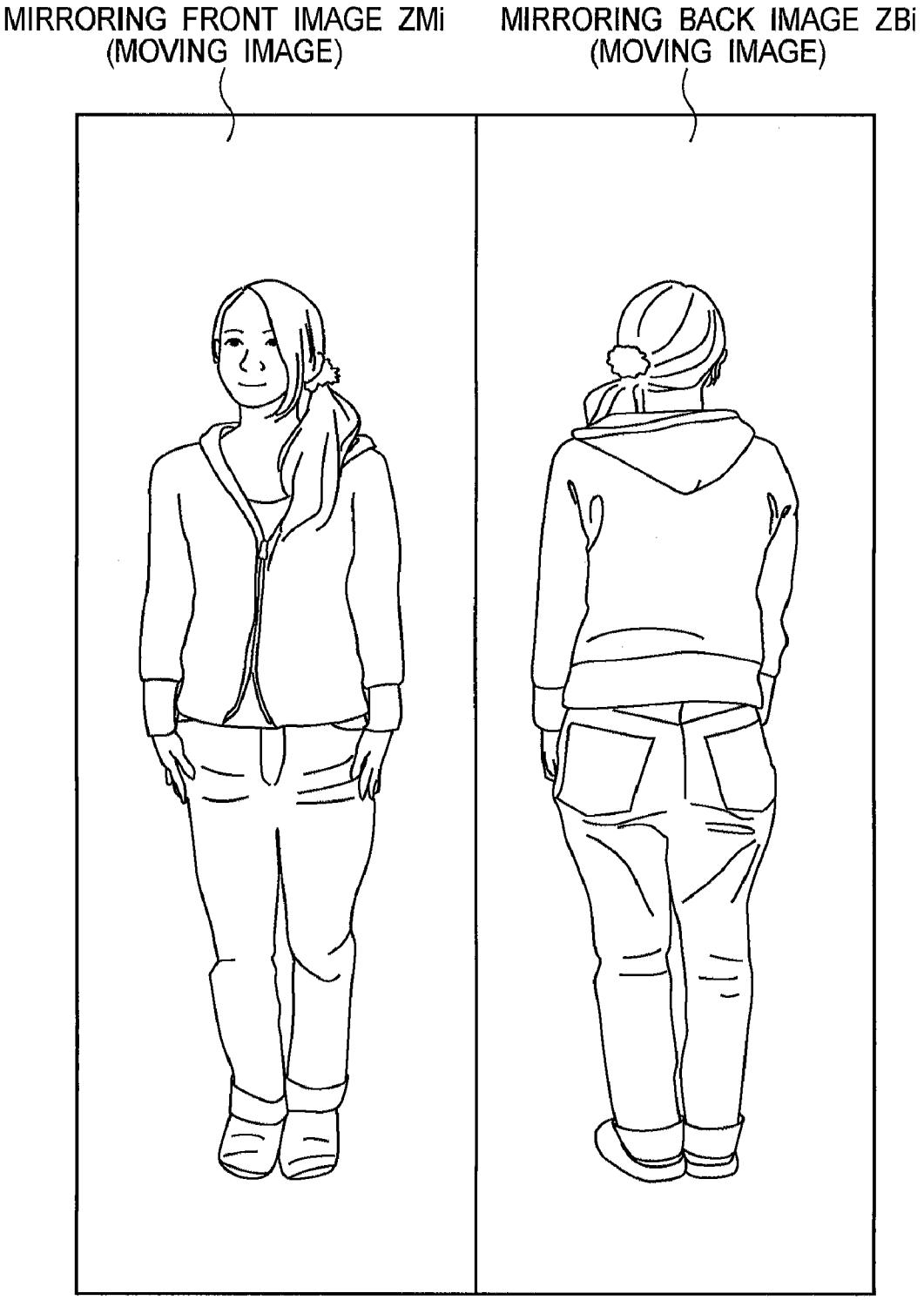
MIRRORING FRONT IMAGE ZMi
(MOVING IMAGE)
MIRRORING BACK IMAGE ZBi
(MOVING IMAGE)

FIG. 3

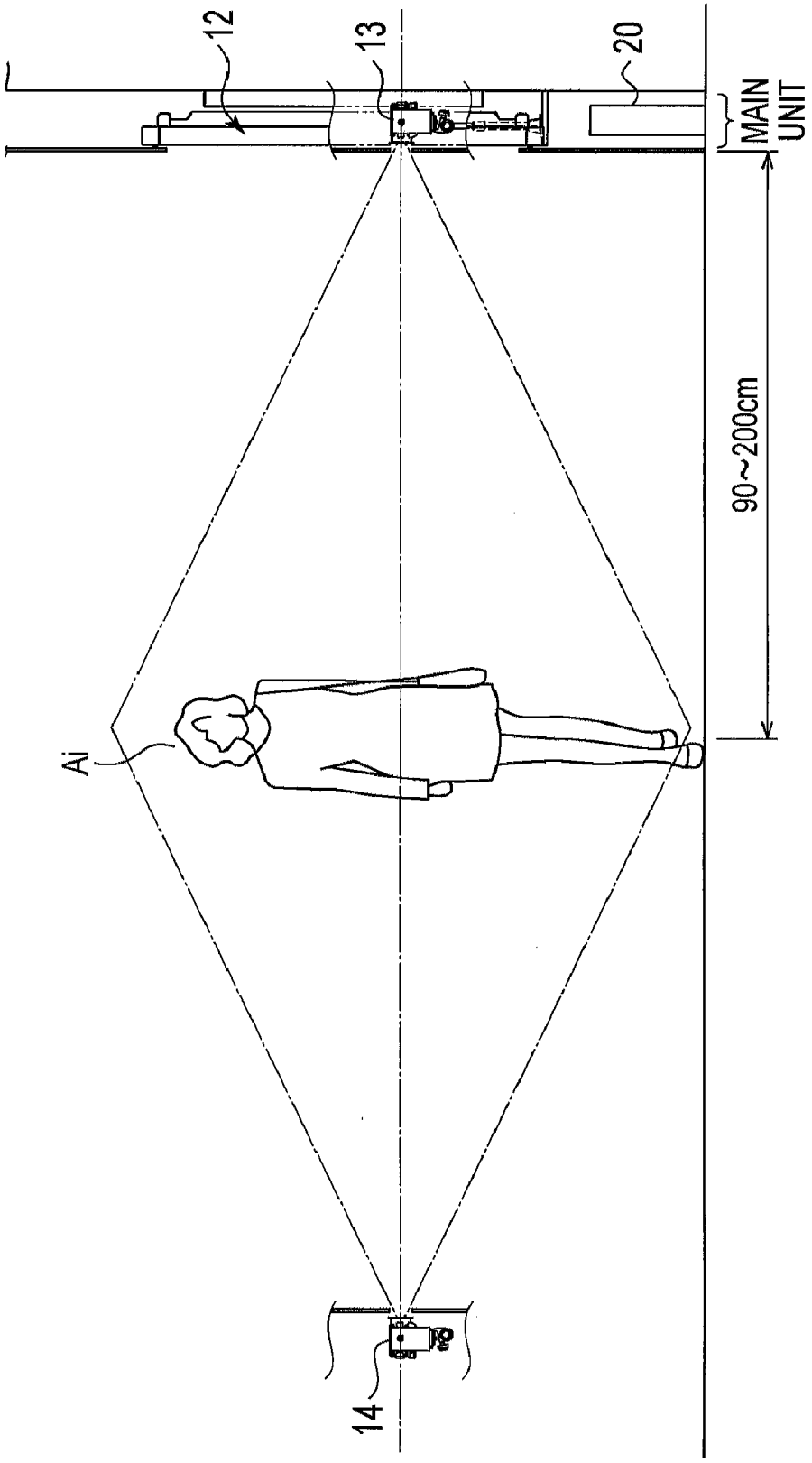

FIG. 4

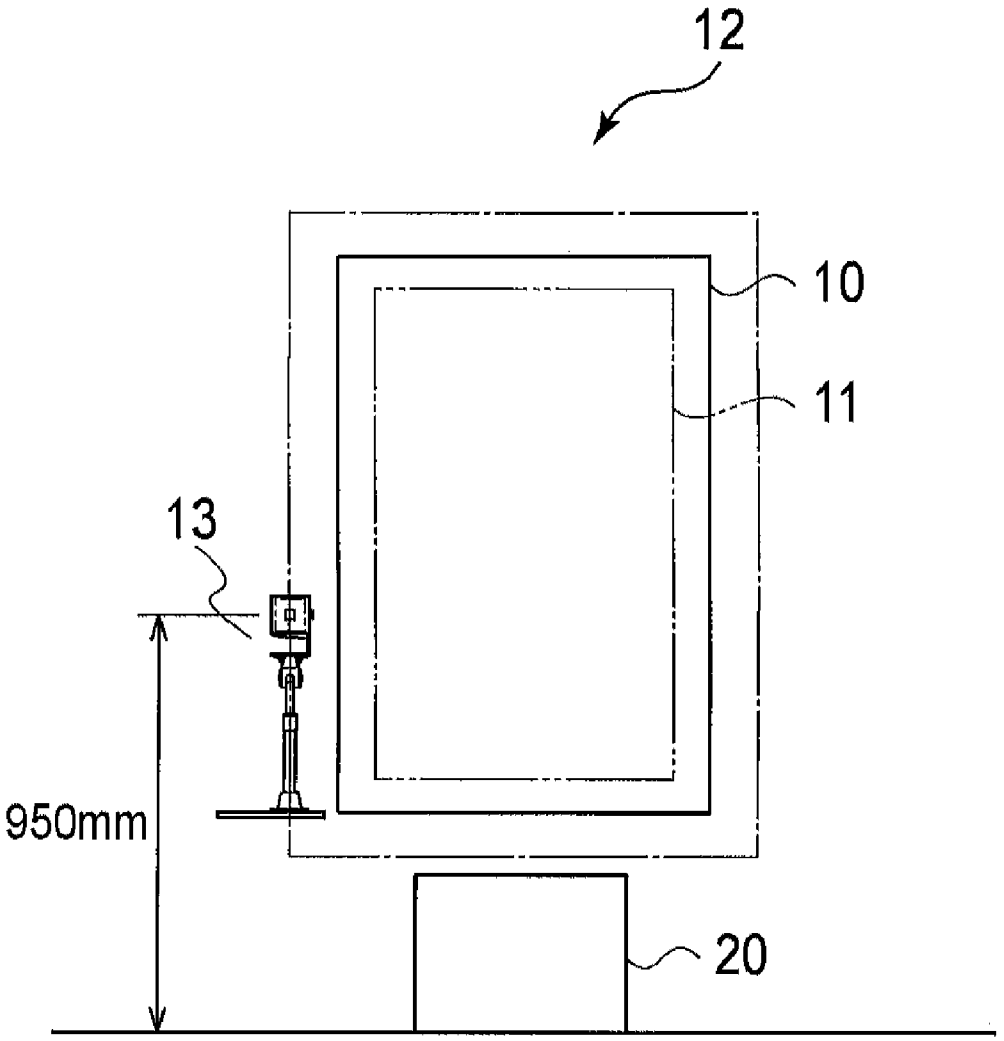

FIG. 5

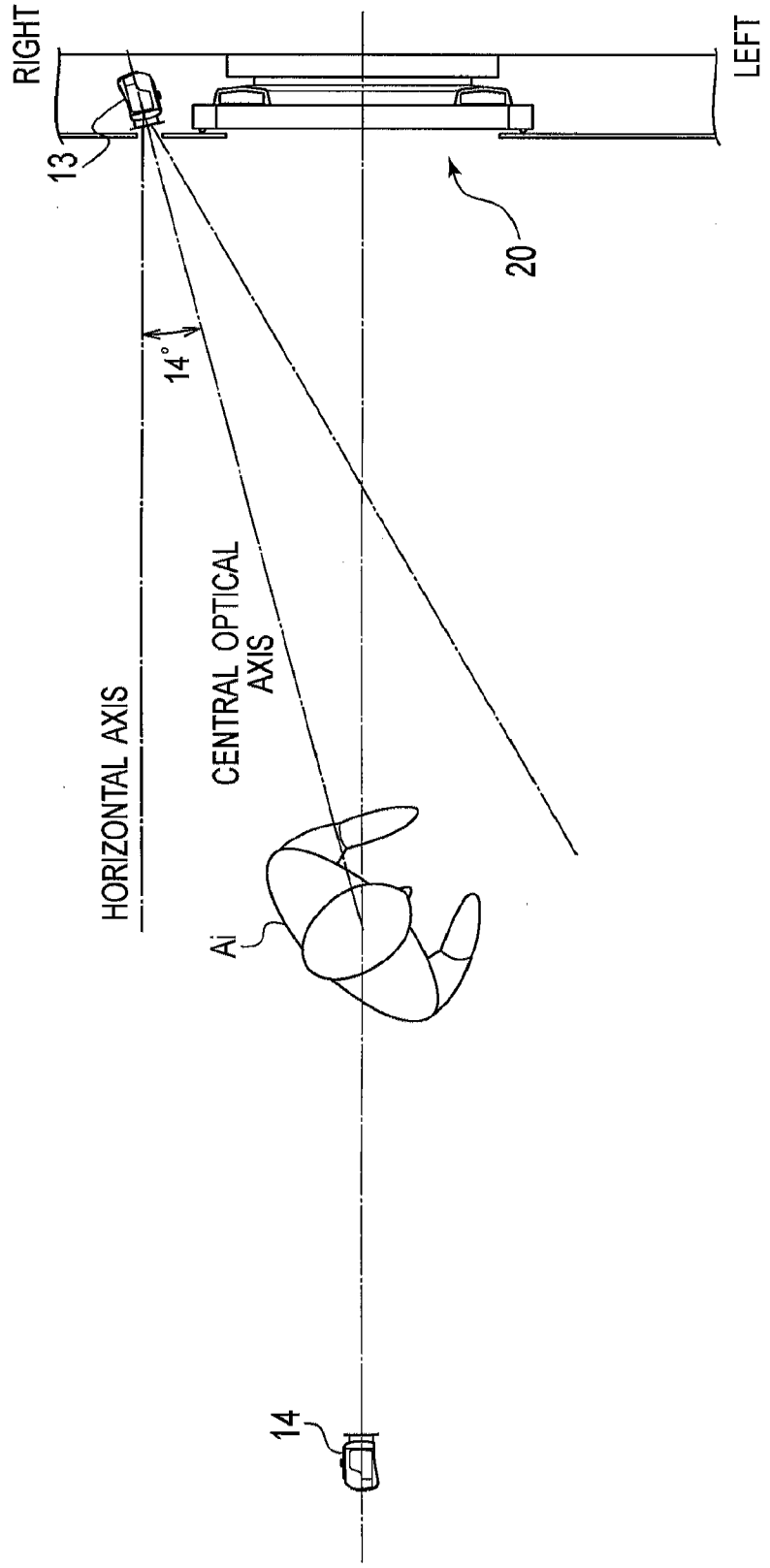
RIGHT
LEFT
13
20
14°
HORIZONTAL AXIS
CENTRAL OPTICAL AXIS
Ai
14

FIG. 6

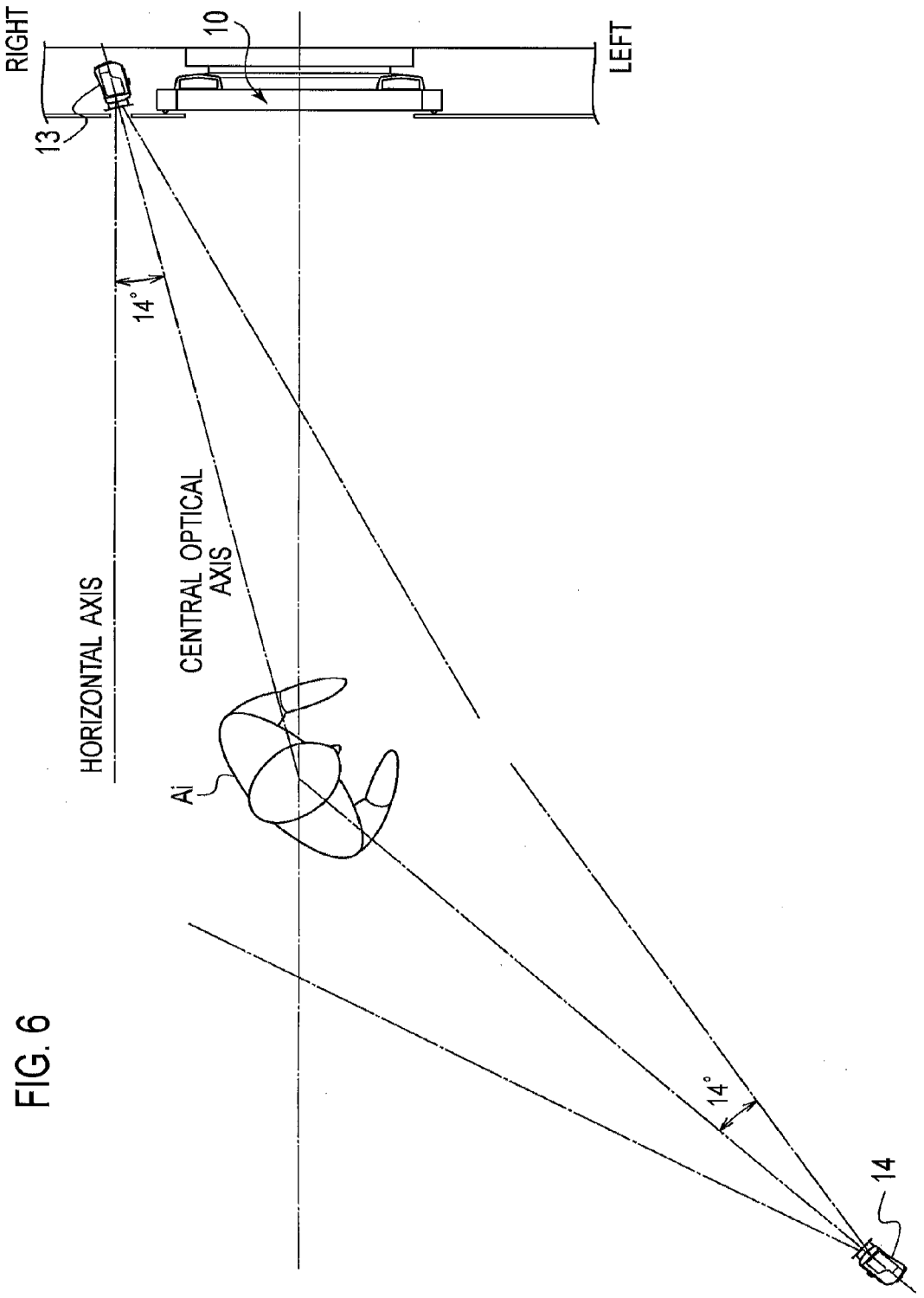
RIGHT
LEFT
10
13
14°
HORIZONTAL AXIS
CENTRAL OPTICAL AXIS
Ai
14°
14

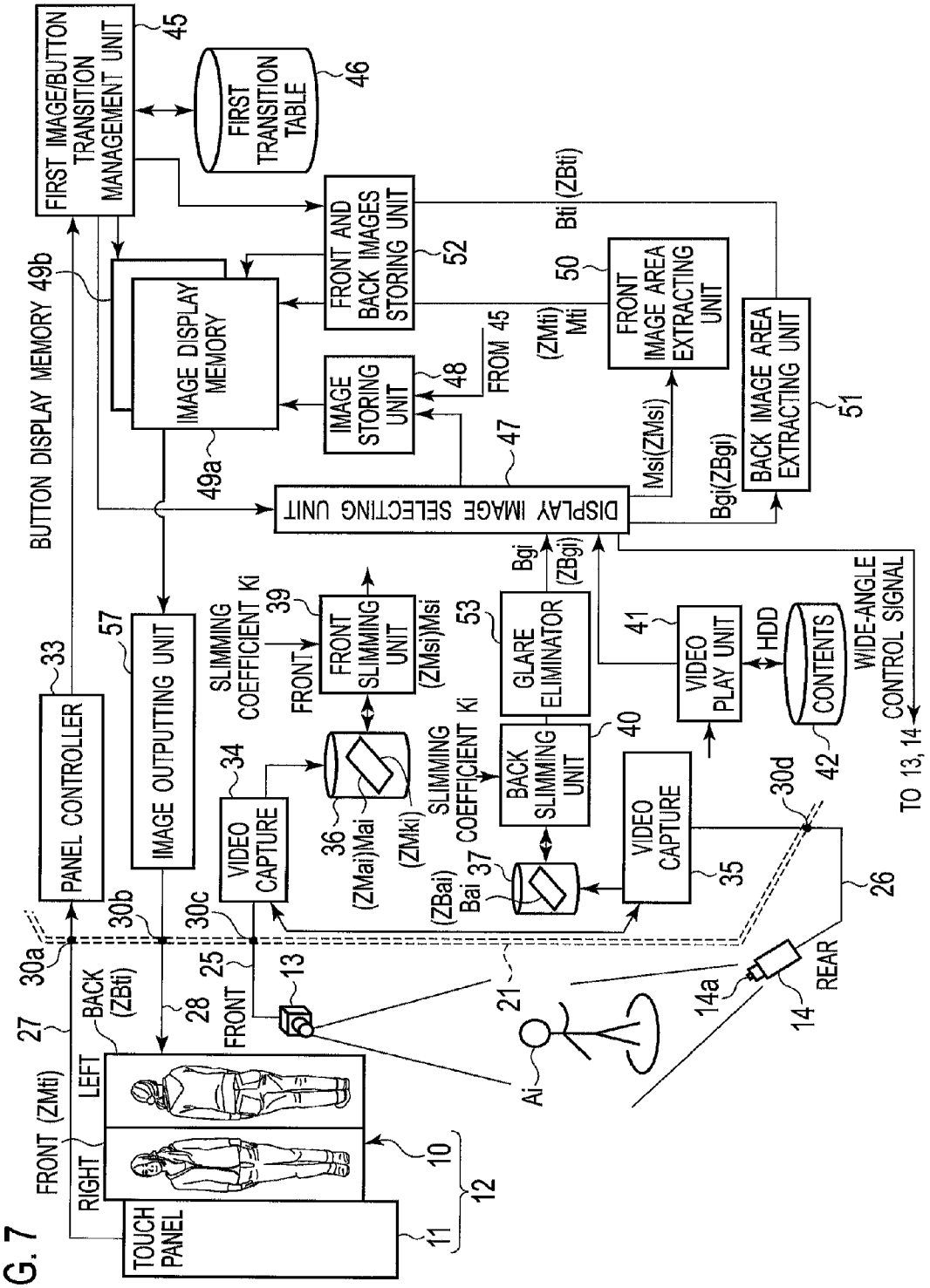
FIG. 7
FIRST IMAGE/BUTTON TRANSITION MANAGEMENT UNIT
45
FIRST TRANSITION TABLE
46
BUTTON DISPLAY MEMORY 49b
IMAGE DISPLAY MEMORY
49a
FRONT AND BACK IMAGES STORING UNIT
52
IMAGE STORING UNIT
48
FROM 45
47
FRONT IMAGE AREA EXTRACTING UNIT
50
BACK IMAGE AREA EXTRACTING UNIT
51
Bti (ZBti)
(ZMti) Mti
Msi(ZMsi)
Bgi(ZBgi)
DISPLAY IMAGE SELECTING UNIT
PANEL CONTROLLER
33
IMAGE OUTPUTTING UNIT
57
SLIMMING COEFFICIENT Ki
FRONT
FRONT SLIMMING UNIT
39
(ZMsi)Msi
GLARE ELIMINATOR
53
Bgi
(ZBgi)
VIDEO PLAY UNIT
41
HDD
CONTENTS
42
WIDE-ANGLE CONTROL SIGNAL
TO 13, 14
VIDEO CAPTURE
34
36
(ZMai)Mai
(ZMki)
SLIMMING COEFFICIENT Ki
BACK SLIMMING UNIT
40
(ZBai)
Bai
37
VIDEO CAPTURE
35
30d
26
30a
30b
30c
25
13
27
BACK (ZBti)
28
FRONT
21
Ai
14a
14
REAR
FRONT (ZMti)
LEFT
RIGHT
10
12
TOUCH PANEL
11

FIG. 8

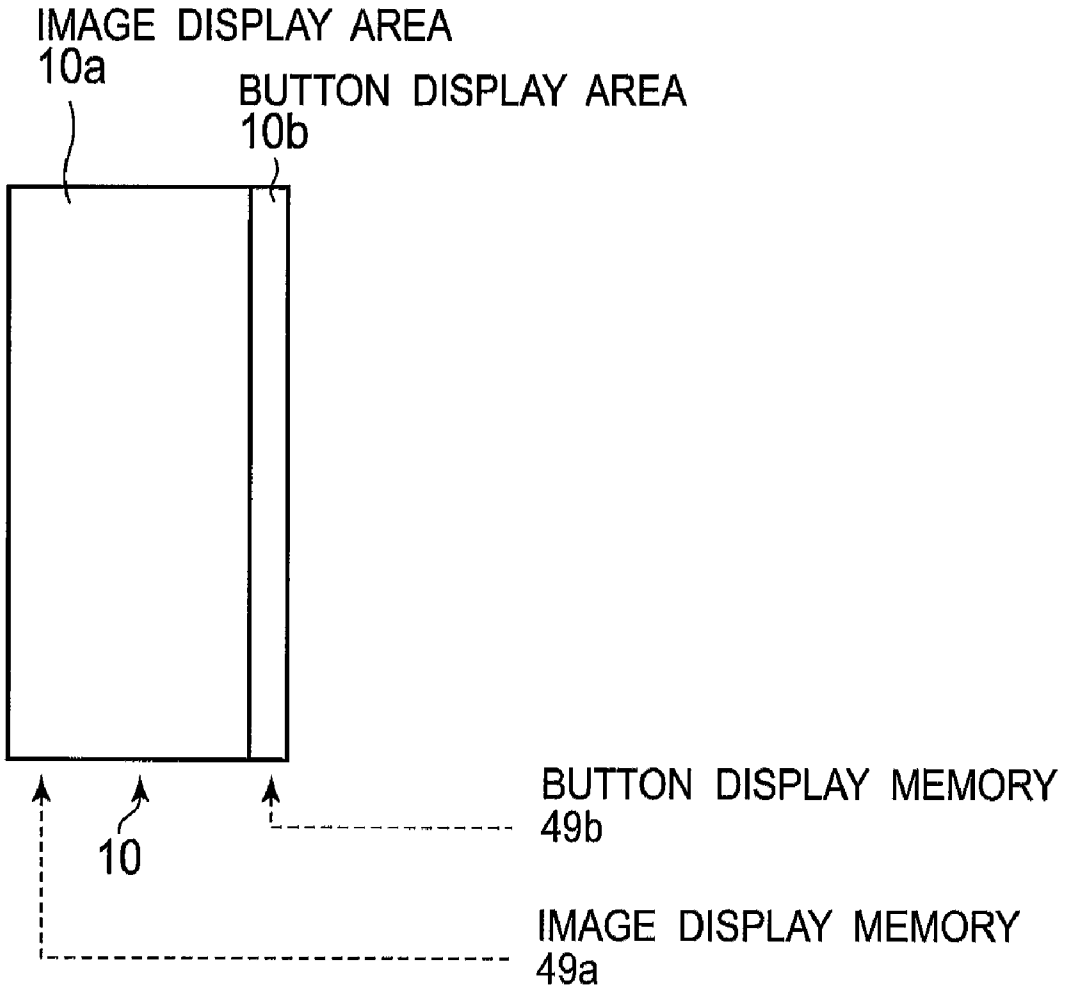
IMAGE DISPLAY AREA
10a
BUTTON DISPLAY AREA
10b
BUTTON DISPLAY MEMORY
49b
10
IMAGE DISPLAY MEMORY
49a

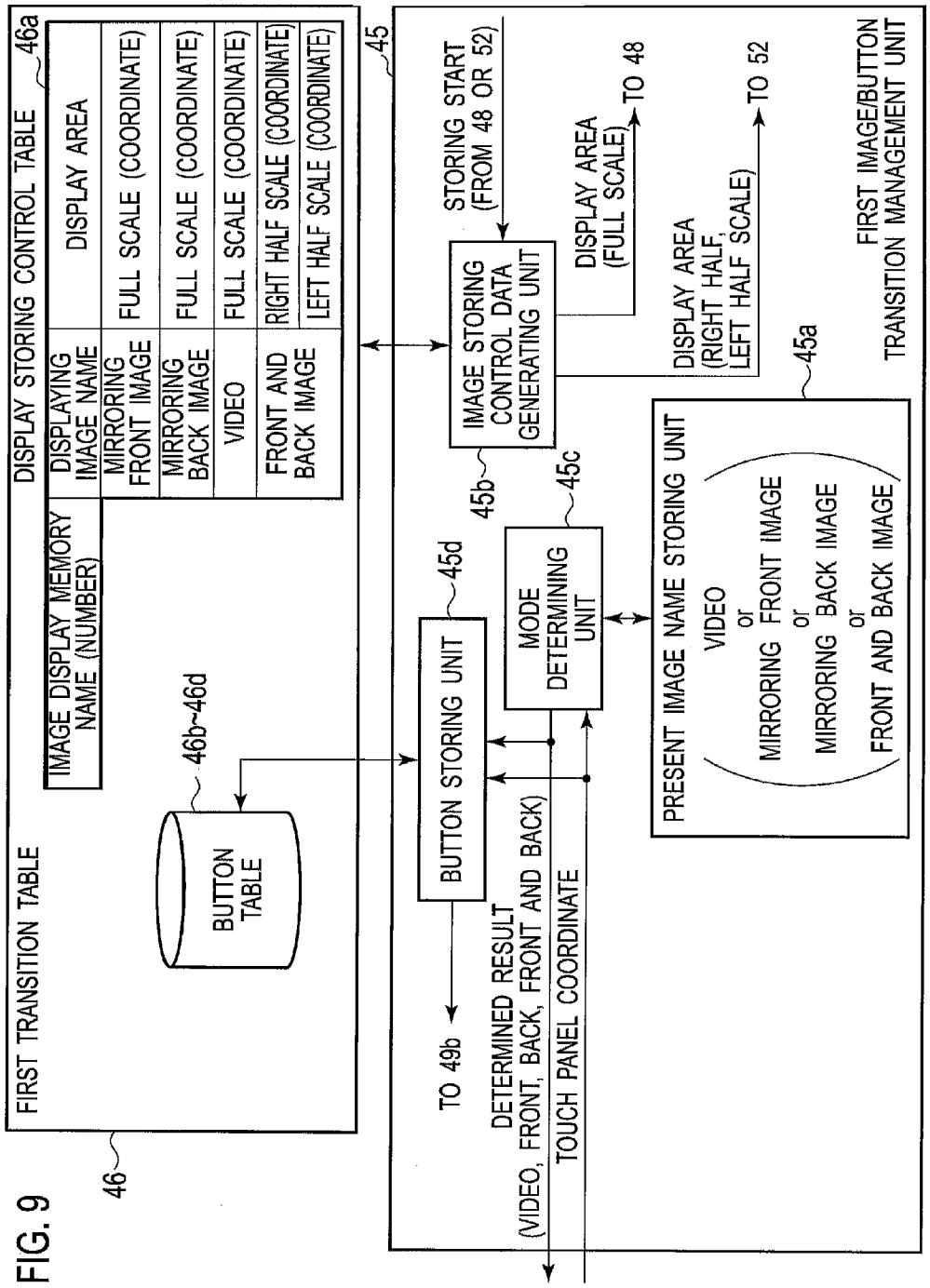
FIG. 9
46
FIRST TRANSITION TABLE
DISPLAY STORING CONTROL TABLE
46a
IMAGE DISPLAY MEMORY NAME (NUMBER)
DISPLAYING IMAGE NAME
DISPLAY AREA
MIRRORING FRONT IMAGE
FULL SCALE (COORDINATE)
MIRRORING BACK IMAGE
FULL SCALE (COORDINATE)
VIDEO
FULL SCALE (COORDINATE)
FRONT AND BACK IMAGE
RIGHT HALF SCALE (COORDINATE)
LEFT HALF SCALE (COORDINATE)
46b~46d
BUTTON TABLE
45
BUTTON STORING UNIT
45d
TO 49b
DETERMINED RESULT (VIDEO, FRONT, BACK, FRONT AND BACK)
TOUCH PANEL COORDINATE
MODE DETERMINING UNIT
45c
IMAGE STORING CONTROL DATA GENERATING UNIT
45b
STORING START (FROM 48 OR 52)
DISPLAY AREA (FULL SCALE)
TO 48
DISPLAY AREA (RIGHT HALF, LEFT HALF SCALE)
TO 52
PRESENT IMAGE NAME STORING UNIT
VIDEO or MIRRORING FRONT IMAGE or MIRRORING BACK IMAGE or FRONT AND BACK IMAGE
45a
FIRST IMAGE/BUTTON TRANSITION MANAGEMENT UNIT

FIG. 10

PRESENT STATE	EVENT	TRANSITION MODE
(1) POWER ON	→	VIDEO MODE
(2) VIDEO MODE	→ TOUCH →	FRONT IMAGE MODE
(3) MIRRORING FRONT IMAGE MODE	→ BACK BUTTON →	BACK IMAGE MODE
(4) MIRRORING FRONT IMAGE MODE	→ FRONT AND BACK BUTTON →	FRONT AND BACK IMAGE MODE
(5) MIRRORING FRONT IMAGE MODE	→ VIDEO BUTTON →	VIDEO MODE
(6) MIRRORING BACK IMAGE MODE	→ VIDEO BUTTON →	VIDEO MODE
(7) MIRRORING BACK IMAGE MODE	→ FRONT BUTTON →	FRONT IMAGE MODE
(8) FRONT AND BACK IMAGE MODE	→ VIDEO BUTTON →	VIDEO MODE
(9) FRONT AND BACK IMAGE MODE	→ FRONT BUTTON →	FRONT IMAGE MODE
(10) FRONT AND BACK IMAGE MODE	→ BACK BUTTON →	BACK IMAGE MODE

FIG. 11

TRANSITION MODE	SELECTING BUTTON TABLE	
VIDEO MODE		
MIRRORING FRONT IMAGE MODE	FRONT IMAGE BUTTON TABLE	46b
MIRRORING BACK IMAGE MODE	BACK IMAGE BUTTON TABLE	46c
FRONT AND BACK IMAGE MODE	FRONT AND BACK IMAGE BUTTON TABLE	46d
VIDEO MODE		
VIDEO MODE		
MIRRORING FRONT IMAGE MODE	FRONT IMAGE BUTTON TABLE	46b
VIDEO MODE		
MIRRORING FRONT IMAGE MODE	FRONT IMAGE BUTTON TABLE	46b
MIRRORING BACK IMAGE MODE	BACK IMAGE BUTTON TABLE	46c

FIG. 12

(a)

FRONT IMAGE BUTTON TABLE 46b

TOUCH PANEL COORDINATE TGi	BUTTON NAME
× × × ×	MIRRORING BACK IMAGE BUTTON
	VIDEO BUTTON
× × × × ×	MIRRORING FRONT AND BACK IMAGES BUTTON

(b)

BACK IMAGE BUTTON TABLE 46c

TOUCH PANEL COORDINATE TGi	BUTTON NAME
× × × ×	MIRRORING FRONT IMAGE BUTTON
	VIDEO BUTTON
× × × × ×	MIRRORING FRONT AND BACK IMAGES BUTTON

(c)

FRONT AND BACK IMAGE BUTTON TABLE 46d

TOUCH PANEL COORDINATE TGi	BUTTON NAME
× × × ×	MIRRORING FRONT IMAGE BUTTON
× × × ×	MIRRORING BACK IMAGE BUTTON
	VIDEO BUTTON

FIG. 13

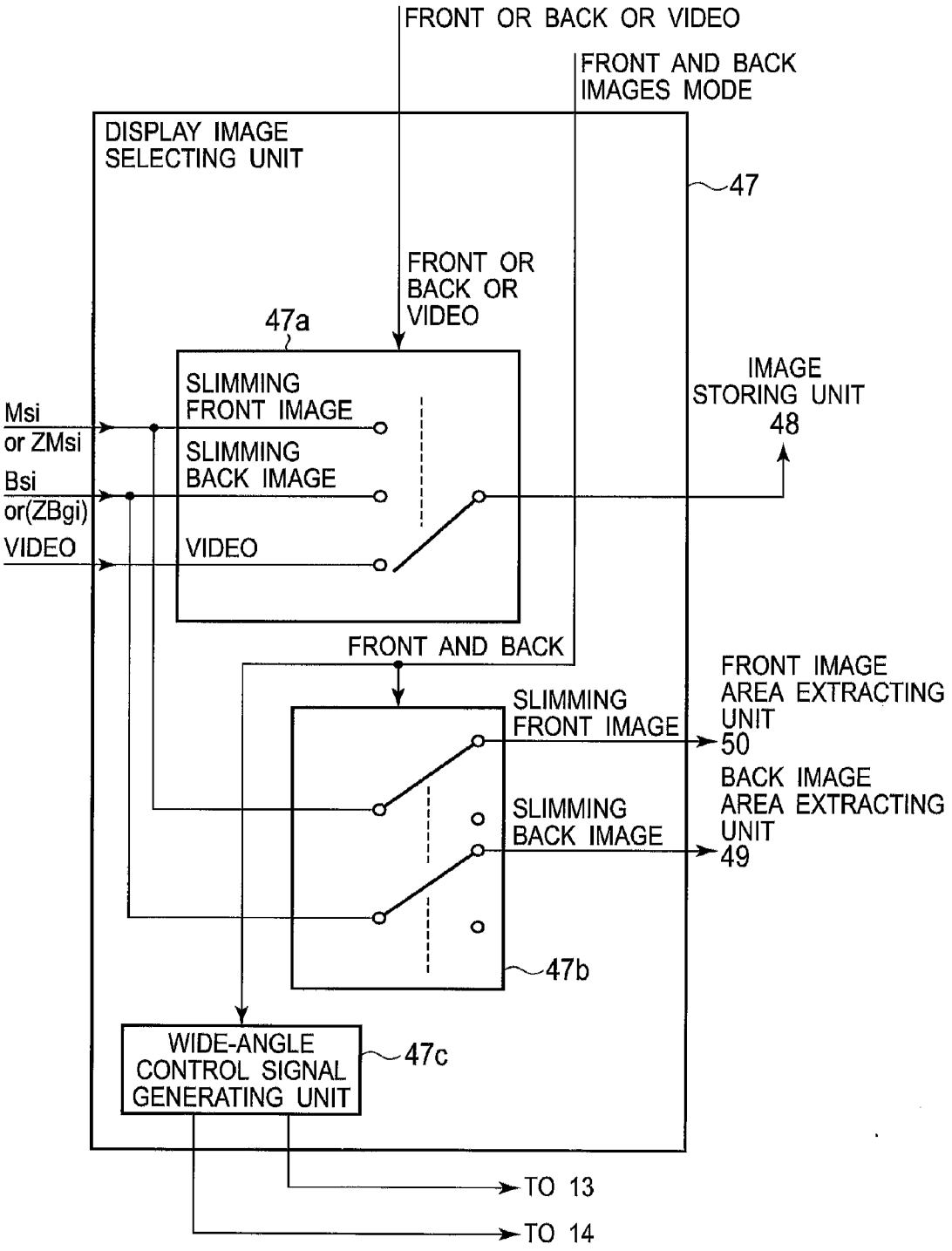
FRONT OR BACK OR VIDEO
FRONT AND BACK IMAGES MODE
DISPLAY IMAGE SELECTING UNIT
47
FRONT OR BACK OR VIDEO
47a
SLIMMING FRONT IMAGE
SLIMMING BACK IMAGE
VIDEO
Msi or ZMsi
Bsi or(ZBgi)
VIDEO
IMAGE STORING UNIT 48
FRONT AND BACK
SLIMMING FRONT IMAGE
SLIMMING BACK IMAGE
FRONT IMAGE AREA EXTRACTING UNIT 50
BACK IMAGE AREA EXTRACTING UNIT 49
47b
WIDE-ANGLE CONTROL SIGNAL GENERATING UNIT
47c
TO 13
TO 14

FIG. 14

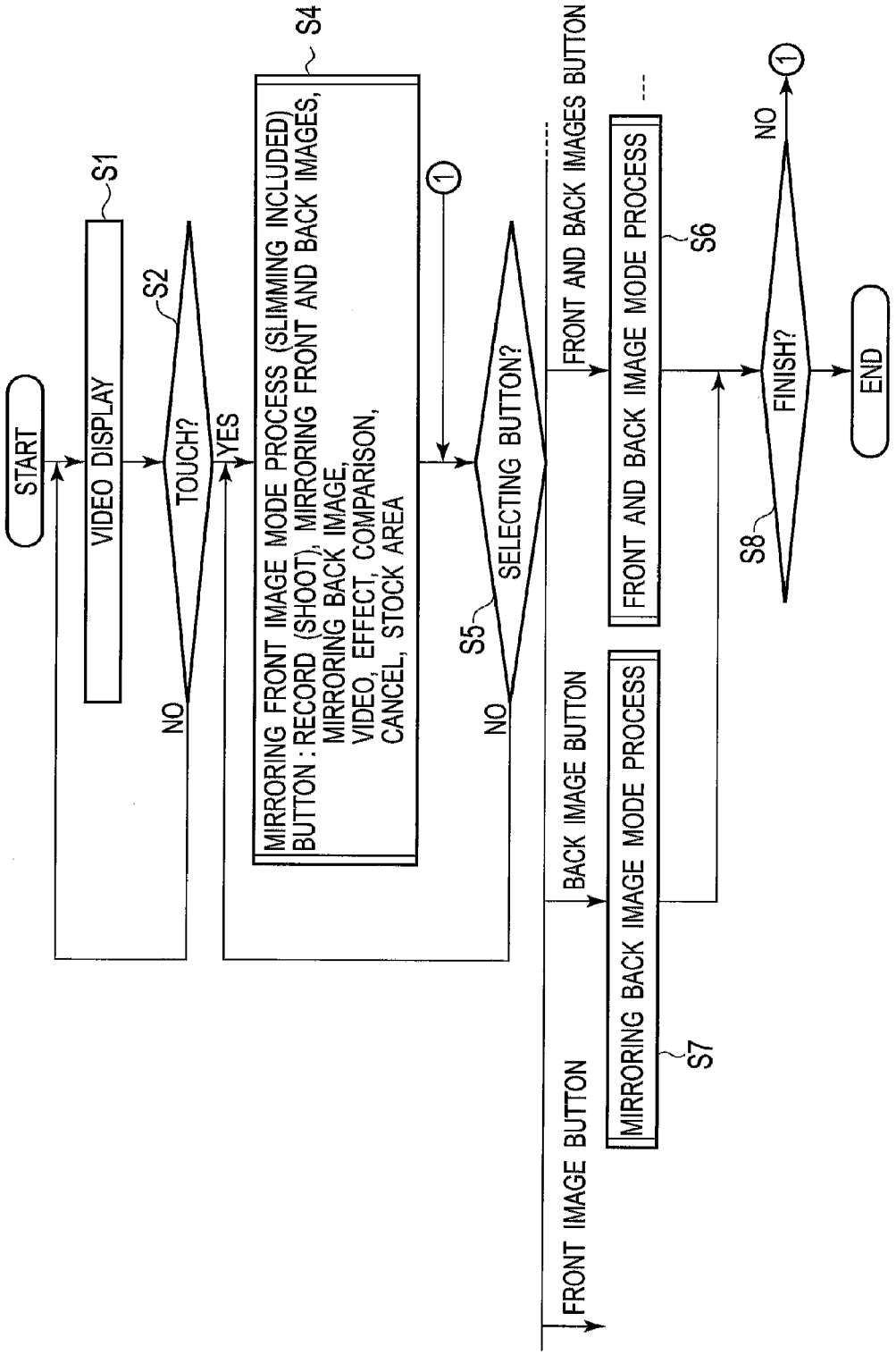
START
VIDEO DISPLAY
S1
TOUCH?
S2
NO
YES
MIRRORING FRONT IMAGE MODE PROCESS (SLIMMING INCLUDED)
BUTTON : RECORD (SHOOT), MIRRORING FRONT AND BACK IMAGES,
MIRRORING BACK IMAGE,
VIDEO, EFFECT, COMPARISON,
CANCEL, STOCK AREA
S4
1
SELECTING BUTTON?
S5
NO
FRONT AND BACK IMAGES BUTTON
BACK IMAGE BUTTON
FRONT IMAGE BUTTON
FRONT AND BACK IMAGE MODE PROCESS
S6
MIRRORING BACK IMAGE MODE PROCESS
S7
FINISH?
S8
NO
1
END

FIG. 15

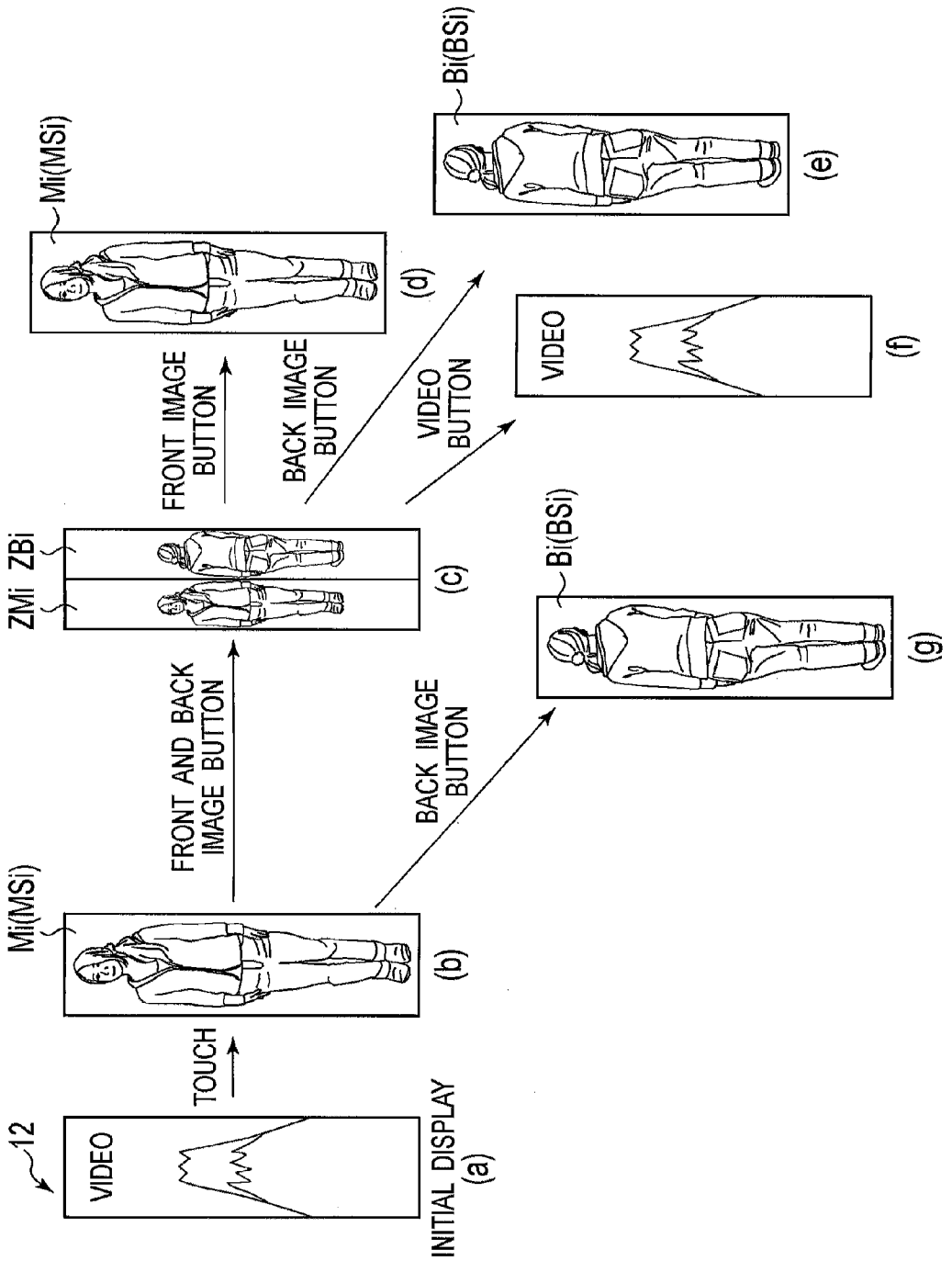
12
VIDEO
INITIAL DISPLAY
(a)
TOUCH
Mi(MSi)
(b)
FRONT AND BACK
IMAGE BUTTON
BACK IMAGE
BUTTON
ZMi
ZBi
(c)
FRONT IMAGE
BUTTON
BACK IMAGE
BUTTON
VIDEO
BUTTON
Mi(MSi)
(d)
Bi(BSi)
(e)
VIDEO
(f)
Bi(BSi)
(g)

FIG. 16

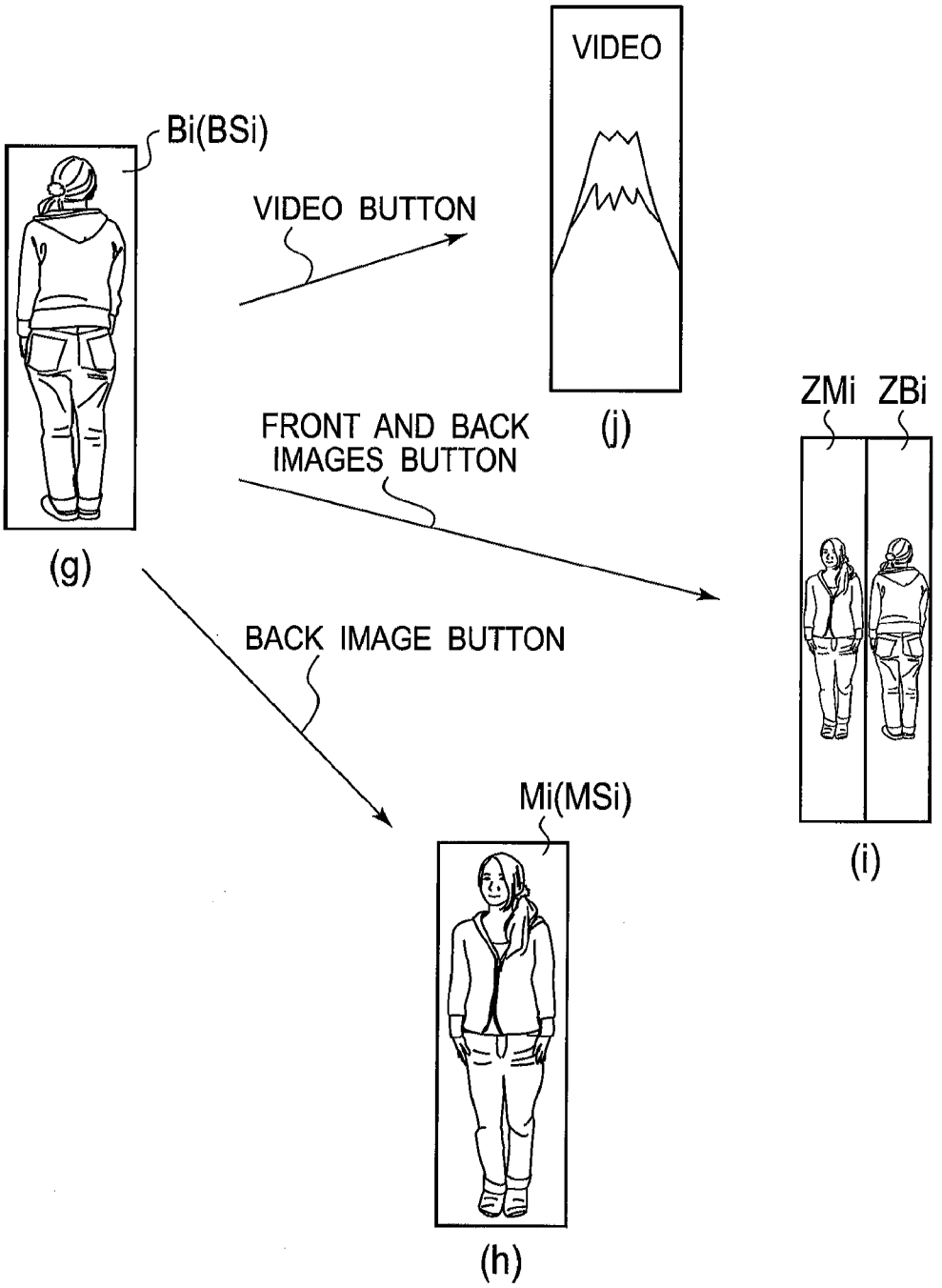
VIDEO
Bi(BSi)
VIDEO BUTTON
(j)
ZMi ZBi
FRONT AND BACK IMAGES BUTTON
(g)
BACK IMAGE BUTTON
Mi(MSi)
(i)
(h)

FIG. 17

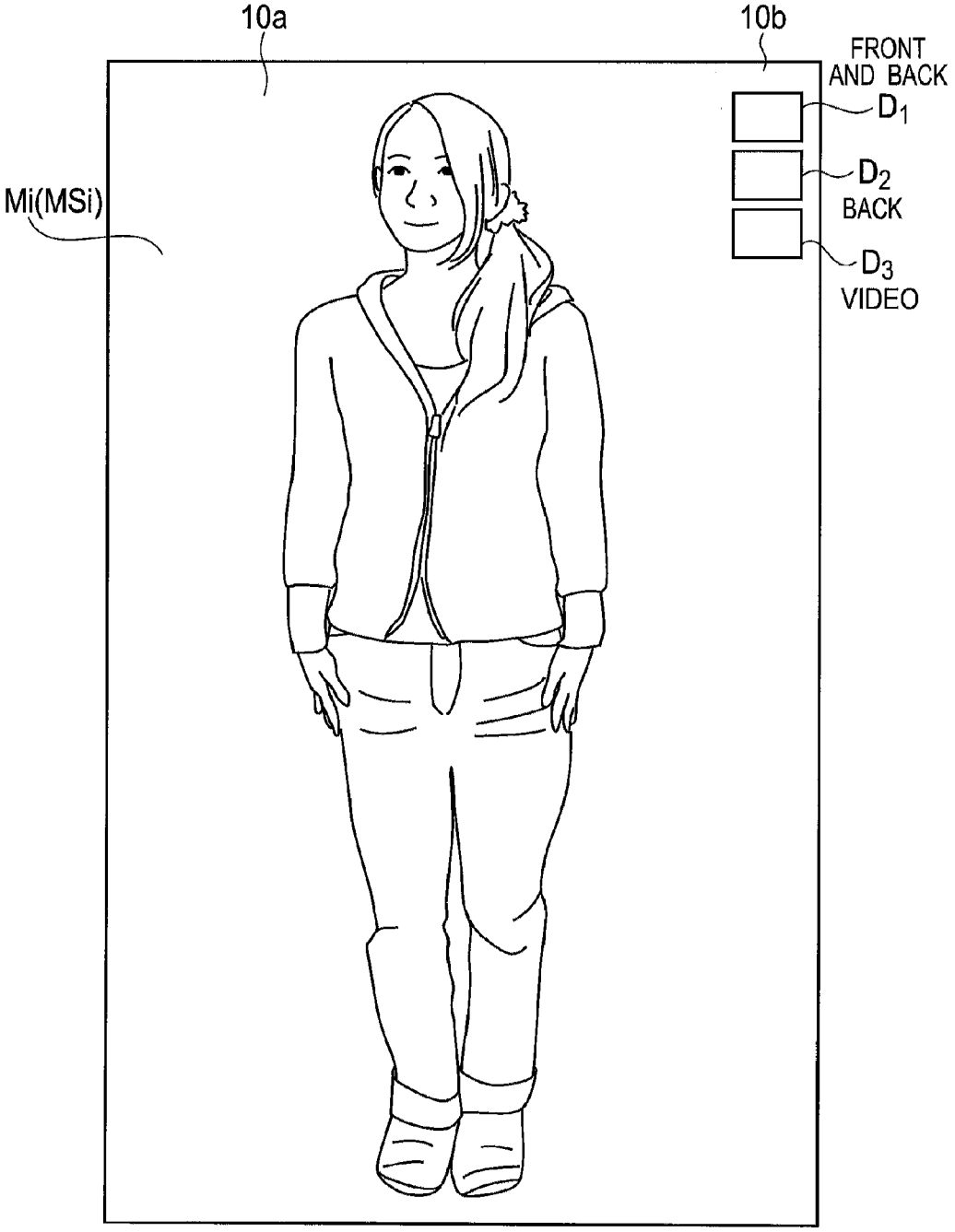

FIG. 18

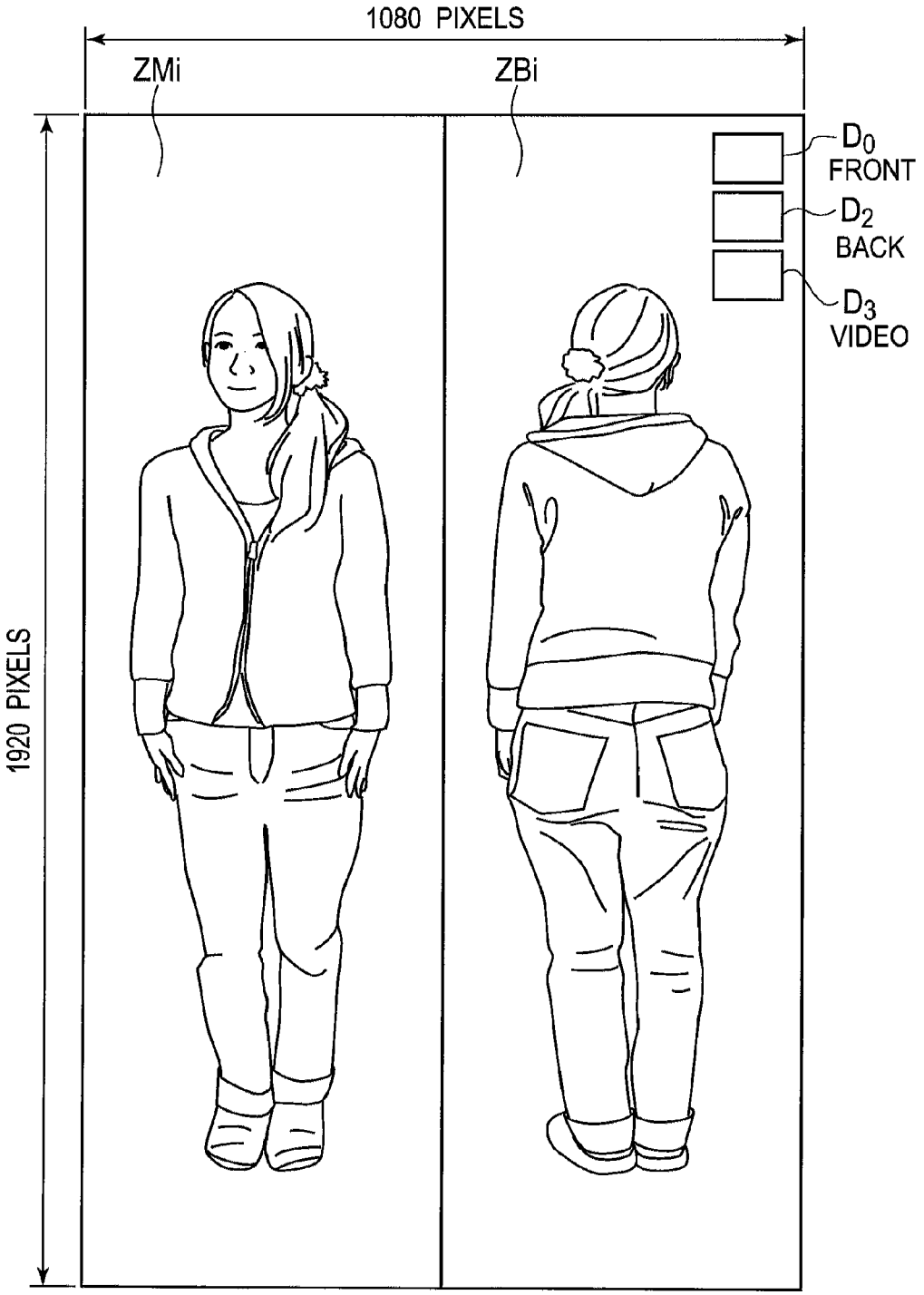

FIG. 19

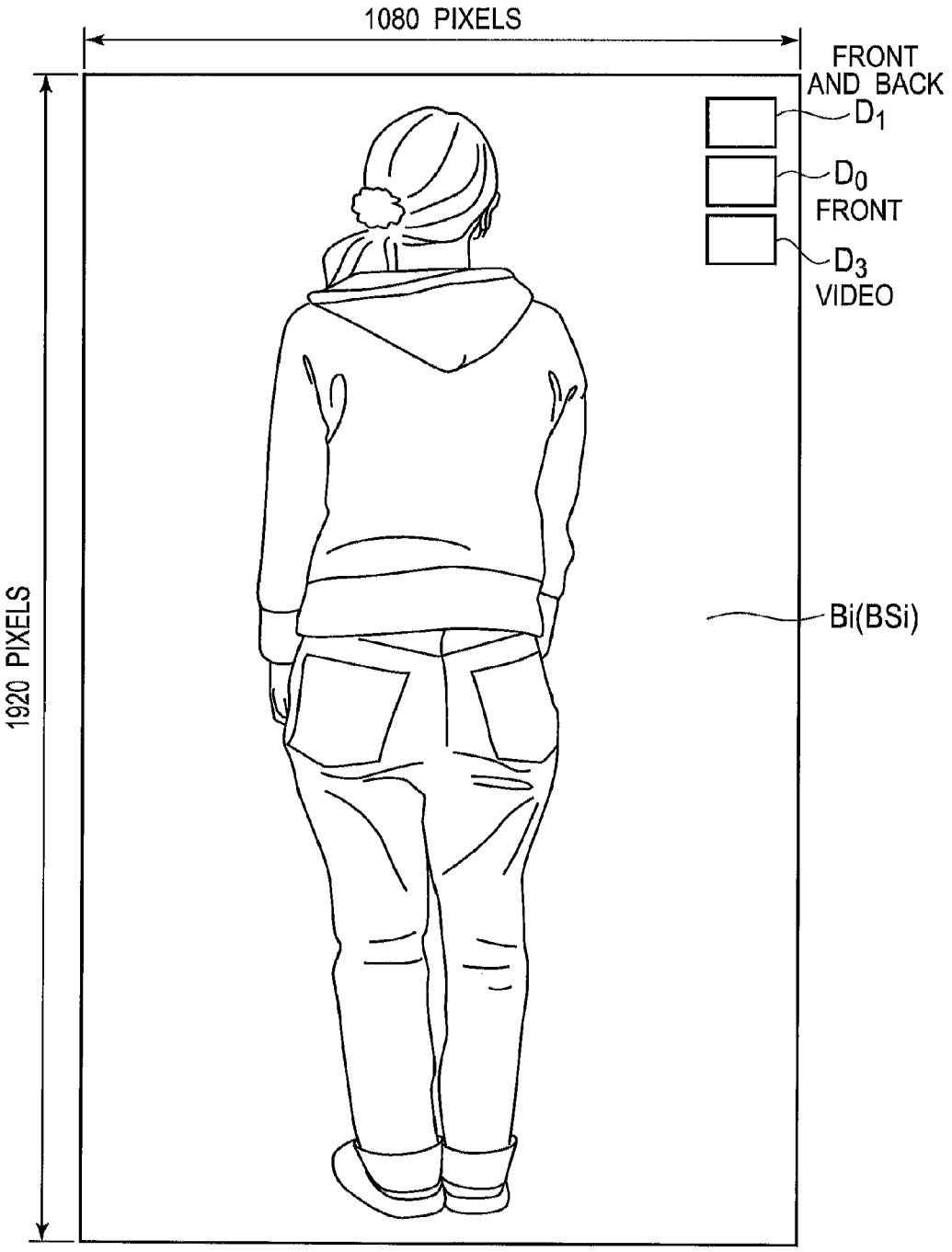
1080 PIXELS
1920 PIXELS
FRONT AND BACK
D1
D0
FRONT
D3
VIDEO
Bi(BSi)

FIG. 20

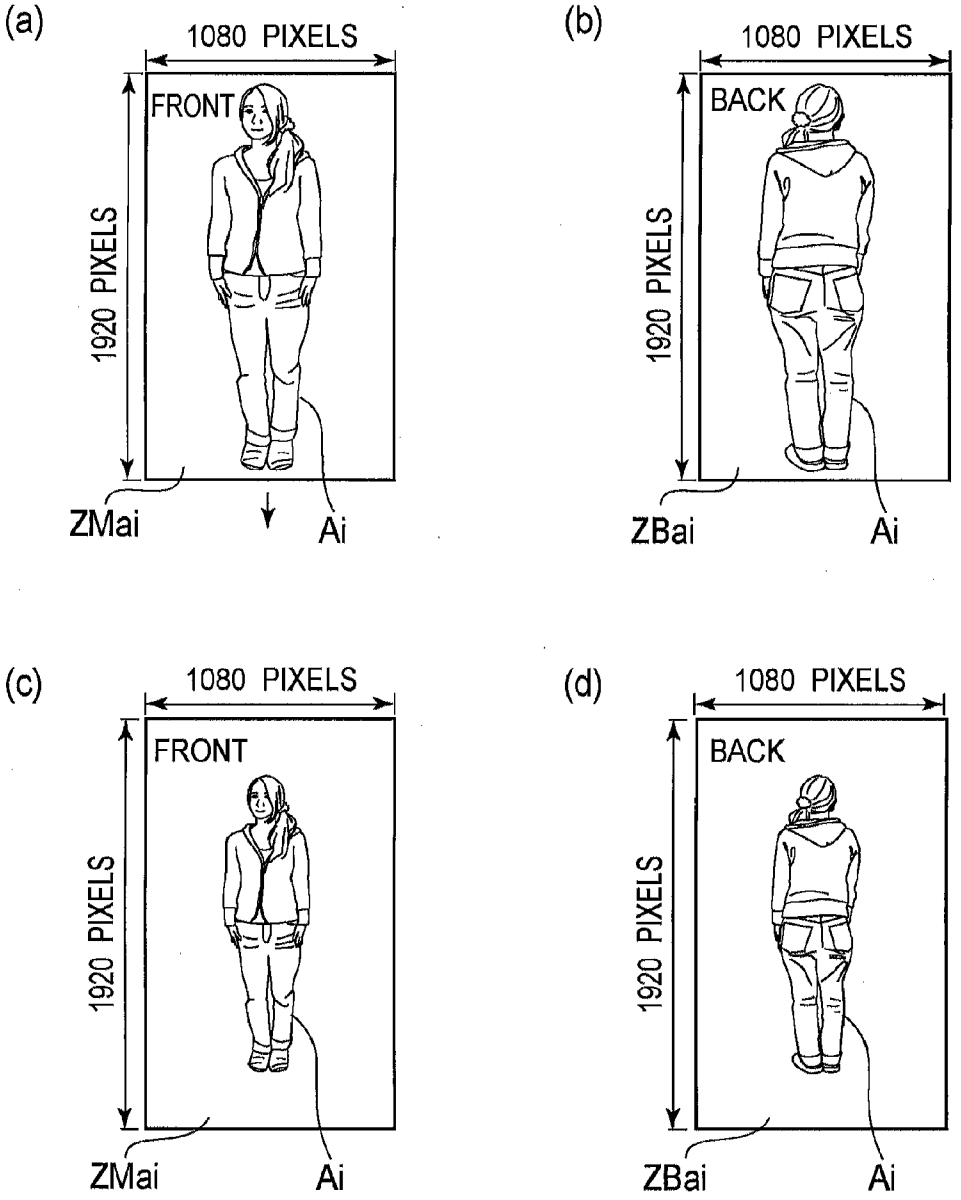
(a)
1080 PIXELS
1920 PIXELS
FRONT
ZMai
Ai
(b)
1080 PIXELS
1920 PIXELS
BACK
ZBai
Ai
(c)
1080 PIXELS
1920 PIXELS
FRONT
ZMai
Ai
(d)
1080 PIXELS
1920 PIXELS
BACK
ZBai
Ai

FIG. 21

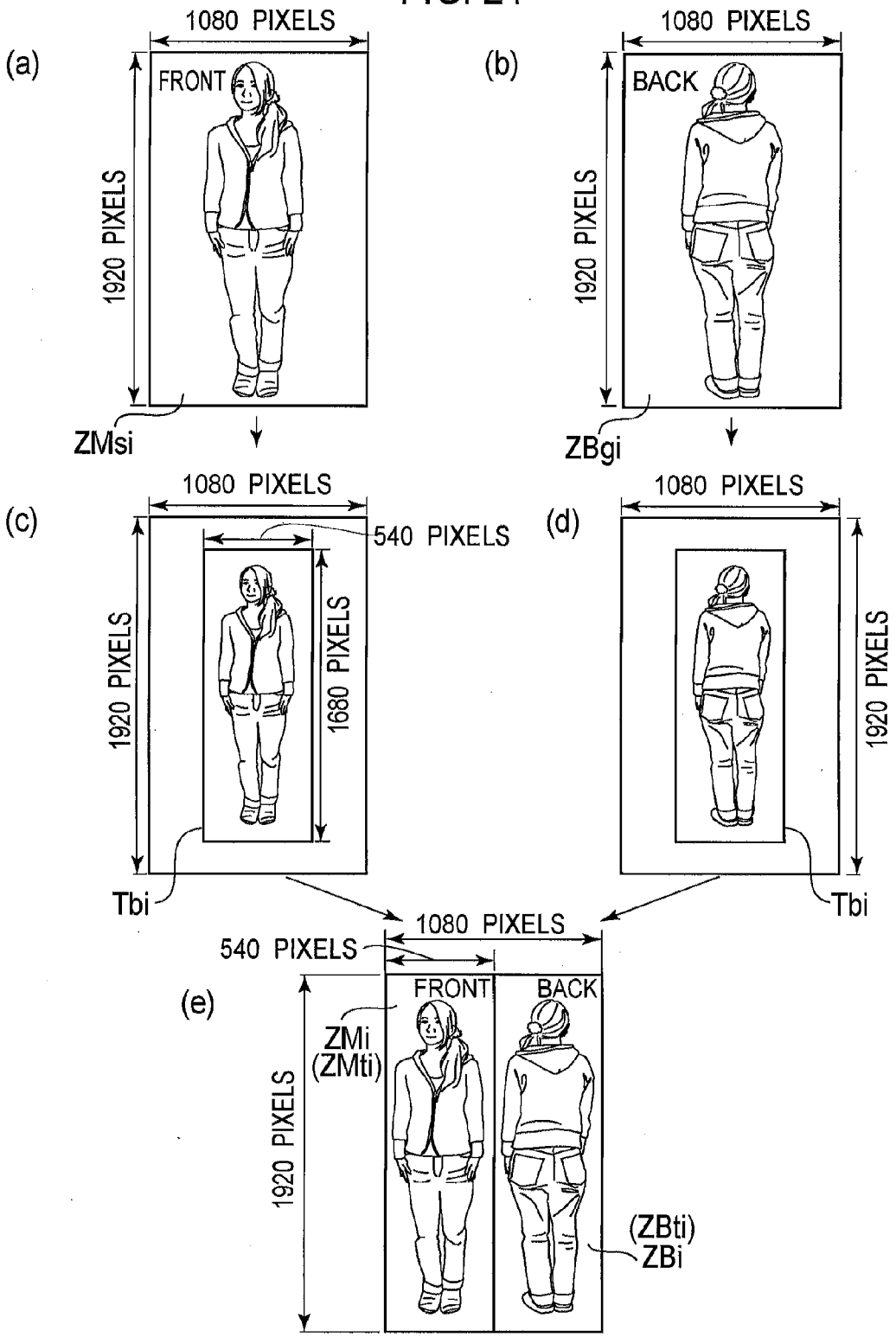
(a)
1080 PIXELS
1920 PIXELS
FRONT
ZMsi
(b)
1080 PIXELS
1920 PIXELS
BACK
ZBgi
(c)
1080 PIXELS
540 PIXELS
1920 PIXELS
1680 PIXELS
Tbi
(d)
1080 PIXELS
1920 PIXELS
Tbi
(e)
1080 PIXELS
540 PIXELS
FRONT
BACK
ZMi
(ZMti)
1920 PIXELS
(ZBti)
ZBi

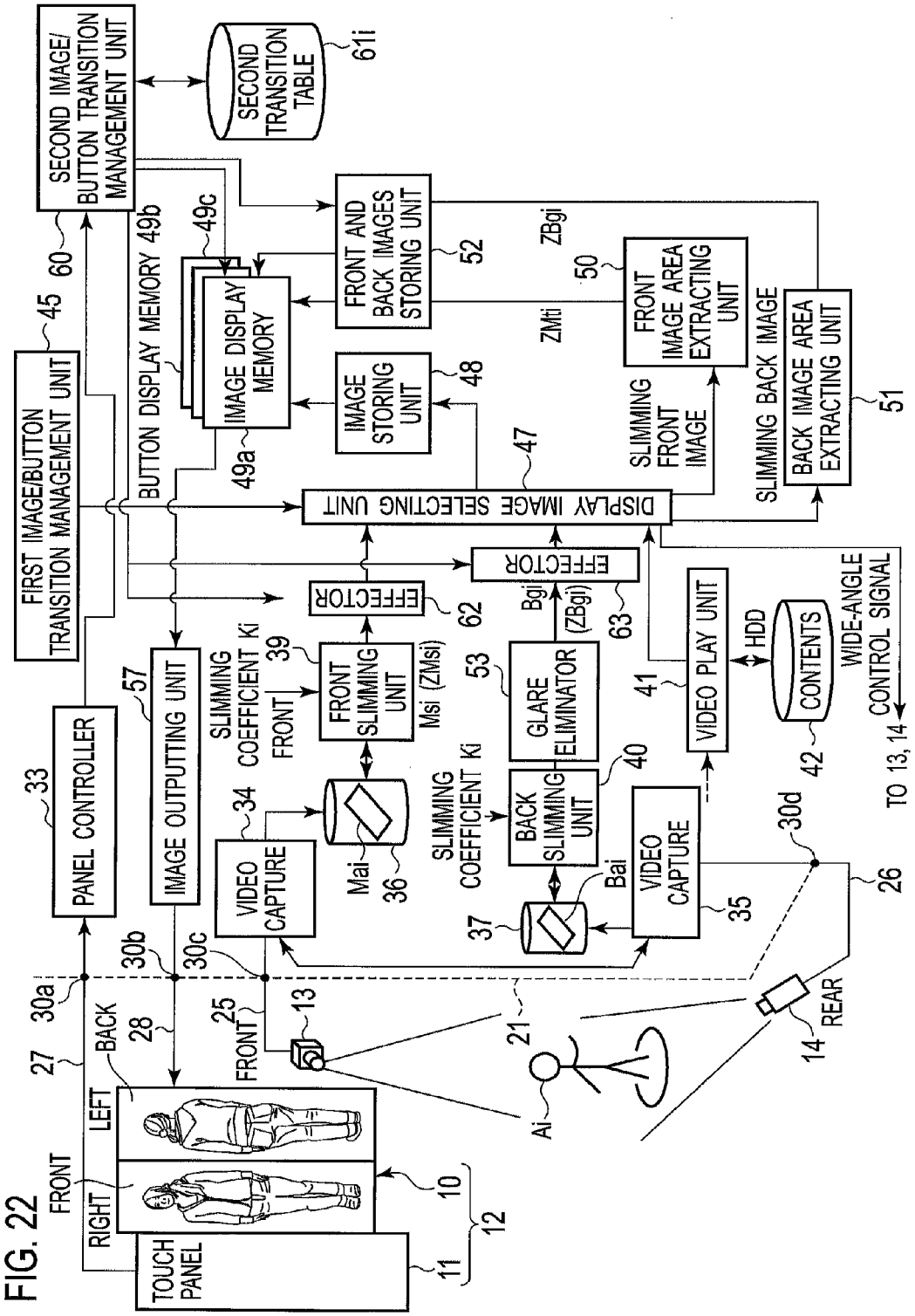
SECOND IMAGE/ BUTTON TRANSITION MANAGEMENT UNIT
SECOND TRANSITION TABLE
61i
60
45
FIRST IMAGE/BUTTON TRANSITION MANAGEMENT UNIT
BUTTON DISPLAY MEMORY 49b
49c
49a
IMAGE DISPLAY MEMORY
FRONT AND BACK IMAGES STORING UNIT
52
ZBgi
ZMti
50
FRONT IMAGE AREA EXTRACTING UNIT
IMAGE STORING UNIT
48
47
SLIMMING FRONT IMAGE
SLIMMING BACK IMAGE
BACK IMAGE AREA EXTRACTING UNIT
51
DISPLAY IMAGE SELECTING UNIT
EFFECTOR
62
EFFECTOR
63
Bgi
(ZBgi)
PANEL CONTROLLER
33
IMAGE OUTPUTTING UNIT
57
SLIMMING COEFFICIENT Ki
FRONT
39
FRONT SLIMMING UNIT
Msi (ZMsi)
53
GLARE ELIMINATOR
41
VIDEO PLAY UNIT
HDD
CONTENTS
42
WIDE-ANGLE CONTROL SIGNAL
TO 13, 14
34
VIDEO CAPTURE
Mai
36
SLIMMING COEFFICIENT Ki
BACK SLIMMING UNIT
40
Bai
37
VIDEO CAPTURE
35
30d
26
30a
30b
30c
27
BACK
28
25
FRONT
13
21
Ai
14
REAR
FRONT
LEFT
RIGHT
10
12
11
TOUCH PANEL

FIG. 22

FIG. 23

(a)

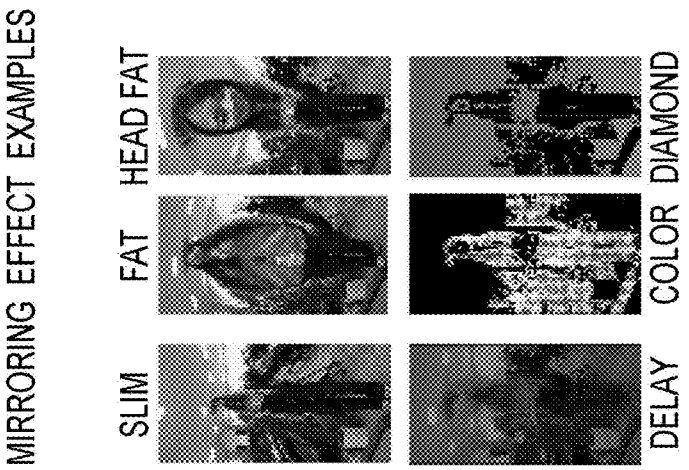
MIRRORING EFFECT EXAMPLES
SLIM
FAT
HEAD FAT
DELAY
COLOR
DIAMOND

(b)

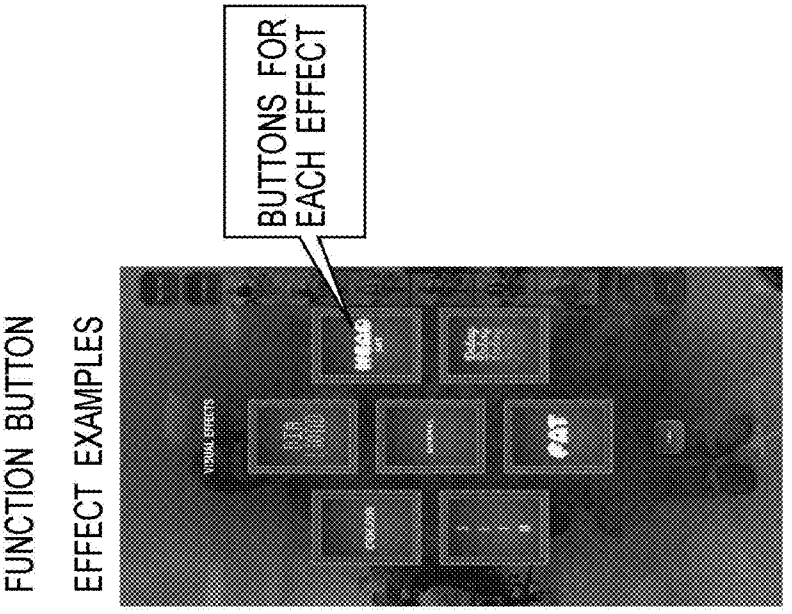
FUNCTION BUTTON
EFFECT EXAMPLES
BUTTONS FOR EACH EFFECT

FIG. 24

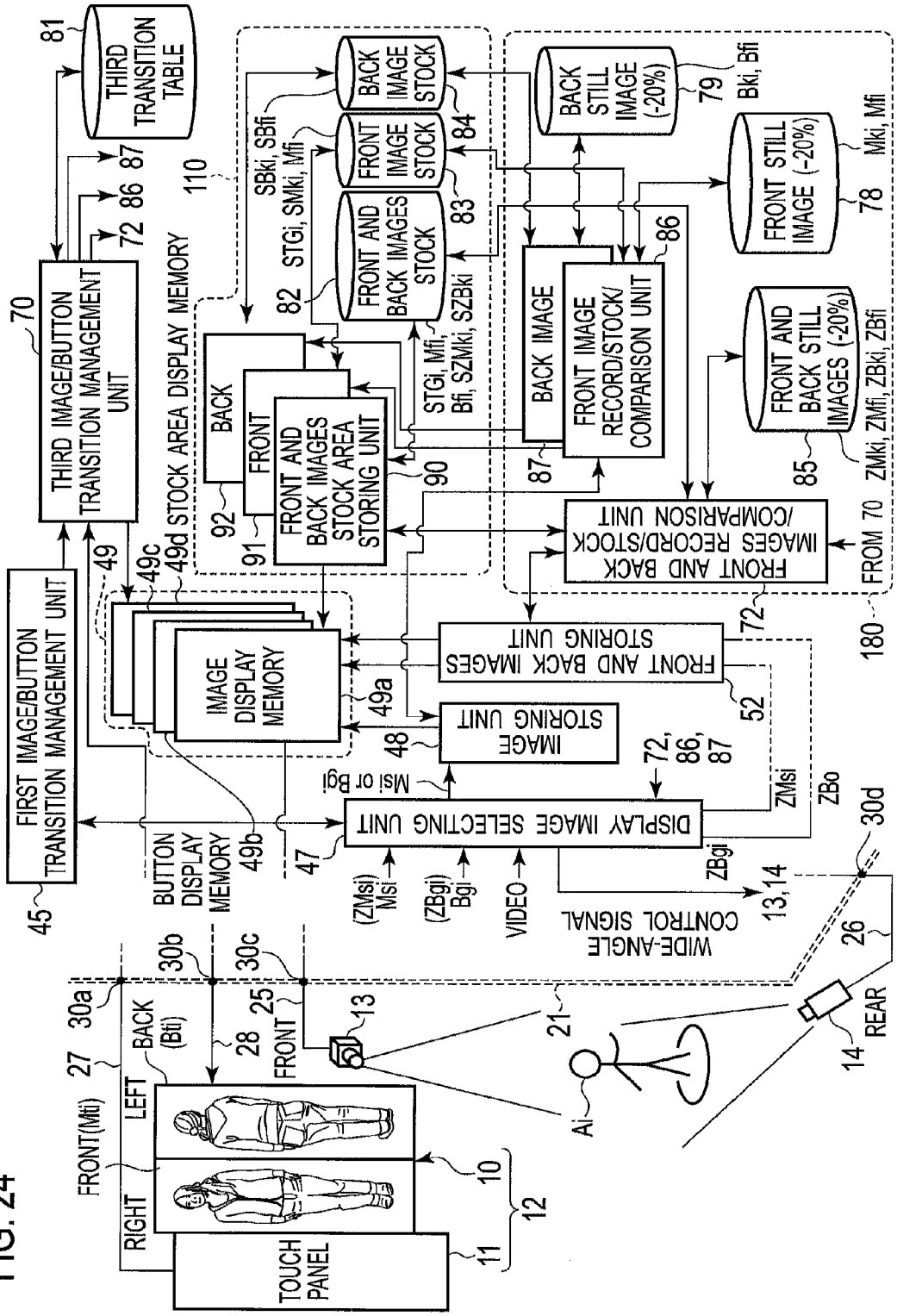
THIRD TRANSITION TABLE
THIRD IMAGE/BUTTON TRANSITION MANAGEMENT UNIT
FIRST IMAGE/BUTTON TRANSITION MANAGEMENT UNIT
STOCK AREA DISPLAY MEMORY
BACK
FRONT
FRONT AND BACK IMAGES STOCK AREA STORING UNIT
FRONT AND BACK IMAGES STOCK
FRONT IMAGE STOCK
BACK IMAGE STOCK
BACK STILL IMAGE (-20%)
FRONT STILL IMAGE (-20%)
FRONT AND BACK STILL IMAGES (-20%)
BACK IMAGE
FRONT IMAGE RECORD/STOCK/ COMPARISON UNIT
FRONT AND BACK IMAGES RECORD/STOCK /COMPARISON UNIT
FROM 70
FRONT AND BACK IMAGES STORING UNIT
IMAGE STORING UNIT
IMAGE DISPLAY MEMORY
BUTTON DISPLAY MEMORY
DISPLAY IMAGE SELECTING UNIT
WIDE-ANGLE CONTROL SIGNAL
VIDEO
TOUCH PANEL
FRONT(Mfi)
RIGHT
LEFT
BACK (Bfi)
FRONT
REAR
Ai

FIG. 25

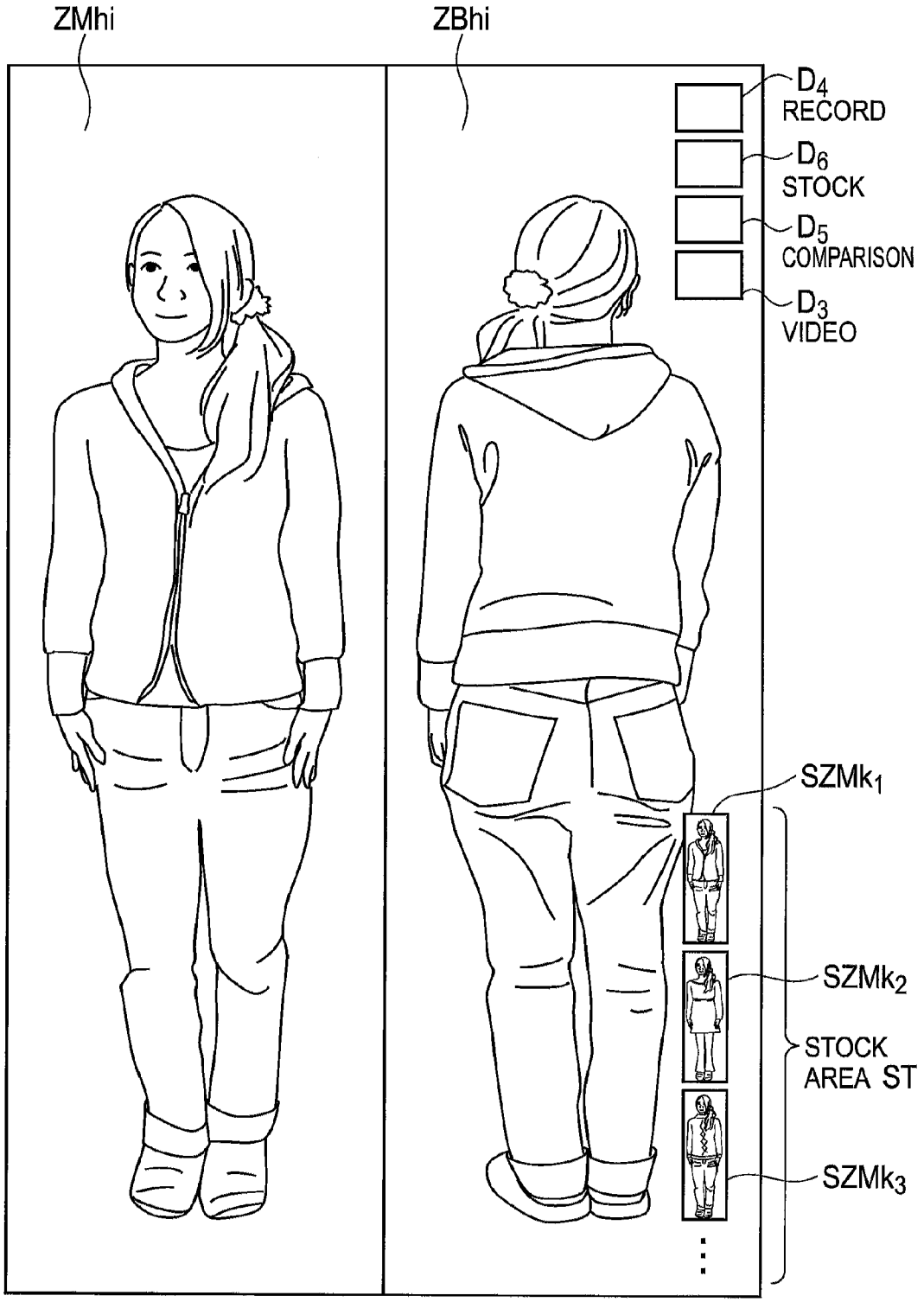
ZMhi
ZBhi
D4
RECORD
D6
STOCK
D5
COMPARISON
D3
VIDEO
SZMk1
SZMk2
STOCK
AREA ST
SZMk3

FIG. 26

(a)

THIRD FRONT IMAGE BUTTON TABLE

81a

TOUCH PANEL COORDINATE Gi(X, Y)	BUTTON NAME	START
× × ×	FRONT AND BACK IMAGES BUTTON	FRONT IMAGE RECORD/ STOCK/COMPARISON UNIT 86
× × × ×	BACK IMAGE BUTTON	
× ×	VIDEO BUTTON	
× × × × ×	COMPARISON BUTTON	
× △ × ×	SAVE BUTTON	
× × × △	RECORD BUTTON	
× △ ×	CANCEL BUTTON	
	STOCK	
	THUMBNAIL	

(b)

THIRD BACK IMAGE BUTTON TABLE

TOUCH PANEL COORDINATE Gi(X, Y)	BUTTON NAME
× × ×	FRONT AND BACK IMAGES BUTTON
× × × ×	FRONT IMAGE BUTTON
× ×	VIDEO BUTTON
× × × × ×	COMPARISON BUTTON
× △ × ×	SAVE BUTTON
× × × △	RECORD BUTTON
× △ ×	CANCEL BUTTON
	STOCK
	THUMBNAIL

81b

71b

FIG. 27

(a)

THIRD FRONT AND BACK IMAGES BUTTON TABLE

81c

TOUCH PANEL COORDINATE Gi(X, Y)	BUTTON NAME	START
× × ×	FRONT IMAGE BUTTON	FRONT AND BACK IMAGES RECORD/STOCK/COMPARISON UNIT 72
× × × ×	BACK IMAGE BUTTON	
× ×	VIDEO BUTTON	
× × × × ×	COMPARISON BUTTON	
× △ × ×	SAVE BUTTON	
× × × △	RECORD BUTTON	
× △ ×	CANCEL BUTTON	
	STOCK	

(b)

SIMULTANEOUS COMPARISON BUTTON TABLE

81d

TOUCH PANEL COORDINATE	BUTTON NAME
	FRONT AND BACK IMAGES COMPARISON
	FRONT IMAGE COMPARISON
	BACK IMAGE COMPARISON

⋮

FIG. 28

(a) FRONT AND BACK IMAGES MODE

TOUCH PANEL COORDINATE	EVENT (BUTTON NAME)		MODE
× × ×	RECORD BUTTON	→	SIMULTANEOUS FRONT AND BACK RECORD MODE (FRONT AND BACK)
× × ×	VIDEO BUTTON	→	VIDEO MODE
× × ×	STOCK BUTTON	→	SIMULTANEOUS STOCK MODE (FRONT AND BACK)
× × ×	SIMULTANEOUS COMPARISON BUTTON	→	COMPARING DISPLAY FOR BOTH IMAGES OF STOCK AREA (SIMULTANEOUS COMPARISON MODE)

⋮

(b) SIMULTANEOUS RECORD MODE

BUTTON NAME	BUTTON TABLE NAME	START
RECORD BUTTON →	THIRD FRONT AND BACK IMAGES BUTTON TABLE 81c →	FRONT AND BACK IMAGES STILLING UNIT

(c) SIMULTANEOUS STOCK MODE

BUTTON NAME	BUTTON TABLE NAME	START
STOCK →	81c →	SIMULTANEOUS FRONT AND BACK IMAGES STOCK UNIT

(d) SIMULTANEOUS COMPARISON MODE

BUTTON NAME	BUTTON TABLE NAME	START
SIMULTANEOUS COMPARISON →	SIMULTANEOUS COMPARISON BUTTON TABLE →	FRONT AND BACK IMAGES COMPARISON UNIT

FIG. 29

(a) FRONT IMAGE RECORD MODE

BUTTON NAME	BUTTON TABLE NAME	START
RECORD →	THIRD FRONT IMAGE BUTTON TABLE 81a →	FRONT IMAGE STILLING UNIT

(b) BACK IMAGE RECORD MODE

BUTTON NAME	BUTTON TABLE NAME	START
RECORD →	THIRD BACK IMAGE BUTTON TABLE 81b →	BACK IMAGE STILLING UNIT

(c) FRONT IMAGE STOCK MODE

BUTTON NAME	BUTTON TABLE NAME	START
FRONT STOCK →	81c →	FRONT IMAGE STOCK UNIT

(d) BACK IMAGE STOCK MODE

BUTTON NAME	BUTTON TABLE NAME	START
STOCK →	81b →	BACK IMAGE STOCK UNIT

(e) FRONT IMAGE COMPARISON MODE

BUTTON NAME	BUTTON TABLE NAME	START
COMPARISON →	81a →	FRONT IMAGE COMPARISON UNIT

(f) BACK IMAGE COMPARISON MODE

BUTTON NAME	BUTTON TABLE NAME	START
COMPARISON →	81b →	BACK IMAGE COMPARISON UNIT

FIG. 30

(a)

82

FRONT AND BACK IMAGES STOCK MEMORY

STOCK FILE NUMBER STfi	STOCK COORDINATE STGi	STOCK NUMBER Sgi	FRONT IMAGE FILE NUMBER Mfi	FRONT STOCK IMAGE	BACK IMAGE FILE NUMBER Bfi	BACK STOCK IMAGE
○○○	× × ×	"	×△×	$SZMk_1$	△×△	$SZBk_1$
○×○	× × ×	"	×○×	$SZMk_2$	○△×	$SZBk_2$
⋮	⋮	⋮	⋮	⋮	⋮	⋮

UPDATE

(b)

83

FRONT IMAGES STOCK MEMORY

STOCK FILE NUMBER SFi	Sgi	MEMORY DISPLAY AREA COORDINATE STGi	FRONT IMAGE FILE NUMBER Mf	FRONT STOCK IMAGE
○○○○		× × ×	× × ×	SMk_1
○××○		× × ×	× × × ×	SMk_2
⋮		⋮	⋮	⋮

UPDATE

(c)

84

BACK IMAGES STOCK MEMORY

STOCK FILE NUMBER SFi	Sgi	MEMORY DISPLAY AREA COORDINATE STGi	BACK IMAGE FILE NUMBER Bfi	BACK STOCK IMAGE SBki
○×○○		× × ×	× × × × ×	SBk_1
△××××		× × ×	× × × × × ×	SBk_2
⋮		⋮	⋮	⋮

UPDATE

FIG. 31

(a)

FRONT AND BACK STILL IMAGES MEMORY 85

FRONT STILL IMAGE ZMhi FILE NUMBER Mfi	IMAGE	BACK STILL IMAGE FILE NUMBER Bfi	IMAGE
×△×	FRONT STILL IMAGE ZMk_1	△×△	BACK STILL IMAGE ZBk_1
×○×	FRONT STILL IMAGE ZMk_2	○△×	FRONT STILL IMAGE ZBk_2
⋮	⋮	⋮	⋮

(b)

FRONT STILL IMAGES MEMORY 78

FRONT STILL IMAGE Mki FILE NUMBER Mfi	IMAGE
×××	FRONT STILL IMAGE Mk_1
××××	FRONT STILL IMAGE Mk_2
⋮	⋮

(c)

BACK STILL IMAGES MEMORY 79

BACK STILL IMAGE Bki FILE NUMBER Bfi	IMAGE
×××××	BACK STILL IMAGE Bk_1
××××××	BACK STILL IMAGE Bk_2
⋮	⋮

FIG. 32

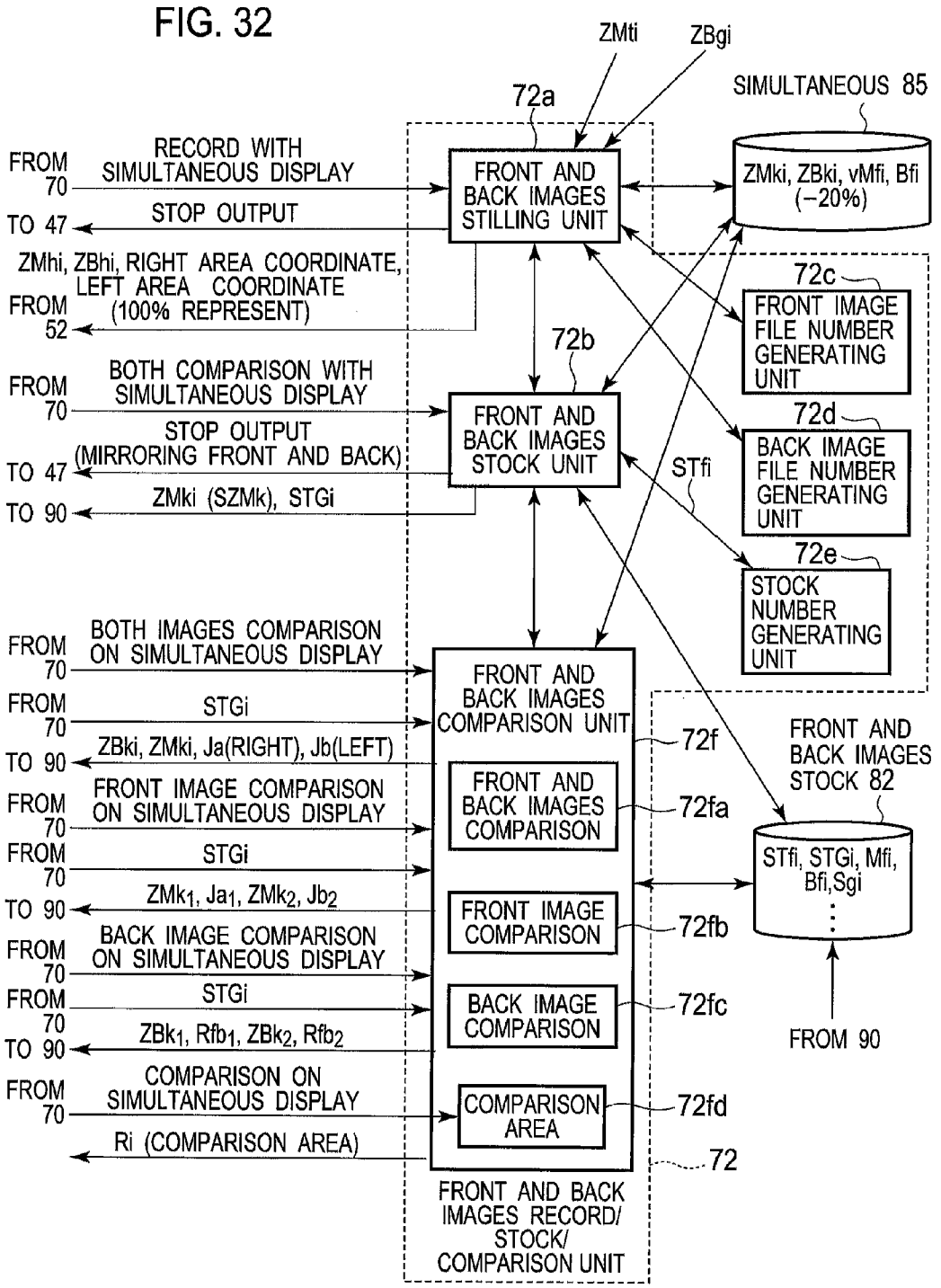
ZMti
ZBgi
72a
SIMULTANEOUS 85
FROM 70
RECORD WITH SIMULTANEOUS DISPLAY
TO 47
STOP OUTPUT
FRONT AND BACK IMAGES STILLING UNIT
ZMki, ZBki, vMfi, Bfi (−20%)
ZMhi, ZBhi, RIGHT AREA COORDINATE, LEFT AREA COORDINATE (100% REPRESENT)
FROM 52
72c
FRONT IMAGE FILE NUMBER GENERATING UNIT
72b
FROM 70
BOTH COMPARISON WITH SIMULTANEOUS DISPLAY
TO 47
STOP OUTPUT (MIRRORING FRONT AND BACK)
TO 90
ZMki (SZMk), STGi
FRONT AND BACK IMAGES STOCK UNIT
STfi
72d
BACK IMAGE FILE NUMBER GENERATING UNIT
72e
STOCK NUMBER GENERATING UNIT
FROM 70
BOTH IMAGES COMPARISON ON SIMULTANEOUS DISPLAY
FROM 70
STGi
TO 90
ZBki, ZMki, Ja(RIGHT), Jb(LEFT)
FROM 70
FRONT IMAGE COMPARISON ON SIMULTANEOUS DISPLAY
FROM 70
STGi
TO 90
ZMk1, Ja1, ZMk2, Jb2
FROM 70
BACK IMAGE COMPARISON ON SIMULTANEOUS DISPLAY
FROM 70
STGi
TO 90
ZBk1, Rfb1, ZBk2, Rfb2
FROM 70
COMPARISON ON SIMULTANEOUS DISPLAY
Ri (COMPARISON AREA)
FRONT AND BACK IMAGES COMPARISON UNIT
72f
FRONT AND BACK IMAGES COMPARISON
72fa
FRONT IMAGE COMPARISON
72fb
BACK IMAGE COMPARISON
72fc
COMPARISON AREA
72fd
72
FRONT AND BACK IMAGES RECORD/ STOCK/ COMPARISON UNIT
FRONT AND BACK IMAGES STOCK 82
STfi, STGi, Mfi, Bfi,Sgi
FROM 90

FIG. 33

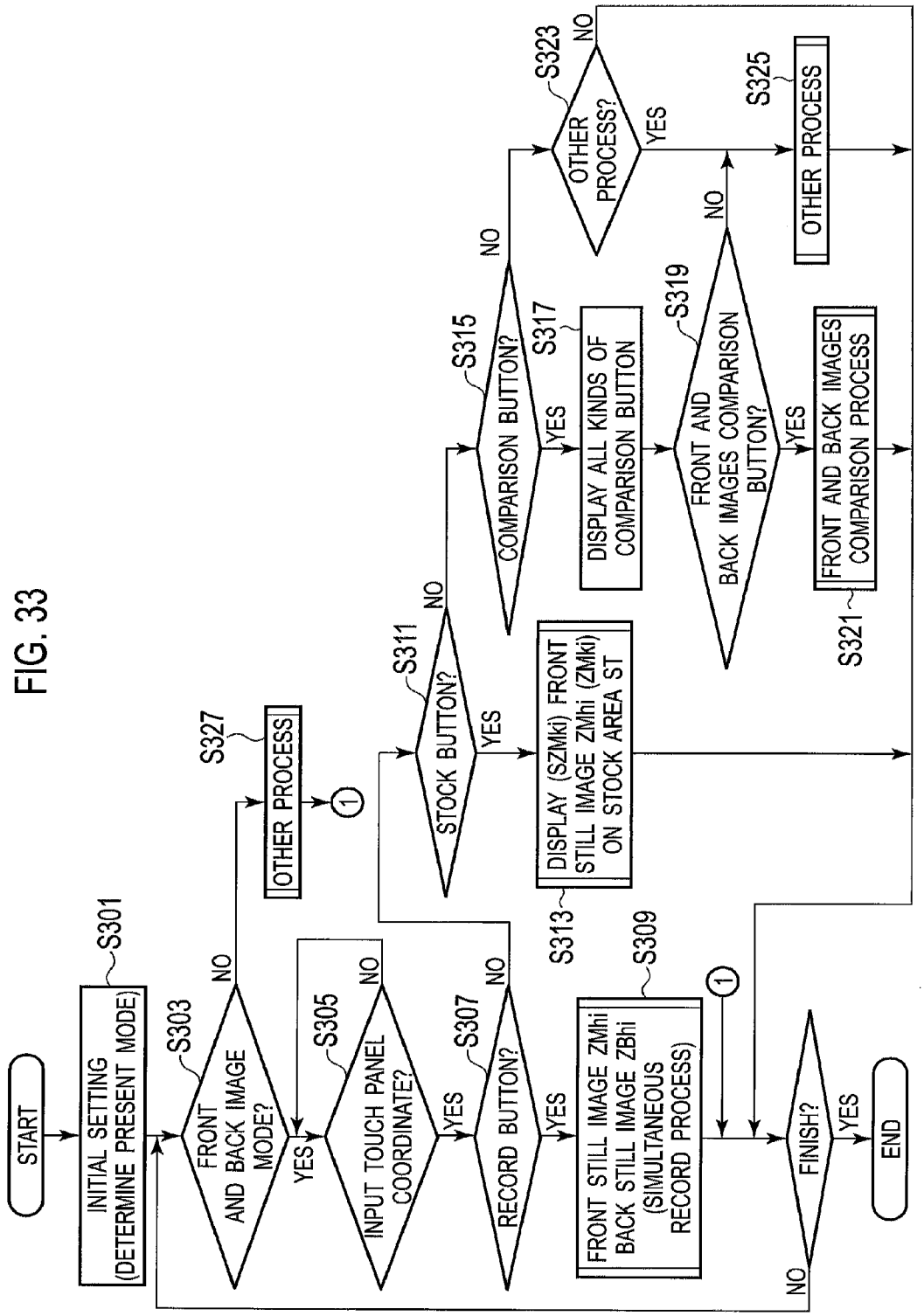
START
INITIAL SETTING (DETERMINE PRESENT MODE)
S301
FRONT AND BACK IMAGE MODE?
S303
NO
YES
OTHER PROCESS
S327
INPUT TOUCH PANEL COORDINATE?
S305
NO
YES
RECORD BUTTON?
S307
NO
YES
FRONT STILL IMAGE ZMhi BACK STILL IMAGE ZBhi (SIMULTANEOUS RECORD PROCESS)
S309
1
FINISH?
NO
YES
END
STOCK BUTTON?
S311
NO
YES
DISPLAY (SZMki) FRONT STILL IMAGE ZMhi (ZMki) ON STOCK AREA ST
S313
COMPARISON BUTTON?
S315
NO
YES
DISPLAY ALL KINDS OF COMPARISON BUTTON
S317
FRONT AND BACK IMAGES COMPARISON BUTTON?
S319
NO
YES
FRONT AND BACK IMAGES COMPARISON PROCESS
S321
OTHER PROCESS?
S323
NO
YES
OTHER PROCESS
S325

FIG. 34

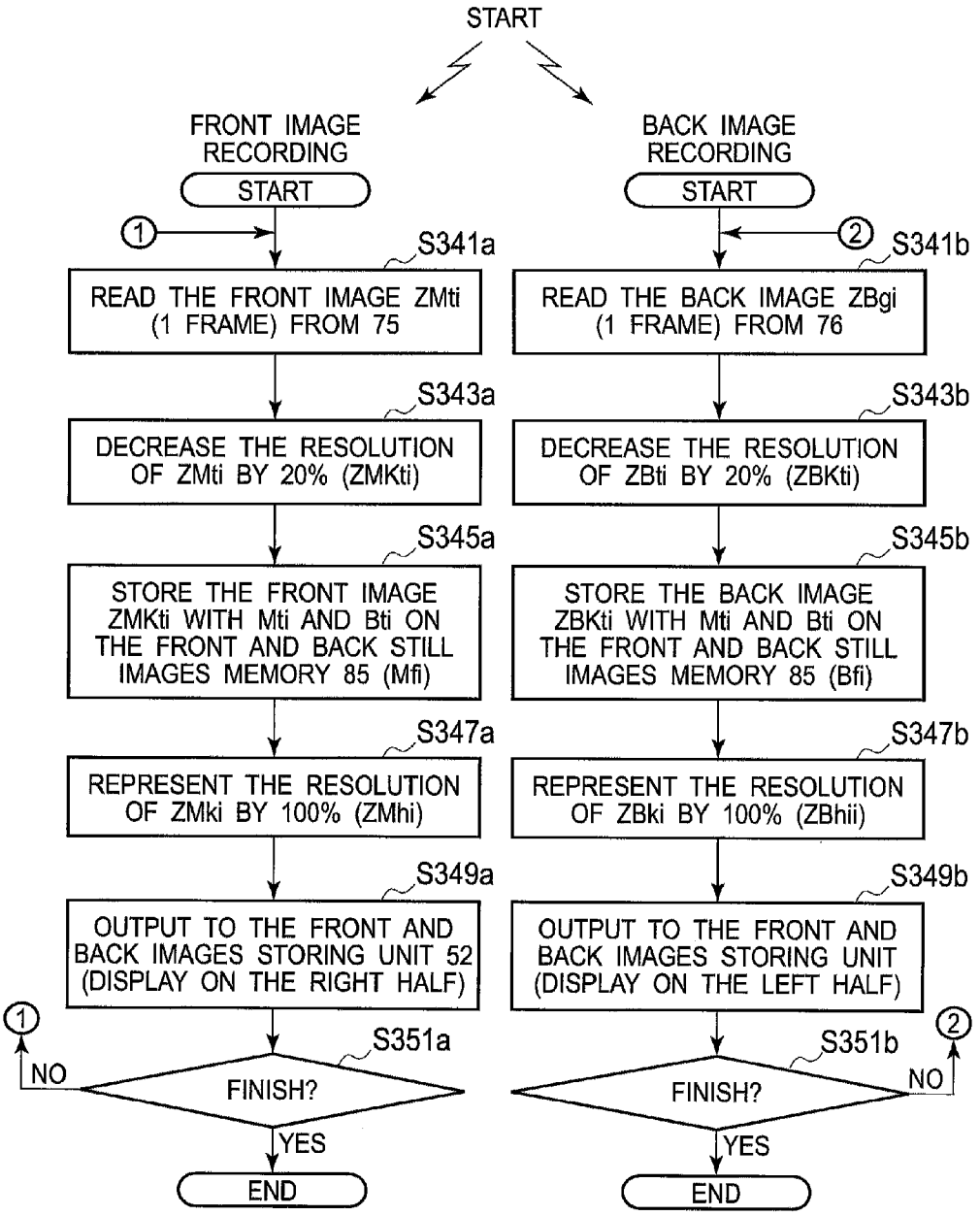
START
FRONT IMAGE RECORDING
START
BACK IMAGE RECORDING
START
1
2
S341a
READ THE FRONT IMAGE ZMti (1 FRAME) FROM 75
S341b
READ THE BACK IMAGE ZBgi (1 FRAME) FROM 76
S343a
DECREASE THE RESOLUTION OF ZMti BY 20% (ZMKti)
S343b
DECREASE THE RESOLUTION OF ZBti BY 20% (ZBKti)
S345a
STORE THE FRONT IMAGE ZMKti WITH Mti AND Bti ON THE FRONT AND BACK STILL IMAGES MEMORY 85 (Mfi)
S345b
STORE THE BACK IMAGE ZBKti WITH Mti AND Bti ON THE FRONT AND BACK STILL IMAGES MEMORY 85 (Bfi)
S347a
REPRESENT THE RESOLUTION OF ZMki BY 100% (ZMhi)
S347b
REPRESENT THE RESOLUTION OF ZBki BY 100% (ZBhii)
S349a
OUTPUT TO THE FRONT AND BACK IMAGES STORING UNIT 52 (DISPLAY ON THE RIGHT HALF)
S349b
OUTPUT TO THE FRONT AND BACK IMAGES STORING UNIT (DISPLAY ON THE LEFT HALF)
S351a
FINISH?
NO
YES
END
S351b
FINISH?
NO
YES
END

FIG. 35

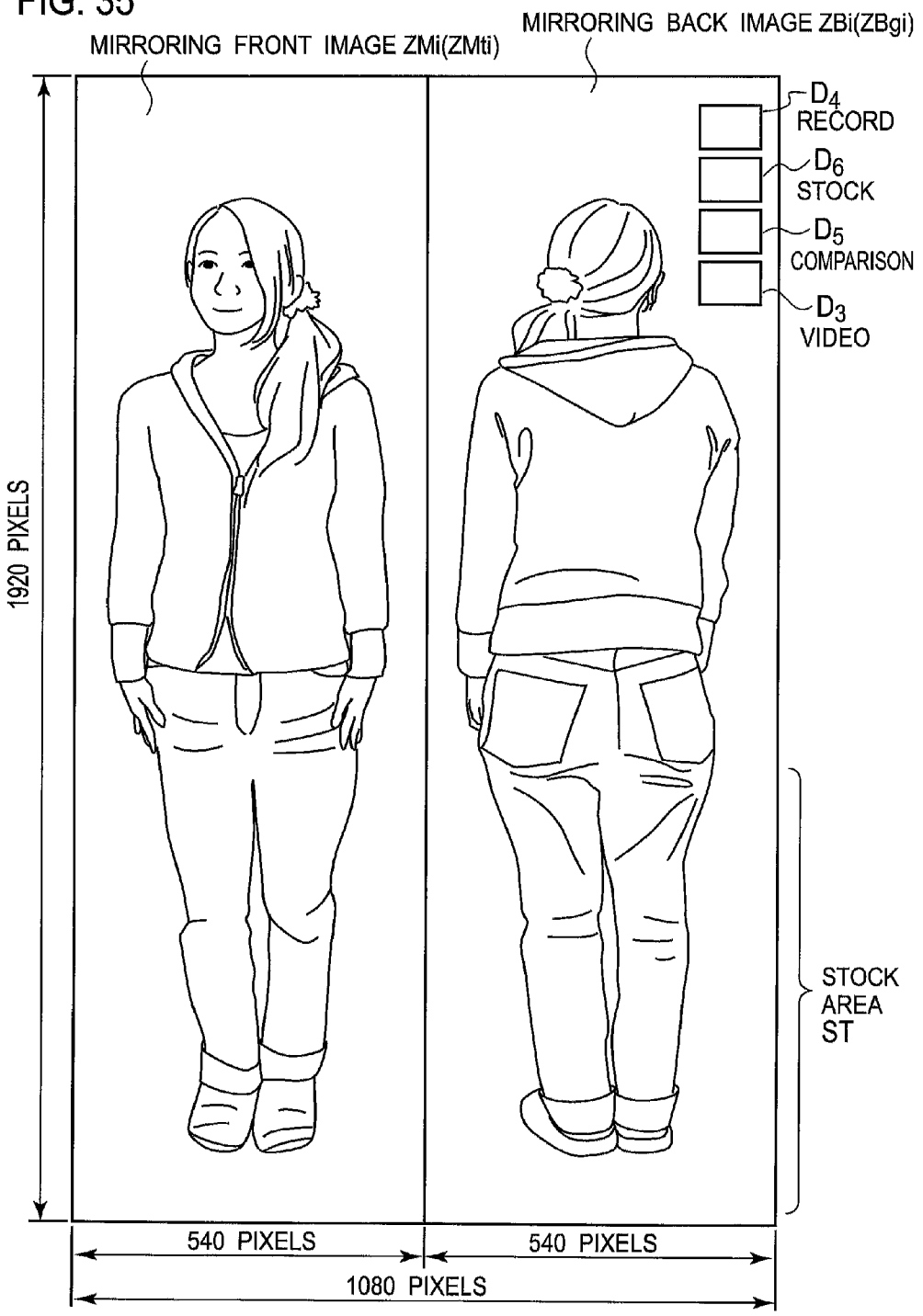
MIRRORING FRONT IMAGE ZMi(ZMti)
MIRRORING BACK IMAGE ZBi(ZBgi)
D4
RECORD
D6
STOCK
D5
COMPARISON
D3
VIDEO
1920 PIXELS
STOCK
AREA
ST
540 PIXELS
540 PIXELS
1080 PIXELS

FIG. 36

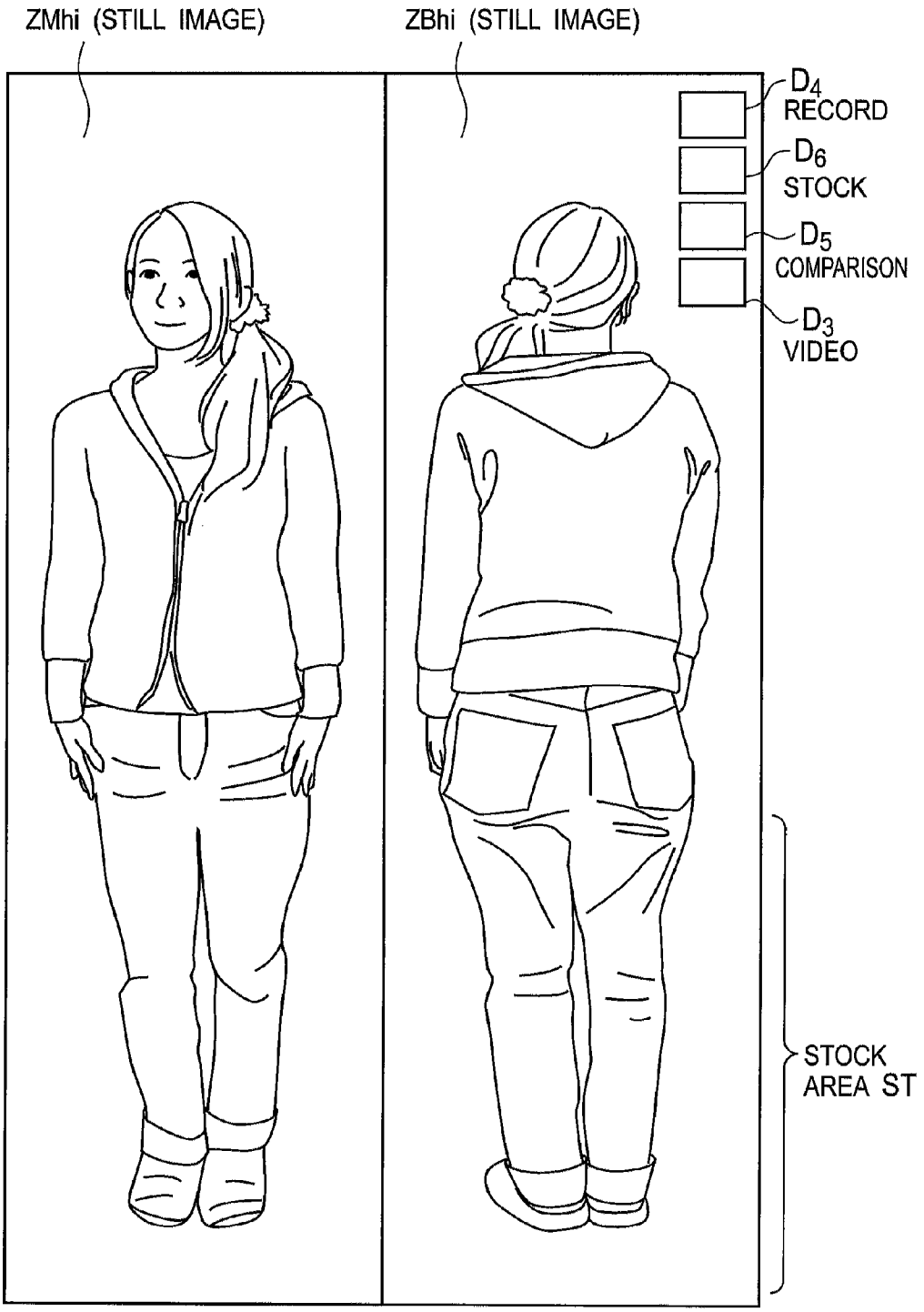
ZMhi (STILL IMAGE)
ZBhi (STILL IMAGE)
D4
RECORD
D6
STOCK
D5
COMPARISON
D3
VIDEO
STOCK
AREA ST

FIG. 37

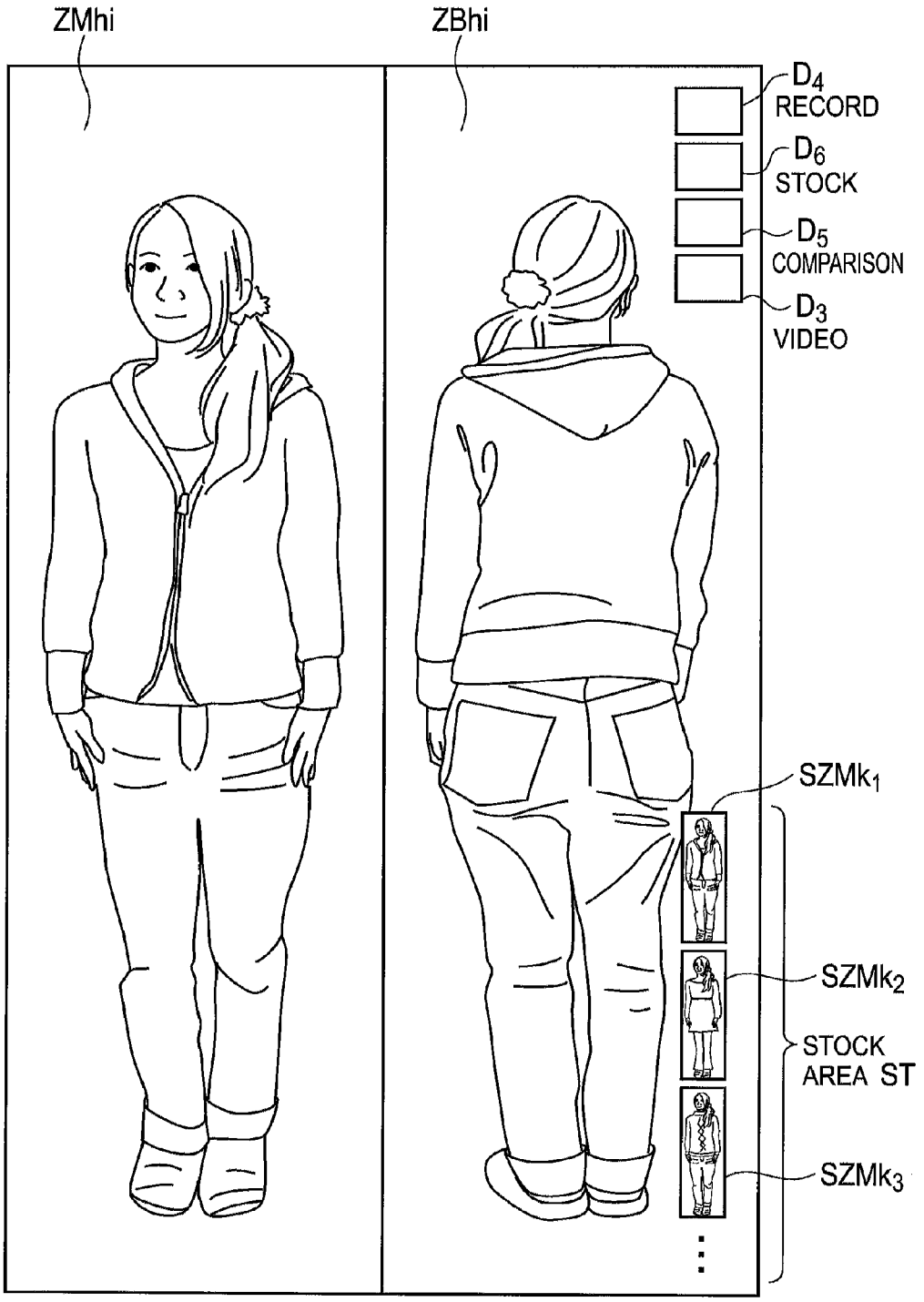
ZMhi
ZBhi
D4
RECORD
D6
STOCK
D5
COMPARISON
D3
VIDEO
SZMk1
SZMk2
STOCK
AREA ST
SZMk3

FIG. 38

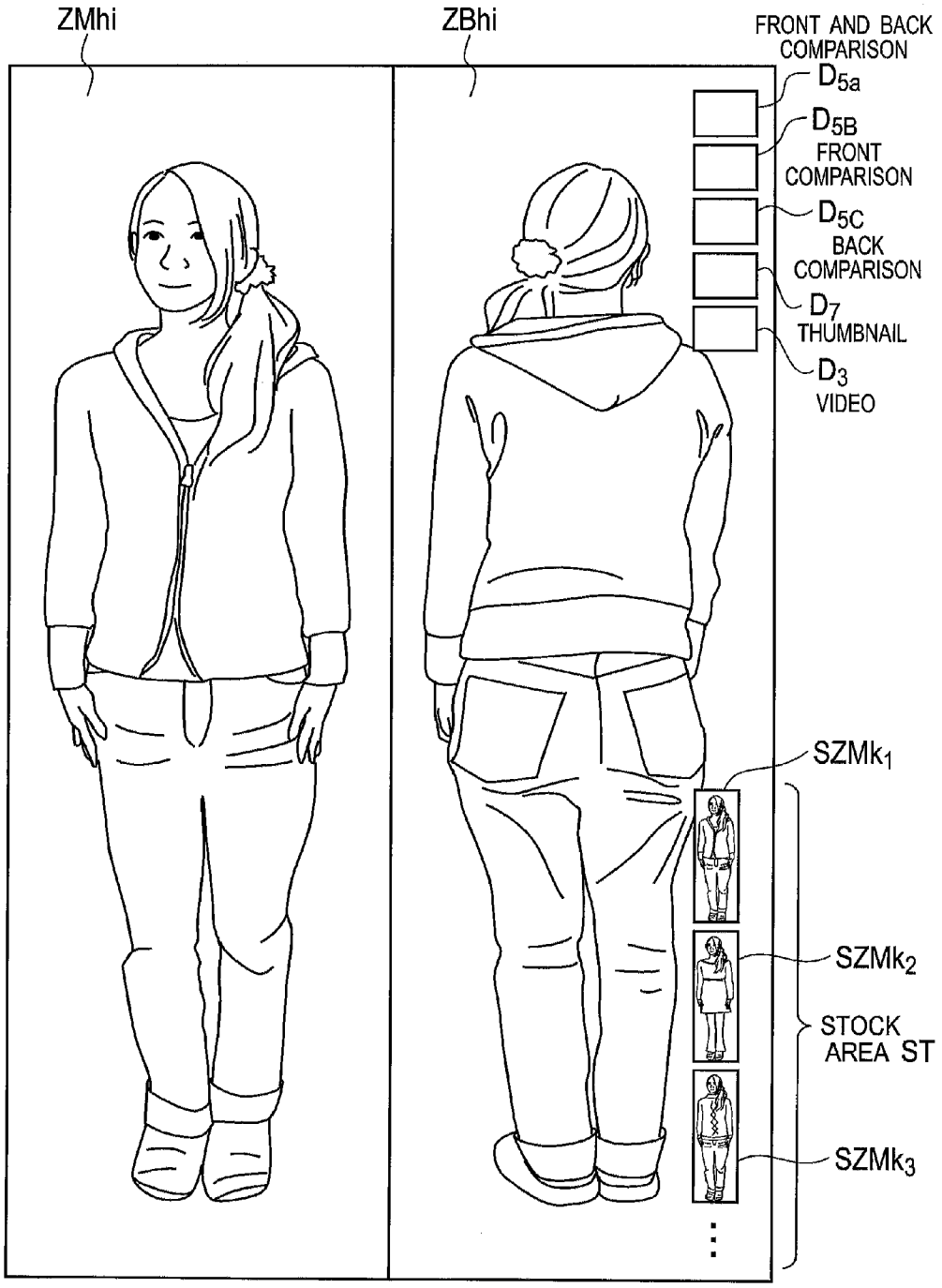
ZMhi
ZBhi
FRONT AND BACK COMPARISON
D5a
D5B
FRONT COMPARISON
D5C
BACK COMPARISON
D7
THUMBNAIL
D3
VIDEO
SZMk1
SZMk2
STOCK AREA ST
SZMk3

FIG. 39

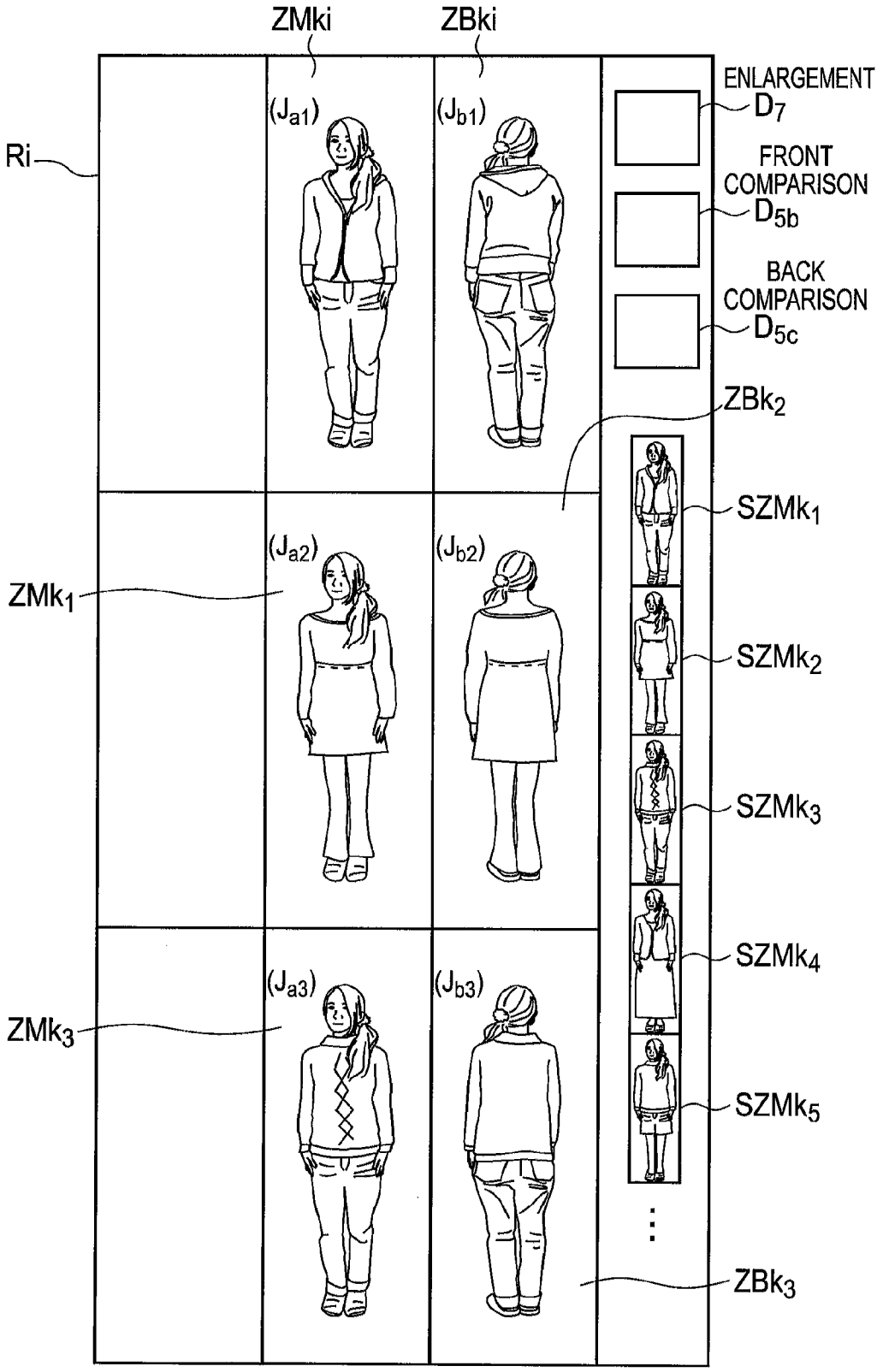
ZMki
ZBki
Ri
(Ja1)
(Jb1)
ENLARGEMENT
D7
FRONT COMPARISON
D5b
BACK COMPARISON
D5c
ZBk2
SZMk1
(Ja2)
(Jb2)
ZMk1
SZMk2
SZMk3
SZMk4
(Ja3)
(Jb3)
ZMk3
SZMk5
ZBk3

FIG. 40

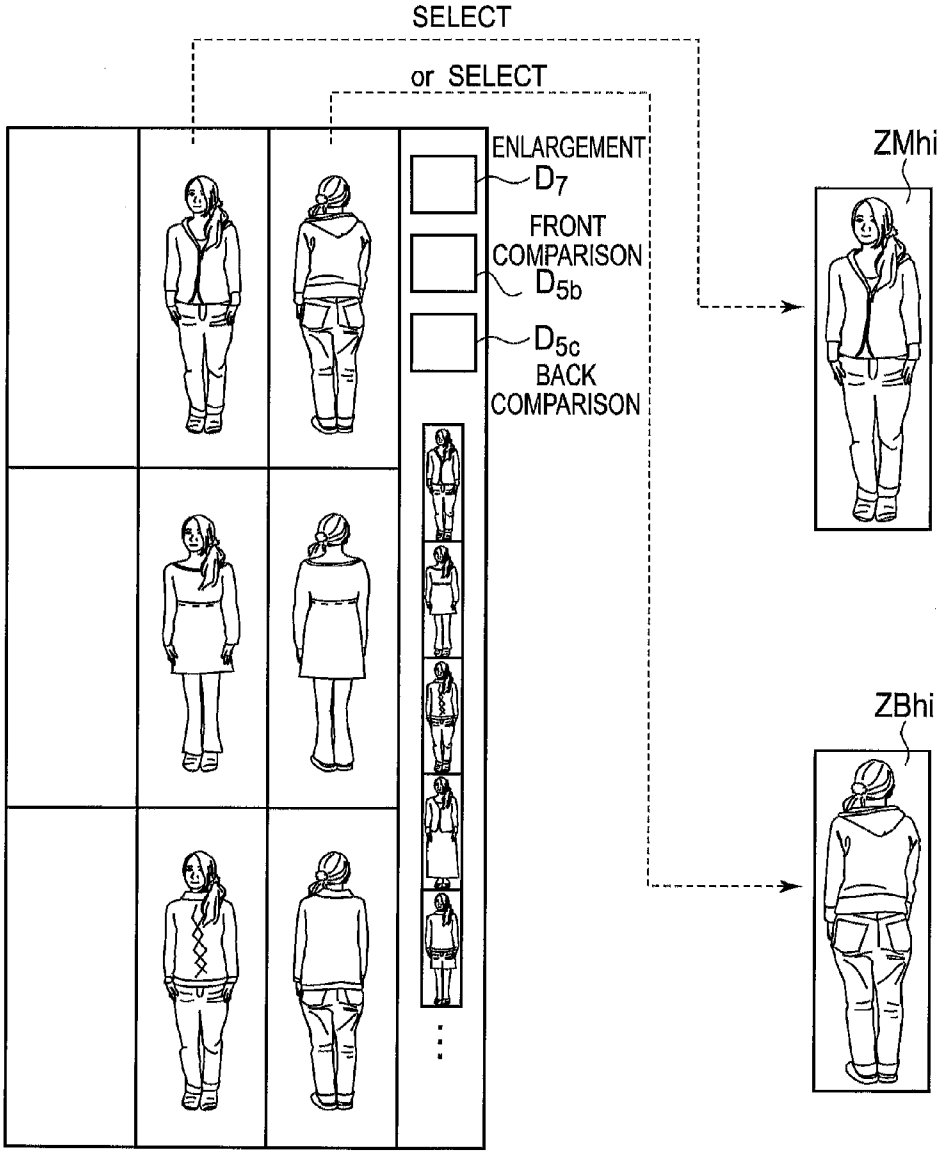
SELECT
or SELECT
ENLARGEMENT
D7
FRONT
COMPARISON
D5b
D5c
BACK
COMPARISON
ZMhi
ZBhi

FIG. 41

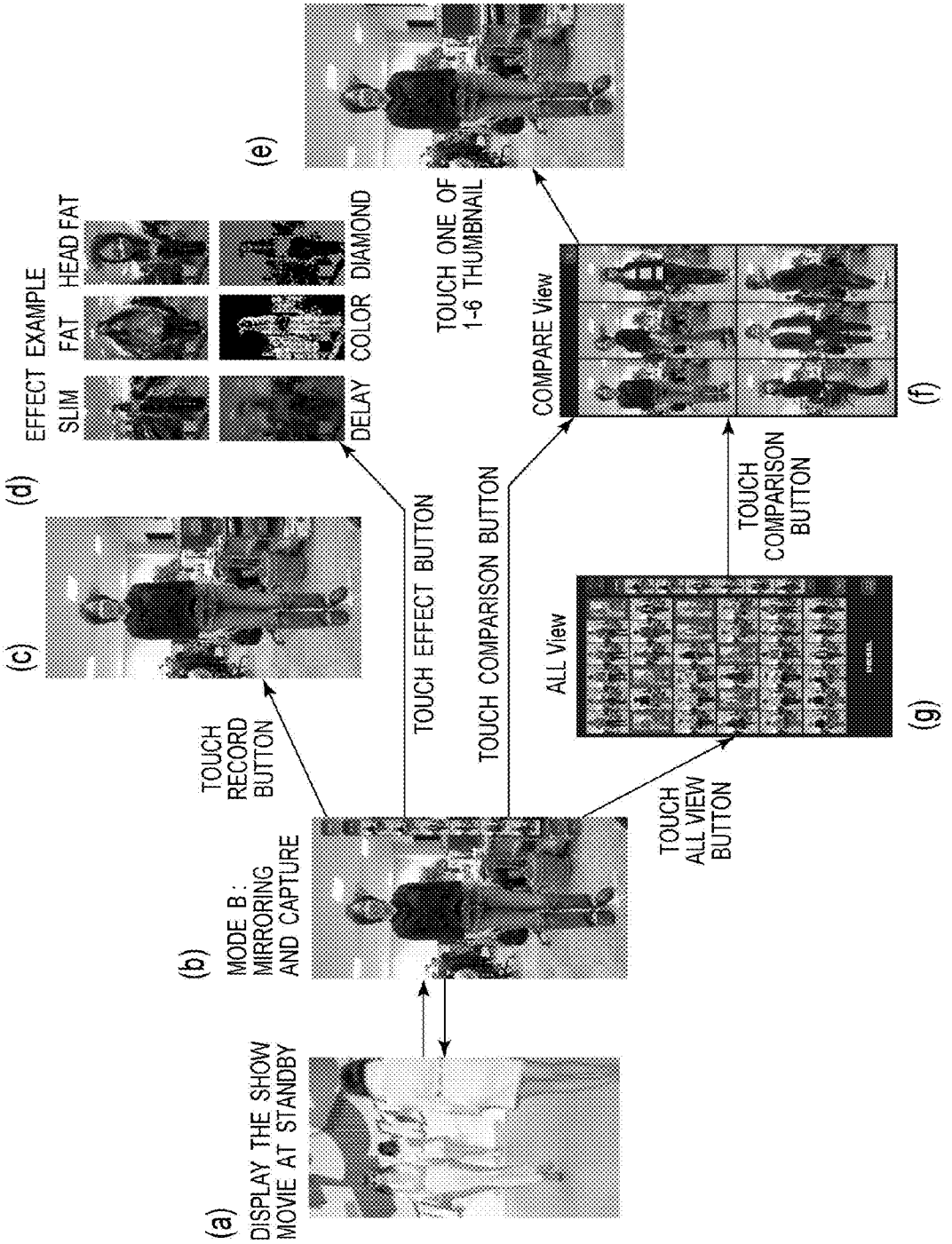
(a)
DISPLAY THE SHOW MOVIE AT STANDBY
(b)
MODE B: MIRRORING AND CAPTURE
TOUCH RECORD BUTTON
(c)
(d)
EFFECT EXAMPLE
SLIM
FAT
HEAD FAT
DELAY
COLOR
DIAMOND
TOUCH EFFECT BUTTON
TOUCH COMPARISON BUTTON
TOUCH ALL VIEW BUTTON
ALL View
(g)
TOUCH COMPARISON BUTTON
COMPARE View
(f)
TOUCH ONE OF 1-6 THUMBNAIL
(e)

FIG. 42

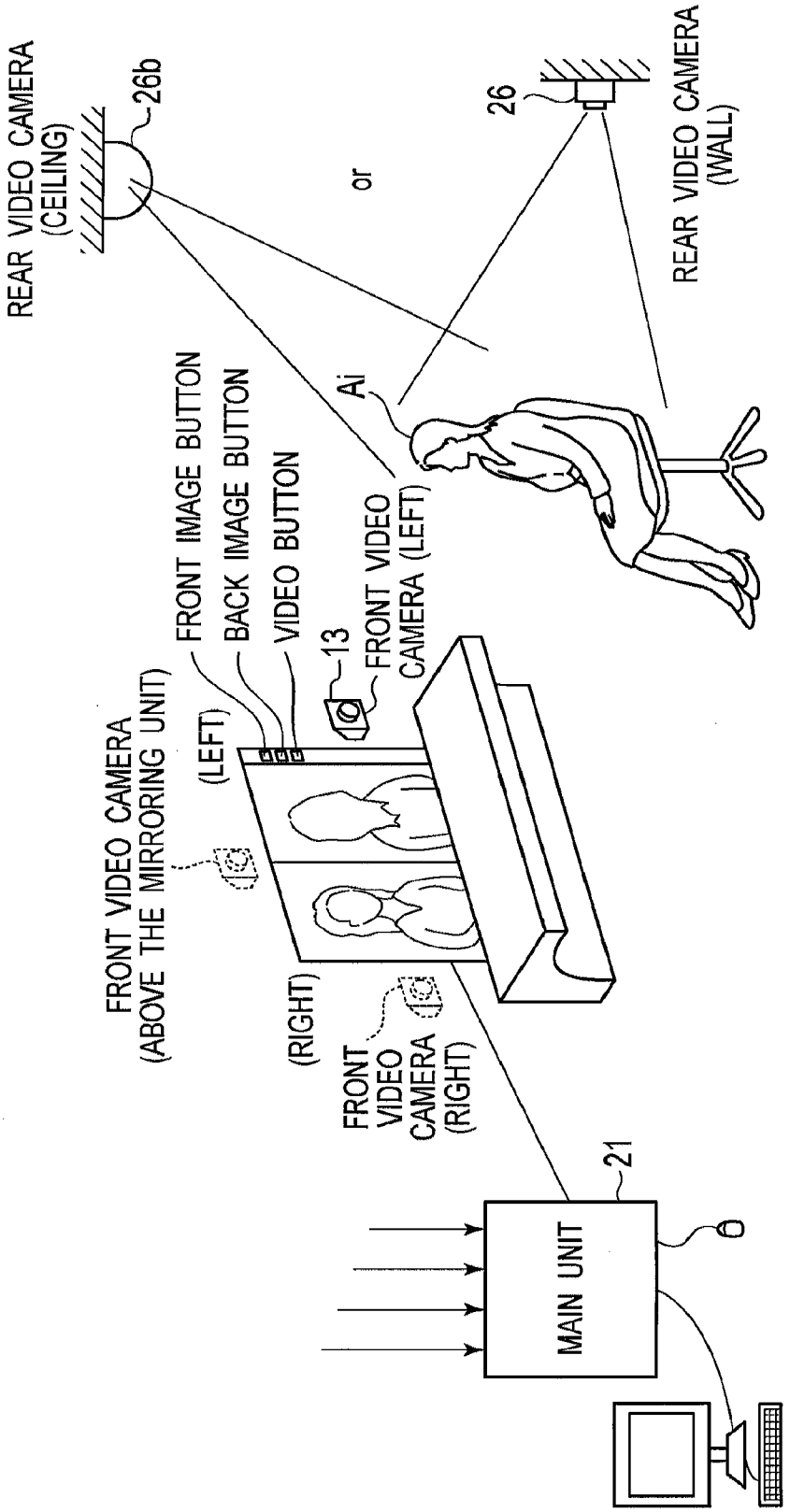
REAR VIDEO CAMERA (CEILING)
26b
or
26
REAR VIDEO CAMERA (WALL)
Ai
FRONT IMAGE BUTTON
BACK IMAGE BUTTON
VIDEO BUTTON
13
FRONT VIDEO CAMERA (LEFT)
FRONT VIDEO CAMERA (ABOVE THE MIRRORING UNIT)
(LEFT)
(RIGHT)
FRONT VIDEO CAMERA (RIGHT)
21
MAIN UNIT
6

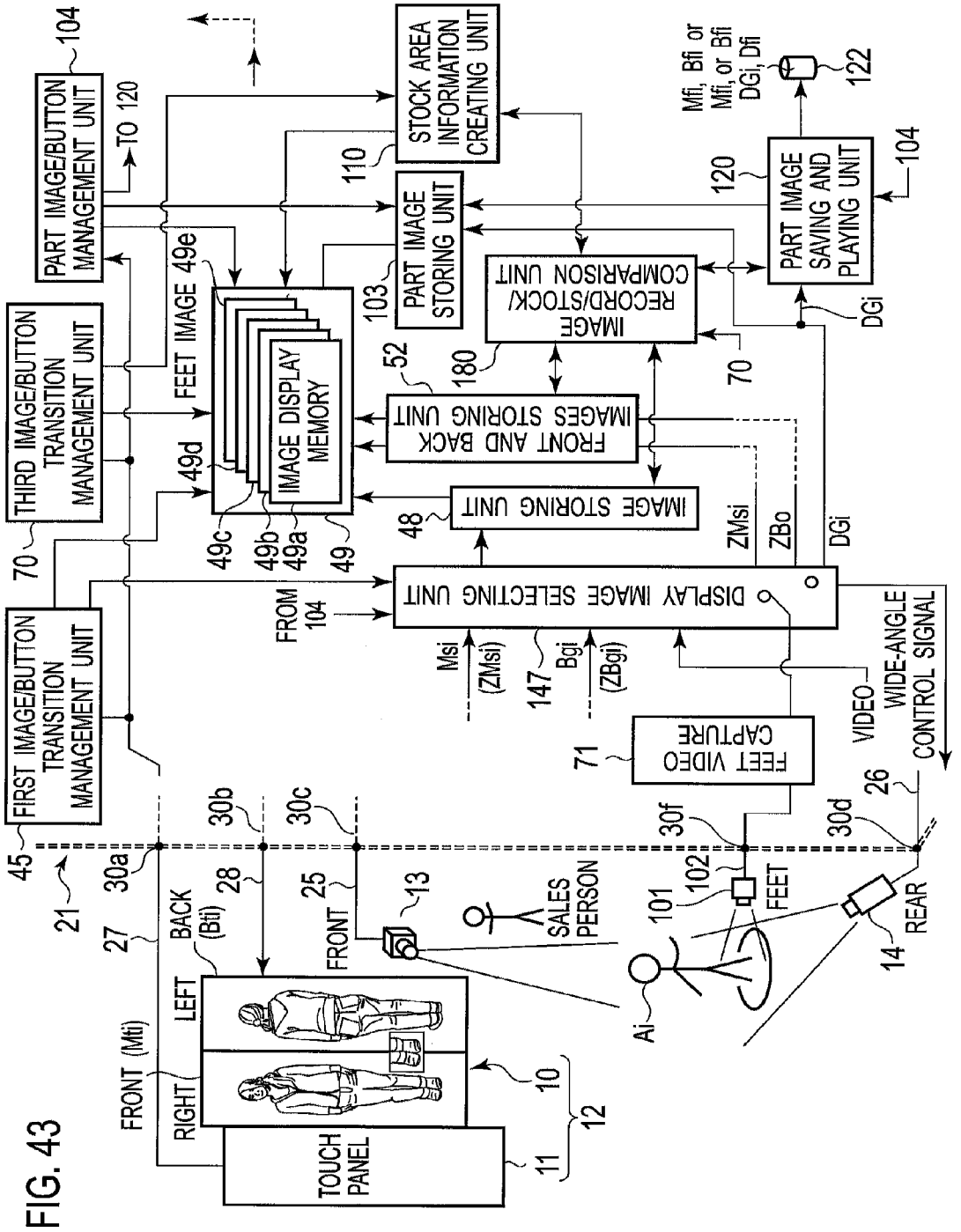
PART IMAGE/BUTTON MANAGEMENT UNIT
104
TO 120
THIRD IMAGE/BUTTON TRANSITION MANAGEMENT UNIT
70
FIRST IMAGE/BUTTON TRANSITION MANAGEMENT UNIT
45
FEET IMAGE 49e
IMAGE DISPLAY MEMORY
49d
49c
49b
49a
49
STOCK AREA INFORMATION CREATING UNIT
110
PART IMAGE STORING UNIT
103
IMAGE RECORD/STOCK/ COMPARISON UNIT
180
FRONT AND BACK IMAGES STORING UNIT
52
IMAGE STORING UNIT
48
DISPLAY IMAGE SELECTING UNIT
147
FROM 104
Msi
(ZMsi)
Bgi
(ZBgi)
ZMsi
ZBo
DGi
70
PART IMAGE SAVING AND PLAYING UNIT
120
104
Mfi, Bfi or Mfi, or Bfi DGi, Dfi
122
FEET VIDEO CAPTURE
71
VIDEO
WIDE-ANGLE CONTROL SIGNAL
26
30a
30b
30c
30d
30f
21
27
28
25
BACK (Bti)
LEFT
RIGHT
FRONT (Mti)
FRONT
13
SALES PERSON
101
102
FEET
REAR
14
Ai
10
11
12
TOUCH PANEL

FIG. 43

FIG. 44

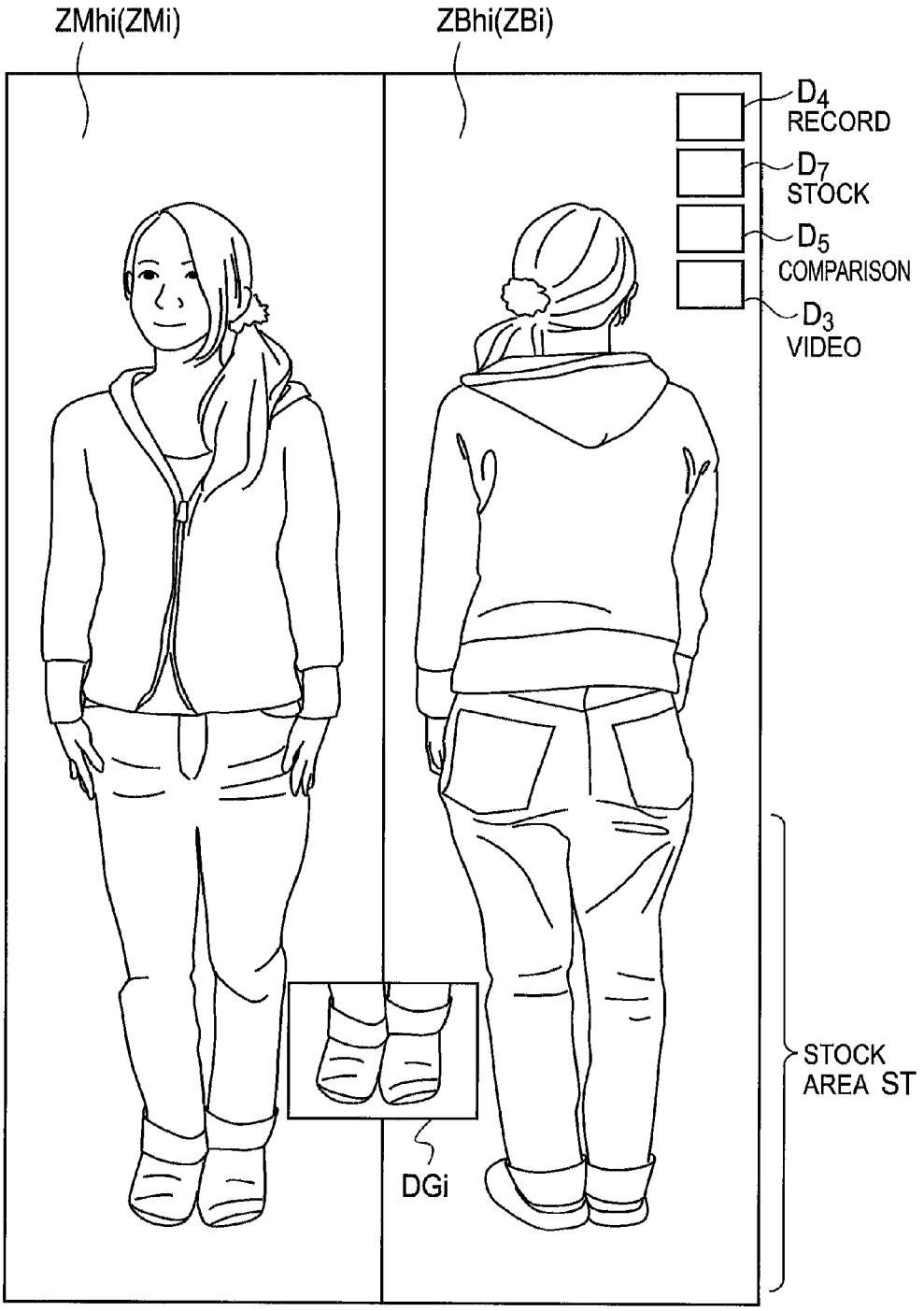
ZMhi(ZMi)
ZBhi(ZBi)
D4
RECORD
D7
STOCK
D5
COMPARISON
D3
VIDEO
STOCK
AREA ST
DGi

FIG. 45

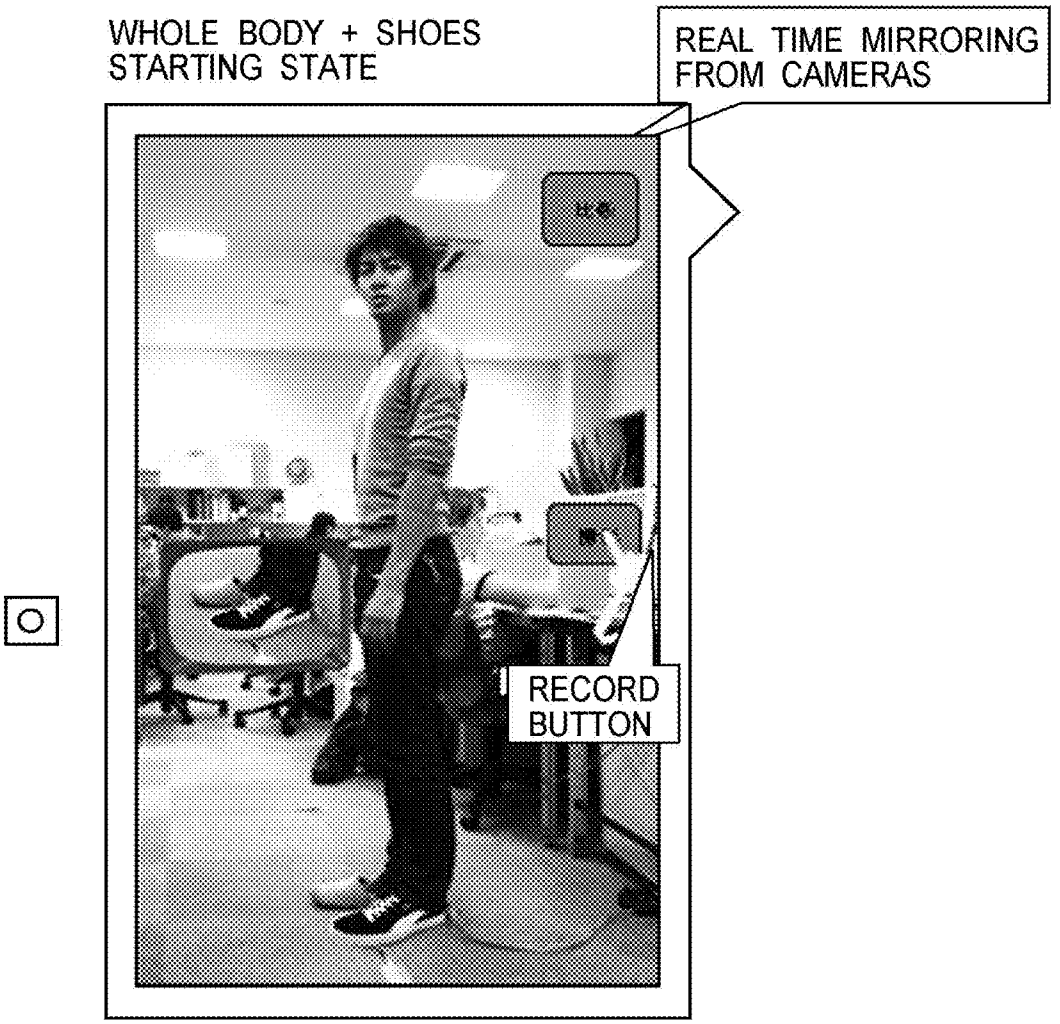
WHOLE BODY + SHOES
STARTING STATE
REAL TIME MIRRORING
FROM CAMERAS
RECORD
BUTTON

FIG. 46

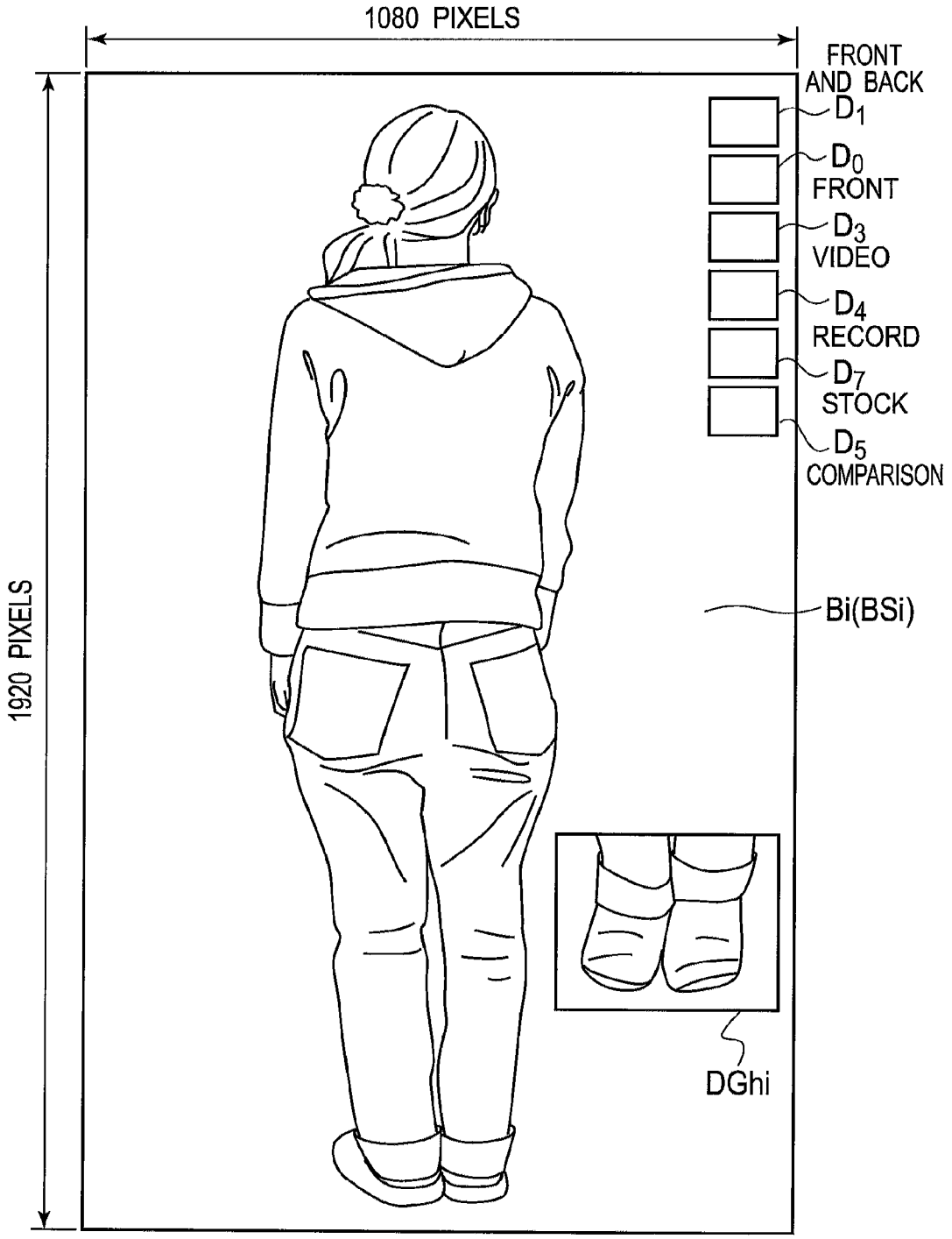
1080 PIXELS
1920 PIXELS
FRONT AND BACK
D1
D0
FRONT
D3
VIDEO
D4
RECORD
D7
STOCK
D5
COMPARISON
Bi(BSi)
DGhi

FIG. 47

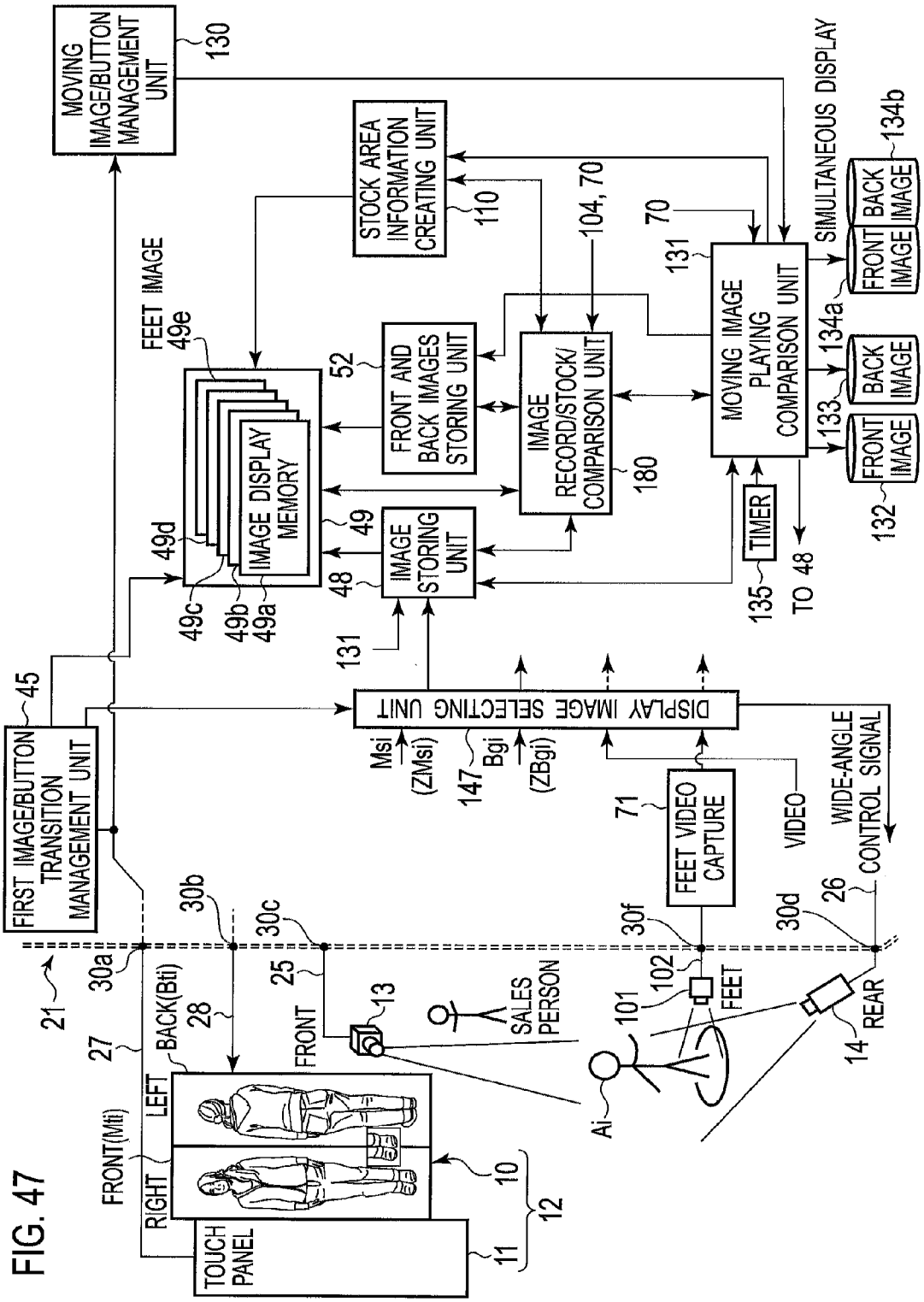
MOVING IMAGE/BUTTON MANAGEMENT UNIT
130
STOCK AREA INFORMATION CREATING UNIT
110
104, 70
70
131
SIMULTANEOUS DISPLAY
FRONT IMAGE
BACK IMAGE
134b
134a
133
132
FEET IMAGE
49e
52
FRONT AND BACK IMAGES STORING UNIT
IMAGE RECORD/STOCK/ COMPARISON UNIT
180
MOVING IMAGE PLAYING COMPARISON UNIT
IMAGE DISPLAY MEMORY
49
49d
49c
49b
49a
48
IMAGE STORING UNIT
TIMER
135
TO 48
131
45
FIRST IMAGE/BUTTON TRANSITION MANAGEMENT UNIT
DISPLAY IMAGE SELECTING UNIT
Msi
(ZMsi)
147
Bgi
(ZBgi)
71
FEET VIDEO CAPTURE
VIDEO
WIDE-ANGLE CONTROL SIGNAL
26
30a
30b
30c
30f
30d
21
27
BACK(Bti)
28
25
FRONT
13
SALES PERSON
102
101
FEET
REAR
14
Ai
LEFT
FRONT(Mti)
RIGHT
10
12
TOUCH PANEL
11

FIG. 48

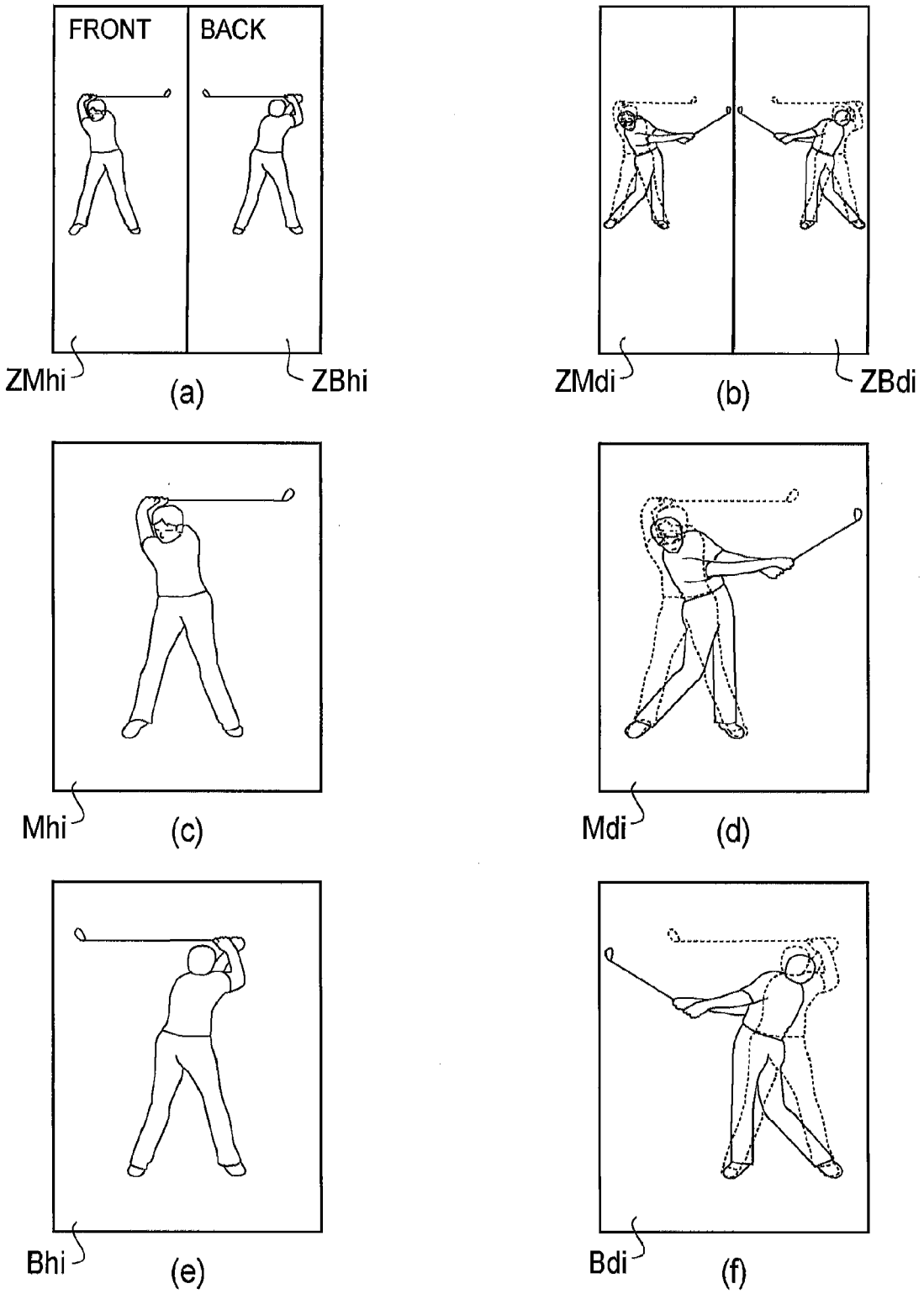

FIG. 49

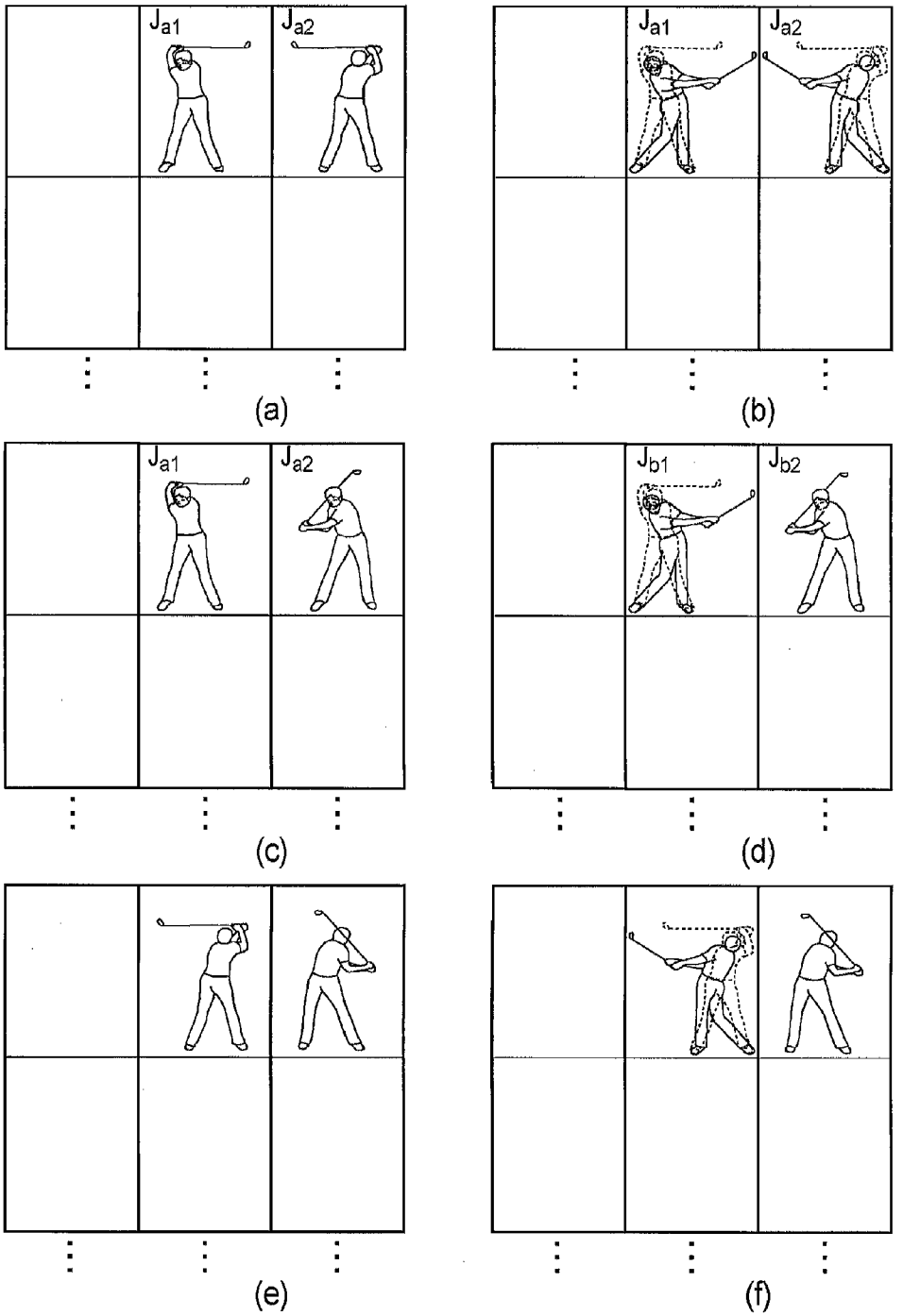

FIG. 50

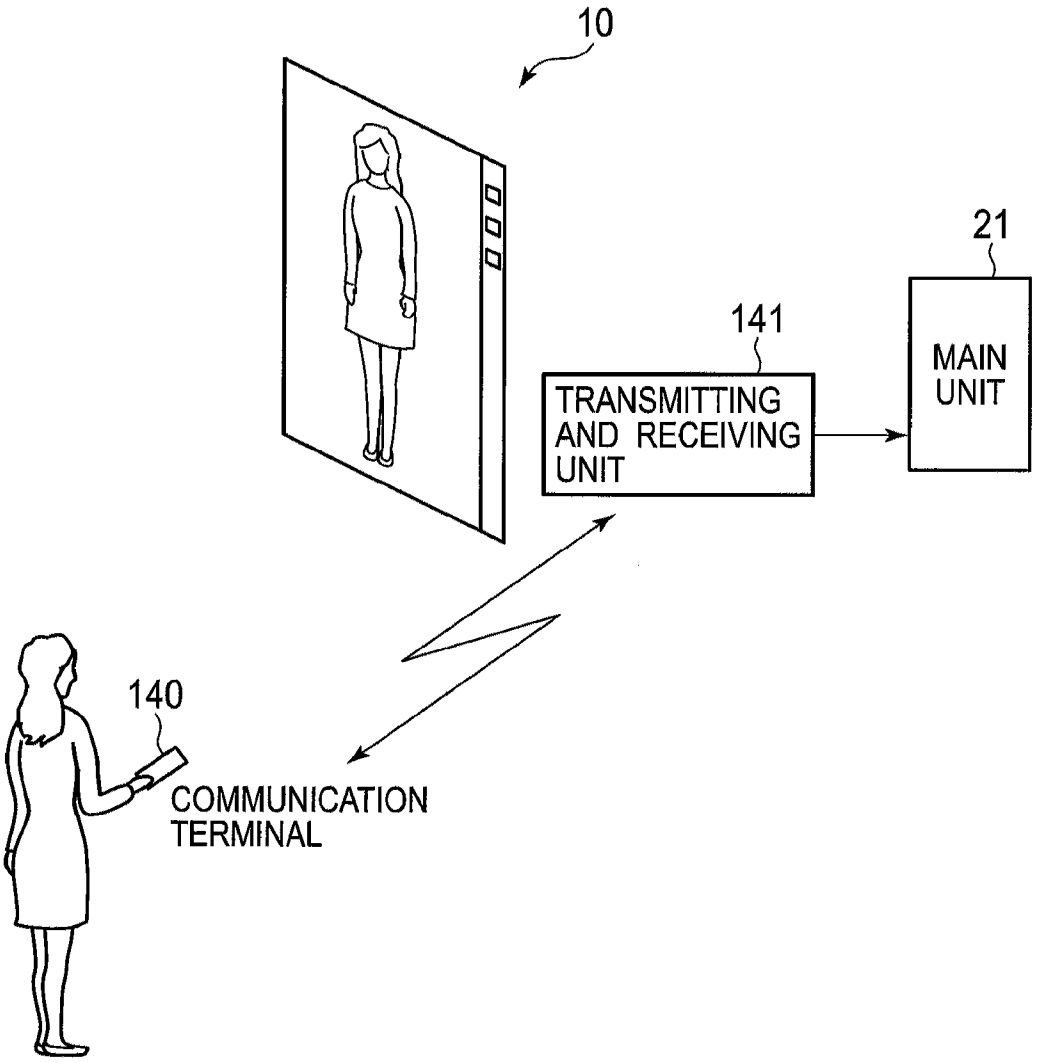
10
21
141
TRANSMITTING AND RECEIVING UNIT
MAIN UNIT
140
COMMUNICATION TERMINAL

FIG. 51

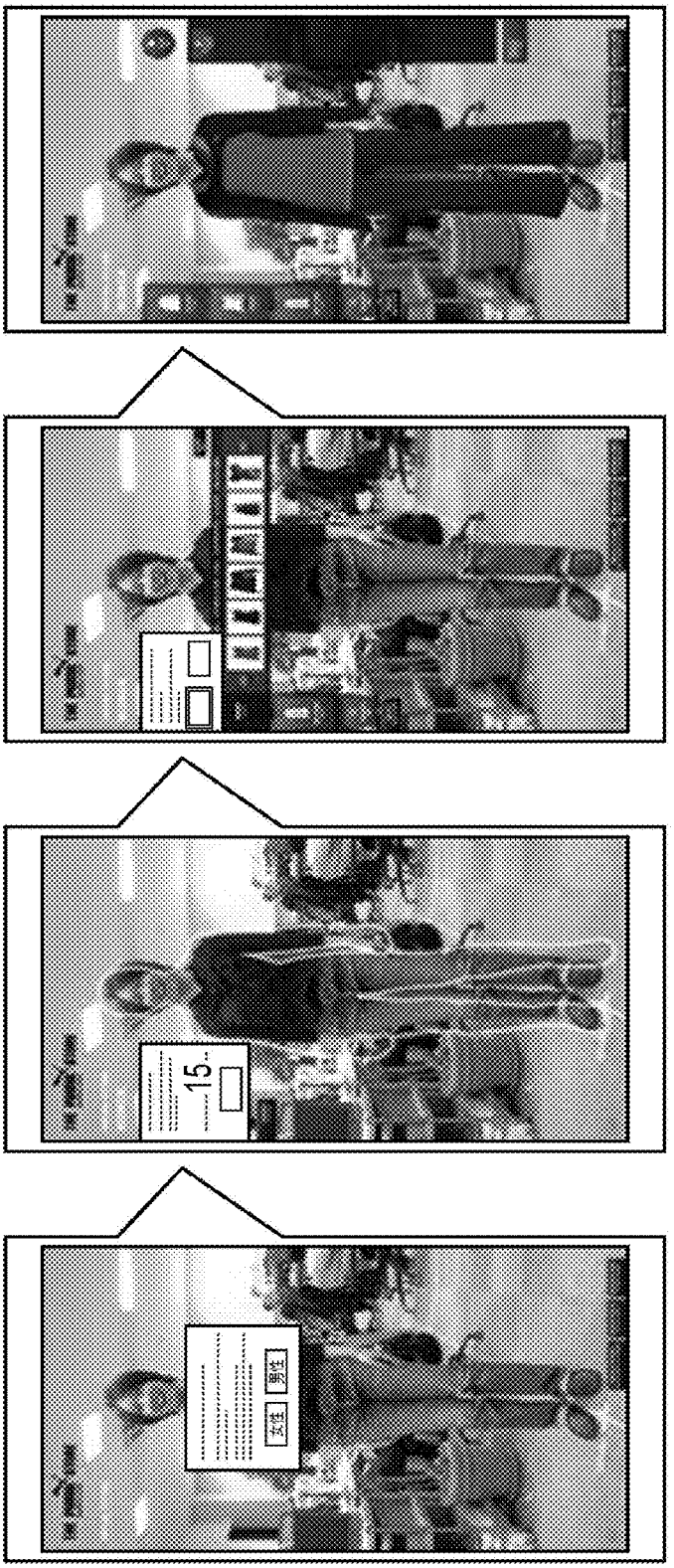

(a) (b) (c) (d)

FIG. 52

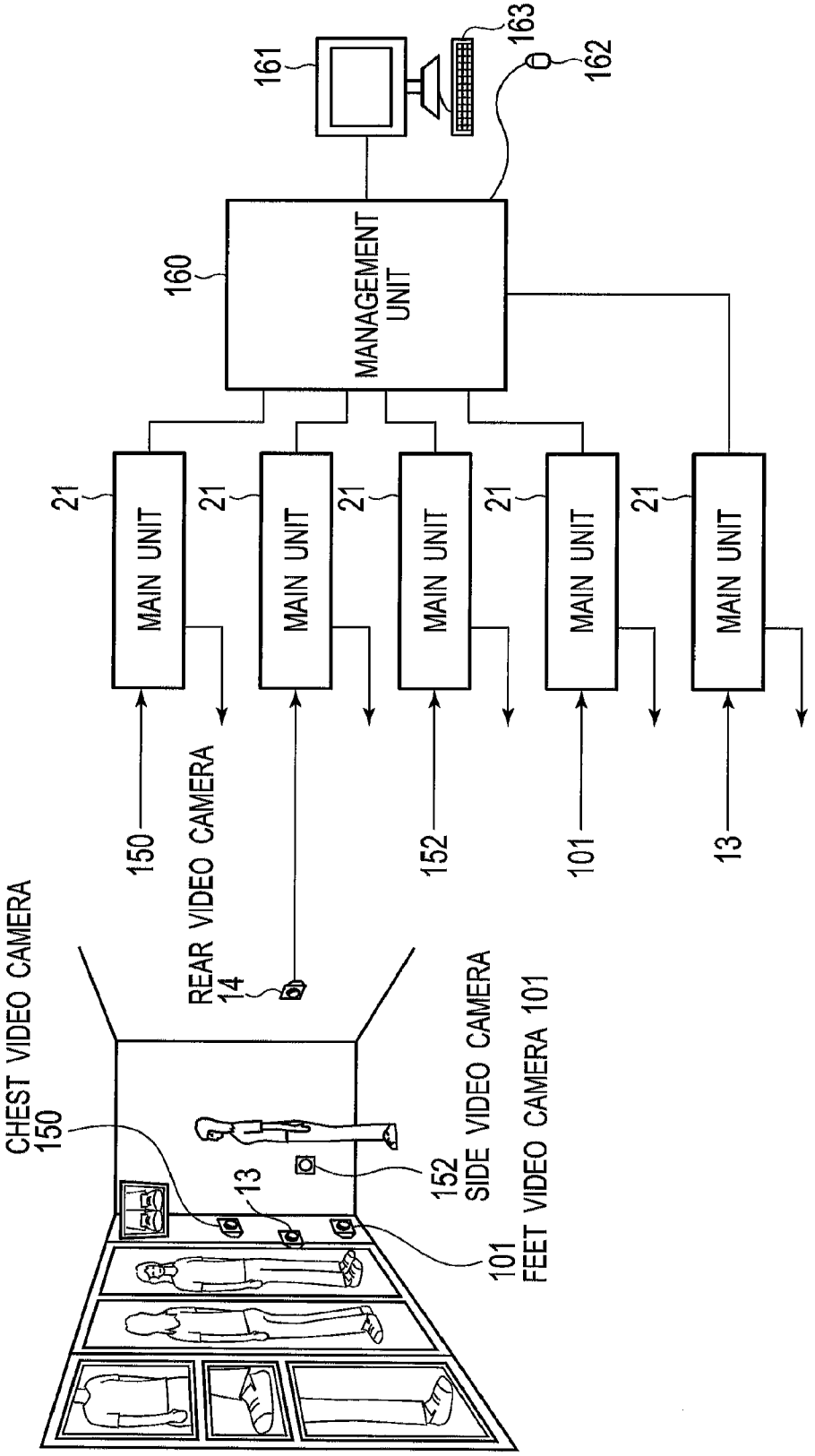
161
163
162
160
MANAGEMENT UNIT
21
MAIN UNIT
150
REAR VIDEO CAMERA
14
152
101
13
CHEST VIDEO CAMERA
150
13
152
SIDE VIDEO CAMERA
101
FEET VIDEO CAMERA 101

FIG. 53

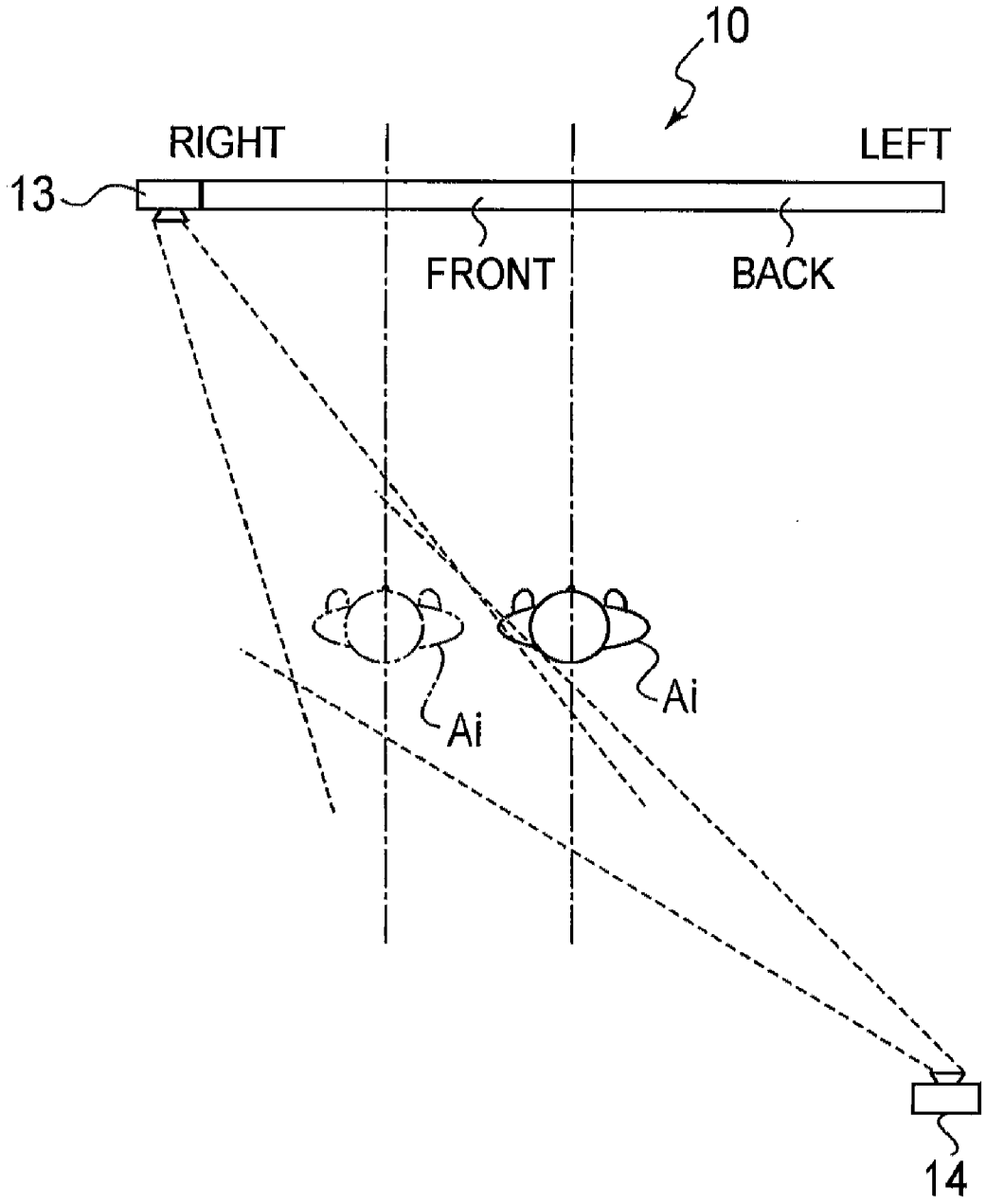

ELECTRONIC MIRRORING SYSTEM

TECHNICAL FIELD

[0001] The present invention relates to an electronic mirroring system that displays the images recorded from several directions on a display in a user's demanded direction.

BACKGROUND ART

[0002] Recently, there are the electronic mirroring devices to provide same visual sense with a general mirror by displaying the images of the subject recorded with a camera on the display in place of the mirror due to the high speed image processing technique.

[0003] For instance, Patent Literature 1 discloses a monitor screen placed at a mirror of a wash stand with video cameras arranged on the right side and the left side of the monitor screen in order to display a front image of a user stood in front of the wash stand regardless the user's height while showing the weather forecast, and so on simultaneously.

[0004] On the other hand, some shops in the apparel industry install the electronic mirroring device because of displaying the front image of the subject recorded with a camera on the display instantaneously (refer to Patent Literature 2).

CITATION LIST

Patent Literature

[0005] PTL 1: Japanese Patent No. 3505575

[0006] PTL 2: Japanese Patent No. 4598842

SUMMARY OF INVENTION

Technical Problem

[0007] Patent Literature 1 and Patent Literature 2 disclose the electronic mirroring device to display the images recorded the front of the subject on the display (a monitor, or a flat panel television). Therefore the electronic mirroring device is not able to display a back image of the subject unless the subject turns around to record the back image.

[0008] In Patent Literature 2, the back image is possible to be displayed on the display by storing the back image (a still image) recorded with the camera when the subject turns around.

[0009] That is, the back image is not able to display unless the user turns around to show the back toward the camera arranged on the side of the display in Patent Literature 2. The problem is that the action is troublesome for the user as the subject.

[0010] Moreover, the user may want to display a wearing image of a pair of shoes at the same time when the user tries on the shoes. The user may also want to display a side image at the same time (so called the multi-direction view).

[0011] However, the electronic mirroring device disclosed in Patent Literature 1 and Patent Literature 2 records the images from the front side only so that the electronic mirroring device is not able to carry out the user's demand.

[0012] The present invention provides the electronic mirroring system to display the images of the multi-direction view (a back, a front, a side, or a part) at the same time.

Solution to Problem

[0013] A summary of the present invention is an electronic mirroring system for interlockingly displaying images of a person as a subject taken from multiple directions, the electronic mirroring system comprising: a mirroring unit including a display of i pixels in length by m pixels in width and a touch panel provided on the display, the mirroring unit being arranged in front of the subject; a front video camera having a CCD of i pixels in length by m pixels in width and a wide-angle control for widening a view angle and being arranged on a side of the mirroring unit for taking a front image of the subject, the front video camera being configured to output a frame of an image taken without the wide-angle control as a first front image and another frame of an image taken with the wide-angle control as a second front image; a rear video camera having a CCD of i pixels in length by m pixels in width and a wide-angle control for widening a view angle and being arranged behind the subject for taking a back image of the subject, the rear video camera being configured to output a frame of an image taken without the wide-angle control as a first back image and another frame of an image taken with the wide-angle control as a second back image; a first means for capturing the first front image or the second front image outputted from the front video camera; a second means for capturing the first back image or the second back image outputted from the rear video camera; a third means for outputting to the mirroring unit and displaying the first front image on the display while stopping input of the first back image or the second back image; a fourth means for sending a wide-angle control signal to the front video camera and the rear video camera in order to widen view angles while canceling the stopping of the input by the third means in response to an instruction for interlocking display of the front image and the back image; a fifth means for extracting an image of a first range including the subject therein from the second front image and outputting the extracted image as an extracted front image in response to the instruction for interlocking display; a sixth means for extracting an image of a second range including a back of the subject therein from the second back image and outputting the extracted image as an extracted back image in response to the instruction for interlocking display; a seventh means for changing the extracted front image outputted from the fifth means to a size of e pixels in length by h pixels in width smaller than the size of i pixels in length by m pixels in width of the display and displaying the changed image as a mirroring front image on a first area in the display; and a eighth means for changing the extracted back image outputted from the sixth means to a size of r pixels in length by s pixels in width smaller than the size of i pixels in length by m pixels in width of the display and displaying the changed image as a mirroring back image on a second area different from the first area in the display.

Advantageous Effects of Invention

[0014] According to the present invention, it is possible to display the front image and the back image of a person as the subject on the display of i pixels in length by m pixels in width by enlarging the images as large as possible.

BRIEF DESCRIPTION OF DRAWINGS

[0015] FIG. **1** is an outline view of the electronic mirroring system according to the embodiment of the present invention.

[0016] FIG. **2** is an explanatory drawing to show the interlocking display of the mirroring front image and the mirroring back image by the electronic mirroring system according to the embodiment of the present invention.

[0017] FIG. **3** is a side view of the electronic mirroring system according to the embodiment 1 of the present invention.

[0018] FIG. **4** is a front view of the mirroring unit.

[0019] FIG. **5** is a top view of the electronic mirroring system according to the embodiment 1.

[0020] FIG. **6** is a top view of the electronic mirroring system according to the embodiment 1.

[0021] FIG. **7** is an outline block diagram of a main unit according to the embodiment 1.

[0022] FIG. **8** is an explanatory drawing to show a display area on the flat panel television.

[0023] FIG. **9** is an outline block diagram of a first image/button transition management unit.

[0024] FIG. **10** is an explanatory drawing to explain the operation of a mode determining unit.

[0025] FIG. **11** is an explanatory drawing to explain the operation of a button storing unit.

[0026] FIG. **12** (*a*) to (*c*) is an explanatory drawing to explain a button table.

[0027] FIG. **13** is an explanatory drawing to explain a display image selecting unit.

[0028] FIG. **14** is a flow chart to explain an outline process of the electronic mirroring system according to the embodiment 1.

[0029] FIG. **15** (*a*) to (*g*) is a transition chart of the image displayed on the display of the flat panel television according to the embodiment 1.

[0030] FIG. **16** (*g*) to (*j*) is a transition chart of the image displayed on the display of the flat panel television according to the embodiment 1.

[0031] FIG. **17** is an explanatory drawing to explain the display of the mirroring front image according to the embodiment 1.

[0032] FIG. **18** is an explanatory drawing of an example of the simultaneous display by a front and back images mode process.

[0033] FIG. **19** is an explanatory drawing of an example of the display by a back image mode process.

[0034] FIG. **20** (*a*) to (*d*) is an explanatory drawing to explain the size of the subject recorded with a CCD (i×m) with a wide-angle control.

[0035] FIG. **21** (*a*) to (*e*) is an explanatory drawing to explain the process of a front image area extracting unit and a back image area extracting unit.

[0036] FIG. **22** is an outline block diagram of the electronic mirroring system according to the embodiment 2 of the present invention.

[0037] FIG. **23** (*a*), (*b*) is an explanatory drawing to explain the effects.

[0038] FIG. **24** is an outline block diagram of the electronic mirroring system according to the embodiment 3 of the present invention.

[0039] FIG. **25** is an explanatory drawing to explain the display of a stock area according to the embodiment 3.

[0040] FIG. **26** (*a*), (*b*) is an explanatory drawing of a third transition table.

[0041] FIG. **27** (*a*), (*b*) is an explanatory drawing of the third transition table.

[0042] FIG. **28** (*a*) to (*d*) is an explanatory drawing to explain each mode process according to the embodiment 3.

[0043] FIG. **29** (*a*) to (*f*) is an explanatory drawing to explain each mode process according to the embodiment 3.

[0044] FIG. **30** (*a*) to (*c*) is an explanatory drawing to explain each image stock memory.

[0045] FIG. **31** (*a*) to (*c*) is an explanatory drawing to explain each image memory.

[0046] FIG. **32** is an outline block diagram of a front and back images record/stock/comparison unit.

[0047] FIG. **33** is a flow chart to explain the process of the electronic mirroring system according to the embodiment 3.

[0048] FIG. **34** is a flow chart to explain the process of the electronic mirroring system according to the embodiment 3.

[0049] FIG. **35** is an explanatory drawing to explain an example of the display by a front and back images mode process according to the embodiment 3.

[0050] FIG. **36** is an explanatory drawing to explain an example of the display by the front and back images mode process according to the embodiment 3.

[0051] FIG. **37** is an explanatory drawing to explain an example of the display by the front and back images mode process according to the embodiment 3.

[0052] FIG. **38** is an explanatory drawing to explain an example of the display by the front and back images mode process according to the embodiment 3.

[0053] FIG. **39** is an explanatory drawing to explain an example of the display by a comparison mode process according to the embodiment 3.

[0054] FIG. **40** is an explanatory drawing to explain an example of the display by the comparison mode process according to the embodiment 3.

[0055] FIG. **41** (*a*) to (*g*) is an explanatory drawing to explain a front image record, stock and comparison process according to the embodiment 3.

[0056] FIG. **42** is an outline block diagram of the electronic mirroring system according to the embodiment 4 of the present invention.

[0057] FIG. **43** is an outline block diagram of the electronic mirroring system according to the embodiment 5 of the present invention.

[0058] FIG. **44** is an explanatory drawing to explain an example of the unit image display by the electronic mirroring system according to the embodiment 5.

[0059] FIG. **45** is an explanatory drawing to explain an example of the unit image display by the electronic mirroring system according to the embodiment 5.

[0060] FIG. **46** is an explanatory drawing to explain an example of the unit image display by the electronic mirroring system according to the embodiment 5.

[0061] FIG. **47** is an outline block diagram of the electronic mirroring system according to the embodiment 6 of the present invention.

[0062] FIG. **48** (*a*) to (*f*) is an explanatory drawing of an example of the moving images display by the electronic mirroring system according to the embodiment 6.

[0063] FIG. **49** (*a*) to (*f*) is an explanatory drawing of an example of the moving images display by the electronic mirroring system according to the embodiment 6.

[0064] FIG. **50** is an outline view of the electronic mirroring system according to the embodiment 7 of the present invention.

[0065] FIG. **51** (*a*) to (*d*) is an explanatory drawing of the electronic mirroring system according to other embodiments of the present invention.

[0066] FIG. **52** is an explanatory drawing of the electronic mirroring system according to other embodiments.

[0067] FIG. **53** is an explanatory drawing of the electronic mirroring system according to other embodiments.

DESCRIPTION OF EMBODIMENTS

[0068] The embodiments of the present invention are explained in detail by referring to the drawings.

[0069] However, the drawings show a typical composition of the device and the system. It should be noted that the composition shown in the drawings may be different from the actual one. Therefore, a concrete composition should be defined by taking the following explanations into consideration. Moreover, it is obvious that some units of the composition may be different among the drawings.

[0070] Moreover, the following embodiments of the present invention illustrate the device and the method in order to realize the technical thought of the present invention and not to limit the materials, the shapes, the structures, and the arrangements to the following illustrated ones in the present invention. Technical thought of the present invention may be modified by adding various changes in a technical range described in the claims.

[0071] The electronic mirroring system (or a multi-direction view electronic mirroring system) of the embodiments can be used at the places such as a clothing store, a photo studio, a game shop, a lobby in a company, an optician, an elevator, a beauty parlor, a hotel, a house, a facility in an airport and so on.

[0072] FIG. **1** is an outline view of the electronic mirroring system according to the embodiment. The electronic mirroring system shown in FIG. **1** comprises a mirroring unit **12** (or a display unit) composed of a flat panel television **10** (a liquid crystal display or a plasma display (PDP)) and a touch panel **11** (electrostatic type, piezoelectric type, etc) attached on the flat panel television **10**, and a video camera **13** (or a front video camera **13**) arranged on a side (a right side, a left side or an upper side) of the mirroring unit **12**.

[0073] The touch panel **11** outputs X and Y coordinates of a touched position (touch panel coordinates TGi) when the touch panel **11** is touched.

[0074] The electronic mirroring system further comprises a video camera **14** (or a rear video camera **14**) placed behind a subject Ai and an electronic mirroring device **20** (a main unit **21**, a display device **22** and a mouse **23** are included). As shown in FIG. **2**, the flat panel television **10** (a monitor) of the mirroring unit **12** is able to display both the front image and the back image at the same time (or a simultaneous display mode).

[0075] In case of the simultaneous display mode, a mirroring front image ZMi created by applying a size correction process described later to the image of the front of the subject Ai recorded with the front video camera **13** and a mirroring back image ZBi created by applying a glare eliminating process and the size correction process described later to the image of the back of the subject Ai recorded with the rear video camera **14** are displayed at the same time.

[0076] When the subject Ai is recorded from the back side with the rear video camera **14**, the recorded image may contain the flat panel television **10** so that the image recorded with the rear video camera **14** may have a "glare" part (or a halation part). To avoid the "glare", a polarizing filter **14***a* may be set on the lens of the rear video camera **14**.

[0077] The mirroring image is a moving image. The main unit **21** of the electronic mirroring device **20** in the embodiment uses a high-speed CPU and hardware circuits. Therefore, the image of the subject Ai is displayed on the flat panel television **10** instantaneously like a mirror when the subject Ai stands in front of the mirroring unit **12**. The moving images recorded with the video cameras and displayed on the flat panel television **10** are called the mirroring images.

[0078] In the embodiment, the mirroring images displayed on the flat panel television **10** in the simultaneous display mode are called the mirroring front image ZMi and the mirroring back image ZBi.

[0079] Moreover, the mirroring image displayed on the flat panel television **10** in the front image mode is called the mirroring front image Mi, and the mirroring image in the back image mode is called the mirroring back image Bi.

[0080] The main unit **21** is included in each embodiment described later, and the sign for the main unit **21** is not changed for explanation.

[0081] The flat panel television **10** in the mirroring unit **12** is the plasma display (PDP) or the liquid crystal display of about 50 inches size (about 1920 pixels in length by 1080 pixels in width) in the embodiment. The mirroring unit **12** may be put in the wall, or arranged on the wall.

[0082] FIG. **3** is a side view of the electronic mirroring system according to the embodiment 1. FIG. **4** is a front view of the mirroring unit. FIG. **5** is a top view of the electronic mirroring system according to the embodiment 1.

[0083] As shown in FIG. **3**, the distance between the front video camera **13** and the subject Ai may be about from 150 centimeters to 200 centimeters. About 150 centimeters is preferable for recording the whole figure and about 50 centimeters is preferable for recording the head. The electronic mirror device **20** is put under the mirroring unit **12**.

[0084] In addition, the distance between the rear video camera **14** and the subject Ai may be about from 150 centimeters to 200 centimeters. About 150 centimeters is preferable for recording the whole figure and about 80 centimeters is preferable for recording the head.

[0085] As shown in FIG. **4**, the front video camera **13** is arranged at the right side of the mirroring unit **12** in designated height (About 950 millimeters) and direction.

[0086] As shown in FIG. **5**, the front video camera **13** (with a resolution of 1920 pixels in length by 1080 pixels in width) is arranged to incline the central optical axis about 14 degrees to the horizontal axis.

[0087] In addition, as shown in FIG. **5**, the rear video camera **14** (with a resolution of **1920** pixels in length by 1080 pixels in width) is arranged behind the subject Ai to aim the central optical axis at the center of the mirroring unit **12**.

[0088] The rear video camera **14** may be put in the wall (or arranged on the wall), or placed on a tripod (not shown).

[0089] The height of the front video camera **13** and the rear video camera **14** is adjustable to about 950 millimeters for the Japanese (for instance, person of 1650 millimeters in height), and to about 1000 millimeters, 1050 millimeters, or 1010 millimeters in the countries of tall persons.

[0090] As shown in FIG. **6**, the rear video camera **14** may be arranged on the left side of the mirroring unit **12** (in view of the mirroring unit **12**) and behind the subject Ai to incline the central optical axis about 14 degrees to the horizontal axis. Then the rear video camera **14** is not displayed on the flat panel television **10**.

Embodiment 1

[0091] FIG. **7** is an outline block diagram of the main unit **21** according to the embodiment 1.

[0092] As shown in FIG. **7**, the main unit **21** comprises a panel controller **33**, a video capture **34** (or a front video capture **34**) to capture the images recorded with the front video camera **13**, and a video capture **35** (or a back video capture **35**) to capture the images recorded with the rear video camera **14**.

[0093] The front video camera **13** and the back video camera **14** have a color CCD with a resolution of i by m pixels and are controlled to widen an angle of view by a control signal (or a wide-angle control signal) sent from the outside (an automatic wide-angle control function).

[0094] In FIG. **7**, the image output from the front video capture **34** is called a front image Mai (or a recorded front image), and the image output from the back video capture **35** is called a back image Bai (or a recorded back image).

[0095] The panel controller **33** is connected to the touch panel **11** with a cable **27** through a connector **30***a*. And the front video capture **34** is connected to the front video camera **13** with a cable **25** through a connector **30***c*. The back video capture **35** is connected to the rear video camera **14** with a cable **26** through a connector **30***d*.

[0096] The main unit **21** is connected to the flat panel television **10** with a cable **28** through a connector **30***b*.

[0097] Moreover, the main unit **21** comprises an image buffer memory **36** (or a front image buffer memory **36**) for storing the front image Mai outputted from the front video capture **34**, an image buffer memory **37** (or a back image buffer memory **37**) for storing the back image Bai outputted from the back video capture **35**, a front slimming unit **39**, a back slimming unit **40**, a hard disk **42** for storing video contents, a first image/button transition management unit **45**, a display image selecting unit **47**, an image display memory **49***a*, a button display memory **49***b*, an image storing unit **48**, a back image area extracting unit **51**, a front image area extracting unit **50**, a glare eliminator **53**, and so on.

[0098] As shown in FIG. **8**, the image display memory **49***a* is a memory for displaying images on an image display area **10***a* in the flat panel television **10**, and the button display memory **49***b* is a memory for displaying the buttons on a button display area **10***b*.

[0099] In FIG. **7**, the image processed by the front slimming unit **39** is called a front image Msi, and the image processed by the back slimming unit **40** is called a back image Bgi.

[0100] Moreover, the image extracted by the front image area extracting unit **50** is called a front image Mti, and the image extracted by the back image area extracting unit **51** is called a back image Bti.

[0101] In addition, the images recorded with the video cameras (**13** and **14**) controlled to widen the angle of view are distinguished from other images by putting the sign Z in the simultaneous display mode.

[0102] That is, the image outputted from the front video capture **34** is called a front image ZMai, the image processed by the front slimming unit **39** is a front image ZMsi, and the image extracted by the front image area extracting unit **50** is a front image ZMti.

[0103] The image outputted from the back video capture **35** is called a back image ZBai, the image processed by the back slimming unit **40** is a back image ZBsi, the image through the glare eliminator **53** is a back image ZBgi, and the image extracted by the back image area extracting unit **51** is a back image ZBti.

[0104] The main unit **21** has a central information processing unit (CPU) consisted of a processor, a microcomputer, logics, and registers, an external communication channel, a read only memory (ROM) and a random access memory (RAM) for storing an operating system and application programs to be run by the central information processing unit.

[0105] The front slimming unit **39**, the back slimming unit **40**, the first image/button transition management unit **45**, the display image selecting unit **47**, the image storing unit **48**, the back image area extracting unit **51**, the front image area extracting unit **50**, the glare eliminator **53** (the video captures may be included) shown in FIG. **7** are the application programs and are illustrated by a rectangle in the block diagram.

(Explanation of Each Unit)

[0106] The front video capture **34** stores color image signals (a image, a recorded date, a camera code, . . . : a supplementary information) per one frame sent from the front video camera **13** in the front image buffer memory **36** (or a first memory) by converting to a computer readable form linking with the image (the front image Mai or the front image ZMai).

[0107] The back video capture **35** stores color image signals (a image, a recorded date, a camera code, . . . : a supplementary information) per one frame sent from the back video camera **14** in the back image buffer memory **37** (or a second memory) by converting to the computer readable form linking with the image (the back image Bai or the back image ZBai).

[0108] The front video capture **34** and the back video capture **35** synchronize the recordings of the front video camera **13** and the rear video camera **14**.

[0109] The front slimming unit **39** outputs the slimming front image ZMsi to the display image selecting unit **47** by slimming the front image Mai (or ZMai) of the front image buffer memory **36** based on a designated slimming coefficient Ki (for instance, zero percent reduction in length and three percents reduction in width).

[0110] The back slimming unit **40** outputs the slimming back image ZBsi to a following unit by slimming the back image Bai (or ZBai) of the back image buffer memory **37** based on the designated slimming coefficient Ki (for instance, zero percent reduction in length and three percents reduction in width).

[0111] The glare eliminator **53** and the polarizing filter **14***a* may not be required.

[0112] For example, the glare eliminator **53** eliminates an irregular brightness from the back image Bsi (or ZBsi) after the steps of applying the Fourier transform to the image, removing the regular periodic component caused by the pixels of the surface, and evaluating the glare by applying the inverse Fourier transform.

[0113] A video play unit **41** plays the video images stored in the hard disk (HDD) **42**. The some video images are stored in the HDD **42**. A video menu (not shown) is displayed on the mirroring unit by switching on by the video play unit **41**. When one of the videos is selected, the selected video image (for instance, scenery, a scene of a town, or a concert, and so on) is displayed as an initial display after the system is started.

[0114] The panel controller **33** supplies X and Y axis drive signal to the touch panel **11** and outputs the touch panel coordinates (Xi,Yi) of the touched position in the touch panel **11** to the first image/button transition management unit **45**.

[0115] The first image/button transition management unit **45** manages the present image displayed on the flat panel television **10**, and determines the next image to be displayed be referring to the first transition table **46** described later when the touch panel coordinates are inputted. The determined result is outputted to the display image selecting unit **47**, and

one of the front image Mi, the back image Bi, the video image, or both the front image ZMi and the back image ZBi is displayed.

[0116] Moreover, the first image/button transition management unit **45** stores the button image in the button display memory **49***b* for the button display area **10***b* (the memory corresponding to the left side of the display of the flat panel television) when the touch panel coordinates TGi are inputted.

[0117] In addition, the first image/button transition management unit **45** instructs the image storing unit **48** to store the image in the image display memory **49***a* to display on a full area (i by m) when the video image, the front image Mi, or the back image Bi is determined to be displayed (so called the video mode, the front image mode, or the back image mode respectively).

[0118] The first image/button transition management unit **45** instructs the front and back images storing unit **52** to store the images in the image display memory **49***a* to display the front image ZMti on a half area and the back image ZBti on another half area when both the front image ZMi and the back image ZBi are determined to be displayed.

[0119] The display image selecting unit **47** outputs the front image Msi, the back image Bsi, or the video image to the image storing unit **48** corresponding to the determined result of the first image/button transition management unit **45**. When the simultaneous display of the front and back images mode is determined, the display image selecting unit **47** outputs the front image ZMsi to the front image area extracting unit **50** and outputs the back image ZBsi to the back image area extracting unit **51**.

[0120] The image storing unit **48** stores the front image Msi or the back image Bsi inputted from the display image selecting unit **47** in the image display memory **49***a* corresponding to the instruction from the first image/button transition management unit **45**.

[0121] The front image area extracting unit **50** extracts a designated extraction area of the front image ZMsi inputted from the display image selecting unit **47**, and enlarges the extracted front image to half of **1080** pixels in width (area correction), then outputs the enlarged image as a front image ZMti.

[0122] The back image area extracting unit **51** extracts a designated extraction area of the back image ZBsi inputted from the display image selecting unit **47**, and enlarges the extracted back image to half of **1080** pixels in width (area correction), then outputs the enlarged image as a back image ZBti.

[0123] The above-mentioned extraction area Tbi may be adjusted.

[0124] The display image selecting unit **47** displays the front image Msi, the back image Bsi, or the video image without the area correction when an instruction button for the simultaneous display of the front image and the back image (or the front and back images button) is not selected. And the front image ZMsi and the back image ZBsi have the area correction when the front and back images button is selected. The reason is described later.

[0125] The front and back images storing unit **52** stores the back image ZBti inputted from the back image area extracting unit **51** in the left half of the image display memory **49***a* for the display area of the flat panel television **10**, and stores the front image ZMti inputted from the front image area extracting unit **50** in the right half of the image display memory **49***a*.

[0126] The enlargement of the front image and the back image may be carried out by the front and back images storing unit **52**. To enlarge the images, enlargement size information may store to the image display memory **49***a* by outputting to the front and back images storing unit **52** with the front image ZMti and the back image ZBti. Then the image outputting unit **57** may enlarge the images base on the enlargement size information.

[0127] Next, the first image/button transition management unit **45** is explained by referring to FIG. **9**.

[0128] As shown in FIG. **9**, the first image/button transition management unit **45** has a present image name storing unit **45***a*, an image storing control data generating unit **45***b*, a mode determining unit **45***c*, and so on. In FIG. **9**, a display storing control table **46***a* and button tables **46***b* - **46***d* are illustrated in the first transition table **46**.

[0129] The display storing control table **46***a* has a displaying image name (the front image, the back image, the video, the front and back images) and a corresponded display area (a full scale, a right half scale, and a left half scale) with a name (or number) of the image display memory **49***a*.

[0130] The present image name storing unit **45***a* memorizes a present display mode name (a present image name) determined by the mode determining unit **45***c* in a memory (not shown).

[0131] The image storing control data generating unit **45***b* reads the present image name (the video, the front image, the back image, the front and back images) stored in the present image name storing unit **45***a* and finds a record having the same present image name in the display storing control table **46***a* when the image storing unit **48** or the front and back images storing unit **52** starts storing.

[0132] Then, the image storing control data generating unit **45***b* reads the display area (the full scale, the right half scale, or the left half scale) in the record and outputs to the image storing unit **48** or the front and back images storing unit **52**.

[0133] The mode determining unit **45***c* determines the mode by comparing with the present display image of the present image name storing unit **45***a* when the touch panel coordinates is inputted from the panel controller **33**.

[0134] For instance, as shown in FIG. **10**,

[0135] (1) When the current state is a power-on and the video is selected after some process is finished, the video mode is determined.

[0136] (2) When the current state is the video mode and the event is "touch", the front image mode is determined.

[0137] (3) When the current state is the front image mode and the event is "back button", the back image mode is determined.

[0138] (4) When the current state is the front image mode and the event is "front and back button", the front and back images mode is determined. (5) When the current state is the front image mode and the event is "video button", the video mode is determined.

[0139] (6) When the current state is the back image mode and the event is "video button", the video mode is determined.

[0140] (7) When the current state is the back image mode and the event is "front button", the front image mode is determined.

[0141] (8) When the current state is the front and back images mode and the event is "video button", the video mode is determined.

[0142] (9) When the current state is the front and back images mode and the event is "front button", the front image mode is determined.

[0143] (10) When the current state is the front and back images mode and the event is "back button", the back image mode is determined.

[0144] As shown in FIG. **11**, a button storing unit **45***d* selects the button table (**46***b*, **46***c* or **46***d*) corresponding to the determined result from the mode determining unit **45***c*, and stores the button corresponding to the inputted touch panel coordinates in the image display memory **49***a* to display on the button display area in the flat panel television **10**.

[0145] As shown in FIG. **12**, the button tables are a front image button table **46***b* for the front image display (FIG. **12** (*a*)), a back image button table **46***c* for the back image display (FIG. **12** (*b*)), and a front and back images button table **46***d* for the simultaneous display of the front and back images (FIG. **12** (*c*)). The button tables relate the button name (or code number) with the touch panel coordinates so that the buttons (the front button, the back button, the front and back button, and so on) are displayed on the positions designated by the touch panel coordinates.

[0146] Next, the display image selecting unit **47** is explained. FIG. **13** is an explanatory drawing to explain the display image selecting unit **47**.

[0147] As shown FIG. **13**, the display image selecting unit **47** has a first image selecting unit **47***a*, a second image selecting unit **47***b*, and a wide-angle control signal generating unit **46***c*. The wide-angle control signal generating unit **46***c* may be installed alone.

[0148] The first image selecting unit **47***a* selects the video image from the video play unit **41** and outputs the image to the image storing unit **48** when the determined result of the first image/button transition management unit **45** is the video mode.

[0149] The first image selecting unit **47***a* selects the slimming front image Msi and outputs the image to the image storing unit **48** when the determined result of the first image/button transition management unit **45** is the front image mode.

[0150] The first image selecting unit **47***a* selects the back image Bgi and outputs the image to the image storing unit **48** when the determined result of the first image/button transition management unit **45** is the back image mode.

[0151] The second image selecting unit **47***b* selects the front image ZMsi and the back image ZBgi from the front slimming unit **39** and outputs the front image ZMsi to the front image area extracting unit **50** and outputs the back image ZBgi to the back image area extracting unit **51** when the determined result of the first image/button transition management unit **45** is the front and back images mode.

[0152] The wide-angle control signal generating unit **47***c* sends the control signals for widening the view angles to the front video camera **13** and the rear video camera **14** when the determined result of the first image/button transition management unit **45** is the front and back images mode. In other words, the subject Ai is recorded small by expanding the view angle in order to be within the range of 540 pixels in width when the image is enlarged (the front image is e pixels in length by h pixels in width: about 1920 pixels, and the back image is r pixels in length by s pixels in width: about 1920 pixels).

[0153] The width of the flat panel television **10** (50 inches) is 1080 pixels and is not enough to display the images recorded by the front video camera and the rear video camera even if an unnecessary unit (right and left edges) of the image is trimmed. Then, the view angle is controlled to be wide so that the image of subject Ai becomes small in recording.

[0154] The image outputting unit **57** reads the images stored in the image display memory **49***a* and the button display memory **49***b* at certain intervals and outputs both images to the flat panel television **10**.

[0155] The CCDs of the front video camera and the rear video camera and the flat panel television **10** are 1920 pixels in length by 1080 pixels in width. Therefore, the image from the video camera is not necessary to rotate 90 degrees to display on the flat panel television **10** placed vertically. Because extra rotation process is not required, processing of the image becomes fast.

(Explanation of the Operation)

[0156] The operation of the electronic mirroring system of the embodiment 1 composed as described above is explained. The sales person (person other than the subject) may operate (or touch) the buttons displayed on the panel. Thus, a customer as the subject is able to display designated images while talking with the sales person.

[0157] FIG. **14** is a flow chart to explain the outline process of the electronic mirroring system according to the embodiment 1. FIG. **15** and FIG. **16** are transition charts of the image displayed on the display of the flat panel television **10** according to the embodiment 1.

[0158] In the embodiment 1, the front video camera **13** and the rear video camera **14**, the front video capture **34**, and the back video capture **35** are in operation. The front image Mai (of each frame) is memorized in the front image buffer memory **37** by the front video capture **34** whenever the front image Mai is sent from the front video camera **13**. The back image Bai is memorized in the back image buffer memory **38** by the back video capture **35** whenever the back image Bai is sent from the rear video camera **14**.

[0159] In the embodiment 1, the video play unit **41** plays the designated video image stored in the HDD **42** and displays on the flat panel television **10** as shown in FIG. **15** (*a*) (Si).

[0160] The processing of the video display is explained.

[0161] The some video images are stored in the HDD **42**. The video menu is displayed on the display by switching on by the video play unit **41**. When one of the videos is selected, the selected video image (for instance, scenery, a scene of a town, or a fashion show, etc.) is displayed as the initial display after the system is started.

[0162] The first image/button transition management unit **45** determines whether the touch panel coordinates is inputted from the panel controller **44** in the state (S**2**).

[0163] When the touch panel coordinates is inputted, the first image/button transition management unit **45** determines the front image mode and sends the determined result to the display image selecting unit **47**. Then, the display image selecting unit **47** executes a front image mode process in order to display the front image Mi on the flat panel television **10** as shown in FIG. **15** (*b*) (S**4**). In the embodiment, it is preferable to display the front image Mi first. In general, the person moves toward the center of a mirror when he/she looks in the mirror. Therefore, the front image is displayed first in the embodiment.

[0164] In addition, the flow chart is explained by referring to FIG. **7**.

[0165] When the front image mode is determined, the button storing unit **45***d* in the first image/button transition management unit **45** selects the front image button table **46***b* of the first transition table **46** and stores the front and back button D**1**, the back button D**2**, the video button D**3** in the button display memory **49***b* for the button display area in order to display various buttons for the front image mode with the front image Mi as shown in FIG. **17**. The process up to this step is called the front image process.

[0166] Next, the first image/button transition management unit **45** determines whether any button is selected. If no button is selected, the process is returned to the step S**4** (S**5**).

[0167] The determination of a kind of selected button is done by the mode determining unit **45***c* in the first image/button transition management unit **45**. When the inputted touch panel coordinates are found in the button tables **46***b*, **46***c* and **46***d*, the button is determined as selected.

[0168] When the button is selected and the button is determined as the front and back images button D**1** by the first image/button transition management unit **45** at the step S**5**, the front and back images mode process is executed in order to display the front image ZMi and the back image ZBi on the flat panel television **10** simultaneously as shown in FIG. **18** (S**7**).

[0169] The selection and the determination of the front and back images button D**1** are explained.

[0170] In case the front image Mi is displayed, the button storing unit **45***d* selects the front image button table **46***b*. When the inputted touch panel coordinates is matched the touch panel coordinates for the front and back images button stored in the front image button table **46***b*, the selected button is determined as the front and back images button.

[0171] When the front image button is selected in the front and back images mode (or the simultaneous display mode) shown in FIG. **18** (FIG. **15** (*c*)), the front image Mi is displayed in the front image mode as shown in FIG. **15** (*d*) (refer to FIG. **17**).

[0172] When the back image button is selected in the front and back images mode shown in FIG. **18**, the back image Bi is displayed in the back image mode as shown in FIG. **15** (*e*) (refer to FIG. **19**).

[0173] When the video button is selected in the front and back images mode shown in FIG. **18**, the video image is displayed in the video mode as shown in FIG. **15** (*f*).

[0174] When the selected button is determined as the back images button by the first image/button transition management unit **45** at the step S**6**, the back image mode process is executed in order to display the back image Bi on the flat panel television **10** as shown in FIG. **15** (*g*) (S**8**).

[0175] The details according to the mirroring back image Bi are shown in FIG. **19**.

[0176] When the front image button is selected in the back image mode (refer to FIG. **16** (*g*)), the first image/button transition management unit **45** displays the front image Mi (refer to FIG. **16** (*h*)). When the front and back images button is selected, the front and back images are displayed simultaneously (refer to FIG. **16** (*i*)). And when the video button is selected, the video image is displayed (refer to FIG. **16** (*j*)).

[0177] In case the front and back images are displayed, the button storing unit **45***d* selects the front and back images button table **46***d*. When the inputted touch panel coordinates is matched the touch panel coordinates for the back image button stored in the front and back images button table **46***d*, the selected button is determined as the back image button.

[0178] And it is judged whether the process is finished. If the process is not finished, the process is returned to the step S**5** (S**9**).

[0179] In addition, the front and back images mode process is explained.

(The Front and Back Images Mode Process)

[0180] When the mode determining unit **45***c* in the first image/button transition management unit **45** shown in FIG. **9** determines that the mode is the simultaneous display mode, the first image selecting unit **47***a* stops outputting while the second image selecting unit **47***b* selects the front image ZMsi and the back image ZBgi, and outputs the front image ZMsi and the back image ZBgi.

[0181] That is, the front image ZMsi is outputted to the front image area extracting unit **50** and the back image ZBgi is outputted to the back image area extracting unit **51**.

[0182] In case of the simultaneous display mode, the wide-angle control signal generating unit **47***c* may send the wide-angle control signals for widening the view angles to the front video camera **13** and the rear video camera **14** before selecting the front image ZMsi and the back image ZBgi. Then, the subject Ai is recorded small by widening the view angle.

[0183] The reason of the wide-angle control is explained in detail.

[0184] FIG. **20** is an explanatory drawing to explain the size of the subject recorded with the CCD (i pixels in length by m pixels in width) by the wide-angle control.

[0185] For instance, the images shown in FIG. **20** (*a*) and (*b*) are recorded with the CCD when the subject Ai standing at a designated position in front of the mirroring unit (the middle between the front and the rear) is recorded from the front and the rear.

[0186] On the other hand, the width of the flat panel television **10** placed vertically is 1080 pixels in the embodiment. If the range of 1080×1920 pixels on a light receiving surface of the CCD is extracted, the width of the flat panel television **10** must be twice 1080 pixels in order to display both images in parallel. Therefore, both the front image and the back image must be reduced before or after the images are combined, otherwise the images are not able to be displayed on the flat panel television **10** at the same time.

[0187] The background image data exists on the right and left sides and the upper and lower sides of the subject even if both reduced images are displayed on the display at the same time. And the front image and the back image of the subject become much small when both images are reduced.

[0188] Then, the subject Ai is recorded small as shown in FIG. **20** (*c*) and (*d*) by widening the view angle. The wide-angle control, for instance, is desirable to widen the view angle for reducing the size of the mirroring front image of the subject Ai (a figure only) displayed on the full scale of the flat panel television **10** from 0.75 to 0.4 size of the subject when the distance between the front video camera and the subject Ai is about one meter. The same is for the mirroring back image of the subject Ai.

[0189] The front image ZMai recorded with the wide-angle control is captured by the front video capture **34** and is memorized in the front image buffer memory **36**. Then, the front image ZMai is slimmed to make the front image ZMsi by the front slimming unit **39**.

[0190] At the same time, the back image ZBai recorded with the wide-angle control is captured by the back video capture **35** and is memorized in the back image buffer

memory **37**. Then, the back image ZBai is slimmed to make the back image ZBsi by the back slimming unit **40**. In addition, the glare is eliminated to make the back image ZBgi by the glare eliminator **53**.

[0191] The front image ZMsi is outputted to the front image area extracting unit **50** and the back image ZBgi is outputted to the back image area extracting unit **51** by the second image selecting unit **47***b* in the display image selecting unit **47**.

[0192] The front image area extracting unit **50** and the back image area extracting unit **51** apply a extraction window Tbi (for instance, a vertical window of 540 by 1680 pixels) over the front image ZMsi (i by m) as shown in FIG. **20** (*a*) by adjusting to a designated reference point (a central pixel of i by m is preferable). For instance, the number of pixels of the extraction window Tbi (a first designated area and a second designated area) may be 520 by 1600 pixels, or 600 by 1700 or 1800 pixels. The extraction window Tbi of 540 pixels by 1680 pixels is used in the embodiment. The extraction window Tbi may be same size for the both images. Or the first designated area for the front image may be large and the second area for the back image may be small. The condition may be opposite. The purpose is to correspond to several cases such as enlarging the front image, enlarging the back image, enlarging the face image only, or enlarging the head image only. As for the size of the extraction window Tbi, the size value is stored in a memory (not shown) of the front image area extracting unit **50**, the back image area extracting unit **51**, or the front and back images storing unit **52** by indicating a setting box for the size of the extraction window (not shown) by a keyboard or a mouse.

[0193] The image data in the extraction window Tbi is extracted as shown in FIG. **21** (*c*) and (*d*) (the figure area with the minimum background). The front image area extracting unit **50** and the back image area extracting unit **51** output the images (h pixels in width by e pixels in length) created by reducing or enlarging the extracted image by using a designated coefficient to display on the area of 540 pixels in width by 1920 pixels in length to the front and back images storing unit **52**. The images are the front image ZMti and the back image ZBti. The designated coefficient for the front image to reduce or to enlarge is called a third designated area. The designated coefficient for the back image to reduce or to enlarge is called a fourth designated area.

[0194] The front and back images storing unit **52** reads the display area from the image storing control data generating unit **45***b* in the first image/button transition management unit **45**. Then, the front and back images storing unit **52** stores the front image ZMti outputted from the front image area extracting unit **50** in the right half scale (540 pixels by 1680 pixels) indicated as the display area and the back image ZBgi outputted from the back image area extracting unit **51** in the left half scale (540 pixels by 1680 pixels). That is, the front and back images are stored in the image display memory **49***a* and the front image ZMi and the back image ZBi are displayed on the flat panel television **10** at the same time as shown in FIG. **21** (*e*).

[0195] On the other hand, the button storing unit **45***d* stores the front image button, the back image button, and the video button set in the selected button table in the button area **10***b* of the button display memory **49***b*.

[0196] The image outputting unit **57** reads the image display memory **49***a* and the button display memory **49***b* periodically and displays the front image ZMi and the back image ZBi on the display as shown in FIG. **21** (*e*) by processing the stored images as described above.

[0197] The wide-angle control is carried out to both video cameras in the embodiment. And the wide-angle control is optional.

[0198] In case the wide-angle control is not carried out, the front image area extracting unit **50** and the back image area extracting unit **51** may reduce the images (540 pixels in width) and may output to the front and back images storing unit **52** to display simultaneously.

[0199] The front image and the back image are displayed on the same size area of the right and left half in the embodiment 1. The size of one side may be smaller than the size of another side.

[0200] In addition, the front image area extracting unit **50** and the back image area extracting unit **51** may store the background image recorded by the front video camera and the rear video camera in advance. The image of the subject Ai may be extracted from the front image ZMai or the back image ZBgi by a differential process. When the image of the subject Ai is not in a designated size, the wide-angle control signal may be sent to the video camera (the front or the rear) that records the unsized image. Thus, the whole image of the subject Ai is extracted even if the subject Ai is not positioned at the center between the front video camera and the rear video camera. The front and back images of the subject Ai are preferable to be the designated size.

[0201] A mat installed a pressure sensor may be laid at the center between the front video camera and the rear video camera. Then, the recording of the subject may be started when the subject stands on the mat.

Embodiment 2

[0202] FIG. **22** is an outline block diagram of the electronic mirroring system according to the embodiment 2. The explanation for the one in FIG. **22** with the same sign of FIG. **7** is omitted. As shown in FIG. **22**, a front effector **62** is followed by the front slimming unit **36**. And a back effector **63** is followed by the back slimming unit **38**. In addition, a second image/button transition management unit **60** and a second transition table **61** are equipped.

[0203] The front effector **62** enlarges and reduces a part of the front image Msi (ZMsi). The back effector **63** enlarges and reduces a part of the back image Bgi (ZBgi).

[0204] The second transition table **61** relates an effect button with the touch panel coordinates of the effect button in the touch panel. This is prepared for each button table described above.

[0205] The second image/button transition management unit **60** stores effect buttons shown in FIG. **23** (*a*) in the effect display memory **49***c* to display when the touch panel coordinates indicate the effect.

[0206] For instance, as show in FIG. **23** (*b*), the image (the front or the back) is modified to the long feet figure and is displayed when the SLIM button is selected.

[0207] The image is modified to the plump figure and is displayed when the FAT button is selected.

[0208] The upper part (head) of the image is modified to big and is displayed when the HEADFAT button is selected.

[0209] The image with some time lag is generated and is displayed when the DELAY button is selected.

[0210] The image is binarized, then the white area of the image is extracted and emphasized to display when the COLOR button is selected.

[0211] The image is binarized to create a composite image with an image of a character and is displayed when the DIAMOND button is selected.

[0212] In the effect mode, the RECORD button, the CANCEL button, and the VIDEO button are displayed.

Embodiment 3

[0213] FIG. **24** is an outline block diagram of the electronic mirroring system according to the embodiment 3. The explanation for the one in FIG. **24** with the same sign of FIG. **7** is omitted. In FIG. **24**, the panel controller **33**, the image outputting unit **57**, the front video capture **34**, the back video capture **35**, the front slimming unit **39**, the back slimming unit **40**, the video play unit **41**, the front image buffer memory **36**, the back image buffer memory **37**, the hard disk **42**, the glare eliminator **53**, the front image area extracting unit **50**, the back image area extracting unit **51**, and the second image/button transition management unit **60** shown in FIG. **7** are omitted.

[0214] As shown in FIG. **24**, the electronic mirroring system in the embodiment 3 further comprises a third image/button transition management unit **70**, a front and back images record/stock/comparison unit **72**, a front image record/stock/comparison unit **86**, a back image record/stock/comparison unit **87**, a front and back images stock area storing unit **90**, a front image stock area storing unit **91**, a back image stock area storing unit **92**, a third transition table **81**, and a front and back images stock memory **82**. The supplementary information described above is stored in the front and back images stock memory **82**. The supplementary information may be displayed or may not be displayed. The setting whether the supplementary information is displayed or not is done in advance.

[0215] Moreover, a front image stock memory **83**, a back image stock memory **84**, a front and back still images memory **85** (or a simultaneous display image memory **85**), a front still image memory **78** (or a front image memory **78**), a back still image memory **79** (or a back image memory **79**), and a stock area display memory **49***d* are comprised.

[0216] The front image stock memory **83**, the back image stock memory **84**, the front and back still images memory **85** (or the simultaneous display image memory **85**), the front still image memory **78** (or the front image memory **78**), the back still image memory **79** (or the back image memory **79**), and the stock area display memory **49***d* store the supplementary information described above. The supplementary information may be displayed or may not be displayed. The setting whether the supplementary information is displayed or not is done in advance.

[0217] The image display memory **49***a*, the button display memory **49***b*, the effect display memory **49***c*, and the stock area display memory **49***d* are called a display memory **49** as a general term.

[0218] The front and back images record/stock/comparison unit **72**, the front image record/stock/comparison unit **86**, the back image record/stock/comparison unit **87**, the simultaneous display image memory **85**, the front image memory **78**, and the back image memory **79** are called an image record/stock/comparison unit **180** as a general term.

[0219] The front and back images stock area storing unit **90**, the front image stock area storing unit **91**, the back image stock area storing unit **92**, the front and back images stock memory **82**, the front image stock memory **83**, and the back image stock memory **84** are called a stock area storing unit **110** as a general term.

[0220] As shown in FIG. **25**, when the recorded front still image ZMhi (or the front still image Mhi: a sign h indicates a still image) is selected by touching the record button D**4**, the reduced front still image SZMki (or SMki: a sign k indicates a image with a low resolution) of the front still image ZMhi (or Mhi) is displayed on the stock area ST.

[0221] When the front still image SZMki (or SMki) displayed on the stock area ST is selected, the front still image ZMki (or Mki) and the back still image ZBki (or Bki) linked to the selected front still image SZMki (or SMki) are retrieved and displayed by representing with a high resolution.

[0222] As shown in FIG. **26**, the third transition table has a third front image button table **81***a* (shown as FIG. **26** (*a*)), a third back image button table **81***b* (shown as FIG. **26** (*b*)), a third front and back images button table **81***c* (shown as FIG. **27** (*a*)), and a simultaneous comparison button table **81***d* (shown as FIG. **27** (*b*)).

[0223] The tables relate the touch panel coordinates with the button name, and also relate to the process to be started.

[0224] For instance, the third front and back images button table **81***c* relates each touch panel coordinates (the button display area) with the front image button, the back image button, the video button, the comparison button, the save button, the record button, the effect button, the cancel button, and so on. The process to be started is related to the front and back images record/stock/comparison unit **72**.

[0225] Moreover, the simultaneous comparison button table **81***d* relates each touch panel coordinates with a front and back images comparison button (or a simultaneous comparison button), a front image comparison button (or a front comparison button), and a back image comparison button (or a back comparison button).

[0226] The third image/button transition management unit **70** starts the front and back images record/stock/comparison unit **72**, the front image record/stock/comparison unit **86**, or the back image record/stock/comparison unit **87** based on the mode determined by the first image/button transition management unit **45** and the second image/button transition management unit **60**.

[0227] Moreover, the third image/button transition management unit **70** retrieves the button table corresponding to the display mode determined by the mode determining unit **45***c*, and stores the buttons set in the button table in the button display memory **49***b* to display.

[0228] For instance, the third front image button table **81***a* is retrieved when the front image mode is determined. The third back image button table **81***b* is retrieved when the back image mode is determined. The third front and back images button table **81***c* is retrieved when the front and back images mode is determined. Then the buttons set in the table are stored in the button display memory **49***b* to display.

[0229] FIG. **28** (*a*) shows the buttons (the record button, the video button, the stock button, and the simultaneous comparison button) to be displayed and the mode (the simultaneous front and back record mode, the video mode, the simultaneous stock mode, and the simultaneous comparison mode) to be determined when the button is selected in the front and back images mode.

[0230] FIG. **28** (*b*) shows the button table name and the process unit to be started (the front and back images stilling unit) in the simultaneous record mode.

[0231] FIG. **28** (*c*) shows the button table name and the process unit to be started (the simultaneous front and back images stock unit) in the simultaneous stock mode.

[0232] FIG. **28** (*d*) shows the button table name and the process unit to be started (the front and back images comparison unit) in the simultaneous comparison mode.

[0233] FIG. **29** shows the button table name and the process unit to be started in each mode such as the front image record mode, the back image record mode, the front image stock mode, the front image comparison mode, the back image comparison mode.

[0234] Next, the image stock memory is explained by referring to FIG. **30**. The data of the front and back images stock memory **82** is listed in FIG. **30** (*a*).

[0235] As shown in FIG. **30** (*a*), the front and back images stock memory **82** stores a record consisted of a stock file number STfi, a stock area coordinates STGi for displaying, a stock number Sgi, a front stock image SZMki displayed on the stock area coordinates STGi, a front image file number Mfi of the front image corresponding the front stock image SZMki, a back image file number Bfi, and a back stock image SZMki. Each data of the record is created by the front and back images record/stock/comparison unit **72** described later.

[0236] As shown in FIG. **30** (*b*), the front image stock memory **83** stores a record consisted of the stock file number STfi, the stock area ST coordinates STGi, the stock number Sgi, the front stock image file number Mfi, and the front stock image SMki. Each data of the record is created by the front image record/stock/comparison unit **86** described later.

[0237] As shown in FIG. **30** (*c*), the back image stock memory **84** stores a record consisted of the stock file number STfi, the stock area ST coordinates STGi, the stock number Sgi, a back image file number Bfi, and the back stock image SBki. Each data of the record is created by the back image record/stock/comparison unit **87** described later.

[0238] FIG. **31** shows the data in the front and back still images memory **85**, in the front still image memory **78**, and in the back still image memory **79**.

[0239] As shown FIG. **31** (*a*), the front and back still images memory **85** stores a record consisted of a file number Mfi of the front still image ZMki, the front still image ZMki corresponding to the file number Mfi, a file number Bfi of the back still image ZBki, and the back still image ZBki corresponding to the file number Bfi.

[0240] As shown FIG. **31** (*b*), the front still image memory **78** stores a record consisted of the file number Mfi of the front still image Mki, and the front still image Mki corresponding to the file number Mfi.

[0241] As shown FIG. **31** (*c*), the back still image memory **79** stores a record consisted of the file number Bfi of the ack still image Bki, and the back still image Bki corresponding to the file number Bfi.

(The Explanation of Each Unit)

[0242] The third image/button transition management unit **70** retrieves the third front image button table **81***a* shown in FIG. **26** (*a*) when the first image/button transition management unit **45** determines the front image mode. Then, the third image/button transition management unit **70** starts the front image record/stock/comparison unit **86** when the touch panel coordinates TGi indicate the record button D**4**, the stock button D**6**, or the comparison button D**5**.

[0243] The third image/button transition management unit **70** retrieves the third back image button table **81***b* shown in FIG. **26** (*b*) when the first image/button transition management unit **45** determines the back image mode. Then, the third image/button transition management unit **70** starts the back image record/stock/comparison unit **87** when the touch panel coordinates TGi indicate the record button D**4**, the stock button D**6**, or the comparison button D**5**.

[0244] Moreover, the third image/button transition management unit **70** retrieves the third front and back images button table **81***c* shown in FIG. **27** (*a*) when the first image/button transition management unit **45** determines the front and back images mode. Then, the third image/button transition management unit **70** starts the front and back images record/stock/comparison unit **72** when the touch panel coordinates indicate the record button D**4**, the stock button D**6**, or the comparison button D**5**.

(The Explanation of the Front and Back Images Record/Stock/Comparison Unit **72**)

[0245] FIG. **32** is an outline block diagram of the front and back images record/ stock/comparison unit **72**.

[0246] As shown in FIG. **32**, the front and back images record/stock/comparison unit **72** comprises a front and back images stilling unit **72***a*, a front and back images stock unit **72***b*, a front image file number generating unit **72***c*, a back image file number generating unit **72***d*, a stock number generating unit **72***e*, and a front and back images comparison unit **72***f*.

[0247] The front and back images stilling unit **72***a* is started when the third image/button transition management unit **70** determines that the record button is selected in the front and back images mode.

[0248] At start, the front and back images stilling unit **72***a* reads the front image ZMti (one frame) and the back image ZBgi to store in the simultaneous display image memory **85**, then sends a stop output signal to the display image selecting unit **47**. When the images are stored in the simultaneous display image memory **85**, the resolution of each image is decreased by about 20 percents (the front still image ZMki and the back still image ZBki).

[0249] At the time, the front and back images stilling unit **72***a* starts the front image file number generating unit **72***c* and the back image file number generating unit **72***d*. Then, the front and back images stilling unit **72***a* relates the front image file number Mfi generated by the front image file number generating unit **72***c* and the back image file number Bfi generated by the back image file number generating unit **72***d* to the front still image ZMki and the back still image ZBki respectively (a front and back still images information) to store in the simultaneous display image memory **85** (refer to FIG. **31**).

[0250] The front and back images stilling unit **72***a* represents the front still image ZMki and the back still image ZBki stored in the simultaneous display image memory **85** with the high resolution (100 percents representation). Then, the front and back images stilling unit **72***a* sends the represented images to the front and back images storing unit **54** as the front still image ZMhi and the back still image ZBhi in order to store in the image display memory **49***a* for displaying on the flat panel television **10** simultaneously.

[0251] The front and back images stock unit **72***b* is started when the third image/button transition management unit **70** determines that the stock button (STOCK) is selected in the front and back images mode.

[0252] At start, the front and back images stock unit **72***b* displays the present front still image ZMhi on the stock area ST by reducing the size with the decreased resolution, and stores the back still image ZBhi displayed simultaneously by linking with the front still image ZMhi.

[0253] In detail, the front and back images stock unit **72***b* reads the front still image ZMki and the back still image ZBki having the file number Bif of the back still image linked with the front still image ZMki from the simultaneous display image memory **85**. Then, the front and back images stock unit **72***b* starts the stock number generating unit **72***e* and creates a information (a front and back images stock information) by relating the stock number Sgi described later with the stock file number STfi, the file number Mfi of the front still image ZMki and the file number Bif of the back still image ZBki stored in the simultaneous display image memory **85**, and the stock area coordinates STgi to store in the front and back images stock memory **82**.

[0254] Next, the front and back images stock unit **72***b* reads the front still image ZMki having the front image file number Mfi stored in the front and back images stock memory **82** from the front and back still images memory **85**, and outputs the image with the stock area coordinates STGi to the front and back images stock area storing unit **90** in order to display the front stock image SZMki only on the stock area ST. When the front and back images stock area storing unit **90** displays the front stock image SZMki on the stock area ST, the related stock number Sgi is generated and stored in the front and back images stock memory **82**. At the time, the third image/button transition management unit **70** changes the mode to the simultaneous display mode.

[0255] On the other hand, the image comparison unit **72***f* comprises a front and back images comparison process **72***fa*, a front image comparison process **72***fb*, and a back image comparison process **72***fc*, and a comparison area creating process **72***fd*.

[0256] The comparison area creating process **72***fd* displays a comparison area Ri having a plurality of frames at start of the front and back images comparison process **72***fa*, the front image comparison process **72***fb*, or the back image comparison process **72***fc*.

[0257] The front and back images comparison process **72***fa* is started when the third image/button transition management unit **70** determines that the front and back images comparison button is selected in the front and back images mode.

[0258] The front and back images comparison process **72***fa* reads the file number Mfi of the front still image ZMki and the file number Bfi of the back still image ZBki linked with the front stock image SZMki from the front and back images stock memory **82** whenever the front stock image SZMki displayed on the stock area ST is selected.

[0259] Then, the front and back images comparison process **72***fa* reads the front still image ZMki having the file number Mfi and the back still image ZBki having the file number Bfi from the simultaneous display image memory **85**. The front and back images comparison process **72***f* sends the images and the coordinates Ji (right frame coordinates ja, left frame coordinates jb) of the comparison area Ri to the front and back images storing unit **52** in order to display the images by arranging on the comparison area Ri in the flat panel television **10**. The coordinates Ji (right frame coordinate ja, left frame coordinate jb) corresponds to a frame number.

[0260] The front image comparison process **72***fb* is started when the third image/button transition management unit **70** determines that the front image comparison button is selected in the front and back images mode.

[0261] The front image comparison process **72***fb* reads the file number Mfi of the front still image ZMki linked with the front stock image SZMki from the front and back images stock memory **82** whenever the front stock image SZMki displayed on the stock area ST is selected.

[0262] Then, the front image comparison process **72***fb* reads the front still image ZMki having the file number Mfi from the simultaneous image display memory **85**. The front image comparison process **72***fb* sends the image and the coordinates Ji of the comparison area Ri to the front and back images storing unit **52** in order to display the image by arranging on the comparison area Ri in the flat panel television **10**.

[0263] For instance, the stock image ZMki selected first is displayed in the right frame and the stock image ZMki selected next is displayed in the left frame.

[0264] The back image comparison process **72***fc* is started when the third image/button transition management unit **70** determines that the back image comparison button (compare the back image only) is selected in the front and back images mode.

[0265] The back image comparison process **72***fc* reads the file number Bfi of the back still image ZBki linked with the front stock image SZMki from the front and back images stock memory **82** whenever the front stock image SZMki displayed on the stock area ST is selected. Then, the back image comparison process **72***fc* reads the back still image ZBki having the file number Bfi from the simultaneous display image memory **85**. The back image comparison process **72***fc* sends the image and the coordinates Ji of the comparison area Ri to the front and back images storing unit **52** in order to display the image by arranging on the comparison area Ri.

[0266] For instance, the stock image ZBki selected first is displayed in the right frame and the stock image ZBki selected next is displayed in the left frame.

(The Front Image Record/Stock/Comparison Unit **86**)

[0267] The front image record/stock/comparison unit **86** is started when it is determined that the record button is selected in the front image mode.

[0268] At start, the front image record/stock/comparison unit **86** is reads the front image Msi (one frame) and decreases the resolution of the image (−20 percents) to store in the front still image memory **78** as the front still image Mki. At the time, the front image record/stock/comparison unit **86** starts the front image file number generating unit **72***c*, and the file number Mfi is stored in the front still image memory **78** with the image.

[0269] The front image record/stock/comparison unit **86** outputs the front still image Mki (with Mfi) in the front still image memory **78** to the image storing unit **48** in order to store in the image display memory **49***a* for displaying the front still image Mhi.

[0270] When the third image/button transition management unit **70** determines that the stock button is selected in the front image mode, the front image record/stock/comparison unit **86** reads the front still image Mki having the file number Mfi of the front still image Mhi (touched the panel) from the front image memory **78**. Then, the front image record/stock/comparison unit **86** reads the stock area coordinates STgi and stores the front still image Mki as the front stock image SMki in the front image stock memory **83** by relating with the file

number Mfi and the stock area coordinates STgi (STgi, SMki, Mfi, and Sgi are called a front image stock information).

[0271] The front image record/stock/comparison unit **86** outputs the front image stock information to the front and back images stock area storing unit **90** in order to store in the stock area display memory **49***d* for displaying on the stock area ST.

[0272] When it is determined that the comparison button is selected in the front image mode, the front image record/stock/comparison unit **86** reads the front still image Mki having the file number Mfi linked with the front stock image SMki from the front image stock memory **83** whenever the front stock image SMki displayed on the stock area ST is selected. The image is displayed by arranging on the comparison area Ri having a plurality of frames.

(The Back Image Record/Stock/Comparison Unit)

[0273] The back image record/stock/comparison unit **87** is started when it is determined that the record button is selected in the front image mode.

[0274] At start, the front image record/stock/comparison unit **87** is reads the back image Bsi (one frame) and decreases the resolution of the image (−20 percents) to store in the back still image memory **79** as the back still image Bki. At the time, the back image record/stock/comparison unit **87** starts the back image file number generating unit, and the file number Bfi is stored in the back still image memory **79** with the image.

[0275] The back image record/stock/comparison unit **87** represents the back still image Bki stored in the back still image memory **79** with the high resolution (100 percents). Then, the back image record/stock/comparison unit **87** sends the represented images to the image storing unit **48** (with Bhi) in order to store in the image display memory **49***a* for displaying the back still image Bhi.

[0276] When the third image/button transition management unit **70** determines that the stock button is selected in the front image mode, the back image record/stock/comparison unit **87** reads the back still image Bki having the file number Bfi of the back still image Bhi (touched the panel) from the back image memory **79**. Then, the back image record/stock/comparison unit **87** reads the stock area coordinates STgi and stores the back still image Bki as the back stock image SBki in the back image stock memory **84** by relating with the file number Bfi and the stock area coordinates STgi (STgi, SBki, Bfi, and Sgi are called a back image stock information).

[0277] The back image record/stock/comparison unit **87** outputs the back image stock information to the front and back images stock area storing unit **90** in order to store in the stock area display memory **49***d* for displaying on the stock area ST.

[0278] When it is determined that the comparison button is selected in the back image mode, the back image record/stock/comparison unit **87** reads the back still image Bki having the file number Bfi linked with the back stock image SBki from the back image stock memory **84** whenever the back stock image SBki displayed on the stock area ST is selected. The image is displayed by arranging on the comparison area Ri having a plurality of frames.

(The Explanation of Operation)

[0279] The operations of the electronic mirroring system of the embodiment 3 composed as stated above are explained.

[0280] FIG. **33** is a flow chart to explain the process of the electronic mirroring system according to the embodiment 3. The condition for the following explanation is assumed that the mirroring front image ZMi (ZMti), the mirroring back image ZBi (ZBgi) and various buttons are displayed on the flat panel television **10** at the same time as shown in FIG. **35**, and the present mode determined by the third image/button transition management unit **70** is the front and back images mode.

[0281] As shown in FIG. **33**, the third image/button transition management unit **70** determines the present mode while each unit is in operation state (S**302** initial setting).

[0282] Next, the third image/button transition management unit **70** compares the determined result of the step S**302** with the front and back images mode (S**303**).

[0283] When the third image/button transition management unit **70** determines the front and back images mode at the step S**303**, the third image/button transition management unit **70** retrieves the third front and back images button table **81***c* (refer to FIG. **27** (*a*)) and determines whether the touch panel coordinates TGi are inputted (S**305**).

[0284] If it is confirmed that the touch panel coordinates TGi are inputted as a result of the step S**305**, the third image/button transition management unit **70** determines whether the selected button is the record button by comparing the touch panel coordinates TGi with the data in the third front and back images button table **81***c* (S**307**).

[0285] Specifically, the third image/button transition management unit **70** retrieves the third front and back images button table **81***c*, and compares the inputted touch panel coordinates TGi with the data in the third front and back images button table **81***c*. If the touch panel coordinates TGi match the coordinates corresponded to the record button, it is determined that the record button is selected in the front and back images mode.

[0286] If it is determined that the record button is selected, the third image /button transition management unit **70** starts the front and back images record/stock/comparison unit **72** to record the front image ZMti and the back image ZBgi (displaying the front still image ZMhi and the back still image ZBhi refer to FIG. **37**) (S**309**).

[0287] The simultaneous record process is explained by referring to the flow chart of FIG. **34**.

[0288] The front and back images record/stock/comparison unit **72** reads the front image ZMti (one frame) and the back image ZBgi (S**341***a* and S**341***b*).

[0289] Next, the front and back images record/stock/comparison unit **72** stores the images (the front still image ZMki and the back still image ZBki) in the front and back still images memory **85** by decreasing the each resolution by about 20 percents (S**343***a* and S**343***b*). At the time, the front and back images stilling unit **72***a* starts the front image file number generating unit **72***c* and the back image file number generating unit **72***d*. Then, the front and back images stilling unit **72***a* relates the front image file number Mfi generated by the front image file number generating unit **72***c* and the back image file number Bfi generated by the back image file number generating unit **72***d* to the front still image ZMki and the back still image ZBki respectively and stores them (S**345***a* and S**345***b*).

[0290] The front and back images stilling unit **72***a* represents the front still image ZMki and the back still image ZBki

stored in the front and back still images memory **85** with the high resolution (100 percents representation) (S**347***a* and S**347***b*).

[0291] Then, the front and back images stilling unit **72***a* sends the represented images to the front and back images storing unit **54** as the front still image ZMhi and the back still image ZBhi (S**349***a* and S**349***b*).

[0292] It is determined whether the process is finished. If the process is not yet finished, the process is returned to the step S**341***a* or S**341***b* (S**351***a* or S**351***b*).

[0293] In the meantime, the front and back images storing unit **52** reads the display area from the image storing control data generating unit **45***b* in the first image/button transition management unit **45**. Then, the front and back images storing unit **52** stores the front still image ZMhi in the right half scale (about 540 pixels in length by 1680 pixels in width) indicated as the display area and the back still image ZBhi in the left half scale (about 540 pixels in length by 1680 pixels in width) indicated as the display area from the image storing control data generating unit **45***b*.

[0294] The image output unit reads the image display memory **49***a*, the button display memory **49***b* and the effect display memory **49***c* periodically and displays both images on the flat panel television **10** as shown in FIG. **36**.

[0295] On the other hand, if the selected button is not the record button at the step **307**, the third image/button transition management unit **70** determines whether the selected button is the stock button (S**311**).

[0296] If the third image/button, transition management unit **70** determines that the stock button is selected at the step S**311**, the front and back images record/stock/comparison unit **72** executes the stock process to store the front still image ZMhi (ZMki) only on the stock area as shown FIG. **37** (S**313**).

[0297] Specifically, the front and back images stock unit **72***b* reads the front still image ZMki and the back still image ZBki having the file number Bif of the back still image linked with the front still image ZMki stored in the simultaneous display image memory **85**.

[0298] Then, the front and back images stock unit **72***b* starts the stock number generating unit **72***e* and stores the information in the front and back images stock memory **82** by relating with the stock file number STfi, the file number Mfi of the front still image ZMki, the file number Bif of the back still image ZBki, and the stock area coordinates STgi stored in the simultaneous display image memory **85**.

[0299] Next, the front and back images stock unit **72***b* reads the front still image ZMki having the front image file number Mfi stored in the front and back images stock memory **82** from the simultaneous display image memory **85**, and outputs the image with the stock area coordinates STGi to the front and back images stock area storing unit **90** in order to display the front stock image SZMki only on the stock area ST as shown in FIG. **37**.

[0300] On the stock area ST shown in FIG. **37**, the stock image SMk**1** stocked the simultaneous display of the pair of the front still image ZMh**1** and the back still image ZBh**1** is displayed. The stock image SMk**2** stocked the simultaneous display of the pair of the front still image ZMh**2** and the back still image ZBh**2** is also displayed.

[0301] In addition, the stock image SMk**3** stocked the simultaneous display of the pair of the front still image ZMh**3** and the back still image ZBh**3** is also displayed.

[0302] On the other hand, if the selected button is not the stock button at the step **311**, the third image/button transition management unit **70** determines whether the selected button is the comparison button (S**315**).

[0303] If it is determined that the comparison button is selected at the step S**315**, the third image/button transition management unit **70** retrieves the simultaneous comparison button table **81***d* (refer to FIG. **27** (*b*)) to display the various comparison buttons (the front and back images comparison button (or the simultaneous comparison button)), the front comparison button, the back comparison button, a all comparison button, and so on) (S**317**).

[0304] The front comparison button is for comparing the front images only, the back comparison button is for comparing the back images only, and the all comparison button is for displaying all the images of the front and back in a thumbnail size.

[0305] Next, it is determined whether the simultaneous comparison button is selected (S**319**). If it is determined that the simultaneous comparison button is selected at the step S**319**, the simultaneous comparison process is executed (S**321**).

[0306] The simultaneous comparison process is explained in detail.

[0307] The comparison area creating process **72***fd* of the front and back images comparison unit **72***f* displays the comparison area Ri having a plurality of frames as shown in FIG. **39** by the front and back images storing unit **52** at start. For instance, the comparison area Ri of nine frames as shown in FIG. **39** is created in the embodiment. The comparison area information (nine frames, a size of each frame, frame numbers, the right frame coordinates Jai (corresponding to the frame number), and the left frame coordinates Jbi (corresponding to the frame number)) is sent to the front and back images storing unit **52**.

[0308] The front and back images storing unit **52** stores the display area based on the comparison area information in the image display memory **49***a*. The comparison area information is stored in the memories to manage by the front and back images comparison unit **72***f* and the front and back images storing unit **52**.

[0309] The comparison area Ri may have two frames, four frames, six frames, nine frames, ten frames, twelve frames, . . . sixteen frames, . . . twenty-four frames and more.

[0310] Then, the front and back images comparison process **72***fa* reads the file number Mfl of the front still image ZMk**1** and the file number Bf**1** of the back still image ZBk**1** linked with the front stock image SZMki from the front and back images stock memory **82** whenever the front stock image SZMki displayed on the stock area ST is selected (touched).

[0311] The front still image ZMk**1** having the file number Mfl and the back still image ZBk**1** having the file number Bf**1** are read from the simultaneous display image memory **85**.

[0312] The front and back images comparison unit **72***f* also sends the coordinates Ji (right frame coordinates Jai, left frame coordinates Jbi: i=1, 2, 3, . . .) of the comparison area Ri to the front and back images storing unit **52**.

[0313] The process explained above is executed whenever the front stock image SZMk**1**, SZMk**2**, SZMk**3**, . . . on the stock area are selected.

[0314] As a result, the front stock images and the back stock images corresponding to some front stock images displayed on the stock area are displayed in parallel as shown in FIG. **39**.

[0315] Therefore, the images on the stock area are able to be compared by the front images and the back images at a glance.

[0316] In addition, when one of the frames of the comparison area Ri is touched after selecting an enlargement button, the front still image ZMhi and the back still image ZBhi are displayed as shown in FIG. **38**.

[0317] Specifically, when the third image/button transition management unit **70** determines that the enlargement button is selected, the front still image ZMk**1** having the file number linked with the frame number (for instance, the right frame coordinates Ja**1**) set in the comparison area information for the selected frame is read from the simultaneous display image memory **85**. Then, the front still image represented with the 100 percents of resolution is sent to the front and back images storing unit **52** in order to display the front still image ZMhi (refer to FIG. **40**).

[0318] When the top frame of the left side is selected, the back still image ZBk**1** having the file number linked with the frame number (for instance, the right frame coordinates Rb**1**) for the selected frame is read from the simultaneous display image memory **85**. Then, the back still image represented with the 100 percents of resolution is sent to the front and back images storing unit **52** in order to display the back still image ZBhi (refer to FIG. **40**).

[0319] When the all comparison button is selected, thumbnail frames (about 20 frames) are displayed. Then, all pairs of the front image and the back image are read from the simultaneous display image memory **85** in order to display in the thumbnail frames by every ten pairs, for instance.

[0320] On the other hand, when the front comparison button or the back comparison button is selected, the images are read from the f simultaneous display image memory **85**. Then the same process as the process of the front image record/stock/comparison unit **91** or the process of the back image record/stock/comparison unit **92** is executed.

(The Front Image Record/Stock/Comparison Unit)

[0321] The operation of the front image record/stock/comparison unit **91** is explained by referring to FIG. **41**.

[0322] When the power is turned on, the first image/button transition management unit **45** orders the display image selecting unit **47** to display the video image as the video image is selected (refer to FIG. **41** (*a*)).

[0323] When the panel is touched next, the first image/button transition management unit **45** determines that the front image mode is selected and orders the display image selecting unit **47** to select the front image Msi and to display the image and the designated buttons after stopping the video play process (refer to FIG. **41** (*b*)). The stock button, the comparison button, the video button, the record (SHOOT) button, the thumbnail (ALL VIEW) button, and so on are displayed in the embodiment.

[0324] Then, when the record button is selected, the front image record/stock/comparison unit **91** is started by the third image/button transition management unit **70**.

[0325] The front image record/stock/comparison unit **91** displays the recorded image (the front still image) as shown in FIG. **41** (*c*).

[0326] On the other hand, when the effect button is selected, the effect image is displayed by the second image/button transition management Unit as shown in FIG. **41** (*d*).

[0327] In addition, when the STOCK button is selected, the front image record/stock/comparison unit **91** displays the front still image corresponded to the present mirroring front image on the stock area by annulling the buttons in the record mode.

[0328] When the CANCEL button is selected, the still image pointed to delete is deleted from the memory **78** with annulling the buttons in the record mode.

[0329] When the comparison button is selected by touching, the comparison area is displayed and the front stock image selected on the stock area is displayed in the frame of the comparison area as shown in FIG. **41** (*f*).

[0330] In addition, when ALL VIEW button is selected, all the front still images are read from the memory and displayed in thumbnail size (refer to FIG. **41** (*g*).

Embodiment 4

[0331] The system above is explained as one example for the clothing store or a Japanese kimono store. The system as shown in FIG. **42** is possible to use in the beauty parlor or a hat shop. In FIG. **42**, a dome camera **26***b* is installed on the ceiling as the rear video camera, or the rear video camera **26** is arranged just behind the subject Ai.

[0332] The size of the flat panel television is about 32 inches or 40 inches. The front video camera is arranged above the mirroring unit **12**, or on the left side or the right side of the mirroring unit **12**.

[0333] As a result, either of the pair of the front image and the back image, the pair of the front still image and the back still image, the front image (the front still image) only, or the back image (the back still image) only is displayed on the flat panel television **10** in the beauty parlor.

[0334] When the subject sit on a chair, the front image and the back image may be recorded before having hair cut. Then, after cutting is finished, the images of before and after are able to be compared by displaying at the same time on the comparison area.

Embodiment 5

[0335] FIG. **43** is an outline block diagram of the electronic mirroring system according to the embodiment 5. The explanation for the one in FIG. **43** with the same sign of each embodiment described above is omitted.

[0336] The panel controller **33**, the image outputting unit **57**, the front video capture **34**, the back video capture **35**, the front slimming unit **39**, the back slimming unit **40**, the video play unit **41**, the front image buffer memory **36**, the back image buffer memory **37**, the hard disk **42**, the glare eliminator **53**, the front image area extracting unit **50**, the back image area extracting unit **51**, and the second image/button transition management unit **60** are omitted.

[0337] As shown in FIG. **43**, a video camera (or a part recording video camera **101**) for recording a part of the subject Ai (feet in the embodiment) is arranged. The part recording video camera **101** is connected to the main unit **20** with a cable **102** through a connector **30***f*. The part recording video camera **101** is installed in the wall on the mirroring unit side at the height of 15 centimeters to 20 centimeters facing the recording direction to the feet. In addition, the part recording video camera **101** has a CCD with the light receiving surface of 640 pixels by 480 pixels and a view angle to record the feet only.

[0338] The main unit **21** comprises a display image selecting unit **147**, a part image saving and playing unit **121**, a part

image storing unit **103**, a part image/button management unit **104**, a video capture **71**, and so on.

[0339] The display memory **49** has a part image display memory **49***e* to display a part image of feet (a feet image DGi) on the flat panel television **10**.

[0340] The part image/button management unit **104** has a table (a part image button table: not shown) relating a part image button name (a part button) for displaying the feet image with a touch panel coordinates to display the button. The part button is displayed on the button area in the front image mode, the back image mode, or the front and back images mode. When the part button is selected, the part image/button management unit **104** sends the information that the part button is selected to the display image selecting unit **147** and the part image storing unit **103**.

[0341] The display image selecting unit **147** has same function described above. Moreover, the display image selecting unit **147** outputs the image of the feet (the part image GDi) to the part image storing unit **103** by selecting with Msi, Bgi, or both Msi and Bgi when the part button is selected.

[0342] The part image storing unit **103** stores the part image GDi in the designated area of the part image display memory **49***e* to display the part image GDi (the mirroring part image GDi) by the image outputting unit.

[0343] As shown in FIG. **44**, the mirroring part image DGi is displayed near the feet between the front image and the back image in the front and back images mode.

[0344] In the front and back images mode, the location to display the part image is set in the part image storing unit **103** as an area (coordinates) according to the kind of the part image in advance. The location near the feet between both images is preferable.

[0345] In the front image mode, the location to display the part image as shown in FIG. **44** is set in the part image storing unit **103** as an area (coordinates) in advance. The part image DGi may be displayed at the height of the knees in the front and back images mode.

[0346] As shown in FIG. **44**, the part image recorded from the front is displayed with the back image so that the appearance of the shoes' back and the appearance of the shoes' front are checked at a glance. As shown in FIG. **45**, the part image may be displayed near the waist.

[0347] In the front image mode, the back image mode, or the front and back images mode, the part image saving and playing unit **120** is memorized the part image GDi (the still image) in a part image memory **121** whenever the part image GDi is outputted (for each frame) when the part image/button management unit **104** determines that the record button for the part image is selected.

[0348] The part image saving and playing unit **120** reads the file number Mfi, the file number Bfi, or both the file numbers generated by the image record/stock/comparison unit **80**. Then, the file number is saved with the part still image GDhi.

[0349] That is, both the file number Mfi and the file number Bfi are added when the record button is selected in the front and back images mode. The file number Mfi is added when the record button is selected in the front image mode. The file number Bfi is added when the record button is selected in the back image mode.

[0350] When the comparison button is selected in the front and back images mode, the part image saving and playing unit **120** reads the file number Mfi and the file number Bfi linked with the stock number Ji of the stock image selected on the stock area from the image record/stock/comparison unit **80**. Then, the part still image Dhi is sent to the part image storing unit in order to display at the location as shown in FIG. **44**.

[0351] When the comparison button is selected in the front image mode, the part image saving and playing unit **120** reads the file number Mfi linked with the stock number Ji of the stock image selected on the stock area from the image record/stock/comparison unit **80**. Then, the part still image Dhi is sent to the part image storing unit **103** in order to display at the location as shown in FIG. **44**.

[0352] When the comparison button is selected in the back image mode, the part image saving and playing unit **120** reads the file number Bfi linked with the stock number Ji of the stock image selected on the stock area from the image record/stock/comparison unit **80**. Then, the part still image Dhi is sent to the part image storing unit **103** in order to display at the location as shown in FIG. **46**.

Embodiment 6

[0353] FIG. **47** is an outline block diagram of the electronic mirroring system according to the embodiment 6. The explanation for the one in FIG. **47** with the same sign of each embodiment described above is omitted.

[0354] The panel controller **33**, the image outputting unit **57**, the front video capture **34**, the back video capture **35**, the front slimming unit **39**, the back slimming unit **40**, the video play unit **41**, the front image buffer memory **36**, the back image buffer memory **37**, the hard disk **42**, the glare eliminator **53**, the front image area extracting unit **50**, the back image area extracting unit **51**, and the second image/button transition management unit **60**, the third image/button transition management unit **70**, the part image/button management unit **104**, and the part image saving and playing unit **121** are omitted.

[0355] As shown in FIG. **47**, the main unit **21** in the electronic mirroring system according to the embodiment 6 comprises a moving image/button management unit **130**, a moving image stock/comparison unit **131**, a timer **135**, and so on.

[0356] When the third image/button transition management unit **70** determines that the mode is the front and back images record mode, the moving image/button management unit **130** stores the front image ZMai and the back image ZBgi for a designated period (a simultaneous moving images storing process).

[0357] When the play button is selected, the front image and the back image are played simultaneously (a simultaneous moving images playing process).

[0358] When the third image/button transition management unit **70** determines that the mode is the front image record mode, the moving image/button management unit **130** stores the front image ZMai for a designated period (a front moving image storing process). Then, when the play button is selected, the front image is played (a front moving image playing process).

[0359] When the third image/button transition management unit **70** determines that the mode is the back image record mode, the moving image/button management unit **130** stores the back image ZBai for a designated period (a back moving image storing process). Then, when the play button is selected, the back image is played (a back moving image playing process).

[0360] In addition, when the play button is selected in the simultaneous comparison mode, the moving image/button management unit **130** plays the selected image (the front image and the back image) on the comparison area. The

process for playing the moving images on the comparison area in the front and back images display is called a simultaneous moving images comparison playing process. The process for playing the moving image on the comparison area in the front image display is called a front moving image comparison playing process. The process for playing the moving image on the comparison area in the back image display is called a back moving image comparison playing process.

[0361] The moving image/button management unit **130** has a table (not shown) relating a moving image play button with a touch panel coordinates to display the button.

[0362] When the record button is selected in the front image mode, in the back image mode, or in the front and back images mode, the moving image stock/comparison unit **131** is started.

[0363] The moving image stock/comparison unit **131** executes the simultaneous moving images storing process, the simultaneous moving images playing process, the front moving image storing process, the front moving image playing process, the back moving image storing process, the back moving image playing process, the simultaneous moving images comparison playing process, the front moving image comparison playing process, the back moving image comparison playing process, and so on.

(The Simultaneous Moving Images Storing Process)

[0364] In the simultaneous moving images storing process, the front image ZMai and the back image ZBgi from the display image selecting unit **147** are stored in a front moving image memory for the simultaneous play **134***a* and a back moving image memory for the simultaneous play **134***b* sequentially. The front and back images record/stock/comparison unit **72** in the image record/stock/comparison unit **180** reads the file number Mfi and the file number Bfi stored in the front and back still images memory **85** with the front still image and the back still image so that the images related to the file numbers are stores one by one.

(The Simultaneous Moving Images Playing Process)

[0365] When the moving image/button management unit **130** determines that the play button is selected, the file number Mfi and the file number Bfi of the still images (the front and back) displaying at the moment is read from the front and back still images memory **85** managed by the front and back images record/stock/comparison unit **72**. Then the front moving image of the file number Mfi is read from the front moving image memory for the simultaneous play **134***a*, and the back moving image of the file number Bfi is read from the back moving image memory for the simultaneous play **134***b*. The moving images are outputted to the front and back images storing unit **52** in order to play the moving images simultaneously. The images are represented with 100 percents of the resolution at the time.

[0366] FIG. **48** (*a*) and (*b*) show an example of the moving images displayed by the simultaneous moving images playing process.

[0367] FIG. **48** (*a*) is the front still image and the back still image in the simultaneous record mode, and FIG. **48** (*b*) is playing images (moving images) of the front till image and the back still image in the simultaneous record mode. The front motion and the back motion are able to be monitored at a glance.

(The Front Moving Image Storing Process)

[0368] In the front moving image storing process, the front image ZMai from the display image selecting unit **147** is stored in a front moving image memory **132** sequentially. The front image record/stock/comparison unit **86** in the image record/stock/comparison unit **180** reads the file number Mfi stored in the front image memory **78** with the front still image so that the images related to the file numbers are stores one by one.

(The Front Moving Image Playing Process)

[0369] When the moving image/button management unit **130** determines that the play button is selected, the file number Mfi of the still image (the front and back) displaying at the moment is read from the front image memory **78** managed by the front image record/stock/comparison unit **86**. Then the back moving image of the file number Mfi is read from the front moving image memory **132**. The moving image is outputted to the image storing unit **48** in order to play the moving image. The image is represented with 100 percents of the resolution at the time.

[0370] FIG. **48** (*c*) is the front still image in the front record mode, and FIG. **48** (*d*) is a playing image (moving image) in the front record mode.

(The Back Moving Image Storing Process)

[0371] In the back moving image storing process, the back image ZBgi from the display image selecting unit **147** is stored in a back moving image memory **133** sequentially. The back image record/stock/comparison unit **87** in the image record/stock/comparison unit **180** reads the file number Bfi stored in the back still image memory **79** with the back still image so that the images related to the file numbers are stores one by one.

(The Back Moving Image Playing Process)

[0372] When the moving image/button management unit **130** determines that the play button is selected, the file number Bfi of the back still image displaying at the moment is read from the back still image memory **79** managed by the front image record/stock/comparison unit **86**. Then the back moving image of the file number Bfi is read from the back moving image memory **133**. The moving image is outputted to the image storing unit **48** in order to play the moving image. The image is represented with 100 percents of the resolution at the time.

[0373] FIG. **48** (*e*) is the back still image in the back record mode, and FIG. **48** (*f*) is a playing image (moving image) in the back record mode.

[0374] The designated period is measured by the timer **135**, and the image is recorded for ten seconds or twenty seconds, for instance. The recorded image may be stored after compression.

(The Simultaneous Moving Images Comparison Playing Process)

[0375] In case the front image of the stock area and the back image corresponded to the front image are displayed on the comparison area in the simultaneous comparison mode, the moving image stock/comparison unit **131** plays the moving image of the selected image in the selected frame of the comparison area when one of the images is selected and the play button is touched (refer to FIG. **49** (*a*) and (*b*)).

[0376] That is, the front and back images record/stock/comparison unit **72** in the image record/stock/comparison unit **180** reads the file number Mfi and the file number Bfi

linked with the frame coordinates Ji (corresponding to the frame number) of the comparison area. Then the front moving image of the file number Mfi is read from the memory **134***a*, and the back moving image of the file number Bfi is read from the memory **134***b* one by one. The moving images are outputted to the front and back images storing unit **52** in order to play the moving images for the front image and the back image on the comparison area as shown in FIG. **49** (*a*) and (*b*).

[0377] FIG. **49** (*b*) shows that the moving image for the front image is played when the front image of the frame Ja**1** is selected in FIG. **49** (*a*).

(The Front Moving Image Comparison Playing Process)

[0378] In case the front image of the stock area is displayed on the comparison area in the front image comparison mode, the moving image stock/comparison unit **131** plays the moving image of the selected image in the selected frame when one of the frames of the comparison area is selected and the play button is touched (refer to FIG. **49** (*c*) and (*d*)).

[0379] That is, the front image record/stock/comparison unit **86** in the image record/stock/comparison unit **180** reads the file number Mfi linked with the frame coordinates Ji (corresponding to the frame number) of the comparison area. Then the front moving image of the file number Mfi is read from the memory **134***a* one by one. The moving images are outputted to the image storing unit **48** in order to play the moving image for the selected front image on the comparison area as shown in FIG. **49** (*c*) and (*d*).

[0380] FIG. **49** (*d*) shows that the moving image is played when the frame Ja**1** is selected in FIG. **49** (*c*).

(The Back Moving Image Comparison Playing Process)

[0381] In case the back image of the stock area is displayed on the comparison area in the back image comparison mode, the moving image stock/comparison unit **131** plays the moving image of the selected image in the selected frame when one of the frames of the comparison area is selected and the play button is touched (refer to FIGS. **49** (*e*) and (*f*).

[0382] That is, the back image record/stock/comparison unit **87** in the image record/stock/comparison unit **180** reads the file number Bfi linked with the frame coordinates Ji (corresponding to the frame number) of the comparison area. Then the front moving image of the file number Bfi is read from the memory **79** one by one. The moving images are outputted to the image storing unit **48** in order to play the moving image for the selected back image on the comparison area as shown in FIG. **49** (*e*) and (*f*).

[0383] FIG. **49** (*f*) shows that the moving image is played when the frame Ja**1** is selected in FIG. **49** (*e*).

[0384] When an all play button is selected, all moving images are played for the front image, the back image, or the front and back images displayed in the frames of the comparison area.

[0385] The moving image may be played each time when the frame of the comparison area is selected. In addition, some moving images may be played at the same time by selecting the play button after some frames are selected.

Embodiment 7

[0386] FIG. **50** is an outline view of the electronic mirroring system according to the embodiment 7. As shown in FIG. **50**, the electronic mirroring system comprises a communication terminal **140**. A transmitting and receiving unit connected to the main unit receives a signal (an infrared signal or a radio wave signal for selecting a button instead of touching the panel). The main unit may have a function for decoding the received signal in order to send the coordinates corresponding with the button that supposed to be touched in place of the panel controller.

[0387] Thus, a target image (the front and back images, the front image, the back image, the moving image, the comparison image, and the stock image) is able to be obtained by standing toward the mirroring unit **10** even if the touch panel is not touched.

Other Embodiments

[0388] The main unit may have the following function (process unit). That is, a window for inputting sexuality (female or male) is displayed on the front still image as shown in FIG. **51** (*a*). After sexuality is inputted, a predetermined human form Ei corresponding to the inputted sexuality is displayed over the front still image as shown in FIG. **51** (*b*). The human form is able to be adjusted in height or in width manually if necessary. Then, another window for selecting clothes is displayed as shown in FIG. **51** (*c*). The virtual images of the several selected clothes may be displayed over the front still image as shown in FIG. **51** (*d*).

[0389] In addition, as shown in FIG. **52**, a plurality of the flat panel televisions is installed on the wall, and a plurality of the video cameras (the feet video camera **101**, a side video camera **152**, a chest video camera **150**, the front video camera **13**, the rear video camera **14**, and so on) is arranged to display the images recorded by each video camera on the corresponded flat panel television. That is, the electronic mirroring system comprises the main unit **21** for inputting the image from the chest video camera, the main unit **21** for inputting the image from the rear video camera, the main unit **21** for inputting the image from the side video camera, and the main unit **21** for inputting the image from the feet video camera. Then, a management unit **160** (connected a mouse **162**, a keyboard **163**, and a monitor **161**) manages the main units. The main units may do a designated operation by the instruction from the management unit **160**.

[0390] The front video camera **13** and the rear video camera **14** may be set on a platform (not shown). As shown in FIG. **53**, the subject Ai may stand at the center of the area displaying the front image when the front image is displayed on the right side in the front and back images mode.

[0391] If the subject moves away from the center of the display, the front image and the back image are out of the ranges for both images.

[0392] To avoid such situation, as shown in FIG. **53**, the wide-angle control signal generating unit **47***c* moves the platforms for the front video camera **13** and the rear video camera **14** horizontally when the wide-angle control signal is sent in the front and back images mode.

[0393] In other words, the wide-angle control signal generating unit **47***c* generates the control signal to move the optical axis to the central axis of the area displaying the front image and one meter from the display, for instance.

[0394] As a result, even if the subject moves toward the area displaying the front image, the front and back images are displayed in the display of 1080 pixels by 1920 pixels at the same time.

[0395] Either of the back image or the front image may be displayed in small size, or be displayed at the upper part or the lower part, or be displayed diagonally.

[0396] Moreover, another front video camera (540 by 1920) may be arranged at the same position of the front video camera **13** (1080 by 1920), and also another rear video camera (540 by 1920) may be arranged at the same position of the rear video camera **14** (1080 by 1920). Then, the images is able to be outputted to the front and back images storing unit **52** without processing by the front image area extracting unit **50** and the back image area extracting unit **51**.

[0397] The front still image ZMhi and the back still image ZBhi memorized in the memory **85**, the front still image Mhi memorized in the memory **78**, the back still image Bhi memorized in the memory **79**, the thumbnail image and the image on the comparison area are stored in other memories (not shown) by relating to the date, the time, the name of the user, and the name of the staffs. When the date, the time, and the name of the user (user code) are inputted, the front still image ZMhi, the back still image ZBhi, the front still image Mhi, the back still image Bhi, the thumbnail image and the image on the comparison area stored in the memories mentioned above are read by a reading unit (not shown), then the image is printed out by a printing device (or a printer) (not shown).

[0398] Although the units of each means according to the present invention in the embodiments are described below as an example, the units of each means are not limited by the following description. The method having the processes executed by each means is also included in the present invention.

[0399] A first means comprises the front video capture **34** and the front image buffer memory **36**.

[0400] A second means comprises the back video capture **35** and the back image buffer memory **37**.

[0401] A third means comprises the display image selecting unit **47**, the image storing unit **48**, the image display memory **49***a*, and the image outputting unit **57**.

[0402] A fourth means comprises the image/button transition management unit **45**, the display image selecting unit **47**, and the wide-angle control signal generating unit **47***c*.

[0403] A fifth means corresponds to the front image area extracting unit **50**, and a sixth means corresponds to the back image area extracting unit **51**.

[0404] A seventh means comprises the front image area extracting unit **50**, the front and back images storing unit **52**, and the image outputting unit **57**.

[0405] A eighth means comprises the back image area extracting unit **51**, the front and back images storing unit **52**, and the image outputting unit **57**.

[0406] A ninth means, a tenth means, and a eleventh means comprise the front image area extracting unit **50** and the front and back images storing unit **52** respectively.

[0407] The twelfth means corresponds to the third image/button transition management unit **70**.

[0408] A thirteenth means comprises the front and back images stilling unit **72***a*, the front and back images storing unit **52**, the back image area extracting unit **51**, and the image outputting unit **57**.

[0409] A fourteenth means comprises the front and back images stock unit **72***b* and the front and back images stock memory **82**.

[0410] A fifteenth means comprises the front and back images stock unit **72***b*, the front and back images stock area storing unit **90**, the back image area extracting unit **51**, and the image outputting unit **57**.

[0411] A sixteenth means comprises the front and back images stock unit **72***b*, the front and back images stock area storing unit **90**, the stock area display memory **49***d*, and the image outputting unit **57**.

[0412] A seventeenth means corresponds to the comparison area creating process **72***fd*, an eighteenth means corresponds to the back image comparison process **72***fc*, and a nineteenth means corresponds to the video capture **71**.

[0413] A twentieth means comprises the display image selecting unit **47**, the part image storing unit **103**, the part image display memory **49***e*, and the image outputting unit **57**.

[0414] A twenty-first means, a twenty-second means, and a twenty-third means comprise the part image storing unit **103** and the part image/button management unit **104**.

[0415] A twenty-fourth means corresponds to the moving image stock/comparison unit **131** shown in FIG. **47**.

[0416] A twenty-fifth means comprises the moving image stock/ comparison unit **131**, the front and back images storing unit **52**, the image display memory **49***a*, and the image outputting unit **57**.

[0417] A twenty-sixth means and a twenty-seventh means correspond to the wide-angle control signal generating unit **47***c*.

[0418] A twenty-eighth means comprises the front slimming unit **39** and the back slimming unit **40**.

[0419] A twenty-ninth means corresponds to the glare eliminator **53** shown in FIG. **7**.

1. An electronic mirroring system for interlockingly displaying images of a person as a subject taken from multiple directions, the electronic mirroring system comprising:

a mirroring unit including a display of i pixels in length by m pixels in width and a touch panel provided on the display, the mirroring unit being arranged in front of the subject;

a front video camera having a CCD of i pixels in length by m pixels in width and a wide-angle control for widening a view angle and being arranged on a side of the mirroring unit for taking a front image of the subject, the front video camera being configured to output a frame of an image taken without the wide-angle control as a first front image and another frame of an image taken with the wide-angle control as a second front image;

a rear video camera having a CCD of i pixels in length by m pixels in width and a wide-angle control for widening a view angle and being arranged behind the subject for taking a back image of the subject, the rear video camera being configured to output a frame of an image taken without the wide-angle control as a first back image and another frame of an image taken with the wide-angle control as a second back image;

a first unit configured to capture the first front image or the second front image outputted from the front video camera;

a second unit configured to capture the first back image or the second back image outputted from the rear video camera;

a third unit configured to output to the mirroring unit and displaying display the first front image on the display while stopping input of the first back image or the second back image;

a fourth unit configured to send a wide-angle control signal to the front video camera and the rear video camera in order to widen view angles while canceling the stopping

of the input by the third means unit in response to an instruction for interlocking display of the front image and the back image;

a fifth unit configured to extract an image of a first range including the subject therein from the second front image and output the extracted image as an extracted front image in response to the instruction for interlocking display;

a sixth unit configured to extract an image of a second range including a back of the subject therein from the second back image and output the extracted image as an extracted back image in response to the instruction for interlocking display;

a seventh unit configured to change the extracted front image outputted from the fifth unit to a size of e pixels in length by h pixels in width smaller than the size of i pixels in length by m pixels in width of the display and display the changed image as a mirroring front image on a first area in the display; and

a eighth unit configured to change the extracted back image outputted from the sixth unit to a size of r pixels in length by s pixels in width smaller than the size of i pixels in length by m pixels in width of the display and display the changed image as a mirroring back image on a second area different from the first area in the display.

2. The electronic mirroring system according to claim **1**, further comprising a ninth unit configured to set an about half area of the display of i pixels in length by m pixels in width as the first area and another about half area of the display of i pixels in length by m pixels in width as the second area for displaying the mirroring front image and the mirroring back image in a same size.

3. The electronic mirroring system according to claim **1**, further comprising a tenth unit configured to set the size of r pixels in length by s pixels in width smaller than the size of e pixels in length by h pixels in width for interlockingly displaying the mirroring back image smaller than the mirroring front image.

4. The electronic mirroring system according to claim **1**, further comprising an eleventh unit configured to set the size of e pixels in length by h pixels in width smaller than the size of r pixels in length by s pixels in width for interlockingly displaying the mirroring front image smaller than the mirroring back image.

5. The electronic mirroring system according to claim **1**, further comprising:

a twelfth unit configured to create a stock area on a side of the display;

a thirteenth unit configured to display still images taken from the mirroring front image and the mirroring back image on the display in response to a record instruction when the mirroring front image and the mirroring back image are being displayed;

a fourteenth unit configured to store the still image of the mirroring front image and the still image of the mirroring back image being displayed in an image stock memory with linking each other in response to a stock instruction when the still images of the mirroring front image and the mirroring back image are being displayed on the display;

a fifteenth unit configured to reduce only the still image of the mirroring front image read from the image stock memory and display the reduced image as a selectable stock image on the stock area; and

a sixteenth unit configured to, upon every selection of stock images, change the still image of the mirroring front image of a selected stock image to the size of e pixels in length by h pixels in width, change the still image of the mirroring back image linked with the still image of the mirroring front image of the selected stock image to the size of r pixels in length by s pixels in width, and display both the still images as changed on the display.

6. The electronic mirroring system according to claim **5**, further comprising:

a seventeenth unit configured to display a comparison area having frames on the display in response to a comparison instruction; and

an eighteenth unit configured to, upon every selection of stock images being displayed on the stock area, display a selected stock image by enlarging in a first frame of the comparison area, and display the still image of the mirroring back image linked with the still image of the mirroring back image of the selected stock image read from the image stock memory by enlarging in a second frame adjacent to the first frame.

7. The electronic mirroring system according to claim **5**, further comprising:

a part video camera for taking an image of a part of the subject;

a nineteenth unit configured to capture a part image outputted from the part video camera;

a twentieth unit configured to display the captured part image on the display;

a twenty-first unit configured to display a still image taken from the part image in response to a record instruction;

a twenty-second unit configured to store the still image of the part image being displayed linked to the mirroring front image and the mirroring back image in the image stock memory in response to the stock instruction when the still image of the part image is being displayed; and

a twenty-third unit configured to, upon selection of the stock image, display the part image with at least one of the still image of the mirroring front image and the still image of the mirroring back image linked to the still image of the part image on the display.

8. The electronic mirroring system according to claim **1**, further comprising:

a twenty-fourth unit configured to store at least one of the mirroring front image and the mirroring back image for a prescribed period in a moving image memory; and

a twenty-fifth unit configured to, upon interlocking display of a front image and a back image of the subject, change the mirroring front image stored in the moving image memory to the size of e pixels in length by h pixels in width while changing the mirroring back image stored in the moving image memory to the size of r pixels in length by s pixels in width, and display both the changed images on the display, and, upon display of one of the mirroring front image and the mirroring back image of the subject, change one of the mirroring front image and the mirroring back image stored in the moving image memory within the size of i pixels in length by m pixels in width and display the changed image on the display.

9. The electronic mirroring system according to claim **1**, further comprising:

a first platform and a second platform configured to rotatably support the front video camera and the rear video

camera respectively, the first platform and a second platform being movable horizontally;

a twenty-sixth unit configured to, upon interlocking display of a front image and a back image of the subject, send a first platform control signal in order to move the first platform so that a central optical axis of the front video camera coincides with a vertical central axis of an area of the display for the front image; and

a twenty-seventh unit configured to, upon interlocking display of the front image and the back image of the subject, send a second platform control signal in order to move the second platform so that a central optical axis of the back video camera coincides with a vertical central axis of another area of the display for the back image.

10. The electronic mirroring system according to claim **1**, further comprising a twenty-eighth unit configured to slim the first front image and the first back image by reducing transversely.

11. The electronic mirroring system according to claim **1**, further comprising a twenty-ninth unit configured to eliminate a glare from the first back image.

12. The electronic mirroring system according to claim **1**, wherein the display of the mirroring unit is a flat panel television placed vertically or horizontally.

13. A program to be executed by a computer in an electronic mirroring system including

a mirroring unit including a display of i pixels in length by m pixels in width and a touch panel provided on the display, the mirroring unit being arranged in front of the subject,

a front video camera having a CCD of i pixels in length by m pixels in width and a wide-angle control for widening a view angle and being arranged on a side of the mirroring unit for taking a front image of the subject, the front video camera being configured to output a frame of an image taken without the wide-angle control as a first front image and another frame of an image taken with the wide-angle control as a second front image, and

a rear video camera having a CCD of i pixels in length by m pixels in width and a wide-angle control for widening a view angle and being arranged behind the subject for taking a back image of the subject, the rear video camera being configured to output a frame of an image taken without the wide-angle control as a first back image and another frame of an image taken with the wide-angle control as a second back image, the program comprising:

(a) storing the first front image or the second front image outputted from the front video camera in a first memory;

(b) storing the first back image or the second back image outputted from the back video camera in a second memory;

(c) outputting to the mirroring unit and displaying the first front image on the display while stopping an input of the first back image or the second back image;

(d) sending a wide-angle control signal to the front video camera and the rear video camera in order to widen view angles while canceling the stopping of the input in the step (c) in response to an instruction for interlocking display of the front image and the back image;

(e) extracting an image of a first range including the subject therein from the second front image and outputting the extracted image as an extracted front image in response to the instruction for interlocking display;

(f) extracting an image of a second range including the back of the subject therein from the second back image and outputting the extracted image as an extracted back image in response to the instruction for interlocking display;

(g) changing the extracted front image outputted in the step (e) to a size of e pixels in length by h pixels in width smaller than the size of i pixels in length by m pixels in width of the display and displaying the changed image as a mirroring front image on a first area in the display; and

(h) changing the extracted back image outputted in the step (f) to a size of r pixels in length by s pixels in width smaller than the size of i pixels in length by m pixels in width of the display and displaying the changed image as a mirroring back image on a second area different from the first area in the display.

14. The program according to claim **13**, further comprising:

(i) creating a stock area on a side of the display;

(j) displaying still images taken from the mirroring front image and the mirroring back image on the display in response to a record instruction when the mirroring front image and the mirroring back image are being displayed;

(k) storing the still image of the mirroring front image and the still image of the mirroring back image being displayed in an image stock memory with linking each other in response to a stock instruction when the still images of the mirroring front image and the mirroring back image are being displayed on the display;

(l) reducing only the still image of the mirroring front image read from the image stock memory and displaying the reduced image as a selectable stock image on the stock area;

(m) upon every selection of stock images, changing the still image of the mirroring front image of a selected stock image to the size of e pixels in length by h pixels in width, changing the still image of the mirroring back image linked with the still image of the mirroring front image of the selected stock image to the size of r pixels in length by s pixels in width, and displaying both the still images as changed on the display;

(n) displaying a comparison area having frames on the display in response to a comparison instruction; and

(o) upon every selection of stock images being displayed on the stock area, displaying a selected stock image by enlarging in a first frame of the comparison area, and displaying the still image of the mirroring back image linked with the still image of the mirroring front image of the selected stock image read from the image stock memory by enlarging in a second frame adjacent to the first frame.

15. A method for an electronic mirroring system including

a mirroring unit including a display of i pixels in length by m pixels in width and a touch panel provided on the display, the mirroring unit being arranged in front of the subject,

a front video camera having a CCD of i pixels in length by m pixels in width and a wide-angle control for widening a view angle and being arranged on a side of the mirror-

ing unit for taking a front image of the subject, the front video camera being configured to output a frame of an image taken without the wide-angle control as a first front image and another frame of an image taken with the wide-angle control as a second front image, and

a rear video camera having a CCD of i pixels in length by m pixels in width and a wide-angle control for widening a view angle and being arranged behind the subject for taking a back image of the subject, the rear video camera being configured to output a frame of an image taken without the wide-angle control as a first back image and another frame of an image taken with the wide-angle control as a second back image, the method comprising:

capturing the first front image or the second front image outputted from the front video camera;

capturing the first back image or the second back image outputted from the back video camera;

outputting to the mirroring unit and displaying the first front image on the display while stopping input of the first back image or the second back image;

sending a wide-angle control signal to the front video camera and the rear video camera in order to widen view angles while canceling the stopping of the input in the third step in response to an instruction for interlocking display of the front image and the back image;

extracting an image of a first range including the subject therein from the second front image and outputting the extracted image as an extracted front image in response to the instruction for interlocking display;

extracting an image of a second range including the back of the subject therein from the second back image and outputting the extracted image as an extracted back image in response to the instruction for interlocking display;

changing the extracted front image as outputted to a size of e pixels in length by h pixels in width smaller than the size of i pixels in length by m pixels in width of the display and displaying the changed image as a mirroring front image on a first area in the display; and

changing the extracted back image as outputted to a size of r pixels in length by s pixels in width smaller than the size of i pixels in length by m pixels in width of the display and displaying the changed image as a mirroring back image on a second area different from the first area in the display.

* * * * *