US008150808B2

(12) **United States Patent**
Zha et al.

(10) **Patent No.: US 8,150,808 B2**
(45) **Date of Patent: Apr. 3, 2012**

(54) **VIRTUAL DATABASE SYSTEM**

(75) Inventors: **Charles Li Zha**, Palo Alto, CA (US); **Jedidiah Yueh**, Menlo Park, CA (US)

(73) Assignee: **Delphix Corp.**, Menlo Park, CA (US)

(*) Notice: Subject to any disclaimer, the term of this patent is extended or adjusted under 35 U.S.C. 154(b) by 285 days.

(21) Appl. No.: **12/603,541**

(22) Filed: **Oct. 21, 2009**

(65) **Prior Publication Data**

US 2011/0093435 A1 Apr. 21, 2011

(51) **Int. Cl.**
G06F 17/00 (2006.01)

(52) **U.S. Cl.** **707/639**; 707/609; 707/661; 707/821; 707/E17.01; 711/161

(58) **Field of Classification Search** ..... None
See application file for complete search history.

(56) **References Cited**

U.S. PATENT DOCUMENTS

5,634,053	A *	5/1997	Noble et al.	1/1
5,680,618	A *	10/1997	Freund	1/1
7,197,491	B1 *	3/2007	Chou et al.	1/1
7,269,607	B2 *	9/2007	Cotner et al.	1/1
7,779,051	B2 *	8/2010	Friedlander et al.	707/810
7,895,228	B2 *	2/2011	Cragun et al.	707/769
2002/0143764	A1 *	10/2002	Martin et al.	707/8
2003/0204597	A1 *	10/2003	Arakawa et al.	709/226
2004/0054648	A1	3/2004	Mogi et al.	
2005/0114701	A1 *	5/2005	Atkins et al.	713/201
2007/0219959	A1	9/2007	Kanemasa	
2009/0080398	A1	3/2009	Mahany et al.	
2009/0132611	A1	5/2009	Brown et al.	
2009/0144224	A1	6/2009	Phan et al.	
2009/0177697	A1 *	7/2009	Gao et al.	707/104.1
2009/0292734	A1	11/2009	Miloushev et al.	
2011/0004586	A1 *	1/2011	Cherryholmes et al.	707/682

OTHER PUBLICATIONS

Prasad et al, "Virtual Database Technology, XML, and the Evolution of the Web", IEEE, 1998.*
Rajaraman et al, "Virtual Database Technology: Transforming the Internet into a Database", IEEE, 1998.*
Sathish Sadagopan, "Introduction to WebSphere Federation Server", IBM Data Management Solutions, 2005.*
http://www.db2dean.com/Previous/VirtualDB.html, "Virtual Databases", Jan. 2008.*
Wilson et al, "Multiple Virtual Databases to Support Multiple VOS in R-GMA", 2006.*
PCT International Search Report and Written Opinion, PCT/US2010/052963, Dec. 10, 2010, 16 Pages.

(Continued)

Primary Examiner — Hung Le
(74) *Attorney, Agent, or Firm* — Fenwick & West LLP

(57) **ABSTRACT**

Information from multiple databases is retrieved and stored on a database storage system. Multiple point-in-time copies are obtained for each database. A point-in-time copy retrieves data changed in the database since the retrieval of a previous point-in-time copy. A virtual database (VDB) is created by creating a set of files in the data storage system. Each file in the set of files created for a VDB is linked to the database blocks on the database storage system associated with a point-in-time copy of the source database. The set of files associated with the VDB are mounted on a database server allowing the database server to read from and write to the set of files. Workflows based on VDBs allow various usage scenarios based on databases to be implemented efficiently, for example, testing and development, backup and recovery, and data warehouse building.

57 Claims, 25 Drawing Sheets

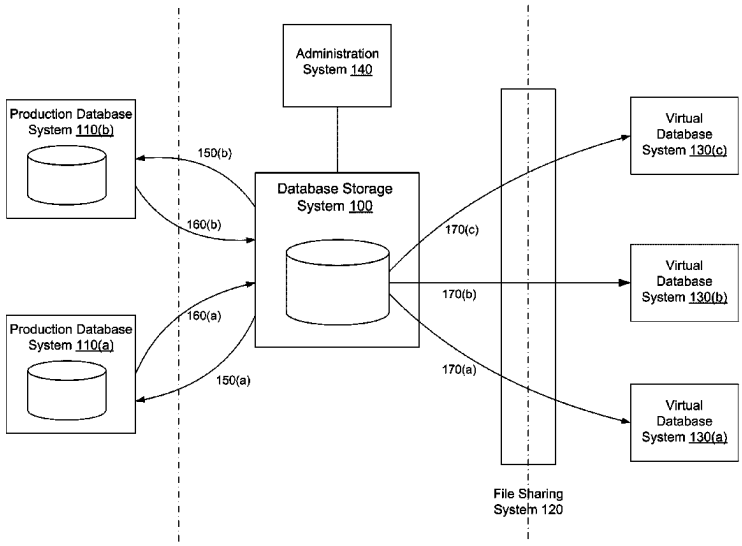

Tessell Exhibit 1006
Tessell v. Nutanix

OTHER PUBLICATIONS

PCT International Search Report and Written Opinion, PCT/US2010/052960, Dec. 10, 2010, 17 Pages.
PCT International Search Report and Written Opinion, PCT/US2010/060536, Feb. 28, 2011, 12 Pages.
"FlexVol™ abd FlexClone™ Software," Datasheet, Network Appliance, Inc., 2004, 2 Pages.
"FlexClone" Datasheet, Network Appliance, Inc., 2008, 2 Pages.
"NetApp SnapMirror," Datasheet, Network Appliance, Inc., 2008, 2 Pages.
"NetApp Snapshot Technology," Datasheet, Network Appliance, Inc., 2004, 1 Page.
"NetApp SnapManager for Oracle," Datasheet, Network Appliance, Inc., 2008, 2 Pages.
Meeks, J., "An Oracle Technical White Paper-Oracle Data Guard with Oracle Database 11g Release 2," Oracle, Sep. 2009, 20 Pages.
U.S. Appl. No. 12/603,545, filed Oct. 21, 2009, 104 pages.
U.S. Appl. No. 12/647,337, filed Dec. 24, 2009, 58 pages.

* cited by examiner

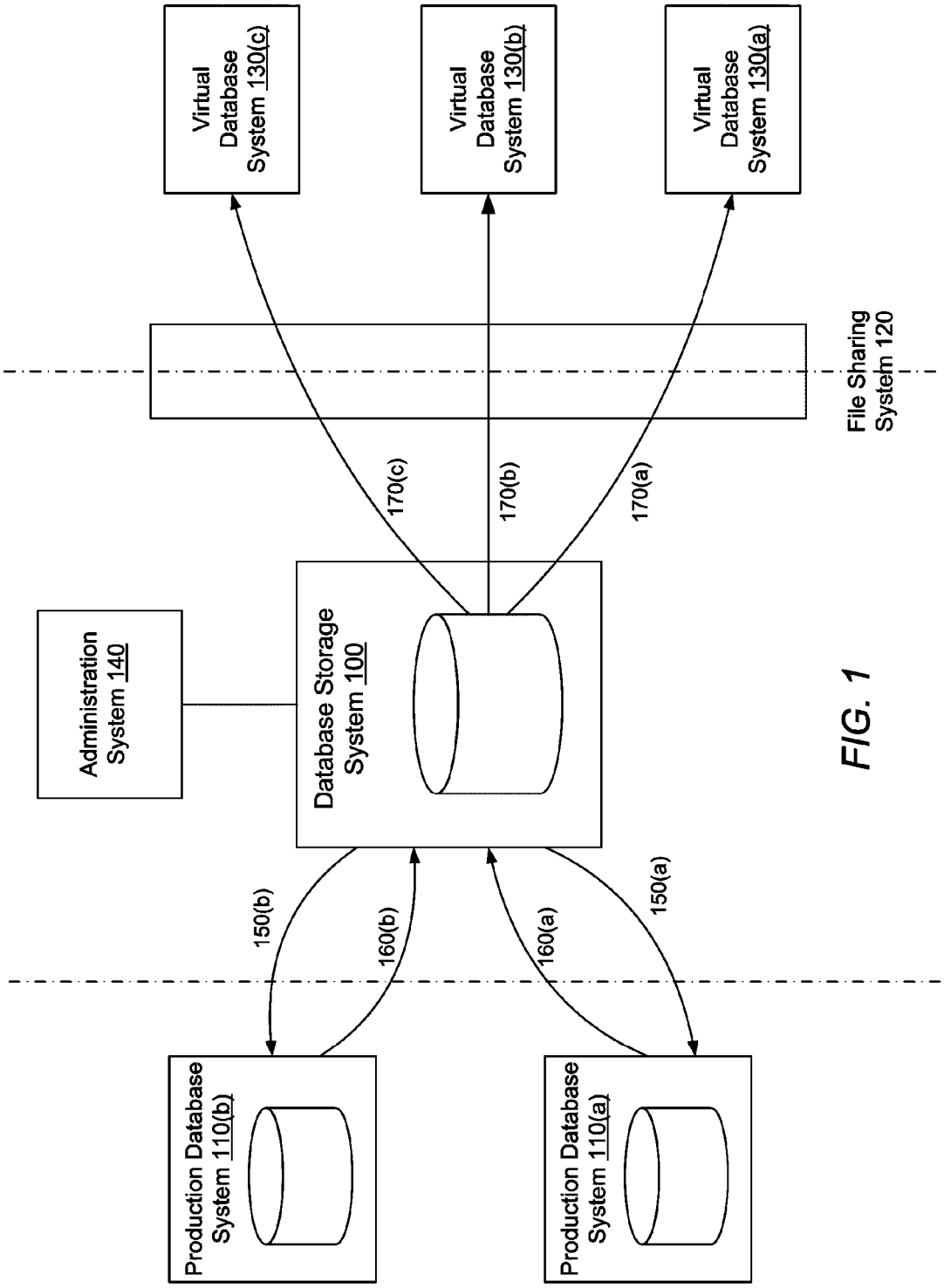
Virtual Database System 130(c)
Virtual Database System 130(b)
Virtual Database System 130(a)
File Sharing System 120
170(c)
170(b)
170(a)
Administration System 140
Database Storage System 100
150(b)
160(b)
160(a)
150(a)
Production Database System 110(b)
Production Database System 110(a)

FIG. 1

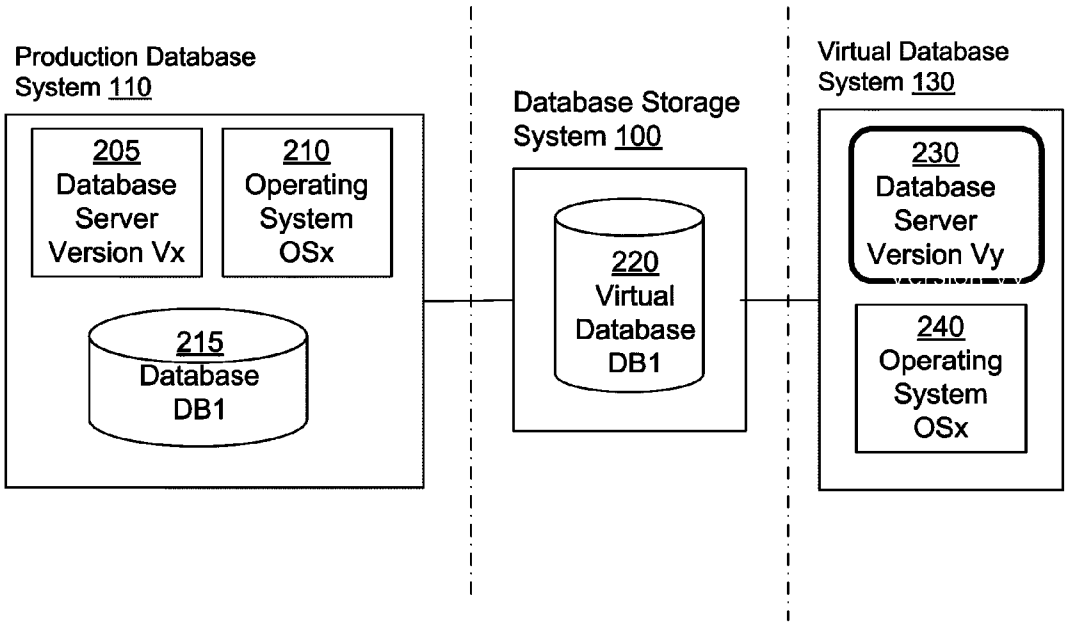
Production Database System 110
205 Database Server Version Vx
210 Operating System OSx
215 Database DB1
Database Storage System 100
220 Virtual Database DB1
Virtual Database System 130
230 Database Server Version Vy
240 Operating System OSx

FIG. 2(a)

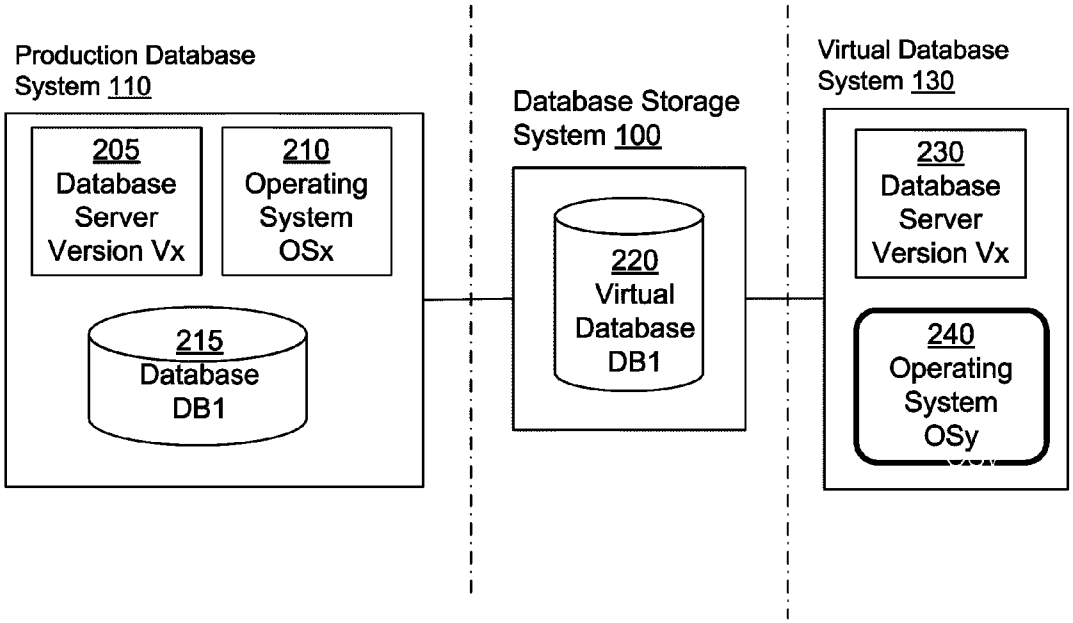
Production Database System 110
205 Database Server Version Vx
210 Operating System OSx
215 Database DB1
Database Storage System 100
220 Virtual Database DB1
Virtual Database System 130
230 Database Server Version Vx
240 Operating System OSy

FIG. 2(b)

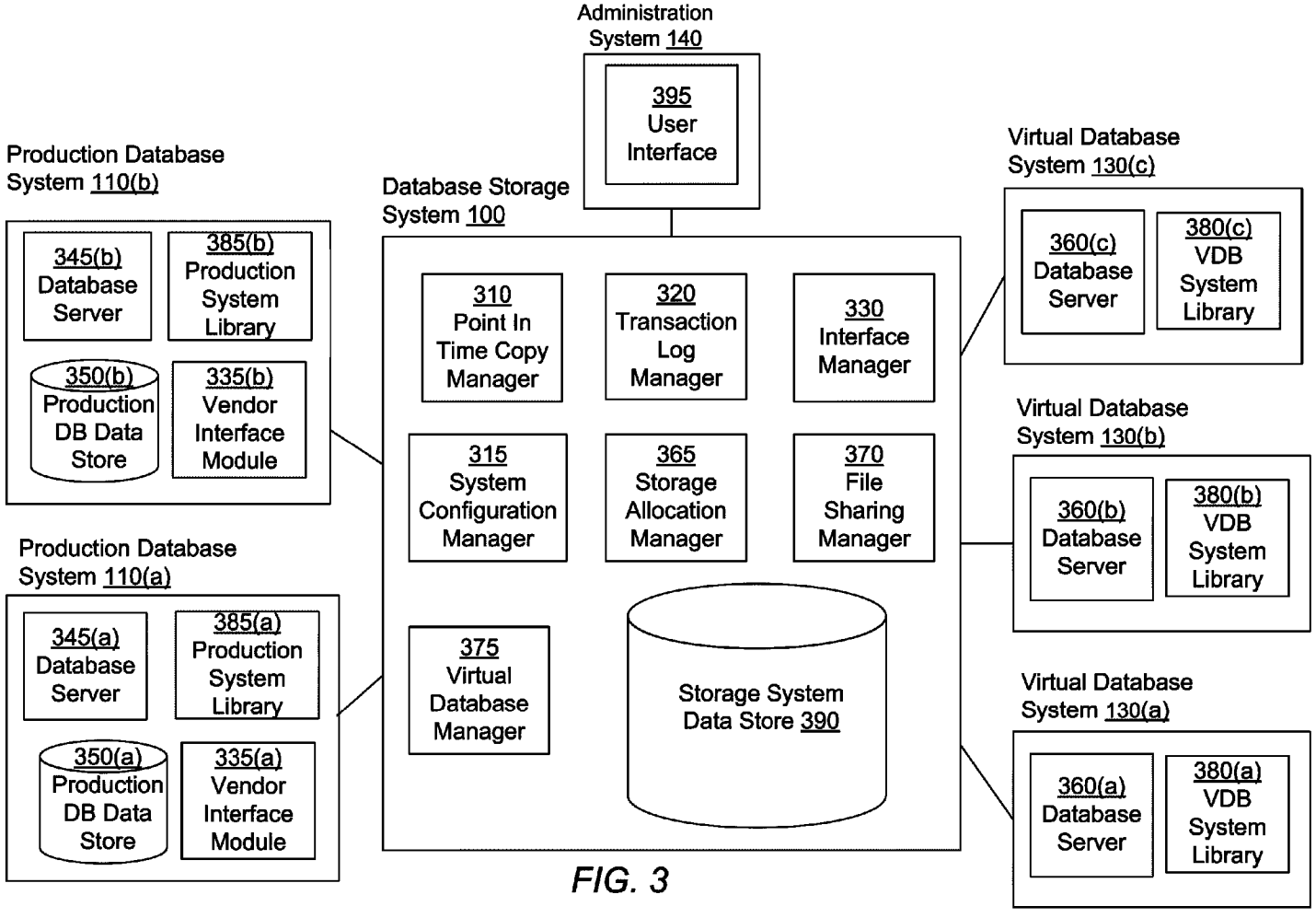
Administration System 140
395 User Interface
Production Database System 110(b)
345(b) Database Server
385(b) Production System Library
350(b) Production DB Data Store
335(b) Vendor Interface Module
Production Database System 110(a)
345(a) Database Server
385(a) Production System Library
350(a) Production DB Data Store
335(a) Vendor Interface Module
Database Storage System 100
310 Point In Time Copy Manager
320 Transaction Log Manager
330 Interface Manager
315 System Configuration Manager
365 Storage Allocation Manager
370 File Sharing Manager
375 Virtual Database Manager
Storage System Data Store 390
Virtual Database System 130(c)
360(c) Database Server
380(c) VDB System Library
Virtual Database System 130(b)
360(b) Database Server
380(b) VDB System Library
Virtual Database System 130(a)
360(a) Database Server
380(a) VDB System Library

FIG. 3

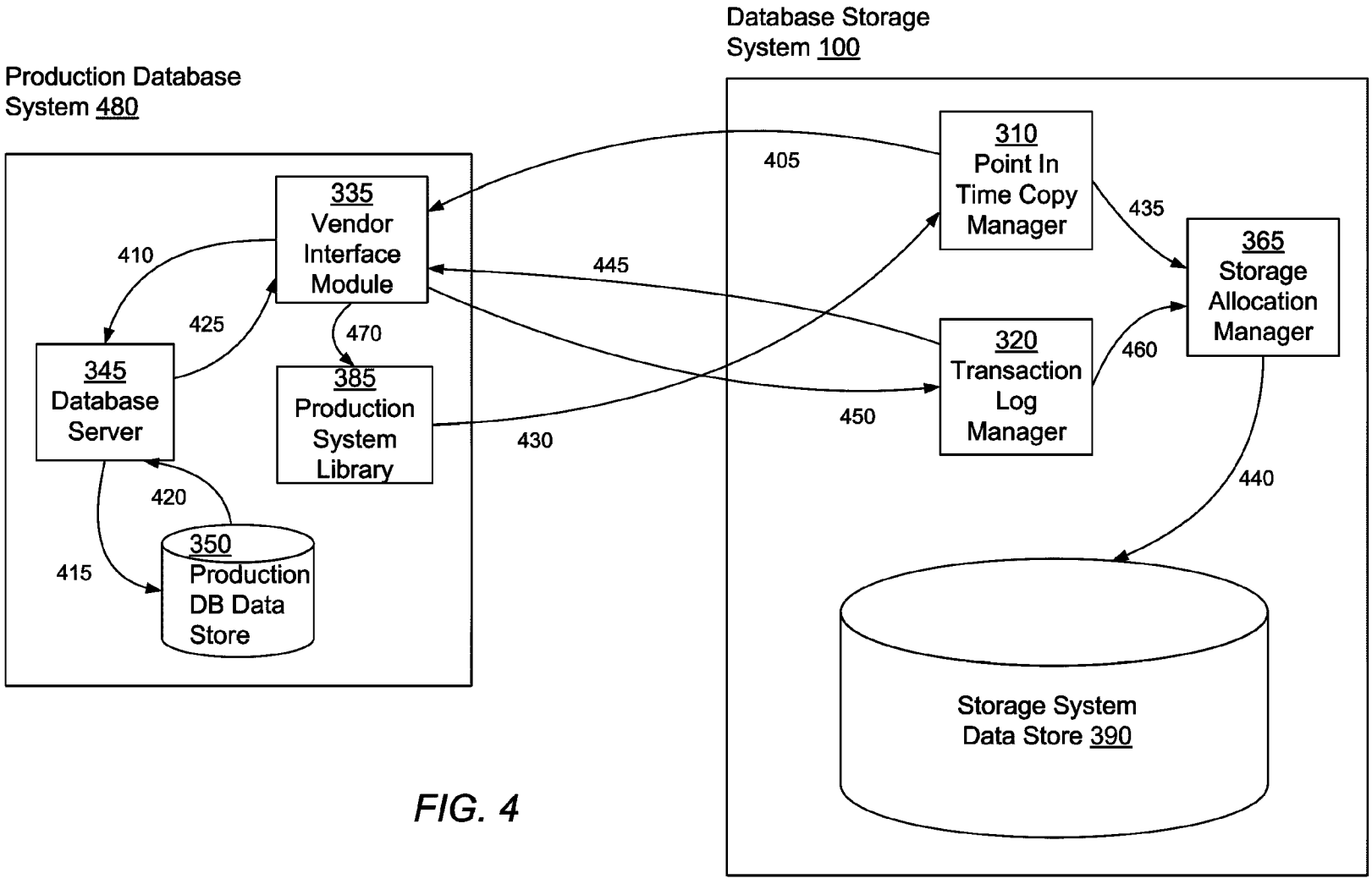
Production Database System 480
Database Storage System 100
335 Vendor Interface Module
345 Database Server
385 Production System Library
350 Production DB Data Store
310 Point In Time Copy Manager
320 Transaction Log Manager
365 Storage Allocation Manager
Storage System Data Store 390
405
410
415
420
425
430
435
440
445
450
460
470

FIG. 4

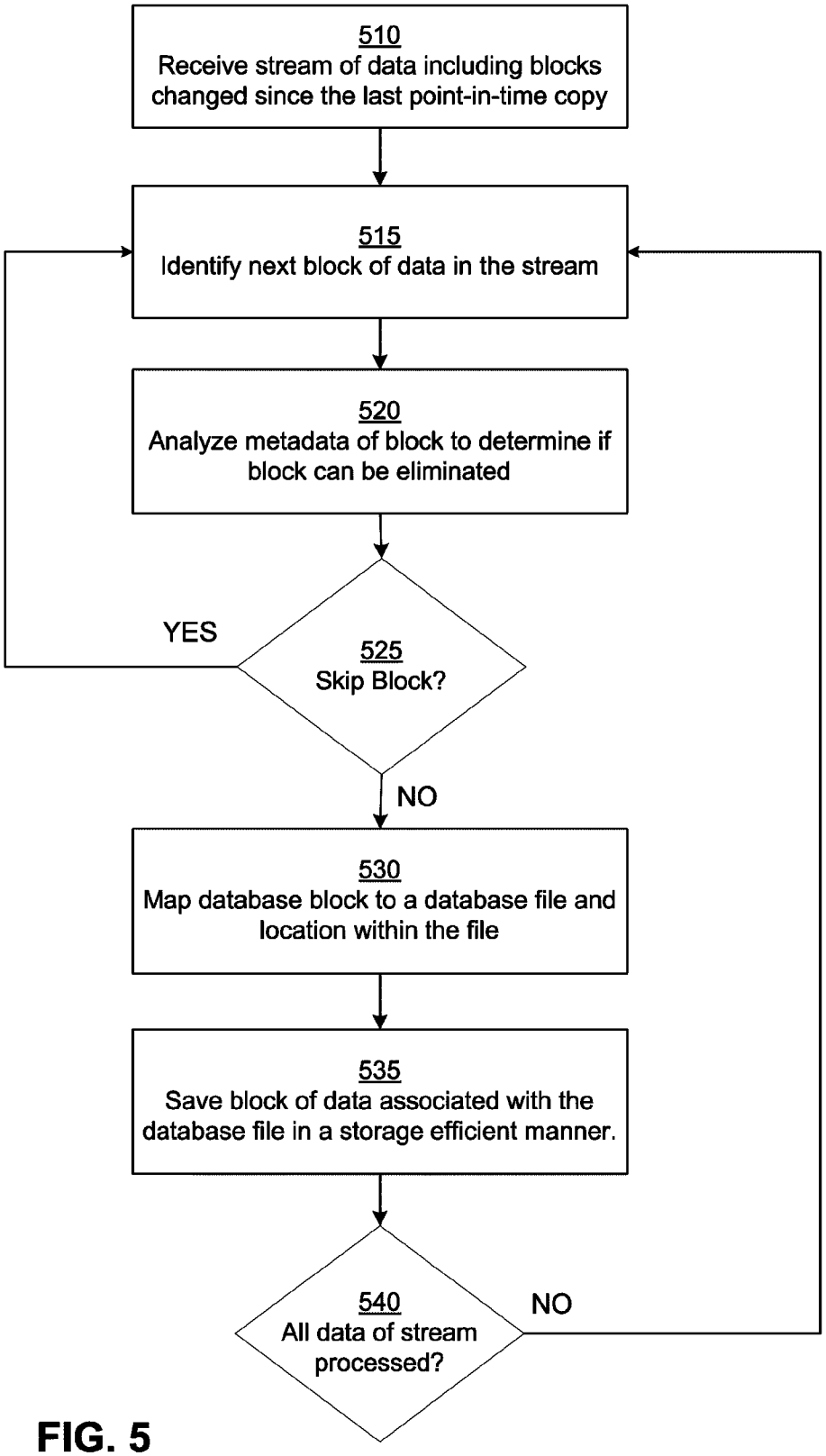
510
Receive stream of data including blocks changed since the last point-in-time copy
515
Identify next block of data in the stream
520
Analyze metadata of block to determine if block can be eliminated
525
Skip Block?
YES
NO
530
Map database block to a database file and location within the file
535
Save block of data associated with the database file in a storage efficient manner.
540
All data of stream processed?
NO

FIG. 5

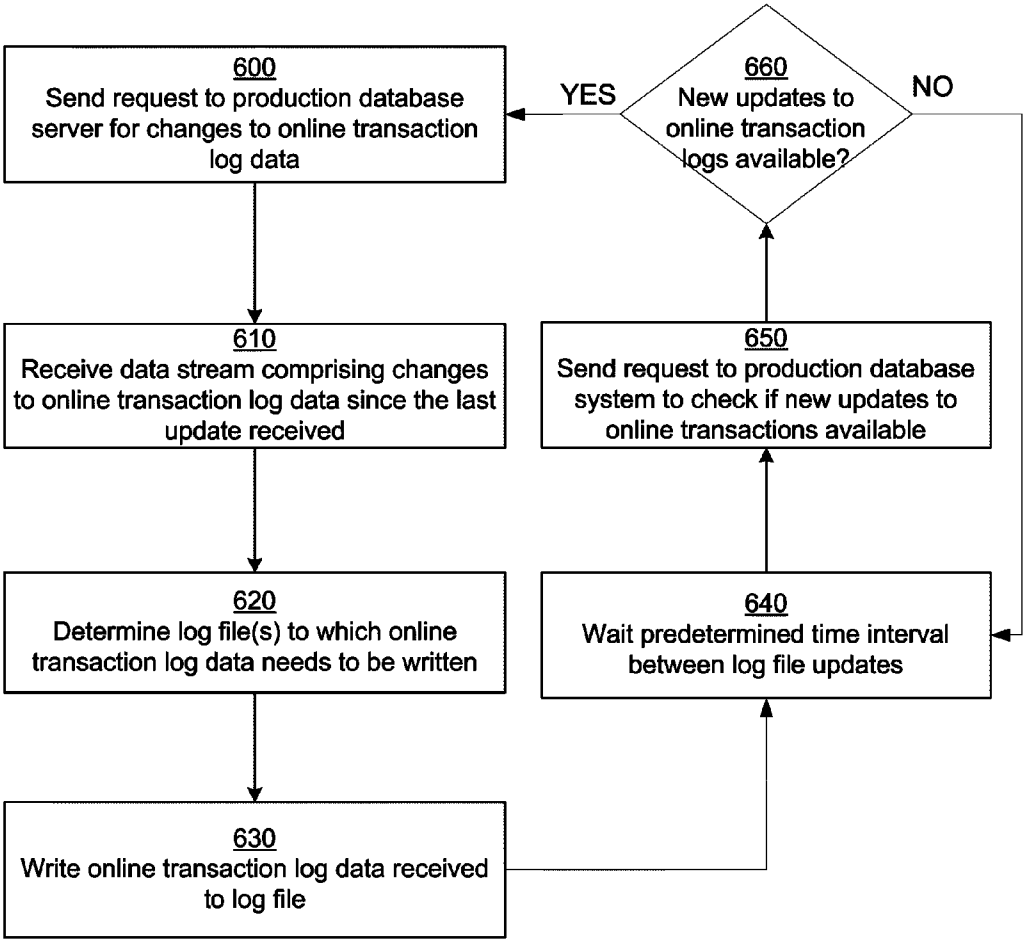
600
Send request to production database server for changes to online transaction log data
YES
660
New updates to online transaction logs available?
NO
610
Receive data stream comprising changes to online transaction log data since the last update received
650
Send request to production database system to check if new updates to online transactions available
620
Determine log file(s) to which online transaction log data needs to be written
640
Wait predetermined time interval between log file updates
630
Write online transaction log data received to log file

FIG. 6

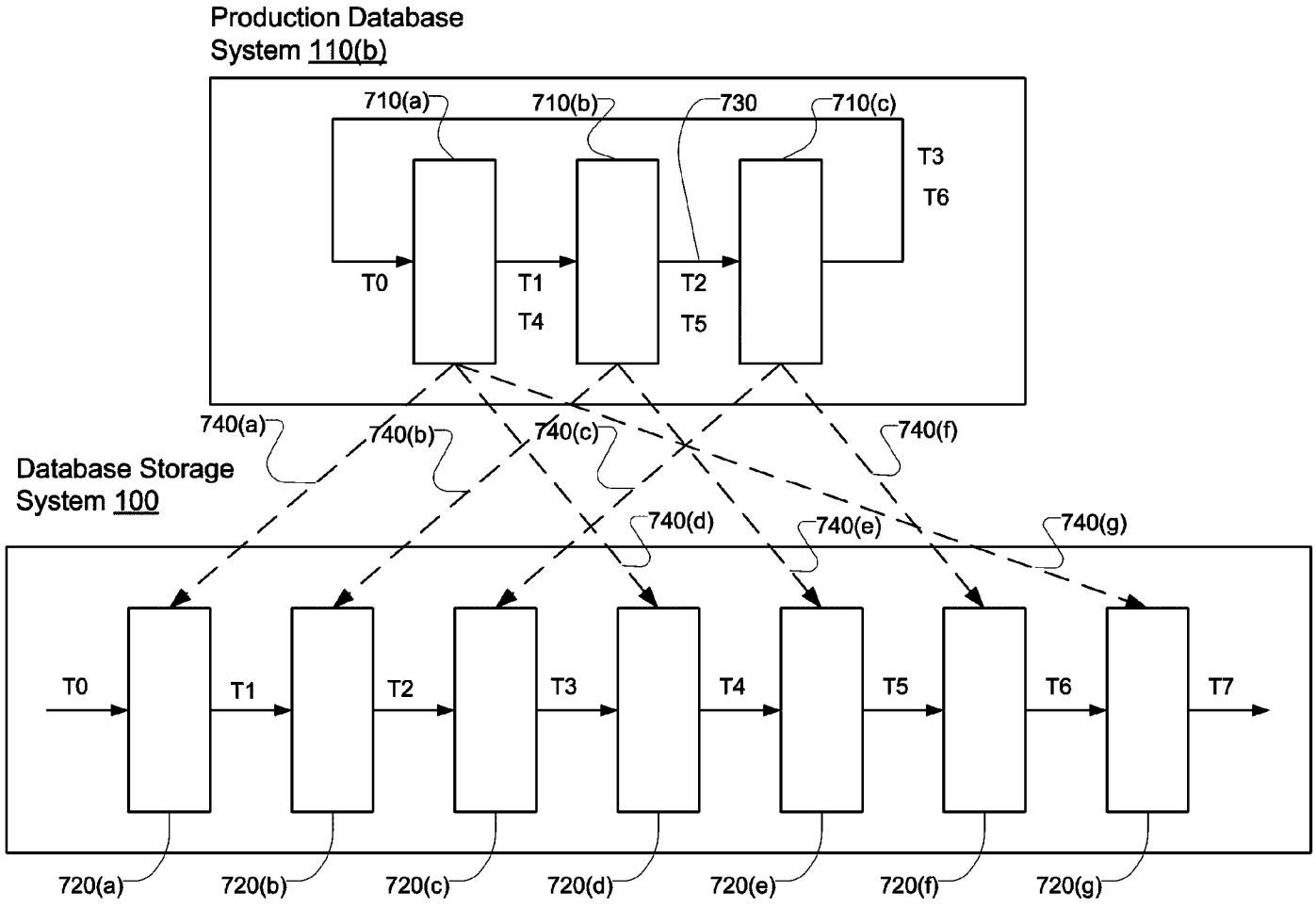
Production Database
System 110(b)
710(a)
710(b)
730
710(c)
T3
T6
T0
T1
T4
T2
T5
740(a)
740(b)
740(c)
740(f)
Database Storage
System 100
740(d)
740(e)
740(g)
T0
T1
T2
T3
T4
T5
T6
T7
720(a)
720(b)
720(c)
720(d)
720(e)
720(f)
720(g)

FIG. 7

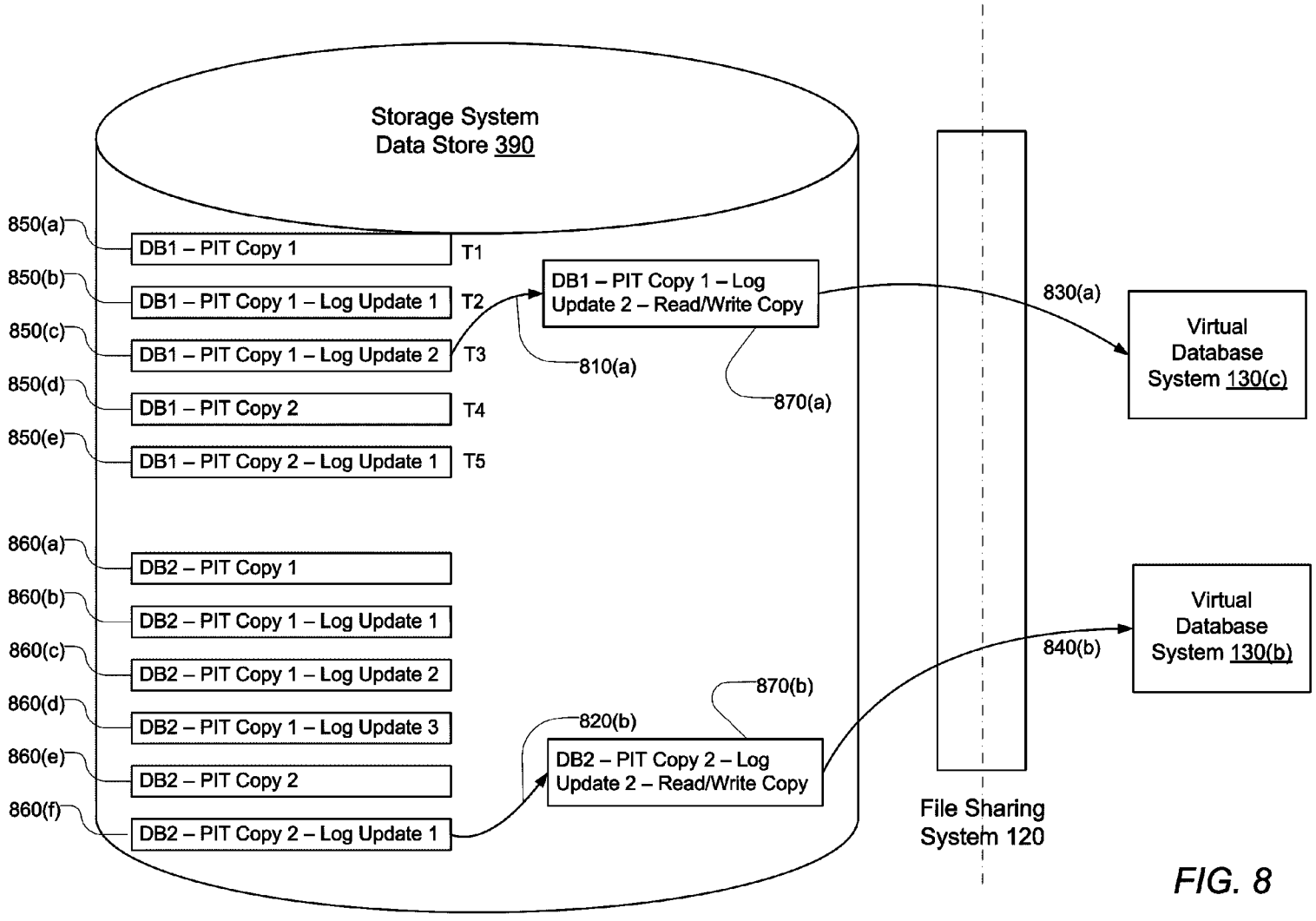
Storage System
Data Store 390
850(a)
DB1 – PIT Copy 1
T1
850(b)
DB1 – PIT Copy 1 – Log Update 1
T2
850(c)
DB1 – PIT Copy 1 – Log Update 2
T3
850(d)
DB1 – PIT Copy 2
T4
850(e)
DB1 – PIT Copy 2 – Log Update 1
T5
860(a)
DB2 – PIT Copy 1
860(b)
DB2 – PIT Copy 1 – Log Update 1
860(c)
DB2 – PIT Copy 1 – Log Update 2
860(d)
DB2 – PIT Copy 1 – Log Update 3
860(e)
DB2 – PIT Copy 2
860(f)
DB2 – PIT Copy 2 – Log Update 1
DB1 – PIT Copy 1 – Log Update 2 – Read/Write Copy
810(a)
870(a)
DB2 – PIT Copy 2 – Log Update 2 – Read/Write Copy
820(b)
870(b)
830(a)
840(b)
File Sharing System 120
Virtual Database System 130(c)
Virtual Database System 130(b)

FIG. 8

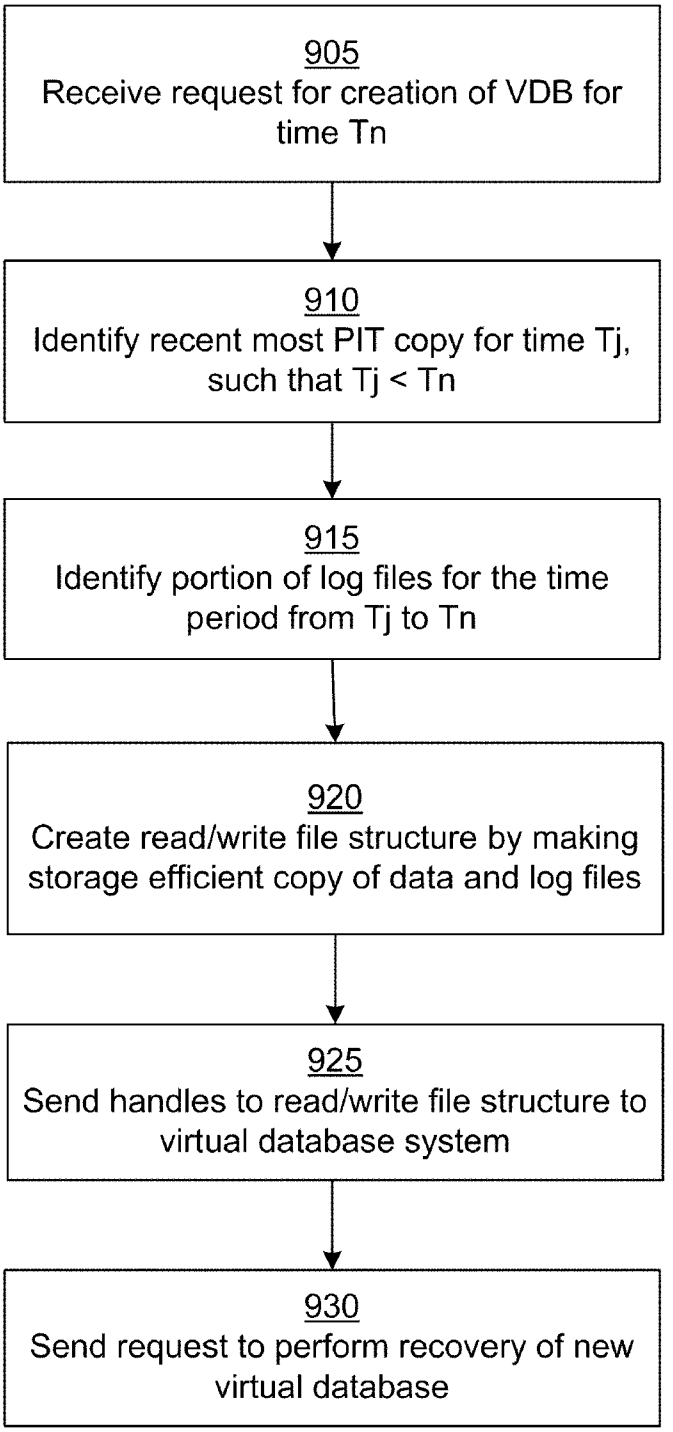
905
Receive request for creation of VDB for time Tn
910
Identify recent most PIT copy for time Tj, such that Tj < Tn
915
Identify portion of log files for the time period from Tj to Tn
920
Create read/write file structure by making storage efficient copy of data and log files
925
Send handles to read/write file structure to virtual database system
930
Send request to perform recovery of new virtual database

FIG. 9

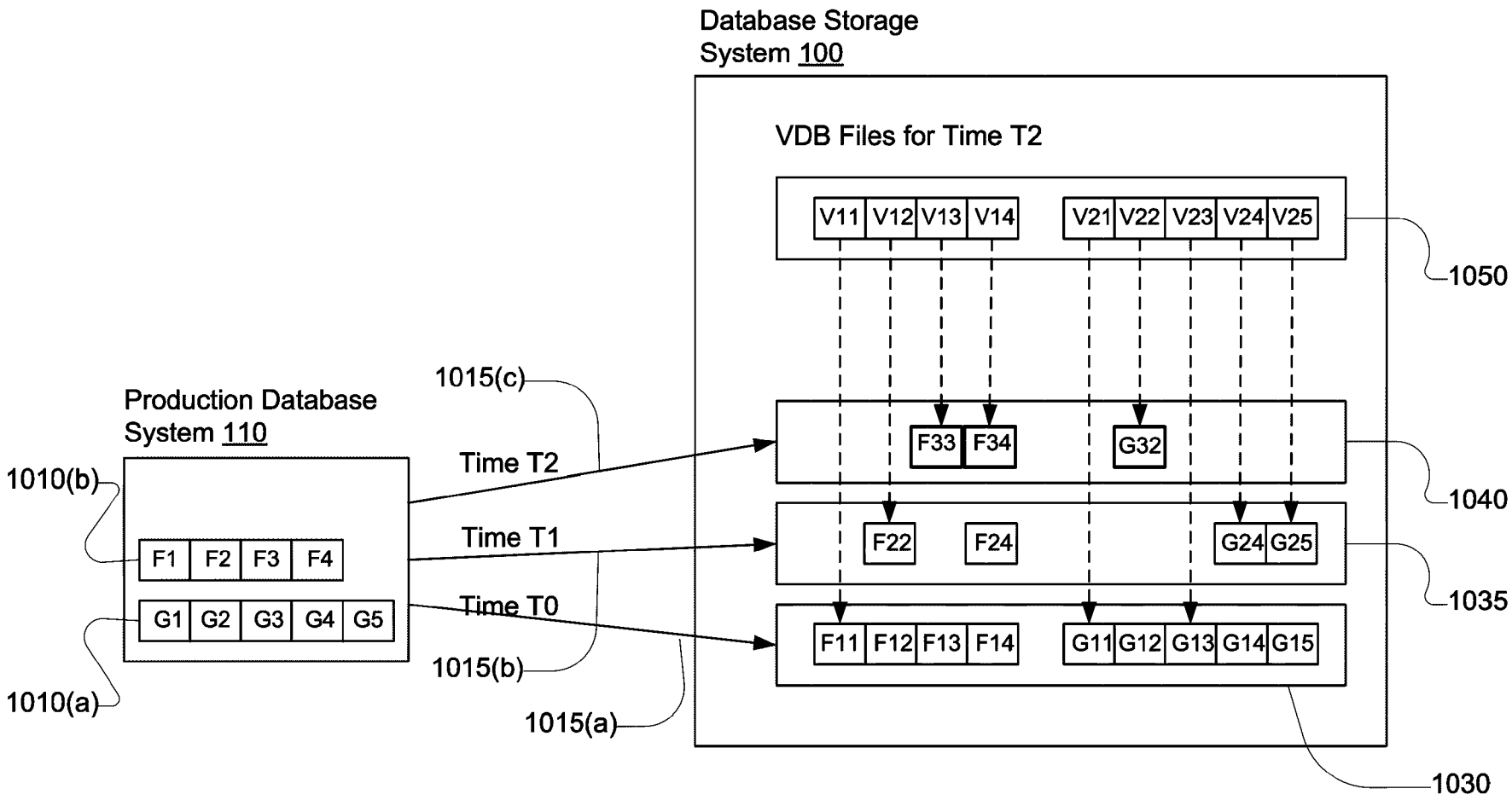
Database Storage System 100
VDB Files for Time T2
V11 V12 V13 V14 V21 V22 V23 V24 V25
1050
F33 F34 G32
1040
F22 F24 G24 G25
1035
F11 F12 F13 F14 G11 G12 G13 G14 G15
1030
Production Database System 110
1010(b)
F1 F2 F3 F4
G1 G2 G3 G4 G5
1010(a)
1015(c)
Time T2
Time T1
Time T0
1015(b)
1015(a)

FIG. 10

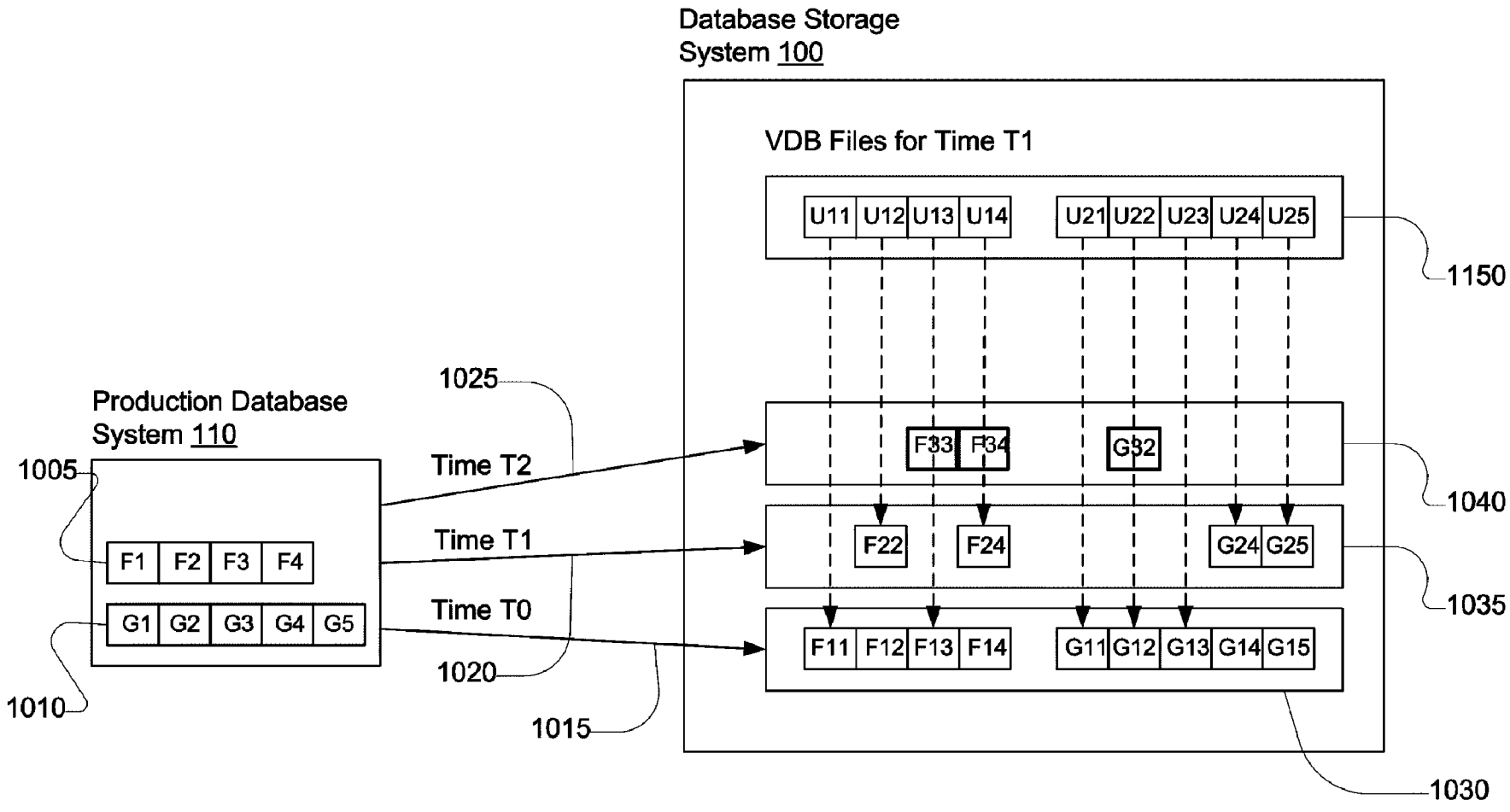
Database Storage System 100
VDB Files for Time T1
U11 U12 U13 U14 U21 U22 U23 U24 U25
1150
F33 F34 G32
1040
F22 F24 G24 G25
1035
F11 F12 F13 F14 G11 G12 G13 G14 G15
1030
Production Database System 110
1005
F1 F2 F3 F4
G1 G2 G3 G4 G5
1010
1025
Time T2
Time T1
Time T0
1020
1015

FIG. 11

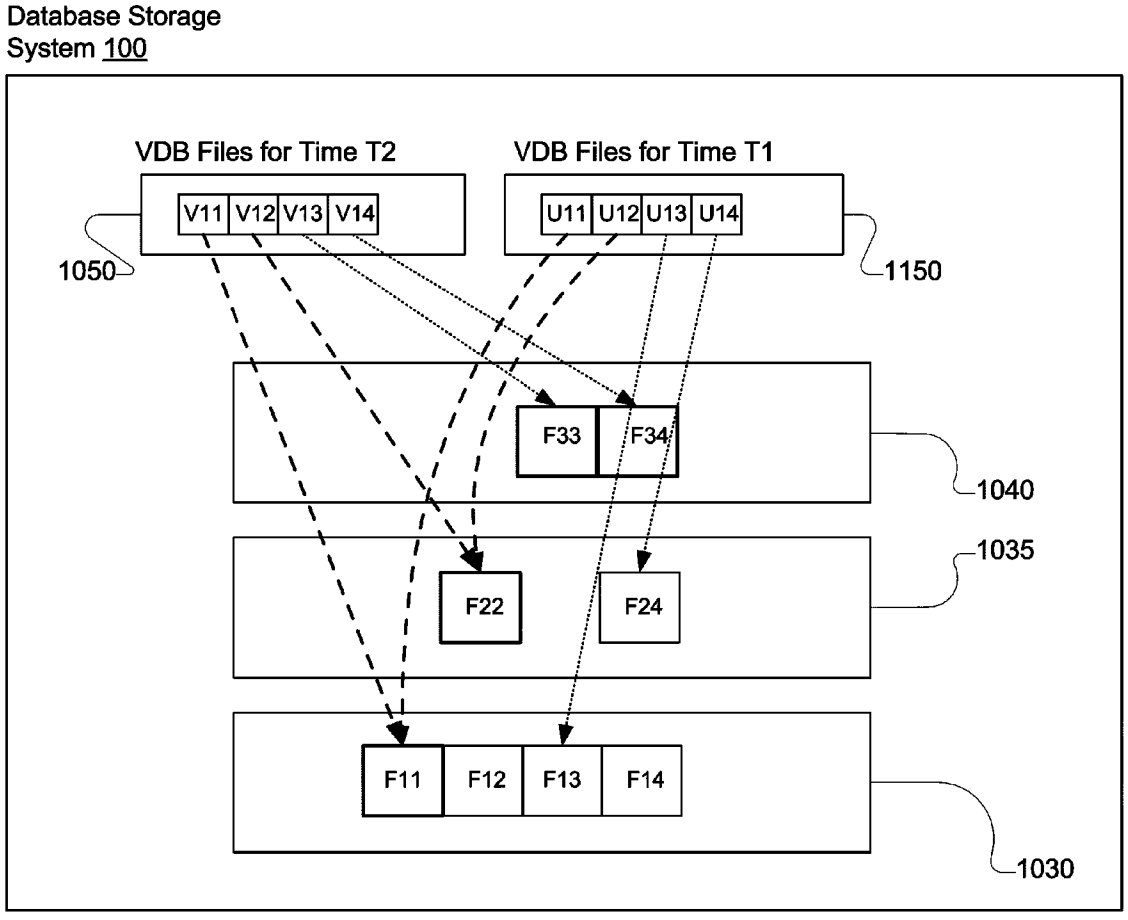
Database Storage
System 100
VDB Files for Time T2
VDB Files for Time T1
V11
V12
V13
V14
U11
U12
U13
U14
1050
1150
F33
F34
1040
1035
F22
F24
F11
F12
F13
F14
1030

FIG. 12

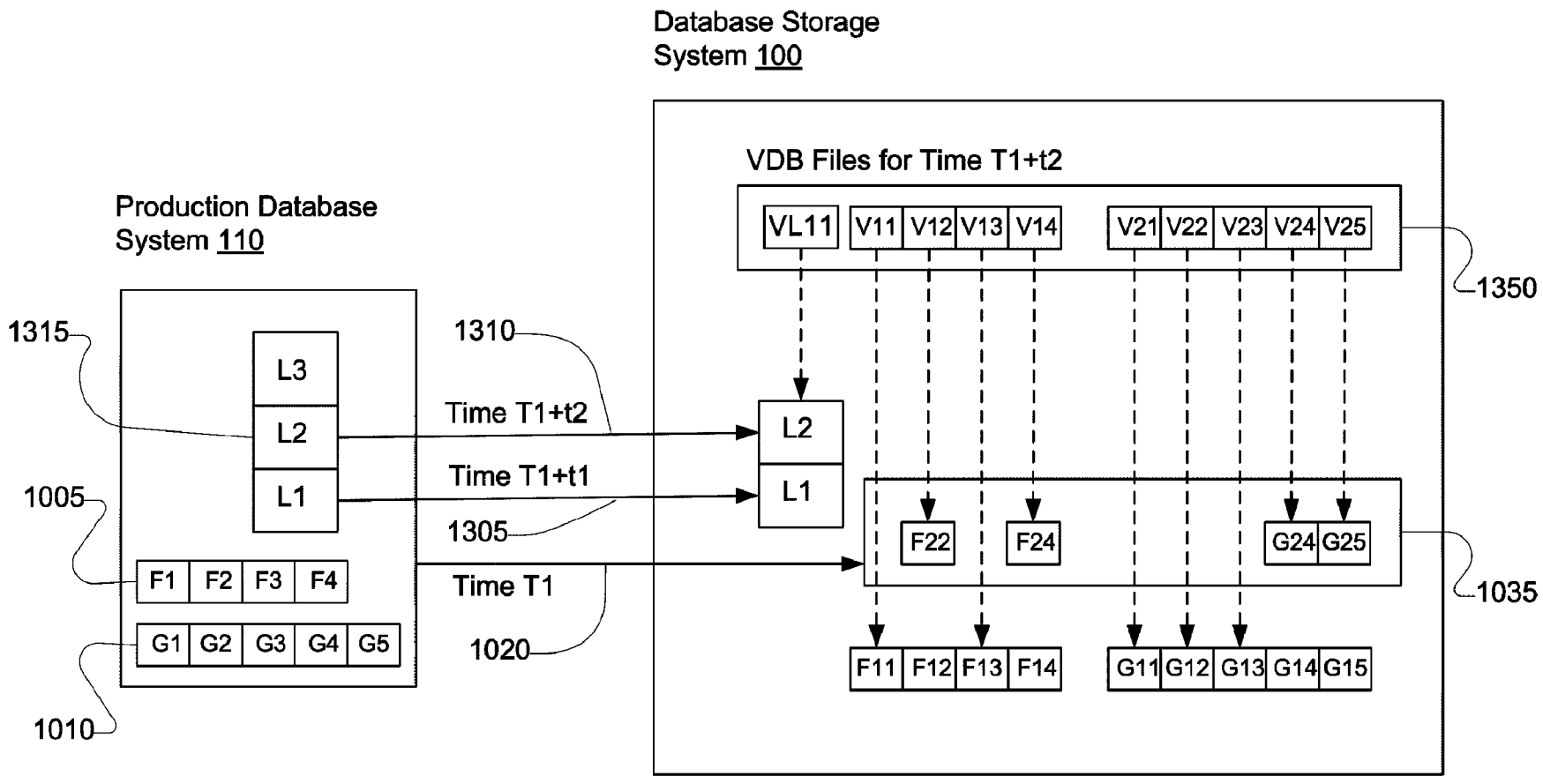
Database Storage System 100
VDB Files for Time T1+t2
VL11
V11
V12
V13
V14
V21
V22
V23
V24
V25
1350
Production Database System 110
1315
L3
L2
L1
1310
Time T1+t2
Time T1+t1
1005
1305
F1
F2
F3
F4
Time T1
G1
G2
G3
G4
G5
1020
1010
L2
L1
F22
F24
G24
G25
1035
F11
F12
F13
F14
G11
G12
G13
G14
G15

FIG. 13

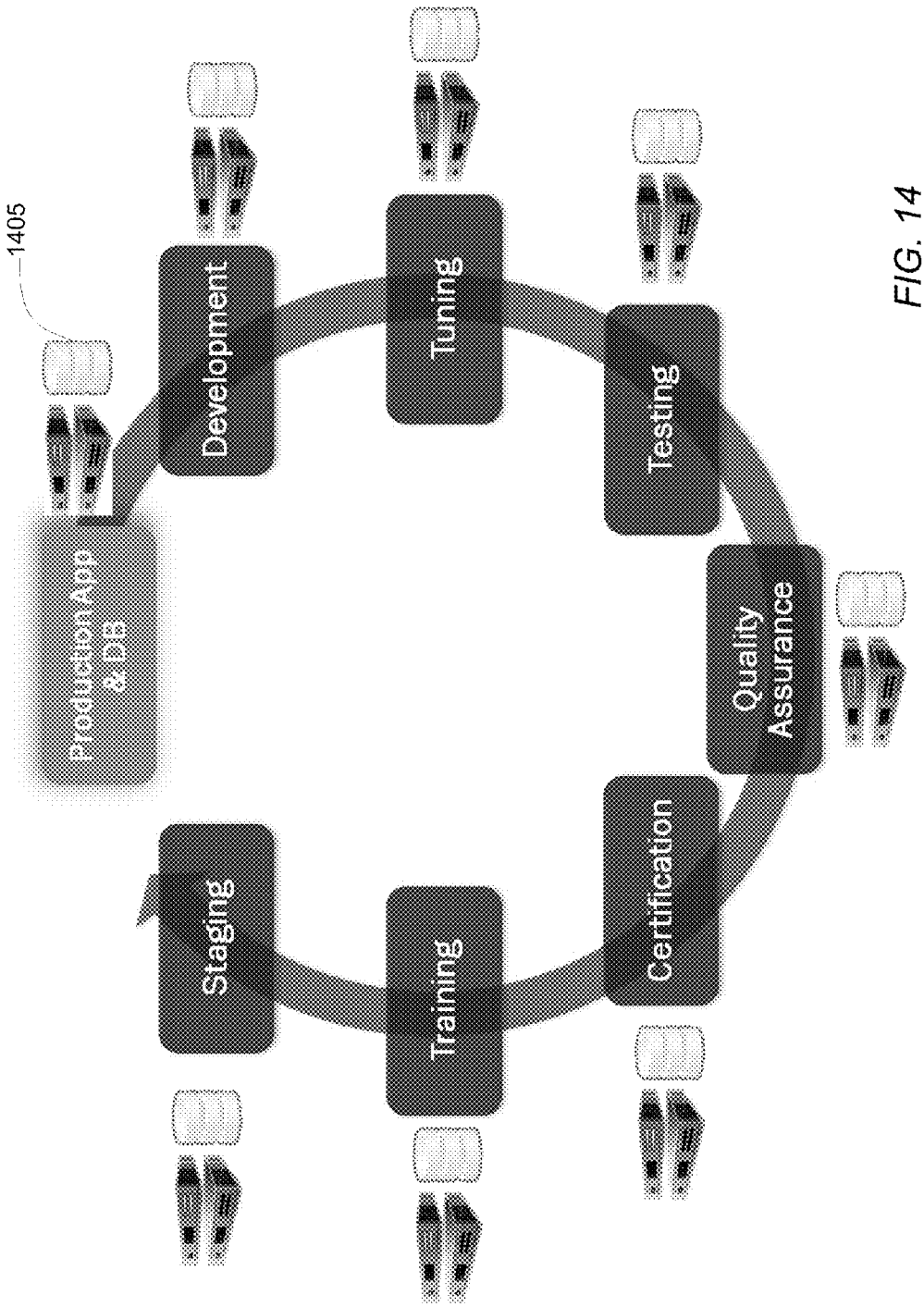
1405
Production App & DB
Development
Tuning
Testing
Quality Assurance
Certification
Training
Staging

FIG. 14

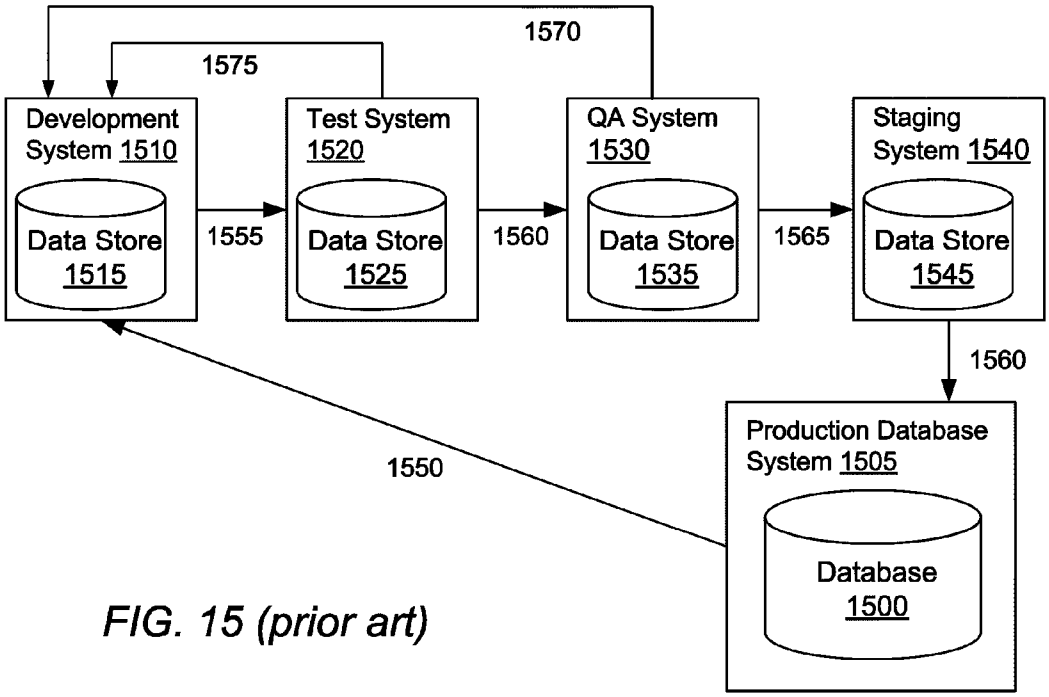

FIG. 15 (prior art)

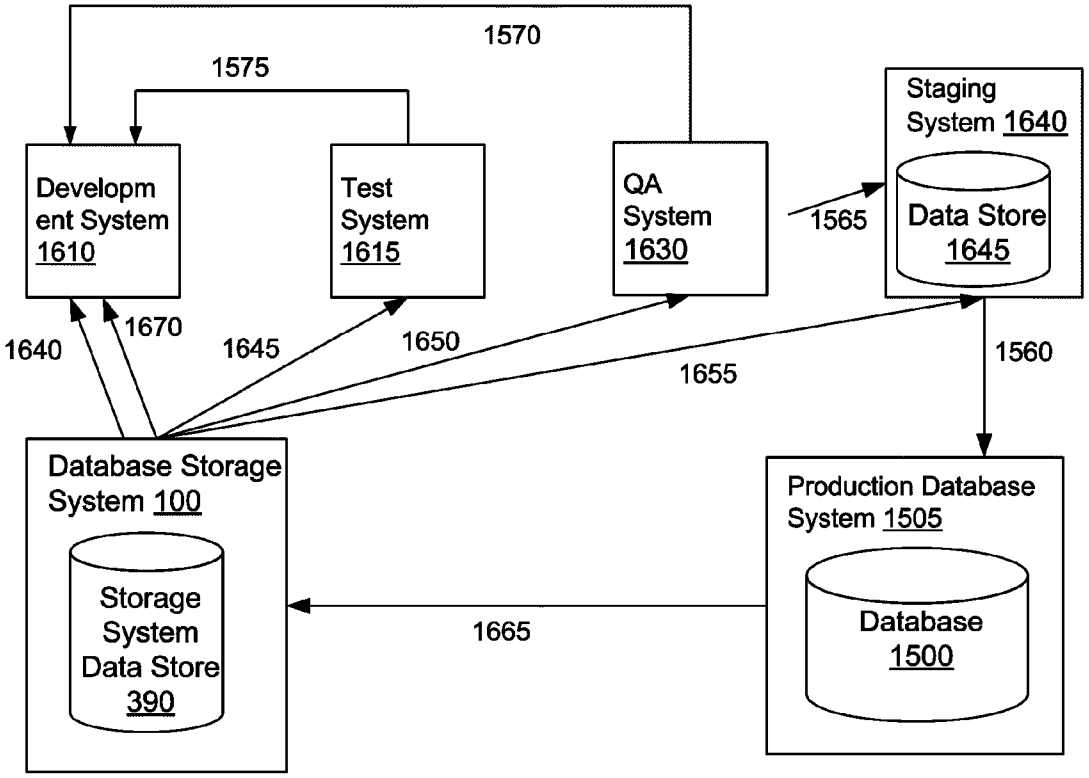
1570
1575
Staging System 1640
Data Store 1645
Developm ent System 1610
Test System 1615
QA System 1630
1565
1640
1670
1645
1650
1655
1560
Database Storage System 100
Storage System Data Store 390
Production Database System 1505
Database 1500
1665

FIG. 16

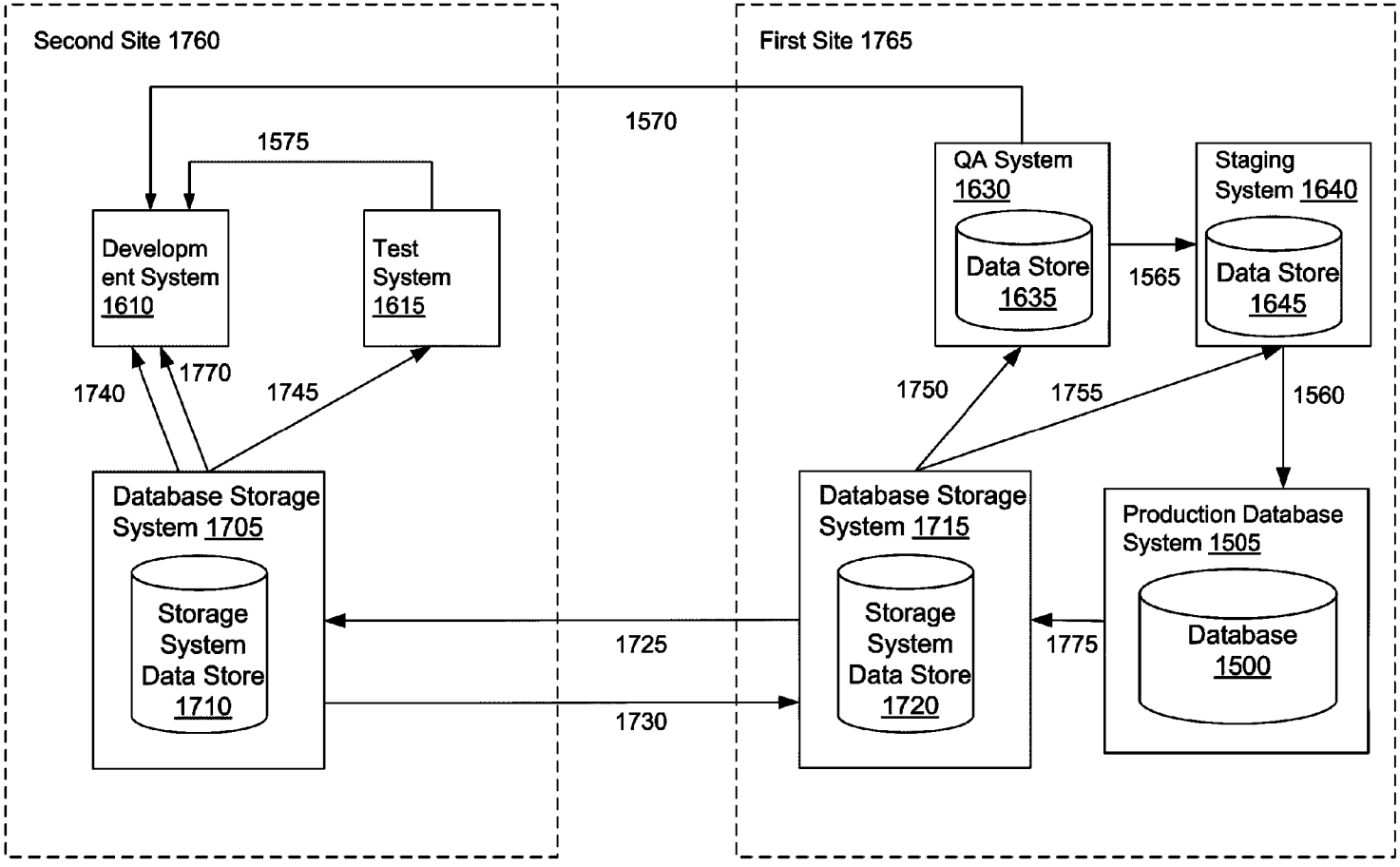
Second Site 1760
First Site 1765
1570
1575
Developm ent System 1610
Test System 1615
QA System 1630
Data Store 1635
Staging System 1640
Data Store 1645
1565
1740
1770
1745
1750
1755
1560
Database Storage System 1705
Storage System Data Store 1710
Database Storage System 1715
Storage System Data Store 1720
Production Database System 1505
Database 1500
1725
1730
1775

FIG. 17

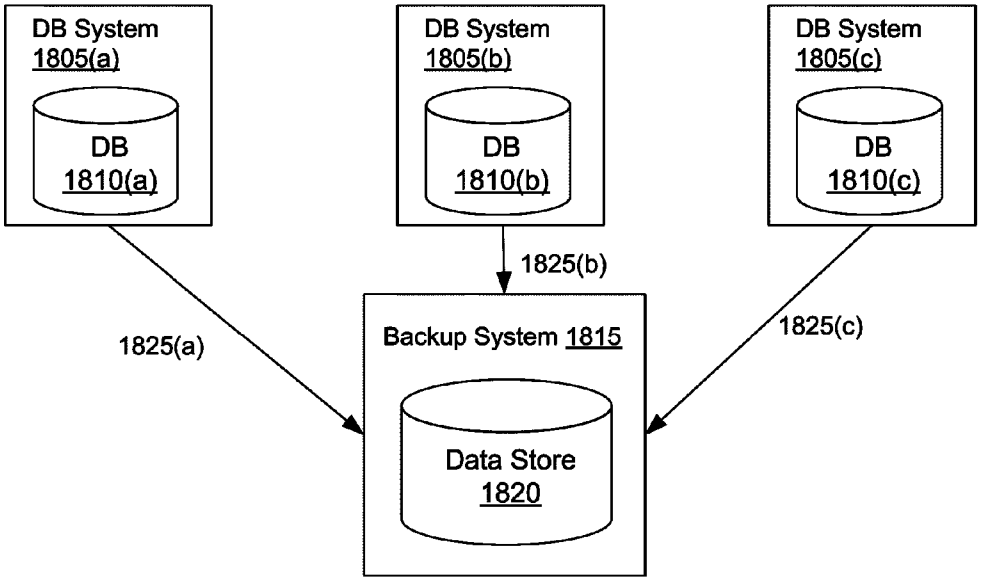

FIG. 18(a) (prior art)

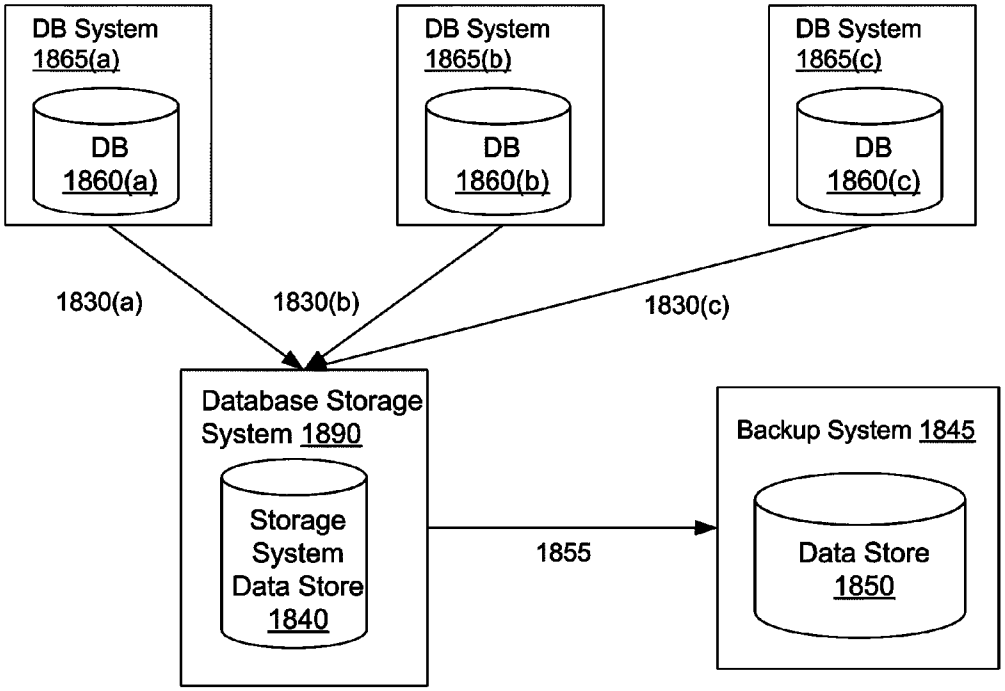

FIG. 18(b)

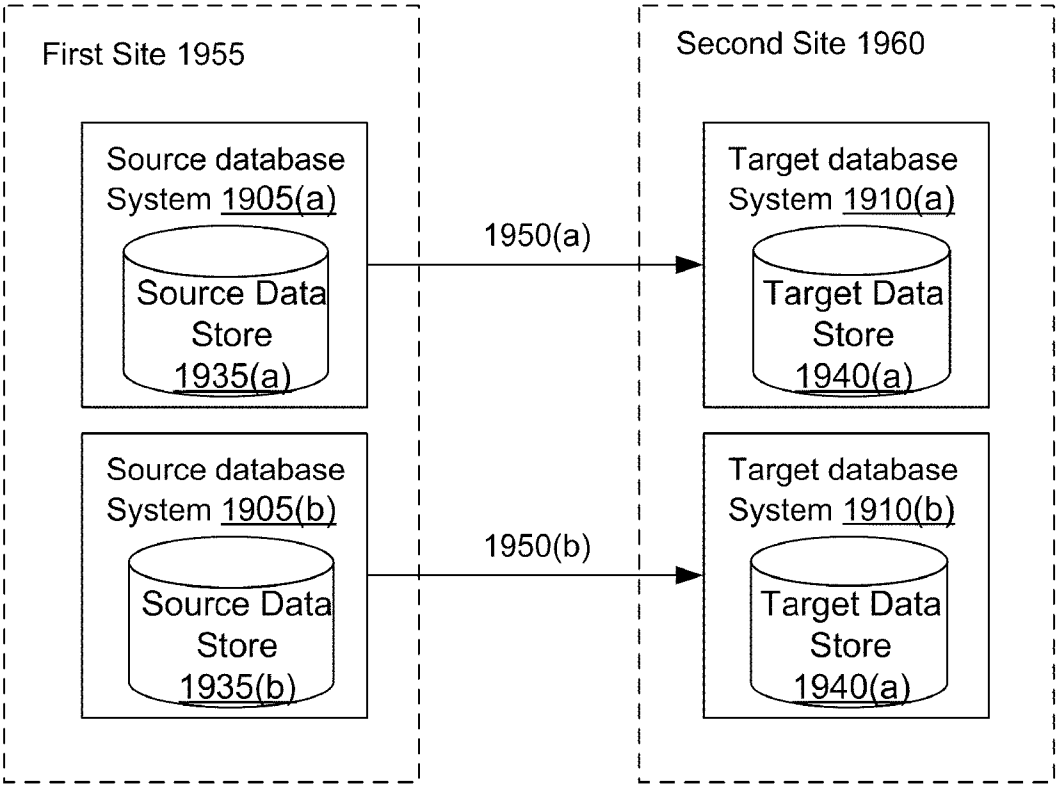

FIG. 19 (prior art)

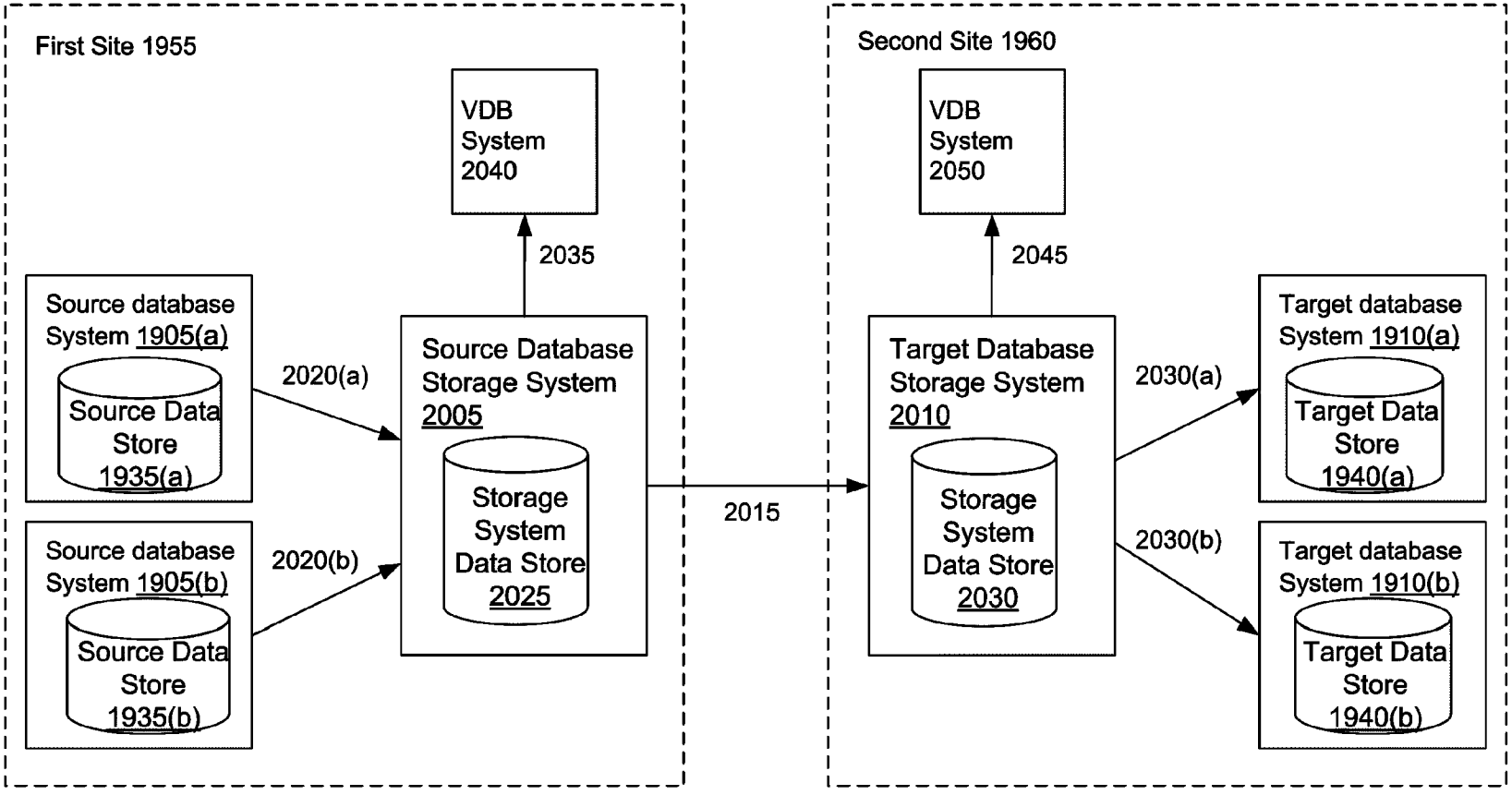
First Site 1955
VDB System 2040
2035
Source database System 1905(a)
Source Data Store 1935(a)
2020(a)
Source Database Storage System 2005
Storage System Data Store 2025
Source database System 1905(b)
Source Data Store 1935(b)
2020(b)
2015
Second Site 1960
VDB System 2050
2045
Target Database Storage System 2010
Storage System Data Store 2030
2030(a)
2030(b)
Target database System 1910(a)
Target Data Store 1940(a)
Target database System 1910(b)
Target Data Store 1940(b)

FIG. 20

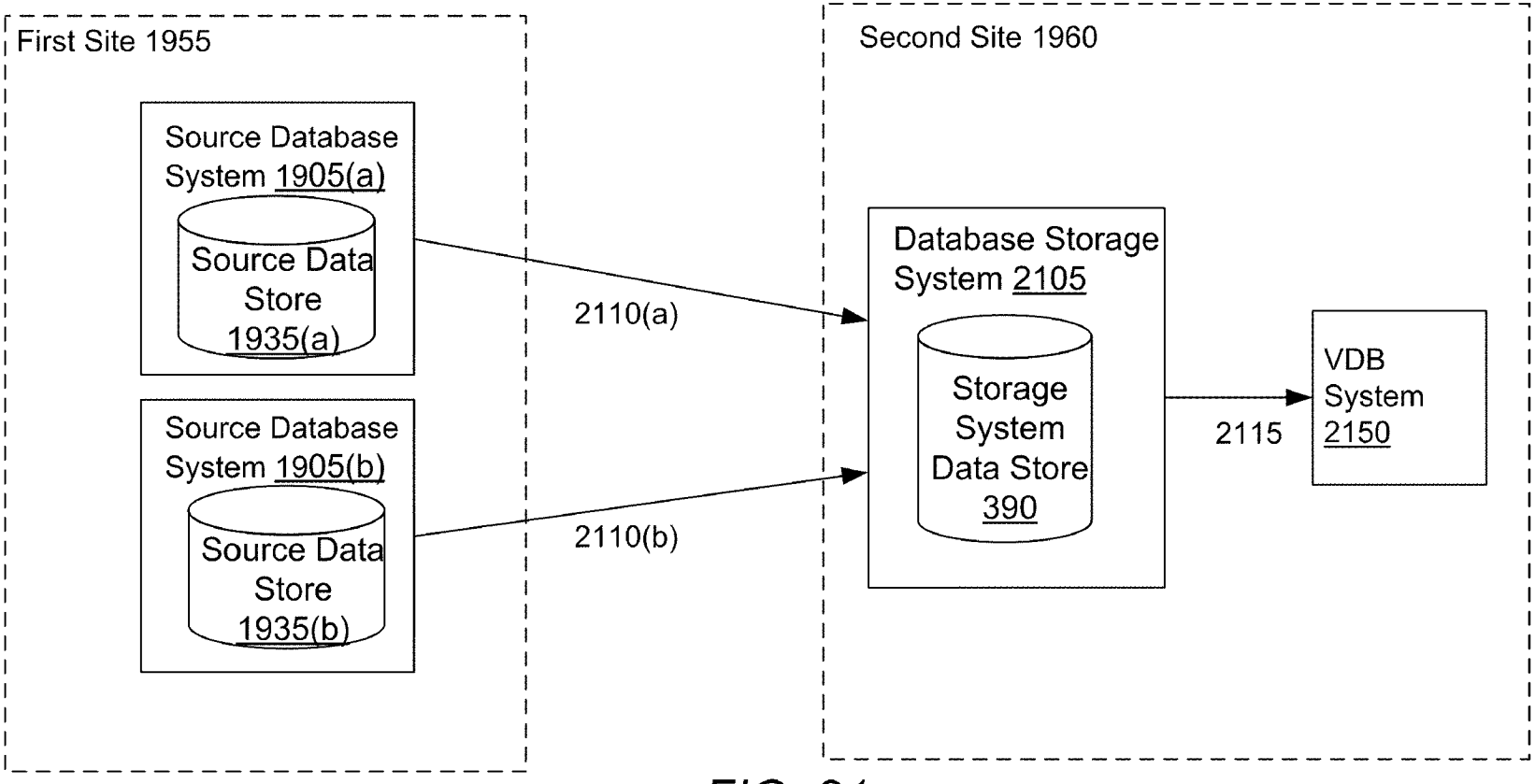
First Site 1955
Source Database System 1905(a)
Source Data Store 1935(a)
Source Database System 1905(b)
Source Data Store 1935(b)
2110(a)
2110(b)
Second Site 1960
Database Storage System 2105
Storage System Data Store 390
2115
VDB System 2150

FIG. 21

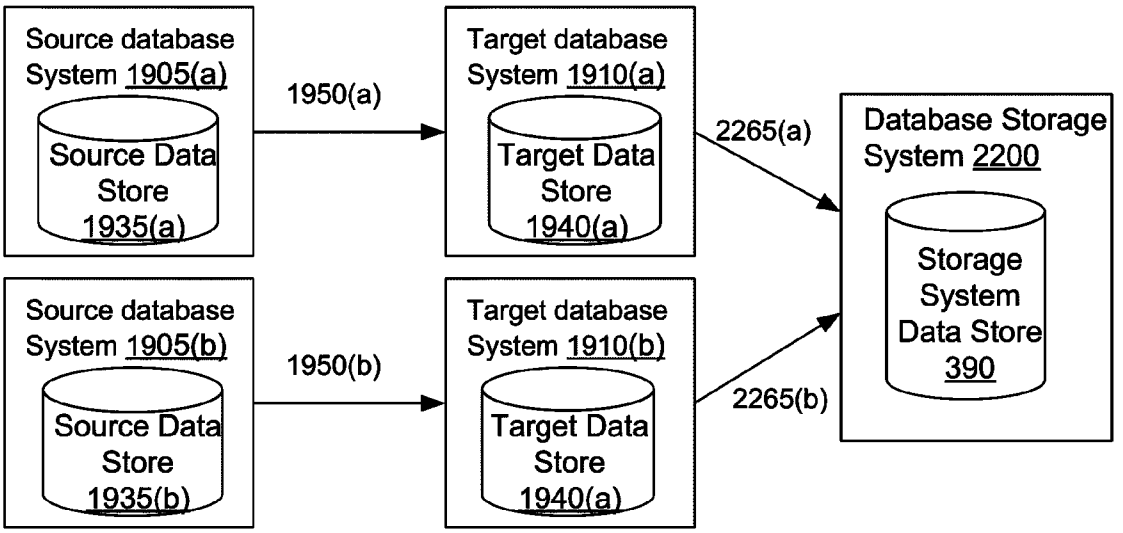
Source database System 1905(a)
Source Data Store 1935(a)
1950(a)
Target database System 1910(a)
Target Data Store 1940(a)
2265(a)
Database Storage System 2200
Storage System Data Store 390
Source database System 1905(b)
Source Data Store 1935(b)
1950(b)
Target database System 1910(b)
Target Data Store 1940(a)
2265(b)

FIG. 22

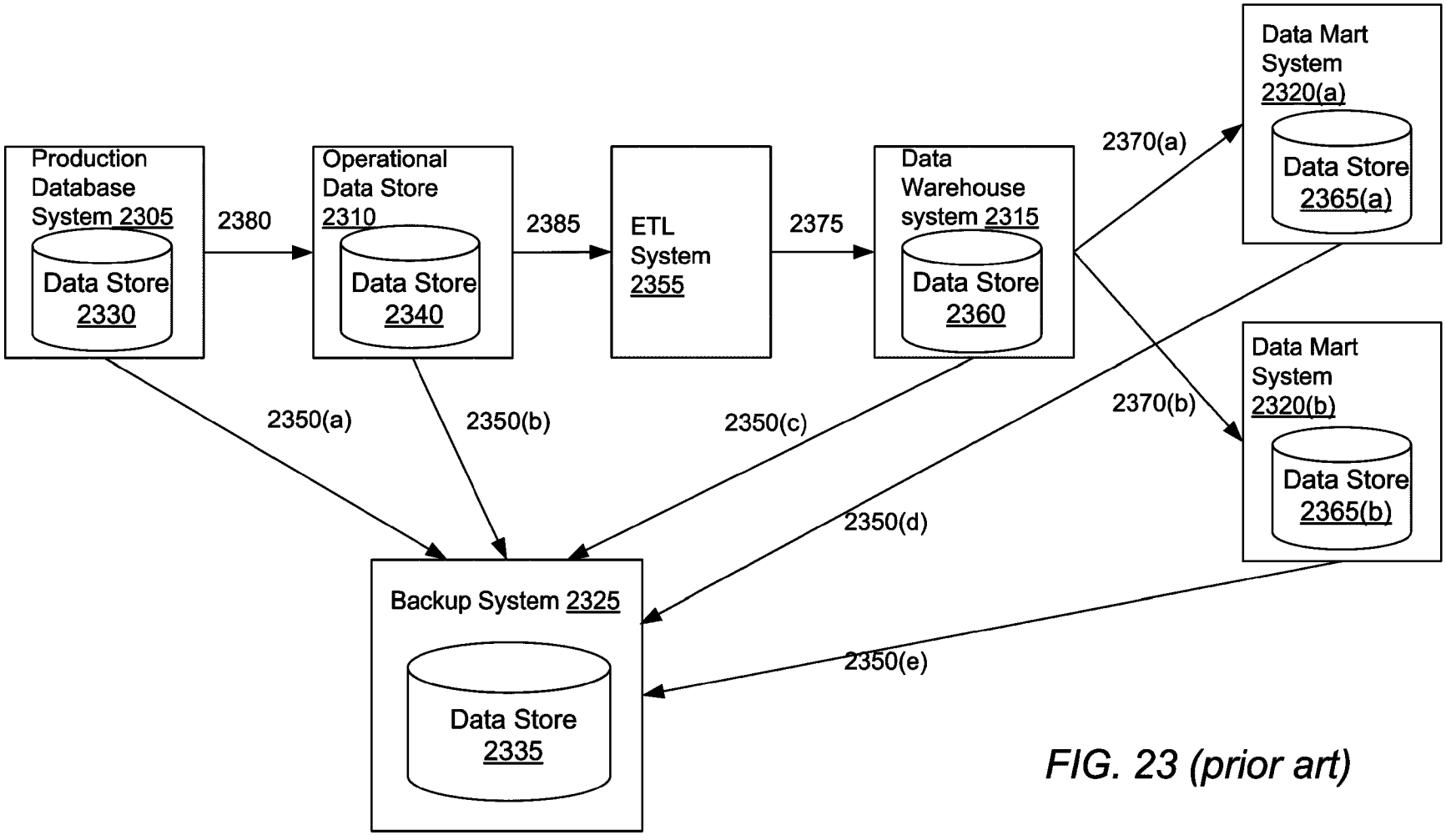

FIG. 23 (prior art)

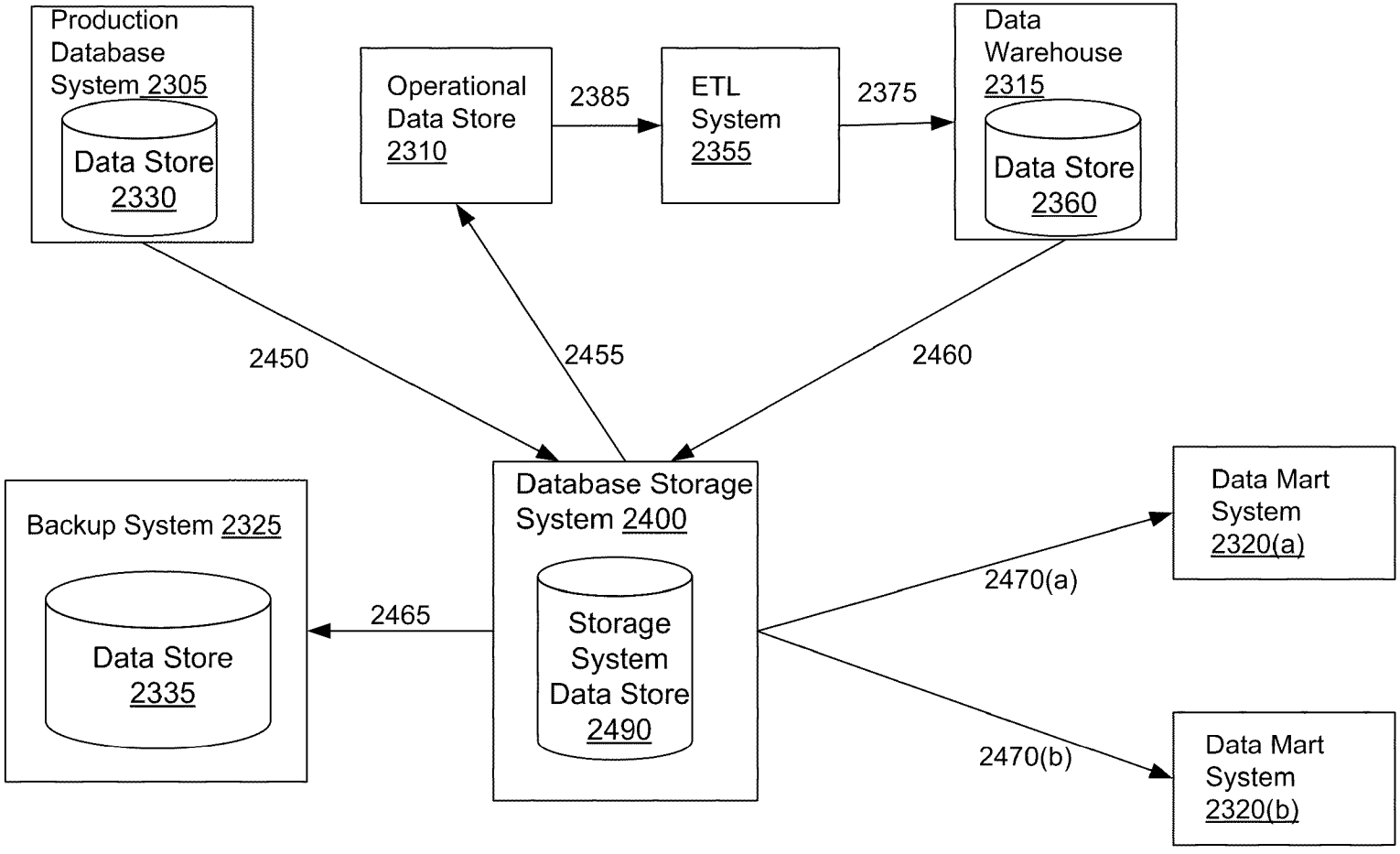
Production Database System 2305
Data Store 2330
Operational Data Store 2310
2385
ETL System 2355
2375
Data Warehouse 2315
Data Store 2360
2450
2455
2460
Backup System 2325
Data Store 2335
2465
Database Storage System 2400
Storage System Data Store 2490
2470(a)
2470(b)
Data Mart System 2320(a)
Data Mart System 2320(b)

FIG. 24

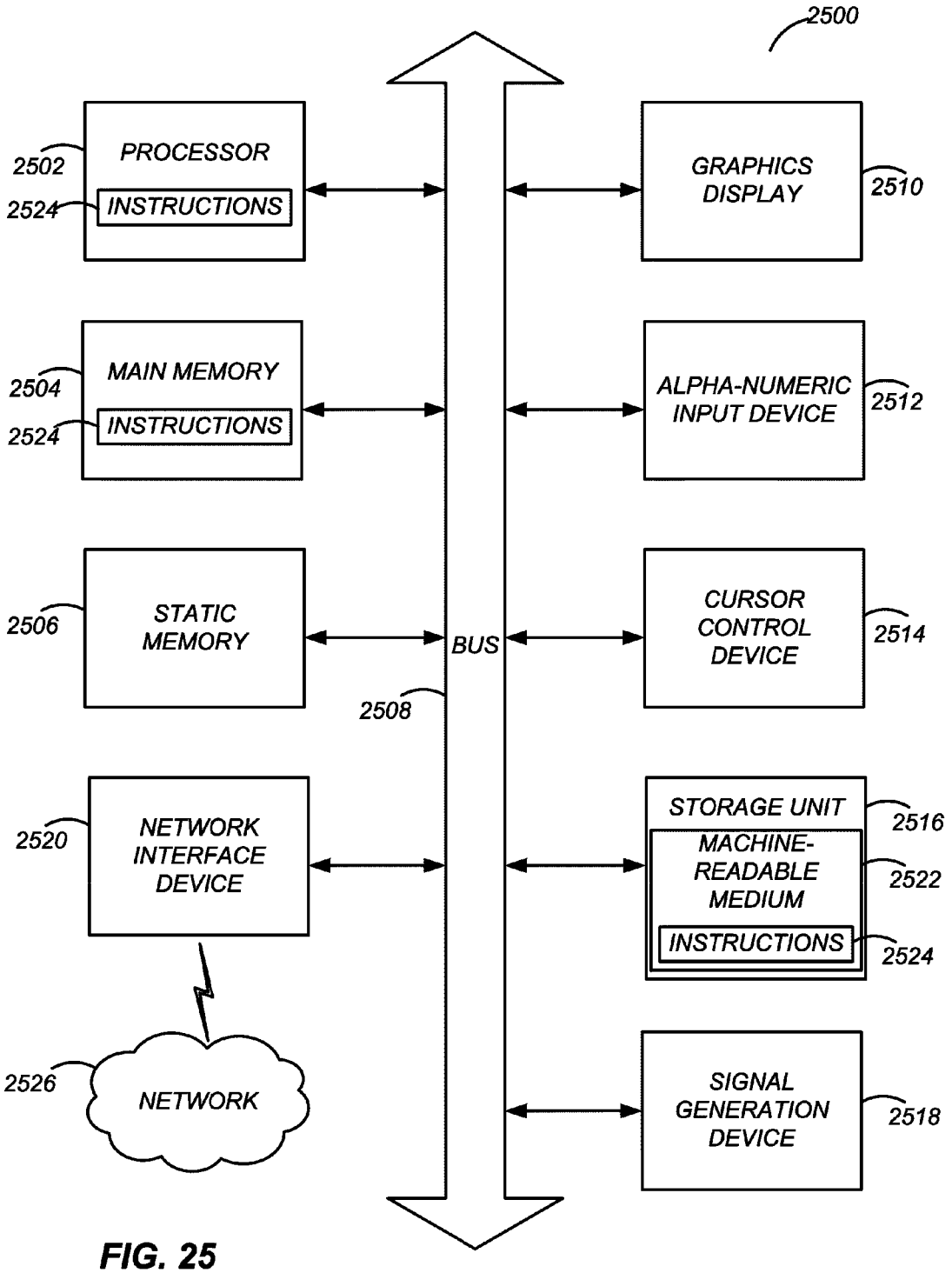
2500
PROCESSOR
2502
INSTRUCTIONS
2524
MAIN MEMORY
2504
INSTRUCTIONS
2524
STATIC MEMORY
2506
NETWORK INTERFACE DEVICE
2520
NETWORK
2526
BUS
2508
GRAPHICS DISPLAY
2510
ALPHA-NUMERIC INPUT DEVICE
2512
CURSOR CONTROL DEVICE
2514
STORAGE UNIT
2516
MACHINE-READABLE MEDIUM
2522
INSTRUCTIONS
2524
SIGNAL GENERATION DEVICE
2518

FIG. 25

VIRTUAL DATABASE SYSTEM

BACKGROUND

This invention relates generally to databases, and in particular to storage efficient systems for managing databases and lifecycle workflows based on databases.

Databases store the data that is critical to an organization and thus form an important part of an organization's information technology infrastructure. As the information available in an organization grows, so does the complexity of the infrastructure required to manage the databases that store the information. The increased complexity of the infrastructure increases the resources required to manage the databases and the applications that depend on the databases. These increased costs may include the costs associated with hardware for managing the databases as well as the costs associated with additional personnel needed to maintain the hardware. The increased complexity of the infrastructure also affects the maintenance operations associated with the databases, for example, causing backup and recovery operations to take significantly longer.

In a typical organization's infrastructure environment, production database servers run applications that manage the day-to-day transactions of the organization. Changes to production databases or to applications that depend on the production databases are tested on copies of the databases to protect the production environment. Copies of the production databases may be required for several stages in the lifecycles of workflows associated with the production database and applications that depend on the production databases. For example, the stages in the lifecycle of a change incorporated in a production database may include a development stage, a tuning stage, a testing stage, a quality assurance stage, a certification stage, a training stage, and a staging stage. Making copies of the production databases for each stage requires redundant and expensive hardware infrastructure as well as the time overhead required to copy the data, which may take days or weeks. Additional hardware also requires additional costs associated with physically storing the hardware, such as floor space requirements and costs related to power and cooling. Furthermore, redundant hardware typically causes inefficient use of available resources.

Lifecycle workflows can be complex and often involve coordination across multiple teams. Hence, making a database available for a specific purpose, such as for supporting a particular stage in the lifecycle, may require further processing associated with the databases. For example, databases often contain critical confidential information, causing security and integrity to be important considerations in an environment managing databases. As a result, access permissions required for different teams working on different stages are often different. For example, data that can be accessed by personnel managing the production database server is often different from data that can be accessed by a person working in the testing stage of the lifecycle. This causes further complications related to administration of permissions across various stages of the lifecycle of any workflow related to the databases.

SUMMARY

To address the needs unmet by existing database technologies, embodiments of the invention enable virtual databases that efficiently use storage and other computing resources. Methods of creating a virtual database (VDB) read different point-in-time copies of a source database. In these embodiments a "source database" includes physical copies of the database in an enterprise that includes production database, standby database, and any other life cycle databases. In the detailed description of invention that follows "production database" and "source database" are used interchangeably to mean the same. Multiple database blocks are read from the source database and stored on a storage system. A database block is a unit of data used by a database and comprises a specific number of bytes stored in the storage. A database block can also be referred to as a page. A portion of the database block stores metadata associated with the database block. Examples of information that may be stored in the metadata of a database block include information related to the data stored in the database block, information related to objects of database that the database block is part of, or information indicating when the data in the database block was updated. The information indicating when a database block was updated may be available as a relative ordering of the database blocks based on their time of update. The database blocks retrieved from the source database and stored on the storage system correspond to different point-in-time copies of the source database and at least some of the database blocks are associated with multiple point-in-time copies of the source database. A set of files are created for a virtual database. Each file in the set of files created for a VDB is linked to the database blocks on the storage system associated with a point-in-time copy of the source database. The set of files associated with the VDB are mounted on a database server allowing the database server to read from and write to the set of files. In an embodiment, a virtual database may be created based on point-in-time copies of another virtual database.

In an embodiment, multiple VDBs can be created based on the database blocks associated with the same point-in-time copies of the source database. Alternatively, two VDBs created may be associated with different point-in-time copy of the source databases. The database blocks stored on the storage system may be shared between sets of files associated with different VDBs. The sharing of database blocks stored on the storage system may occur between VDBs associated with the same point-in-time copy of the source database or between VDBs associated with different point-in-time copies of the source database. In an embodiment, pre-script operations may be performed before linking, loading, or provisioning operations. The pre-script operation allows user specified operations to be executed, for example, processing information that may not be stored in the source database. Similarly, post-script operations may be performed after linking, loading, or provisioning operations. A post-script operation may be associated with a pre-script operation and perform further processing on the information processed in the pre-script operation.

In an embodiment, a request can be received from the database server to read the data stored in the VDB. The data requested is accessed from the database blocks and sent to the database server in response to the read request. In another embodiment, a request can be received from the database server to write data to the VDB. A database block associated with a file in the set of files associated with the VDB is identified for writing the data sent in the write request. If the database block identified is also associated with the second VDB, a copy of the database block is made. The copied database block is linked to the file and the data in the write request is written to the copied database block. The original database block that was copied remains associated with the second VDB allowing the second VDB to view data unchanged by the write operation.

The features and advantages described in this summary and the following detailed description are not all-inclusive. Many additional features and advantages will be apparent to one of ordinary skill in the art in view of the drawings, specification, and claims.

BRIEF DESCRIPTION OF THE DRAWINGS

FIG. **1** is diagram illustrating how information is copied from a production database to a database storage system and provisioned as virtual databases using a file sharing system, in accordance with an embodiment of the invention.

FIG. **2***a* is a diagram showing how a virtual database system may run a different version of the database server compared to the version of the database server on the production database system that is the source of the database being virtualized, in accordance with an embodiment of the invention.

FIG. **2***b* is a diagram showing how a virtual database system may run using a database server executing on an operating system that is different compared to the operating system executing the database server of the production database system that is the source of the database being virtualized, in accordance with an embodiment of the invention.

FIG. **3** is a schematic diagram of the architecture of a system that makes storage efficient copies of information from a production database and provisions virtual databases, in accordance with an embodiment of the invention.

FIG. **4** illustrates the interaction between components of a database storage system and the components of a production database system for making a storage efficient copy of the production database on the database storage system, in accordance with an embodiment of the invention.

FIG. **5** is a flowchart of a process for processing a stream of data received by the database storage system from a production database system to save the data in a storage efficient way, in accordance with an embodiment of the invention.

FIG. **6** is a flowchart of a process for copying the transaction log files from a production database system to the database storage system to enable provisioning of virtual databases at a given point in time, in accordance with an embodiment of the invention.

FIG. **7** is a diagram of the files used for storing the transaction logs in the database storage system compared with the production database system, in accordance with an embodiment of the invention.

FIG. **8** is a diagram illustrating how data for a database is maintained at different points in time in the database storage system, in accordance with an embodiment of the invention.

FIG. **9** is a flowchart of a process for creating a virtual database at a given point in time, in accordance with an embodiment of the invention.

FIG. **10** illustrates the creation of a read-write copy of a database at a given point in time to provision a virtual database, in accordance with an embodiment of the invention.

FIG. **11** illustrates the creation of a read-write copy of a database at a different point in time compared to FIG. **10** to provision a virtual database, in accordance with an embodiment of the invention.

FIG. **12** illustrates how database blocks stored on the storage system data store may be shared by file structures created for different VDBs, in accordance with an embodiment of the invention.

FIG. **13** illustrates the creation of a read-write copy of a database for provisioning a virtual database based on transaction logs copied from the production database system, in accordance with an embodiment of the invention.

FIG. **14** illustrates the life cycles of a database in a workflow for making changes to the database or to applications that depend on the database, in one example environment.

FIG. **15** illustrates a system environment for implementing a workflow for testing and development of program code related to databases and database applications using conventional methods.

FIG. **16** illustrates a system environment for implementing a workflow for testing and development of program code related to databases and database applications using VDBs, in accordance with an embodiment of the invention.

FIG. **17** illustrates a system environment for implementing a workflow for a multi-site testing and development of program code related to databases and database applications using VDBs, in accordance with an embodiment of the invention.

FIG. **18***a* illustrates a system environment for implementing a workflow for backup and recovery of databases using conventional methods.

FIG. **18***b* illustrates a system environment for implementing a workflow for backup and recovery of databases using VDBs, in accordance with an embodiment of the invention.

FIG. **19** illustrates a system environment for implementing a workflow for a generic scenario that requires copying of information in a database from one machine to another machine using conventional methods.

FIG. **20** illustrates a system environment for implementing a workflow based on VDBs for a generic scenario that requires copying of information in a database from one machine to another machine, in accordance with an embodiment of the invention.

FIG. **21** illustrates a system environment for implementing a workflow based on VDBs for a scenario that requires copying of information in a database from one machine to another machine, in accordance with another embodiment of the invention.

FIG. **22** illustrates a system environment for implementing a workflow based on VDBs for a generic scenario that requires copying of information in a database from a machine different from the production database system to another machine, in accordance with an embodiment of the invention.

FIG. **23** illustrates a system environment for implementing a workflow for a scenario for creating data warehouse and data marts from a database using conventional methods.

FIG. **24** illustrates a system environment based on VDBs for implementing a workflow for a scenario for creating data warehouse and data marts from a database, in accordance with an embodiment of the invention.

FIG. **25** illustrates an embodiment of a computing machine that can read instructions from a machine-readable medium and execute the instructions in a processor or controller.

The figures depict various embodiments of the present invention for purposes of illustration only. One skilled in the art will readily recognize from the following discussion that alternative embodiments of the structures and methods illustrated herein may be employed without departing from the principles of the invention described herein.

DETAILED DESCRIPTION

Virtual Database Systems

In certain embodiments of the invention, one or more virtual databases are created based on the state of a production database or a virtual database at a particular point in time, and the virtual databases can then be individually accessed and modified as desired. A database comprises data stored in a

computer for use by computer implemented applications. A database server is a computer program that can interact with the database and provides database services, for example, access to the data stored in the database. Database servers include commercially available programs, for example, database servers included with database management systems provided by ORACLE, SYBASE, MICROSOFT SQL SERVER, IBM's DB2, MYSQL, and the like. A database may be implemented using a database model, for example, a relational mode, object model, hierarchical mode or network model. The term "production database" is used in particular examples to illustrate a useful application of the technology; however, it can be appreciated that the techniques disclosed can be used for any database, regardless of whether the database is used as a production database. Furthermore, embodiments can create a virtual database using storage level snapshots of production databases or clones of production databases instead of a live production database. The virtual databases are "virtual" in the sense that the physical implementation of the database files is decoupled from the logical use of the database files by a database server.

In one embodiment, information from the production database is copied to a storage system at various times, such as periodically. This enables reconstruction of the database files associated with the production database for these different points in time. The information may be managed in the storage system in an efficient manner so that copies of information are made only if necessary. For example, if a portion of the database is unchanged from a version that was previously copied, that unchanged portion need not be copied. A virtual database created for a point in time is stored as a set of files that contain the information of the database as available at that point in time. Each file includes a set of database blocks and the data structures for referring to the database blocks. In some embodiments, the database blocks may be compressed in order to store them efficiently. In some embodiments, the database blocks may be stored in the storage system data store **390** in an encrypted form to increase security of stored data. A virtual database may be created on a database server by creating the database files for the production database corresponding to the state of the production database at a previous point in time, as required for the database server. The files corresponding to the virtual database are made available to the database server using a file sharing mechanism, which links the virtual database to the appropriate database blocks stored on the storage system. The process of making the virtual database available to a database server is called "provisioning" the virtual database. In some embodiments, provisioning the virtual database includes managing the process of creating a running database server based on virtual database. Multiple VDBs can be provisioned based on the state of the production database at the same point in time. On the other hand, different VDBs can be based on different point in time state of the same production database or different production databases. In some embodiments, provisioned databases are monitored for health and user actions. The database storage system **100** is notified of these events. The database storage system **100** handles these events based on either built-in or user specified rules. For example, if a user action affects availability of a virtual database, a warning message can be displayed on monitoring console or transmitted to a user via email. The database server on which a virtual database has been provisioned can then read from and write to the files stored on the storage system. A database block may be shared between different files, each file associated with a different VDB. In particular, a database block is shared if the corresponding virtual database systems **130** are only reading the information in the database block and not writing to the database block. In one embodiment, the virtual database manager **375** makes copies of the database blocks only if necessary. For example, a particular database block may be shared by multiple VDBs that read from the same database block. But if one of virtual database systems **130** attempts to write to the database block, a separate copy of the database block is made because the writing operation causes that database block to be different for the VDB corresponding to that virtual database systems **130** than it is for the other VDBs.

FIG. **1** illustrates one embodiment for how information may be copied from a production database to a database storage system and provisioned as virtual databases using a file sharing system. The production database systems **110** manage data for an organization. In some embodiments information may be copied from storage level snapshots of production databases or clones of production databases instead of a live production database. The database storage system **100** retrieves data associated with databases from one or more production database systems **110** and stores the data in an efficient manner, further described below. A database administrator user interface **140** allows a database administrator to perform various actions supported by the database storage system **100**.

In response to a request from the administrator system **140**, or based on a predefined schedule, the database storage system **100** may send a request **150** for data to a production database system **110**. The production database system **110** responds by sending information stored in the production database as a stream of data **160**. The request **150** is sent periodically and the production database system **110** responds by sending information representing changes of data stored in the production database since the last response **160** sent by the production database system **110**. The database storage system **100** receives the data **160** sent by the production database system **110** and stores the data. The database storage system **100** may analyze the data **160** received to determine whether to store the information or skip the information if the information is not useful for reconstructing the database at previous time points. The database storage system **100** stores the information efficiently, for example, by keeping versions of database blocks that have changed and reusing database blocks that have not changed. In an embodiment, database storage system **100** employs a hierarchical caching system where high speed solid-state drive (SSD) or equivalent storage devices are configured for caching read operations and for persisting logs for writing operations to magnetic disks.

To create a virtual database, the database storage system **100** creates files that represent the information corresponding to the production database system **110** at a given point in time. The database storage system **100** exposes **170** the corresponding files to a virtual database system **130** using a file sharing system **120**. The virtual database system **130** runs a database server that can operate with the files exposed **170** by the database storage system **100**. Hence, a virtual copy of the production database is created for the virtual database system **130** for a given point in time in a storage efficient manner.

FIG. **2** shows that a virtual database system **130** may run a different version of the database server and/or a different operating system compared to the production database system **110** that is the source of the database being virtualized. The virtual database files stored in the database storage system **100** are appropriately modified so that the virtual database system **130** can operate with the files even though the database server **230** has a different version compared to the database server **205** and/or a different operating system **240**

compared to operating system **210**. As shown in FIG. **2**(*a*) the database server **230** running on the virtual database system **130** has version Vy which is different from the version Vx of the database server **205** running on the production database system **110**. Similarly, as shown in FIG. **2**(*b*) the operating system **240** running on the virtual database system **130** is OSy which is different the operating system OSx running on the production database system **110**. In one embodiment, server **230** and **205** may run dissimilar database software programs. This provides the ability to try different operating systems or database server versions for running the database. In the case of database and/or application upgrade, patching, or migration, this ability makes it easy to test the operation without any effect on production system. Operations can be then certified in an isolated environment prior to deployment into a production system. In some embodiments, the database storage system **100** may be executed on a virtual machine provided by platform virtualization software or server virtualization software that allows multiple operating systems to run on a host computer concurrently.

System Architecture

FIG. **3** shows a high level block diagram illustrating a system environment suitable for making storage efficient copies of information from a production database and provisioning one or more virtual databases using that information. The system environment comprises one or more production database systems **110**, a database storage system **100**, an administration system **140**, and one or more virtual database systems **130**. Systems shown in FIG. **3** can communicate with each other if necessary via a network.

A production database system **110** is typically used by an organization for maintaining its daily transactions. For example, an online bookstore may save all the ongoing transactions related to book purchases, book returns, or inventory control in a production system **110**. The production system **110** includes a database server **345**, a production DB data store **350**, a vendor interface module **335**, and a production system library **385**. In alternative configurations, different and/or additional modules can be included in a production database system **110**.

The production DB data store **350** stores data associated with a database that may represent for example, information representing daily transactions of an enterprise. The database server **345** is a computer program that provides database services and application programming interfaces (APIs) for managing data stored on the production DB data store **350**. The production system library **385** provides APIs useful for extracting information from the production database system **110**. The vendor interface module **335** represents APIs provided by a vendor for customizing functionality provided by the database server **345**, for example, APIs to retrieve database blocks that changed since a previous time point. An example of a vendor interface module is the program code of a database server provided by vendor ORACLE that implements RMAN APIs. Database servers provided by other vendors, for example, MICROSOFT's SQL SERVER or IBM's DB2 have similar APIs. In one embodiment, the vendor interface module **335** mounts the production DB data store **350** of the production database system **110** on the database storage system **100** using a file sharing system similar to the file sharing system **120**. Mounting the production DB data store **350** on the database storage system **100** allows transfer of information stored on the production database system **110** to the database storage system **100**.

The production system library **385** may be implemented in different ways depending on the requirements of the vendor interface module **335**. In an embodiment, the vendor interface module **335** loads the production system library **385** in order to call back functions implemented in the production system library **385**. For example, the production system library **385** may be a shared object file with a ".so" or a ".DLL" file extension that contains executable program code that can be called by a C/C++ executable program or by a JAVA program that uses the JAVA NATIVE INTERFACE for interaction with binary code generated by C/C++ programs. Alternatively, the production system library **385** may be implemented using the JAVA programming language and installed in the production database system **110** as a file with ".jar" extension. The java program requires a JAVA VIRTUAL MACHINE running on the production database system **110** for execution. In another embodiment, a part of the production system library **385** may be implemented as an executable ".so" shared object file and another part of the production system library **385** may be implemented as a JAVA program installed as a ".jar" file.

The vendor interface module **335** responds to requests from database storage system **100**, and in response to the requests, collects requested information from the production DB data store **350** and returns the collected information to the database storage system **100**. The vendor interface module **335** may send request to the database server **345** for retrieving information from the production DB data store **350**. The vendor interface module **335** loads the program code in the production system library **385** and invokes it to transmit the stream of data for to the database storage system **100** for further processing. In some embodiments the vendor interface module **335** may directly interact with the production DB data store **350** instead of sending a request to the database server **345** to retrieve the necessary database blocks. In other embodiments, the vendor interface module **335** may retrieve the necessary database blocks from storage level snapshots of production databases or clones of production databases instead of a live production database.

The database storage system **100** retrieves information available in the production database systems **110** and stores it. The information retrieved includes database blocks comprising data stored in the database, transaction log information, metadata information related to the database, information related to users of the database and the like. The information retrieved may also include configuration files associated with the databases. For example, databases may use vendor specific configuration files to specify various configuration parameters including initialization parameters associated with the databases. Copying the configuration files allows a VDB to be created with configuration parameters similar to the source production database. In some embodiments, the configuration parameters files may be modified by a database administrator using the user interface **395** to customize the VDB configuration for a specific usage scenario. For example, the production database may be accessed by a database server **345** using a particular cache size whereas the corresponding VDB may be accessed by a database server **360** using a different cache size.

The information retrieved may also include information associated with applications using the database, for example, an enterprise resource planning (ERP) application may be using the database and may have data specific to the ERP application. Retrieving the ERP application data allows a similar ERP application to be executed with a VDB created based on the production database system. This is beneficial for usage scenarios where a VDB is created for an environment similar to the production environment, for example, for testing and development. A database administrator can use the user interface **395** to specify logic for copying the infor-

mation that is specific to a production environment as well as logic for appropriately installing the information with a VDB for use by a virtual database system **130**.

In some embodiments, information regarding users of the production database, for example, the users with administrative privileges may be obtained by using specific APIs or by running specific scripts on the production database. The information about the users can be used to facilitate life cycle management of VDBs in the system. In an embodiment, a database administrator is allowed to use the user interface **395** in order to specify information regarding user accounts to be created and their access permissions. For example, if the VDB is created for testing purposes, test users may be created on the VDB for test organization whereas if the VDB is created as a standby for the production database, only users with production support roles should have access. In some embodiments, access permission may specify if a user can provision a privileged VDB. One example of privileged VDB is a VDB with full access to non-public information (information that may not be accessible to non-privileged users), for example, social security numbers or credit card information. The corresponding un-privileged VDB is a VDB with non-public information masked or scrambled. Another example of privileged VDB is a VDB with sensitive data accessible transparently. The corresponding un-privileged VDB is a VDB with sensitive information encrypted.

In some embodiments, access privileges are simplified to three levels: administrator, owner, and auditor. Administrator has full control of all managed objects including databases and hosts. The control available to an administrator included policy management. Owner has access to use of resources, for example, an owner can provision a VDB. Auditor can view logs but may not have rights to consume system resources.

The data stored in the storage system data store **390** can be exposed to a virtual database system **130** allowing the virtual database system **130** to treat the data as a copy of the production database stored in the production database system **110**. The database storage system **100** includes a point-in-time copy manager **310**, a transaction log manager **320**, a interface manager **330**, a system configuration manager **315**, a storage allocation manager **365**, a file sharing manager **370**, a virtual database manager **375**, and a storage system data store **390**. In alternative configurations, different and/or additional modules can be included in the database storage system **100**.

The point-in-time copy manager **310** interacts with the production database system **110** by sending a request to the vendor interface module **335** to retrieve information representing a point-in-time copy (also referred to as a "PIT copy") of a database stored in the production DB data store **350**. The point-in-time copy manager **310** stores the data obtained from the production database system **110** in the storage system data store **390**. The data retrieved by the point-in-time copy manager **310** corresponds to database blocks (or pages) of the database being copied from the production DB data store **350**. After a first PIT copy request to retrieve information production DB data store **350**, a subsequent PIT copy request may need to retrieve only the data that changed in the database since the previous request. The data collected in the first request can be combined with the data collected in a second request to reconstruct a copy of the database corresponding to a point in time at which the data was retrieved from the production DB data store **350** for the second request.

The transaction log manager **320** sends request to the production database system **110** for retrieving portions of the transaction logs stored in the production database system **110**. In some embodiments, the request from the transaction log manager **320** is sent to the vendor interface module **335**. The data obtained by the transaction log manager **320** from the vendor interface module **335** is stored in the storage system data store **390**. In one embodiment, a request for transaction logs retrieves only the changes in the transaction logs in the production database system **110** since a previous request for the transaction logs was processed. The database blocks retrieved by a point in time copy manager **310** combined with the transaction logs retrieved by the transaction log manager **320** can be used to reconstruct a copy of a database in the production system **110** corresponding to times in the past in between the times as which point-in-time copies are made.

The storage allocation manager **365** provides the functionality of saving data retrieved from the production database system **110**. For example, the point-in-time copy manager **310** may call APIs of storage allocation manager to save blocks of data retrieved from the production database system **110**. The storage allocation manager **365** keeps track of the various versions of each block of data that may be obtained from the production database system **110**. For a given time point, the storage allocation manager **365** can be requested to provide the latest version of a block of data obtained before the given time point. The storage allocation manager **365** can also be used for making copies of blocks of data. If a block of data is copied for read-only purposes, the storage allocation manager **365** allocates only sufficient storage to keep a pointer of reference to the exiting block of data. However, if an attempt to write to the copied block of data is made, the storage allocation manager **365** allocates sufficient storage to make an actual copy of the block of data to avoid updating the original block of data.

The file sharing manager **370** allows files stored in the storage system data store **390** to be shared across computers that may be connected with the database storage system **100** over the network. The file sharing manager **370** uses the file sharing system **120** for sharing files. An example of a system for sharing files is a network file system (NFS). A system for sharing files may utilize fiber channel Storage area networks (FC-SAN) or network attached storage (NAS) or combinations and variations thereof. The system for sharing files may be based on small computer system interface (SCSI) protocol, internet small computer system interface (iSCSI) protocol, fiber channel protocols or other similar and related protocols. In some embodiments, the database storage system **100** may utilize a logical volume manager. Sharing a file stored in the storage system data store **390** using the file sharing manager **370** allows a remote computer, for example, the virtual database systems **130** to access the data in the shared file. A remote system may be able to read and write from/to the file shared by the storage system data store **390**. In an embodiment, files are organized in a format emulating a given file system disk layout, such as the file system of WINDOWS operating system called NTFS or the UNIX file system (UFS).

The virtual database manager **375** receives requests for creation of a virtual database for a virtual database system **130**. The request for creation of a virtual database may be sent by a database administrator using the administration system **140** and identifies a production database system **110**, a virtual database system **130**, and includes a past point-in-time corresponding to which a virtual database needs to be created. The virtual database manager **375** creates the necessary files corresponding to the virtual database being created and shares the files with the virtual database system **130**. The database administrator for a virtual database system **130** may be different from a database administrator for the production database system **110**.

The interface manager **330** renders for display information necessary for display using the administration system **140**. A database administrator user can see information available in the storage system data store **390** as well as take actions executed by the database storage system. For example, a database administrator can see the different production databases stored in the storage system data store **390** obtained from different production database systems **110**. As another example, the database administrator can request the database storage system **100** to make a PIT copy of a database stored on a production database system **110** at a particular point-in-time. In an embodiment, the interface manager **330** allows external applications to access information of the database storage system **100**. For example, the database storage system may provide application programming interface (API) to allow third party vendors to write applications based on database storage system **100**. In an embodiment, the interface manager **330** provides web services that allow web applications to access information available in the database storage system **100**. For example, the database storage system can be part of a cloud computing environment. A third party vendor can use web services to implement various workflow scenarios based on VDBs, for example the various workflow scenarios described herein. This allows automation of the workflow scenarios based on VDBs.

The system configuration manager **315** allows a database administrator using the administration system **140** to setup or change the configuration of the database storage system **100**. For example, when the database storage system is being initially setup or at a later stage, the system configuration manager **315** allows a database administrator user or an agent to specify production database systems **110** and virtual database systems **130** to connect to. The system configuration manager **315** also allows a user with appropriate roles and privileges to setup policies specifying the schedule with which the point-in-time copy manager **310** retrieves PIT copies of databases in the production database systems **110** as well as the frequency and the times at which the transaction log manager **320** retrieves updates to online transaction logs from the production database systems **110**. In an embodiment, a schedule can specify the frequency and times during the day for the PIT and log retrieval actions or it could be an a periodic schedule specifying the calendar days when the same action should take place.

In an embodiment, policies can be defined by a database administrator and stored in the system configuration manager **315** for various operations associated with the loading of point-in-time copies from production database systems **110**, loading of transaction logs from the production database systems **110**, purging of information from the database storage system **100** including point-in-time copies of databases and transaction log information, and provisioning of virtual database systems. A policy specifies rules for executing the specific operation. For example, a policy may specify the operation to be executed based on a predetermined schedule. A policy may determine when to purge PIT copies stored in the database storage system **100** based on number of PIT copies that have been accumulated for a production database. A policy may measure storage availability to determine when to purge information. For example, if the amount of storage available reaches below a threshold level, old PIT copies of selected databases may be purged. The policy may also specify priority of production databases to be used before purging information, for example, low priority database information is purged before purging high-priority database information. In a particular workflow scenario, a policy may determine when to obtain new information from a production database and automatically update VDB information and provision the updated VDB based on the new information.

A virtual database system **130** includes a database server **360** and a VDB system library **380**. The database server **360** is similar in functionality to the database server **345** and is a computer program that provides database services and application programming interfaces (APIs) for managing data stored on a data store **350**. The data managed by the database server **360** may be stored on the storage system data store **390** that is shared by the database storage system **100** using a file sharing system **120**. The VDB system library **380** contains program code for processing requests sent by the database storage system **100**. In alternative configurations, different and/or additional modules can be included in a virtual database system **130**.

FIG. **4** shows the interactions between the database storage system **100** and the production database system **110** to make point-in-time copies of the data stored in a database in the production database system **110**. The point-in-time copy manager **310** sends **405** a request to the vendor interface module **335** of the production database system **110** for retrieving data associated with a database of the production database system **110**. In an embodiment, the request **405** is sent using the secure shell or SSH network protocol that allows data to be interchanged between two networked devices. The request **405** may be sent in response to a request from the administration system **140** or may be configured as a periodically scheduled action. For example, the database storage system **100** may be configured to send **405** a request to the production database system **110** at a predetermined time every day. The system environment illustrated in FIG. **4** does not require a process dedicated with the database storage system **100** to be constantly executed on the production database system **480**. This is beneficial to the production database system **480** since a process dedicated to sending information to the database storage system **100** may consume significant resources of the production system and may not be desirable. Hence, the database storage system sends the requests **405**, **450** whenever it needs information from the production database system **480**.

The production database system **480** sends the requested data to the point-in-time copy manager **310**. If the request **405** is the first request for data associated with a database stored on the production database system **110**, the production database system **480** sends the data of the entire database in reply. In response to subsequent requests **405**, the production database system **480** sends only the data of the database blocks that changed since the last time a reply was sent **430** in response to a previous request **405**.

In an embodiment, the vendor interface module **335** sends **410** a request to the database server **345** to collect the information required for the reply **430**. The vendor interface module **335** also loads the program code available in the production system library **385**. The database server sends **415** a request for the necessary data to the data store **350** and receives the requested data in response **420**. The database server **345** sends **425** the requested data to the vendor interface module **335** in response to the request **410**. The vendor interface module **335** invokes **470** the production system library **385** to package the data received **425** from the database server into a format that can be processed by the point-in-time copy manager **310**. The production system library **385** sends **430** the requested data stream that is formatted appropriately to the point-in-time copy manager **310**. The production system library **385** sends **430** the information sent **425** by the database server to the point-in-time copy manager **310**. The vendor interface module **335** in conjunction with the

program code of the production system library **385** builds the data stream for processing by the database storage system **100**.

In other embodiments, the vendor interface module **335** in conjunction with the production system library **385** obtains the required data directly from the data store **350** and sends **430** the data to the point-in-time copy manager **310**. Typically, these embodiments are beneficial when the database server **345** does support appropriate APIs for extracting the necessary information. In these embodiments, the production system library **385** includes code to analyze the structures of the files of the database stored in the data store **350** and also includes code to process metadata associated with database blocks stored in the data store **350** to find database blocks that changed since a previous time point.

The reply **430** is a stream of data comprising database blocks that may be stored in multiple files in the data store **350**. The stream of data corresponding to the reply **430** may interleave information associated with the different database blocks, for example, database blocks obtained from different files may be interleaved. Hence, the program code of the point-in-time copy manager **310** processes the data stream without assuming any particular order of the database blocks received in the data stream. These database blocks may also belong to different databases.

FIG. **5** shows a flowchart of the process illustrating the processing of a stream of data received from a production database system **110** by the point-in-time copy manager **310**. The point-in-time copy manager **310** receives **510** the stream of data including blocks changed since the last PIT copy. The point-in-time copy manager **310** processes the stream of data to identify **515** database blocks in the stream of data. Each database block includes metadata that contains information regarding the database block, for example, database object this block belongs to, the size of the database block, the file from which the database block was obtained, the offset within the file where the database block was stored, and a log sequence number that specifies the order in which database blocks are updated in the database in the production database system **110**.

The point-in-time copy manager **310** analyzes **520** the metadata for each database block to determine if the database block needs to be stored in the storage system data store **390** or it can be eliminated. For example, the log sequence number in the metadata of the database block may indicate that even though the production system library **385** sent **430** the database block along with the data stream, the database block was never updated since the last reply **430** received from the production system library **385**. Hence, the block need not be stored in the storage system data store **390** and can be skipped. Other examples of database blocks that need not be stored include temporary database blocks, session specific database blocks, and empty database blocks that have no data written in them. Another example of database blocks that need not be stored includes database blocks that are not meaningful or inaccessible to database software. Another example includes database blocks that have been marked deleted, emptied, or invalidated by database software.

In the above embodiment, the information sent **430** by the production database system **480** included unnecessary blocks that were eliminated after the data stream was received by the database storage system **100**. In other embodiment, some or all of the unnecessary blocks may be eliminated while the data stream is built by the production system library **385**. In this embodiment, the data stream sent **430** to the database storage system **100** by the production database system **480** is reduced in size resulting in efficient communication between the two systems.

By skipping database blocks that do not need to be stored as well as by using compression of the stored database blocks, the database storage system may achieve significant savings in terms of storage required for the database files compared to the production database system for the data corresponding to the same database. For example, the storage space occupied by the data corresponding to a production database in the storage system data store **390** may be a quarter of the space occupied by the production database in the production DB data store **350**. Note that the entire information corresponding to the production database system is obtained by the first PIT copy. Subsequent PIT copies obtain only the changed information in the production DB and can be much smaller than the information contained in the first PIT copy.

If the point-in-time copy manager **310** determines **525** that a database block in the data stream can be skipped, the point-in-time copy manager **310** proceeds to identify **515** the next database block for processing. In an embodiment, the point-in-time copy manager **310** uses the database block size available in the stream metadata to identify database block boundaries in the stream of data. Each block is then processed accordingly.

If the point-in-time copy manager **310** determines that the database block in the data stream needs to be stored in the data storage system data store **390**, the point-in-time copy manager **310** analyzes the database block metadata to map **530** the database block to a database file and a location within the file. The point-in-time copy manager **310** sends **435** a request to the storage allocation manager **365** to save **535** the database block. The storage allocation manager **365** stores **440** the database block in the appropriate file associated with database block in the storage system data store **390**. The point-in-time copy manager **310** checks **540** if the data stream is processed completely. If there is unprocessed data remaining in the data stream, the point-in-time copy manager **310** proceeds to identify the next block of data for processing.

The storage allocation manager **365** may keep several different versions of the database block in the storage system data store **390** corresponding to the data in the database block if it is updated at different points in time. The file in which the database block is saved comprises a file header including metadata associated with the file and a sequence of database blocks. Each vendor specific database server **345** organizes the database information as a set of files that the database server **345** is capable of processing. The organization of information using the set of files for the database may be vendor specific and the database storage system incorporates the program logic to organize the database information in vendor specific organization of files. The point-in-time copy manager **310** creates a set of files structure that may be similar to the set of files of the database in the data store **350**. However, the information in the storage system data store **390** may include multiple versions of the database blocks, each corresponding to updated information at different points in time. In an embodiment, the storage allocation manager **365** stores the database blocks associated with the files in an efficient manner, such that a copy of a database block is made only if the database block was updated for a point-in-time. For example, if a block B**1** is updated at time T**1** but not at time T**2**, whereas a block B**2** is updated at time T**1** and T**2** both, the data structure of the storage system data store **390** does not keep a copy of the database block B**1** for time T**2** whereas it keeps a version of the database block B**2** for time T**2**.

FIG. **4** also illustrates the interaction of the transaction log manager **320** with the production system library **385**. The transaction log manager **320** retrieves incremental changes made to the transaction logs in a database in the production database system **110** since a previous time point. In an embodiment, the request **445** is sent using the secure shell or SSH network protocol. The request **445** may identify the database for which information is required and provide a time value corresponding to the previous time point the transaction log information was received. The production system library **385** sends **450** the requested information in response to the request **445** to the transaction log manager **320**. The vendor interface module **335** may obtain the requested information either by calling the database server **345** APIs or by directly interacting with the data store **350**, as described above. The incremental changes to the database logs obtained from the production database system **110** are saved by the transaction log manager **320** by sending a request **460** to the storage allocation manager **365** that stores **440** the information in the storage system data store **390**.

FIG. **6** shows a process for copying the transaction log files from a production database system **110** to the database storage system **100**. The transaction log manager **320** sends **600** a request to the production database system **110** for retrieving the updates to transaction logs since the last update was received by the transaction log manager **320**. The transaction log manager **320** receives **610** the response from the production database system **110** as a data stream. The transaction log manager **320** analyzes the data stream received to determine **620** the log file to which the transaction log data needs to be written. It is possible that the data received in a data stream needs to be written to multiple log files. The transaction log manager **320** writes **630** the online transaction log data from the data stream to the appropriate log file.

In an embodiment, the transaction log manager **320** waits **640** a predetermined interval of time between log file updates and sends **650** the next request to the production database system **110** to check if new updates to the transaction log updates are available. If no updates were made to the production database during this time interval, the production database system **110** informs the transaction log manager **320** accordingly. If no new updates to transaction log for this time interval are available, the transaction log manager **320** waits **640** for another interval of time. If the response from the production database system **110** indicates that updates to transaction logs are available, the transaction log manager **320** sends **600** the next request to the production database system **110** for retrieving the next update to the transaction logs.

The incremental changes to the transaction logs may be obtained by the transaction log manager **320** much more frequently compared to the point-in-time copy made by the point-in-time copy manager **310**. For example, the point-in-time copy manager may make a point-in-time copy of a database stored in the production database system **110** once a day whereas the incremental changes to the transaction logs may be obtained by the transaction log manager **320** every five minutes. Obtaining incremental changes to the transaction logs at a high frequency provides the ability to recreate a copy of a database from the production database system **110** at a time point in between the times that a point-in-time copy is made by the point-in-time copy manager **310**.

The production database system **110** may reuse the transaction log files in a circular fashion, thereby overwriting the previous log files. However, the database storage system **100** creates a new log file each time it determines to close the log file to which data is currently being written to start writing to a different log file. FIG. **7** compares the log files of the production database system **110** with the log files of the database storage system **100**. The log files **710** for the production database system represent online transaction log files. A limited number of files are typically allotted for storing the online transaction logs. For example, FIG. **7** shows three files **710**(*a*), **710**(*b*), and **710**(*c*) allotted by the production database system **110** for storing the online transaction logs.

As shown in FIG. **7**, the arrows **730** indicate a change of the transaction log file to which the transaction logs are being written by the production database system **110** at a given time Ti (the times T**1**, T**2**, T**3**, are assumed monotonically increasing). For example, at time T**1**, the production database system **110** stopped writing the transaction logs to the file **710**(*a*) and started writing the transaction logs to the file **710**(*b*). Similarly at time T**2**, the production database system **110** stopped writing the transaction logs to the file **710**(*b*) and started writing the transaction logs to the file **710**(*c*). At time T**3**, the production database system **110** stopped writing the transaction logs to the file **710**(*c*) and decided to reuse the transaction log file **710**(*a*). Before reusing a transaction log file, the production database system **110** ensures that the transaction logs available in the transaction log file are applied to the appropriate database. The log file changes at times T**4**, T**5**, T**6** are similar to the changes described above. Hence, the production database system may typically reuse the transaction log files in a circular fashion to reuse storage.

The database storage system does not use a circular reuse strategy for log file data because the database storage system keeps the historical information for a much longer time determined by the log retention policy, based on the transaction logs. Keeping the historical information based on the transaction logs provides the ability to create VDBs for past time points. VDBs can be created for past time points as long as transaction logs necessary to reconstruct the database snapshot corresponding to the past time points are available. A strategy based on circular reuse of transaction log files results in earlier transaction logs being overwritten. Hence, a database system using circular reuse strategy for the log files can only reconstruct database snapshots based on the transaction logs for recent time points for which the transaction logs have not been overwritten.

The logs files **720** stored in the database storage system **100** are retained log files. The arrow **740** represents transfer of information from a transaction log file **710** of the production database system **110** to the retained log file **720** of the database storage system **100**. Each arrow **740** may correspond to several requests **445** being sent from the transaction log manager **320** to the production database system **110** and several responses being sent **450** by the production database system **110** that are processed by the transaction log manager **320** and stored.

For example, arrow **740**(*a*) indicates copy of information from log file **710**(*a*) to **720**(*a*) during the time interval T**1** to T**2**. At time T**2**, the production database system started writing transaction logs to file **710**(*b*). The database storage system creates a new log file **720**(*b*) and arrow **740**(*b*) indicates the transfer of transaction log information from file **710**(*b*) to log file **720**(*b*). The above process continues, but at time T**3**, even though the production database system starts reusing the log file **710**(*a*), the database storage system creates a new log file **720**(*d*). Arrow **740**(*d*) indicates copy of transaction log information to log file **720**(*d*). Accordingly, the transaction log information from the same transaction log file of the production database system **110** may be copied to multiple log files in the database storage system **100** at different times.

For example, the information in transaction log file **710**(*a*) is copied to log file **720**(*a*) between T**0** and T**1**, to log file **720**(*d*) between T**3** and T**4**, and to log file **720**(*g*) between time T**6** and T**7**. The database storage system **100** avoids reuse of the log files to keep the transaction log information for as long as possible as determined by the log retention policy. This allows a user to recreate a snapshot of a database at a previous time point for which the transaction log information is available.

FIG. **8** illustrates the information obtained at different points in time by the database storage system **390** from various production database systems **110** that is stored in the storage system data store **390**. FIG. **8** shows information related to two databases, DB**1** and DB**2** obtained from the production database system **110**. The information **850** correspond to data obtained for database DB**1** whereas the information **860** correspond to the data obtained for database DB**2**. The information **850** or **860** comprises a set of database blocks and a set of transaction logs. The information **850**(*a*) represents the first PIT copy of database DB**1** obtained from the production database system **110**. The information **850**(*b*) represents the first transaction log update for the database DB**1** since the first PIT copy and the information **850**(*c*) represents the second transaction log update for the database DB**1** since the first PIT copy. The information **850**(*d*) represents second PIT copy of the database DB**1**. The information **850**(*d*) stores only the database blocks that were changed in the database DB**1** since the first PIT copy was made. The information **850**(*e*) represents the first transaction log update for the database DB**1** since the second PIT copy. Similarly the information **860** correspond to the database DB**2**. The time Ti indicated next to a information **850** corresponds to the time that information was copied in the structure. For a PIT Copy (without log updates, for example, **850**(*a*) or **850**(*d*)) made by a PIT copy manager **310**, the time Ti represents the time of the last update made to the database blocks before the PIT copy was made. For information corresponding to a log update, for example, **850**(*b*), **850**(*c*), or **850**(*e*), the time Ti represents the time of the last transaction log in the corresponding set of the transactions logs stored.

The arrow **810** shown in FIG. **8** represents the step of creating the files representing a read/write copy of a database based on the information **850** as performed by the virtual database manager **375**. The arrows **830** represent the step of making the files **870** available to the virtual database system **130** via the file sharing system **120**. FIG. **9** is a flowchart of the process for creating a virtual database. The virtual database manager **375** receives **905** a request to create a virtual database for a Virtual Database System **130**. The request to create a VDB may be received from the administration system **140**. The request to create a VDB may include details of the production database system **110** and the corresponding database that needs to be made available as a VDB, the virtual database system **130** for which the VDB needs to be created, and a past time point Tn for which the database snapshot needs to be created as a VDB.

The virtual database manager **375** identifies **910** the recent most PIT copy associated with time Tj, such that Tj<Tn. The virtual database manager **375** further identifies **915** a portion of the log file updates for the time period from Tj to Tn. The read/write file structure **870** is created **920** by making storage efficient copies of the database blocks in the identified PIT copy and the appropriate portions of the log files. The appropriate transaction logs can be applied to a VDB created based on a PIT copy so as to create a snapshot of the source database for a time point that occurs after the PIT copy was made. Accordingly, even though a PIT copy may be made periodically, for example, daily, a VDB can be created for any time point in between PIT copies by appropriately applying the transaction logs to a previous PIT copy. For example, a PIT copy may have been made from a production database at midnight on a particular date. However a VDB can be created based on the state of the production database at a particular time later during the day, for example, 10:25 am, even though no PIT copy was made at that particular time. The changes in the production database from midnight to the particular time are obtained from the transaction logs.

The mechanism of making storage efficient copies of the file structure is further described herein. The virtual database manager **375** sends **935** (indicated by arrow **830** in FIG. **8**) handles to the read/write file structure to the associated virtual database system **130**. In some embodiments, the virtual database manager **375** makes the file structures available to the virtual database system **130** by sending a request to the file sharing manager **370**. The file sharing manager **370** in response, shares the appropriate files with the virtual database system **130** using the file sharing system **120**. The virtual database manager **375** also sends **930** a request to the virtual database system **130** to perform recovery **930** of the new virtual database by applying the appropriate retained logs to the database blocks. In some embodiments, the recovery of the database is automatically performed by the database when the database server starts in the virtual database system **130**.

FIG. **10** indicates how storage efficient copies are made to create a read/write file structure representing a VDB. As shown in FIG. **10**, the structures **1010** represent the files corresponding to a database on the production database system **110**. The structures Fi and Gi represent database blocks stored in the files **1010** respectively (Fi refers to F**1**, F**2**, F**3**, . . . and similarly Gi refers to G**1**, G**2**, G**3**, . . .). The arrows **1015** represent the process of making PIT copies at different time points Ti. The first PIT copy **1030** made at time T**0** needs to copy all the necessary database blocks of the database. For example, F**1***i* represents a copy of block Fi and block G**1***i* represents a copy of block Gi. The PIT copy **1035** made at time T**1** copies only the blocks that changed since the last PIT copy and may copy much less data compared to the first PIT copy. Similarly at time T**2** another PIT copy **1040** is made copying the database blocks that changed since the previous PIT copy **1035**.

Assuming the PIT copy **1040** is the last PIT copy made for the configuration shown in FIG. **10**, the VDB file structures **1050** are created for time point T**2**. When the structure **1050** are created, the blocks V**11**, V**12**, . . . , V**25** may be implemented as pointers to the actual database block that stores the data. For example, V**11** represents the information in block F**1** and since the block F**1** was never updated during copies made at time T**1** and T**2**, V**11** points at F**11**. V**12** represents the information in block F**2** and since F**2** was updated at time T**1**, V**12** points at the block F**22**. Similarly, V**13** corresponds to block F**3** that was updated at time T**2** and points at the block F**33**.

FIG. **11** illustrates the file structures **1150** created for time point T**1**. Note that U**13** corresponding to block F**3** points at F**13** since the block F**3** was never updated for time point T**1**. Also, U**14** points at block F**24** corresponding to block F**4** copied at time T**1**. None of the structures in **1150** point at PIT copy **1040** since the PIT copy **1040** was made after the time point T**1**.

FIG. **12** illustrates how database blocks stored on the storage system data store **390** may be shared by file structures created for different VDBs. FIG. **12** shows the file structures corresponding to the file **1005** of the production system database **110** created for VDBs as illustrated in FIG. **10** and FIG.

11. As shown in FIG. 12, the block V13 and V14 of the file structure C50 point at the latest copy of the blocks F33 and F34 that are not shared with the VDB files 1150 for time T1. However, block V11 of VDB files 1050 at T2 shares block F11 with block U11 of VDB files 1150 at T1. Similarly block V12 of 1050 shares database block F22 with block U12 of 1150. The sharing of blocks across multiple VDBs results in efficiently utilization of data stored in the storage system data store 390. In case, one of the VDBs attempts to write to a shared database block, a copy of the shared database block is made for the VDB attempting to write. The remaining VDBs that shared the database block continue to share the original database block. Accordingly, any changes to the copied database block are not visible to the remaining VDBs since the changes are specific to the VDB that is writing to the database block.

A VDB may be created using a point-in-time copy of another VDB as a source. For example, assume VDB1 is created and provisioned to a virtual database system 130. Database blocks associated with the VDB are copied when the virtual database system 130 writes to the database blocks for the first time. Point-in-time copies of VDB1 are also made based on a predefined schedule. This allows a user to create a second virtual database VDB2 based on a point-in-time copy of VDB1. Transaction logs of VDB1 are also stored, allowing a user to create the second virtual database VDB2 based on any previous state of VDB1 that may be in-between point-in-time copies of VDB1.

FIG. 13 further illustrates incorporation of log files in the VDB file structures 1350 that corresponds to a database snapshot for a time point T1+t2 that occurs before T2. As shown in FIG. 13, the log file data L1 is copied by the transaction log manager 320 at time T1+t1 and the log file data L2 is copied at time T1+t2. Additional log data L3 written in the production database system 110 is not shown copied to the database storage system and may be copied at a time after T1+t2. The file structure 1350 created for a VDB includes structure VL11 that points to the appropriate log file data representing the log information copied between time T1 and T1+t2, represented by L1 and L2. When the database server at the virtual database system 130 starts, the logs pointed at by structure V11 may be applied to the database blocks 1035 using the database recovery process.

Since the structure 1050 illustrated in FIG. 10, structure 1150 illustrated in FIG. 11, or structure 1350 illustrated in FIG. 13 are read/write structures, the virtual database system 130 is allowed to read from these structures as well as write to them. When the virtual database system 130 writes to a block Vij, space is allocated for the database block and the data of the corresponding database block copied to the space allocated. For example, if the virtual database system 130 writes to the block V11, space is allocated and block F11 copied to the allocated block. Hence the original copy of the block F11 is maintained as a read only copy and the virtual database system 130 is allowed to write to a copy of the appropriate database block created specifically for the virtual database system 130. This can be considered a lazy mechanism for creating copies of the database blocks that copies a database blocks only if the corresponding virtual database system 130 writes to the database block. Since the number of blocks that a virtual database system 130 writes to may be a small fraction of the total number of blocks associated with the VDB, the above structure stores the data associated with the VDB in a highly storage efficient manner. A database block that is not written to by virtual database systems 130 may be shared by several virtual database systems without being copied for a specific virtual database systems 130.

VDB Operations

FIG. 14 illustrates an example of the life cycles of a database in a workflow for making changes to the database or to applications that depend on the database. As shown in FIG. 14, copies of a production database 1405 may be made for several purposes including development, tuning, testing, quality assurance, certification, training, and staging. Making copies of large databases by conventional means can be a slow process. Furthermore, running different copies of databases on different machines results in inefficient usage of the hardware. Various workflow scenarios associated with databases can be simplified and made highly efficient by creating virtual databases instead of making physical copies of the databases. Multiple virtual databases can be stored in a database storage system 100 and the available resources of the system can be utilized efficiently.

The steps performed in a workflow scenario based on VDBs can be significantly different from the operations performed for the same workflow scenario using conventional systems. These steps may be executed by a database administrator of the database storage system 100 or executed automatically using a script. Various operations associated with a virtual database are described below.

The link operation provides information necessary to access a database on a production database system 110 to the system configuration manager 315 of the database storage system 100. The information necessary to access the database enables the database storage system 100 to retrieve data from the production database system 110. The information may include the name of the database, network address of the production database system 110 hosting the database, and access control information. As part of the linking operation, the database storage system may communicate with the production database system 110 to validate the information of the database. The database storage system 100 can retrieve database blocks from the linked database in the production database system 110 and store them in the storage system data store 390. The database blocks stored in the storage system data store 390 can be used to create virtual databases. In some embodiments, linking may specify that only a part of source database needs to be copied rather than the whole source database. For example, in relational databases a part of the source database could be a table space, a set of one or more tables, a subset of a table, or a set of subsets of tables. In an embodiment, a user can specify a script for computing a part of a database.

The load operation retrieves data from a database of the production database system 110 for storage in the database storage system 100. The database needs to be linked to the database storage system 100 before the database can be loaded. If the load operation is retrieving the data of the database for the first time, the entire data available in the database is retrieved. As a result, the first load operation can be slow and may take several hours or days depending on the size of the database and the network bandwidth based on state of the art hardware. Subsequent load operations may take significantly less time since they retrieve only changes in the database since a previous load operation. The load operation is performed periodically to obtain the changes to the database on an ongoing basis. The load operation may obtain database blocks of the database and/or transaction logs representing updates to the database since a previous point in time. The input required for the load operation includes information identifying a previously linked database. If only a part of the source database is specified in linking, only that part will be loaded.

The load operation can also incrementally update information available in a VDB. The information obtained from the production database system **110** by a database storage system **100** may be updated periodically. As the information obtained from the production database system **110** available in the database storage system is updated, the information provisioned to the virtual database system **130** can also be updated. It is possible that the data in the VDB is updated by the virtual database system **130**. In this case, the incremental load identifies the updates made by the virtual database system **130** and compares them with the changes retrieved from the production database system **110**. If there are no conflicts in the two sets of updates, the load operation can succeed by applying the changes of the production database system **110** to the VDB. If there are conflicts, a report of the conflicts may be presented to a database administrator and input requested from the database administrator to help resolve the conflicts. In one embodiment, the conflicts between the updates from the two sources are detected by identifying the database blocks affected by the two updates. If there is no overlap between the database blocks of the two sets of updates, the database storage system **100** determines that there are no conflicts. If only part of source database is specified in linking, only changes to that part will be loaded.

The provision operation creates a virtual database in the database storage system **100** and makes it available to a virtual database system **130**. The virtual database may be created based on a point-in-time copy of a source database or a point-in-time copy of another virtual database. One or more read/write files may be created for the VDB and shared with the virtual database system **130** using the file sharing system **120**. The read/write files include structures that point to database blocks stored in the storage system data store **390**. The input required for the provision operation includes information identifying a previously linked and loaded database or an existing VDB, a previous time point corresponding to the desired state of the database, and information identifying a virtual database system **130** for which the virtual database is being provisioned. In some embodiments, a part of a VDB could be provisioned. Similarly, parts from different VDBs may be provisioned together to form a new VDB. In other embodiments, several VDBs may be provisioned together as a group using application specific coordination scheme. These group oriented provisioning may involve provisioning or coordination of provisioning of application logic or configuration.

The bookmarking operation marks an application significant point in time in one or more virtual databases. The resulting "bookmark" can be used to direct provisioning operation. Typically, the operation is triggered by user or external program through administration system **140**. Database storage system **100** returns a token as the resulted "bookmark" is stored in database storage system **100**. Later, user or external programs can provision the VDB or the group of VDBs to the same application significant point in time using returned token. For example, an external program may wish to capture production database in certain state, such as right after a massive batch processing run. User could invoke bookmarking operation via administration system **140** and save returned token. Later, user can provision the VDB to the same state by supplying saved token. In some embodiments, tokens are in the form of string.

The refresh operation corresponds to the database storage system **100** periodically updating a VDB based on the latest information from the source database system **110**. For example, a VDB may be used for a reporting system that generates report for users to view. The refresh operation automatically loads the latest information periodically from a production database system **110**, for example, daily. The VDB being refreshed is shutdown. The VDB is updated with the latest point-in-time copy of the production database system **110** and the VDB restarted. Accordingly, the users of the corresponding virtual database system **130** see the latest reports based on the latest point-in-time copy of the data in the production database system **110**. In an embodiment, the VDB may also be refreshed based on transaction logs obtained in between point-in-time copies obtained from production database system **110**. The input required for a refresh operation includes information identifying a VDB to be refreshed and a schedule for refreshing the data.

The pre-script operation corresponds to execution of special purpose instructions that perform specific tasks before performing another database storage system **100** operation. For example, a pre-script operation may be performed before provisioning a VDB or a load of a database from the production database server **110**. A database may be used along with applications that require application specific data stored outside the database. When the database is refreshed or loaded, a pre-script operation can be executed to load the application specific data to the database storage system **100**. The input to the pre-script operation may include an executable script specifying the operations to be performed and details of the database storage system **100** operation before which the pre-script operation is performed.

The post-script operation corresponds to execution of special purpose instructions that perform specific tasks after performing database storage system **100** operation. For example, a post-script operation may be performed after provisioning a VDB to a virtual database system **130**. Testing and development of an application using the database in the production database system **110**, can be performed by running a similar application using a testing or development virtual database system **130**. In this scenario, the application specific data copied from the production database server **110** by the pre-script operation may have to be further copied to the virtual database system **130** that runs a corresponding application. The instructions for copying the application specific data from the database storage system **100** to the virtual database system **130** are executed as a post-script operation after the provision operation. The input to the post-script operation includes an executable script specifying the operations to be performed and details of the database storage system **100** operation after which the post-script operation is performed.

The pre-script and post-script operations can be associated with various VDB operations. For example, pre-script operation can be performed before a refresh operation and a corresponding post-script operation performed after the refresh operation to allow copy/installation of specific information before/after the refresh operation. Similarly, pre-script/post-script operations may be associated with other VDB operations including link, load, provision, and export among other operations. For example, during linking or loading data from a source database, pre-scripting/post-scripting operations allow scrubbing of data by using compression, masking, or removing data including columns or rows of database tables. Pre-scripting and post-scripting allows dealing with application data associated with applications using the source database and/or the VDB. Pre-scripting and post-scripting allows management of system environment issues associated with provisioning of VDBs and allows starting/stopping activities before/after a VDB is provisioned.

The share operation corresponds to granting permission to another user in order to allow the user to access a VDB. In an

embodiment, the share operation may include the step of creating a new VDB and provisioning it for sharing with a new user or a set of users. For example, in a test and development environment, after reaching a particular stage of development using a VDB, the VDB may be shared with test users. The input required for a share operation may include information a VDB to be shared, information identifying users with whom the VDB is shared and access control information identifying the level of permissions granted to the users.

The export operation copies the information available in a database from one computer to another. Typically the information is copied to a target computer for assembly as a database. A stage operation corresponds to an export operation that copies the database information to a staging server. A staging server is typically used for performing system level testing of a database before using changes made to the database or to a database application in a production environment. The input to the export operation includes, information identifying the VDB to be exported and information identifying the target machine to which the data from the VDB needs to be exported.

The mask operation corresponds to altering or skipping specific information in a database when the information in the database is being copied. For example, when a copy of a database is made, sensitive information in the source may not be copied to the target. Another example is that data is scrambled when database is provisioned. Examples of sensitive information include credit card information or social security numbers. Example scenarios where database information is masked include making a copy of a production database for testing purposes. Users of the database that perform testing using a VDB may not need the sensitive information stored in the production database system **110**. Other operations that can transform data being copied from a source database include compress and encrypt. The compress operation transforms the data by preserving the original information but the converting the format of the data so that it occupies less space when stored. The encrypt operation transforms the data to a format that cannot be read by applications that do not have the logic to decode the encrypted information. The inputs to the mask, compress, or encrypt operations include information identifying a source VDB and a target database. The target database may itself be a VDB or the data can be exported to a conventional system.

The purge operation deletes information not needed from a VDB. Typically information is purged when it occupies large amount of space and is not needed anymore. For example, a database may be storing event data associated with events occurring in a system over a long period of time. Old data that is not needed any more or data that has been archived can be purged from the database. The purge operation can be performed when the database information is copied by skipping the information to be purged from the copy operation. The inputs for a purge operation can include information identifying a source VDB and a target database. The target database can be a VDB or it can be a conventional database.

The extract, transform, and load (ETL) operations refers to typical operations performed in a data warehousing project. The extract step retrieves data from a source, the transform step modifies the data based on certain operational needs and the load operation loads the data to a target system. The input required by the ETL operations includes information identifying a source database, information identifying a target database, and operations to be performed for transformation of the data. The inputs for the ETL operation can include information identifying a source VDB and a target database. The target database can be a VDB or it can be a conventional database.

The replicate operation transfers changes from the data stored in a source storage system to a target storage system. The data being replicated can either be a VDB or the data stored in the storage system data store **390**, corresponding to the database blocks obtained from one or more production database systems **110**. The source and target storage systems need to be setup appropriately for the replicate operation. Program code for replication on the source storage system may periodically identify the changes in the data stored in the source storage system and send the changes to the target storage system. Similarly, program code on the target storage system may receive the changes form the source storage system and process them appropriately to incorporate the changes. Replication can be used for high-availability by mirroring the data from the source storage system to the target storage system. The target storage system is available for use in case the source storage system becomes unavailable for some reason. The inputs for the replicate operation may include information identifying a source system and a target system.

The backup operation creates a copy of the data available in a storage system such that the backup copy of the storage system can be used to reconstruct information of the original storage system in case the original data is lost. The restore operation recovers the information available in the backup copy and reconstructs the information. Note that any changes in the original storage system since the backup was created may be lost, unless the update information is saved in some format. In some embodiments, the backup information is stored on large storage systems with possibly slow retrieval speed, for example, tape backup systems.

Other VDB operations based on the concepts defined herein can be defined and used for datacenter workflow automation. VDB operations can also be created by combining existing VDB operations. Different workflow scenarios that utilize the above operations based on VDBs or database storage systems **100** are described below. For each workflow scenario, a brief description of the scenario based on conventional systems is compared with the scenario based on virtual databases.

Test and Development Workflow

FIG. **15** illustrates a scenario for a test and development workflow based on a production environment using conventional databases. As shown in FIG. **15**, the production database system **1505** includes a database **1500** used in a production environment. Testing and development of software used in the production environment by conventional systems may require multiple copies of data stored in the database **1500**. As shown in FIG. **15**, the database **1500** is copied **1550** to the data store **1515** of a development system **1510**. Development activities may be performed on the development system **1510** for certain period of time. Periodically, the database in data store **1515** is further copied to a data store **1525** in a test system **1520** for performing testing of the software and/or the database. Issues found in the test system **1520** may provide feedback **1575** that may require further development activities. The process of development and testing may be repeated multiple times. At certain stage, the database may be copied from the test system **1520** to the data store **1535** of the quality assurance (QA) system **1530** for quality assurance that may include testing of performance, system integration, certification, and user acceptance. Feedback **1570** based on QA system **1530** may require further development using the development system **1510**. The overall process of development,

testing and QA may be repeated multiple times. When satisfactory QA testing is performed, the database may be further copied to the data store **1545** of a staging system **1540**. The final changes in the software or database are propagated **1560** to the production database system **1505**, for example, via an upgrade procedure.

FIG. **16** illustrates the scenario for the test and development workflow based on virtual databases. Several steps requiring copies of database made by the workflow described in FIG. **15** are eliminated as a result of the use of virtual databases. A database **1500** from the production database system **1505** is linked and loaded **1665** to the database storage system **100**. A virtual database corresponding to the database **1500** is provisioned **1640** to the development system **1610**. The virtual database created for the development system **1610** can be refreshed **1670** multiple times based on a schedule. When the development activity on the VDB reaches a particular stage, the VDB is shared with a test system **1615**, thereby providing appropriate access to the users of the test system **1615**. Sharing of the development VDB with the test VDB may involve creating a test VDB based on a point-in-time copy of the development VDB. Feedback **1575** provided by the test system **1615** may require repeated provision **1640**, refresh **1670**, and share **1645** operations. When the development and testing reaches a particular stage, the VDB is further shared **1650** with a QA system **1630** and stored in the data store **1635**. Sharing of the test or development VDB with the QA system may require creating a QA VDB based on a point-in-time copy of the corresponding test/development VDB. Alternatively, the development VDB is exported to the QA system. A VDB may also be staged **1655** directly to the data store **1645** of the staging system **1640**.

In some organizations, different activities involved in a workflow may be performed by different physical locations. For example, production server may be located in one site of the organization whereas development and testing may be performed in another site of the organization. The other site performing development and testing may be offshore, resulting in slow network communication between the two sites. In this scenario, the development system **1510** and test system **1520** shown in FIG. **15** may be available on one site and the remaining systems including the production system **1500**, the QA system **1530**, and the staging system **1540** on a different site.

FIG. **17** shows the interaction between the various systems for this scenario. As shown in FIG. **17**, the sites are named first site **1765** and second site **1760**. A database storage system **1715** is available on the first site **1765** and a second database storage system **1705** is available in the second site **1760**. A database stored in the production database system **1505** is linked and loaded **1775** into the database storage system **1715** in the first site **1765**. The data corresponding to the database is replicated **1725** from database storage system **1715** to the database storage system **1705**. The replication operation **1725** may also be combined with other operations including masking, purging, compression, and encryption. The information may have to be masked and purged since the development/testing may be offshore and the users in the second site **1760** may not have access to specific information available in the production database. The information may also be compressed to reduce the time taken to transfer the data over the network and encrypted to avoid the data being stolen. The database is provisioned **1740** and refreshed **1770** for the development system **1610** and shared **1745** with the test system **1615** as necessary. Changes made to the database stored in the storage system data store **1710** as a result of the testing and development can be propagated back to the database storage system **1715** and stored in the storage system data store **1720**. The propagation of these changes can be performed via a replication **1730** operation that can be combined with compression and encryption. The updated database in database storage system **1715** is exported **1750** to the QA system **1630** and/or exported **1755** to the staging system **1640**.

Backup and Restore

FIG. **18**(*a*) illustrates the scenario for backup and restore of databases. There may be multiple database systems **1810** in an enterprise that are copied **1825** to the data store **1820** of the backup system **1815**. The backup system **1815** may store the backup data in persistent memory, for example, a large disk storage unit and/or use a tape backup unit. In conventional systems the operation copy **1825** corresponds copying database blocks in the database **1810** or to exporting the data in the database **1810** to one or more files, copying the files to the backup system **1815** to be stored in the data store **1820**. Some of the database systems **1810** may store snapshots of the databases on the system that also need to be backed up. A database system **1810** may mirror a database using another database system and synchronize changes in the mirrored database with the original database **1810**. The mirror database may need to be backed up into the backup system **1815**. In some systems additional standby databases may be used along with a database **1810** to protect the data from failures and disasters. The standby databases may also be backed up using the backup system **1815**. An example of a vendor specific utility that helps with backups of databases is RMAN for use with ORACLE databases.

FIG. **18**(*b*) illustrates the scenario for restore of databases using a database storage system **1890**, replacing the need for traditional backup and recovery. In this embodiment, the database storage system **1890** itself acts as storage for copies of the databases **1860** in the database systems **1865**. The copy operation **1825** is obviated by the link and load operation **1830**. The advantages of using link and load operations supported by the database storage system **1890** are that it transfers much smaller amount of data from the database **1860** to the database storage system **1890** compared to full and incremental backups. Furthermore, subsequent updates of databases **1860** performed using the link and load **1830** operations transfer only the changes that occur in the databases **1860** on an ongoing basis, without the need to repeat a full load. As a result, the amount of data transferred from the databases **1860** to the storage system data store **1840** is significantly smaller than in a backup solution. Therefore, much less storage space is occupied by the data in the storage system data store **1840** and the transfer of data from the databases **1860** to the storage system data store **1840** requires much less time.

In another embodiment, the data available in the storage system data store **1840** is backed up **1855** using a backup system **1845**. The backup operation **1855** may initially copy the entire data available in the storage system data store **1840** and subsequently copy **1855** incremental changes of the data stored in the storage system data store **1840**. The amount of data stored in the storage system data store **1840** can be significantly less than the amount of data stored by the data store **1820** of the backup system **1815** since only changes made to the databases **1860** are stored in the storage system data store **1840**. Hence the time required to link/load the data in databases **1860** to the storage system data store **1840** combined with the time taken to backup **1855** the data of storage system data store **1840** can be significantly less than the time taken by the backup operations **1825** in a large enterprise, especially when it comes to the load and time required from the source databases.

Maintaining Database Replicas

In several workflow scenarios, information in a source database is periodically copied to a target database. For example, information may be copied from a source database to a target database used for recovery of information in case the source database is destroyed in a disaster (the process known as disaster recovery). Information may also be copied to one or more databases to increase the availability of the data to users. For example, if the source database is down for maintenance or for other reasons, the target database can be made available to the users. In some usage scenarios, information is copied from a source database to a target database that is used for reporting purposes. The execution of reports on a production database system may cause significant load on a database. Since the production database system is used for transaction processing, it is preferred that a different server synchronized with the database on the production database system be used for generating reports. The target database is updated frequently to provide up-to-date reports using the reporting infrastructure. Another scenario that requires copy of information from a source database to a target database is the migration of databases from one machine to another. Migration of databases may be required when an enterprise upgrades software to newer versions, for example, upgrades to a newer version of operating system, a newer version of database management system, a newer version of an application, or upgrade to new hardware. Migration of databases may also be required from one physical location to another, for example, when a company is acquired by another company.

FIG. **19** illustrates a system environment for copying information from one or more source database systems **1905** to target database systems **1905**. FIG. **19** illustrates the copy or transfer **1950** of information from a source data store **1935** in a source database system **1905** to a target data store **1940** in a target database system **1910**. In other embodiments, information from one source data store **1935** may be transferred to more than one target data store **1940**. Alternatively, information in more than one source data store **1935** may be transferred **1950** to a single target data store **1940**.

Various parameters related to the copy **1950** operation including the rate of transfer, frequency of transfer, type of information being transferred may depend on the specific scenario. The source database systems **1905** and the target databases **1910** may be situated in different physical locations, for example, geographically separate locations illustrated as the first site **1955** and the second site **1960**. Typically machines situated in different physical locations have slow network communication compared to machines situated in the same physical location. Embodiments described herein apply to source and target database systems situated in the same physical location as well as different locations.

FIG. **20** illustrates a system environment based on virtual databases stored in database storage systems **100** for implementing a workflow scenario conventionally implemented as shown in FIG. **19**. As shown in FIG. **20**, the data in the databases stored in source data stores **1935** is linked and loaded **2020** to the storage system data store **2025** of the source database storage system **2005**. The operation **2020** may include subsequent load operations performed to update the data in the storage system data store **2025** based on updates in the source database system **1905**. The data in the storage system data store **2025** of the source database storage system **2005** is transmitted **2015** to the storage system data store **2030** of the target database storage system **2010**. The operation **2015** may be a copy operation that copies the entire information in the storage system data store, a backup operation, or a replicate operation that incrementally copies updates in storage system data store **2025** to the storage system data store **2030**.

In the scenario of migration of databases, the operation **2015** may copy the entire data in the storage system data store **2025**. In the scenario of replication, the changes in the storage system data store **2025** may be copied periodically to the storage system data store **2030**. The changes to storage system data store **2030** may be applied to VDBs provisioned to target database systems **1910** using the refresh operations. If any changes are made to the VDBs by the target database system **1910**, the changes may be propagated back to the storage system data store **2025**.

The operation **2030** makes databases stored in the storage system data store **2030** available to target database systems **1910**. In the scenario of high-availability systems, the operation **2030** may correspond to provisioning a VDB from the storage system data store **2030** to target database systems **1910**. In the scenario of disaster recovery, the operation **2030** may correspond to exporting a database to the target database systems **1910**. As shown in FIG. **20**, there can be VDBs provisioned **2035** by the source database storage system **2005** to VDB systems **2040**. Equivalent VDBs can be created using the data in the target database storage system **2010** and provisioned **2045** to VDB systems **2050**. Any changes made to the VDBs in the source database storage system **2005** are automatically saved in the storage system data store **2025** and get propagated to the target database storage system **2010** by the transfer operation **2015**.

In one embodiment, the target database storage system **2010** may have all the modules illustrated in FIG. **3** prior to the operation **2015**. In another embodiment, a machine that does not have the modules of a database storage system shown in FIG. **3** may be provided for use as the target database storage system **2010**. For example, a uses may provide a new machine that does not have all the necessary software installed on it to act as a database storage system **100**. In this embodiment, the operation **2015** copies the program code that implements the modules of a database storage system to the target machine along with the data stored in the storage system data store **2025**. The program code copied to the target machine is installed and prepared for execution. Accordingly, the machine provided for use as the target database storage system **2010** is prepared to execute the modules of a database storage system **100**. After the data associated with database stored in the storage system data store **2025** is copied to the storage system data store **2030**, the target database storage system **2010** can perform VDB related operations, for example, creating a virtual database or provisioning **2045** a virtual database to a VDB system **2050**.

FIG. **21** illustrates another embodiment of a system environment based on database storage systems **100** for implementing a workflow scenario conventionally implemented as shown in FIG. **19**. The source database systems **1905** are directly linked and loaded **2110** into the database storage system **2105**. As illustrated in FIG. **21**, the database storage system **2105** may be available in a different site **1960** or physical location as the site **1955** storing the source databases or the two systems may be in the same site. The changes to the source data store **1935** of the source database systems **1905** are loaded **2110** to the database storage system **2105** periodically. The database storage system **2105** acts as the copy of the databases in source data stores **1935** that can be used for disaster recovery. Virtual databases can be created in the database storage system **2105** and provisioned for availability to the VDB system **2150**.

In an embodiment, the database storage system **2105** can also be used in a high availability scenario where it acts as a standby system that can be used when the source database system **1905** is down. The database storage system **2105** acts as a standby database by creating a VDB and provisioning **2115** the created VDB to the VDB system **2150**. The VDB system **2150** can acts as the standby database when the corresponding source database system **1905** is down. The database request that were processed by the source database system **1905** can be processed by the VDB system **2150** while the source database system **1905** is down. When the source database system **1905** is ready to process requests, the changes made to the VDB by the VDB system **2150** are exported to the source storage system. After applying the changes from the VDB system **2150** to the source database system **1935**, the database requests can be diverted back to the source database system **1905**.

FIG. **22** illustrates another embodiment of a system environment based on data storage systems for implementing a workflow scenario conventionally implemented as shown in FIG. **19**. In some enterprises, there may be existing systems that replicate data from source database systems **1905** to target database systems **1910**. Accordingly, it may not be necessary to link and load the data to a database storage system **2200** directly from the source database system **1905** as illustrated in FIG. **21**. As shown in the FIG. **22**, the link load **2265** operation can be performed using the information available in the target database systems **1910** to which information form source database systems **1905** is being copied. Linking and loading the data from the database storage system may result in load on the source database system **1905** that can be avoided by retrieving the appropriate information from the mirror systems, for example, the target database systems **1910**. This leaves the source storage systems **1905** undisturbed while providing the necessary information to the database storage system **2200**.

Workflow for Managing a Data Warehouse

FIG. **23** illustrates a system environment for creating a data warehouse and data marts using data available in databases. The production database system **2305** contains the latest information based on transactions in one or more databases stored in the data store **2330**. Information from one or more production database systems **2305** may be assimilated **2380** into the data store **2340** of an operational data store **2310** for analysis purposes. The data in the operational data store **2310** is further processed **2385** by an extract transform and load (ETL) system **2355**. The data processed by the ETL system **2355** is sent **2375** to the data warehouse system **2315**. The ETL system **2355** may temporarily store the data for processing. The processing performed by the ETL system **2355** allows the data to be stored in the data store **2360** of the data warehouse system **2315** in specific format useful for reporting and analysis operations specific to a data warehouse system **2315**. Subsets of data stored in the data store **2360** may be computed **2370** for storage in data stores **2365** of data mart systems **2320** intended for analysis of the subsets of data for specific purposes. Since data is stored in data stores of several systems described above, the data may be backed up **2350** using a backup system **2325** and stored in a backup data store **2335**. The above process may maintain multiple copies of the same data in different systems even though the data may not have changed. Besides, several different computer systems are used for storing the data, thereby resulting in inefficient utilization of resources.

FIG. **24** illustrates an embodiment of a system environment based on a database storage system **100** for implementing a workflow scenario conventionally implemented as shown in FIG. **23**. The databases in the data store **2330** of the production database system **2305** are linked and loaded **2450** to the database storage system **2400**. After the initial load operation **2450**, subsequent loads **2450** only transfer data that has changed in the corresponding databases in the data store **2330**. A virtual database can be created and provisioned **2455** for use as the operational data store **2310**. The ETL system **2355** processes **2385** the data obtained from the VDB associated with the operational data store **2310** and sends **2375** the processed data to the data warehouse system **2315**. The data stored in the data store **2360** of the data warehouse **2315** is linked and loaded **2460** to the database storage system **2400**. The database storage system **2400** can create VDBs and provision **2470** them by for use by data mart systems **2320**. Systems including the operational data store **2310**, ETL system **2355**, and data mart systems **2320** may not need to store the corresponding databases locally and can utilize the storage system data store **2490** for storing the databases. Furthermore, the process of backing up the various databases in the above workflow is achieved by backing up **2465** the storage system data store **2490** to the data store **2335** of the backup system **2325**. As described in the workflow scenario of backup in FIG. **18**, the backup performed using the database storage system **2400** as shown in FIG. **24** can be more efficient compared to individual backups performed by various systems as shown in FIG. **23**. The backup of storage system data store **2490** is efficient because the amount of data being backed up can be significantly less since the storage system data store **2490** efficiently stores copies of data and also because transferring data from a single system can be more efficient than transferring data from multiple systems.

Computing Machine Architecture

FIG. **25** is a block diagram illustrating components of an example machine able to read instructions from a machine-readable medium and execute them in a processor (or controller). Specifically, FIG. **25** shows a diagrammatic representation of a machine in the example form of a computer system **2500** within which instructions **2524** (e.g., software) for causing the machine to perform any one or more of the methodologies discussed herein may be executed. In alternative embodiments, the machine operates as a standalone device or may be connected (e.g., networked) to other machines. In a networked deployment, the machine may operate in the capacity of a server machine or a client machine in a server-client network environment, or as a peer machine in a peer-to-peer (or distributed) network environment.

The machine may be a server computer, a client computer, a personal computer (PC), a tablet PC, a set-top box (STB), a personal digital assistant (PDA), a cellular telephone, a smartphone, a web appliance, a network router, switch or bridge, or any machine capable of executing instructions **2524** (sequential or otherwise) that specify actions to be taken by that machine. Further, while only a single machine is illustrated, the term "machine" shall also be taken to include any collection of machines that individually or jointly execute instructions **2524** to perform any one or more of the methodologies discussed herein.

The example computer system **2500** includes a processor **2502** (e.g., a central processing unit (CPU), a graphics processing unit (GPU), a digital signal processor (DSP), one or more application specific integrated circuits (ASICs), one or more radio-frequency integrated circuits (RFICs), or any combination of these), a main memory **2504**, and a static memory **2506**, which are configured to communicate with each other via a bus **2508**. The computer system **2500** may further include graphics display unit **2510** (e.g., a plasma display panel (PDP), a liquid crystal display (LCD), a pro-

jector, or a cathode ray tube (CRT)). The computer system **2500** may also include alphanumeric input device **2512** (e.g., a keyboard), a cursor control device **2514** (e.g., a mouse, a trackball, a joystick, a motion sensor, or other pointing instrument), a storage unit **2516**, a signal generation device **2518** (e.g., a speaker), and a network interface device **2520**, which also are configured to communicate via the bus **2508**.

The storage unit **2516** includes a machine-readable medium **2522** on which is stored instructions **2524** (e.g., software) embodying any one or more of the methodologies or functions described herein. The instructions **2524** (e.g., software) may also reside, completely or at least partially, within the main memory **2504** or within the processor **2502** (e.g., within a processor's cache memory) during execution thereof by the computer system **2500**, the main memory **2504** and the processor **2502** also constituting machine-readable media. The instructions **2524** (e.g., software) may be transmitted or received over a network **2526** via the network interface device **2520**.

While machine-readable medium **2522** is shown in an example embodiment to be a single medium, the term "machine-readable medium" should be taken to include a single medium or multiple media (e.g., a centralized or distributed database, or associated caches and servers) able to store instructions (e.g., instructions **2524**). The term "machine-readable medium" shall also be taken to include any medium that is capable of storing instructions (e.g., instructions **2524**) for execution by the machine and that cause the machine to perform any one or more of the methodologies disclosed herein. The term "machine-readable medium" includes, but not be limited to, data repositories in the form of solid-state memories, optical media, and magnetic media.

Additional Configuration Considerations

Throughout this specification, plural instances may implement components, operations, or structures described as a single instance. Although individual operations of one or more methods are illustrated and described as separate operations, one or more of the individual operations may be performed concurrently, and nothing requires that the operations be performed in the order illustrated. Structures and functionality presented as separate components in example configurations may be implemented as a combined structure or component. Similarly, structures and functionality presented as a single component may be implemented as separate components. These and other variations, modifications, additions, and improvements fall within the scope of the subject matter herein.

Certain embodiments are described herein as including logic or a number of components, modules, or mechanisms. Modules may constitute either software modules (e.g., code embodied on a machine-readable medium or in a transmission signal) or hardware modules. A hardware module is tangible unit capable of performing certain operations and may be configured or arranged in a certain manner. In example embodiments, one or more computer systems (e.g., a standalone, client or server computer system) or one or more hardware modules of a computer system (e.g., a processor or a group of processors) may be configured by software (e.g., an application or application portion) as a hardware module that operates to perform certain operations as described herein.

In various embodiments, a hardware module may be implemented mechanically or electronically. For example, a hardware module may comprise dedicated circuitry or logic that is permanently configured (e.g., as a special-purpose processor, such as a field programmable gate array (FPGA) or an application-specific integrated circuit (ASIC)) to perform certain operations. A hardware module may also comprise programmable logic or circuitry (e.g., as encompassed within a general-purpose processor or other programmable processor) that is temporarily configured by software to perform certain operations. It will be appreciated that the decision to implement a hardware module mechanically, in dedicated and permanently configured circuitry, or in temporarily configured circuitry (e.g., configured by software) may be driven by cost and time considerations.

Accordingly, the term "hardware module" should be understood to encompass a tangible entity, be that an entity that is physically constructed, permanently configured (e.g., hardwired), or temporarily configured (e.g., programmed) to operate in a certain manner or to perform certain operations described herein. As used herein, "hardware-implemented module" refers to a hardware module. Considering embodiments in which hardware modules are temporarily configured (e.g., programmed), each of the hardware modules need not be configured or instantiated at any one instance in time. For example, where the hardware modules comprise a general-purpose processor configured using software, the general-purpose processor may be configured as respective different hardware modules at different times. Software may accordingly configure a processor, for example, to constitute a particular hardware module at one instance of time and to constitute a different hardware module at a different instance of time.

Hardware modules can provide information to, and receive information from, other hardware modules. Accordingly, the described hardware modules may be regarded as being communicatively coupled. Where multiple of such hardware modules exist contemporaneously, communications may be achieved through signal transmission (e.g., over appropriate circuits and buses) that connect the hardware modules. In embodiments in which multiple hardware modules are configured or instantiated at different times, communications between such hardware modules may be achieved, for example, through the storage and retrieval of information in memory structures to which the multiple hardware modules have access. For example, one hardware module may perform an operation and store the output of that operation in a memory device to which it is communicatively coupled. A further hardware module may then, at a later time, access the memory device to retrieve and process the stored output. Hardware modules may also initiate communications with input or output devices, and can operate on a resource (e.g., a collection of information).

The various operations of example methods described herein may be performed, at least partially, by one or more processors that are temporarily configured (e.g., by software) or permanently configured to perform the relevant operations. Whether temporarily or permanently configured, such processors may constitute processor-implemented modules that operate to perform one or more operations or functions. The modules referred to herein may, in some example embodiments, comprise processor-implemented modules.

Similarly, the methods described herein may be at least partially processor-implemented. For example, at least some of the operations of a method may be performed by one or processors or processor-implemented hardware modules. The performance of certain of the operations may be distributed among the one or more processors, not only residing within a single machine, but deployed across a number of machines. In some example embodiments, the processor or processors may be located in a single location (e.g., within a home environment, an office environment or as a server

farm), while in other embodiments the processors may be distributed across a number of locations.

The one or more processors may also operate to support performance of the relevant operations in a "cloud computing" environment or as a "software as a service" (SaaS). For example, at least some of the operations may be performed by a group of computers (as examples of machines including processors), these operations being accessible via a network (e.g., the Internet) and via one or more appropriate interfaces (e.g., application program interfaces (APIs).)

The performance of certain of the operations may be distributed among the one or more processors, not only residing within a single machine, but deployed across a number of machines. In some example embodiments, the one or more processors or processor-implemented modules may be located in a single geographic location (e.g., within a home environment, an office environment, or a server farm). In other example embodiments, the one or more processors or processor-implemented modules may be distributed across a number of geographic locations.

Some portions of this specification are presented in terms of algorithms or symbolic representations of operations on data stored as bits or binary digital signals within a machine memory (e.g., a computer memory). These algorithms or symbolic representations are examples of techniques used by those of ordinary skill in the data processing arts to convey the substance of their work to others skilled in the art. As used herein, an "algorithm" is a self-consistent sequence of operations or similar processing leading to a desired result. In this context, algorithms and operations involve physical manipulation of physical quantities. Typically, but not necessarily, such quantities may take the form of electrical, magnetic, or optical signals capable of being stored, accessed, transferred, combined, compared, or otherwise manipulated by a machine. It is convenient at times, principally for reasons of common usage, to refer to these signals using words such as "data," "content," "bits," "values," "elements," "symbols," "characters," "terms," "numbers," "numerals," or the like. These words, however, are merely convenient labels and are to be associated with appropriate physical quantities.

Unless specifically stated otherwise, discussions herein using words such as "processing," "computing," "calculating," "determining," "presenting," "displaying," or the like may refer to actions or processes of a machine (e.g., a computer) that manipulates or transforms data represented as physical (e.g., electronic, magnetic, or optical) quantities within one or more memories (e.g., volatile memory, non-volatile memory, or a combination thereof), registers, or other machine components that receive, store, transmit, or display information.

As used herein any reference to "one embodiment" or "an embodiment" means that a particular element, feature, structure, or characteristic described in connection with the embodiment is included in at least one embodiment. The appearances of the phrase "in one embodiment" in various places in the specification are not necessarily all referring to the same embodiment.

Some embodiments may be described using the expression "coupled" and "connected" along with their derivatives. It should be understood that these terms are not intended as synonyms for each other. For example, some embodiments may be described using the term "connected" to indicate that two or more elements are in direct physical or electrical contact with each other. In another example, some embodiments may be described using the term "coupled" to indicate that two or more elements are in direct physical or electrical contact. The term "coupled," however, may also mean that two or more elements are not in direct contact with each other, but yet still cooperate or interact with each other. The embodiments are not limited in this context.

As used herein, the terms "comprises," "comprising," "includes," "including," "has," "having" or any other variation thereof, are intended to cover a non-exclusive inclusion. For example, a process, method, article, or apparatus that comprises a list of elements is not necessarily limited to only those elements but may include other elements not expressly listed or inherent to such process, method, article, or apparatus. Further, unless expressly stated to the contrary, "or" refers to an inclusive or and not to an exclusive or. For example, a condition A or B is satisfied by any one of the following: A is true (or present) and B is false (or not present), A is false (or not present) and B is true (or present), and both A and B are true (or present).

In addition, use of the "a" or "an" are employed to describe elements and components of the embodiments herein. This is done merely for convenience and to give a general sense of the invention. This description should be read to include one or at least one and the singular also includes the plural unless it is obvious that it is meant otherwise.

Upon reading this disclosure, those of skill in the art will appreciate still additional alternative structural and functional designs for a system and a process for creating virtual databases from point-in-time copies of production databases stored in a storage manager. Thus, while particular embodiments and applications have been illustrated and described, it is to be understood that the disclosed embodiments are not limited to the precise construction and components disclosed herein. Various modifications, changes and variations, which will be apparent to those skilled in the art, may be made in the arrangement, operation and details of the method and apparatus disclosed herein without departing from the spirit and scope defined in the appended claims.

What is claimed is:

1. A method for creating a virtual database system, the method comprising:

receiving different point-in-time copies of a source database, the source database comprising a plurality of database blocks;

storing on a storage system, database blocks for a plurality of different point-in-time copies of the source database, wherein at least some of the stored database blocks are associated with multiple point-in-time copies of the source database;

creating a set of files for a virtual database, each file in the set of files is linked to the database blocks on the storage system associated with a point-in-time copy of the source database; and

mounting the set of files associated with the virtual database on a database server allowing the database server to read from and write to the set of files.

2. The method of claim **1**, further comprising:

receiving a read request for data in the set of files associated with the virtual database from the database server;

accessing data in at least one database block associated with a file in the set of files; and

sending the data in response to the read request.

3. The method of claim **1**, further comprising:

sending a request to receive a point-in-time copy of a source database.

4. The method of claim **1**, wherein the source database is a storage level snapshot of a production database.

5. The method of claim **1**, wherein the source database is a standby database that replicates a production database.

6. The method of claim 1, wherein the virtual database is a first virtual database and the source database is a second virtual database.

7. The method of claim 1, further comprising:

associating the source database with a predetermined policy for managing point-in-time copies of the source database.

8. The method of claim 7, wherein the predetermined policy specifies a schedule for receiving point-in-time copies of the source database.

9. The method of claim 8, wherein the schedule specifies calendar days for receiving point-in-time copies of the source database.

10. The method of claim 8, wherein the schedule specifies calendar days for receiving transaction logs of the source database.

11. The method of claim 7, wherein the predetermined policy specifies a schedule for purging the point-in-time copy after a retention period.

12. The method of claim 7, wherein the predetermined policy specifies purging the point-in-time copy based on availability of space on the storage system.

13. The method of claim 7, wherein the predetermined policy specifies a schedule for purging the transaction logs after a retention period.

14. The method of claim 7, wherein the predetermined policy specifies purging the transaction logs based on availability of space on the storage system.

15. The method of claim 1, wherein the storage system is running on a virtual machine.

16. The method of claim 1, further comprising:

sending program code to a production database system associated with the source database, wherein the program code is configured to send point-in-time copies of the source database.

17. The method of claim 1, further comprising:

receiving information describing transaction logs from the source database wherein the transaction logs represent changes to the source database since a previous point-in-time copy was received.

18. The method of claim 1, further comprising:

receiving information describing transaction logs from the source database, wherein information describing transaction logs represents changes to the source database since a previous receipt of information describing transaction logs.

19. The method of claim 18, further comprising:

managing transaction logs associated with the source database based on a predetermined policy.

20. The method of claim 18, wherein the predetermined policy specifies a schedule for receiving transaction logs of the source database.

21. The method of claim 18, further comprising:

storing the information describing the transaction logs in hierarchical memory storage devices.

22. The method of claim 1, wherein the database server is a first database server and the source database is for a second database server and the version of the first database server is different from the version of the second database server.

23. The method of claim 1, wherein the database server is a first database server and the source database is for a second database server and the first database server is running on an operating system that is different from operating system on which the second database server is running.

24. The method of claim 1, wherein the set of files is a first set of files, the virtual database is a first virtual database, and the database server is a first database server, the method further comprising:

creating a second set of files for a second virtual database, each file in the second set of files linked to the database blocks on the storage system associated with the point-in-time copy of the source database; and

mounting the second set of files associated with the second virtual database on a second database server allowing the second database server to read from and write to the second set of files.

25. The method of claim 24, wherein at least some of the stored database blocks associated with the first set of files are also associated with the second set of files.

26. The method of claim 24, further comprising:

receiving a request to write data to the first virtual database from the database server;

identifying a database block associated with a file in the first set of files associated with the first virtual database.

27. The method of claim 26, wherein at least some of the stored database blocks associated with the first set of files are also associated with the second set of files;

responsive to the database block being also associated with the second set of files associated with the second virtual database, copying the database block; and

linking the copied database block with the file and writing the data to the copied database block.

28. The method of claim 1, wherein the set of files is a first set of files, the virtual database is a first virtual database, the database server is a first database server, and the point-in-time copy is the first point-in-time copy, the method further comprising:

creating a second set of files for a second virtual database, each file in the second set of files linked to the database blocks on the storage system associated with a second point-in-time copy of the source database; and

mounting the second set of files associated with the second virtual database on a second database server allowing the second database server to read from and write to the second set of files.

29. The method of claim 1, wherein receiving point-in-time copies comprises receiving data streams corresponding to the point-in-time copies, wherein each data stream comprises data from database blocks associated with the source database.

30. The method of claim 29, further comprising:

analyzing the data streams received to identify database blocks; and

storing the identified database blocks.

31. The method of claim 29, wherein a data stream corresponding to a first point-in-time copy includes database blocks changed in the source database since a previous point-in-time copy was received.

32. The method of claim 29, further comprising:

analyzing the data streams received to identify database blocks and analyzing the metadata of database blocks to determine the length of the database blocks for processing the data stream.

33. The method of claim 29, further comprising:

analyzing the data streams received to identify database blocks and analyzing the metadata of database blocks to determine whether the database block needs to be stored.

34. The method of claim 29, further comprising:

analyzing the data streams received to identify database blocks and determining not to store the database blocks that are one of temporary database blocks, empty data-

base blocks, or database blocks that did not change since a previous retrieval of point-in-time copy of the source database.

35. The method of claim **1**, wherein mounting the set of files is storage protocol independent.

36. The method of claim **1**, further comprising:

compressing the database blocks prior to storing on the storage system.

37. The method of claim **1**, wherein the source database is a portion of a production database.

38. The method of claim **37**, wherein the portion of the production database comprises a table space.

39. The method of claim **37**, wherein the portion of the production database comprises at least a database table.

40. The method of claim **1**, wherein the database blocks linked with the set of files comprise a portion of the source database.

41. The method of claim **1**, wherein the database blocks linked with the set of files comprise at least a database table associated with the source database.

42. The method of claim **1**, wherein the virtual database is a privileged virtual database that allows access to all information.

43. The method of claim **1**, wherein the virtual database is a non-privileged virtual database that allows access to a subset of information considered non-sensitive information.

44. The method of claim **43**, wherein the virtual database is a non-privileged virtual database that masks sensitive information.

45. The method of claim **44**, further comprising:

storing the bookmark token.

46. The method of claim **1**, further comprising:

associating a point-in-time copy with a bookmark token; and

specifying the bookmark token to specify the point-in-time copy of the source database for use in creating a virtual database.

47. The method of claim **1**, further comprising:

associating the virtual database with one or more privileges specifying accessibility of information to a user with a given privilege.

48. The method of claim **1**, wherein a privilege is one of:

administrator privilege allowing policy management;

owner privilege allowing provisioning of VDBs; and

auditor privilege allowing viewing of information associated with VDBs.

49. The method of claim **1**, wherein the source database is a first source database, the plurality of database blocks is a first plurality of database blocks, the set of files is a first set of files, the virtual database is a first virtual database, and the database server is a second database server, the method comprising:

receiving point-in-time copies of a second source, the second source database comprising a second plurality of database blocks;

storing on the storage system, database blocks for the point-in-time copies of the second source database, wherein at least some of the stored database blocks are associated with multiple point-in-time copies of the second source database;

creating a second set of files for a second virtual database, the second set of files linked to the database blocks on the storage system associated with point-in-time copies of the second source database; and

mounting the second set of files associated with the second virtual database on a second database server allowing the second database server to read from and write to the second set of files.

50. A computer-implemented system for creating a virtual database, the system comprising:

a computer processor; and

a computer-readable storage medium storing computer program modules configured to execute on the computer processor, the computer program modules comprising:

a point-in-time copy manager module configured to:

receive different point-in-time copies of a source database, the source database comprising a plurality of database blocks;

a storage allocation manager module configured to:

store on a storage system, database blocks for a plurality of different point-in-time copies of the source database, wherein at least some of the stored database blocks are associated with multiple point-in-time copies of the source database;

a virtual database manager module configured to:

create a set of files for a virtual database, each file in the set of files linked to the database blocks on the storage system associated with a point-in-time copy of the source database; and

a file sharing manager module configured to:

mount the set of files associated with the virtual database on a database server allowing the database server to read from and write to the set of files.

51. The system of claim **50**, wherein the virtual database manager module is further configured to:

receive a read request for data in the set of files associated with the virtual database from the database server;

access data in at least one database block associated with a file in the set of files; and

send the data in response to the read request.

52. The system of claim **50**, wherein the virtual database manager module is further configured to:

receive a request to write data to the first virtual database from the database server;

identify a database block associated with a file in the first set of files associated with the first virtual database;

responsive to the database block being also associated with the second set of files associated with the second virtual database, copy the database block; and

link the copied database block with the file and write the data to the copied database block.

53. The system of claim **50**, wherein the point-in-time copy manager module is further configured to:

send a request to receive a point-in-time copy of a source database.

54. The system of claim **50**, wherein the point-in-time copy manager module receives point-in-time copies comprising data streams, wherein a data stream comprises data from database blocks of the source database.

55. The system of claim **50**, wherein the point-in-time copy manager module is further configured to:

analyze the data streams received to identify database blocks to be stored.

56. The system of claim **50**, wherein the data stream comprises database blocks changed in the source database since a previous point-in-time copy was received.

57. A computer program product having a computer-readable storage medium storing computer-executable code for creating a virtual database, the code comprising:

a point-in-time copy manager module configured to:

receive different point-in-time copies of a source database, the source database comprising a plurality of database blocks;

a storage allocation manager module configured to:

store on a storage system, database blocks for a plurality of different point-in-time copies of the source database, wherein at least some of the stored database blocks are associated with multiple point-in-time copies of the source database;

a virtual database manager module configured to:

create a set of files for a virtual database, each file in the set of files linked to the database blocks on the storage system associated with a point-in-time copy of the source database; and

a file sharing manager module configured to:

mount the set of files associated with the virtual database on a database server allowing the database server to read from and write to the set of files.

* * * * *