US009578384B2

(12) **United States Patent**
Selim et al.

(10) **Patent No.: US 9,578,384 B2**
(45) **Date of Patent: Feb. 21, 2017**

(54) **SYSTEMS AND METHODS FOR PROVIDING VIDEO ON DEMAND IN AN INTELLIGENT TELEVISION**

(71) Applicant: **Flextronics AP, LLC**, San Jose, CA (US)

(72) Inventors: **Mohammed Selim**, Oakville (CA); **Saulo Correia Dourado**, Oakville (CA)

(73) Assignee: **Flextronics AP, LLC**, San Jose, CA (US)

(*) Notice: Subject to any disclaimer, the term of this patent is extended or adjusted under 35 U.S.C. 154(b) by 0 days.

(21) Appl. No.: **14/847,537**

(22) Filed: **Sep. 8, 2015**

(65) **Prior Publication Data**

US 2016/0066023 A1 Mar. 3, 2016

Related U.S. Application Data

(63) Continuation of application No. 13/970,427, filed on Aug. 19, 2013, now abandoned, and a continuation of

(Continued)

(51) **Int. Cl.**
H04N 21/2543 (2011.01)
H04N 21/262 (2011.01)

(Continued)

(52) **U.S. Cl.**
CPC ***H04N 21/4823*** (2013.01); ***G06F 3/017*** (2013.01); ***G06F 3/0481*** (2013.01); ***G06F 3/04817*** (2013.01); ***G06F 3/04842*** (2013.01); ***G06F 3/04883*** (2013.01); ***H04L 51/32*** (2013.01); ***H04N 1/00448*** (2013.01); ***H04N 5/44*** (2013.01); ***H04N 5/4401*** (2013.01); ***H04N 5/4403*** (2013.01); ***H04N 5/445*** (2013.01);

(Continued)

(58) **Field of Classification Search**
None
See application file for complete search history.

(56) **References Cited**

U.S. PATENT DOCUMENTS

7,174,126 B2 2/2007 McElhatten et al.
8,863,198 B2 10/2014 Sirpal et al.

(Continued)

FOREIGN PATENT DOCUMENTS

EP 2328346 6/2011
EP 2487922 8/2012

OTHER PUBLICATIONS

International Search Report and Written Opinion for International (PCT) Patent Application No. PCT/US13/55589, mailed Dec. 19, 2013 9 pages.

(Continued)

Primary Examiner — Brian T Pendleton
Assistant Examiner — Jean D Saint Cyr
(74) *Attorney, Agent, or Firm* — Sheridan Ross P.C.

(57) **ABSTRACT**

An intelligent television can provide various interfaces for providing video-on-demand (VOD). The user interfaces include unique visual representations and organizations that allow the user to utilize the intelligent television more easily and more effectively. Particularly, the user interfaces pertain to the display of VOD content and better organizations thereof. Further, the user interfaces provide unique process of transitioning between the VOD content.

12 Claims, 47 Drawing Sheets

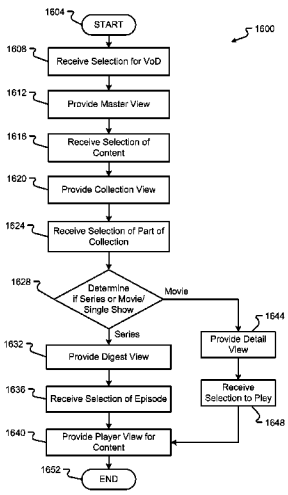

Related U.S. Application Data

application No. 13/970,388, filed on Aug. 19, 2013, now abandoned, application No. 14/847,537, which is a continuation of application No. 13/970,409, filed on Aug. 19, 2013, application No. 14/847,537, which is a continuation of application No. 13/970,420, filed on Aug. 19, 2013, now Pat. No. 9,426,527, application No. 14/847,537, which is a continuation of application No. 13/970,442, filed on Aug. 19, 2013, now Pat. No. 9,185,325, application No. 14/847,537, which is a continuation of application No. 13/970,450, filed on Aug. 19, 2013, now Pat. No. 9,167,187.

(60) Provisional application No. 61/684,672, filed on Aug. 17, 2012, provisional application No. 61/702,650, filed on Sep. 18, 2012, provisional application No. 61/697,710, filed on Sep. 6, 2012, provisional application No. 61/700,182, filed on Sep. 12, 2012, provisional application No. 61/736,692, filed on Dec. 13, 2012, provisional application No. 61/798,821, filed on Mar. 15, 2013, provisional application No. 61/804,942, filed on Mar. 25, 2013, provisional application No. 61/804,998, filed on Mar. 25, 2013, provisional application No. 61/804,971, filed on Mar. 25, 2013, provisional application No. 61/804,990, filed on Mar. 25, 2013, provisional application No. 61/805,003, filed on Mar. 25, 2013, provisional application No. 61/805,053, filed on Mar. 25, 2013, provisional application No. 61/805,030, filed on Mar. 25, 2013, provisional application No. 61/805,027, filed on Mar. 25, 2013, provisional application No. 61/805,042, filed on Mar. 25, 2013, provisional application No. 61/805,038, filed on Mar. 25, 2013.

(51) **Int. Cl.**

H04N 21/266	(2011.01)
H04N 21/431	(2011.01)
H04N 21/47	(2011.01)
H04N 21/472	(2011.01)
H04N 21/482	(2011.01)
H04N 21/422	(2011.01)
H04N 21/462	(2011.01)
H04N 1/00	(2006.01)
H04N 17/04	(2006.01)
H04N 5/44	(2011.01)
H04N 5/50	(2006.01)
H04N 21/43	(2011.01)
H04N 21/437	(2011.01)
H04N 21/81	(2011.01)
H04N 21/442	(2011.01)
H04N 21/485	(2011.01)
H04N 21/4788	(2011.01)
H04N 21/475	(2011.01)
H04N 21/84	(2011.01)
H04N 21/478	(2011.01)
H04N 21/8358	(2011.01)
H04N 5/445	(2011.01)
G06F 3/0481	(2013.01)
H04N 21/488	(2011.01)
H04N 21/61	(2011.01)
H04N 21/439	(2011.01)
H04N 21/435	(2011.01)
H04N 21/432	(2011.01)
H04L 12/58	(2006.01)
H04N 21/258	(2011.01)
H04N 21/45	(2011.01)
G06F 3/01	(2006.01)
G06F 3/0488	(2013.01)
H04N 5/45	(2011.01)
H04N 21/4782	(2011.01)
H04N 21/441	(2011.01)
H04N 21/2187	(2011.01)
H04N 21/4415	(2011.01)
H04N 21/658	(2011.01)
H04N 21/235	(2011.01)
H04N 21/426	(2011.01)
G06F 3/0484	(2013.01)
H04N 21/414	(2011.01)
H04N 21/433	(2011.01)

(52) **U.S. Cl.**

CPC ***H04N 5/44591*** (2013.01); ***H04N 5/45*** (2013.01); ***H04N 5/50*** (2013.01); ***H04N 17/04*** (2013.01); ***H04N 21/2187*** (2013.01); ***H04N 21/235*** (2013.01); ***H04N 21/2543*** (2013.01); ***H04N 21/25808*** (2013.01); ***H04N 21/25891*** (2013.01); ***H04N 21/26291*** (2013.01); ***H04N 21/414*** (2013.01); ***H04N 21/4221*** (2013.01); ***H04N 21/42204*** (2013.01); ***H04N 21/42207*** (2013.01); ***H04N 21/42222*** (2013.01); ***H04N 21/42225*** (2013.01); ***H04N 21/42684*** (2013.01); ***H04N 21/432*** (2013.01); ***H04N 21/433*** (2013.01); ***H04N 21/435*** (2013.01); ***H04N 21/4307*** (2013.01); ***H04N 21/437*** (2013.01); ***H04N 21/4312*** (2013.01); ***H04N 21/4316*** (2013.01); ***H04N 21/4396*** (2013.01); ***H04N 21/441*** (2013.01); ***H04N 21/442*** (2013.01); ***H04N 21/4415*** (2013.01); ***H04N 21/44204*** (2013.01); ***H04N 21/44213*** (2013.01); ***H04N 21/44222*** (2013.01); ***H04N 21/4532*** (2013.01); ***H04N 21/462*** (2013.01); ***H04N 21/4622*** (2013.01); ***H04N 21/47*** (2013.01); ***H04N 21/472*** (2013.01); ***H04N 21/475*** (2013.01); ***H04N 21/478*** (2013.01); ***H04N 21/4753*** (2013.01); ***H04N 21/4755*** (2013.01); ***H04N 21/4756*** (2013.01); ***H04N 21/4782*** (2013.01); ***H04N 21/4788*** (2013.01); ***H04N 21/47202*** (2013.01); ***H04N 21/47205*** (2013.01); ***H04N 21/482*** (2013.01); ***H04N 21/485*** (2013.01); ***H04N 21/488*** (2013.01); ***H04N 21/4821*** (2013.01); ***H04N 21/4826*** (2013.01); ***H04N 21/4828*** (2013.01); ***H04N 21/4858*** (2013.01); ***H04N 21/4882*** (2013.01); ***H04N 21/6125*** (2013.01); ***H04N 21/6175*** (2013.01); ***H04N 21/6582*** (2013.01); ***H04N 21/8126*** (2013.01); ***H04N 21/8133*** (2013.01); ***H04N 21/8166*** (2013.01); ***H04N 21/8173*** (2013.01); ***H04N 21/8358*** (2013.01); ***H04N 21/84*** (2013.01); *G06F 2203/04804* (2013.01); *H04N 21/42219* (2013.01); *H04N 21/4332* (2013.01); *H04N 2005/4407* (2013.01); *H04N 2005/4414* (2013.01); *H04N 2005/4432* (2013.01)

(56) **References Cited**

U.S. PATENT DOCUMENTS

9,021,517	B2	4/2015	Selim
9,066,040	B2	6/2015	Selim et al.
9,167,187	B2	10/2015	Dourado et al.
9,185,325	B2	11/2015	Selim et al.
9,426,527	B2	8/2016	Selim et al.

(56) **References Cited**

U.S. PATENT DOCUMENTS

2003/0208763	A1	11/2003	McElhatten et al.	
2004/0148362	A1	7/2004	Friedman	
2005/0097606	A1	5/2005	Scott, III et al.	
2005/0188402	A1	8/2005	de Andrade et al.	
2005/0289603	A1	12/2005	Cezeaux et al.	
2006/0026647	A1	2/2006	Potrebic et al.	
2006/0031875	A1	2/2006	Yu	
2006/0117365	A1*	6/2006	Ueda	G11B 27/031 725/112
2006/0248557	A1	11/2006	Stark et al.	
2007/0154163	A1	7/2007	Cordray	
2008/0092198	A1	4/2008	Hutten	
2008/0114794	A1	5/2008	Craner	
2008/0114861	A1	5/2008	Gildred	
2008/0133525	A1	6/2008	Ott	
2008/0141307	A1	6/2008	Whitehead	
2009/0106793	A1	4/2009	Tecot et al.	
2009/0160764	A1	6/2009	Myllymäki	
2009/0165045	A1	6/2009	Stallings et al.	
2010/0088724	A1	4/2010	Yamagishi	
2010/0114857	A1	5/2010	Edwards et al.	
2011/0119626	A1	5/2011	Faenger et al.	
2011/0154405	A1	6/2011	Isaias	
2011/0161996	A1	6/2011	Hamano et al.	
2011/0167452	A1*	7/2011	Baumgartner	H04N 5/44543 725/44
2011/0179453	A1	7/2011	Poniatowski	
2012/0033950	A1*	2/2012	Cordray	H04N 5/782 386/296
2012/0144422	A1	6/2012	Han et al.	
2012/0221972	A1	8/2012	Dougall et al.	
2012/0257108	A1	10/2012	Friedlander et al.	
2012/0260284	A1	10/2012	Friedlander et al.	
2012/0272271	A1	10/2012	Nishizawa et al.	
2014/0049651	A1	2/2014	Voth	
2014/0049691	A1	2/2014	Burdzinski et al.	
2014/0049692	A1	2/2014	Sirpal et al.	
2014/0049693	A1	2/2014	Selim et al.	
2014/0052785	A1	2/2014	Sirpal	
2014/0052786	A1	2/2014	de Paz	
2014/0053176	A1	2/2014	Milano et al.	
2014/0053177	A1	2/2014	Voth	
2014/0053178	A1	2/2014	Voth et al.	
2014/0053179	A1	2/2014	Voth	
2014/0053180	A1	2/2014	Shoykher	
2014/0053190	A1	2/2014	Sirpal	
2014/0053191	A1	2/2014	Selim	
2014/0053192	A1	2/2014	Sirpal	
2014/0053193	A1	2/2014	Selim et al.	
2014/0053194	A1	2/2014	Shoykher et al.	
2014/0053195	A1	2/2014	Sirpal et al.	
2014/0053196	A1	2/2014	Selim	
2014/0053197	A1	2/2014	Shoykher et al.	
2014/0053198	A1	2/2014	Sirpal et al.	
2014/0053200	A1	2/2014	de Paz et al.	
2014/0053202	A1	2/2014	Selim	
2014/0053203	A1	2/2014	Csiki	
2014/0053204	A1	2/2014	Milano	
2014/0053205	A1	2/2014	Sirpal et al.	
2014/0053206	A1	2/2014	Shoykher et al.	
2014/0053207	A1	2/2014	Shoykher et al.	
2014/0053208	A1	2/2014	Sirpal et al.	
2014/0053211	A1	2/2014	Milano	
2014/0053212	A1	2/2014	Shoykher et al.	
2014/0053222	A1	2/2014	Shoykher et al.	
2014/0053225	A1	2/2014	Shoykher et al.	
2014/0055673	A1	2/2014	Sirpal et al.	
2014/0059480	A1	2/2014	de Paz et al.	
2014/0059578	A1	2/2014	Voth et al.	
2014/0059589	A1	2/2014	Sirpal	
2014/0059596	A1	2/2014	Dourado	
2014/0059598	A1	2/2014	Milano	
2014/0059599	A1	2/2014	Sirpal et al.	
2014/0059600	A1	2/2014	Dourado	
2014/0059601	A1	2/2014	Sirpal	
2014/0059602	A1	2/2014	Sirpal	
2014/0059603	A1	2/2014	Lee et al.	
2014/0059605	A1	2/2014	Sirpal et al.	
2014/0059606	A1	2/2014	Selim et al.	
2014/0059609	A1	2/2014	Dourado	
2014/0059610	A1	2/2014	Sirpal et al.	
2014/0059612	A1	2/2014	Selim	
2014/0059613	A1	2/2014	Burdzinski et al.	
2014/0059614	A1	2/2014	Shoykher et al.	
2014/0059615	A1	2/2014	Sirpal et al.	
2014/0059635	A1	2/2014	Sirpal et al.	
2014/0059637	A1	2/2014	Chen et al.	
2014/0067954	A1	3/2014	Sirpal	
2014/0068673	A1	3/2014	Sirpal et al.	
2014/0068674	A1	3/2014	Sirpal et al.	
2014/0068683	A1	3/2014	Selim et al.	
2014/0068685	A1	3/2014	Selim et al.	
2014/0068689	A1	3/2014	Sirpal et al.	
2014/0075475	A1	3/2014	Sirpal et al.	
2014/0075476	A1	3/2014	de Paz et al.	
2014/0075477	A1	3/2014	de Paz et al.	
2014/0075479	A1	3/2014	Soto et al.	
2014/0075483	A1	3/2014	de Paz et al.	
2014/0075484	A1	3/2014	Selim et al.	
2014/0109143	A1	4/2014	Craner	
2015/0156548	A1	6/2015	Sirpal et al.	
2015/0156554	A1	6/2015	Sirpal et al.	
2015/0163537	A1	6/2015	Sirpal et al.	
2015/0172765	A1	6/2015	Shoykher et al.	
2015/0189390	A1	7/2015	Sirpal et al.	
2015/0201147	A1	7/2015	Sirpal et al.	
2015/0208135	A1	7/2015	Sirpal et al.	

OTHER PUBLICATIONS

International Preliminary Report on Patentability for International (PCT) Patent Application No. PCT/US13/55589, mailed Feb. 26, 2015 8 pages.

Official Action for U.S. Appl. No. 13/970,388, mailed Sep. 4, 2014 14 pages.

Official Action for U.S. Appl. No. 13/970,388, mailed Jan. 22, 2015 12 pages.

Official Action for U.S. Appl. No. 13/970,388, mailed Jul. 8, 2015 12 pages.

Official Action for U.S. Appl. No. 13/970,388, mailed Mar. 3, 2016 13 pages.

Official Action for U.S. Appl. No. 13/970,398, mailed Sep. 2, 2014 14 pages.

Notice of Allowance for U.S. Appl. No. 13/970,398, mailed Feb. 2, 2015 14 pages.

Official Action for U.S. Appl. No. 13/970,409, mailed Jul. 21, 2014 21 pages.

Official Action for U.S. Appl. No. 13/970,409, mailed Feb. 11, 2015 25 pages.

Official Action for U.S. Appl. No. 13/970,409, mailed Jun. 17, 2015 26 pages.

Official Action for U.S. Appl. No. 13/970,409, mailed Apr. 8, 2016 27 pages.

Official Action for U.S. Appl. No. 13/970,420, mailed Oct. 9, 2014 15 pages.

Official Action for U.S. Appl. No. 13/970,420, mailed Feb. 10, 2015 13 pages.

Official Action for U.S. Appl. No. 13/970,420, mailed Aug. 6, 2015 13 pages.

Notice of Allowance for U.S. Appl. No. 13/970,420, mailed Mar. 17, 2016 8 pages.

Official Action for U.S. Appl. No. 13/970,427, mailed Sep. 30, 2014 24 pages.

Official Action for U.S. Appl. No. 13/970,427, mailed May 8, 2015 26 pages.

Official Action for U.S. Appl. No. 13/970,442, mailed Jun. 4, 2014 10 pages.

Official Action for U.S. Appl. No. 13/970,442, mailed Oct. 7, 2014 10 pages.

(56) **References Cited**

OTHER PUBLICATIONS

Official Action for U.S. Appl. No. 13/970,442, mailed Feb. 26, 2015 10 pages.
Notice of Allowance for U.S. Appl. No. 13/970,442, mailed Jul. 2, 2015 8 pages.
Official Action for U.S. Appl. No. 13/970,450 mailed Jul. 9, 2014 17 pages.
Official Action for U.S. Appl. No. 13/970,450, mailed Nov. 19, 2014 12 pages.
Notice of Allowance for U.S. Appl. No. 13/970,450, mailed May 19, 2015 14 pages.

* cited by examiner

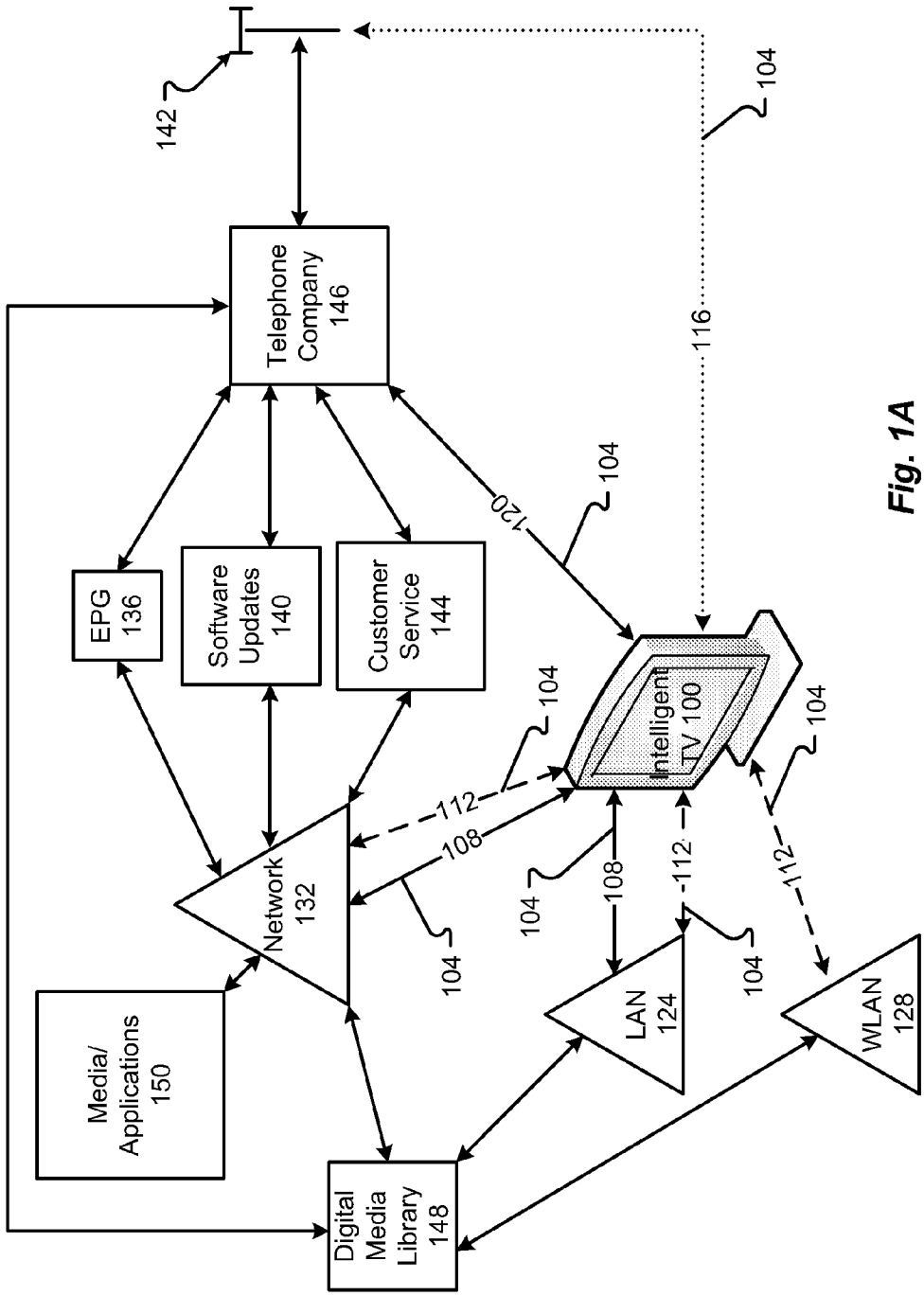
142
Telephone Company 146
104
116
120
104
EPG 136
Software Updates 140
Customer Service 144
104
Intelligent TV 100
104
112
108
Network 132
104
104
108
112
112
104
LAN 124
104
WLAN 128
Media/ Applications 150
Digital Media Library 148

Fig. 1A

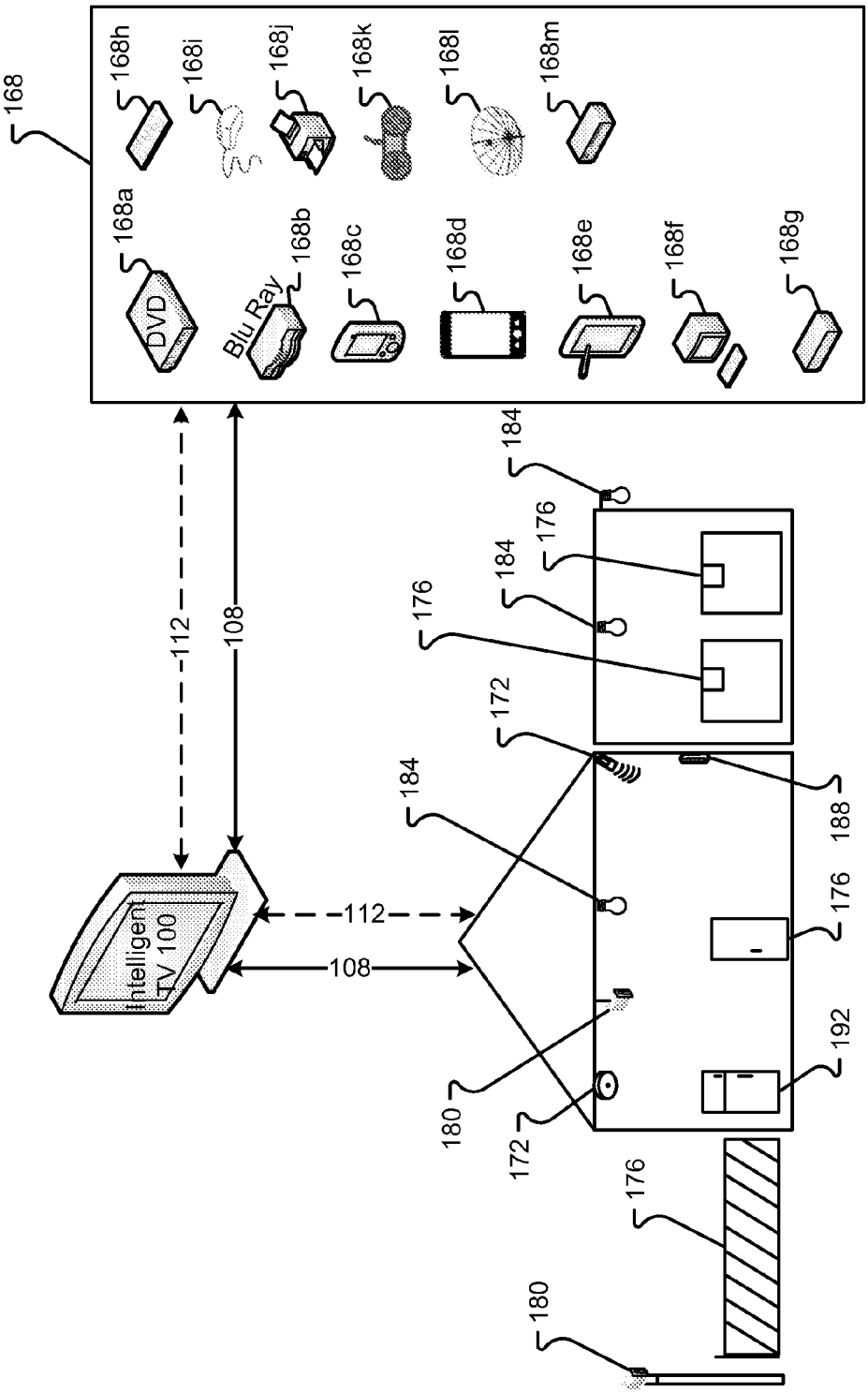
168
168a
DVD
168b
Blu Ray
168c
168d
168e
168f
168g
168h
168i
168j
168k
168l
168m
112
108
Intelligent TV 100
112
108
184
176
184
176
172
184
188
176
192
180
172
176
180

Fig. 1B

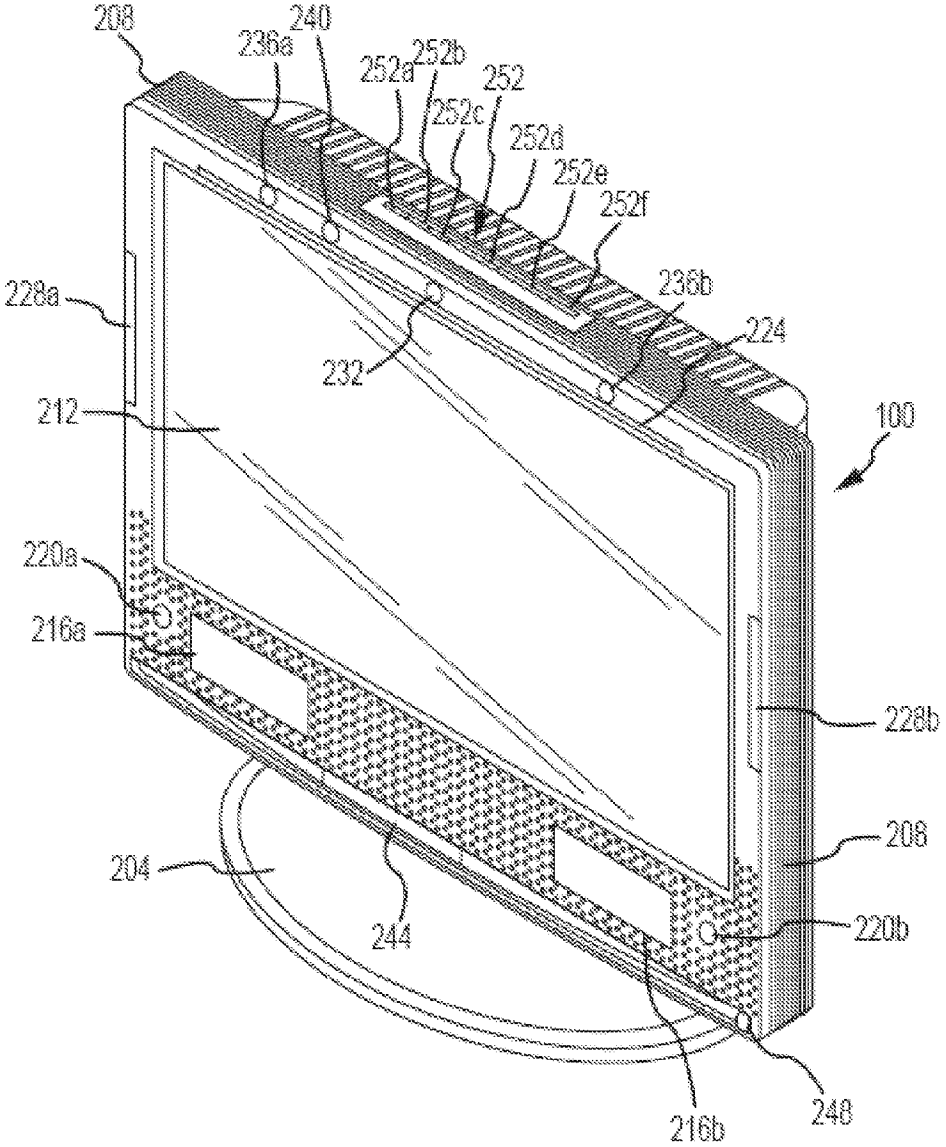
208
240
236a
252a
252b
252
252c
252d
252e
252f
228a
236b
224
232
212
100
220a
216a
228b
208
204
244
220b
216b
240

Fig. 2A

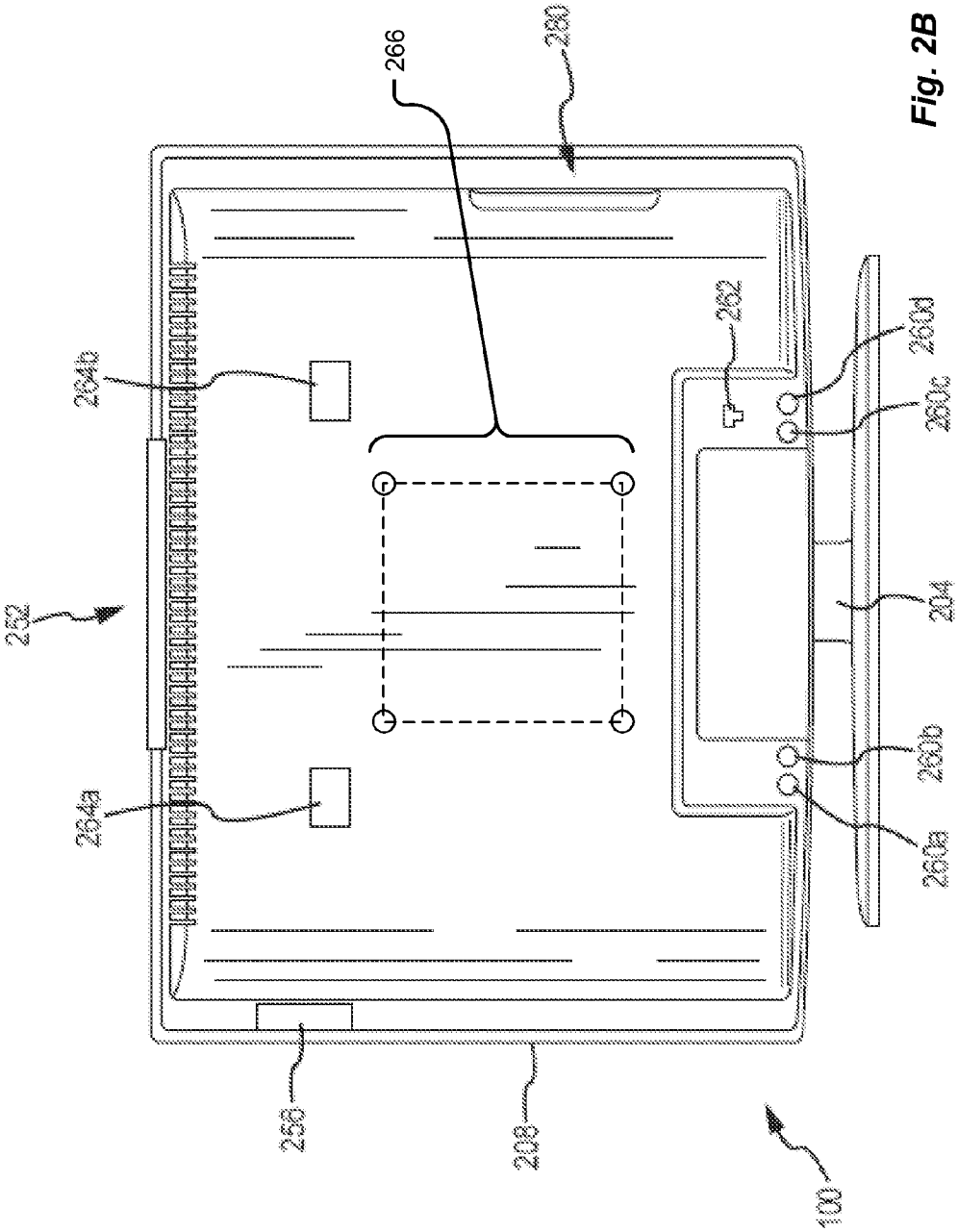

Fig. 2B

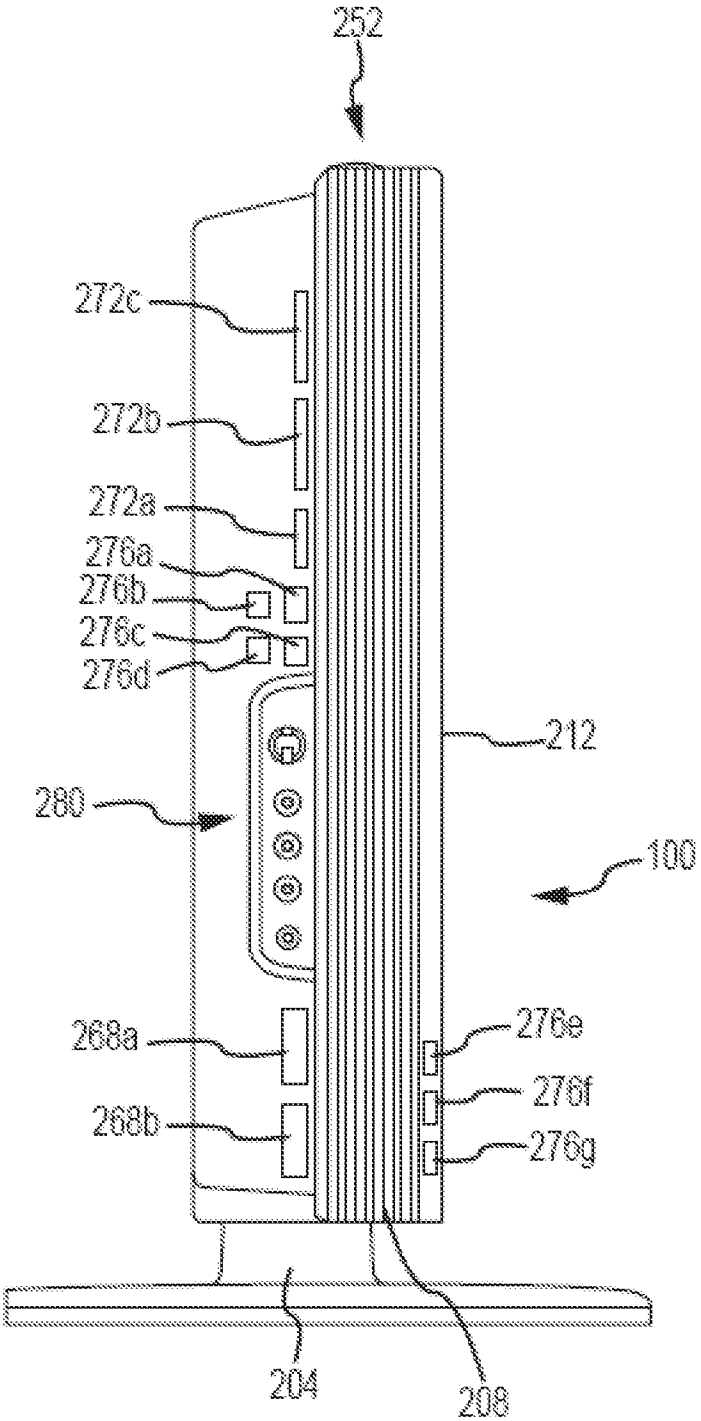
252
272c
272b
272a
276a
276b
276c
276d
212
280
100
268a
268b
276e
276f
276g
204
208

Fig. 2C

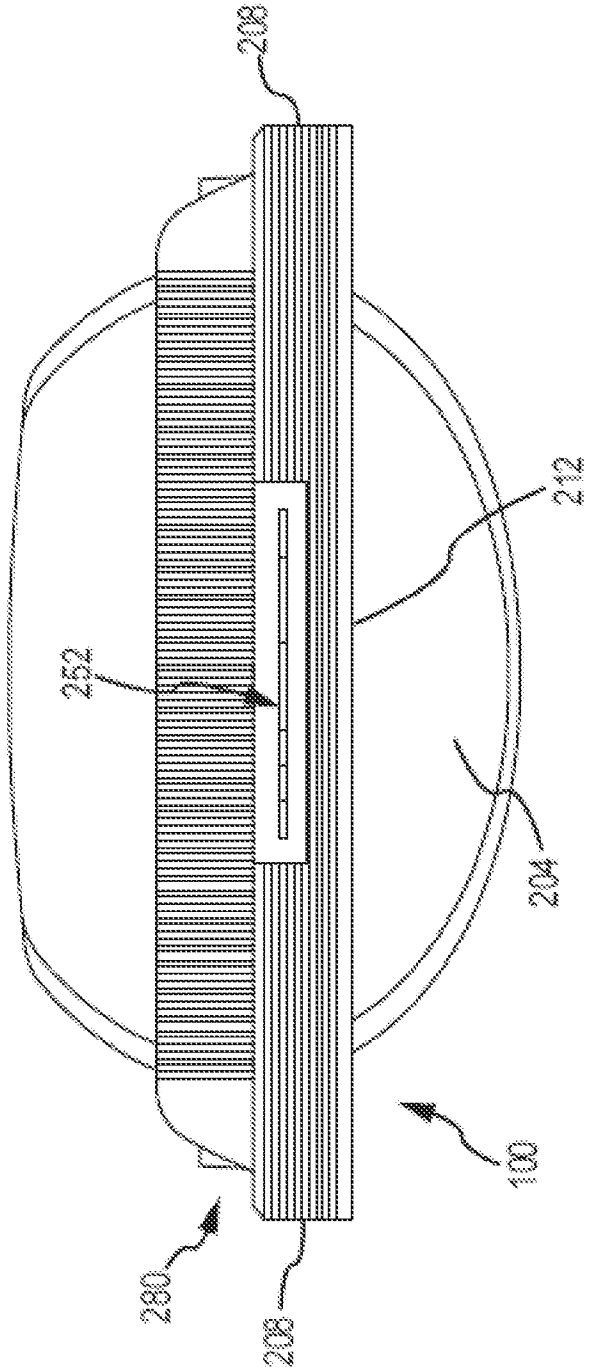

Fig. 2D

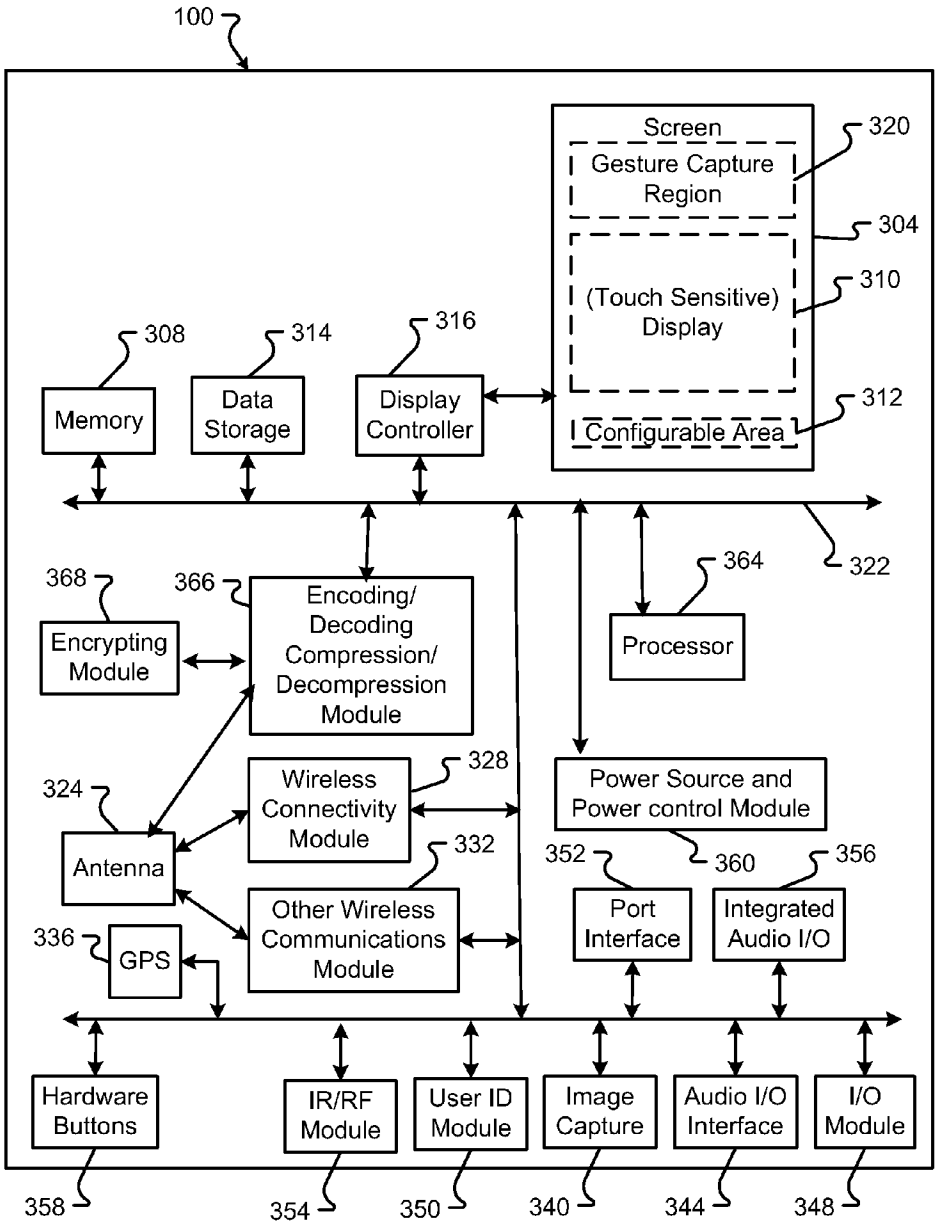
100
Screen
Gesture Capture Region
320
304
(Touch Sensitive) Display
310
312
Configurable Area
308
Memory
314
Data Storage
316
Display Controller
322
364
Processor
368
Encrypting Module
366
Encoding/ Decoding Compression/ Decompression Module
324
Antenna
Wireless Connectivity Module
328
Other Wireless Communications Module
332
Power Source and Power control Module
360
352
Port Interface
356
Integrated Audio I/O
336
GPS
Hardware Buttons
IR/RF Module
User ID Module
Image Capture
Audio I/O Interface
I/O Module
358
354
350
340
344
348

FIG. 3

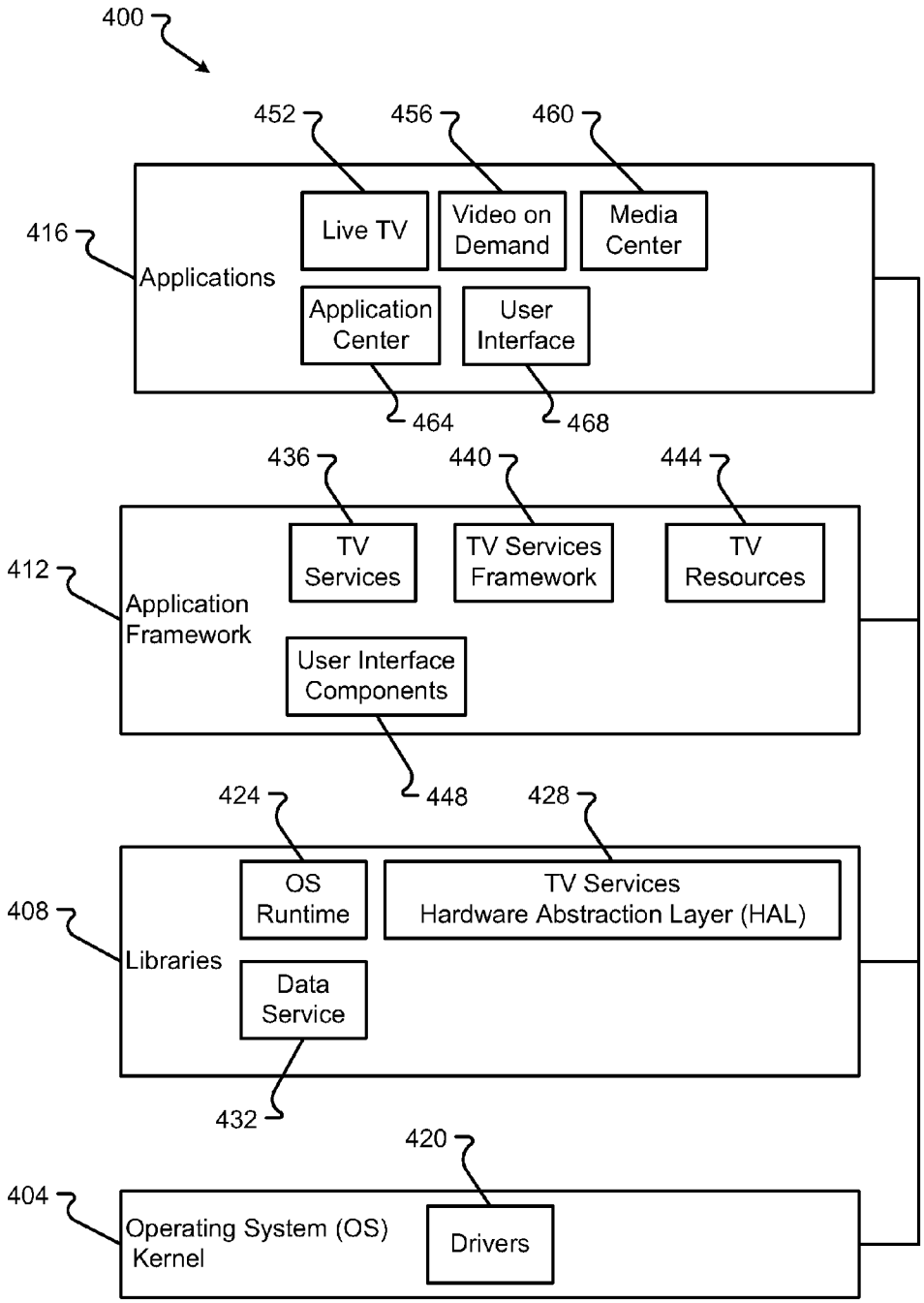
400
452
456
460
416
Applications
Live TV
Video on Demand
Media Center
Application Center
User Interface
464
468
436
440
444
412
Application Framework
TV Services
TV Services Framework
TV Resources
User Interface Components
448
424
428
408
Libraries
OS Runtime
TV Services Hardware Abstraction Layer (HAL)
Data Service
432
420
404
Operating System (OS) Kernel
Drivers

FIG. 4

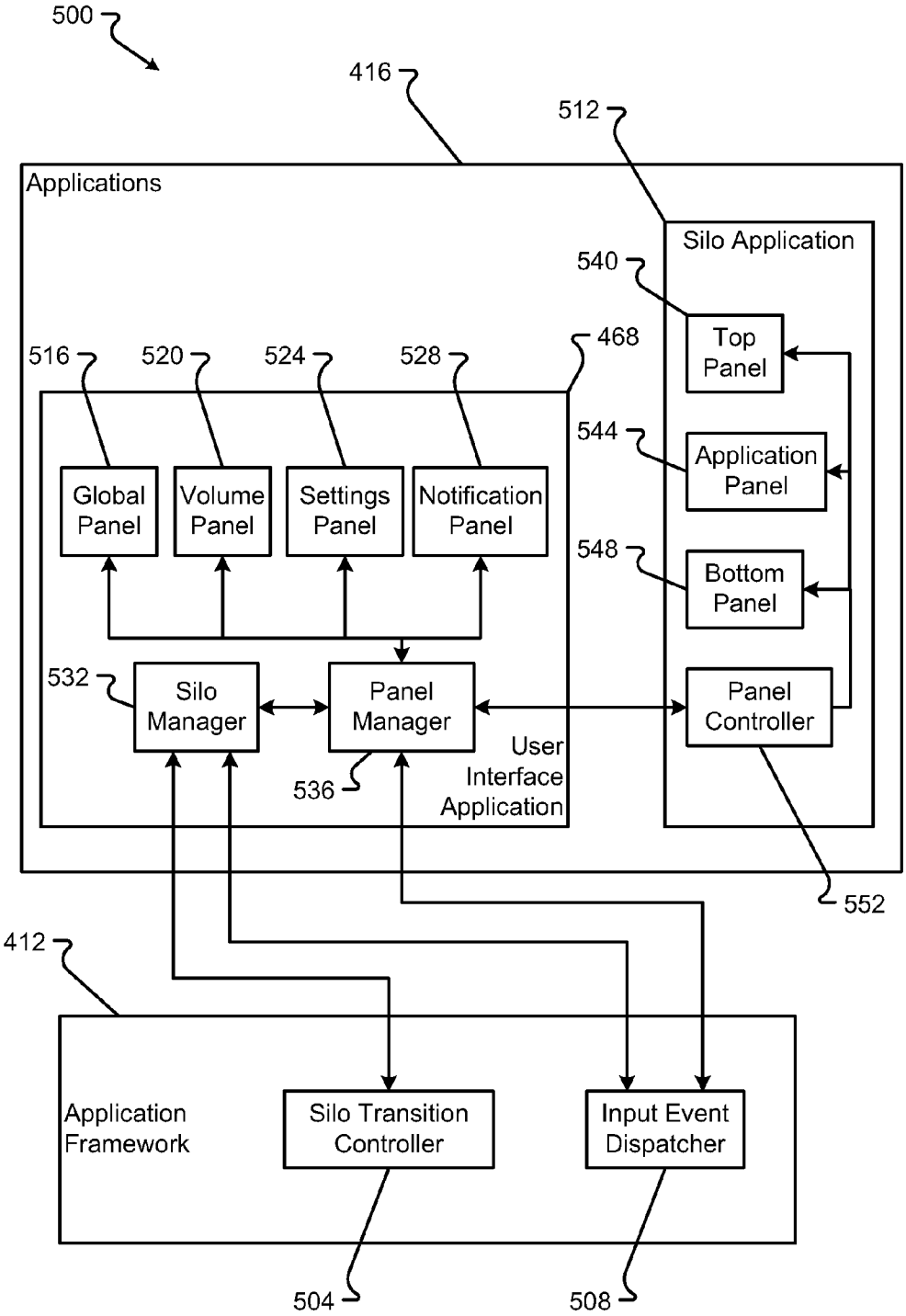
500
416
512
Applications
Silo Application
540
Top Panel
468
516
520
524
528
544
Application Panel
Global Panel
Volume Panel
Settings Panel
Notification Panel
548
Bottom Panel
532
Silo Manager
Panel Manager
Panel Controller
User Interface Application
536
552
412
Application Framework
Silo Transition Controller
Input Event Dispatcher
504
508

FIG. 5

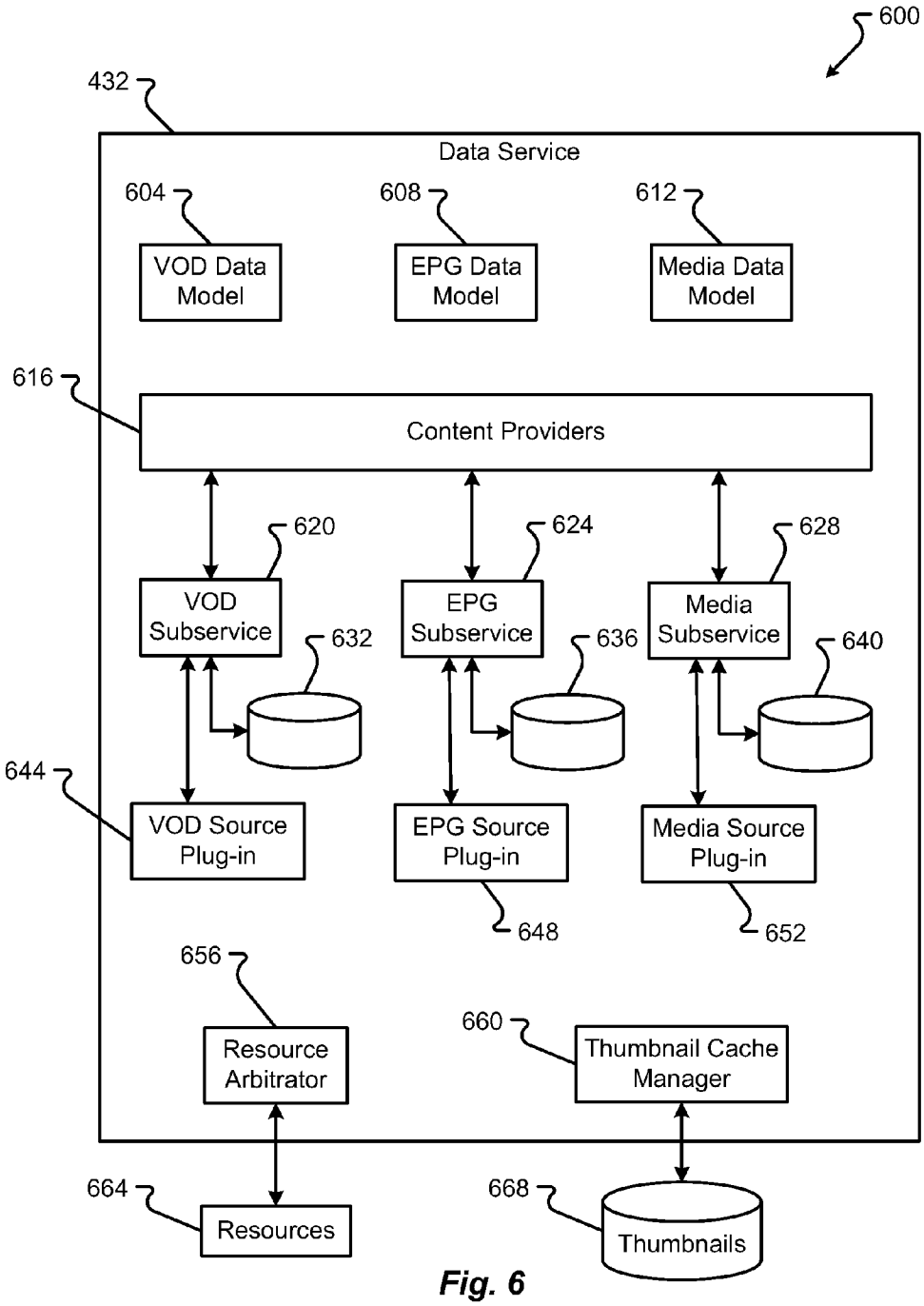
600
432
Data Service
604
VOD Data Model
608
EPG Data Model
612
Media Data Model
616
Content Providers
620
VOD Subservice
624
EPG Subservice
628
Media Subservice
632
636
640
644
VOD Source Plug-in
EPG Source Plug-in
648
Media Source Plug-in
652
656
Resource Arbitrator
660
Thumbnail Cache Manager
664
Resources
668
Thumbnails

Fig. 6

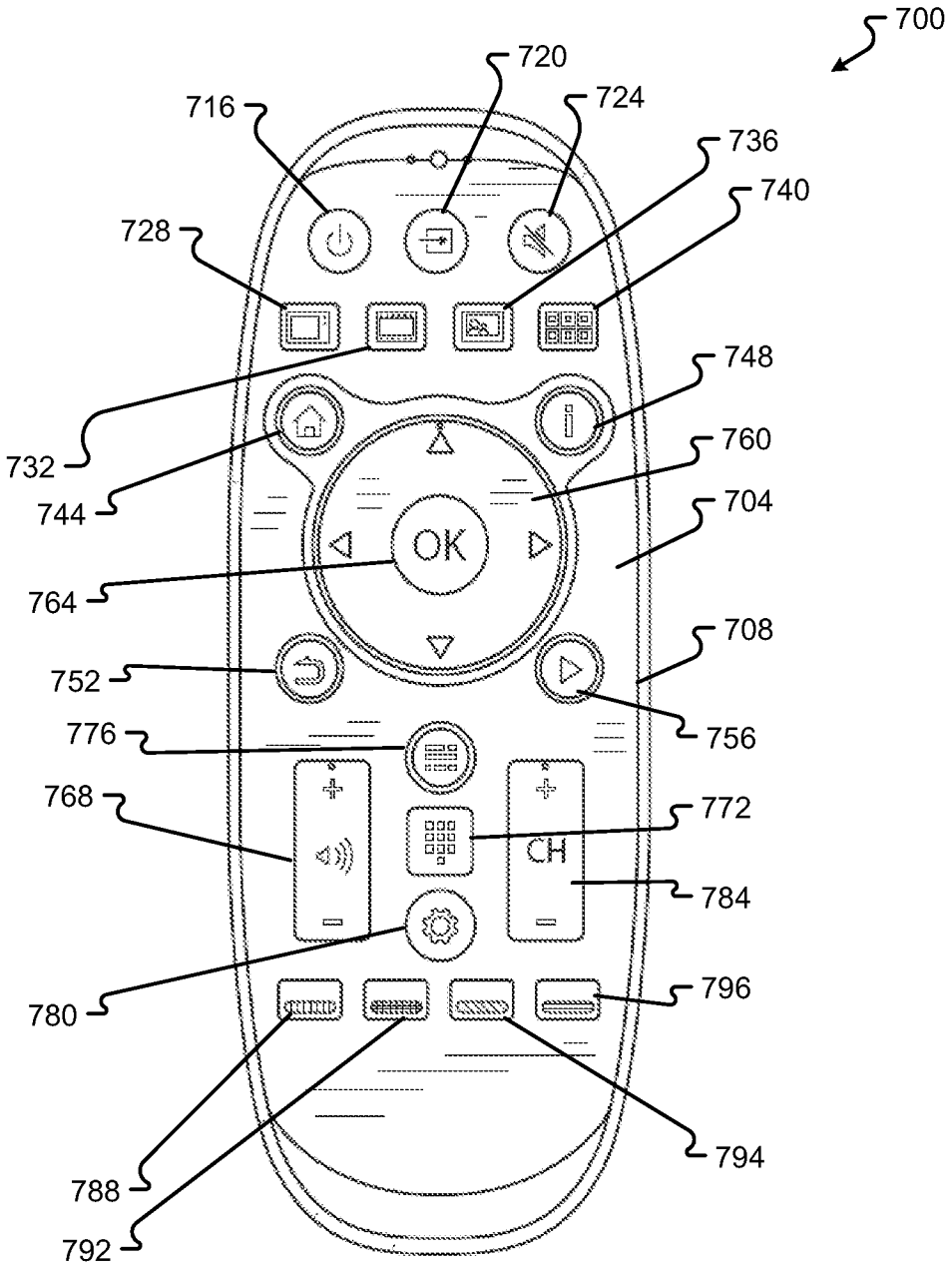
700
720
724
716
736
740
728
748
732
760
744
704
OK
764
708
752
756
776
768
772
CH
784
780
796
794
788
792

Fig. 7

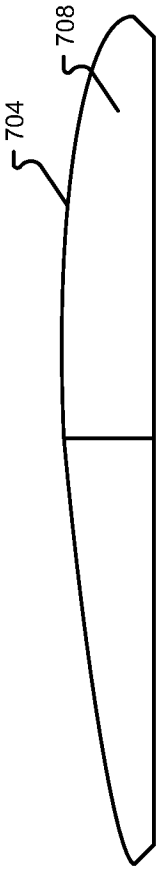

Fig. 8

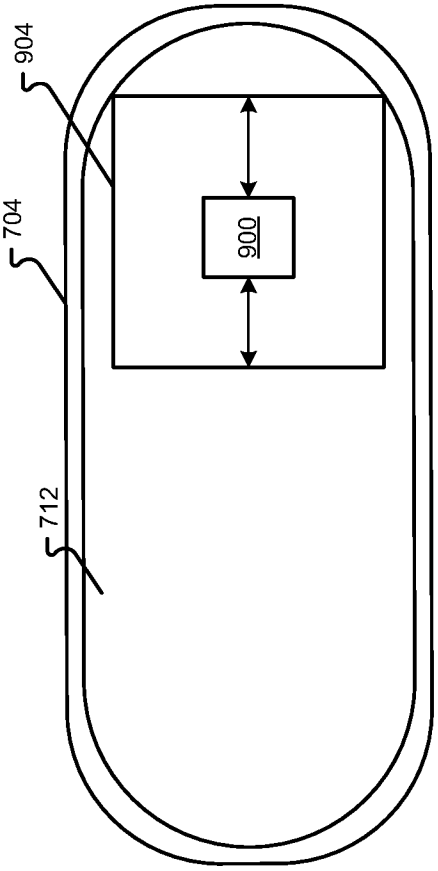

Fig. 9A

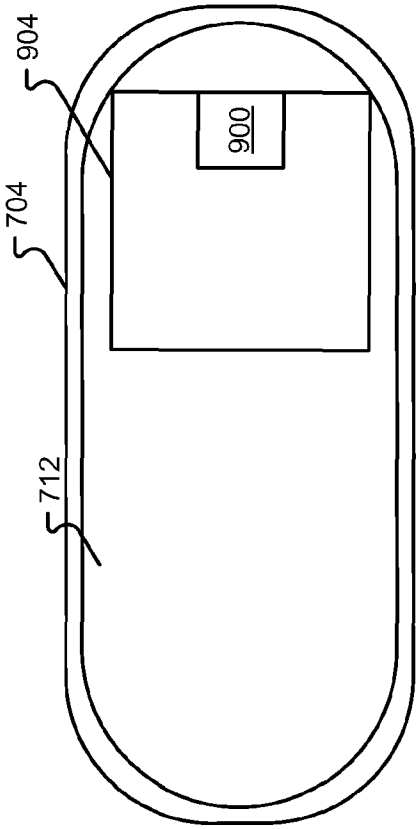

Fig. 9B

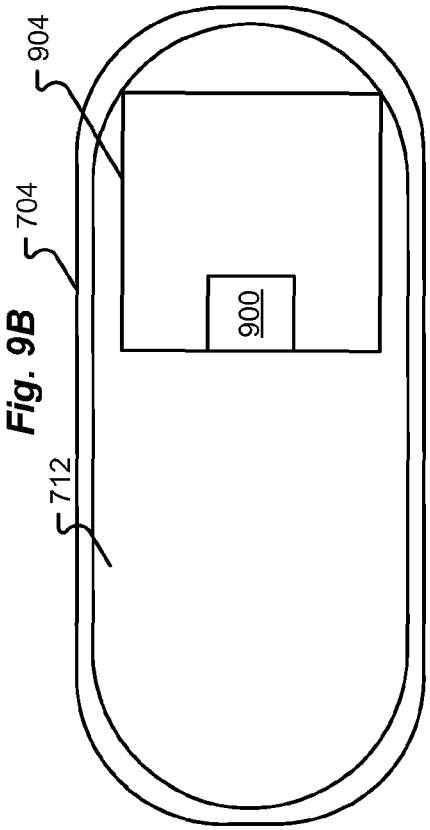

Fig. 9C

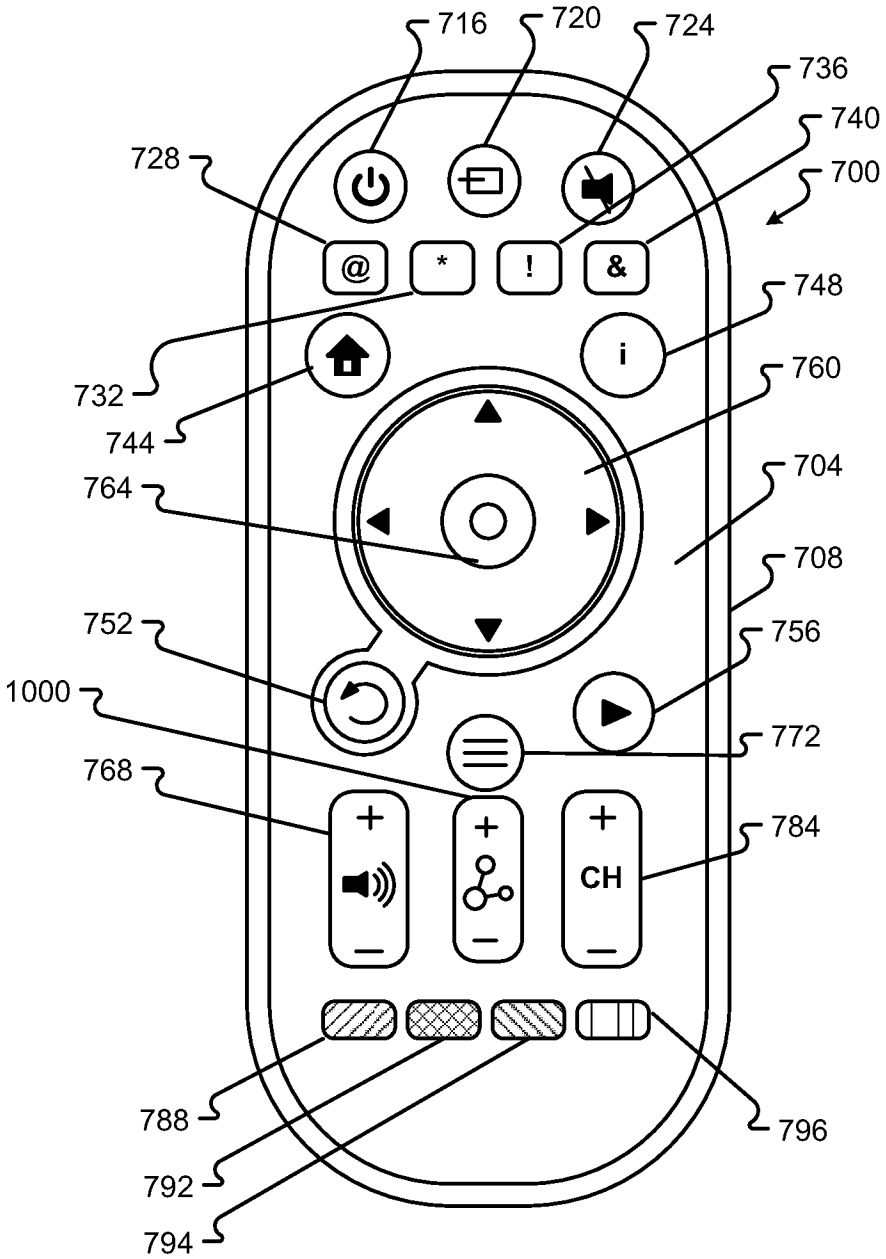
716
720
724
736
740
700
728
@
*
!
&
748
i
732
760
744
704
764
708
752
756
1000
772
768
784
CH
788
796
792
794

Fig. 10

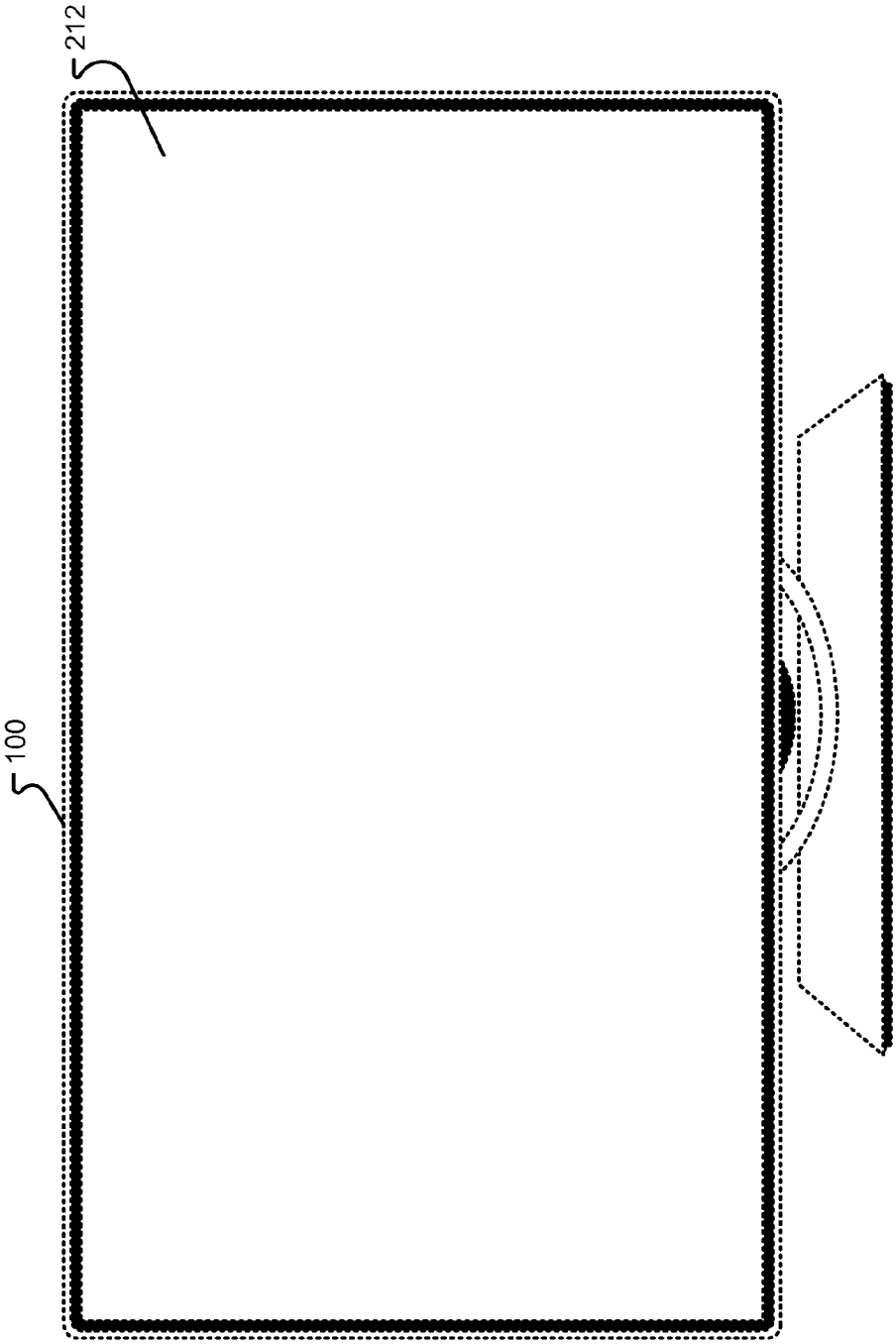

Fig. 11A

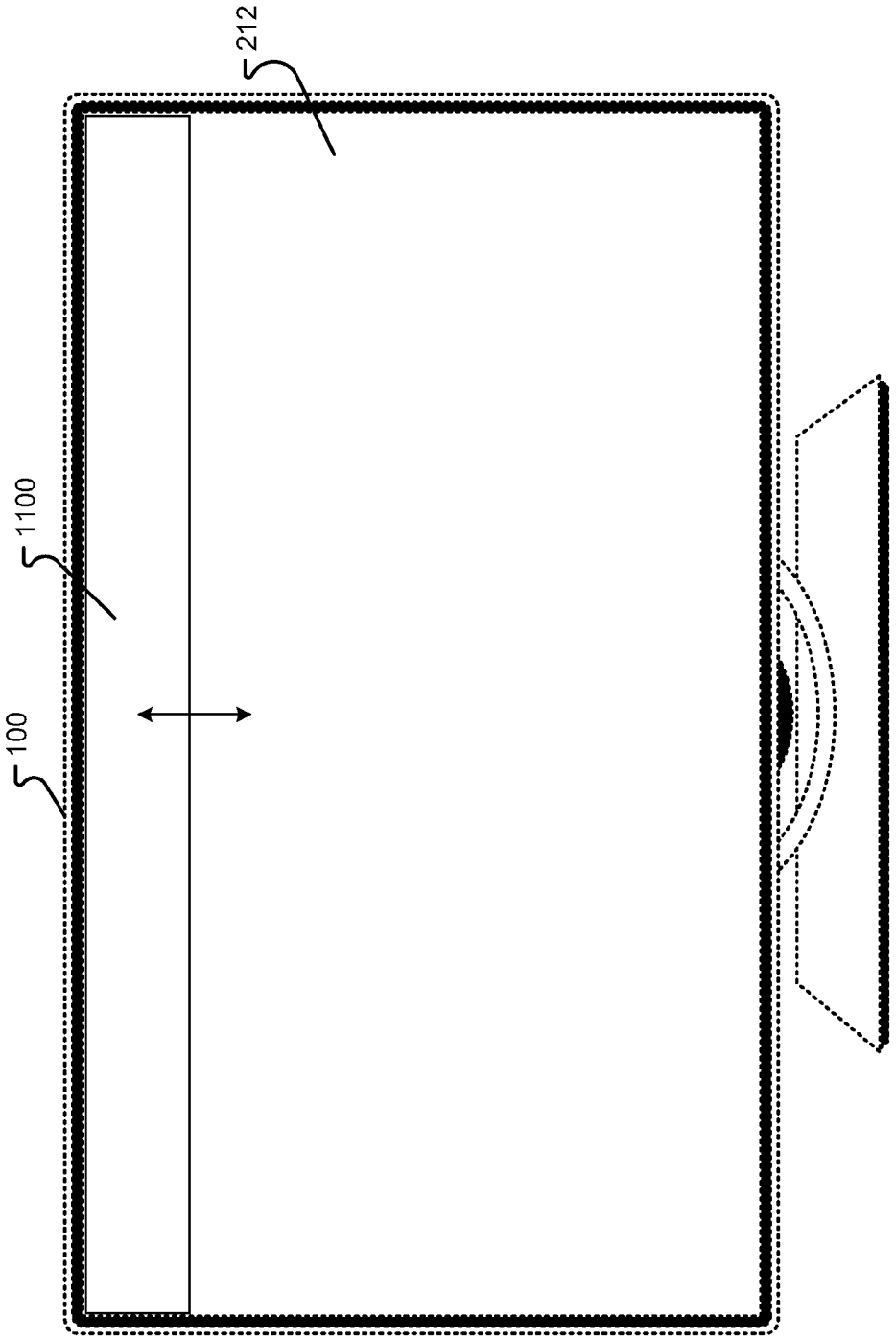

Fig. 11B

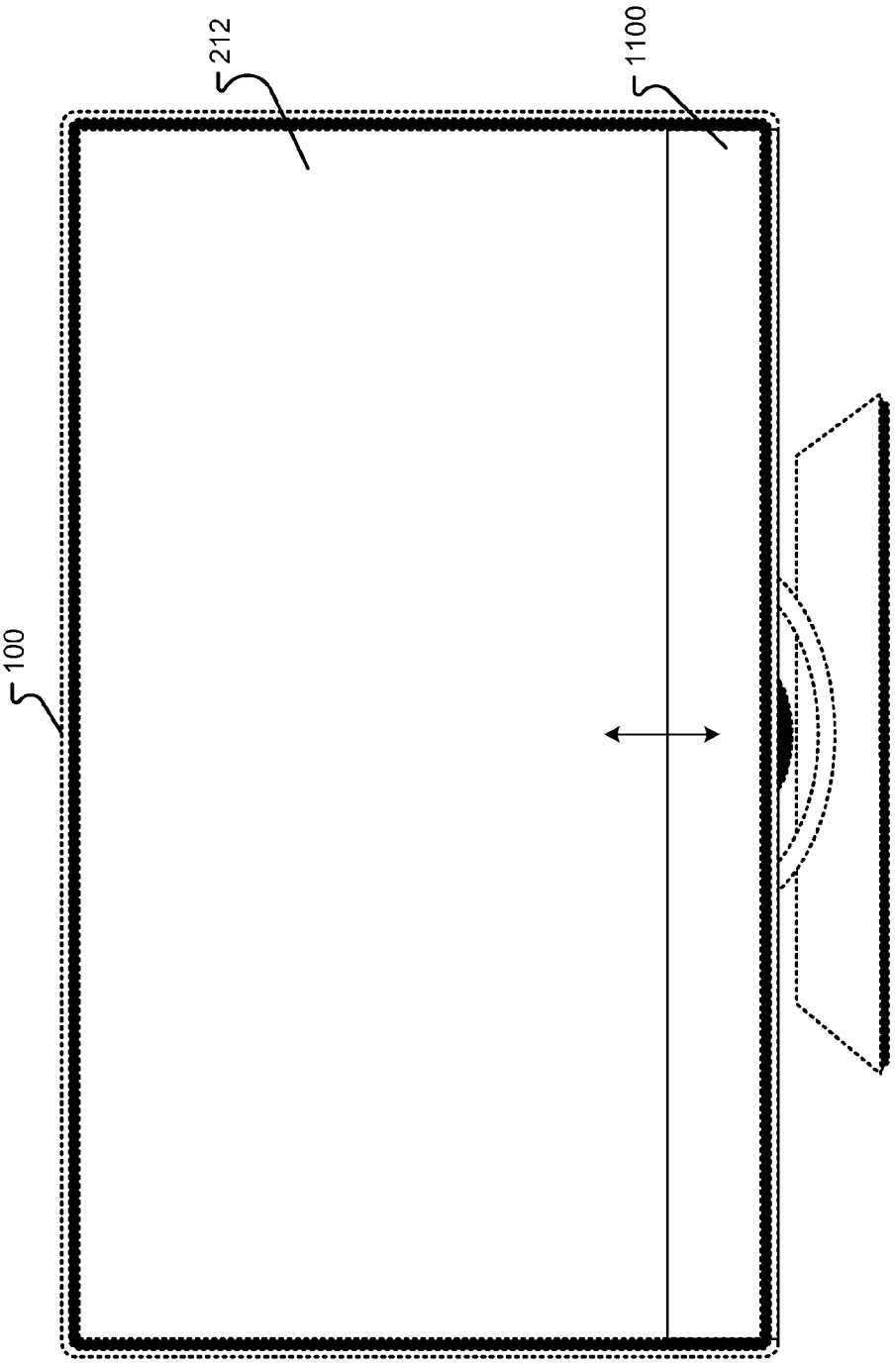

Fig. 11C

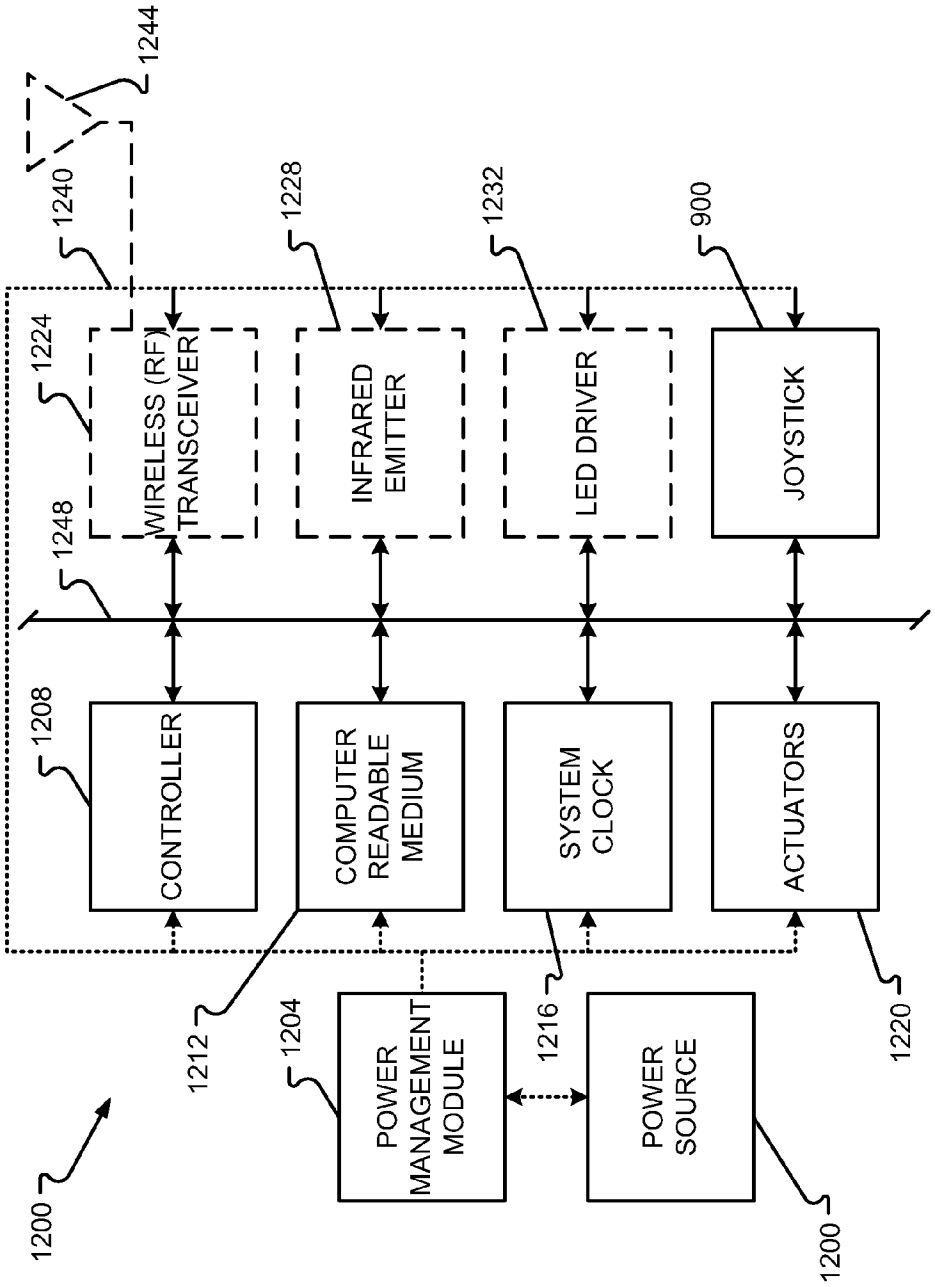
1244
1240
1224
1248
1208
WIRELESS (RF) TRANSCEIVER
CONTROLLER
1228
INFRARED EMITTER
COMPUTER READABLE MEDIUM
1232
LED DRIVER
SYSTEM CLOCK
900
JOYSTICK
ACTUATORS
1212
1204
POWER MANAGEMENT MODULE
1216
POWER SOURCE
1220
1200
1200

Fig. 12

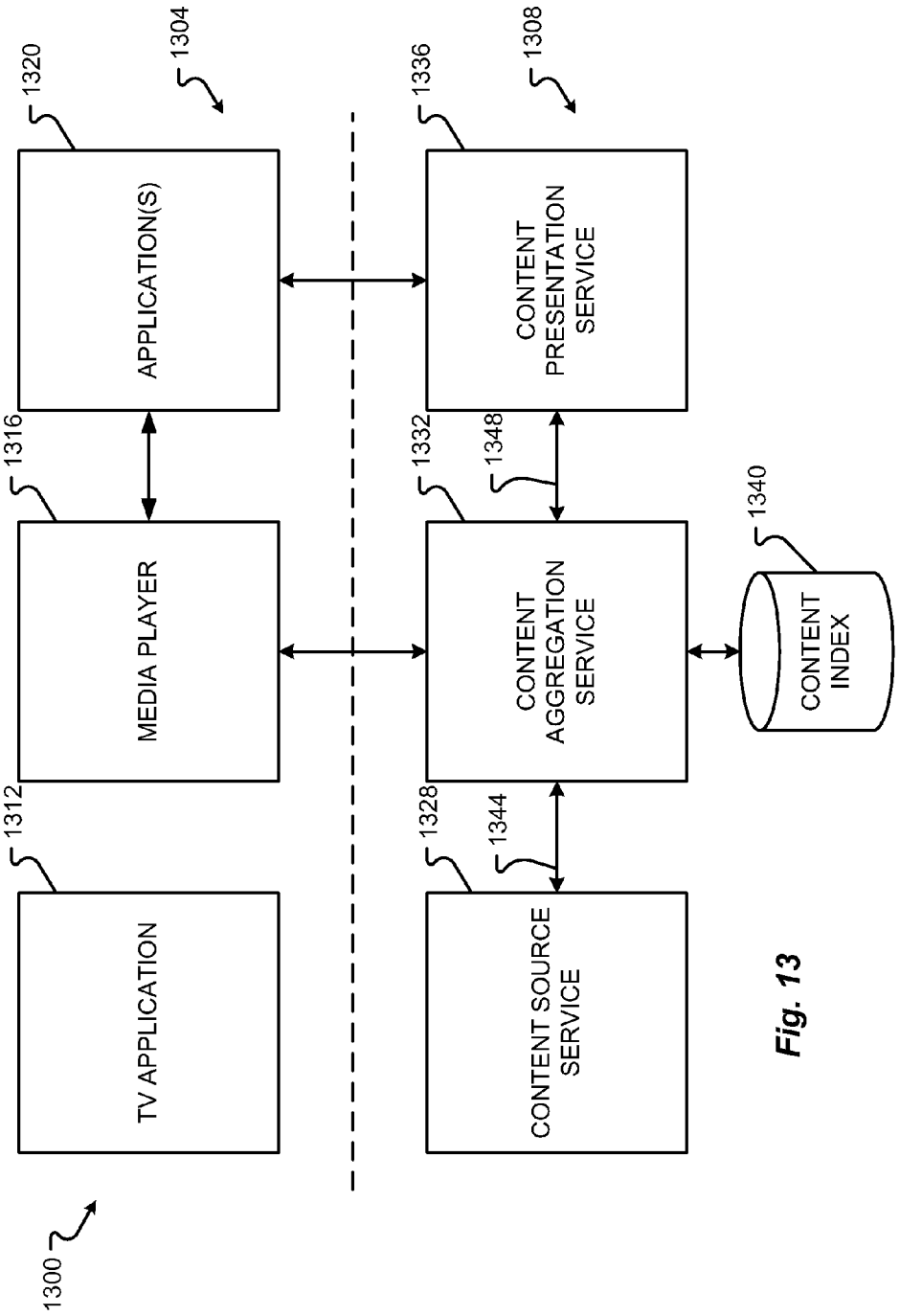
1300
1304
1308
1312
1316
1320
1328
1332
1336
1340
1344
1348
TV APPLICATION
MEDIA PLAYER
APPLICATION(S)
CONTENT SOURCE SERVICE
CONTENT AGGREGATION SERVICE
CONTENT PRESENTATION SERVICE
CONTENT INDEX

Fig. 13

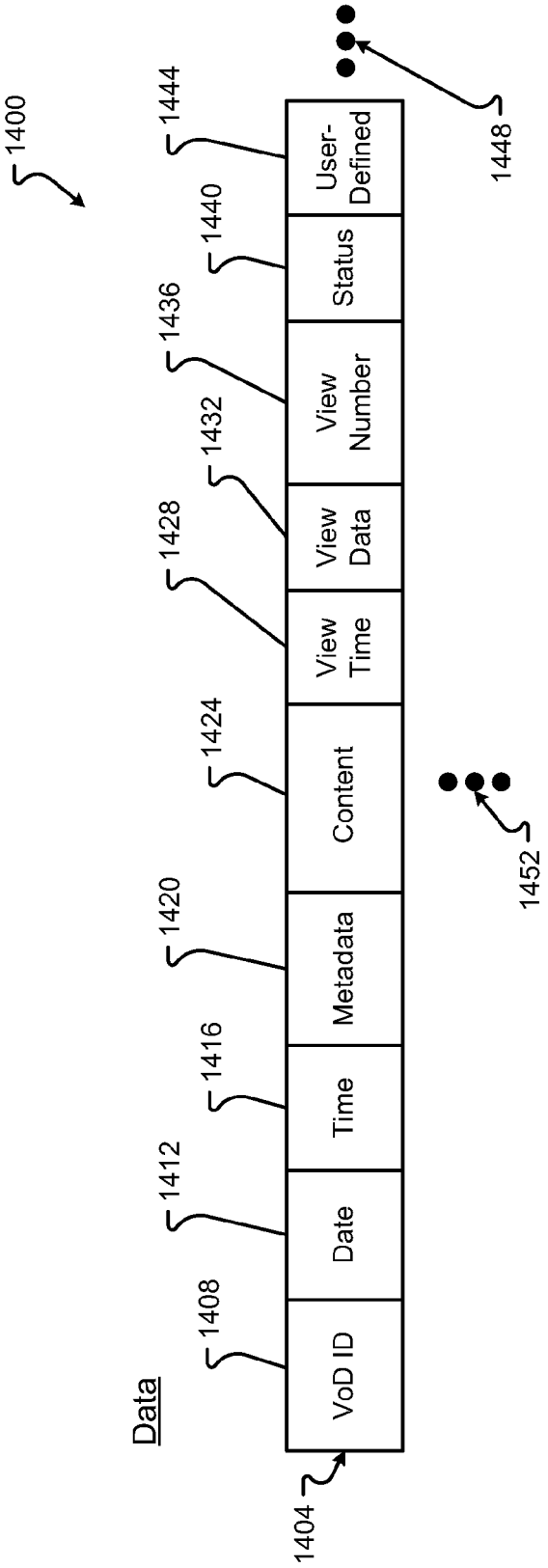
1400
Data
1404
VoD ID
1408
Date
1412
Time
1416
Metadata
1420
Content
1424
View Time
1428
View Data
1432
View Number
1436
Status
1440
User-Defined
1444
1448
1452

Fig. 14

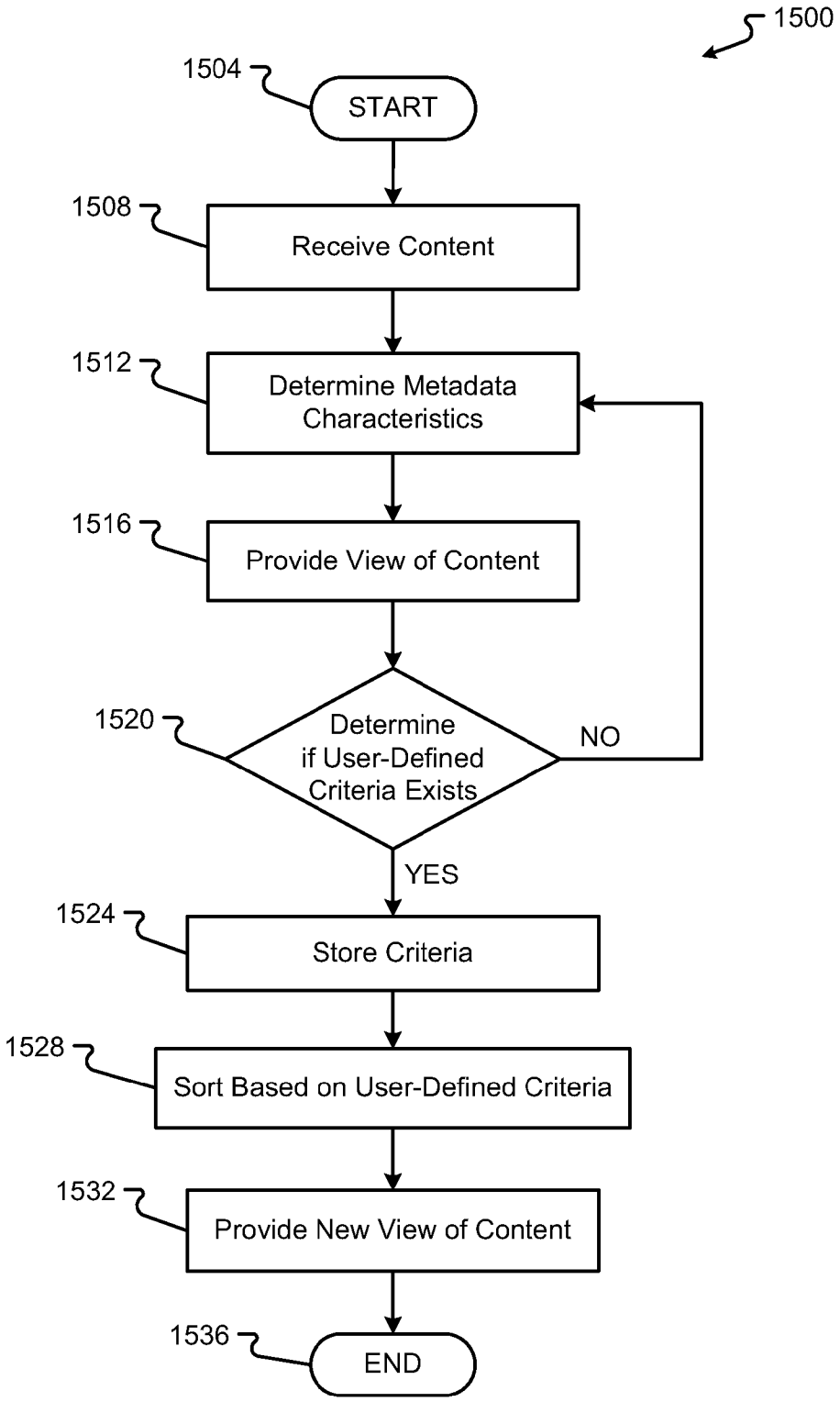
1500
1504
START
1508
Receive Content
1512
Determine Metadata Characteristics
1516
Provide View of Content
1520
Determine if User-Defined Criteria Exists
NO
YES
1524
Store Criteria
1528
Sort Based on User-Defined Criteria
1532
Provide New View of Content
1536
END

Fig. 15

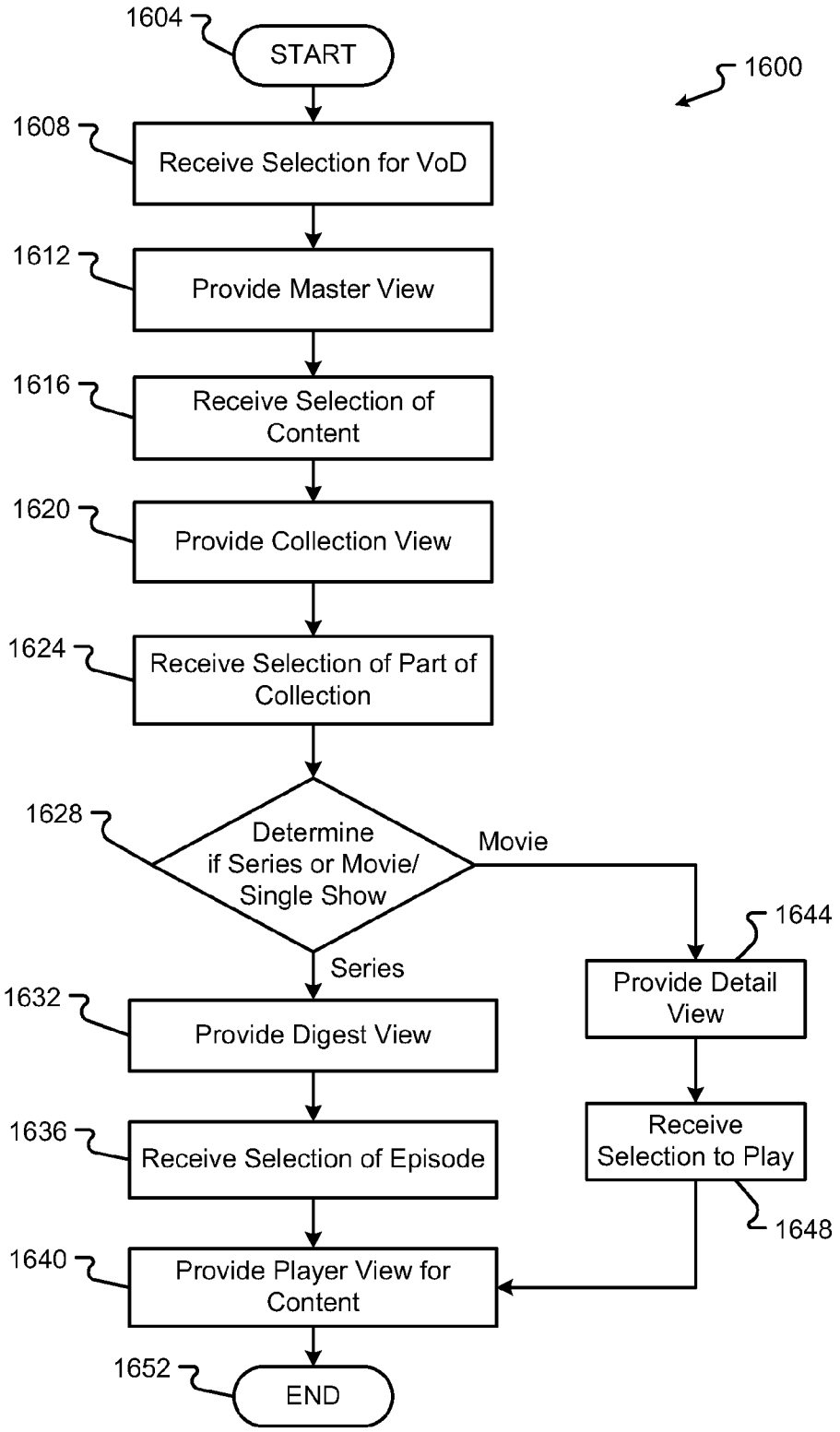
1604
START
1600
1608
Receive Selection for VoD
1612
Provide Master View
1616
Receive Selection of Content
1620
Provide Collection View
1624
Receive Selection of Part of Collection
1628
Determine if Series or Movie/ Single Show
Movie
Series
1644
Provide Detail View
1632
Provide Digest View
1636
Receive Selection of Episode
Receive Selection to Play
1648
1640
Provide Player View for Content
1652
END

Fig. 16

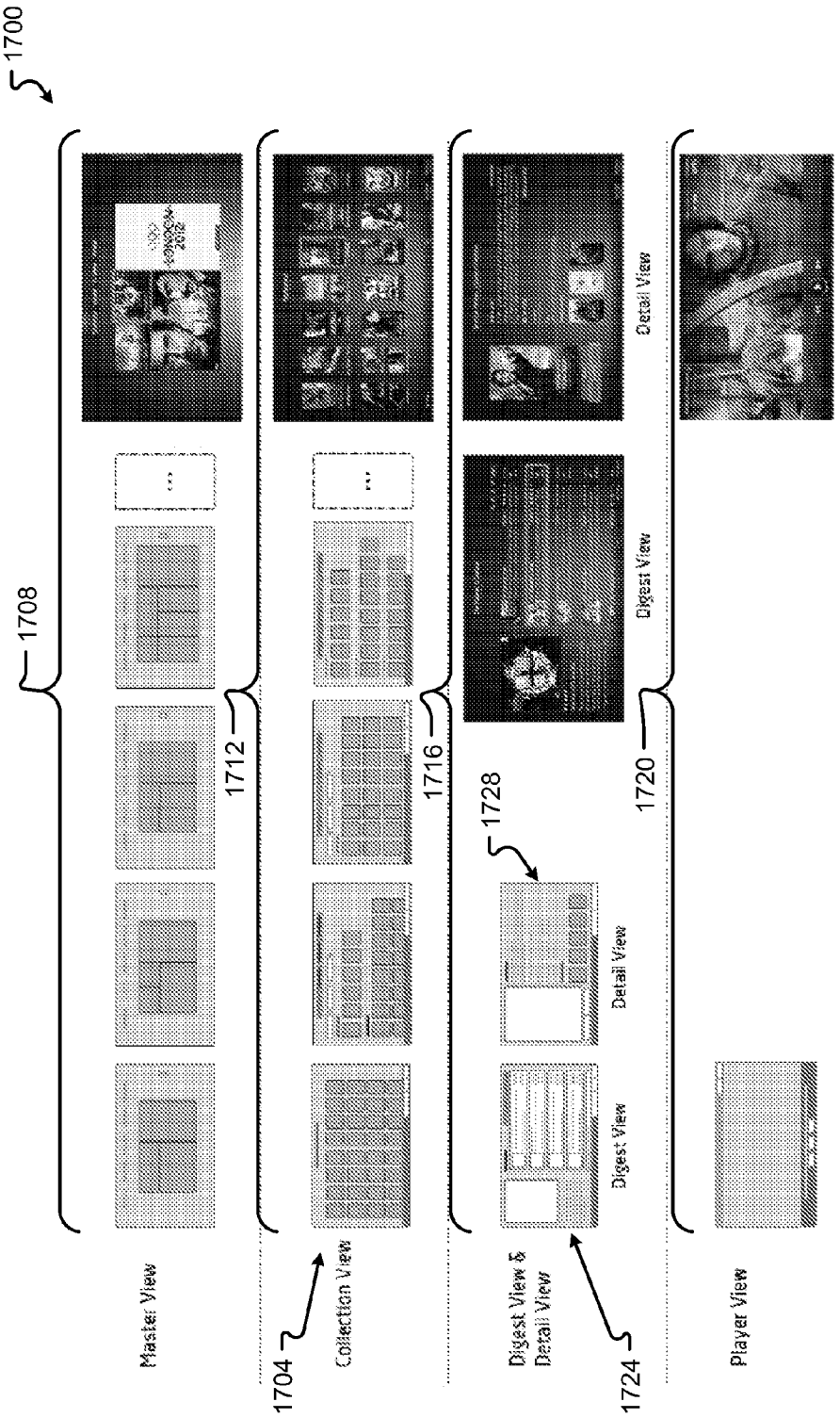
1700
1708
1712
1716
1720
1728
1704
1724
Master View
Collection View
Digest View & Detail View
Player View
Digest View
Detail View
Digest View
Detail View

Fig. 17

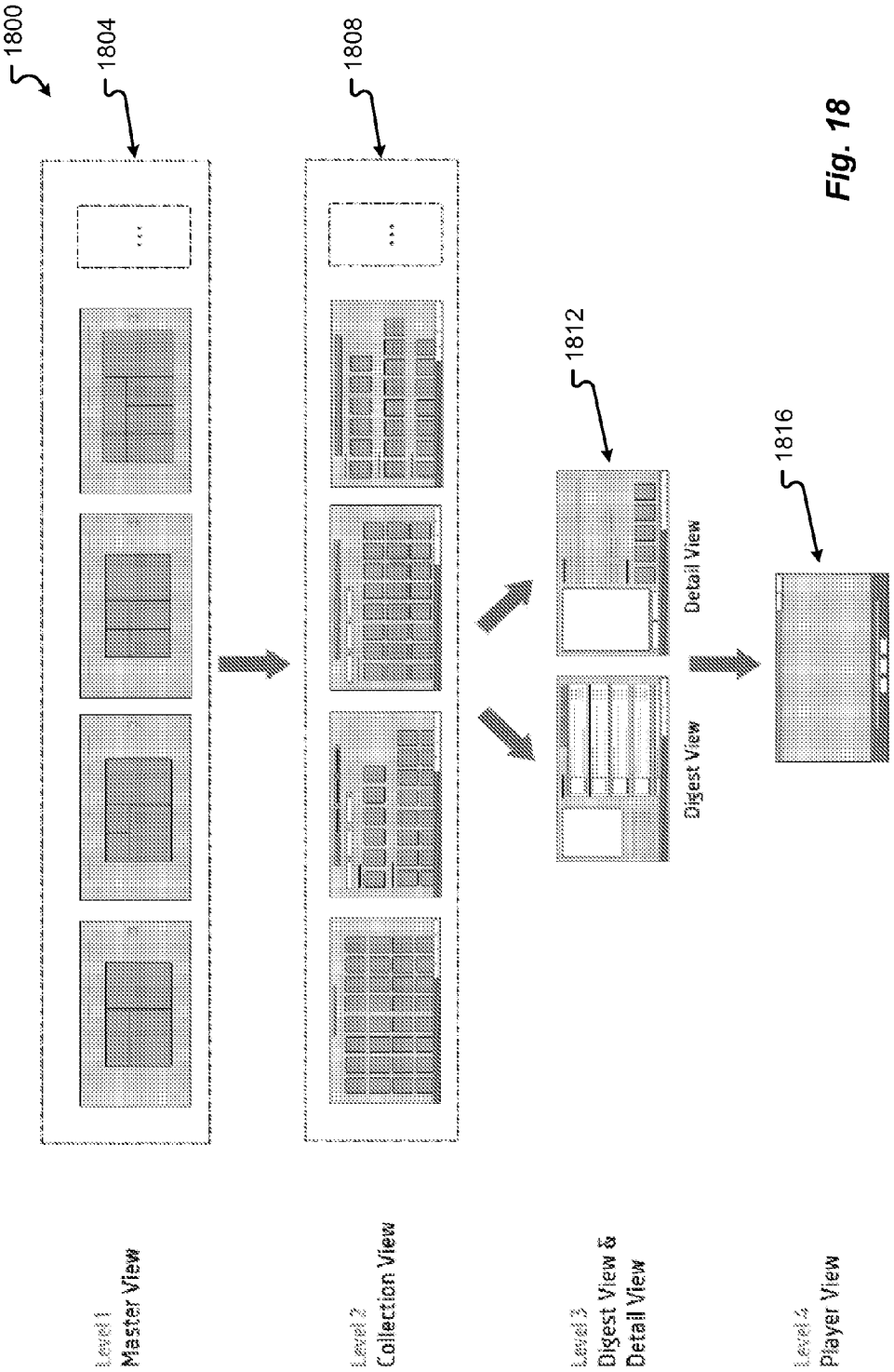
1800
1804
1808
1812
1816
Detail View
Digest View
Level 1
Master View
Level 2
Collection View
Level 3
Digest View &
Detail View
Level 4
Player View

Fig. 18

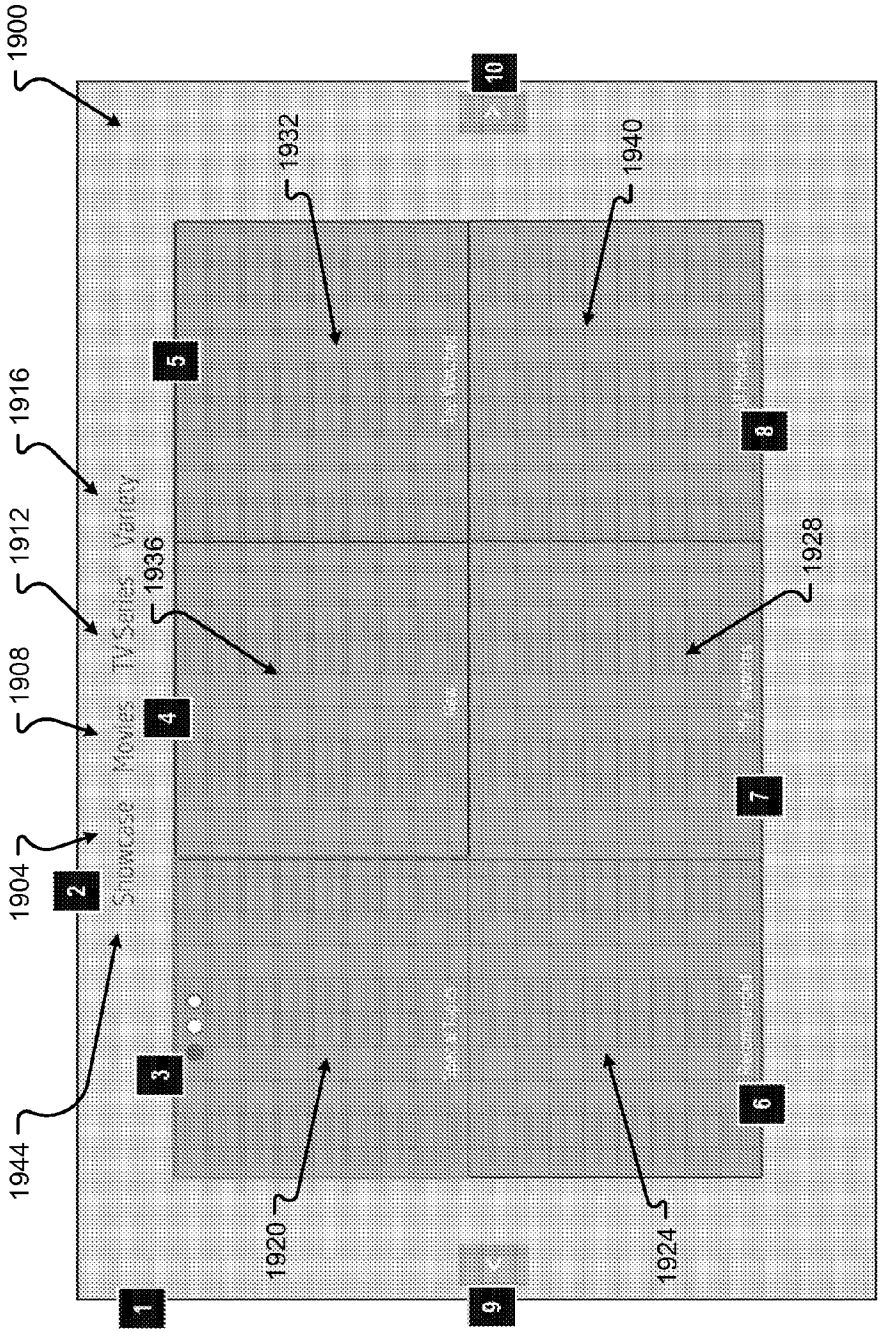
1900
1916
1912
1908
1904
1944
1920
1924
1932
1940
1936
1928
Showcase
Movies
TV Series
Variety
1
2
3
4
5
6
7
8
9
10

Fig. 19

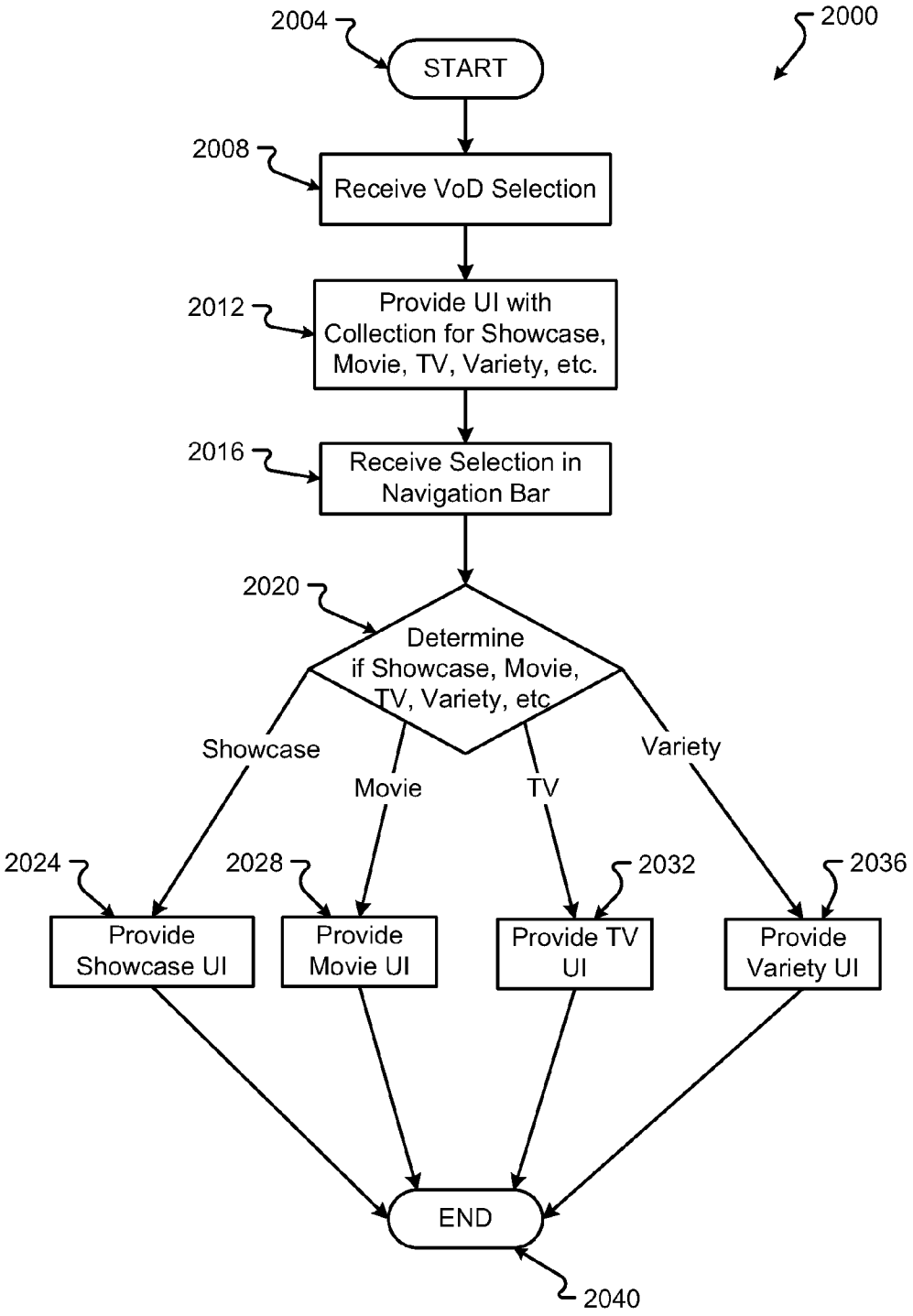
2000
2004
START
2008
Receive VoD Selection
2012
Provide UI with Collection for Showcase, Movie, TV, Variety, etc.
2016
Receive Selection in Navigation Bar
2020
Determine if Showcase, Movie, TV, Variety, etc
Showcase
Movie
TV
Variety
2024
Provide Showcase UI
2028
Provide Movie UI
2032
Provide TV UI
2036
Provide Variety UI
END
2040

Fig. 20

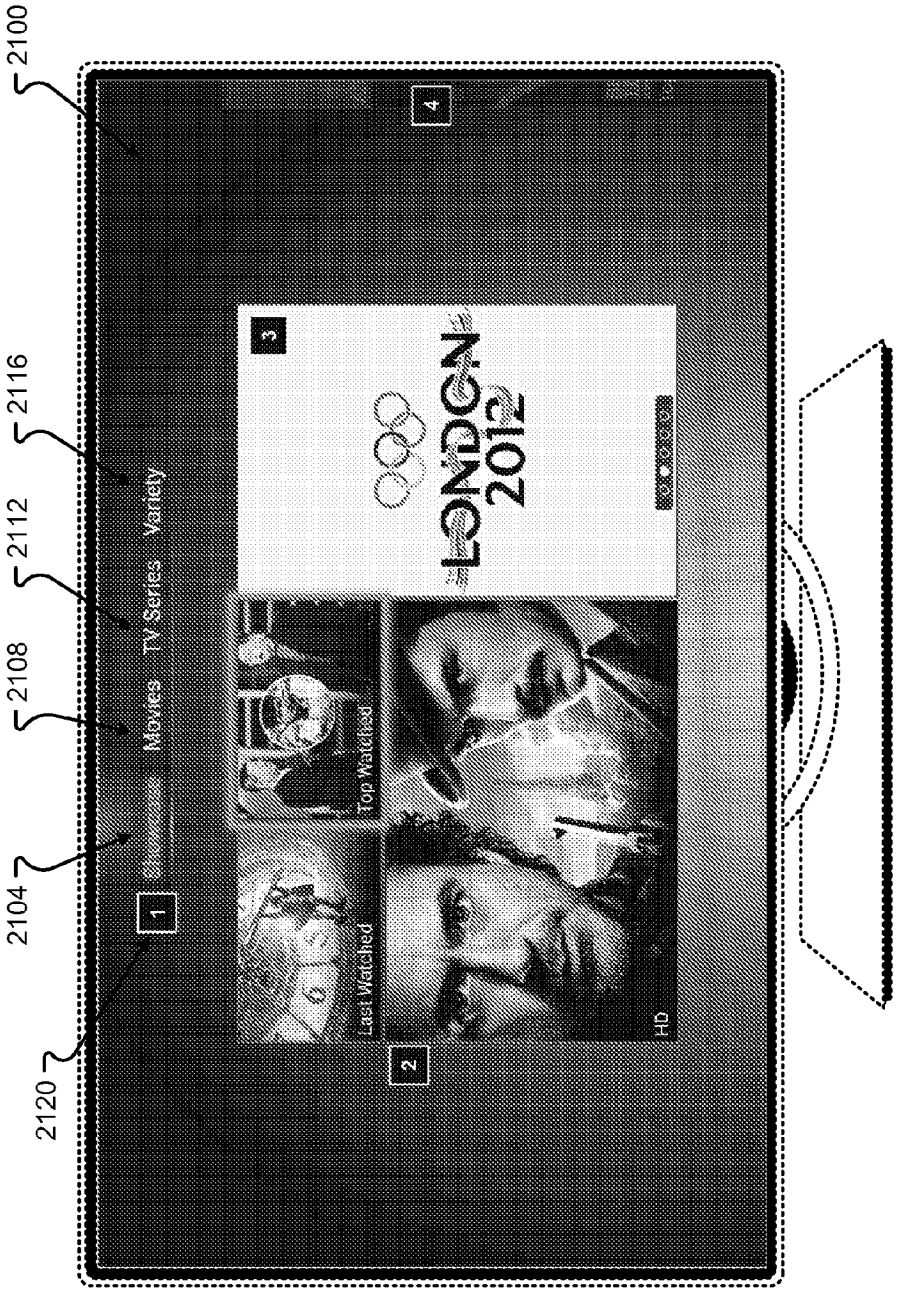
2100
2116
2112
2108
2104
2120
Movies
TV Series
Variety
1
Last Watched
Top Watched
2
3
LONDON
2012
HD
4

Fig. 21

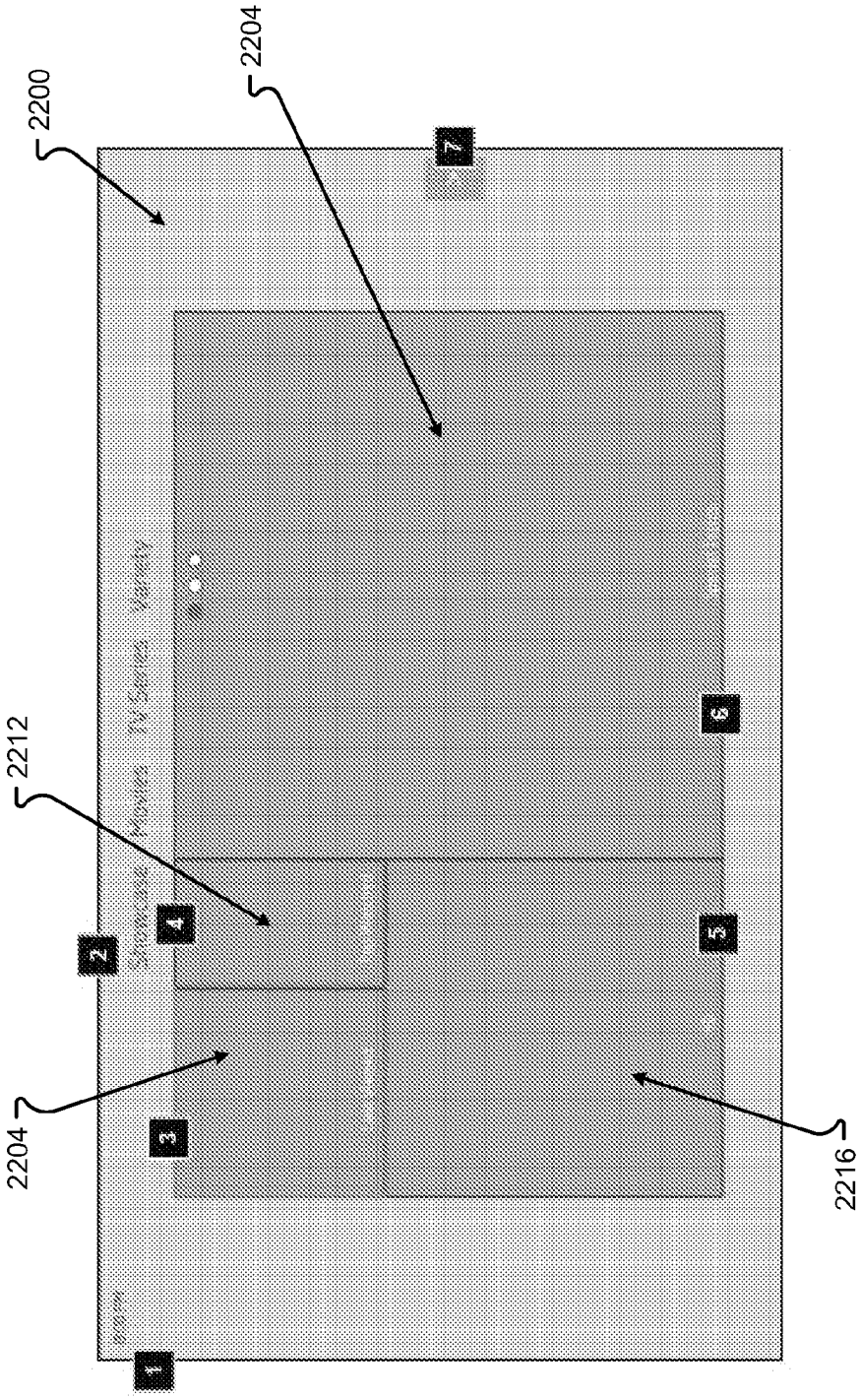

Fig. 22

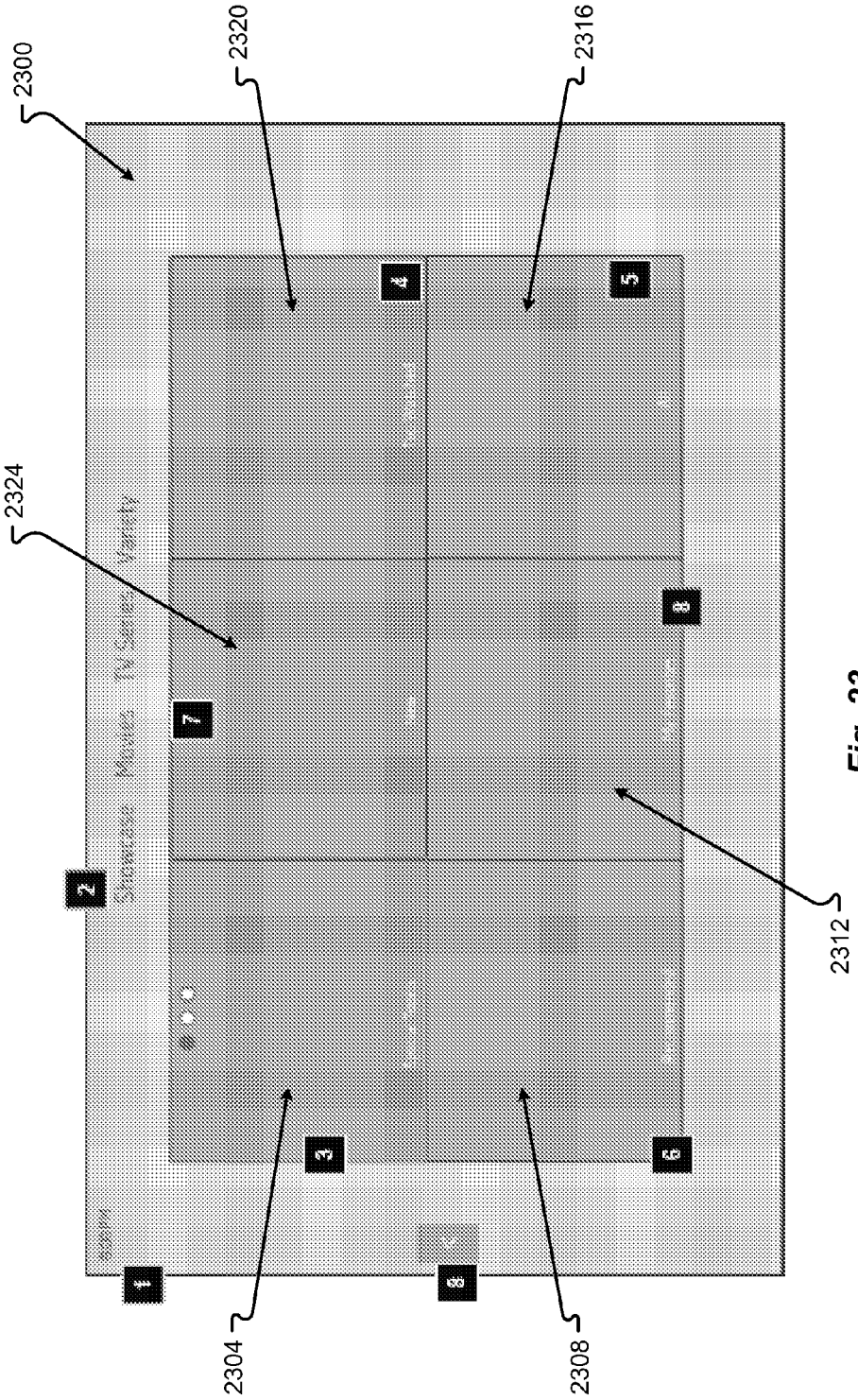

Fig. 23

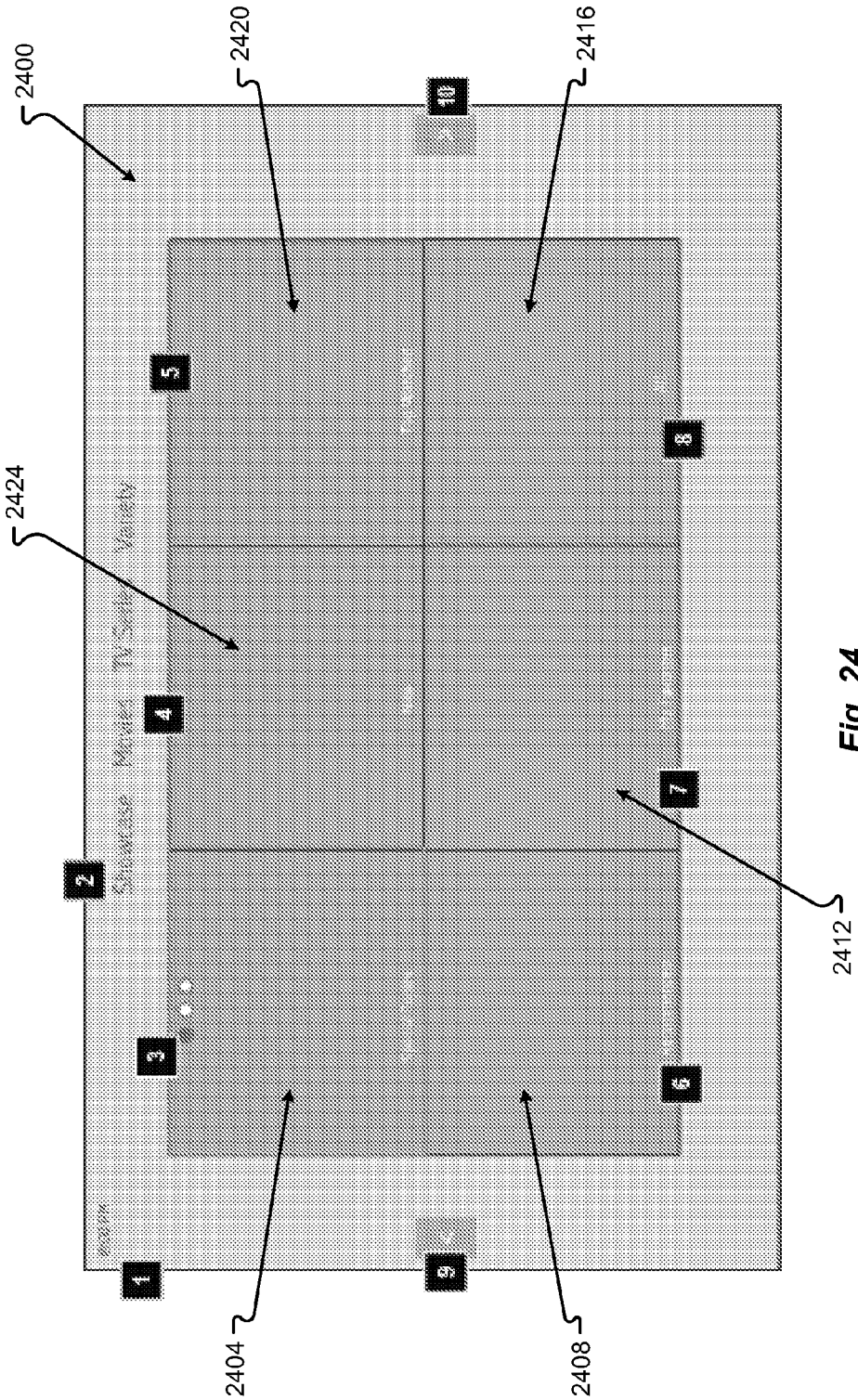

Fig. 24

2500
2504
1
2
3
Showcase
Movies
Variety
Game of Thrones
My Favorites
Top Watched
Recommended
New

Fig. 25

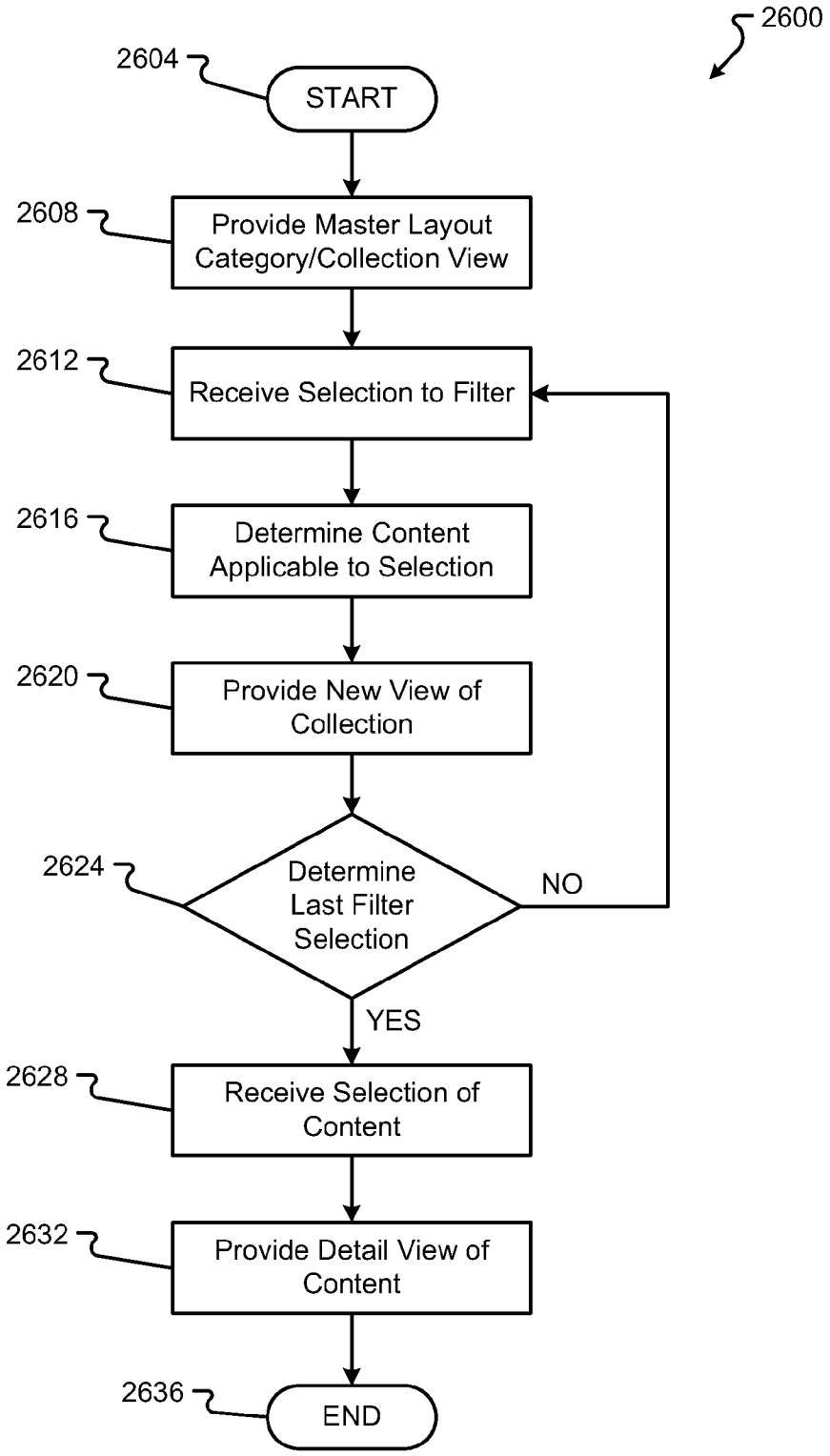
2600
2604
START
2608
Provide Master Layout Category/Collection View
2612
Receive Selection to Filter
2616
Determine Content Applicable to Selection
2620
Provide New View of Collection
2624
Determine Last Filter Selection
NO
YES
2628
Receive Selection of Content
2632
Provide Detail View of Content
2636
END

Fig. 26

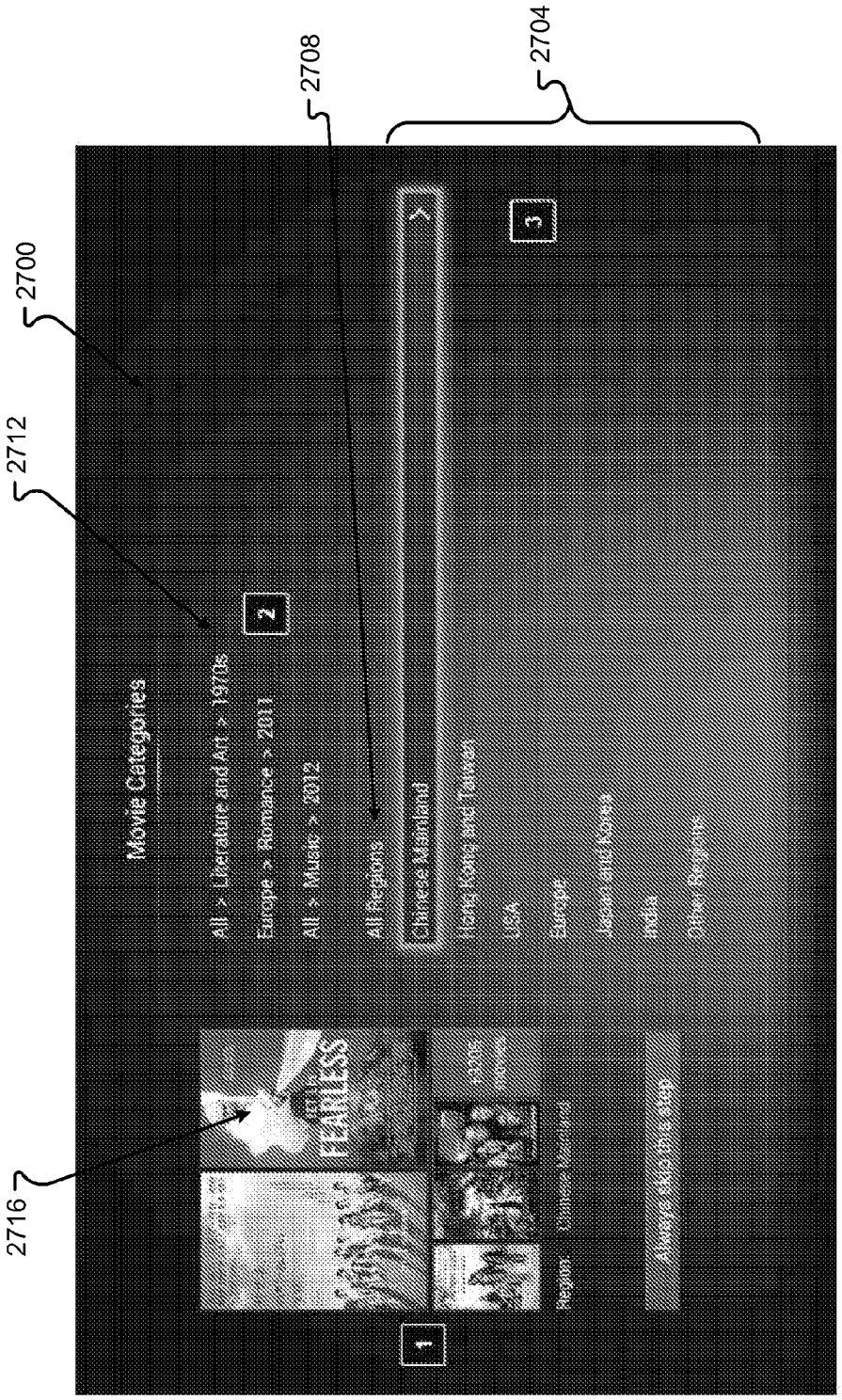
2700
2712
2716
2708
2704
Movie Categories
All > Literature and Art > 1970s
Europe > Romance > 2011
All > Music > 2012
All Regions
Chinese Mainland
Hong Kong and Taiwan
USA
Europe
Japan and Korea
India
Other Regions
Always displaying step
FEARLESS
1
2
3

Fig. 27A

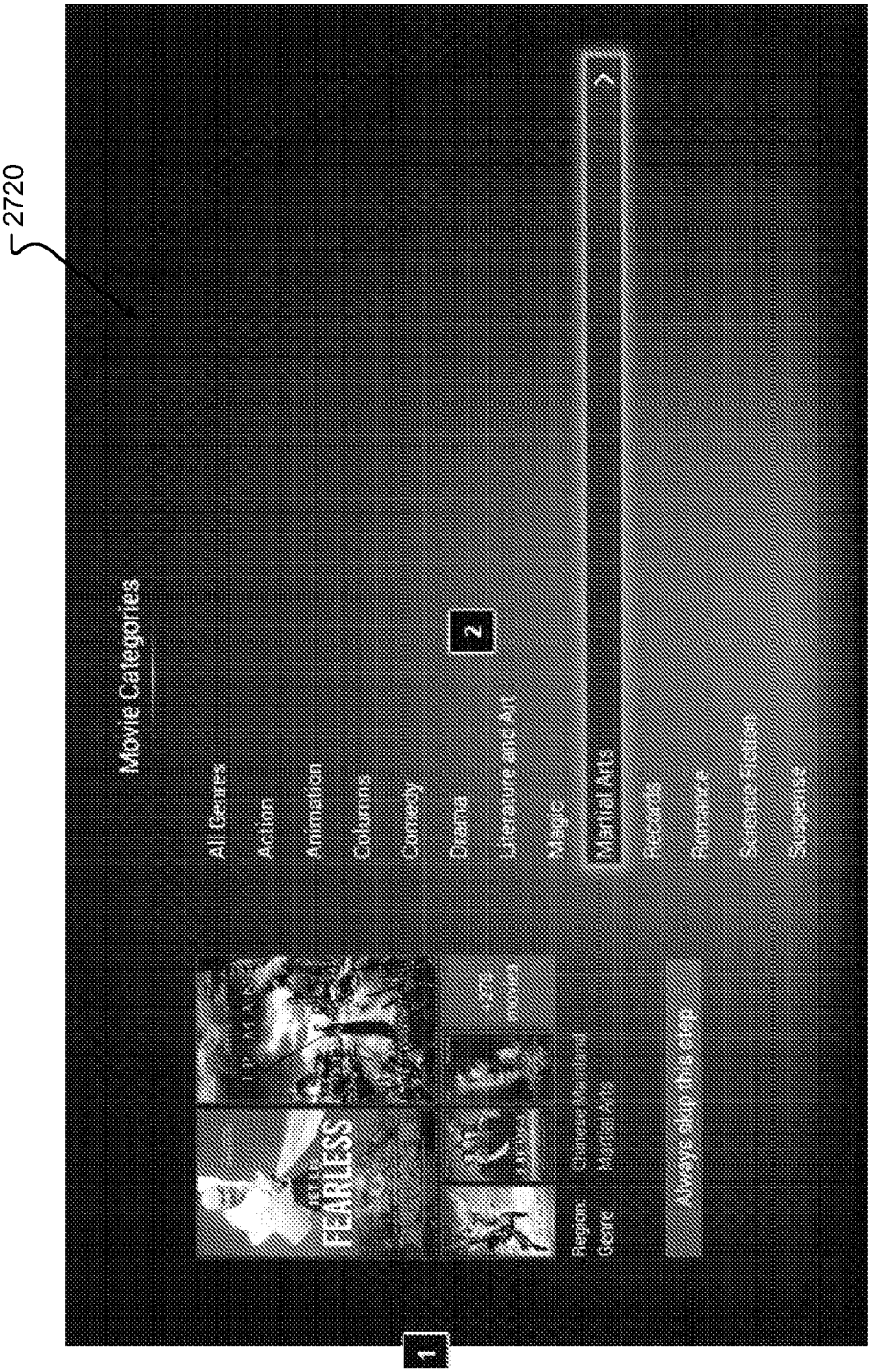
2720
Movie Categories
All Genres
Action
Animation
Columns
Comedy
Drama
Literature and Art
Magic
Martial Arts
Records
Romance
Science Fiction
Suspense
FEARLESS
Region:
Genre:
Always skip this step
1
2

Fig. 27B

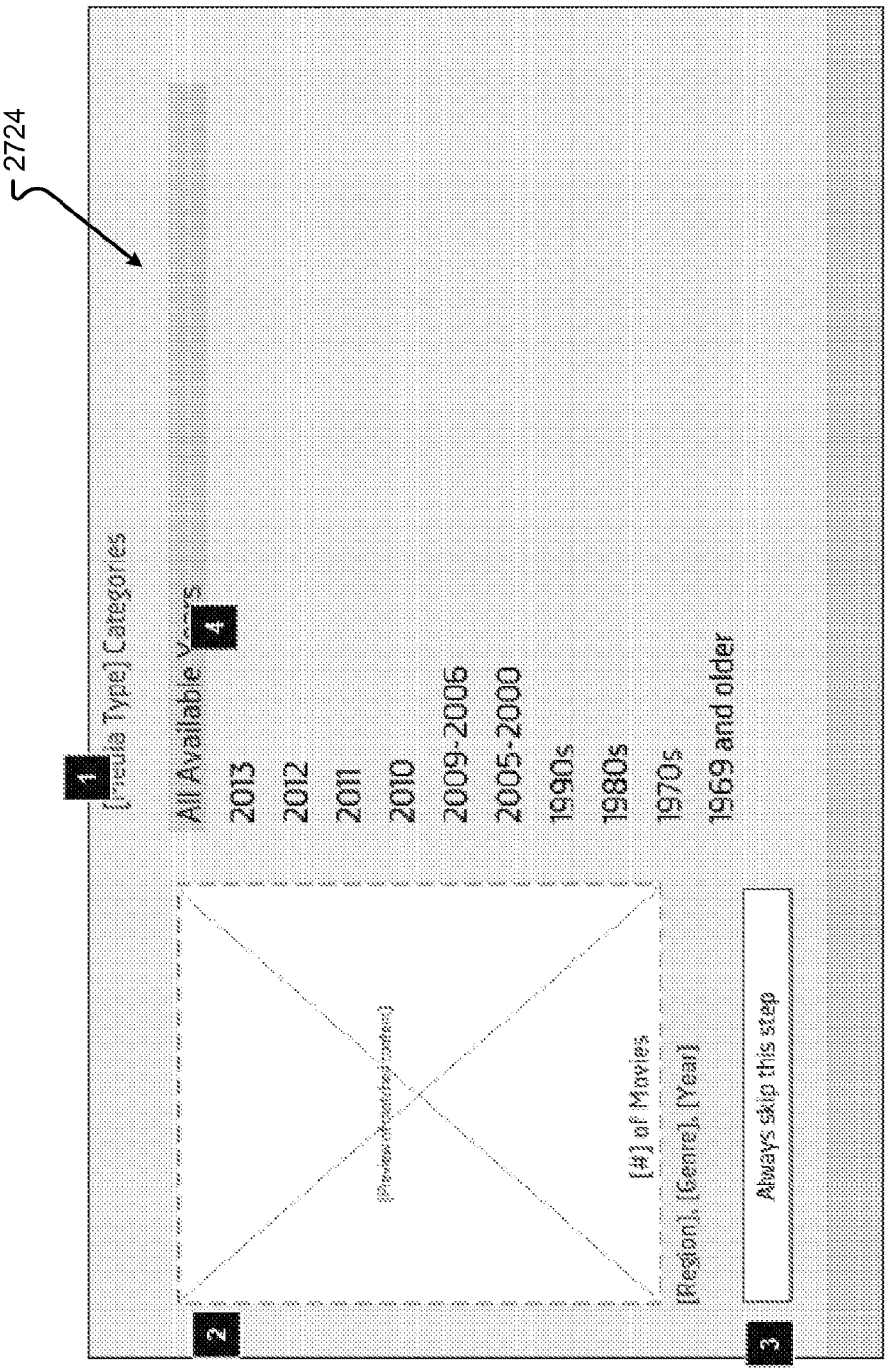
2724
1
[Media Type] Categories
All Available Years
4
2013
2012
2011
2010
2009-2006
2005-2000
1990s
1980s
1970s
1969 and older
2
[#] of Movies
[Region], [Genre], [Year]
Always skip this step
3

Fig. 27C

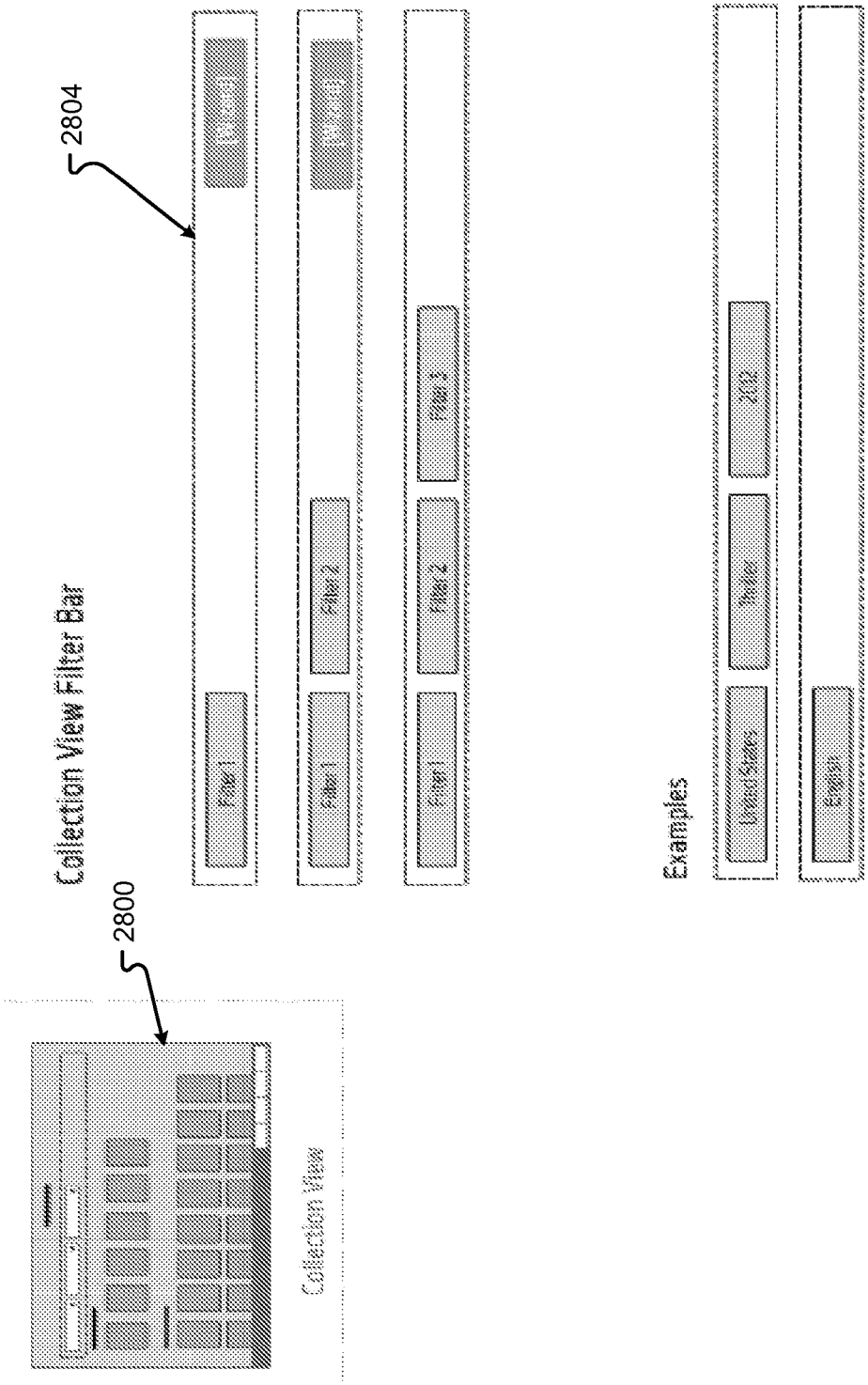
2800
Collection View
2804
Collection View Filter Bar
Filter 1
Filter 1
Filter 2
Filter 1
Filter 2
Filter 3
Examples
United States
Texas
2012
England

Fig. 28

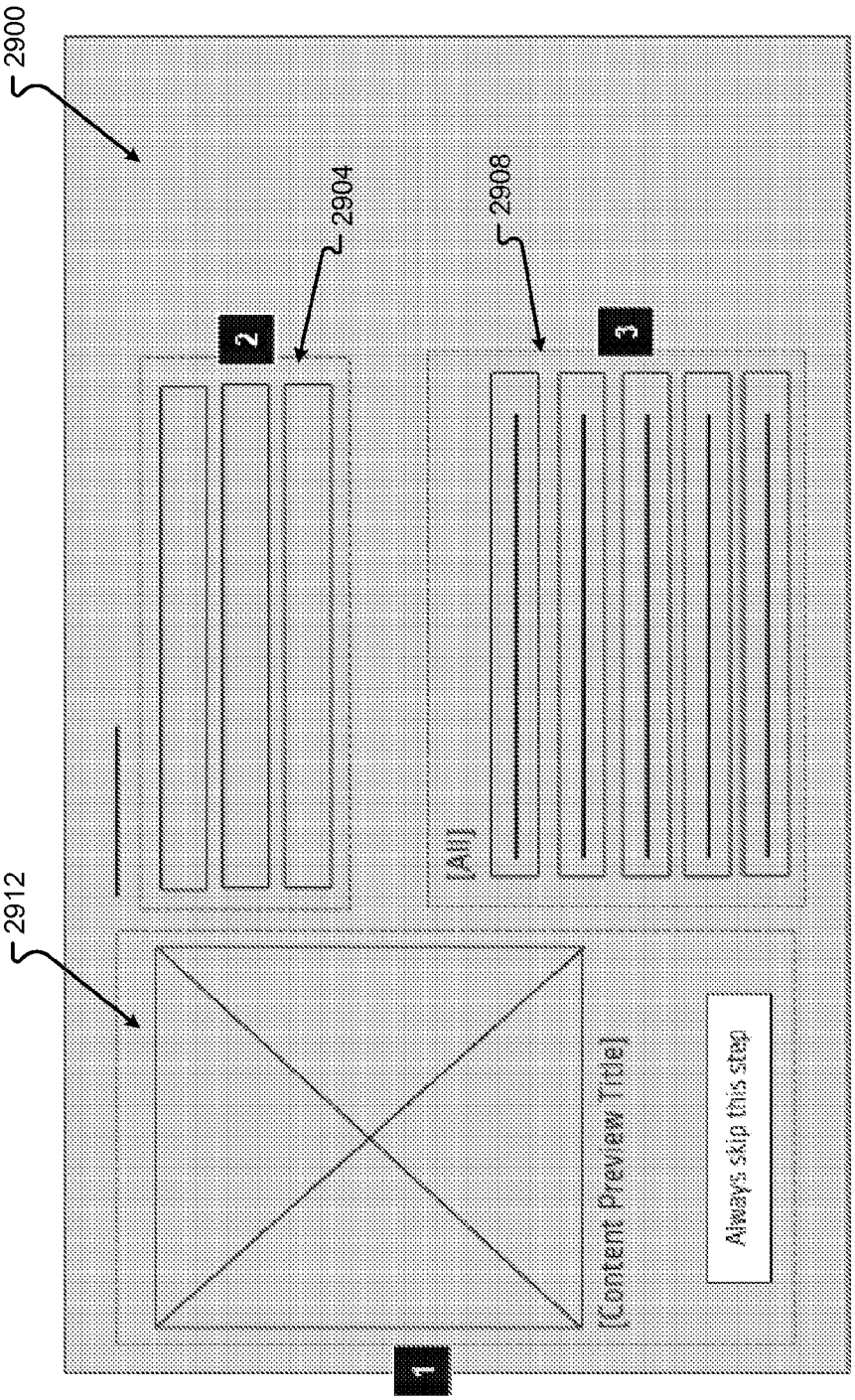
2900
2904
2908
2912
2
3
1
[All]
[Content Preview Title]
Always skip this step

Fig. 29

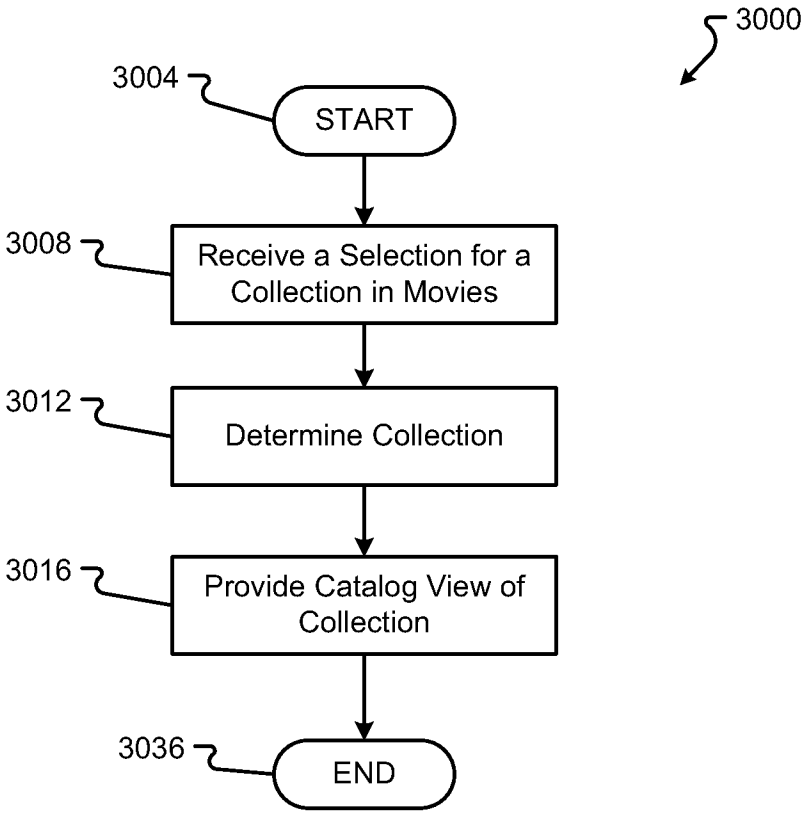
3000
3004
START
3008
Receive a Selection for a Collection in Movies
3012
Determine Collection
3016
Provide Catalog View of Collection
3036
END

Fig. 30

Fig. 31

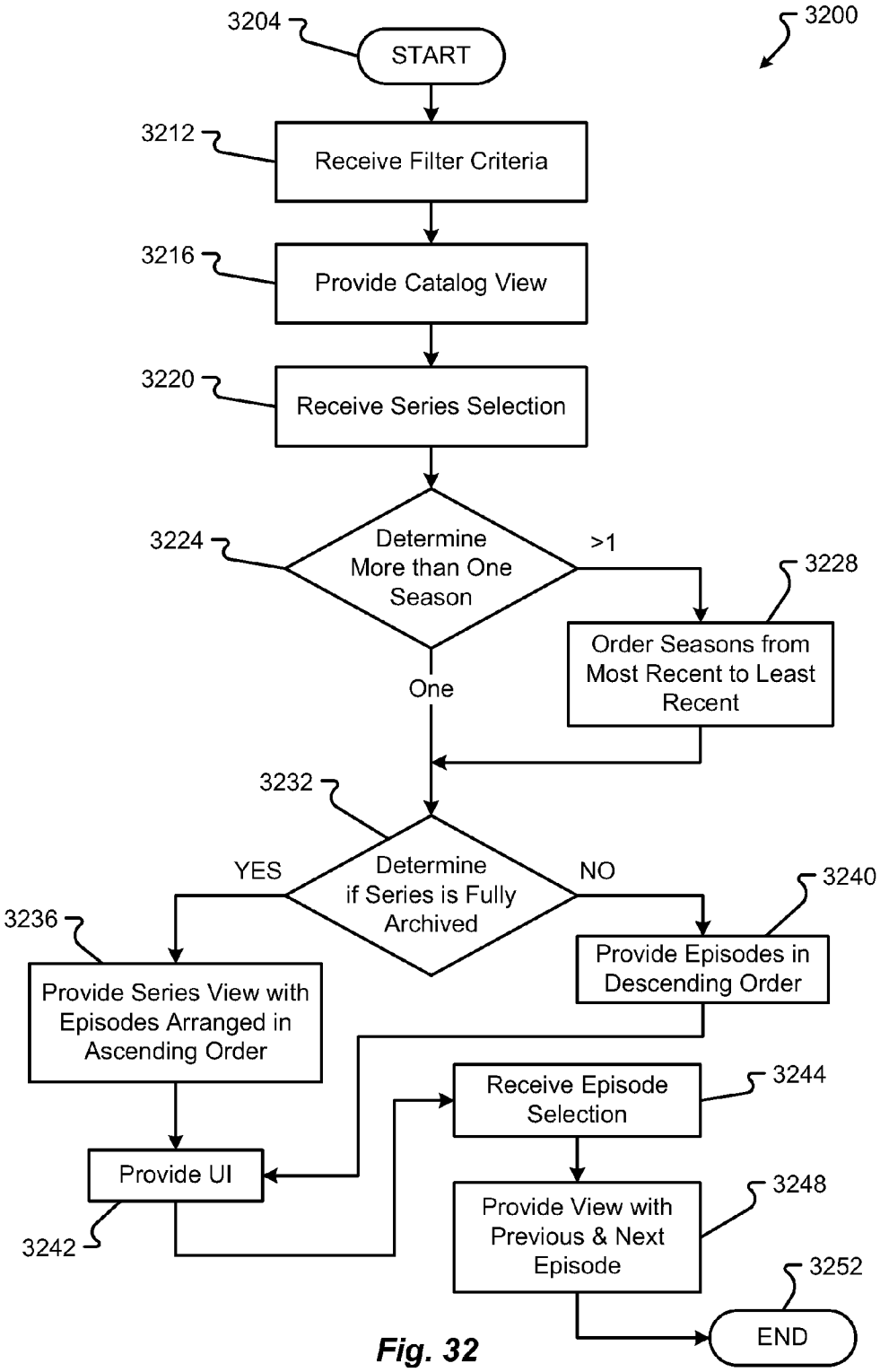
3200
3204
START
3212
Receive Filter Criteria
3216
Provide Catalog View
3220
Receive Series Selection
3224
Determine More than One Season
>1
3228
Order Seasons from Most Recent to Least Recent
One
3232
Determine if Series is Fully Archived
YES
NO
3236
Provide Series View with Episodes Arranged in Ascending Order
3240
Provide Episodes in Descending Order
3244
Receive Episode Selection
Provide UI
3242
3248
Provide View with Previous & Next Episode
3252
END

Fig. 32

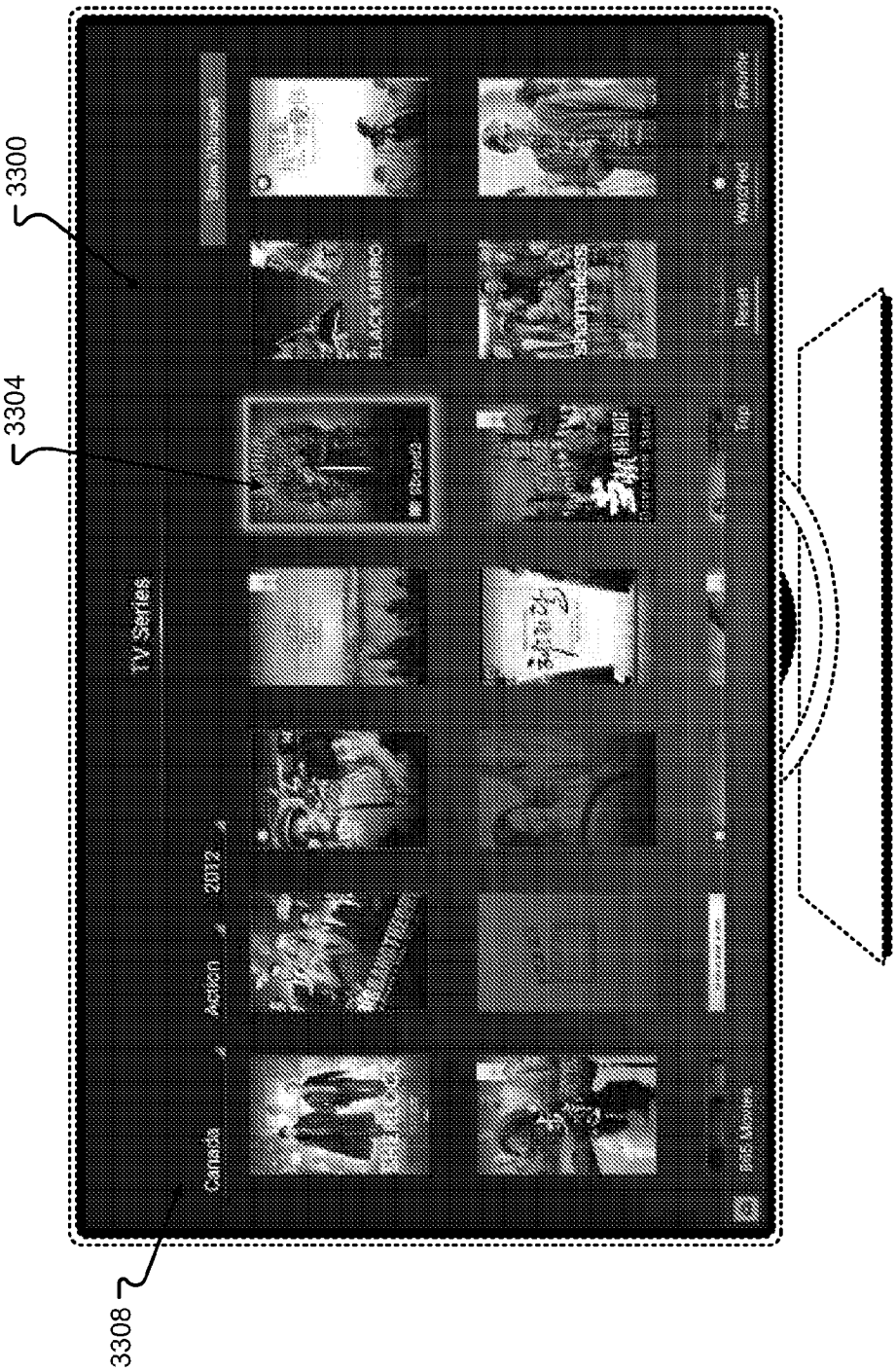

Fig. 33

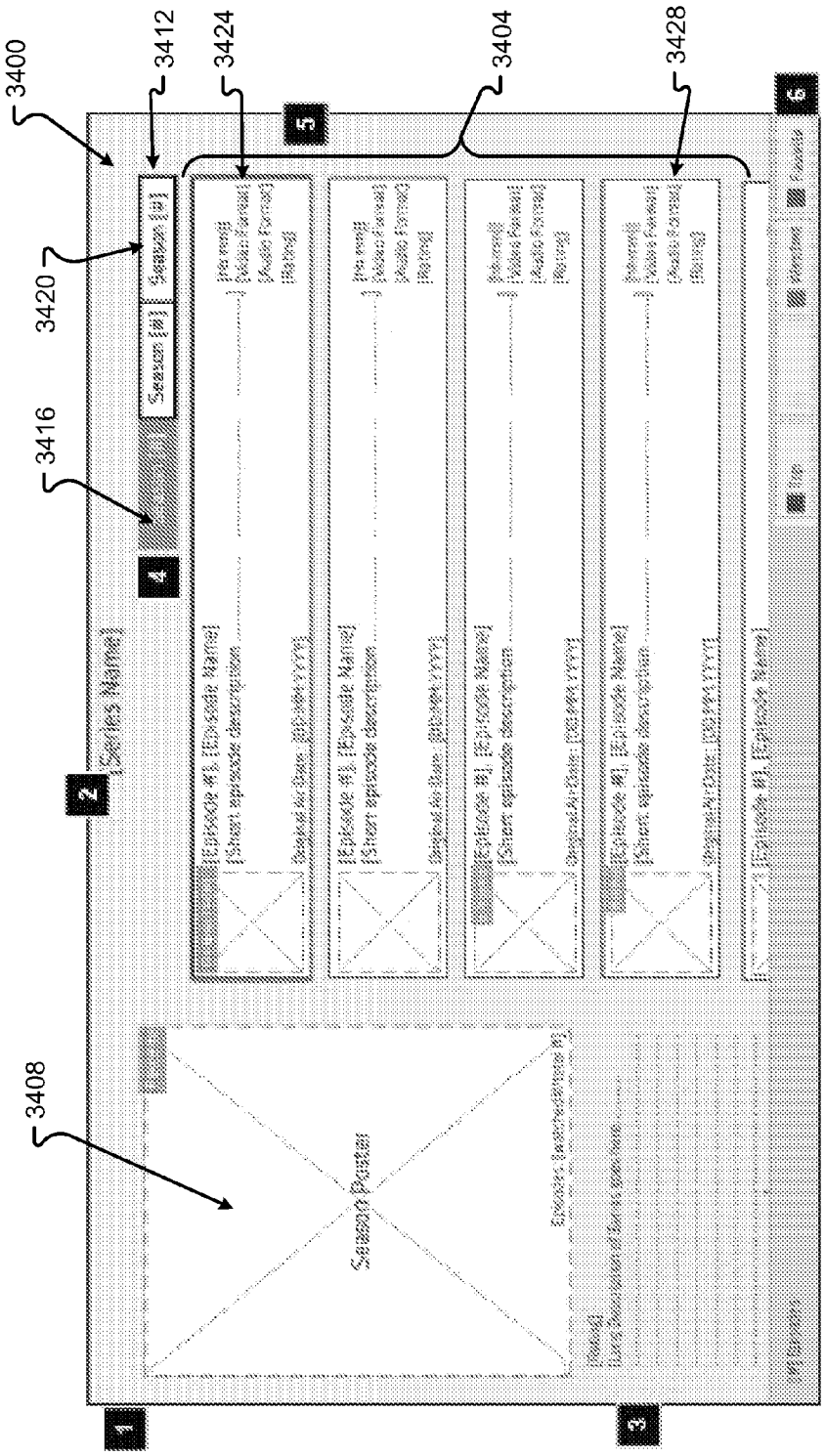
3400
3412
3424
3404
3428
3420
3416
3408
1
2
3
4
5
6
[Series Name]
Season [#]
Season [#]
[Episode #], [Episode Name]
[Episode #], [Episode Name]
[Episode #], [Episode Name]
[Episode #], [Episode Name]
Season Poster

Fig. 34

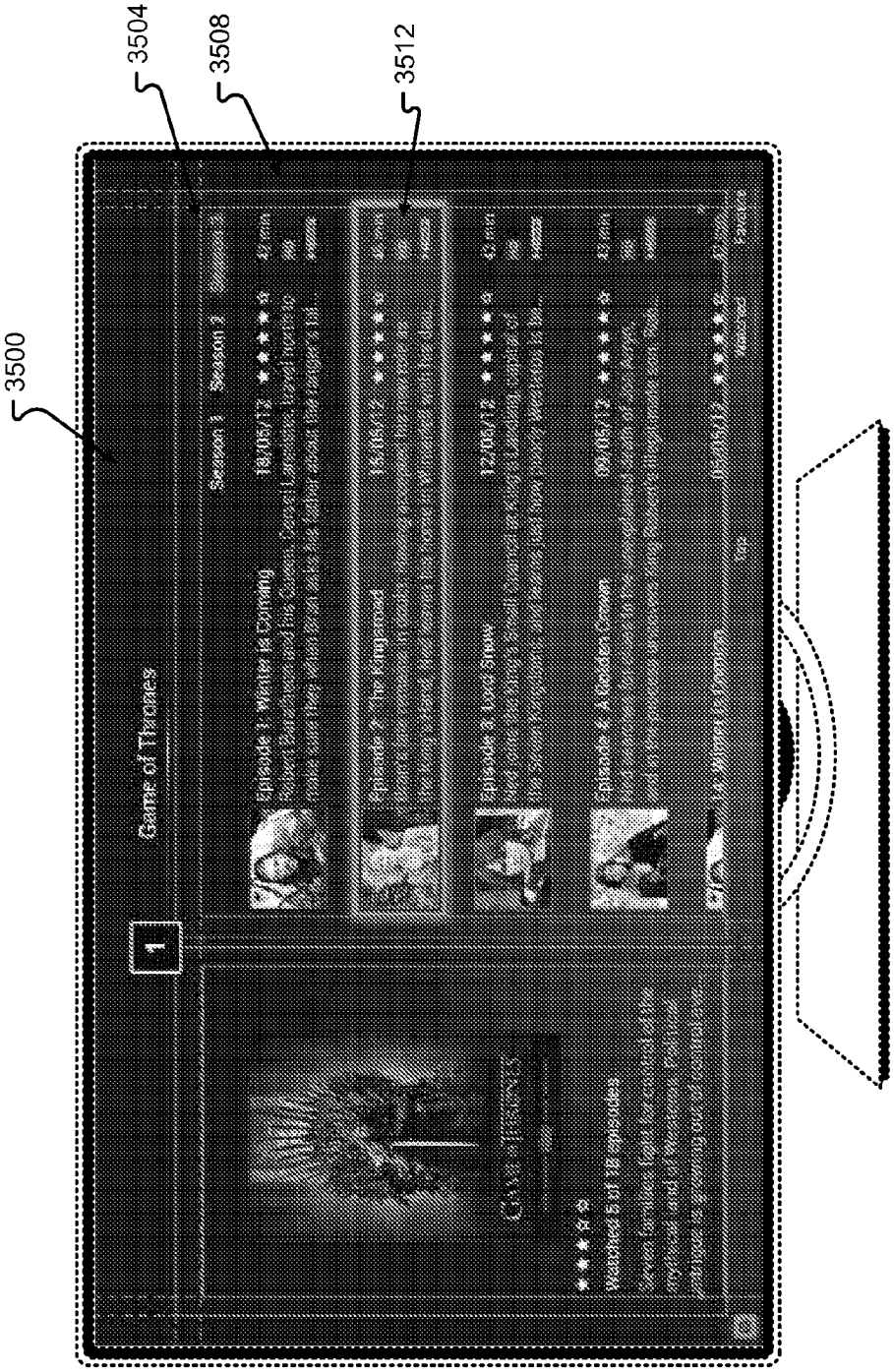
3500
3504
3508
3512
Game of Thrones
Season 1
Season 2
Episode 1: Winter is Coming
Episode 2: The Kingsroad
Episode 3: Lord Snow
Episode 4: Cripples, Bastards, and Broken Things
Episode 5: The Wolf and the Lion
Episode 6: A Golden Crown
Episode 7: You Win or You Die
Episode 8: The Pointy End
Episode 9: Baelor
Episode 10: Fire and Blood

Fig. 35

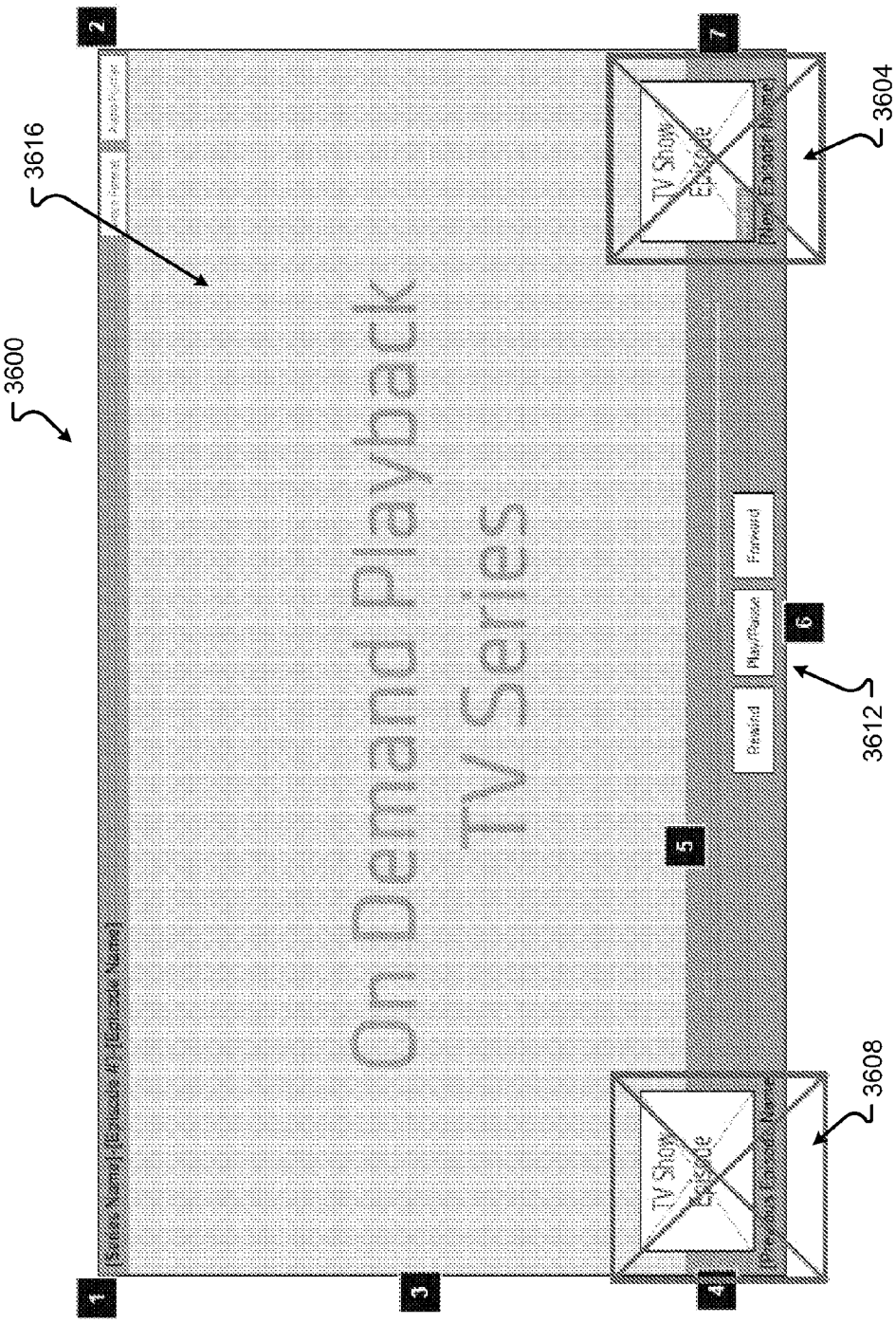
3600
3616
On Demand Playback
TV Series
TV Show
Episode
3604
3612
3608
Rewind
Play/Pause
Forward
1
2
3
4
5
6
7

Fig. 36

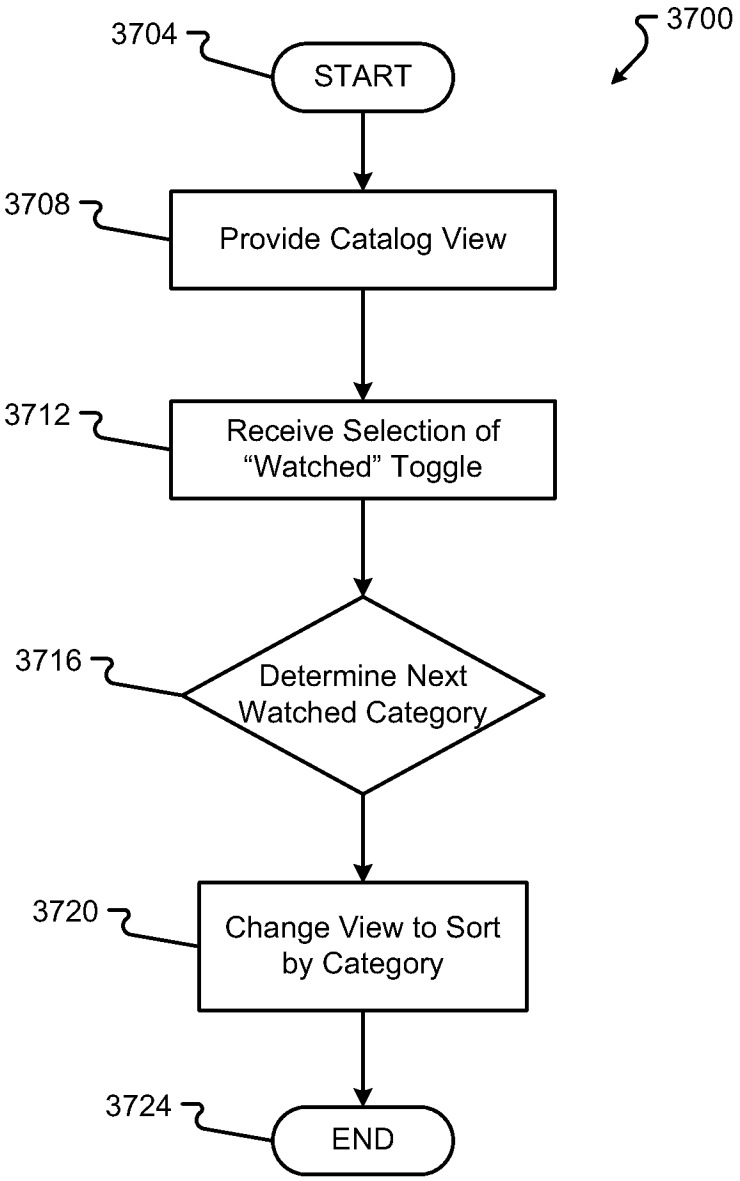
3700
3704
START
3708
Provide Catalog View
3712
Receive Selection of "Watched" Toggle
3716
Determine Next Watched Category
3720
Change View to Sort by Category
3724
END

Fig. 37

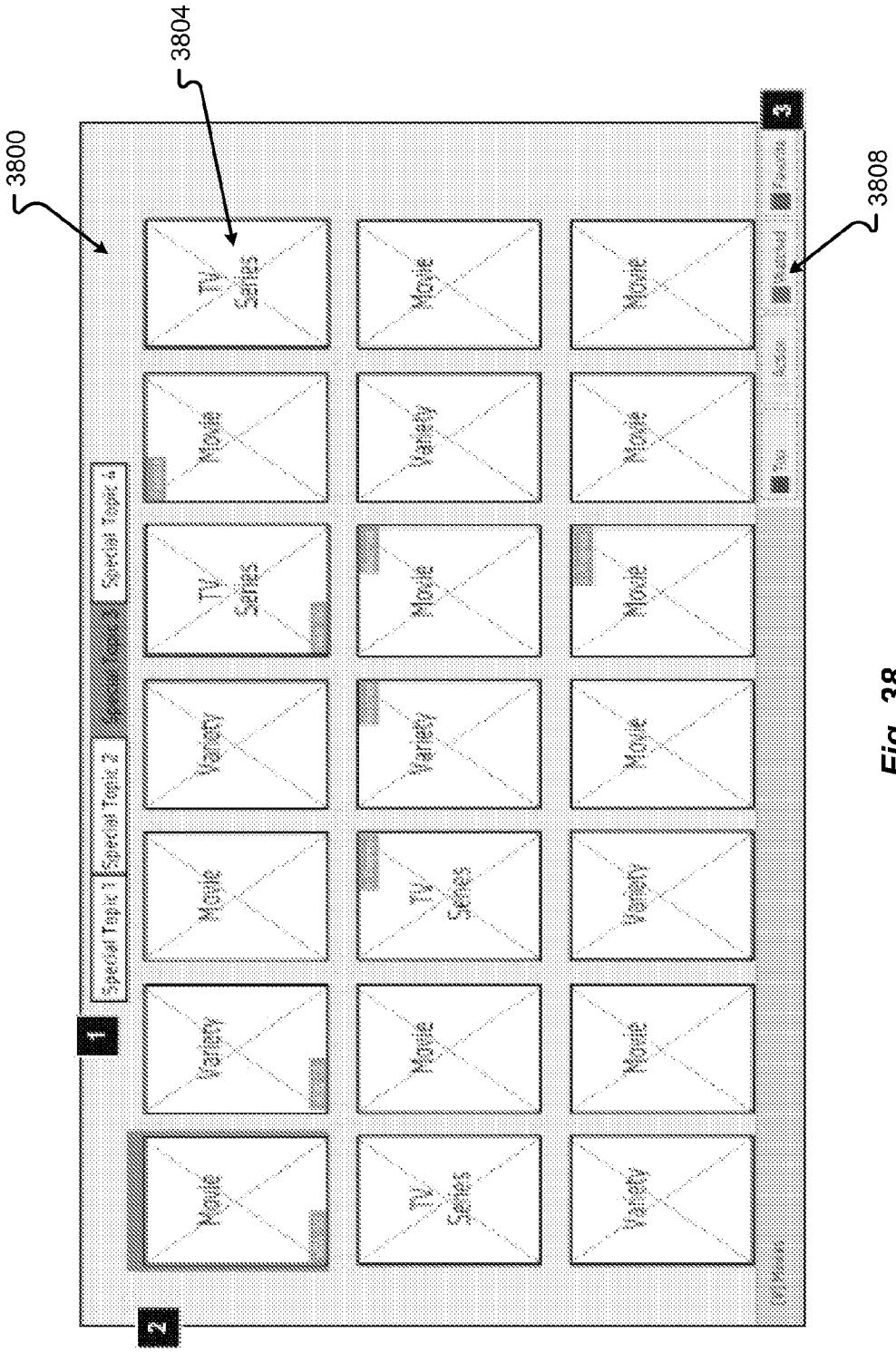
3800
3804
3808
1
2
3
Special Topic 1
Special Topic 2
Special Topic 3
Special Topic 4
Movie
Variety
TV Series

Fig. 38

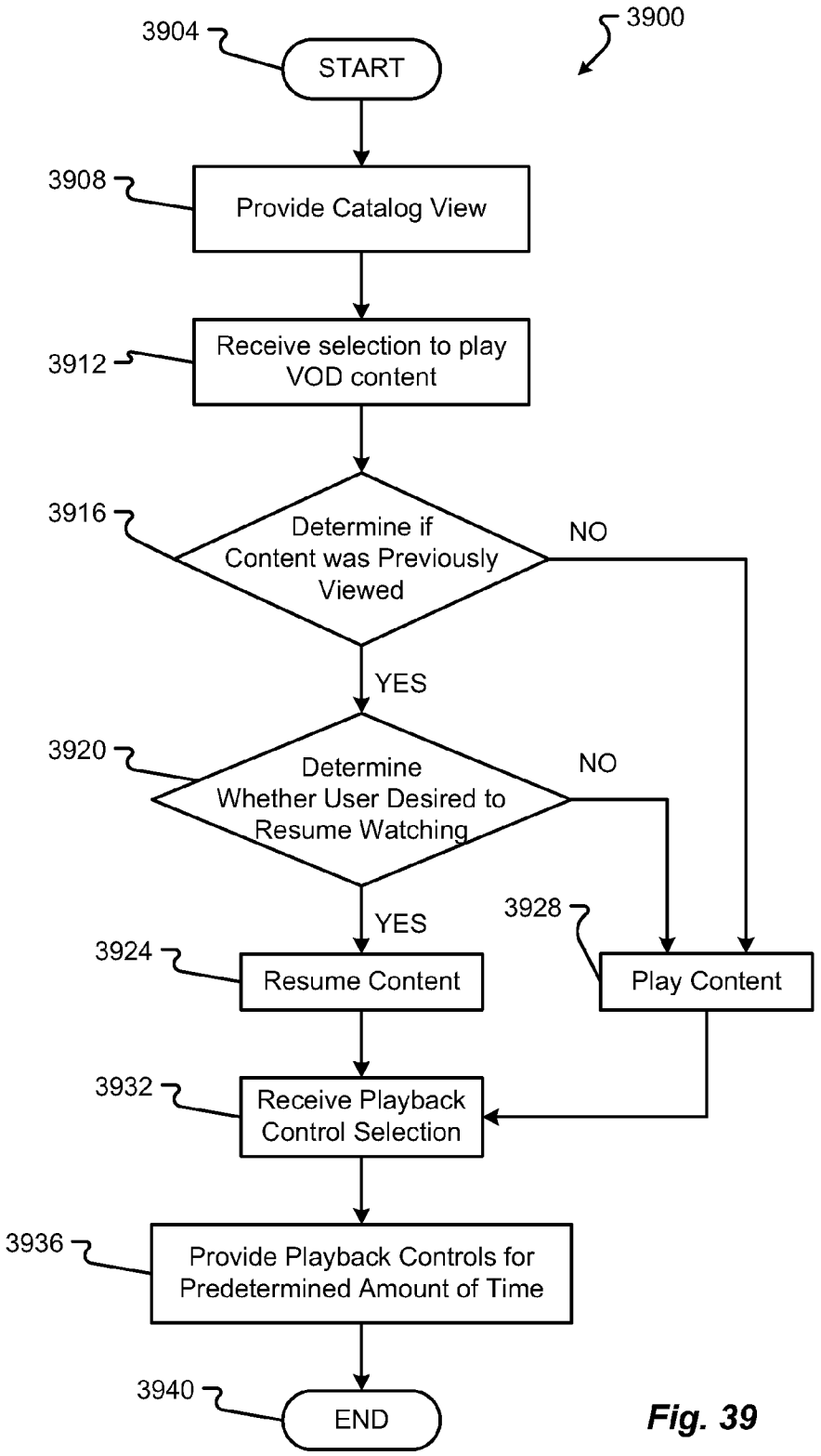
3900
3904
START
3908
Provide Catalog View
3912
Receive selection to play VOD content
3916
Determine if Content was Previously Viewed
NO
YES
3920
Determine Whether User Desired to Resume Watching
NO
YES
3928
3924
Resume Content
Play Content
3932
Receive Playback Control Selection
3936
Provide Playback Controls for Predetermined Amount of Time
3940
END

Fig. 39

SYSTEMS AND METHODS FOR PROVIDING VIDEO ON DEMAND IN AN INTELLIGENT TELEVISION

CROSS REFERENCE TO RELATED APPLICATION

The present application is a continuation of and claims priority to U.S. patent application Ser. No. 13/970,427; U.S. patent application Ser. No. 13/970,388; U.S. patent application Ser. No. 13/970,409; U.S. patent application Ser. No. 13/970,420; U.S. patent application Ser. No. 13/970,442; and U.S. patent application Ser. No. 13/970,450, all filed on Aug. 19, 2013, each of which claims the benefits of and priority, under 35 U.S.C. §119(e), to U.S. Provisional Application Ser. No. 61/684,672 filed Aug. 17, 2012, "Smart TV"; 61/702,650 filed Sep. 18, 2012, "Smart TV"; 61/697,710 filed Sep. 6, 2012, "Social TV"; 61/700,182 filed Sep. 12, 2012, "Social TV Roadmap"; 61/736,692 filed Dec. 13, 2012, "SmartTV"; 61/798,821 filed Mar. 15, 2013, "SmartTV"; 61/804,942 filed Mar. 25, 2013, "SmartTV"; 61/804,998 filed Mar. 25, 2013, "SmartTV"; 61/804,971 filed Mar. 25, 2013, "SmartTV"; 61/804,990 filed Mar. 25, 2013, "SmartTV"; 61/805,003 filed Mar. 25, 2013, "SmartTV"; 61/805,053 filed Mar. 25, 2013, "SmartTV"; 61/805,030 filed Mar. 25, 2013, "SmartTV"; 61/805,027 filed Mar. 25, 2013, "SmartTV"; 61/805,042 filed Mar. 25, 2013, "SmartTV"; and 61/805,038 filed Mar. 25, 2013, "SmartTV." Each of the aforementioned documents is incorporated herein by reference in their entirety for all that they teach and for all purposes.

BACKGROUND

Consolidation of device features or technological convergence is in an increasing trend. Technological convergence describes the tendency for different technological systems to evolve toward performing similar tasks. As people use more devices, the need to carry those devices, charge those devices, update software on those devices, etc. becomes more cumbersome. To compensate for these problems, technology companies have been integrating features from different devices into one or two multi-functional devices. For example, cellular phones are now capable of accessing the Internet, taking photographs, providing calendar functions, etc.

The consolidation trend is now affecting the design and functionality of devices generally used in the home. For example, audio receivers can access the Internet; digital video recorders can store or provide access to digital photographs, etc. The television in home audio/video systems remains a cornerstone device because the display function cannot be integrated into other devices. As such, consolidating home devices leads to integrating features and functionality into the television. The emergence of the Smart Television (Smart TV) is evidence of the trend to consolidate functionality into the television.

A Smart TV is generally conceived as a device that integrates access to the Internet and Web 2.0 features into television sets. The Smart TV represents the trend of technological convergence between computers and television sets. The Smart TV generally focuses on online interactive media, Internet TV, on-demand streaming media, and generally does not focus on traditional broadcast media. Unfortunately, most Smart TVs have yet to provide seamless and intuitive user interfaces for navigating and/or executing the various features of the Smart TV. As such, there are still

issues with the consolidation of features and the presentation of these features in Smart TVs.

SUMMARY

There is a need for an Intelligent TV with intuitive user interfaces and with seamless user interaction capability. These and other needs are addressed by the various aspects, embodiments, and/or configurations of the present disclosure. Also, while the disclosure is presented in terms of exemplary embodiments, it should be appreciated that individual aspects of the disclosure can be separately claimed.

A method for providing video-on-demand (VOD) in an intelligent television, the method comprising: receiving, by a processor of the intelligent television, content for VOD; determining metadata characteristics for the content; storing the metadata characteristics with the content in a database for VOD content; and providing a first view of the VOD content based on the metadata characteristics.

An aspect of the above method includes wherein the metadata characteristics include a location at which the content was created.

An aspect of the above method includes wherein the metadata characteristics include a time at which the content was created.

An aspect of the above method includes wherein the metadata characteristics include a genre associated with the content.

An aspect of the above method includes wherein the first view is sorted based on at least one of the metadata characteristics.

An aspect of the above method further comprises determining if a user-defined criteria exists for organizing the content.

An aspect of the above method further comprises: receiving a user-defined criteria; and storing the received user-defined criteria.

An aspect of the above method further comprises sorting the content based on the received user-defined criteria.

An aspect of the above method further comprises providing a second view of the content based on the sort of the content with the received user-defined criteria.

An aspect of the above method includes wherein the user-defined criteria include one or more of a favorite or adult-only designation.

An intelligent television system comprising: a memory operable to store video-on-demand (VOD) content; a processor in communication with the memory, the processor operable to: execute a VOD data service operable to: receive content for VOD; determine metadata characteristics for the content; store the metadata characteristics with the content in a database for VOD content; and execute a user interface application in communication with the VOD data service, the user interface application operable to provide a first view of the VOD content based on the metadata characteristics.

An aspect of the above intelligent television system includes wherein the metadata characteristics include one or more of a location at which the content was created, a time at which the content was created, or a genre associated with the content.

An aspect of the above intelligent television system includes wherein the first view is sorted based on at least one of the metadata characteristics.

An aspect of the above intelligent television system includes wherein the VOD data service is further operable

to: determine if a user-defined criteria exists for organizing the content; and sort the content based on the received user-defined criteria.

An aspect of the above intelligent television system includes wherein the user-defined criteria include one or more of a favorite or adult-only designation.

A computer readable medium having stored thereon processor executable instructions that cause a computing system to execute a method, the instructions comprising: instructions to receive content for VOD; instructions to determine metadata characteristics for the content; instructions to store the metadata characteristics with the content in a database for VOD content; and instructions to provide a first view of the VOD content based on the metadata characteristics.

An aspect of the above computer readable medium includes wherein the metadata characteristics include one or more of a location at which the content was created, a time at which the content was created, or a genre associated with the content.

An aspect of the above computer readable medium includes wherein the first view is sorted based on at least one of the metadata characteristics.

An aspect of the above computer readable medium further comprises instructions to: determine if a user-defined criteria exists for organizing the content; and sort the content based on the received user-defined criteria.

An aspect of the above computer readable medium includes wherein the user-defined criteria include one or more of a favorite or adult-only designation.

A method for providing video-on-demand (VOD) in an intelligent television, the method comprising: receiving, by a processor of the intelligent television, a first selection for VOD content; in response to the first selection, providing a master view of VOD content; receiving a second selection for VOD content; in response to the second selection, providing a collection view of the VOD content; receiving a third selection for VOD content; and in response to the third selection, providing either a detail view or a digest view of the VOD content.

An aspect of the above method further comprises: determining if the selection in the collection view is for a series or one of a movie or single show; if the selection in the collection view is for a series, providing the digest view; and if the selection in the collection view is for one of a movie or single show, providing a detail view.

An aspect of the above method includes wherein the digest view provides a listing of two or more episodes associated with the series.

An aspect of the above method further comprises: receiving a fourth selection of an episode in the digest view; and in response to the fourth selection, providing a player to present the episode to the user.

An aspect of the above method further comprises: receiving a fifth selection of a user interface device to play the movie or single show; and in response to the fifth selection, providing a player to present the movie or single show to the user.

An aspect of the above method includes wherein a navigation to view VOD content is an ordered set of user interfaces, and wherein the order includes a master view at a top level, a collection view at a second level, either a digest view or detail view at a third level, and a player view at a fourth and bottom level.

An aspect of the above method includes wherein a master view includes at least two user-selectable devices to view a collection view based on one of two or more criteria.

An aspect of the above method includes wherein the master view includes a navigation bar to select between types of content.

An aspect of the above method includes wherein the types of content include showcase content, movies content, television series content, or variety content.

An aspect of the above method includes wherein the master layout includes user-selectable devices for viewing a collection of content based on special topics, newest content, top watched content, recommended content, or favorites content.

An intelligent television system comprising: a memory operable to store video-on-demand (VOD) content; a processor in communication with the memory, the processor operable to: execute a user interface application operable to: receive a first selection for VOD content; in response to the first selection, provide a master view of VOD content; receive a second selection for VOD content; in response to the second selection, provide a collection view of the VOD content; receive a third selection for VOD content; and in response to the third selection, provide either a detail view or a digest view of the VOD content.

An aspect of the above intelligent television system includes wherein the user interface application is further operable to: determine if the selection in the collection view is for a series or one of a movie or single show; if the selection in the collection view is for a series, provide the digest view, wherein the digest view provides a listing of two or more episodes associated with the series; if the selection in the collection view is for one of a movie or single show, provide a detail view; receive a fourth selection of an episode in the digest view; and in response to the fourth selection, provide a player to present the episode to the user.

An aspect of the above intelligent television system includes wherein the user interface application is further operable to: receive a fifth selection of a user interface device to play the movie or single show; and in response to the fifth selection, provide a player to present the movie or single show to the user.

An aspect of the above intelligent television system includes wherein a navigation to view VOD content is an ordered set of user interfaces, and wherein the order includes a master view at a top level, a collection view at a second level, either a digest view or detail view at a third level, and a player view at a fourth and bottom level.

An aspect of the above intelligent television system includes wherein a master view includes at least two user-selectable devices to view a collection view based on one of two or more criteria, wherein the master view includes a navigation bar to select between types of content, wherein the types of content include showcase content, movies content, television series content, or variety content, and wherein the master layout includes user-selectable devices for viewing a collection of content based on special topics, newest content, top watched content, recommended content, or favorites content.

A computer readable medium having stored thereon processor executable instructions that cause a computing system to execute a method, the instructions comprising: instructions to receive a first selection for VOD content; in response to the first selection, instructions to provide a master view of VOD content; instructions to receive a second selection for VOD content; in response to the second selection, instructions to provide a collection view of the VOD content; instructions to receive a third selection for

VOD content; and in response to the third selection, instructions to provide either a detail view or a digest view of the VOD content.

An aspect of the above computer readable medium further comprises instructions to: determine if the selection in the collection view is for a series or one of a movie or single show; if the selection in the collection view is for a series, provide the digest view, wherein the digest view provides a listing of two or more episodes associated with the series; if the selection in the collection view is for one of a movie or single show, provide a detail view; receive a fourth selection of an episode in the digest view; and in response to the fourth selection, provide a player to present the episode to the user.

An aspect of the above computer readable medium further comprises instructions to: receive a fifth selection of a user interface device to play the movie or single show; and in response to the fifth selection, provide a player to present the movie or single show to the user.

An aspect of the above computer readable medium includes wherein a navigation to view VOD content is an ordered set of user interfaces, and wherein the order includes a master view at a top level, a collection view at a second level, either a digest view or detail view at a third level, and a player view at a fourth and bottom level.

An aspect of the above computer readable medium includes wherein a master view includes at least two user-selectable devices to view a collection view based on one of two or more criteria, wherein the master view includes a navigation bar to select between types of content, wherein the types of content include showcase content, movies content, television series content, or variety content, and wherein the master layout includes user-selectable devices for viewing a collection of content based on special topics, newest content, top watched content, recommended content, or favorites content.

A method for providing video-on-demand (VOD) in an intelligent television, the method comprising: receiving, by a processor of the intelligent television, a selection for VOD content; providing a first user interface having a selection for one or more of showcase content, movie content, television content, or variety content; receiving a second selection; determining whether the second selection is for showcase content, movie content, television content, or variety content; and based on the determination, provide a second user interface having content associated showcase content, movie content, television content, or variety content.

An aspect of the above method includes wherein the selections for showcase content, movie content, television content, or variety content are provided in a navigation bar.

An aspect of the above method includes wherein the second selection is in the navigation bar.

An aspect of the above method includes wherein a third user interface is associated with showcase content, wherein the third user interface includes first set of user-selectable devices for one or more of last viewed content, top watched content, high definition content, or special topics content.

An aspect of the above method includes wherein a fourth user interface is associated with television content, wherein the fourth user interface includes second set of user-selectable devices for one or more of new content, top watched content, recommended content, or special topics content.

An aspect of the above method includes wherein a fifth user interface is associated with variety content, wherein the fifth user interface includes third set of user-selectable devices for one or more of new content, top watched content, recommended content, or special topics content.

An aspect of the above method includes wherein a sixth user interface is associated with movie content, wherein the sixth user interface includes fourth set of user-selectable devices for one or more of new content, top watched content, recommended content, or special topics content.

An aspect of the above method includes wherein a first user interface is a master view of all content.

An aspect of the above method includes wherein the first user interface includes fifth set of user-selectable devices for one or more of last watched content, top watched content, high definition content, or special topics content.

An aspect of the above method includes wherein at least one user-selectable device in the first, second, third, fourth, or fifth set of user-selectable devices includes revolving thumbnails associated with at least two different items of content.

An intelligent television system comprising: a memory operable to store video-on-demand (VOD) content; a processor in communication with the memory, the processor operable to: execute a user interface application operable to: receive a selection for VOD content; provide a first user interface have a selection for one or more of showcase content, movie content, television content, or variety content; receive a second selection; determine whether the second selection is for showcase content, movie content, television content, or variety content; and based on the determination, provide a second user interface have content associated showcase content, movie content, television content, or variety content.

An aspect of the above intelligent television system includes wherein the selections for showcase content, movie content, television content, or variety content are provided in a navigation bar, and wherein the second selection is in the navigation bar.

An aspect of the above intelligent television system includes wherein a third user interface is associated with showcase content, wherein the third user interface includes first set of user-selectable devices for one or more of last viewed content, top watched content, high definition content, or special topics content, wherein a fourth user interface is associated with television content, wherein the fourth user interface includes second set of user-selectable devices for one or more of new content, top watched content, recommended content, or special topics content, wherein a fifth user interface is associated with variety content, wherein the fifth user interface includes third set of user-selectable devices for one or more of new content, top watched content, recommended content, or special topics content, and wherein a sixth user interface is associated with movie content, wherein the sixth user interface includes fourth set of user-selectable devices for one or more of new content, top watched content, recommended content, or special topics content.

An aspect of the above intelligent television system includes wherein a first user interface is a master view of all content, and wherein the first user interface includes fifth set of user-selectable devices for one or more of last watched content, top watched content, high definition content, or special topics content.

An aspect of the above intelligent television system includes wherein at least one user-selectable device in the first, second, third, fourth, or fifth set of user-selectable devices includes revolving thumbnails associated with at least two different items of content.

A computer readable medium having stored thereon processor executable instructions that cause a computing system to execute a method, the instructions comprising:

instructions to receive a selection for VOD content; instructions to provide a first user interface have a selection for one or more of showcase content, movie content, television content, or variety content; instructions to receive a second selection; instructions to determine whether the second selection is for showcase content, movie content, television content, or variety content; and based on the determination, instructions to provide a second user interface have content associated showcase content, movie content, television content, or variety content.

An aspect of the above computer readable medium includes wherein the selections for showcase content, movie content, television content, or variety content are provided in a navigation bar, and wherein the second selection is in the navigation bar.

An aspect of the above computer readable medium includes wherein a third user interface is associated with showcase content, wherein the third user interface includes first set of user-selectable devices for one or more of last viewed content, top watched content, high definition content, or special topics content, wherein a fourth user interface is associated with television content, wherein the fourth user interface includes second set of user-selectable devices for one or more of new content, top watched content, recommended content, or special topics content, wherein a fifth user interface is associated with variety content, wherein the fifth user interface includes third set of user-selectable devices for one or more of new content, top watched content, recommended content, or special topics content, and wherein a sixth user interface is associated with movie content, wherein the sixth user interface includes fourth set of user-selectable devices for one or more of new content, top watched content, recommended content, or special topics content.

An aspect of the above computer readable medium includes wherein a first user interface is a master view of all content, and wherein the first user interface includes fifth set of user-selectable devices for one or more of last watched content, top watched content, high definition content, or special topics content.

An aspect of the above computer readable medium includes wherein at least one user-selectable device in the first, second, third, fourth, or fifth set of user-selectable devices includes revolving thumbnails associated with at least two different items of content.

A method for providing video-on-demand (VOD) in an intelligent television, the method comprising: providing a first collection view of VOD content; receiving, by a processor of the intelligent television, a first selection to filter the VOD content; determining content applicable to the received selection; and providing a second collection view of the filtered content.

An aspect of the above method further comprises determining if the first selection is a last filter selection.

An aspect of the above method includes wherein if the first selection is not the last filter selection, further comprising: receiving, by a processor of the intelligent television, a second selection to filter the VOD content; determining content applicable to the second received selection; and providing a third collection view of the filtered content.

An aspect of the above method includes wherein if the first selection is not the last filter selection, further comprising: receiving a third selection of an item of content in the second collection view; and providing a detail view of the selected content.

An aspect of the above method includes wherein the first selection to filter includes a filter criteria.

An aspect of the above method includes wherein the filter criteria is a location where the content was made.

An aspect of the above method includes wherein the filter criteria is a year at which the content was made.

An aspect of the above method includes wherein the filter criteria is a genre associated with the content.

An aspect of the above method includes wherein the first criteria include two or more of the location, the year, and the genre.

An aspect of the above method includes wherein the detail view includes a description portion and a user-selectable device to play the content.

An intelligent television system comprising: a memory operable to store video-on-demand (VOD) content; a processor in communication with the memory, the processor operable to: execute a user interface application operable to: provide a first collection view of VOD content; receive a first selection to filter the VOD content; determine content applicable to the received selection; and provide a second collection view of the filtered content.

An aspect of the above intelligent television system includes wherein the user interface application is further operable to: wherein if the first selection is not the last filter selection, receive, by a processor of the intelligent television, a second selection to filter the VOD content; determine content applicable to the second received selection; provide a third collection view of the filtered content; wherein if the first selection is not the last filter selection, receive a third selection of an item of content in the second collection view; and provide a detail view of the selected content.

An aspect of the above intelligent television system includes wherein the first selection to filter includes a filter criteria.

An aspect of the above intelligent television system includes wherein the filter criteria is one of a location where the content was made, a year at which the content was made, or a genre associated with the content.

An aspect of the above intelligent television system includes wherein the first criteria include two or more of the location, the year, and the genre.

A computer readable medium having stored thereon processor executable instructions that cause a computing system to execute a method, the instructions comprising: instructions to provide a first collection view of VOD content; instructions to receive a first selection to filter the VOD content; instructions to determine content applicable to the received selection; and instructions to provide a second collection view of the filtered content.

An aspect of the above computer readable medium further comprises instructions to: wherein if the first selection is not the last filter selection, receive, by a processor of the intelligent television, a second selection to filter the VOD content; determine content applicable to the second received selection; provide a third collection view of the filtered content; wherein if the first selection is not the last filter selection, receive a third selection of an item of content in the second collection view; and provide a detail view of the selected content.

An aspect of the above computer readable medium includes wherein the first selection to filter includes a filter criteria.

An aspect of the above computer readable medium includes wherein the filter criteria is one of a location where the content was made, a year at which the content was made, or a genre associated with the content.

An aspect of the above computer readable medium includes wherein the first criteria include two or more of the location, the year, and the genre.

A method for providing video-on-demand (VOD) in an intelligent television, the method comprising: receiving, by a processor of the intelligent television, a filter criteria; providing a catalog view of one or more television series associated with the filter criteria; receiving a selection of a television series from the catalog view; determining if the television series includes one season; and if there is only one season, providing a first digest view of the season.

An aspect of the above method further comprises, if there is more than one season, providing a second digest view having two or more seasons in date order.

An aspect of the above method includes wherein the two or more seasons are ordered from most recent season to least recent season.

An aspect of the above method further comprises determining if the season is fully archived.

An aspect of the above method further comprises if the season is fully archived, providing the series view with two or more episodes with a first date order.

An aspect of the above method includes wherein the first date order is from first episode to last episode.

An aspect of the above method further comprises if the season is fully archived, providing the series view with two or more episodes with a second date order.

An aspect of the above method includes wherein the second date order is from most recent episode to oldest episode.

An aspect of the above method further comprises receiving a second selection of an episode.

An aspect of the above method further comprises playing the episode.

An intelligent television system comprising: a memory operable to store video-on-demand (VOD) content; a processor in communication with the memory, the processor operable to: execute a user interface application operable to: receive a filter criteria; provide a catalog view of one or more television series associated with the filter criteria; receive a selection of a television series from the catalog view; determine if the television series includes one season; and if there is only one season, provide a first digest view of the season.

An aspect of the above intelligent television system includes wherein the user interface application is further operable to, if there is more than one season, provide a second digest view having two or more seasons in date order, wherein the two or more seasons are ordered from most recent season to least recent season.

An aspect of the above intelligent television system includes wherein the user interface application is further operable to: determine if the season is fully archived; and if the season is fully archived provide the series view with two or more episodes with a first date order, wherein the first date order is from first episode to last episode.

An aspect of the above intelligent television system includes wherein the user interface application is further operable to, if the season is fully archived, provide the series view with two or more episodes with a second date order, wherein the second date order is from most recent episode to oldest episode.

An aspect of the above intelligent television system includes wherein the user interface application is further operable to: receive a second selection of an episode; and play the episode.

A computer readable medium having stored thereon processor executable instructions that cause a computing system to execute a method, the instructions comprising: instructions to receive a filter criteria; instructions to provide a catalog view of one or more television series associated with the filter criteria; instructions to receive a selection of a television series from the catalog view; instructions to determine if the television series includes one season; and if there is only one season, instructions to provide a first digest view of the season.

An aspect of the above computer readable medium further comprises instructions to if there is more than one season, provide a second digest view having two or more seasons in date order, wherein the two or more seasons are ordered from most recent season to least recent season.

An aspect of the above computer readable medium further comprises instructions to: determine if the season is fully archived; and if the season is fully archived provide the series view with two or more episodes with a first date order, wherein the first date order is from first episode to last episode.

An aspect of the above computer readable medium further comprises instructions to, if the season is fully archived, provide the series view with two or more episodes with a second date order, wherein the second date order is from most recent episode to oldest episode.

An aspect of the above computer readable medium further comprises instructions to: receive a second selection of an episode; and play the episode.

A method for providing one of two types of user interfaces in an intelligent television, the method comprising: receiving, by a processor of the intelligent television, a filter criteria; providing a catalog view of one or more television series associated with the filter criteria; receiving a selection of a television series from the catalog view; determining if the television series includes one season; if there is only one season, providing a first digest view of the season; receiving a second selection of an episode; and playing the episode in a series player including a user-selectable device to navigate to at least one of a next episode or a previous episode.

An aspect of the above method includes wherein the series player includes a playback control.

An aspect of the above method includes wherein the user-selectable device is associated with the playback control.

An aspect of the above method includes wherein the playback control is in a footer.

An aspect of the above method includes wherein a first user-selectable device for the previous episode is provided to a left of the playback control in the footer.

An aspect of the above method includes wherein a second user-selectable device for the next episode is provided to a right of the playback control in the footer.

An aspect of the above method includes wherein the playback control includes selections to rewind the episode, forward the episode, play the episode, and pause the episode.

An aspect of the above method includes wherein the first and second user-selectable devices include thumbnails representing the previous and next episode.

An aspect of the above method includes wherein the first and second user-selectable devices include names for the previous and next episode.

An aspect of the above method includes wherein selecting the first or second user-selectable devices begins a playback of the previous or next episode.

An intelligent television system comprising: a memory operable to store video-on-demand (VOD) content; a pro-

cessor in communication with the memory, the processor operable to: execute a user interface application operable to: receive, by a processor of the intelligent television, a filter criteria; provide a catalog view of one or more television series associated with the filter criteria; receive a selection of a television series from the catalog view; determine if the television series includes one season; if there is only one season, provide a first digest view of the season; receive a second selection of an episode; and play the episode in a series player including a user-selectable device to navigate to at least one of a next episode or a previous episode.

An aspect of the above intelligent television system includes wherein the series player includes a playback control, wherein the user-selectable device is associated with the playback control, and wherein the playback control is in a footer.

An aspect of the above intelligent television system includes wherein a first user-selectable device for the previous episode is provided to a left of the playback control in the footer, wherein a second user-selectable device for the next episode is provided to a right of the playback control in the footer, and wherein the playback control includes selections to rewind the episode, forward the episode, play the episode, and pause the episode.

An aspect of the above intelligent television system includes wherein the first and second user-selectable devices include thumbnails representing the previous and next episode, and wherein the first and second user-selectable devices include names for the previous and next episode.

An aspect of the above intelligent television system includes wherein selecting the first or second user-selectable devices begins a playback of the previous or next episode.

A computer readable medium having stored thereon processor executable instructions that cause a computing system to execute a method, the instructions comprising: instructions to receive, by a processor of the intelligent television, a filter criteria; instructions to provide a catalog view of one or more television series associated with the filter criteria; instructions to receive a selection of a television series from the catalog view; instructions to determine if the television series includes one season; if there is only one season, instructions to provide a first digest view of the season; instructions to receive a second selection of an episode; and instructions to play the episode in a series player including a user-selectable device to navigate to at least one of a next episode or a previous episode.

An aspect of the above computer readable medium includes wherein the series player includes a playback control, wherein the user-selectable device is associated with the playback control, and wherein the playback control is in a footer.

An aspect of the above computer readable medium includes wherein a first user-selectable device for the previous episode is provided to a left of the playback control in the footer, wherein a second user-selectable device for the next episode is provided to a right of the playback control in the footer, and wherein the playback control includes selections to rewind the episode, forward the episode, play the episode, and pause the episode.

An aspect of the above computer readable medium includes wherein the first and second user-selectable devices include thumbnails representing the previous and next episode, and wherein the first and second user-selectable devices include names for the previous and next episode.

An aspect of the above computer readable medium includes wherein selecting the first or second user-selectable devices begins a playback of the previous or next episode.

A method for providing video-on-demand (VOD) in an intelligent television, the method comprising: providing, by a processor of the intelligent television, a catalog view of two or more items of content; receiving a selection to sort the items of content based on a watched status; and providing a second catalog view where two or more items of content are presented, wherein the presented items of content have the selected watch status.

An aspect of the above method includes wherein the selection is made with a watched toggle.

An aspect of the above method includes wherein the watched status is a not watched status.

An aspect of the above method includes wherein the presented items of content have not been viewed.

An aspect of the above method includes wherein the watched status is a partially watched status.

An aspect of the above method includes wherein the presented items of content have been partially viewed.

An aspect of the above method includes wherein the watched status is a fully watched status.

An aspect of the above method includes wherein the presented items of content have been fully viewed.

An aspect of the above method includes wherein the watched toggle is associated with a hot button key in the catalog view and the second catalog view.

An aspect of the above method includes wherein the watched toggle is associated with a remote hot button key on a remote control.

An intelligent television system comprising: a memory operable to store video-on-demand (VOD) content; a processor in communication with the memory, the processor operable to: execute a user interface application operable to: provide a catalog view of two or more items of content; receive a selection to sort the items of content based on a watched status; and provide a second catalog view where two or more items of content are presented, wherein the presented items of content have the selected watch status.

An aspect of the above intelligent television system includes wherein the selection is made with a watched toggle, wherein the watched toggle is associated with a hot button key in the catalog view and the second catalog view, and wherein the watched toggle is associated with a remote hot button key on a remote control.

An aspect of the above intelligent television system includes wherein the watched status is a not watched status, and wherein the presented items of content have not been viewed.

An aspect of the above intelligent television system includes wherein the watched status is a partially watched status, and wherein the presented items of content have been partially viewed.

An aspect of the above intelligent television system includes wherein the watched status is a fully watched status, and wherein the presented items of content have been fully viewed.

A computer readable medium having stored thereon processor executable instructions that cause a computing system to execute a method, the instructions comprising: instructions to provide a catalog view of two or more items of content; instructions to receive a selection to sort the items of content based on a watched status; and instructions to provide a second catalog view where two or more items of content are presented, wherein the presented items of content have the selected watch status.

An aspect of the above computer readable medium includes wherein the selection is made with a watched toggle, wherein the watched toggle is associated with a hot

button key in the catalog view and the second catalog view, and wherein the watched toggle is associated with a remote hot button key on a remote control.

An aspect of the above computer readable medium includes wherein the watched status is a not watched status, and wherein the presented items of content have not been viewed.

An aspect of the above computer readable medium includes wherein the watched status is a partially watched status, and wherein the presented items of content have been partially viewed.

An aspect of the above computer readable medium includes wherein the watched status is a fully watched status, and wherein the presented items of content have been fully viewed.

A method for providing video-on-demand (VOD) in an intelligent television, the method comprising: providing, by a processor of the intelligent television, a catalog view for an item of content; receiving a selection to play content; determining if a user has previously watched the content; and if the user has previously watched the content, prompting the user if the user desires to resume watching the content.

An aspect of the above method further comprises if the user has not previously watched the content, playing the content from a beginning of the content.

An aspect of the above method includes wherein a watch status for the content is stored in a database.

An aspect of the above method includes wherein the intelligent television retrieves the watch status to determine if the user previously watched the content.

An aspect of the above method includes wherein the watch status is associated with the content in the database.

An aspect of the above method further comprises receiving a playback controls selection.

An aspect of the above method further comprises, in response to receiving the playback controls selection, providing the playback controls for a predetermined amount of time.

An aspect of the above method includes wherein the playback controls are in a footer.

An aspect of the above method includes wherein a first user-selectable device for the previous episode is provided to a left of the playback controls in the footer, wherein a second user-selectable device for the next episode is provided to a right of the playback controls in the footer.

An aspect of the above method includes wherein the playback controls includes selections to rewind the episode, forward the episode, play the episode, and pause the episode.

An intelligent television system comprising: a memory operable to store video-on-demand (VOD) content; a processor in communication with the memory, the processor operable to: execute a user interface application operable to: provide, by a processor of the intelligent television, a catalog view for an item of content; receive a selection to play content; determine if a user has previously watched the content; and if the user has previously watched the content, prompt the user if the user desires to resume watching the content.

An aspect of the above intelligent television system includes wherein the user interface application is further operable to, if the user has not previously watched the content, play the content from a beginning of the content.

An aspect of the above intelligent television system includes wherein a watch status for the content is stored in a database, wherein the intelligent television retrieves the watch status to determine if the user previously watched the content, and wherein the watch status is associated with the content in the database.

An aspect of the above intelligent television system includes wherein the user interface application is further operable to: receive a playback controls selection; and in response to receiving the playback controls selection, provide the playback controls for a predetermined amount of time.

An aspect of the above intelligent television system includes wherein the playback controls are in a footer, wherein a first user-selectable device for the previous content is provided to a left of the playback controls in the footer, wherein a second user-selectable device for the next content is provided to a right of the playback controls in the footer, and wherein the playback controls include selections to rewind the content, forward the content, play the content, and pause the content.

A computer readable medium having stored thereon processor executable instructions that cause a computing system to execute a method, the instructions comprising: instructions to provide, by a processor of the intelligent television, a catalog view for an item of content; receive a selection to play content; determine if a user has previously watched the content; and if the user has previously watched the content, prompt the user if the user desires to resume watching the content.

An aspect of the above computer readable medium includes wherein the user interface application is further operable to, if the user has not previously watched the content, play the content from a beginning of the content.

An aspect of the above computer readable medium includes wherein a watch status for the content is stored in a database, wherein the intelligent television retrieves the watch status to determine if the user previously watched the content, and wherein the watch status is associated with the content in the database.

An aspect of the above computer readable medium further comprises instructions to: receive a playback controls selection; and in response to receiving the playback controls selection, provide the playback controls for a predetermined amount of time.

An aspect of the above computer readable medium includes wherein the playback controls are in a footer, wherein a first user-selectable device for the previous content is provided to a left of the playback controls in the footer, wherein a second user-selectable device for the next content is provided to a right of the playback controls in the footer, and wherein the playback controls include selections to rewind the content, forward the content, play the content, and pause the content.

The systems and methods herein provide new user interfaces for providing VOD with the Intelligent TV. The user interfaces have an intuitive layout, structure, organization, and methodology. Thus, the user can more easily learn and navigate the options associated with VOD with the Intelligent TV.

The phrases “at least one”, “one or more”, and “and/or” are open-ended expressions that are both conjunctive and disjunctive in operation. For example, each of the expressions “at least one of A, B and C”, “at least one of A, B, or C”, “one or more of A, B, and C”, “one or more of A, B, or C” and “A, B, and/or C” means A alone, B alone, C alone, A and B together, A and C together, B and C together, or A, B and C together.

The term “a” or “an” entity refers to one or more of that entity. As such, the terms “a” (or “an”), “one or more” and

"at least one" can be used interchangeably herein. It is also to be noted that the terms "comprising", "including", and "having" can be used interchangeably.

The term "automatic" and variations thereof, as used herein, refers to any process or operation done without material human input when the process or operation is performed. However, a process or operation can be automatic, even though performance of the process or operation uses material or immaterial human input, if the input is received before performance of the process or operation. Human input is deemed to be material if such input influences how the process or operation will be performed. Human input that consents to the performance of the process or operation is not deemed to be "material."

A "blog" (a blend of the term web log) is a type of website or part of a website supposed to be updated with new content from time to time. Blogs are usually maintained by an individual with regular entries of commentary, descriptions of events, or other material such as graphics or video. Entries are commonly displayed in reverse-chronological order.

A "blogging service" is a blog-publishing service that allows private or multi-user blogs with time-stamped entries.

The term "cable TV" refers to a system of distributing television programs to subscribers via radio frequency (RF) signals transmitted through coaxial cables or light pulses through fiber-optic cables. This contrasts with traditional broadcast television (terrestrial television) in which the television signal is transmitted over the air by radio waves and received by a television antenna attached to the television.

The term "channel" or "television channel," as used herein, can be a physical or virtual channel over which a television station or television network is distributed. A physical channel in analog television can be an amount of bandwidth, typically 6, 7, or 8 MHz, that occupies a predetermine channel frequency. A virtual channel is a representation, in cable or satellite television, of a data stream for a particular television media provider (e.g., CDS, TNT, HBO, etc.).

The term "computer-readable medium," as used herein, refers to any tangible storage and/or transmission medium that participate in providing instructions to a processor for execution. Such a medium may take many forms, including but not limited to, non-volatile media, volatile media, and transmission media. Non-volatile media includes, for example, NVRAM, or magnetic or optical disks. Volatile media includes dynamic memory, such as main memory. Common forms of computer-readable media include, for example, a floppy disk, a flexible disk, hard disk, magnetic tape, or any other magnetic medium, magneto-optical medium, a CD-ROM, any other optical medium, punch cards, paper tape, any other physical medium with patterns of holes, a RAM, a PROM, and EPROM, a FLASH-EPROM, a solid state medium like a memory card, any other memory chip or cartridge, a carrier wave as described hereinafter, or any other medium from which a computer can read. A digital file attachment to e-mail or other self-contained information archive or set of archives is considered a distribution medium equivalent to a tangible storage medium. When the computer-readable media is configured as a database, it is to be understood that the database may be any type of database, such as relational, hierarchical, object-oriented, and/or the like. Accordingly, the disclosure is considered to include a tangible storage medium or distribution medium and prior art-recognized equivalents and successor media, in which the software implementations of the present disclosure are stored.

The term "enhanced television" (ETV) refers to a collection of specifications developed under the OpenCable project of CableLabs (Cable Television Laboratories, Inc.) that define an ETV Application consisting of resources (files) adhering to the Enhanced TV Binary Interchange Format (EBIF) content format as well as PNG images, JPEG images, and PFR downloadable fonts. An ETV application is normally delivered through an MPEG transport stream and accompanies an MPEG program containing video and audio elementary streams. An "ETV Application" is a collection of resources (files) that include one or more EBIF resources that represent viewable information in the form of pages. Two forms of a given ETV Application may be distinguished: (1) an interchange form and (2) an execution form. The interchange form of an ETV Application consists of the resources (files) that represent the compiled application prior to its actual execution by an ETV User Agent. The execution form of an ETV Application consists of the stored, and possibly mutated forms of these resources while being decoded, presented, and executed by an ETV User Agent. An "ETV User Agent" is a software component that operates on a set-top box, a television, or any other computing environment capable of receiving, decoding, presenting, and processing an ETV Application. This component usually provides, along with its host hardware environment, one or more mechanisms for an end-user to navigate and interact with the multimedia content represented by ETV Applications.

The term "high-definition television" (HDTV) provides a resolution that is substantially higher than that of standard-definition television. HDTV may be transmitted in various formats, namely 1080p-1920×1080p: 2,073,600 pixels (approximately 2.1 megapixels) per frame, 1080i (which is typically either 1920×1080i: 1,036,800 pixels (approximately 1 megapixel) per field or 2,073,600 pixels (approximately 2.1 megapixels) per frame or 1440×1080i:[1] 777, 600 pixels (approximately 0.8 megapixels) per field or 1,555,200 pixels (approximately 1.6 megapixels) per frame), or 720p-1280×720p: 921,600 pixels (approximately 0.9 megapixels) per frame. As will be appreciated, "frame size" in pixels is defined as number of horizontal pixels× number of vertical pixels, for example 1280×720 or 1920× 1080. Often the number of horizontal pixels is implied from context and is omitted, as in the case of 720p and 1080p, "scanning system" is identified with the letter "p" for progressive scanning or "i" for interlaced scanning, and "frame rate" is identified as number of video frames per second. For interlaced systems an alternative form of specifying number of fields per second is often used. For purposes of this disclosure, "high-definition television" is deemed to include other high-definition analog or digital video formats, including ultra high definition television.

The term "internet television" (otherwise known as Internet TV, Online Television, or Online TV) is the digital distribution of television content via the Internet. It should not be confused with Web television—short programs or videos created by a wide variety of companies and individuals, or Internet protocol television (IPTV)—an emerging internet technology standard for use by television broadcasters. Internet Television is a general term that covers the delivery of television shows and other video content over the internet by video streaming technology, typically by major traditional television broadcasters. It does not describe a technology used to deliver content (see Internet protocol television). Internet television has become very popular

through services such as RTE Player in Ireland; BBC iPlayer, 4oD, ITV Player (also STV Player and UTV Player) and Demand Five in the United Kingdom; Hulu in the United States; Nederland 24 in the Netherlands; ABC iview and Australia Live TV in Australia; Tivibu in Turkey; and iWanTV! in the Philippines.

The term "internet protocol television" (IPTV) refers to a system through which television services are delivered using the Internet protocol suite over a packet-switched network such as the Internet, instead of being delivered through traditional terrestrial, satellite signal, and cable television formats. IPTV services may be classified into three main groups, namely live television, with or without interactivity related to the current TV show; time-shifted television: catch-up TV (replays a TV show that was broadcast hours or days ago), start-over TV (replays the current TV show from its beginning); and video-on-demand (VOD): browse a catalog of videos, not related to TV programming. IPTV is distinguished from Internet television by its on-going standardization process (e.g., European Telecommunications Standards Institute) and preferential deployment scenarios in subscriber-based telecommunications networks with high-speed access channels into end-user premises via set-top boxes or other customer-premises equipment.

The term "silo," as used herein, can be a logical representation of an input, source, or application. An input can be a device or devices (e.g., DVD, VCR, etc.) electrically connected to the television through a port (e.g., HDMI, video/audio inputs, etc.) or through a network (e.g., LAN WAN, etc.). Rather than a device or devices, the input could be configured as an electrical or physical connection to one or more devices. A source, particularly a content source, can be a data service that provides content (e.g., a media center, a file system, etc.). An application can be a software service that provides a particular type of function (e.g., Live TV, VOD, User Applications, photograph display, etc.). The silo, as a logical representation, can have an associated definition or property, such as a setting, feature, or other characteristic.

The term "panel," as used herein, can mean a user interface displayed in at least a portion of the display. The panel may be interactive (e.g., accepts user input) or informational (e.g., does not accept user input). A panel may be translucent whereby the panel obscures but does not mask the underlying content being displayed in the display. Panels may be provided in response to a user input from a button or remote control interface.

The term "screen," as used herein, refers to a physical structure that includes one or more hardware components that provide the device with the ability to render a user interface and/or receive user input. A screen can encompass any combination of gesture capture region, a touch sensitive display, and/or a configurable area. The device can have one or more physical screens embedded in the hardware. However a screen may also include an external peripheral device that may be attached and detached from the device. In embodiments, multiple external devices may be attached to the device. For example, another screen may be included with a remote control unit that interfaces with the Intelligent TV.

The term "media" of "multimedia," as used herein, refers to content that may assume one of a combination of different content forms. Multimedia can include one or more of, but is not limited to, text, audio, still images, animation, video, or interactivity content forms.

The term "Intelligent TV," as used herein, refers to a television configured to provide one or more intuitive user interfaces and interactions based on a unique application platform and architecture. The Intelligent TV utilizes processing resources associated with the television to integrate Internet connectivity with parallel application functionality. This integration allows a user the ability to intuitively access various sources of media and content (e.g., Internet, over-the-top content, on-demand streaming media, over-the-air broadcast media, and/or other forms of information) via the Intelligent TV in a quick and efficient manner. The Intelligent TV can be a soft television. Although the Intelligent TV disclosed herein may comprise one or more components of a "smart TV," it is an aspect of the Intelligent TV to provide expanded intuitive user interaction capability for navigating and executing the various features of the television. A "smart TV," sometimes referred to as a connected TV, or hybrid TV (not to be confused with IPTV, Internet TV, or with Web TV), describes a trend of integration of the Internet and Web 2.0 features into television sets and set-top boxes, as well as the technological convergence between computers and these television sets/set-top boxes. The smart TV devices have a higher focus on online interactive media, Internet TV, over-the-top content, as well as on-demand streaming media, and less focus on traditional broadcast media than traditional television sets and set-top boxes. As can be appreciated, the Intelligent TV encompasses a broader range of technology than that of the smart TV defined above.

The term "television" is a telecommunication medium, device (or set) or set of associated devices, programming, and/or transmission for transmitting and receiving moving images that can be monochrome (black-and-white) or colored, with or without accompanying sound. Different countries use one of the three main video standards for TVs, namely PAL, NTSC or SECAM. Television is most commonly used for displaying broadcast television signals. The broadcast television system is typically disseminated via radio transmissions on designated channels in the 54-890 MHz frequency band. A common television set comprises multiple internal electronic circuits, including those for receiving and decoding broadcast signals. A visual display device which lacks a tuner is properly called a video monitor, rather than a television. A television may be different from other monitors or displays based on the distance maintained between the user and the television when the user watches the media and based on the inclusion of a tuner or other electronic circuit to receive the broadcast television signal.

The term "Live TV," as used herein, refers to a television production broadcast in real-time, as events happen, in the present.

The term "standard-definition television" (SDTV) is a television system that uses a resolution that is not considered to be either high-definition television (HDTV 720p and 1080p) or enhanced-definition television (EDTV 480p). The two common SDTV signal types are 576i, with 576 interlaced lines of resolution, derived from the European-developed PAL and SECAM systems; and 480i based on the American National Television System Committee NTSC system. In the US, digital SDTV is broadcast in the same 4:3 aspect ratio as NTSC signals. However, in other parts of the world that used the PAL or SECAM analog standards, standard-definition television is now usually shown with a 16:9 aspect ratio. Standards that support digital SDTV broadcast include DVB, ATSC and ISDB. Television signals are transmitted in digital form, and their pixels have a rectangular shape, as opposed to square pixels that are used in modern computer monitors and modern implementations of HDTV. The table below summarizes pixel aspect ratios for various kinds of SDTV video signal. Note that the actual

image (be it 4:3 or 16:9) is always contained in the center 704 horizontal pixels of the digital frame, regardless of how many horizontal pixels (704 or 720) are used. In case of digital video signal having 720 horizontal pixels, only the center 704 pixels contain actual 4:3 or 16:9 image, and the 8 pixel wide stripes from either side are called nominal analogue blanking and should be discarded before displaying the image. Nominal analogue blanking should not be confused with overscan, as overscan areas are part of the actual 4:3 or 16:9 image.

The term "video on demand (VOD)," or "video-on-demand," as used herein, refers to systems and processes which allow users to select and watch/listen to video or audio content on demand. VOD systems may stream content, to view the content in real time, or download the content to a storage medium for viewing at a later time.

The term "satellite positioning system receiver" refers to a wireless receiver or transceiver to receive and/or send location signals from and/or to a satellite positioning system, such as the Global Positioning System ("GPS") (US), GLONASS (Russia), Galileo positioning system (EU), Compass navigation system (China), and Regional Navigational Satellite System (India).

The term "display," as used herein, refers to at least a portion of a screen used to display the output of the television to a user. A display may be a single-screen display or a multi-screen display, referred to as a composite display. A composite display can encompass the touch sensitive display of one or more screens. A single physical screen can include multiple displays that are managed as separate logical displays. Thus, different content can be displayed on the separate displays although part of the same physical screen.

The term "displayed image," as used herein, refers to an image produced on the display. A typical displayed image is a television broadcast or menu. The displayed image may occupy all or a portion of the display.

The term "display orientation," as used herein, refers to the way in which a rectangular display is oriented by a user for viewing. The two most common types of display orientation are portrait and landscape. In landscape mode, the display is oriented such that the width of the display is greater than the height of the display (such as a 4:3 ratio, which is 4 units wide and 3 units tall, or a 16:9 ratio, which is 16 units wide and 9 units tall). Stated differently, the longer dimension of the display is oriented substantially horizontal in landscape mode while the shorter dimension of the display is oriented substantially vertical. In the portrait mode, by contrast, the display is oriented such that the width of the display is less than the height of the display. Stated differently, the shorter dimension of the display is oriented substantially horizontal in the portrait mode while the longer dimension of the display is oriented substantially vertical.

The term "module," as used herein, refers to any known or later developed hardware, software, firmware, artificial intelligence, fuzzy logic, or combination of hardware and software that is capable of performing the functionality associated with that element.

The terms "determine," "calculate" and "compute," and variations thereof, as used herein, are used interchangeably and include any type of methodology, process, mathematical operation or technique.

The term "touch screen" or "touchscreen" refer to screen that can receive user contact or other tactile input, such as a stylus. The touch screen may sense user contact in a number of different ways, such as by a change in an electrical parameter (e.g., resistance or capacitance), acoustic wave variations, infrared radiation proximity detection, light variation detection, and the like. In a resistive touch screen, for example, normally separated conductive and resistive metallic layers in the screen pass an electrical current. When a user touches the screen, the two layers make contact in the contacted location, whereby a change in electrical field is noted and the coordinates of the contacted location calculated. In a capacitive touch screen, a capacitive layer stores electrical charge, which is discharged to the user upon contact with the touch screen, causing a decrease in the charge of the capacitive layer. The decrease is measured, and the contacted location coordinates determined. In a surface acoustic wave touch screen, an acoustic wave is transmitted through the screen, and the acoustic wave is disturbed by user contact. A receiving transducer detects the user contact instance and determines the contacted location coordinates.

The term "web television" is original television content produced for broadcast via the World Wide Web. Some major distributors of web television are YouTube, Myspace, Newgrounds, Blip.tv, and Crackle.

The terms "instant message" and "instant messaging" refer to a form of real-time text communication between two or more people, typically based on typed text.

The term "internet search engine" refers to a web search engine designed to search for information on the World Wide Web and FTP servers. The search results are generally presented in a list of results often referred to as SERPS, or "search engine results pages". The information may consist of web pages, images, information and other types of files. Some search engines also mine data available in databases or open directories. Web search engines work by storing information about many web pages, which they retrieve from the html itself. These pages are retrieved by a Web crawler (sometimes also known as a spider)—an automated Web browser which follows every link on the site. The contents of each page are then analyzed to determine how it should be indexed (for example, words are extracted from the titles, headings, or special fields called meta tags). Data about web pages are stored in an index database for use in later queries. Some search engines, such as Google™, store all or part of the source page (referred to as a cache) as well as information about the web pages, whereas others, such as AltaVista™, store every word of every page they find.

The terms "online community", "e-community", or "virtual community" mean a group of people that primarily interact via a computer network, rather than face to face, for social, professional, educational or other purposes. The interaction can use a variety of media formats, including wikis, blogs, chat rooms, Internet forums, instant messaging, email, and other forms of electronic media. Many media formats are used in social software separately or in combination, including text-based chatrooms and forums that use voice, video text or avatars.

The term "remote control" refers to a component of an electronics device, most commonly a television set, DVD player and/or home theater system for operating the device wirelessly, typically from a short line-of-sight distance. Remote control normally uses infrared and/or radio frequency (RF) signaling and can include WiFi, wireless USB, Bluetooth™ connectivity, motion sensor enabled capabilities and/or voice control. A touchscreen remote control is a handheld remote control device which uses a touchscreen user interface to replace most of the hard, built-in physical buttons used in normal remote control devices.

The term "satellite TV" refers to television programming delivered by the means of communications satellites and received by an outdoor antenna, usually a parabolic reflector

generally referred to as a satellite dish, and as far as household usage is concerned, a satellite receiver either in the form of an external set-top box or a satellite tuner module built into a TV set.

The term "social network service" is a service provider that builds online communities of people, who share interests and/or activities, or who are interested in exploring the interests and activities of others. Most social network services are web-based and provide a variety of ways for users to interact, such as e-mail and instant messaging services.

The term "social network" refers to a web-based social network.

The term "gesture" refers to a user action that expresses an intended idea, action, meaning, result, and/or outcome. The user action can include manipulating a device (e.g., opening or closing a device, changing a device orientation, moving a trackball or wheel, etc.), movement of a body part in relation to the device, movement of an implement or tool in relation to the device, audio inputs, etc. A gesture may be made on a device (such as on the screen) or with the device to interact with the device.

The term "gesture capture" refers to a sense or otherwise a detection of an instance and/or type of user gesture. The gesture capture can occur in one or more areas of the screen. A gesture region can be on the display, where it may be referred to as a touch sensitive display or off the display where it may be referred to as a gesture capture area.

The term "electronic address" refers to any contactable address, including a telephone number, instant message handle, e-mail address, Universal Resource Locator (URL), Universal Resource Identifier (URI), Address of Record (AOR), electronic alias in a database, like addresses, and combinations thereof.

It shall be understood that the term "means," as used herein, shall be given its broadest possible interpretation in accordance with 35 U.S.C., Section 112(f). Accordingly, a claim incorporating the term "means" shall cover all structures, materials, or acts set forth herein, and all of the equivalents thereof. Further, the structures, materials or acts and the equivalents thereof shall include all those described in the summary of the invention, brief description of the drawings, detailed description, abstract, and claims themselves.

The term "social media" can refer to the means of interactions among people in which they create, share, and exchange information and ideas in virtual communities and networks. Embodiments of social media can include a group of Internet-based applications that allow the creation and exchange of content. Furthermore, social media may depend on mobile and web-based technologies to create highly interactive platforms through which individuals and communities share, co-create, discuss, and modify user-generated content. Social media differentiates from traditional/industrial media in many aspects such as quality, reach, frequency, usability, immediacy, and permanence.

The term "social media site" can refer to a social network or social network service.

The term "social media posting" can refer to an item of content or a provider of content on a social media site.

The term "social media poster" can refer to an author of an item of content or a provider of content on a social media site.

The term "social media pile" can refer to a user interface where each social media posters is represented by a thumbnail or other visual indicia. The social media pile can include two or more thumbnails or visual indicia formed into an arrangement that resembles a pile.

The preceding is a simplified summary of the disclosure to provide an understanding of some aspects of the disclosure. This summary is neither an extensive nor exhaustive overview of the disclosure and its various aspects, embodiments, and/or configurations. It is intended neither to identify key or critical elements of the disclosure nor to delineate the scope of the disclosure but to present selected concepts of the disclosure in a simplified form as an introduction to the more detailed description presented below. As will be appreciated, other aspects, embodiments, and/or configurations of the disclosure are possible utilizing, alone or in combination, one or more of the features set forth above or described in detail below.

BRIEF DESCRIPTION OF THE DRAWINGS

FIG. **1**A includes a first view of an embodiment of an environment of an intelligent television;

FIG. **1**B includes a second view of an embodiment of an environment of an intelligent television;

FIG. **2**A includes a first view of an embodiment of an intelligent television;

FIG. **2**B includes a second view of an embodiment of an intelligent television;

FIG. **2**C includes a third view of an embodiment of an intelligent television;

FIG. **2**D includes a fourth view of an embodiment of an intelligent television;

FIG. **3** is a block diagram of an embodiment of the hardware of an intelligent television;

FIG. **4** is a block diagram of an embodiment of the intelligent television software and/or firmware;

FIG. **5** is a second block diagram of an embodiment of the intelligent television software and/or firmware;

FIG. **6** is a third block diagram of an embodiment of the intelligent television software and/or firmware;

FIG. **7** is a plan view of an embodiment of a handheld remote control;

FIG. **8** is a side view of an embodiment of a remote control;

FIG. **9**A is a bottom view of an embodiment of a remote control with a joystick in a neutral position;

FIG. **9**B is a bottom view of an embodiment of a remote control with the joystick in a lower position;

FIG. **9**C is a bottom view of an embodiment of a remote control with the joystick in an upper position;

FIG. **10** is a plan view of another embodiment of a handheld remote control;

FIG. **11**A is a front view of an embodiment of an Intelligent TV screen;

FIG. **11**B is a front view of an embodiment of an Intelligent TV screen;

FIG. **11**C is a front view of an embodiment of an Intelligent TV screen;

FIG. **12** is a block diagram of an embodiment of a handheld remote control of either FIG. **7** or **10**;

FIG. **13** is a block diagram of an embodiment of a content data service;

FIG. **14** is a block diagram of an embodiment of a VOD content database for an Intelligent TV;

FIG. **15** is a flowchart view of an embodiment of a method for providing VOD in an Intelligent TV;

FIG. **16** is a flowchart view of an embodiment of a method for providing VOD in an Intelligent TV;

FIG. **17** is a view of an embodiment of a user interface for an Intelligent TV;

FIG. **18** is a view of an embodiment of a user interface for an Intelligent TV;

FIG. **19** is a view of an embodiment of a user interface for an Intelligent TV;

FIG. **20** is a flowchart view of an embodiment of a method for providing VOD in an Intelligent TV;

FIG. **21** is a view of an embodiment of a user interface for an Intelligent TV;

FIG. **22** is a view of an embodiment of a user interface for an Intelligent TV;

FIG. **23** is a view of an embodiment of a user interface for an Intelligent TV;

FIG. **24** is a view of an embodiment of a user interface for an Intelligent TV;

FIG. **25** is a view of an embodiment of a user interface for an Intelligent TV;

FIG. **26** is a flowchart view of an embodiment of a method for providing VOD in an Intelligent TV;

FIG. **27**A is a view of an embodiment of a user interface for an Intelligent TV;

FIG. **27**B is a view of an embodiment of a user interface for an Intelligent TV;

FIG. **27**C is a view of an embodiment of a user interface for an Intelligent TV;

FIG. **28** is a view of an embodiment of a user interface for an Intelligent TV;

FIG. **29** is a view of an embodiment of a user interface for an Intelligent TV;

FIG. **30** is a flowchart view of an embodiment of a method for providing VOD in an Intelligent TV;

FIG. **31** is a view of an embodiment of a user interface for an Intelligent TV;

FIG. **32** is a flowchart view of an embodiment of a method for providing VOD in an Intelligent TV;

FIG. **33** is a view of an embodiment of a user interface for an Intelligent TV;

FIG. **34** is a view of an embodiment of a user interface for an Intelligent TV;

FIG. **35** is a view of an embodiment of a user interface for an Intelligent TV;

FIG. **36** is a view of an embodiment of a user interface for an Intelligent TV;

FIG. **37** is a flowchart view of an embodiment of a method for providing VOD in an Intelligent TV;

FIG. **38** is a view of an embodiment of a user interface for an Intelligent TV; and

FIG. **39** is a flowchart view of an embodiment of a method for providing VOD in an Intelligent TV.

In the appended figures, similar components and/or features may have the same reference label. Further, various components of the same type may be distinguished by following the reference label by a letter that distinguishes among the similar components. If only the first reference label is used in the specification, the description is applicable to any one of the similar components having the same first reference label irrespective of the second reference label.

DETAILED DESCRIPTION

Presented herein are embodiments of a device. The device can be a network-enabled telecommunications device, such as a television, an electronic visual display device, or other smart device. The device can include one or more screens, or sections of a screen, that are configured to receive and present information from a number of sources. Further, the device can receive user input in unique ways. The overall design and functionality of the device provides for an enhanced user experience making the device more useful and more efficient.

Intelligent Television (TV) Environment:

Referring to FIGS. **1**A and **1**B, an Intelligent TV, or device, **100** is shown. It is anticipated that the Intelligent TV **100** may be used for entertainment, business applications, social interaction, content creation and/or consumption, and to organize and control one or more other devices that are in communication with the Intelligent TV **100**. As can be appreciated, the Intelligent TV **100** can be used to enhance the user interactive experience whether at home or at work.

In some embodiments, the Intelligent TV **100** may be configured to receive and understand a variety of user and/or device inputs. For example, a user may interface with the Intelligent TV **100** via one or more physical or electrical controls, such as buttons, switches, touch sensitive screens/regions (e.g., capacitive touch, resistive touch, etc.), and/or other controls associated with the Intelligent TV **100**. In some cases, the Intelligent TV **100** may include the one or more interactive controls. Additionally or alternatively, the one or more controls may be associated with a remote control. The remote control may communicate with the Intelligent TV **100** via wired and/or wireless signals. As can be appreciated, the remote control may operate via radio frequency (RF), infrared (IR), and/or a specific wireless communications protocol (e.g., Bluetooth™, Wi-Fi, etc.). In some cases, the controls, whether physical or electrical, may be configured (e.g., programmed) to suit a user's preferences.

Additionally or alternatively, smart phones, tablets, computers, laptops, netbooks, and other smart devices may be used to control the Intelligent TV **100**. For example, control of the Intelligent TV **100** may be achieved via an application running on a smart device. The application may be configured to present a user with various Intelligent TV **100** controls in an intuitive user interface (UI) on a screen associated with the device **100**. The screen may be a touch sensitive, or touch screen, display. Selections input by a user via the UI may be configured to control the Intelligent TV **100** by the application accessing one or more communication features associated with the smart device.

It is anticipated that the Intelligent TV **100** can receive input via various input devices including, but in no way limited to, video, audio, radio, light, tactile, and combinations thereof. Among other things, these input devices may be configured to allow the Intelligent TV **100** to see, recognize, and react to user gestures. For instance, a user may talk to the Intelligent TV **100** in a conversational manner. The Intelligent TV **100** may hear and understand voice commands in a manner similar to a smart device's intelligent personal assistant and voice-controlled navigator application (e.g., Apple's Siri, Android's Skyvi, Robin, Iris, and other applications).

The Intelligent TV **100** may also be a communications device which can establish network connections **104** through many alternate means, including wired **108** or wireless **112** means, over cellular networks **116** to connect via cellular base antenna **142** to telephone networks operated by telephone company **146**, and by using a telephone line **120** to connect to telephone networks operated by telephone company **146**. These connections **104** enable the Intelligent TV **100** to access one or more communication networks **132**. The communication networks may comprise any type of known communication medium or collection of communication media and may use any type of protocols to transport messages or signals between endpoints. The communication

networks may include wired and/or wireless communication technologies. The Internet is an example of a communication network **132** that constitutes an Internet Protocol (IP) network consisting of many computers, computing networks, and other communication devices located all over the world, which are connected through many telephone systems and other means.

Other examples of the communication network **132** include, without limitation, a standard Plain Old Telephone System (POTS), an Integrated Services Digital Network (ISDN), the Public Switched Telephone Network (PSTN), a Local Area Network (LAN), a Wide Area Network (WAN), a cellular network, and any other type of packet-switched or circuit-switched network known in the art. In addition, it can be appreciated that the communication network **132** need not be limited to any one network type, and instead may be comprised of a number of different networks and/or network types.

In some embodiments, the Intelligent TV **100** may be equipped with multiple communication means. The multiple communication means may allow the Intelligent TV **100** to communicate across Local Area Networks (LANs) **124**, wireless local area networks (WLANs) **128**, and other networks **132**. The networks **132** may be connected in a redundant manner to ensure network access. In other words, if one connection is interrupted, the Intelligent TV **100** can use an alternate communications path to reestablish and/or maintain the network connection **104**. Among other things, the Intelligent TV **100** may use these network connections **104** to send and receive information, interact with an electronic program guide (EPG) **136**, receive software updates **140**, contact customer service **144** (e.g., to receive help or service, etc.), and/or access remotely stored digital media libraries **148**. In addition, these connections can allow the Intelligent TV **100** to make phone calls, send and/or receive email messages, send and/or receive text messages (such as email and instant messages), surf the Internet using an internet search engine, post blogs by a blogging service, and connect/interact with social media sites and/or an online community (e.g., Facebook™, Twitter™, LinkedIn™, Pinterest™, Google+™, MySpace™, and the like) maintained by a social network service. In combination with other components of the Intelligent TV **100** described in more detail below, these network connections **104** also enable the Intelligent TV **100** to conduct video teleconferences, electronic meetings, and other communications. The intelligent TV **100** may capture and store images and sound, using associated cameras, microphones, and other sensors. Additionally or alternatively, the Intelligent TV **100** may create and save screen shots of media, images, and data displayed on a screen associated with the Intelligent TV **100**.

Further, as shown in FIG. **1**B, the Intelligent TV **100** can interact with other electronic devices **168** by either by the wired **108** and/or wireless **112** connections. As described herein, components of the Intelligent TV **100** allow the device **100** to be connected to devices **168** including, but not limited to, DVD players **168***a*, BluRay players **168***b*, portable digital media devices **168***c*, smart phones **168***d*, tablet devices **168***e*, personal computers **168***f*, external cable boxes **168***g*, keyboards **168***h*, pointing devices **168***i*, printers **168***j*, game controllers and/or game pads **168***k*, satellite dishes **168***l*, external display devices **168***m*, and other universal serial bus (USB), local area network (LAN), Bluetooth™, or high-definition multimedia interface (HDMI) compliant devices, and/or wireless devices. When connected to an external cable box **168***g* or satellite dish **168***l*, the Intelligent TV **100** can access additional media content. Also, as further described below, the Intelligent TV **100** is capable of receiving digital and/or analog signals broadcast by TV stations. The Intelligent TV **100** can be configured as one or more of a standard-definition television, enhanced television, and high-definition television. It may operate as one or more of cable, Internet, Internet Protocol, satellite, web, and/or smart television. The Intelligent TV **100** may also be used to control the operation of, and may interface with, other smart components such as security systems **172**, door/gate controllers **176**, remote video cameras **180**, lighting systems **184**, thermostats **188**, refrigerators **192**, and other appliances.

Intelligent TV:

FIGS. **2**A-**2**D illustrate components of the Intelligent TV **100**. In general, as shown by FIG. **2**A, the Intelligent TV **100** can be supported by a removable base or stand **204** that is attached to a frame **208**. The frame **208** surrounds edges of a display screen **212**, leaving a front surface of the display screen **212** uncovered. The display screen **212** may comprise a. Liquid Crystal Display (LCD) screen, a plasma screen, Light Emitting Diode (LED) screen, or other screen types. In embodiments, the entire front surface of the screen **212** may be touch sensitive and capable of receiving input by the user touching the front surface of the screen **212**.

The Intelligent TV **100** may include integrated speakers **216** and at least one microphone **220**. A first area of the frame **208** may comprise a horizontal gesture capture region **224** and second areas comprise vertical gesture capture regions **228**. The gesture capture regions **224**, **228** may comprise areas or regions that are capable of receiving input by recognizing gestures made by the user, and in some examples, without the need for the user to actually touch the screen **212** surface of the Intelligent TV **100**. However, the gesture capture regions **224**, **228** may not include pixels that can perform a display function or capability.

One or more image capture devices **232**, such as a camera, can be included for capturing still and/or video images. The image capture device **232** can include or be associated with additional elements, such as a flash or other light source **236** and a range finding device **240** to assist focusing of the image capture device. In addition, the microphone **220**, gesture capture regions **224**, **228**, image capture devices **232**, and the range finding device **240** may be used by the Intelligent TV **100** to recognize individual users. Additionally or alternatively, the Intelligent TV **100** may learn and remember preferences associated with the individual users. In some embodiments, the learning and remembering (i.e., identifying and recalling stored information) may be associated with the recognition of a user.

An IR transmitter and receiver **244** may also be provided to connect the Intelligent TV **100** with a remote control device (not shown) or other IR devices. Additionally or alternatively, the remote control device may transmit wireless signals via RF, light, and/or a means other than IR. Also shown in FIG. **2**A is an audio jack **248**, which may be hidden behind a panel that is hinged or removable. The audio jack **248** accommodates a tip, ring, sleeve (TRS) connector, for example, to allow the user to utilize headphones, a headset, or other external audio equipment.

The Intelligent TV **100** can also include a number of buttons **252**. For example, FIG. **2**A illustrates the buttons **252** on the top of the Intelligent TV **100**, although the buttons could be placed at other locations. As shown, the Intelligent TV **100** includes six buttons **252***a-f*, which can be configured for specific inputs. For example, the first button **252***a* may be configured as an on/off button used to control overall system power to the Intelligent TV **100**. The buttons

252 may be configured to, in combination or alone, control a number of aspects of the Intelligent TV **100**. Some non-limiting examples include, but are not limited to, overall system volume, brightness, the image capture device, the microphone, and initiation/termination of a video conference. Instead of separate buttons, two of the buttons may be combined into a rocker button. This rocker button arrangement may be useful in situations where the buttons are configured to control features such as volume or brightness. In some embodiments, one or more of the buttons **252** are capable of supporting different user commands. By way of example, a normal press has a duration commonly of less than about 1 second and resembles a quick input. A medium press has a duration commonly of 1 second or more but less than about 12 seconds. A long press has a duration commonly of about 12 seconds or more. The function of the buttons is normally specific to the application that is active on the Intelligent TV **100**. In the video conference application for instance and depending on the particular button, a normal, medium, or long press can mean end the video conference, increase or decrease the volume, increase a rate speed associated with a response to an input, and toggle microphone mute. Depending on the particular button, a normal, medium, or long press can also control the image capture device **232** to increase zoom, decrease zoom, take a photograph, or record video.

In support of communications functions or capabilities, the Intelligent TV **100** can include one or more shared or dedicated antennae **256** and wired broadband connections **260** as shown in FIG. **2**B. The antennae **256** also enable the Intelligent TV **100** to receive digital and/or analog broadcast TV channels. The wired broadband connections **260** are, for example, a Digital Subscriber Line (DSL), an optical line, an Ethernet port, an IEEE 1394 interface, or other interfaces. The Intelligent TV **100** also has a telephone line jack **262** to further provide communications capability.

In addition to the removable base **204**, the Intelligent TV **100** may include hardware and mounting points **264** on a rear surface to facilitate mounting the Intelligent TV **100** to a surface, such as a wall. In one non-limiting example, the Intelligent TV **100** may incorporate at least one Video Equipment Standards Association (VESA) mounting interface for attaching the device **100** to the surface.

As shown in FIG. **2**C, the Intelligent TV **100** may include docking interfaces or ports **268**. The docking ports **268** may include proprietary or universal ports to support the interconnection of the Intelligent TV **100** to other devices or components, which may or may not include additional or different capabilities from those integral to the Intelligent TV **100**. In addition to supporting an exchange of communication signals between the Intelligent TV **100** and a connected device or component, the docking ports **268** can support the supply of power to the connected device or component. The docking ports **268** can also comprise an intelligent element that comprises a docking module for controlling communications or other interactions between the Intelligent TV **100** and the connected device or component.

The Intelligent TV **100** also includes a number of card slots **272** and network or peripheral interface ports **276**. The card slots **272** may accommodate different types of cards including subscriber identity modules (SIM), secure digital (SD) cards, MiniSD cards, flash memory cards, and other cards. Ports **276** in embodiments may include input/output (I/O) ports, such as universal serial bus (USB) ports, parallel ports, game ports, and high-definition multimedia interface (HDMI) connectors.

An audio/video (A/V) I/O module **280** can be included to provide audio to an interconnected speaker or other device, and to receive audio input from a connected microphone or other device. As an example, the audio input/output interface **280** may comprise an associated amplifier and analog-to-digital converter.

Hardware Features:

FIG. **3** illustrates components of a Intelligent TV **100** in accordance with embodiments of the present disclosure. In general, the Intelligent TV **100** includes a primary screen **304**. Screen **304** can be a touch sensitive screen and can include different operative areas.

For example, a first operative area, within the screen **304**, may comprise a display **310**. In some embodiments, the display **310** may be touch sensitive. In general, the display **310** may comprise a full color, display.

A second area within the screen **304** may comprise a gesture capture region **320**. The gesture capture region **320** may comprise an area or region that is outside of the display **310** area, and that is capable of receiving input, for example in the form of gestures provided by a user. However, the gesture capture region **320** does not include pixels that can perform a display function or capability.

A third region of the screen **304** may comprise a configurable area **312**. The configurable area **312** is capable of receiving input and has display or limited display capabilities. In embodiments, the configurable area **312** may present different input options to the user. For example, the configurable area **312** may display buttons or other relatable items. Moreover, the identity of displayed buttons, or whether any buttons are displayed at all within the configurable area **312** of a screen **304**, may be determined from the context in which the Intelligent TV **100** is used and/or operated.

In an exemplary touch sensitive screen **304** embodiment, the touch sensitive screen **304** comprises a liquid crystal display extending across at least those regions of the touch sensitive screen **304** that are capable of providing visual output to a user, and a capacitive input matrix over those regions of the touch sensitive screen **304** that are capable of receiving input from the user.

One or more display controllers **316** may be provided for controlling the operation of the screen **304**. The display controller **316** may control the operation of the touch sensitive screen **304**, including input (touch sensing) and output (display) functions. The display controller **316** may also control the operation of the screen **304** and may interface with other inputs, such as infrared and/or radio input signals (e.g., door/gate controllers, alarm system components, etc.). In accordance with still other embodiments, the functions of a display controller **316** may be incorporated into other components, such as a processor **364**.

The processor **364** may comprise a general purpose programmable processor or controller for executing application programming or instructions. In accordance with at least some embodiments, the processor **364** may include multiple processor cores, and/or implement multiple virtual processors. In accordance with still other embodiments, the processor **364** may include multiple physical processors. As a particular example, the processor **364** may comprise a specially configured application specific integrated circuit (ASIC) or other integrated circuit, a digital signal processor, a controller, a hardwired electronic or logic circuit, a programmable logic device or gate array, a special purpose computer, or the like. The processor **364** generally functions to run programming code or instructions implementing various functions of the Intelligent TV **100**.

In support of connectivity functions or capabilities, the Intelligent TV **100** can include a module for encoding/decoding and/or compression/decompression **366** for receiving and managing digital television information. Encoding/decoding compression/decompression module **366** enables decompression and/or decoding of analog and/or digital information dispatched by a public television chain or in a private television network and received across antenna **324**, I/O module **348**, wireless connectivity module **328**, and/or other wireless communications module **332**. The television information may be sent to screen **304** and/or attached speakers receiving analog or digital reception signals. Any encoding/decoding and compression/decompression is performable on the basis of various formats (e.g., audio, video, and data). Encrypting module **368** is in communication with encoding/decoding compression/decompression module **366** and enables the confidentiality of all the data received or transmitted by the user or supplier.

In support of communications functions or capabilities, the Intelligent TV **100** can include a wireless connectivity module **328**. As examples, the wireless connectivity module **328** can comprise a GSM, CDMA, FDMA and/or analog cellular telephony transceiver capable of supporting voice, multimedia and/or data transfers over a cellular network. Alternatively or in addition, the Intelligent TV **100** can include an additional or other wireless communications module **332**. As examples, the other wireless communications module **332** can comprise a Wi-Fi, Blutooth™, WiMax, infrared, or other wireless communications link. The wireless connectivity module **328** and the other wireless communications module **332** can each be associated with a shared or a dedicated antenna **324** and a shared or dedicated I/O module **348**.

An input/output module **348** and associated ports may be included to support communications over wired networks or links, for example with other communication devices, server devices, and/or peripheral devices. Examples of an input/output module **348** include an Ethernet port, a Universal Serial Bus (USB) port, Thunderbolt™ or Light Peak interface, Institute of Electrical and Electronics Engineers (IEEE) 1394 port, or other interface.

An audio input/output interface/device(s) **344** can be included to provide analog audio to an interconnected speaker or other device, and to receive analog audio input from a connected microphone or other device. As an example, the audio input/output interface/device(s) **344** may comprise an associated amplifier and analog-to-digital converter. Alternatively or in addition, the Intelligent TV **100** can include an integrated audio input/output device **356** and/or an audio jack for interconnecting an external speaker or microphone. For example, an integrated speaker and an integrated microphone can be provided, to support near talk or speaker phone operations.

A port interface **352** may be included. The port interface **352** may include proprietary or universal ports to support the interconnection of the device **100** to other devices or components, such as a dock, which may or may not include additional or different capabilities from those integral to the device **100**. In addition to supporting an exchange of communication signals between the device **100** and another device or component, the docking port **136** and/or port interface **352** can support the supply of power to or from the device **100**. The port interface **352** also comprises an intelligent element that comprises a docking module for controlling communications or other interactions between the Intelligent TV **100** and a connected device or component. The docking module may interface with software applications that allow for the remote control of other devices or components (e.g., media centers, media players, and computer systems).

An Intelligent TV **100** may also include memory **308** for use in connection with the execution of application programming or instructions by the processor **364**, and for the temporary or long term storage of program instructions and/or data. As examples, the memory **308** may comprise RAM, DRAM, SDRAM, or other solid state memory. Alternatively or in addition, data storage **314** may be provided. Like the memory **308**, the data storage **314** may comprise a solid state memory device or devices. Alternatively or in addition, the data storage **314** may comprise a hard disk drive or other random access memory.

Hardware buttons **358** can be included for example for use in connection with certain control operations. One or more image capture interfaces/devices **340**, such as a camera, can be included for capturing still and/or video images. Alternatively or in addition, an image capture interface/device **340** can include a scanner, code reader, or motion sensor. An image capture interface/device **340** can include or be associated with additional elements, such as a flash or other light source. The image capture interfaces/devices **340** may interface with a user ID module **350** that assists in identifying users of the Intelligent TV **100**.

The Intelligent TV **100** can also include a global positioning system (GPS) receiver **336**. In accordance with embodiments of the present invention, the GPS receiver **336** may further comprise a GPS module that is capable of providing absolute location information to other components of the Intelligent TV **100**. As will be appreciated, other satellite-positioning system receivers can be used in lieu of or in addition to GPS.

Power can be supplied to the components of the Intelligent TV **100** from a power source and/or power control module **360**. The power control module **360** can, for example, include a battery, an AC-to-DC converter, power control logic, and/or ports for interconnecting the Intelligent TV **100** to an external source of power.

Communication between components of the Intelligent TV **100** is provided by bus **322**. Bus **322** may comprise one or more physical buses for control, addressing, and/or data transmission. Bus **322** may be parallel, serial, a hybrid thereof, or other technology.

Firmware and Software:

An embodiment of the software system components and modules **400** is shown in FIG. **4**. The software system **400** may comprise one or more layers including, but not limited to, an operating system kernel **404**, one or more libraries **408**, an application framework **412**, and one or more applications **416**. The one or more layers **404-416** can communicate with each other to perform functions for the Intelligent TV **100**.

An operating system (OS) kernel **404** contains the primary functions that allow the software to interact with hardware associated with the Intelligent TV **100**. Kernel **404** can include a collection of software that manages the computer hardware resources and provides services for other computer programs or software code. The operating system kernel **404** is the main component of the operating system and acts as an intermediary between the applications and data processing done with the hardware components. Part of the operating system kernel **404** can include one or more device drivers **420**. A device driver **420** can be any code within the operating system that helps operate or control a device or hardware attached to or associated with the Intelligent TV. The driver **420** can include code for operating

video, audio, and/or other multimedia components of the Intelligent TV **100**. Examples of drivers include display, camera, flash, binder (IPC), keypad, WiFi, and audio drivers.

Library **408** can contain code or other components that may be accessed and implemented during the operation of the software system **400**. The library **408** may contain one or more of, but is not limited to, an operating system runtime library **424**, a TV services hardware abstraction layer (HAL) library **428**, and/or a data service library **432**. The OS runtime library **424** may contain the code required by the operating system kernel **404** or other operating system functions to be executed during the runtime of the software system **400**. The library can include the code that is initiated during the running of the software system **400**.

The TV services hardware abstraction layer library **428** can include code required by TV services either executed in the application framework **412** or an application **416**. The TV services HAL library **428** is specific to the Intelligent TV **100** operations that control different functions of the Intelligent TV. The TV service HAL library **428** can also be formed from other types of application languages or embodiments of different types of code or formats for code beyond the hardware abstraction layer.

The data services library **432** can include the one or more components or codes to implement components for the data services function. The data services function can be implemented in the application framework **412** and/or applications layer **416**. An embodiment of a function of the data services and the type of components that may be included is shown in FIG. **6**.

The application framework **412** can include a general abstraction for providing functionality that can be selected by one or more applications **416** to provide specific application functions or software for those applications. Thus, the framework **412** can include one or more different services, or other applications, that can be accessed by the applications **416** to provide general functions across two or more applications. Such functions include, for example, management of one or more of windows or panels, surfaces, activities, content, and resources, The application framework **412** can include one or more, but is not limited to, TV services **434**, TV services framework **440**, TV resources **444**, and user interface components **448**.

The TV services framework **440** can provide an additional abstraction for different TV services. TV services framework **440** allows for the general access and function of services that are associated with the TV functionality. The TV services **436** are general services provided within the TV services framework **440** that can be accessed by applications in the applications layer **416**. The TV resources **444** provide code for accessing TV resources **444** including any type of storage, video, audio, or other functionality provided with the Intelligent TV **100**. The TV resources **444**, TV services **436**, and TV services framework **440** provide for the different implementations of TV functionality that may occur with the Intelligent TV **100**.

One or more user interface components **448** can provide general components for display of the Intelligent TV **100**. The user interface components **448** might be general components that may be accessed by different applications provided in the application framework **412**. The user interface components **448** may be accessed to provide for panels and silos as described in conjunction with FIG. **5**.

The applications layer **416** can both contain and execute applications associated with the Intelligent TV **100**. Applications layer **416** may include one or more of, but is not limited to, a live TV application **452**, a VOD application **456**, a media center application **460**, an application center application **464**, and a user interface application **468**. The live TV application **452** can provide live TV over different signal sources. For example, the live TV application **452** can provide TV from input from cable television, over air broadcasts, from satellite services, or other types of live TV services. Live TV application **452** may then present the multimedia presentation or video and audio presentation of the live television signal over the display of the Intelligent TV **100**.

The VOD application **456** can provide for video from different storage sources. Unlike Live TV application **452**, VOD **456** provides for display of videos that are accessed from some memory source. The sources of the VOD can be associated with users or with the Intelligent TV or some other type of service. For example, the VOD **456** may be provided from an iTunes library stored in a cloud, from a local disc storage that contains stored video programs, or from some other source.

The media center application **460** can provide applications for different types of media presentation. For example, the media center **460** can provide for displaying pictures or audio that is different from, but still accessible by the user and different from live TV or VOD. The media center **460** allows for the access of different sources to obtain the media in the display of such media on the Intelligent TV **100**.

The application center **464** allows for the provision, storage and use of applications. An application can be a game, a productivity application, or some other application generally associated with computer systems or other devices, but may be operated within the Intelligent TV. An application center **464** may obtain these applications from different sources, store them locally and then execute those types of applications for the user on the Intelligent TV **100**.

User interface application **468** provides for the specific user interfaces associated with the Intelligent TV **100**. These user interfaces can include the silos and panels that are described in FIG. **5**. An embodiment of the user interface software **500** is shown in FIG. **5**. In one non-limiting example the application framework **412** contains one or more code components which help control the user interface events while one or more applications in the applications layer **416** affects the user interface use for the Intelligent TV **100**. The application framework **412** can include a silo transition controller **504** and/or an input event dispatcher **508**. There may be more or fewer code components in the application framework **412** than those shown in FIG. **5**. The silo transition controller **504** contains the code and language that manages the transitions between one or more silos. A silo can be a vertical user interface feature on the Intelligent TV that contains information for user. The transition controller **504** can manage the changes between two silos when an event occurs in the user interface. The input event dispatcher **508** can receive user interface events that may be received from the operating system and provided to the input event dispatcher **508**. These events can include selections of buttons on a remote control or on the TV or other types of user interface inputs. The input event dispatcher **508** may then send these events to a silo manager **532** or panel manager **536** depending on the type of the event. The silo transition controller **504** can interface with the silo manager **532** to affect changes in the silos.

The applications layer **416** can include a user interface application **468** and/or a silo application **512**. The applications layer **416** can include more or fewer user interface applications as necessary to control the user interface of the Intelligent TV **100** than those shown in FIG. **5**. The user

interface application **468** can include a silo manager **532**, a panel manager **536**, and one or more types of panels **516-528**. The silo manager **532** manages the display and/or features of silos. The silo manager **532** can receive or send information from the silo transition controller **504** or the input event dispatcher **508** to change the silos displayed and/or to determine types of input received in the silos.

A panel manager **536** is operable to display panels in the user interface to manage transitions between those panels or to affect user interface inputs received in the panel. The panel manager **536** may thus be in communication with different user interface panels such as a global panel **516**, a volume panel **520**, a settings panel **524**, and/or a notification panel **528**. The panel manager **536** can display these types of panels depending on the inputs received from the input event dispatcher **508**. The global panel **516** may include information that is associated with the home screen or top level hierarchal information for the user. A volume panel **520** may display information about an audio volume control or other settings for volume. A settings panel **524** can include information displayed about the settings of the audio or video, or other settable characteristics of the Intelligent TV **100**. A notification panel **528** can provide information about notifications to a user. These notifications can be associated with information, such as, VOD displays, favorites, currently provided programs, or other information. Notifications can be associated with the media or with some type of setting, or operation or the Intelligent TV **100**. The panel manager **536** may be in communication with the panel controller **552** of the silo application **512**.

The panel controller **552** may operate to control portions of the panels of the types described previously. Thus, the panel controller **552** may be in communication with a top panel application **540**, an application panel **544**, and/or bottom panel **548**. These types of panels may be differently displayed in the user interface of the Intelligent TV **100**. The panel control thus may be based on the configuration of the system or the type of display being used currently, put the types of panels **516-528** into a certain display orientation governed by the top panel application **540**, application panel **544**, or bottom panel application **548**.

An embodiment of the data service **432** and the operation of the data management is shown in FIG. **6**. The data management **600** can include one or more code components that are associated with different types of data. For example, there may be code components within the data service **432** that execute and are associated with VOD, the electronic program guide, or media data. There may be more or fewer types of data service **432** components than those shown in FIG. **6**. Each of the different types of data may include a data model **604-612**. The data models govern what information is to be stored and how that information will be stored by the data service. Thus, the data model can govern regardless of where the data comes from, how the data will be received or managed within the Intelligent TV system. Thus, the data model **604**, **608**, and/or **612**, can provide a translation ability or affect the ability to translate data from one form to another to be used by the Intelligent TV **100**.

The different types of data services (VOD, electronic programming guide, media) each have a data subservice **620**, **624**, and/or **628** that is in communication with one or more internal and/or external content providers **616**. The data subservices **620**, **624**, and **628** that communicate with the content providers **616** to obtain data that may then be stored in databases **632**, **636**, and **640**. The subservices **620**, **624**, and **628** may communicate with and initiate or enable one or more source plug-ins **644**, **648**, and **652** to communicate with the content provider. For each content provider **616**, there may be a different source plug-in **644**, **648**, and **652**. Thus, if there is more than one source of content for the data, each of the data subservices **620**, **624**, and **628** may determine and then enable or initiate a different source plug-in **644**, **648**, and/or **652**. The content providers **616** may also provide information to a resource arbitrator **656** and/or thumbnail cache manager **660**. The resource arbitrator **656** may operate to communicate with resources **664** that are external to the data service **432**. Thus, the resource arbitrator **656** may communicate with cloud based storage, network based storage, or other types of external storage in the resources **664**. This information may then be provided through the content provider module **616** to the data subservices **620**, **624**, **628**. Likewise, a thumbnail cache manager **660** may obtain thumbnail information from one of the data subservices **620**, **624**, **628** and store that information in the thumbnails database **668**. Further, the thumbnail cache manager **660** may extract or retrieve that information from the thumbnails database **668** to provide to one of the data subservices **620**, **624**, **628**.

An exemplary content aggregation architecture **1300** is shown in FIG. **13**. The architecture can include a user interface layer **1304** and a content aggregation layer **1308**. The user interface layer **1304** may include a TV application **1312**, media player **1316**, and application(s) **1320**. The TV application **1312** enables the viewer to view channels received via an appropriate transmission medium, such as cable, satellite, and/or the Internet. The media player **1316** views other types of media received via an appropriate transmission medium, such as the Internet. The application (s) **1320** include other TV-related (pre-installed) applications, such as content viewing, content searching, device viewing, and setup algorithms, and coordinates with the media player **1316** to provide information to the viewer.

The content source layer **1308** includes, as data services, a content source service **1328**, a content aggregation service **1332** and a content presentation service **1336**. The content source service **1328** can manage content source investigators, including local and/or network file system(s), digital network device manager (which discovers handheld and non-handheld devices (e.g., digital media servers, players, renderers, controllers, printers, uploaders, downloaders, network connectivity functions, and interoperability units) by known techniques, such as a multicast universal plug and play or UPnP discovery techniques, and, for each discovered device, retrieves, parses, and encodes device descriptors, notifies the content source service of the newly discovered device, and provides information, such as an index, on previously discovered devices), Internet Protocol Television or IPTV, digital television or DTV (including high definition and enhanced TV), third party services (such as those referenced above), and applications (such as Android applications).

Content source investigators can track content sources and are typically configured as binaries. The content source service **1328** starts content source investigators and maintains open and persistent channels for communications. The communications include query or command and response pairs. The content aggregation service **1332** can manage content metadata fetchers, such as for video, audio, and/or picture metadata. The content presentation service **1336** may provide interfaces to the content index **1340**, such as an Android application interface and digital device interfaces.

The content source service **1328** can send and receive communications **1344** to and from the content aggregation service **1332**. The communications can include notifications

regarding new and removed digital devices and/or content and search queries and results. The content aggregation service **1332** can send and receive communications **1348** to and from the content presentation service **1336** including device and/or content lookup notifications, content-of-interest advisories and notifications, and search queries and results.

When a search is performed, particularly when the user is searching or browsing content, a user request may be received from the user interface layer **1300**, by the content presentation service **1336**, which responsively opens a socket and sends the request to the content aggregation service **1332**. The content aggregation service **1332** first returns results from the local database **1340**. The local database **1340** includes an index or data model and indexed metadata. The content source service **1328** further issues search and browse requests for all content source investigators and other data management systems. The results are forwarded to the content aggregation service **1332**, which updates the database **1340** to reflect the further search results and provides the original content aggregation database search results and the data updates, reflecting the additional content source service search results, over the previously opened socket to the content presentation service **1336**. The content presentation service **1336** then provides the results to one or more components in the user interface layer **1300** for presentation to the viewer. When the search session is over (e.g., the search session is terminated by the user or by an action associated with user), the user interface layer **1300** disconnects the socket. As shown, media can be provided directly by the content aggregation service **1332** to the media player **1316** for presentation to the user.

Remote Control:

A handheld remote control can be provided to enable user interaction with the Intelligent TV **100**. An exemplary handheld remote control is shown in FIGS. **7-9**. The remote control **700** can include one or more of, but is not limited to, top, side and bottom housings **704**, **708**, and **712**, an (on/off) power button **716**, an input source button **720** (to select input source such as Live TV, VOD, media center, application center, high definition multimedia interface or HDMI, component or COMP, audio/Video or A/V, digital or analog television or DTV/ATV, and video graphics array (VGA)), a (volume) mute button **724**, a Live TV button **728** (to activate or select the Live TV silo), a VOD (VOD) button **732** (to activate or select the VOD silo), a media center button **736** (to activate or select the media center application or silo, which access various types of media such as music, TV programming, videos, and the like), an application center button **740** (to activate or select the application center application or silo), a global panel button **744**, an application panel button **748**, a back button **752** (to select a prior user operation or Intelligent TV state and/or navigate up a hierarchy of any displayed image or object(s) (in which case the back button **752** does not navigate within application panels or across application silos), a play button **756** (to play or pause media), a D-pad **760** (which includes north, east, west, and south directional arrows to navigate among displayed images and/or move between levels of an application's or object's hierarchy such as application view navigation, panel navigation, and collection navigation), an OK (or select) button **764** (to select a highlighted displayed image (such as displayed speed control, rewind, forward, play, and pause objects and/or objects on menu bar or in a menu box) and/or navigate down a hierarchy of any displayed image or object(s)), a rocker-type volume-up and volume-down button **768** (to adjust the volume), a menu/guide button **772** (to select for display a menu or guide of programming), a 0-9 (number) button **776** (to display a number pad on the TV screen), a settings button **780** (which launches an application to access current and change TV settings (such as channel settings and settings used to adjust picture and sound effects (e.g., image mode (e.g., standard, playground, game, cinema, concert, and studio), brightness, contrast, saturation, color temperature, energy savings, 3D noise reduction, hue, sharpness, zoom mode (e.g., full screen, standard, smart zoom, and dot-to-dot), picture position, 3D mode, for picture, and sound retrieval system or SRS TruSurround, sound mode (e.g., standard, live 1, live 2, theatre, music, speech, user equalizer mode, Left/Right speaker balance, auto volume control, Sony/Philips Interconnect Format or S/PDIF (off, auto, pulse code modulation or PCM) for sound) and system settings (such as system (e.g., selected language for graphical user interface, user geographical and/or geopolitical location information, input method, area settings, and sleep time), network (e.g., WiFi, WiFi hotspot, WiFi direct, Point-to-Point Protocol over Ethernet or PPPoE (asymmetric digital subscriber line or ADSL), Ethernet) settings (e.g., enabled and disabled and selected and non-selected) and information (e.g., network information (e.g., electronic address such as Internet Protocol or IP address, subnet mask, gateway, domain name server information, domain name, Media Access Control or MAC address, service set identification or SSID, security information, and password information) and inline status), manage applications (e.g., currently installed applications, currently executing applications, and internal and external computer readable medium usage), and view user information regarding the Intelligent TV **100**)), a rocker-type channel-up and channel-down button **784** (to increment or decrement the selected channel), and first, second, third and fourth hotkeys **788**, **792**, **794**, and **796**, and/or a moveable joystick **900** on a bottom of the remote control **700**. The first, second, third, and fourth hotkeys are generally assigned different colors, which color indexing is depicted as visual indicia on a selected panel to show the currently assigned function, if any, for each hotkey. As can be seen, the actuator layout can provide a highly efficient, satisfactory, and easily usable experience to the end user.

Unlike the functional associations and functions of many of the actuators, those of some of the actuators are not readily apparent. A number of examples will now be discussed by way of illustration.

The media center button **736**, when selected, can provide information regarding music, videos, photographs, collections or groupings of music, videos, and/or photographs, and internal and external computational devices (such as personal computers, laptops, tablet computers, wireless phones, removable computer readable media, and the like), which can be grouped in a selected manner (such as favorites, most recently viewed, most watched or viewed, and most recently added). The information can includes previews (which can include selected portions of the media content, duration, file size, date created, date last watched, times watched or viewed, and audio and/or video format information).

The application center button **740**, when selected, may provide information regarding pre-installed and downloaded applications. Unlike downloaded applications, pre-installed applications cannot be removed by the user or manually updated. Exemplary pre-installed applications include web browser, settings control, and content search algorithms. By way of illustration, the application center button **740** can

provide a scrollable graphical grid of icons (each icon being associated with an application) currently available in the application center.

The global panel button **744**, when selected, can provide the user, via one or more panels or windows, with access to one or more of, but not limited to, silos, notifications, a web browser, system settings, and/or information associated therewith. For example, the global panel button **744** can enable the user to determine what external devices are currently connected to and/or disconnected from the Intelligent TV **100**, determine what inputs (e.g., HDMI ports) are currently available for connecting to external devices, determine a connection and/or operational status of a selected external device and/or network (e.g., WiFi connected, Ethernet connected, and offline), assign a custom (or user selected) name to each input source, determine what content is currently being offered on Live TV, on demand, the media center, and/or the application center, access vendor messages and notifications to the user (e.g., system and/or application updates are available), activate the Internet browser, and/or access shortcuts on a displayed shortcut bar to more frequently used and desired applications. Common shortcuts are Internet browser (e.g., Internet search engine), system settings, and notifications. The common types of panels are for information (which is typically information related to a currently displayed image and/or content (e.g., title, date/time, audio/visual indicator, rating, and genre), browse requests, and/or search requests (such as search term field)). Each of the panel types may include a panel navigation bar, detailed information or relevant content to the panel function, operation and/or purpose, and a hotkey bar (defining currently enabled functional associations of hotkeys).

The application panel button **748**, when selected, can display an application window or panel. One application panel may be an information panel regarding a selected (pre-installed or previously downloaded) application icon. The information panel can one or more of identify the selected application, provide a description of the functionality (including application developer and/or vendor, version, release, and/or last update date and a category or type of application based on the application's functionality) and user ratings and/or degree of other user downloading of the application (e.g., a star rating assigned based on one or more of the foregoing inputs), provide the option to launch, remove, update, and add to favorites the identified application, and provide a listing of selectable links of other (not yet downloaded) recommended applications that provide similar functionality to the identified application. The latter listing can, in turn, provide a description of the functionality (including application developer and/or vendor, version, release, and/or last update date and a category or type of application based on the application's functionality) and user ratings and/or degree of other user downloading of the application (e.g., a star rating assigned based on one or more of the foregoing inputs).

The functions of the first, second, third, and fourth hotkeys **788**, **792**, **794**, and **796** can change depending on system state, context, and/or, within a selected screen and/or panel, based on a content or currently selected portion of (or relative cursor position on) the screen. Commonly, a currently assigned function of any of the first, second, third, and fourth hotkeys **788**, **792**, **794**, and **796** depends on a currently accessed silo and/or panel (with which the user is currently interacting within the silo). In other words, a first function of one of the first, second, third, and fourth hotkeys **788**, **792**, **794**, and **796** is activated by the respective hotkey in a first system state while a different second function is activated by the respective hotkey in a different second system state. In another example, a third function of one of the first, second, third, and fourth hotkeys **788**, **792**, **794**, and **796** is activated by the respective hotkey when a user focus (or currently selected cursor position or screen portion) is at a first screen position while a different fourth function is activated by the respective hotkey when a user focus (or currently selected cursor position or screen portion) is at a different second screen position. The first screen position can, for instance, be within an icon while the second screen position is outside of the icon. Hotkey functionality that could be enabled when in the first screen position may be "configure" and "remove" and disabled is "add", and, when in the second position hotkey functionality enabled can be "add" and disabled is "configure" and "remove". Generally, the states of hotkeys can include normal (for enabled actions or functions), disabled (when an action or function is temporarily disabled), pressed (when selected by a user to command an action or function to be performed), and unavailable (when no association between the hotkey and an action or function is currently available). While examples of hotkey functions are discussed below, it is to be understood that these are not intended to be exhaustive or limiting examples.

The first hotkey **788**, when selected in a first system state, can enable the user to assign, change, or edit a name of an input source. It is typically enabled only when the input source of HDMI, Comp/YPbPr (e.g., component video cables), video output, and VGA is in focus. When selected in a second system state, the first hotkey **788** can return the user to a top of a scrollable collection of objects, such as application icons.

The second hotkey **792** may show all or less. In other words, the hotkey **792** can allow the user to show all inputs, including the unconnected/undetected ones and to hide the unconnected/undetected inputs, e.g., to expand and collapse the silo/input list. Each input source can have one of two states, namely connected/detected and unconnected/undetected. Some input sources, including Live TV, VOD, media center, and application center are always connected/detected.

The moveable joystick **900** on the bottom of the remote control **700**, when manipulated, can cause a displayed image on the Intelligent TV **100** screen to be displaced a proportional amount. In other words, the displayed image is displaced substantially simultaneously with displacement of the joystick **900** within the joystick aperture **904** in the bottom housing **712** of the remote control. As shown in FIGS. **9**B-C, the joystick **900** moves or slides between forward and reverse positions. Releasing the joystick **900** causes the joystick **900** to return to the center position of FIG. **9**A, and the window to move or slide upwardly (when the joystick is released from the joystick position of FIG. **9**B) or downwardly (when the joystick is released from the joystick position of FIG. **9**C) until it disappears from view as shown in FIG. **11**A. The effect on the screen of the Intelligent TV **100** is shown in FIGS. **11**A-C. In FIG. **11**A, video content, such as TV programming, a video, movie, and the like, is being displayed by front surface of the screen **212**. In FIG. **11**B, the joystick **900** is moved or slid to the upper position of FIG. **9**B, and a drop down window or panel **1100** moves or slides down (at the substantially the same rate of joystick **900** movement) at the top of the screen **212**. In FIG. **11**C, the joystick **900** is moved or slid to the lower position of FIG. **9**C, and a drop up window or panel **1100** moves or slides up (at the substantially the same rate of

joystick **900** movement) at the bottom of the screen **212**. The window **1100** partially covers the video content appearing on the remainder of the screen **212** and/or causes a portion of the screen **212** displaying video content to move and/or compress up or down the height of the window **1100**.

The window **1100** can include one or more of information (which is typically information related to a currently displayed image and/or content (e.g., panel navigation bar, detailed information (e.g., title, date/time, audio/visual indicator, rating, and genre), and hotkey bar (defining current functional associations of hotkeys)), browse requests, and/or search requests. Commonly, the window **1100** includes suitable information about the content (such as name, duration, and/or remaining viewing duration of content), settings information, TV or system control information, application (activation) icons (such as for pre-installed and/or downloaded applications such as application center, media center and Web browser), and/or information about input source(s), When the joystick **900** is in either the forward or reverse position, the user can select an actuator on the front of the remote control, such as the OK button **764**, and be taken, by displayed images on the screen **212**, to another location in the user interface, such as a desktop. This process can be done in a nonintrusive manner and without affecting the flow of content that is pushed up or down. The joystick **900** could be moved, additionally or differently, from side-to-side to cause the window to appear at the left or right edge of the screen **212**.

An alternative actuator configuration is shown in FIG. **10**. The actuators are substantially the same as those of FIGS. **7-9** except that the social network button **1000**, when selected, can automatically select content and publish, via a social network service or other social media, the content to a social network or online community. User or viewer comments and/or other messages can be included in the outbound message. For example, all or one or frames or portions of media content (such as a video, music, a photograph, a picture, or text) can be provided automatically to a predetermined or selected group of people via LinkedIn™, Myspace™, Twitter™, YouTube™, DailyMotion™, Facebook™, Google+™) or Second Life™. The user, upon activating the button **1000** could, in response, select a social forum or media upon which the selected content (which is the content displayed to the user when the social network button **1000** is activated) is to be posted and/or a predetermined group within that social media to which the content is to be posted. Alternatively, these selections could be preconfigured or preselected by the user.

The social network button can also be used to "turn up" or "turn down" a social volume visualization. The Intelligent TV **100** can create dynamically a visualization of aggregated connections (and inbound and/or outbound messages) from a variety of social networks. The aggregation (and inbound and outbound messages) can be depicted graphically on the screen as a volume of connections to influence the viewer user. With a social volume visualization, selected contents of each linked social network profile of a social contact (and inbound and/or outbound messages from or to the linked social network contact and/or current activity of the social contact (such as watching the same programming or content the viewer is currently watching) can be presented in a separate tile (or visually displayed object). The size of the tile can be related to any number of criteria, including a relationship of the linked social contact (e.g., a relative degree of importance or type of relationship can determine the relative size of the tile, a degree of influence of the linked social contact to the current viewer, a geographic proximity of the linked social contact to the current viewer, a degree to which the currently provided media content is of interest to both the viewer and linked social contact (e.g., both parties enjoy war movies, murder mysteries, musicals, comedies, and the like), an assigned ranking of the linked viewer by the viewer, a type of social network type linking the viewer with the linked social contact, a current activity of the social network contact (e.g., currently watching the same content that the viewer is currently watching), a current online or offline status of the linked social contact, and a social network grouping type or category to which both the viewer and linked social contact belong (e.g., work contact, best friend, family member, etc.).

The viewer can designate a portion of the screen to depict the social network aggregation. By turning the social volume up (+) or down (−), the viewer can increase the size and/or numbers of linked contact tiles provided to the viewer. In other words, by increasing the social volume the viewer can view, access, and/or push more social content from those of his or her social networks associated with him or her in a memory of the Intelligent TV. By decreasing the social volume, the viewer can view, access, and/or push less social content from his or her associated social networks. By selecting the mute button **724**, the viewer can stop or pause any interactivity with his or her associated social networks (e.g., inbound or outbound messages). Social volume and/or mute can be separated into two (or more) volume settings for outbound and inbound social network activity. By way of illustration, a first volume setting, control, and/or button can control the volume for outbound social network activity (e.g., outbound social messages) while a second (different) volume setting, control, and/or button can control the volume for inbound social network activity (e.g., inbound social messages). By way of further illustration, a first mute setting, control, and/or button can stop or pause outbound social network activity (e.g., outbound social messages) while a second (different) mute setting, control, and/or button can stop or pause inbound social network activity (e.g., inbound social messages).

A functional block diagram of the remote control is shown in FIG. **12**. The remote control **700** includes a controller **1208** to control and supervise remote control operations, optional wireless (RF) transceiver **1224** and antenna **1244** to send and receive wireless signals to and from the Intelligent TV **100** and other external components, optional infrared emitter **1228** to emit infrared signals to the Intelligent TV **100**, optional light emitting diode or LED driver **1232** to control LED operation to provide video-enabled feedback to the user, actuators **1220** (including the various buttons and other actuators discussed above in connection with FIGS. **7** and **10**), and joystick **900**, all interconnected via a bus **1248**. An on board power source **1200** and power management module **1204** provide power to each of these components via power circuitry **1240**. The infrared emitter **1228** and receiver (not shown) on the Intelligent TV system **100** can be used to determine a displayed object illuminated by the infrared signal and therefore adjust the displayed image, for example to indicate a focus of the user (e.g., illuminate a displayed object or show cursor position relative to displayed objects on the screen) and to determine and activate a desired command of the user. This can be done by tracking a position of the remote control in relation to infrared tracking reference points (e.g., a sensor bar or infrared LED's) positioned on or adjacent to the screen of the Intelligent TV **100**. Motion tracking can further be augmented using position information received from a multi-axis gyroscope and/or accelerometer on board the remote control (not shown).

An embodiment of a database **1400** for storing VOD content is shown on FIG. **14**. In one non-limiting example, the database **1400** can include one or more data structures **1404** for storing individual items of content. The database **1400** can include more or fewer data structures **1404** than those shown in FIG. **14**, as represented by ellipses **1452**. Each data structure may contain one or more fields as shown in FIG. **14**. However, each data structure may have more or fewer fields than those shown in FIG. **14**, as represented by ellipses **1448**.

The data structure **1404** can include one or more of, but is not limited to, a VOD identifier field **1408**, a data field **1412**, a time field **1416**, a metadata field **1420**, a content field **1424**, a view time field **1428**, a view date field **1432**, a view number field **1436**, a status field **1440**, and/or a user-defined attribute field **1444**. Each of the fields can contain information about an item of content. Content can mean any video, picture, music, or other multimedia that may be available to the user for viewing on the Intelligent TV **100**. The fields may describe the content and/or information about the content.

A VOD identifier field **1408** can include an identifier that uniquely identifies the content associated with data structure **1404**. The identifier can be any alphanumeric identifier, symbolic identifier, globally unique identifier (GUID), or other types of identifiers. The identifier in the VOD identifier field **1408** can uniquely identify the content in comparison to all other content, thus, the VOD identifier **1408** is the only identifier of its type used within the database **1400**.

The date field **1412** may include a date at which the content was created and/or downloaded into the database **1400**. The date **1412** can include any type of date format, and may be a day, a year, and/or a month. The time field **1416**, similar to the date field **1412**, can include a time at which the VOD was downloaded and/or created. The time **1416**, with the date **1412**, gives an indication to the Intelligent Television **100** about when this item of VOD content was available to the user.

Metadata field **1420** can include information about the VOD content. This information can include the genre of the VOD content, the actors within the content, the director for the VOD, the location in which the content was created, for instance, whether the content is movie made in the United States, an Indian movie, a European movie, etc., the year at which the movie was created, or other such information about the VOD content. This information may be used for collection sorting as described hereinafter. Field **1424** includes the data for the content. In one non-limiting example, the data can include an mpeg or other type of video format data, which can be stored within field **1424**.

The view time and view date fields, **1428**, **1432**, can include the last time and date at which the user viewed the VOD content. Thus, the view time **1428** can include a time at which the user either began watching the last session with the content, or the time at which the user stopped watching the content during the last session. The view date **1432** also includes the month, day, and/or year in which the user decided to last watch the content.

The view number field **1436** may include a counter for the number of times the user has accessed and viewed the content in data structure **1404**. The view count **1436** may be triggered by the viewing session that has lasted a predetermined period of time. For example, if the user watches an item of content for more than five minutes, the view number **1436** can increment. In other circumstances, any time an item of content is played, regardless of how long the user watches the content, the view count **1436** may increment. This view count **1436** persists into the future.

A status **1440** may indicate the status of the content from the last viewing session. For example, if the content was half watched, the status indictor **1440** will indicate that the content was half completed. In other examples, the status **1440** indicates only the first time status of the content. For example, during the first time the content is viewed, the status **1440** increments over some predetermined level, for example, a quarter watched, half watched, three-quarters watched, completely watched, etc. This status **1440** is maintained regardless of the number of times the content is viewed. Therefore, if a content is viewed a second time, the status **1404** may only show the content has been viewed. In other embodiments, the status **1440** may determine whether the content is new, recently viewed, a favorite, or other information.

User-defined field **1444** includes any kind of user-defined information about the content. For example, the user may set the content as a favorite, which may be stored in user-defined category **1444**. There may be other user-defined **1444** information, such as, whether the content is for adults only, whether the content is to be maintained for a certain person, etc.

An embodiment of a method **1500** for sorting VOD collections is shown in FIG. **15**. While a general order for the steps of the method **1500** is shown in FIG. **15**, the steps may be arranged in any order. Generally, the method **1500** starts with a start operation **1504** and ends with an end operation **1536**. The method **1500** can include more or fewer steps or can arrange the order of the steps differently than those shown in FIG. **15**. The method **1500** can be executed as a set of computer-executable instructions, executed by a computer system, and encoded or stored on a computer readable medium. Further, the method **1500** can be executed by a gate or other hardware device or component in an Application Specific Integrated Circuit, a Field Programmable Gate Array, or other type of hardware device. Hereinafter, the method **1500** shall be explained with reference to the systems, components, modules, software, data structures, user interfaces, etc. described herein.

The Intelligent TV **100** can receive content, in step **1508**. In one non-limiting example, the Intelligent TV **100** may connect through a network **132** to media application **150**, or another source, such as digital media library **148** for information about VOD content. This VOD content may be retrieved or pushed to the Intelligent TV **100**. Regardless, the VOD content can be received through the port interface **352** and provided to the processor **364**. In one non-limiting example, the processor **364** can execute a VOD subservice **620**, which can receive the content through an instance of the VOD source plug-in **644**. The VOD source plug-in **644** can retrieve or receive the VOD content and provide the VOD content to the VOD subservice **620** to be stored in database **632**. Database **632** may be the same or similar to database **1400** as described in conjunction with FIG. **14**. Thus, the information about the VOD content and the VOD content itself may be sorted and stored in fields **1408** through **1424**.

Thereinafter, the user may select a button on the remote control **700**, such as button **740**, to preview or look at available VOD content. The VOD subservice **620** may read the metadata field **1420** to determine information about the VOD content. The metadata characteristics **1420** may then be used to sort the VOD content into collections, in step **1516**. For example, the video subservice **620** can sort the VOD content into a collection based on geographical area or

date of issue of the VOD. The VOD subservice **620** may then provide this information to the panel manager **536** of the user interface application **468**. The panel manager **536** may then provide a view of the content, in step **1518**. This view may be a sorted selection of content, such as a collection view **1704**, shown in FIG. **17**.

Thereinafter, the user may provide user-defined criteria. The user-defined criteria may be entered through a remote control **700**, or some other user interface, and can be provided to the VOD subservice **620**. The user-defined criteria may be stored in the user-defined field **1444** of database **1400**. Thereinafter, the VOD subservice **620** may determine if there are user-defined criteria that exist, in step **1520**. In one non-limiting example, the user may enter a button on remote control **700** to sort the content based on the user-defined criteria. The VOD subservice **620** may then read any information from the user-defined field **1444** to determine if criteria exist. If no criteria exist, the method **1500** moves through the NO branch back to step **1516** to sort the collections based on metadata. However, if user-defined criteria does exist, the method **1500** proceeds YES to step **1524**.

In step **1524**, the VOD subservice **620** may receive the criteria and store that criteria in field **1444**, in step **1525**. Thus, if the data or criteria is being received by the user, the VOD subservice **620** can store any user-defined criteria in field **1444**.

Thereinafter, the VOD subservice **620** may access the user-defined criteria **1444** to sort the collection or VOD content, in step **1528**. The VOD subservice **620** may determine the sort that is desired by the user based on inputs into user interface and use that information to sort the content view. The sort may be based on such things as whether or not the content is a favorite, whether the content is appropriate for children, or some other type of criteria. Once sorted, the VOD subservice **620** provides the sort information to the panel manager **536** to provide a view of the sorted content, in step **1532**. The content may have a similar view **1704**, shown in FIG. **17**, but have a different arrangement of the content thumbnails based on the sort criteria.

An embodiment of a method **1600** to provide a series of contextual and easily understood panels to navigate through VOD content is shown in FIG. **16**. While a general order for the steps of the method **1600** is shown in FIG. **16**, the steps may be arranged in any order. Generally, the method **1600** starts with a start operation **1604** and ends with an end operation **1652**. The method **1600** can include more or fewer steps or can arrange the order of the steps differently than those shown in FIG. **16**. The method **1600** can be executed as a set of computer-executable instructions, executed by a computer system, and encoded or stored on a computer readable medium. Further, the method **1600** can be executed by a gate or other hardware device or component in an Application Specific Integrated Circuit, a Field Programmable Gate Array, or other type of hardware device. Hereinafter, the method **1600** shall be explained with reference to the systems, components, modules, software, data structures, user interfaces, etc. described herein.

The Intelligent TV **100** can receive a selection for VOD content, in step **1608**. In one non-limiting example, the user may select a VOD button **740**, on a remote control **700**, which sends a signal to the IR/RF module **354** of the Intelligent TV **100**. The signal may then be sent to the processor **364**, which translates the signal with a driver **420**, and provides the information to the user interface **468** and the VOD subservice **620**. The panel manager **536** and/or the silo manager **532** may then receive the signal through the input event dispatcher **508** from the processor **364** and act upon the signal to provide a master view of the content, in step **1612**.

The views for the VOD content are broken down into a series of hierarchical steps that allow the user to easily navigate through VOD content. For example, the hierarchical steps may be as shown in FIG. **17** and FIG. **18**. In one non-limiting example, a set of user interfaces **1700**, **1800** proceed through four categories to play VOD content. A master view selection **1708**, **1804** is a top tier user interface that allows the user to select a type of collection shown in tier **1712**. A collection view **1704**, **1808** uses a list of media based on a target or sort criteria. The user may then select some type of content from the collection view **1808** to be provided in either a digest view **1724** or a detail view **1728** in tier **1716**, **1812**. A digest view **1724** shows a view of a television series or series of episodes, where a description of the series and a set of episodes is provided. If there is no series with the content selected, the detail view **1728** may be provided, which gives information for the content which was selected. From one of these views, the user may then select a particular content to play or select a play icon, which may then provide a player view **1816** in tier **1720**. In the player view **1816**, the actual content is provided to the user and played per their selection.

Thus, the panel manager **536** upon having a receipt of VOD can provide the master view to the user. The master view **1900** then presents information as shown in FIG. **19**. A header navigation bar **1944** provides for selections of types of VOD content. For example, the user can select showcase material **1904**, movies **1908**, TV series **1912**, or variety programs **1916**. This first selection may allow the user to navigate to a content or collection view, including that type of material. Further, there are a series of thumbnails to select to navigate to different types of collections. For example, the user can select a special topics icon **1920** to proceed to special content. The user can select a recommended thumbnail **1924** to navigate to a recommenced collection. The user can select favorites thumbnail **1928** to navigate to a favorite's collection. Similarly, the user can select a top watched thumbnail **1932** or a new thumbnail **1936** to navigate to either the top watched content or the new content. Finally, the user can select an all movies thumbnail **1940** to view a collection of all movies currently available as VOD. The user may then make a selection of a collection using the directional pad **760** or some other remote control button.

The selection signal may then be received thorough the IR/RF module **354** and provided to the processor **364** to be translated by a driver **420** and the can be sent to the user interface **468**. In one non-limiting example, the user interface **468** may receive collection information from the VOD subservice **620**. A selection of content in the collection of content may be received, in step **1616**, and can cause the panel manager **536** to provide a collection view **1712**, in step **1620**. The user may then select the type of content from the collection view, where this signal is received by the processor **364**, in step **1624**.

The VOD subservice **620** may then determine if the received selection is a movie, a single show, a series, or other types of content. In this way, the VOD subservice **620** can determine if a digest view or a detail view should be provided. If the selection is associated with a series with two or more episodes, a digest view **1724** should be provided. In contrast, if a single show, movie, or a series with only a single episode is selected, a detail view **1728** should be provided. Thus, the VOD subservice **620** or the panel manager **536** can determine if the selection is a movie or a

series. If the selection is a series, the method **1600** proceeds through the SERIES branch to step **1632**. If the selection is a movie or single show, the method **1600** moves through the MOVIE branch to step **1644**.

In step **1632**, a digest view **1724** may be provided to the user. A digest view, similar to that shown in view **1724**, FIG. **17**, provides a description or view of the series and then the ability to select one or more episodes in that series. The user may then move the focus onto a single episode using the directional pad **760**, or some other user interface device, and select the episode to be viewed. This selection may then be received by the processor **364** and provided to user interface application **468**. The selection of the episode **1636** causes the user interface to request content information **1424** from the VOD subservice **620**, which can provide that content information **1424** from database **1400** to the user interface application **468**. The user interface application **468** may then provide a view of the content, in step **1640**. For example, the user interface application **468** can provide a player view **1720**, which shows the content being viewed.

In the detail view provided by the user interface application **468**, in step **1644**, the user interface application **468** provides information specific about a single show, movie, or episode. This detail view may be the same or similar to view **1728**, shown in FIG. **17**. The user may select to play the episode from the detail view **1728**. This selection to play may be received by the processor **364**, in step **1648**, through similar procedures as provided above. The selection can cause the user interface application **468** to provide a player view **1720** and provide a view of the content, in step **1640**, similar to the processes as that described above.

The series of views that are performed by executing process **1600** can be as shown in FIG. **18**. In one non-limiting example, the series **1800** includes a master view selection **1804**. By selecting something in the master view, a collection view from the set **1808** is provided. By selecting a type of content within the collection view, the Intelligent TV **100** provides either a digest view or a detailed view, such as in set **1812**. By selecting to play an episode in set **1812**, the Intelligent TV **100** provides a player view **1816**. FIG. **18** shows the hierarchical order of the menus, which is intuitive to a user.

A method for providing several views of programming is shown in FIG. **20**. While a general order for the steps of the method **2000** is shown in FIG. **20**, the steps may be arranged in any order. Generally, the method **2000** starts with a start operation **2004** and ends with an end operation **2040**. The method **2000** can include more or fewer steps or can arrange the order of the steps differently than those shown in FIG. **20**. The method **2000** can be executed as a set of computer-executable instructions, executed by a computer system, and encoded or stored on a computer readable medium. Further, the method **2000** can be executed by a gate or other hardware device or component in an Application Specific Integrated Circuit, a Field Programmable Gate Array, or other type of hardware device. Hereinafter, the method **2000** shall be explained with reference to the systems, components, modules, software, data structures, user interfaces, etc. described herein.

The user may select a VOD request through the remote control **700**, by selecting button **740**, in step **2008**. The VOD selection may be received through the IR/RF module **354** at the processor **364**. The signal may be translated by a driver **420** and provided to the VOD subservice **620** and/or the user interface application **468**.

The user interface application **468** may execute a panel manager **536** or silo manager **532** through the input event dispatcher **508** to switch to the VOD silo through the silo transition control **504**. The silo manager **532** may then provide a master layout view with collections for showcase, movie, TV, and variety programs, in step **2012**. For example, the panel manage **536** may provide the panel shown in FIG. **21**. In one non-limiting example, the user interface **2100** provides a navigation bar **2120** having selectable devices **2104** through **2116**. The device **2104** allows the user to select a master layout view for showcase material. The user interface device **2108** allows the user to select a master layout view for movies. The user interface device **2112** allows the user to select a master layout for TV series, while selecting device **2116** provides a master layout for variety programs.

The user may then use the directional pad **760**, or some other remote control button on remote control **700**, to select one of the four user interface devices, **2104** through **2116**, on the navigation bar **2120**. For example, the user may put the focus (e.g., the focus is currently on the "Showcase" selection **2104** in FIG. **21**) on one of the text displays in navigation bar **2120** in user interface **2100**, and then select an OK button **764** to select the material for that user interface device **2104-2116**.

The selection is received, again, through the processor **364** and provided to the panel manager **536**, in step **2016**. The panel manager **536** must then determine which of the four categories was selected, in step **2020**. In one non-limiting example, the panel manager **536** determines which of the devices **2104** through **2116** had focus when selected by the user. If the selection was for the "Showcase" **2104**, the method **2000** proceeds to the SHOWCASE branch to step **2024**. If the selection was for a "movie" **2108**, the method **2000** proceeds to the MOVIE branch to step **2028**. If the user selected the "TV series" device **2112**, method **2000** proceeds to the TV branch to step **2032**. Finally, if the user selected device **2116**, the method **2000** proceeds to the VARIETY branch to step **2036**.

In step **2024**, the panel manager **526** provides a showcase user interface, in step **2024**. For example, the panel manager **536** may provide the showcase user interface **2200** shown in FIG. **22**. In one non-limiting example, the showcase view provides thumbnails **2204** through **2216**. Each of these thumbnails represents a different topic or collection of showcase material. Showcase material can be any type of material from the other categories that is pertinent to the user and in which the user may have a desire to watch. Thus, the showcase view **2200** has selection of content from all categories and may be organized by last viewed, represented by thumbnail **2204**, special topics content, represented by thumbnail **2208**, top watched content, represented by thumbnail **2212**, and/or high definition content, represented by thumbnail **2216**. Thus, the showcase user interface can organize all content based on criteria that are either user-defined criteria or are predetermined criteria based on statistics associated with the underlying content.

If the user selects the variety user interface device **2212**, the panel manager **536** can provide a panel manager user interface **2300** as shown in FIG. **23**. Variety programming can be any programming not necessarily associated with a movie or TV series. For example, variety programming can include documentaries, special interest shows, or other types of content. The variety programs can have one or more thumbnails, which organize the content and allow the user to select a collection to define content. These thumbnails may represent certain topics, for example, thumbnail **2304** represents specials topics contents, thumbnail **2308** represents recommended content, thumbnail **2312** represents user

selected favorites content, thumbnail **2304** represents new content, thumbnail **2320** represents top watched or most viewed content, and thumbnail **2316** can represent all types of variety content. These thumbnails **2304-2324** may be selected by the user to be provided with a collection view that is organized based on the associated category that was chosen by the user. Thumbnails may be provided from the thumbnail database **632**.

If the user selects the movie device **2108**, the panel manager **536** can provide user interface **2400** shown in FIG. **24**. The panel manager, in step **2028**, provides this user interface **2400** with thumbnails **2404-2424**, similar to those described in conjunction with the variety user interface in FIG. **23**. Thus, the user may, again, select one or more movies, or collections of movies, based on the top categories or the categories listed by the thumbnails in user interface **2400**.

If the user selects the TV series device **2112**, the panel manager **536** can provide a TV user interface **2500** shown in FIG. **25**, in step **2032**. In one non-limiting example, the panel manager **536**, again, provides a series of thumbnails **2504-2524**, which may be the same or similar to those described in conjunction with the variety user interface in FIG. **23**. Further, one or more of the thumbnails may provide several views of different content. For example, user interface device **2504** may sequence through a series of thumbnails representing different types of series. For example, the user interface device **2504** shows a "Game of Thrones" thumbnail. However, the next sequenced thumbnail may apply to the TV series "Homeland." Thus, the user may view more types of content within one area of user interface **2500** than that shown in any instant of time. These types of sequenced or moving thumbnails may be used in any of the user interfaces described hereinabove.

An embodiment of the method **2600** for providing a collection view of content is shown in FIG. **26**. While a general order for the steps of the method **2600** is shown in FIG. **26**, the steps may be arranged in any order. Generally, the method **2600** starts with a start operation **2604** and ends with an end operation **2636**. The method **2600** can include more or fewer steps or can arrange the order of the steps differently than those shown in FIG. **26**. The method **2600** can be executed as a set of computer-executable instructions, executed by a computer system, and encoded or stored on a computer readable medium. Further, the method **2600** can be executed by a gate or other hardware device or component in an Application Specific Integrated Circuit, a Field Programmable Gate Array, or other type of hardware device. Hereinafter, the method **2600** shall be explained with reference to the systems, components, modules, software, data structures, user interfaces, etc. described herein.

The panel manager **536** can provide a master layout view, in step **2608**. Thus, as described in conjunction with FIGS. **2000** through **2500**, the panel manager **536** using information provided by the VOD subservice **620** can provide a master layout view.

The user may select a thumbnail within one of the user interface devices shown in FIGS. **21** through **25**. The selection may be made using a directional pad **760** to change the focus onto one of the thumbnails and, using the OK button **764**, select that thumbnail. The remote control signal may then be sent to the Intelligent TV **100** through the IR/RF module **354** to the processor **364**. A driver **420** interprets the signal and provides the translation to the user interface application **468**. In one non-limiting example, an input event dispatcher **508** may then send that information to the panel manager **536** to indicate that a selection has been made. A panel manager **536** thus can receive the selection, in step **2612**.

Based on the selection, the panel manager **536** sends the information of the selection to the VOD subservice **620**. The VOD subservice **620** may then determine which content is applicable to the selection, in step **2616**. In one non-limiting example, the VOD subservice **620** may be provided information from the panel manager **536** as to which of the category was selected. For example, the user can select high definition content, most watched content, top favorites content, most viewed content, or other types of content, as described in conjunction with FIGS. **20** through **25**. Once determined, the VOD subservice **620** may then access database **632** that includes the information described in FIG. **14**.

In one non-limiting example, the VOD subservice **620** may search metadata **1420** or other information in fields **1428** through **1444** and fields **1412** through **1416**. This information may be accessed to determine which content applies to the selected category. For example, most recent or new content may have a date and time **412**, **416**, that is within a certain timeframe or period of time. Further, the VOD subservice **620** can access the view count **1436** to determine if the information has been viewed or is new. The view time and view date **428** and **432** may also be used to determine whether the content is new. Further, the view count **436** may be used to determine if the content is most watched. The status indicator **1440** can also be used to provide information for different categories; also, the user-defined field **1444** can be used to determine if the item is a favorite. Thus, the VOD subservice **620** can access any of the information in data structure **1404** to determine which content is applicable to the selection. This content may then be provided to the panel manager **536**.

The panel manager **536** can then provide a new view of a collection of content, in step **2612**. In the content view, the panel manager **536** can now provide a series of filter criteria to allow the user to further filter the collections to better target a particular type or single item of content, in step **2612**. The panel manager **536** can provide a first user interface having one or more filter criteria, such as user interface **2700**. For example, in FIG. **27**A, user interface **2700** provides one or more filter criteria shown in section **2704**. In one non-limiting example, the filter criteria **2704** can apply to a region in which the movie was created **2708**. Past filter criteria are shown in section **2712**. The filter criteria **2704** can include a type of content, a year in which content was made, or other such types of filtering selections.

The user may then move the focus, with the directional pad **760**, to highlight one of the filter selections. The selection may be selected, by using button **764**, to send a signal to the Intelligent Television **100**. The signal is received as described hereinbefore and provided to the panel manager **536**. The panel manager **536** determines the selection made and provides that to the video subservice **620**, which further refines the search for content provided to the panel manager **536**. The panel manager **536** may then provide a next user interface with the content filtered, in step **2620**. Thus, the user can navigate through one or more different types of filters to better categorize or reduce the amount of content available for selection, such as user interfaces **2720** and **2724** in FIGS. **27**B and **27**C.

The panel manager **536** can then determine if the current selection is the last filter selection made, in step **2624**. For example, the user may be able to select a content viewed in section **2716**, in which case no further filter criteria is

needed. In other embodiments, it may be the last of the type of filter criteria available or there may be only a single item of content or a small set of content to be provided in a last screen. If it is the last filter criteria selected, the method **2600** proceeds YES to step **2628**. If it is not the last filter criteria selected, the method **2624** can proceed through the NO branch back to step **2612** to receive another filter selection. In step **2628**, the VOD subservice **620** provides the last selection of content to the panel manager **536**. The panel manager **536** may then present this content to the user. The user may then select a content, in which case the panel manager **536** receives that selection, in step **2628**. Based on that type of selection, the panel manager **536** may provide a detailed view, described hereinbefore, to view the content for the user, in step **2632**.

The filter views can be presented in two types of user interfaces shown in FIGS. **28** and **29**. The user interface **2800** provides a filter bar or filter categories in the navigation bar as shown in user interface **2800**. The filter bar can include one or more filter criteria as shown in section or view **2804**. Thus, depending on the types of filter category, including genres, dates, regions, etc., the navigation bar can contain different filter criteria.

In FIG. **29**, the filter criteria may be provided in one or more areas inside a user interface **2900**. For example, a last used filter criteria may be shown in section **2904**, while selectable filter criteria may be shown in section **2908**. A view of possible content associated or that may be provided with such a search is shown in section **2912**. The user interface **2900**, shown in FIG. **29**, may be the same or similar as that shown in FIG. **27**A.

An embodiment of a method **3000** for providing a collection view after filtering category is shown in FIG. **30**. While a general order for the steps of the method **3000** is shown in FIG. **30**, the steps may be arranged in any order. Generally, the method **3000** starts with a start operation **3004** and ends with an end operation **3036**. The method **3000** can include more or fewer steps or can arrange the order of the steps differently than those shown in FIG. **30**. The method **3000** can be executed as a set of computer-executable instructions, executed by a computer system, and encoded or stored on a computer readable medium. Further, the method **3000** can be executed by a gate or other hardware device or component in an Application Specific Integrated Circuit, a Field Programmable Gate Array, or other type of hardware device. Hereinafter, the method **3000** shall be explained with reference to the systems, components, modules, software, data structures, user interfaces, etc. described herein.

The panel manager **536** can receive a selection for a collection of movies from a master view or collection view after a filtered category selection, in step **3008**. For example, after proceeding through the process described in conjunction with FIG. **26**, the panel manager **536** may determine a collection of movies that applies to the filter categories provided by the user. This final selection received through the remote control **700** at the panel manager **536** can be provided to the VOD subservice **620**.

The VOD subservice **620** can determine the collection of movies that apply to the filter category, in step **3012**. The panel manager **536** thus provides the VOD subservice **620** with the filtering categories or information in which the VOD subservice **620** searches the database **1400** for content applicable to that filter selection or selections. This collection of content may be provided back to the panel manager **536** with the thumbnail information or other content information. The thumbnails may be retrieved by the thumbnail cache manager **660** from the thumbnails database **668**. This collection information is then given to the panel manager **536**.

The panel manager **536** may then provide the catalog view of the collection, in step **3016**. For example, the panel manager **536** can provide a user interface similar to that shown in FIG. **31**. In one non-limiting example, the user interface **3100** is directed towards movie content as indicated by the title **3104**. At least three filter criteria have been received, as shown in navigation bar **3108**. The collection view includes a content area **3112** that provides one or more thumbnails that are associated with content that are available based on the filter criteria in **3108**. For example, thumbnail **3116** can be for a movie that is returned by the VOD subservice **620** based on the filter criteria **3108**. The thumbnails, such as thumbnail **3116**, are selectable and, if selected, instruct the Intelligent TC **100** to provide content.

An embodiment of a method **3200** for providing a catalog view and subsequent detail and series use for TV series and/or variety series is shown in FIG. **32**. While a general order for the steps of the method **3200** is shown in FIG. **32**, the steps may be arranged in any order. Generally, the method **3200** starts with a start operation **3204** and ends with an end operation **3252**. The method **3200** can include more or fewer steps or can arrange the order of the steps differently than those shown in FIG. **32**. The method **3200** can be executed as a set of computer-executable instructions, executed by a computer system, and encoded or stored on a computer readable medium. Further, the method **3200** can be executed by a gate or other hardware device or component in an Application Specific Integrated Circuit, a Field Programmable Gate Array, or other type of hardware device. Hereinafter, the method **3200** shall be explained with reference to the systems, components, modules, software, data structures, user interfaces, etc. described herein.

On receiving filter criteria, in step **3212**, the panel manager **536** and VOD subservice **620** can provide a catalog view, in step **3216**. Receiving a filter criteria and providing a catalog view may be as described in conjunction with FIGS. **26** and **30** described hereinbefore.

The panel manager **536** may receive a series selection, in step **3220**. In one non-limiting example, the user may use the remote control **700** to move a focus with the directional pad **760** and select the focused thumbnail with button **764**. For example, as shown in FIG. **33**, the focus, in user interface **3300**, is placed on the series "Game of Thrones," represented by thumbnail **3304**. The thumbnails, shown in user interface **3300**, were provided in reaction to providing filter criteria **3308**. The user may select the Game of Thrones thumbnail by selecting the OK button **764**. The selection for this series is received by the panel manager **536**, in step **3220**.

The selection may then be provided to the VOD subservice **620**. The VOD subservice **620** may then determine if there is more than one season available for the series selected, e.g., "Game of Thrones," in step **3224**. If there is only a single season, the method proceeds through the ONE branch to step **3232**. However, if there is more than one season, the method proceeds through the GREATER THAN ONE branch to step **3228**.

In step **3228**, the VOD subservice **620** may determine if all the seasons, or episodes within the seasons, have been aired. For example, if there are four seasons and the fourth season is completely aired, then the sort criteria can be different. However, if the fourth season has not been completely aired, there may be different sort criteria for that situation. If all seasons have been aired, the seasons can be

ordered and provided to the panel manager **536** in order from the first season to the last season. However, if the last season has not been fully aired, these seasons are provided to the panel manager **536** from the most recent season to the oldest season.

The VOD subservice **620** can also determine, in step **3232**, if the series is fully archived. In this case, for example, if all the episodes within a season have been received and archived in the VOD database **632**. If the series is fully archived, the method **3200** proceeds YES to step **3236**. If the season is not fully archived, then the method proceeds NO to step **3240**.

The VOD subservice **620** can provide the series with the episodes arranged in ascending order if all the series have been archived, in step **3236**. For example, if the fourth season is fully archived, the episodes within that season may be listed from episode one to the last episode. In contrast, in step **3240**, if the series is not fully archived, the VOD subservice **620** can arrange the episodes in descending order. For example, if season four is not fully archived, the episodes may be arranged from the last latest episode to the first episode.

The panel manager **536** may receive this information and then provide a user interface having this type of arranged seasons and episodes, in step **3242**. For example, the panel manager **536** can provide a user interface **3400** similar to that shown in FIG. **34**. In one non-limiting example, the user interface **3400** includes a section for the season listings **3412**. As explained previously, if the seasons are fully aired, the user interface device **3416** will contain the first season, while the user interface device **3420** can include the last season. In contrast, if the seasons are not fully aired, user interface device **3416** will include the last season, while device **3350** will include the first season or earlier seasons.

The episodes may be arranged in section **3404**. Again, as explained previously, if the seasons are fully archived, the episodes are arranged in ascending order with display **3424** including the first episode of the season and with user interface section **3428** including a later aired episode. In contrast, if the episode or season is not fully archived, user interface portion **3424** can provide information about the last aired episode, while a portion **3428** will include information about an episode aired previously or in the past. The section **3408** may include information about the series, including a poster or thumbnail that gives a visual representation of the season, and a description of the series.

Another example of the digest view for a series of television shows or variety shows is shown in FIG. **35**. The user interface **3500** can display a series, e.g., Game of Thrones. The season listing is shown in section **3504**, while the episode listings for season three is shown in section **3508**. One episode **3512** is shown in focus. These displays are governed by the same rules that were explained previously.

The user may then select an episode using the directional pads **760** and the selection button **764** as described herein, in step **3244**. The selection may be for an episode. For example, the episode with the focus **3512** shown in FIG. **35** may be selected. On receiving a selection, the VOD subservice **620** can provide the content information **354** to the panel manager **536**. The panel manager **536** may then provide a view for playback **3600** shown in FIG. **36**, in step **3248**. In one non-limiting example, the user interface **3600** can provide the content in portion **3616**. The user may control the playback using playback controls **3612**. Uniquely, the playback user interface **3600** can also show tiles of thumbnails that are selectable by the user to move to a next episode **3604** or previous episode **3608** in the series. In this way, for TV series or variety series, the user may easily navigate between episodes in a season with these controls in the playback view.

A method **3700** for toggling between the status of programs is shown in FIG. **37**. While a general order for the steps of the method **3700** is shown in FIG. **37**, the steps may be arranged in any order. Generally, the method **3700** starts with a start operation **3704** and ends with an end operation **3724**. The method **3700** can include more or fewer steps or can arrange the order of the steps differently than those shown in FIG. **37**. The method **3700** can be executed as a set of computer-executable instructions, executed by a computer system, and encoded or stored on a computer readable medium. Further, the method **3700** can be executed by a gate or other hardware device or component in an Application Specific Integrated Circuit, a Field Programmable Gate Array, or other type of hardware device. Hereinafter, the method **3700** shall be explained with reference to the systems, components, modules, software, data structures, user interfaces, etc. described herein.

In one non-limiting example, the user may be provided a catalog view, in step **3708**. The panel manager **536** can provide a catalog view, similar to that shown in FIG. **38**. In one non-limiting example, the catalog view **3800** includes a bunch of thumbnails for example, thumbnail **3804**, that are associated with a type of content. These content thumbnails may be arranged in any type of order based on filter criteria. The user may then select an icon **3808** to watch the content provided in the catalog view **3800**. This selection may be completed, for example, by the user placing focus on device **3808** with the directional pad **716** and selecting device **3808** with the button **764**. In other embodiments, the device **3808** may be associated with button **794**, and when selected, automatically selects device **3808**. This selection is received by the processor **364** and provided to the panel manager **536** in step **3712**.

Based on the selection, the content in user interface **3800** may be arranged based on whether the program has been watched or not. For example, the user may select to watch only programs that have been previously watched, which may be displayed in user interface **3800**. However, the watch status may be different, and the user may desire to watch programs that are in progress. Further, the user may desire to watch only programs or view programs that have not been watched previously. Thus, the panel manager **536** can determine which category or watched category is requested, in step **3716**.

In step **3716**, the panel manager **536** may determine the context of the interface **3800**. The context means what type of watched status is currently being displayed. If the user interface device **3808** is selected, the panel manager **536** can determine what is the next category for watched status. The next category may then be provided to the VOD subservice **620** to search the database **1400** for status information **1370**, which is associated with that watched category. The content having that watched status is provided back to the panel manager **536** to render in the user interface **3800**. Thus, the content thumbnails shown in user interface **3800** will change based on the watched status being provided. Thus, the panel manager **536** can change the view of user interface **3800** to sort by the watched category, in step **3720**. The view may thus be toggled between watched status, in progress status, or not watched status.

A method **3900** for providing playback of VOD is shown in FIG. **39**. While a general order for the steps of the method **3900** is shown in FIG. **39**, the steps may be arranged in any

order. Generally, the method **3900** starts with a start operation **3904** and ends with an end operation **3940**. The method **3900** can include more or fewer steps or can arrange the order of the steps differently than those shown in FIG. **39**. The method **3900** can be executed as a set of computer-executable instructions, executed by a computer system, and encoded or stored on a computer readable medium. Further, the method **3900** can be executed by a gate or other hardware device or component in an Application Specific Integrated Circuit, a Field Programmable Gate Array, or other type of hardware device. Hereinafter, the method **3900** shall be explained with reference to the systems, components, modules, software, data structures, user interfaces, etc. described herein.

A user interface application **468** provides a catalog view for an item of content, in step **3908**. A catalog view may be as described in conjunction with FIG. **38**. The intelligent television **100** can receive a selection to play VOD content, in step **3912**. The user may place focus on a selection **3804** in the catalog view **3800** and press a select button using a remote control **700**, as has been described previously herein.

The selection signal may be sent to the user interface application **468** and/or the VOD subservice **620**. The user interface application **468** and/or the VOD subservice **620** may then determine if a user has previously watched the selected content, in step **3916**. The VOD subservice **620** stores the watch status **1440** in database **1400**, as described in conjunction with FIG. **14**. The status **1440** is associated with the content **1424** in data structure **1404**. This status information **1440** may be retrieved from the data base **1400** by the VOD subservice **620** and provided to the user interface application **468**.

If the user has previously watched the content, the method **3900** proceeds YES to step **3920**. In step **3920**, the user interface application **468** may then, based on if the status **1440** shows that the user previously viewed the content, prompt the user if the user desires to resume watching the content. The user interface application **468** can provide a notification or other user interface device alerting the user that the user had previously watched the content. The user interface device may have a selectable button or other device to resume watching the content. The user interface application can determine if the user desires to resume watching the content based on the selection of the button, in step **3920**. If the user selects the button, the method **3900** proceeds YES to step **3924** where the content is resumed from the point at which the user had stopped watching. If the user does not select the button, the method **3900** proceeds NO to step **3928** where the user interface application **468** begins the playback of the content from a beginning of the content. If the user has not previously watched the content, the method **3900** proceeds NO to step **3928** where the user interface application **468** also plays the content from a beginning of the content.

During playback, the user may select a button on a remote control **700** to view playback controls, in step **3932**. The playback controls may be the same or similar to those described in conjunction with FIG. **36**. In response to receiving the playback controls selection, the user interface application **468** can provide the playback controls for a predetermined amount of time, in step **3936**. The predetermined amount of time can be any time period, for example, 10 seconds, a minute, five minutes, etc.

The playback controls **3612** may be in a footer, as shown in FIG. **36**. A first user-selectable device **3608** for navigating to a previous episode may be provided to the left of the playback controls **3612** in the footer. A second user-selectable device **3604**, for navigating to a next episode, may be provided to a right of the playback controls **3612** in the footer. The playback controls **3612** can include selections to rewind the content, forward the content, play the content, and pause the content. Other controls are possible and envisioned.

The exemplary systems and methods of this disclosure have been described in relation to an Intelligent Television. However, to avoid unnecessarily obscuring the present disclosure, the preceding description omits a number of known structures and devices. This omission is not to be construed as a limitation of the scopes of the claims. Specific details are set forth to provide an understanding of the present disclosure. It should however be appreciated that the present disclosure may be practiced in a variety of ways beyond the specific detail set forth herein.

Furthermore, while the exemplary aspects, embodiments, and/or configurations illustrated herein show the various components of the system collocated, certain components of the system can be located remotely, at distant portions of a distributed network, such as a LAN and/or the Internet, or within a dedicated system. Thus, it should be appreciated, that the components of the system can be combined in to one or more devices, or collocated on a particular node of a distributed network, such as an analog and/or digital telecommunications network, a packet-switch network, or a circuit-switched network. It will be appreciated from the preceding description, and for reasons of computational efficiency, that the components of the system can be arranged at any location within a distributed network of components without affecting the operation of the system. For example, the various components can be located in a switch such as a PBX and media server, gateway, in one or more communications devices, at one or more users' premises, or some combination thereof. Similarly, one or more functional portions of the system could be distributed between a telecommunications device(s) and an associated computing device.

Furthermore, it should be appreciated that the various links connecting the elements can be wired or wireless links, or any combination thereof, or any other known or later developed element(s) that is capable of supplying and/or communicating data to and from the connected elements. These wired or wireless links can also be secure links and may be capable of communicating encrypted information. Transmission media used as links, for example, can be any suitable carrier for electrical signals, including coaxial cables, copper wire and fiber optics, and may take the form of acoustic or light waves, such as those generated during radio-wave and infra-red data communications.

Also, while the flowcharts have been discussed and illustrated in relation to a particular sequence of events, it should be appreciated that changes, additions, and omissions to this sequence can occur without materially affecting the operation of the disclosed embodiments, configuration, and aspects.

In another embodiment, the systems and methods of this disclosure can be implemented in conjunction with a special purpose computer, a programmed microprocessor or microcontroller and peripheral integrated circuit element(s), an ASIC or other integrated circuit, a digital signal processor, a hard-wired electronic or logic circuit such as discrete element circuit, a programmable logic device or gate array such as PLD, PLA, FPGA, PAL, special purpose computer, any comparable means, or the like. In general, any device(s) or means capable of implementing the methodology illustrated herein can be used to implement the various aspects of this disclosure. Exemplary hardware that can be used for

the disclosed embodiments, configurations and aspects includes computers, handheld devices, telephones (e.g., cellular, Internet enabled, digital, analog, hybrids, and others), and other hardware known in the art. Some of these devices include processors (e.g., a single or multiple microprocessors), memory, nonvolatile storage, input devices, and output devices. Furthermore, alternative software implementations including, but not limited to, distributed processing or component/object distributed processing, parallel processing, or virtual machine processing can also be constructed to implement the methods described herein.

In yet another embodiment, the disclosed methods may be readily implemented in conjunction with software using object or object-oriented software development environments that provide portable source code that can be used on a variety of computer or workstation platforms. Alternatively, the disclosed system may be implemented partially or fully in hardware using standard logic circuits or VLSI design. Whether software or hardware is used to implement the systems in accordance with this disclosure is dependent on the speed and/or efficiency requirements of the system, the particular function, and the particular software or hardware systems or microprocessor or microcomputer systems being utilized.

In yet another embodiment, the disclosed methods may be partially implemented in software that can be stored on a storage medium, executed on programmed general-purpose computer with the cooperation of a controller and memory, a special purpose computer, a microprocessor, or the like. In these instances, the systems and methods of this disclosure can be implemented as program embedded on personal computer such as an applet, JAVA® or CGI script, as a resource residing on a server or computer workstation, as a routine embedded in a dedicated measurement system, system component, or the like. The system can also be implemented by physically incorporating the system and/or method into a software and/or hardware system.

Although the present disclosure describes components and functions implemented in the aspects, embodiments, and/or configurations with reference to particular standards and protocols, the aspects, embodiments, and/or configurations are not limited to such standards and protocols. Other similar standards and protocols not mentioned herein are in existence and are considered to be included in the present disclosure. Moreover, the standards and protocols mentioned herein and other similar standards and protocols not mentioned herein are periodically superseded by faster or more effective equivalents having essentially the same functions. Such replacement standards and protocols having the same functions are considered equivalents included in the present disclosure.

The present disclosure, in various aspects, embodiments, and/or configurations, includes components, methods, processes, systems and/or apparatus substantially as depicted and described herein, including various aspects, embodiments, configurations embodiments, subcombinations, and/or subsets thereof. Those of skill in the art will understand how to make and use the disclosed aspects, embodiments, and/or configurations after understanding the present disclosure. The present disclosure, in various aspects, embodiments, and/or configurations, includes providing devices and processes in the absence of items not depicted and/or described herein or in various aspects, embodiments, and/or configurations hereof, including in the absence of such items as may have been used in previous devices or processes, e.g., for improving performance, achieving ease and\or reducing cost of implementation.

The foregoing discussion has been presented for purposes of illustration and description. The foregoing is not intended to limit the disclosure to the form or forms disclosed herein. In the foregoing Detailed Description for example, various features of the disclosure are grouped together in one or more aspects, embodiments, and/or configurations for the purpose of streamlining the disclosure. The features of the aspects, embodiments, and/or configurations of the disclosure may be combined in alternate aspects, embodiments, and/or configurations other than those discussed above. This method of disclosure is not to be interpreted as reflecting an intention that the claims require more features than are expressly recited in each claim. Rather, as the following claims reflect, inventive aspects lie in less than all features of a single foregoing disclosed aspect, embodiment, and/or configuration. Thus, the following claims are hereby incorporated into this Detailed Description, with each claim standing on its own as a separate preferred embodiment of the disclosure.

Moreover, though the description has included description of one or more aspects, embodiments, and/or configurations and certain variations and modifications, other variations, combinations, and modifications are within the scope of the disclosure, e.g., as may be within the skill and knowledge of those in the art, after understanding the present disclosure. It is intended to obtain rights which include alternative aspects, embodiments, and/or configurations to the extent permitted, including alternate, interchangeable and/or equivalent structures, functions, ranges or steps to those claimed, whether or not such alternate, interchangeable and/or equivalent structures, functions, ranges or steps are disclosed herein, and without intending to publicly dedicate any patentable subject matter.

What is claimed is:

1. A method for providing video-on-demand (VOD) in an intelligent television, the method comprising:

receiving, by a processor of the intelligent television, a first selection for a VOD content;

in response to the first selection, providing, by the processor, a master view of the VOD content, wherein the master view presents two or more collections of the VOD content organized by a characteristic of the VOD content;

receiving, by the processor, a second selection for a VOD content;

in response to the second selection, providing, by the processor, a collection view of VOD content, wherein the collection view presents two or more items of the VOD content having the characteristic;

receiving, by the processor, a third selection for a VOD content;

in response to the third selection, providing, by the processor, either a detail view or a digest view of VOD content, wherein the detail view presents information about a selected item of the VOD content, and wherein the digest view presents information about a set of the VOD content that are associated with a series, wherein providing either a detail view or a digest view of the VOD content comprises:

determining, by the processor, if the selection in the collection view is for a series or one of a movie or single show;

if the selection in the collection view is for a series, providing, by the processor, the digest view; and

if the selection in the collection view is for one of a movie or single show, providing, by the processor, a detail view, wherein a navigation to view VOD

content is an ordered set of user interfaces, and wherein the order includes a master view at a top level, a collection view at a second level, either a digest view or detail view at a third level, and a player view at a fourth and bottom level.

2. An intelligent television system comprising: a memory operable to store video-on-demand (VOD) content;

a processor in communication with the memory, the processor operable to:

execute a user interface application operable to: receive a first selection for a VOD content; in response to the first selection, provide a master view of the VOD content, wherein the master view presents two or more collections of the VOD content organized by a characteristic of the VOD content;

receive a second selection for a VOD content;

in response to the second selection, provide a collection view of the VOD content, wherein the collection view presents two or more items of the VOD content having the characteristic;

receive a third selection for a VOD content; in response to the third selection, provide either a detail view or a digest view of VOD content, wherein the detail view presents information about a selected item of the VOD content, and wherein the digest view presents information about a set of the VOD content that are associated with a series; wherein providing either a detail view or a digest view of the VOD content comprises determine if the selection in the collection view is for a series or one of a movie or single show;

if the selection in the collection view is for a series, provide the digest view, wherein the digest view provides a listing of two or more episodes associated with the series;

if the selection in the collection view is for one of a movie or single show, provide a detail view; receiving a fourth selection of an episode in the digest view; and in response to the fourth selection, providing a player to present the episode to the user; receiving a fifth selection of a user interface device to play the movie or single show; and in response to the fifth selection, providing a player to present the movie or single show to the user; wherein a navigation to view VOD content is an ordered set of user interfaces, and wherein the order includes a master view at a top level, a collection view at a second level, either a digest view or detail view at a third level, and a player view at a fourth and bottom level.

3. The method as defined in claim **1**, wherein the digest view provides a listing of two or more episodes associated with the series.

4. The method as defined in claim **3**, further comprising:

receiving a fourth selection of an episode in the digest view; and

in response to the fourth selection, providing a player to present the episode to the user.

5. The method as defined in claim **4**, further comprising:

receiving a fifth selection of a user interface device to play the movie or single show; and

in response to the fifth selection, providing a player to present the movie or single show to the user.

6. The method as defined in claim **1**, wherein a master view includes at least two user-selectable devices to view a collection view based on one of two or more criteria.

7. The method as defined in claim **6**, wherein the master view includes a navigation bar to select between types of content.

8. The method as defined in claim **7**, wherein the types of content include showcase content, movies content, television series content, or variety content.

9. The method as defined in claim **8**, wherein the master layout includes user-selectable devices for viewing a collection of content based on special topics, newest content, top watched content, recommended content, or favorites content.

10. The intelligent television system as defined in claim **2**, wherein a master view includes at least two user-selectable devices to view a collection view based on one of two or more criteria, wherein the master view includes a navigation bar to select between types of content, wherein the types of content include showcase content, movies content, television series content, or variety content, and wherein the master layout includes user-selectable devices for viewing a collection of content based on special topics, newest content, top watched content, recommended content, or favorites content.

11. A non-transitory computer readable medium having stored thereon processor executable instructions that cause a computing system to execute a method, the instructions comprising:

instructions to receive a first selection for a video on demand(VOD) content; in response to the first selection, instructions to provide a master view of the VOD content, wherein the master view presents two or more collections of the VOD content organized by a characteristic of the VOD content;

instructions to receive a second selection for a VOD content; in response to the second selection, instructions to provide a collection view of VOD content, wherein the collection view presents two or more items of the VOD content having the characteristic; instructions to receive a third selection for VOD content; and

in response to the third selection, instructions to provide either a detail view or a digest view of VOD content, wherein the detail view presents information about a selected item of the VOD content, and wherein the digest view presents information about a set of the VOD content that are associated with a series; wherein providing either a detail view or a digest view of the VOD content comprises; determine if the selection in the collection view is for a series or one of a movie or single show;

if the selection in the collection view is for a series, provide the digest view, wherein the digest view provides a listing of two or more episodes associated with the series;

if the selection in the collection view is for one of a movie or single show, provide a detail view; receiving a fourth selection of an episode in the digest view; and in response to the fourth selection, providing a player to present the episode to the user; receiving a fifth selection of a user interface device to play the movie or single show; and in response to the fifth selection, providing a player to present the movie or single show to the user; wherein a navigation to view VOD content is an ordered set of user interfaces, and wherein the order includes a master view at a top level, a collection view at a second level, either a digest view or detail view at a third level, and a player view at a fourth and bottom level.

12. The computer readable medium as defined in claim **11**, wherein a master view includes at least two user-selectable devices to view a collection view based on one of two or more criteria, wherein the master view includes a navigation

bar to select between types of content, wherein the types of content include showcase content, movies content, television series content, or variety content, and wherein the master layout includes user-selectable devices for viewing a collection of content based on special topics, newest content, top watched content, recommended content, or favorites content.

* * * * *