US006748080B2

(12) **United States Patent**
Russ et al.

(10) **Patent No.: US 6,748,080 B2**
(45) **Date of Patent: Jun. 8, 2004**

(54) **APPARATUS FOR ENTITLING REMOTE CLIENT DEVICES**

(75) Inventors: **Samuel H. Russ**, Lawrenceville, GA (US); **Michael A. Gaul**, Lawrenceville, GA (US); **Anthony J. Wasilewski**, Alpharetta, GA (US); **Howard G. Pinder**, Norcross, GA (US)

(73) Assignee: **Scientific-Atlanta, Inc.**, Lawrenceville, GA (US)

(*) Notice: Subject to any disclaimer, the term of this patent is extended or adjusted under 35 U.S.C. 154(b) by 49 days.

(21) Appl. No.: **10/154,495**

(22) Filed: **May 24, 2002**

(65) **Prior Publication Data**

US 2003/0219127 A1 Nov. 27, 2003

(51) **Int. Cl.**[7] **H04N 7/167**
(52) **U.S. Cl.** **380/239**

(58) **Field of Search** 380/239, 210, 380/211, 232, 240; 725/31; 705/52

(56) **References Cited**

U.S. PATENT DOCUMENTS

5,742,686	A	*	4/1998	Finley	380/28
5,796,829	A	*	8/1998	Newby et al.	705/54
5,872,846	A	*	2/1999	Ichikawa	380/282
5,987,572	A	*	11/1999	Weidner et al.	711/155
2002/0146237	A1		10/2002	Safadi	386/94

* cited by examiner

Primary Examiner—Matthew Smithers

(57) **ABSTRACT**

A master-receiver in a subscriber television network receives service instances and entitlement information from a headend of the subscriber television network and re-transmits service instances to a client-receiver after dynamic encryption scheme determination.

73 Claims, 8 Drawing Sheets

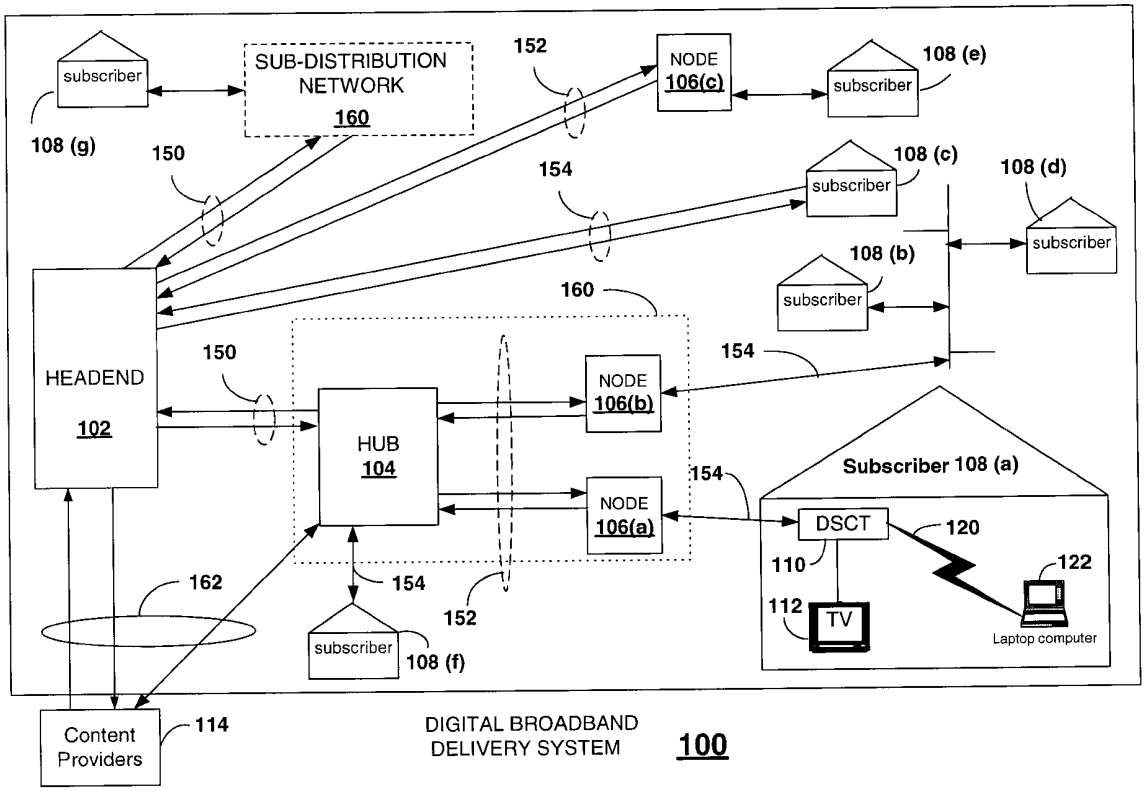

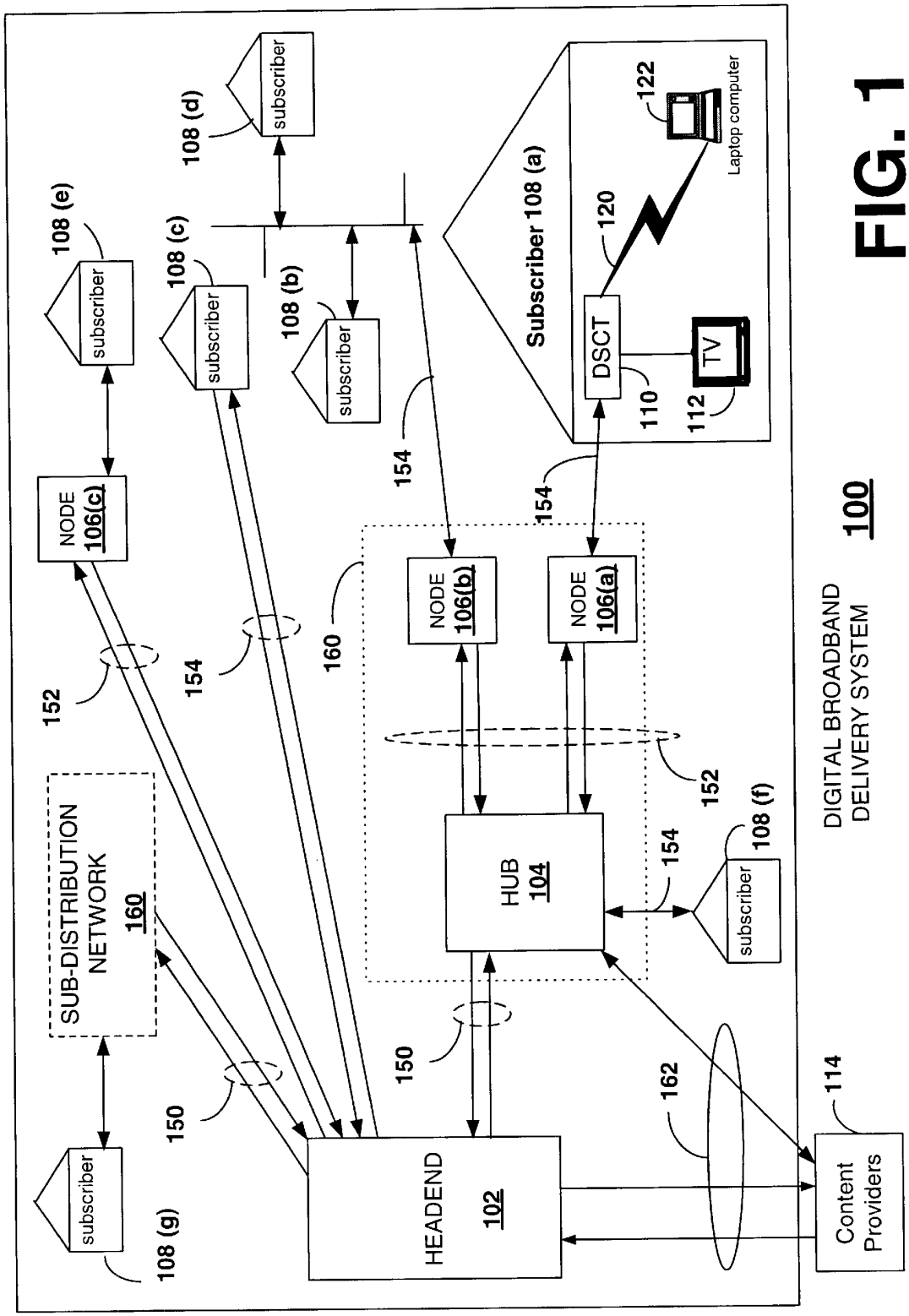
HEADEND
102
HUB
104
NODE
106(a)
NODE
106(b)
NODE
106(c)
SUB-DISTRIBUTION
NETWORK
160
Content
Providers
114
Subscriber 108 (a)
DSCT
110
TV
112
Laptop computer
122
120
subscriber
108 (b)
108 (c)
108 (d)
108 (e)
108 (f)
108 (g)
150
152
154
160
162
DIGITAL BROADBAND
DELIVERY SYSTEM
100

FIG. 1

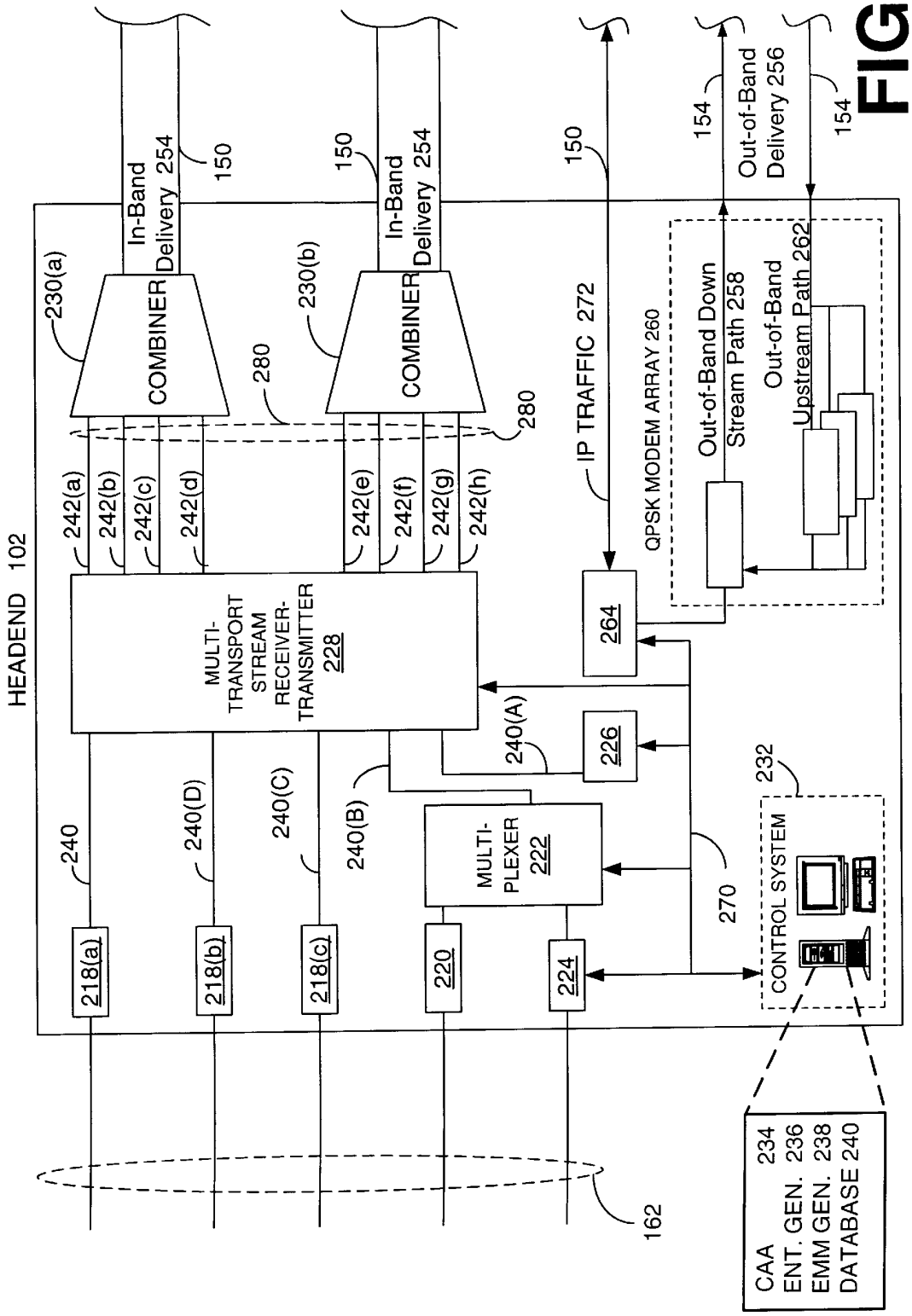
HEADEND 102
In-Band Delivery 254
150
COMBINER
230(a)
230(b)
280
242(a)
242(b)
242(c)
242(d)
242(e)
242(f)
242(g)
242(h)
MULTI-TRANSPORT STREAM RECEIVER-TRANSMITTER 228
IP TRAFFIC 272
QPSK MODEM ARRAY 260
Out-of-Band Down Stream Path 258
Out-of-Band Upstream Path 262
Out-of-Band Delivery 256
154
264
226
240(A)
240(B)
240(C)
240(D)
240
MULTI-PLEXER 222
270
232
CONTROL SYSTEM
218(a)
218(b)
218(c)
220
224
162
CAA 234
ENT. GEN. 236
EMM GEN. 238
DATABASE 240

FIG. 2

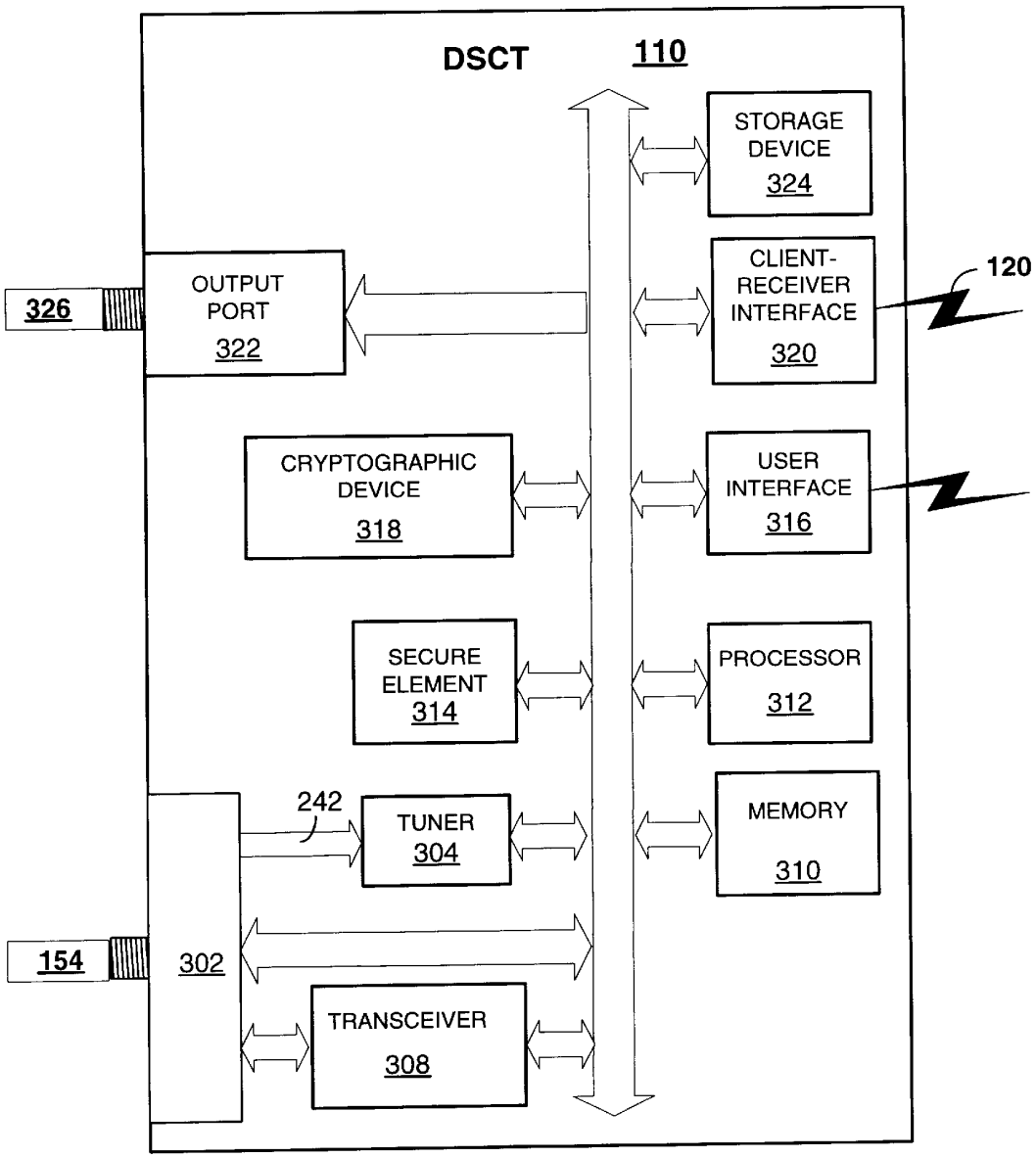
DSCT
110
STORAGE DEVICE 324
CLIENT-RECEIVER INTERFACE 320
120
326
OUTPUT PORT 322
CRYPTOGRAPHIC DEVICE 318
USER INTERFACE 316
SECURE ELEMENT 314
PROCESSOR 312
242
TUNER 304
MEMORY 310
154
302
TRANSCEIVER 308

FIG. 3

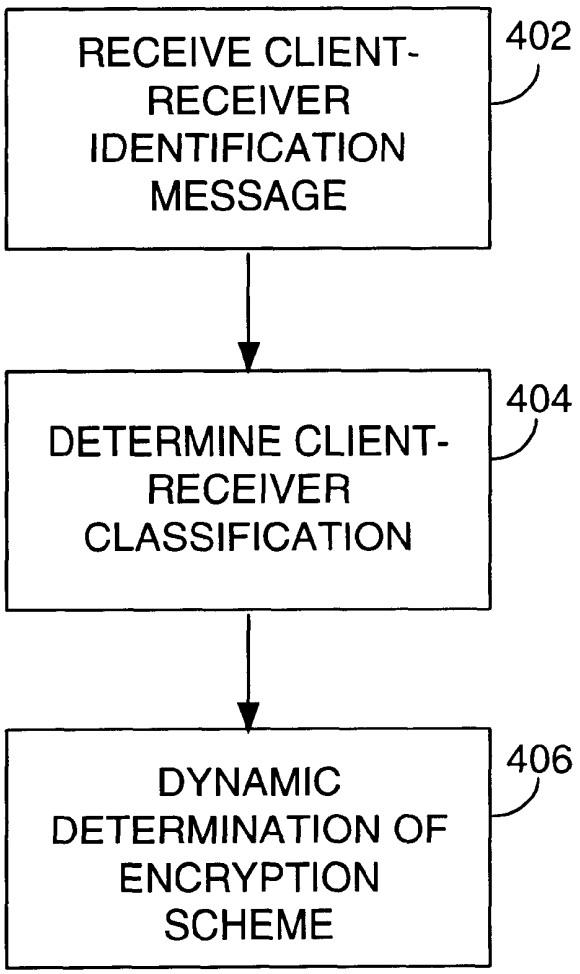
RECEIVE CLIENT-RECEIVER IDENTIFICATION MESSAGE
402
DETERMINE CLIENT-RECEIVER CLASSIFICATION
404
DYNAMIC DETERMINATION OF ENCRYPTION SCHEME
406

FIG. 4

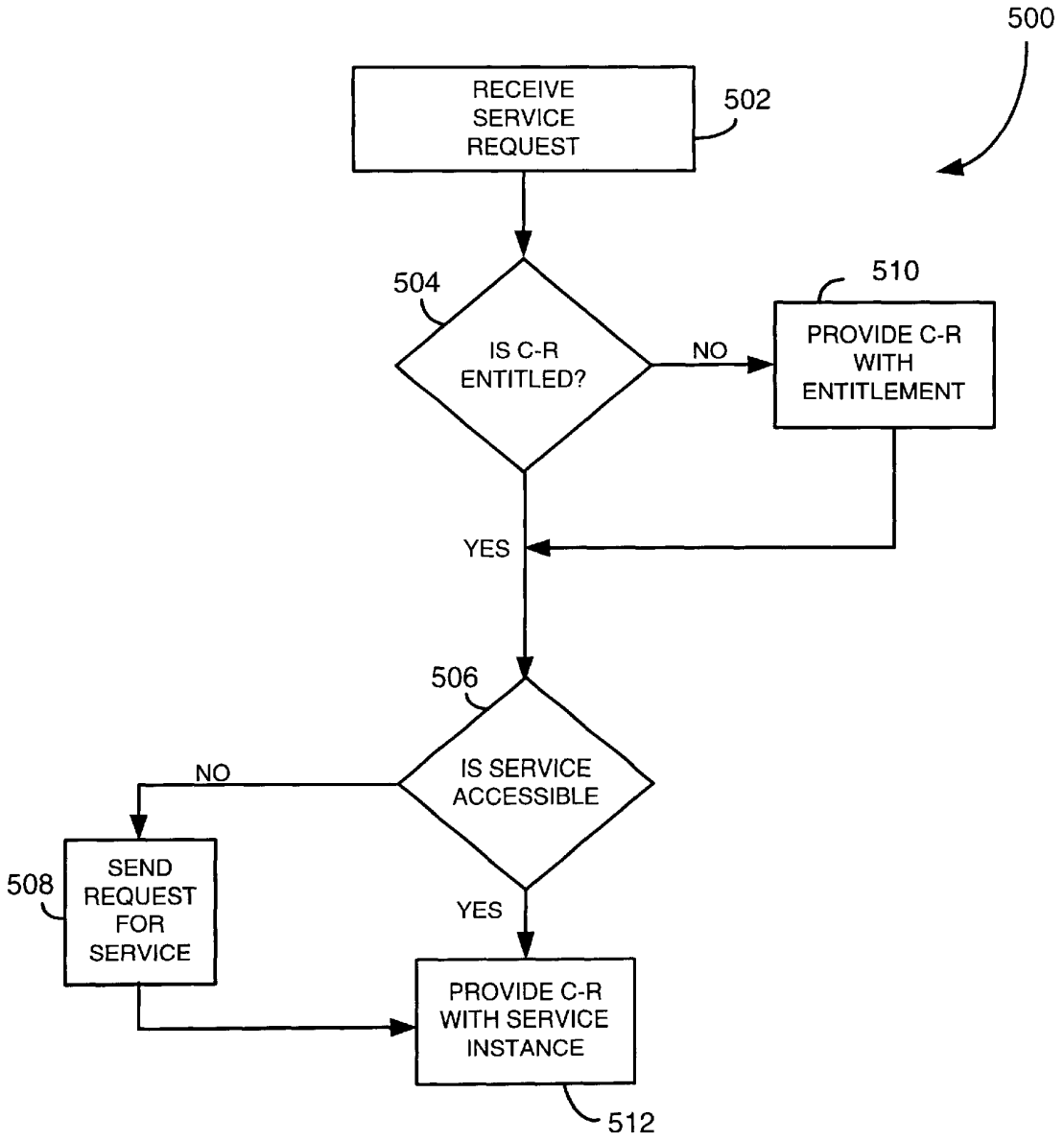
500
RECEIVE SERVICE REQUEST
502
504
IS C-R ENTITLED?
NO
510
PROVIDE C-R WITH ENTITLEMENT
YES
506
IS SERVICE ACCESSIBLE
NO
508
SEND REQUEST FOR SERVICE
YES
PROVIDE C-R WITH SERVICE INSTANCE
512

FIG. 5

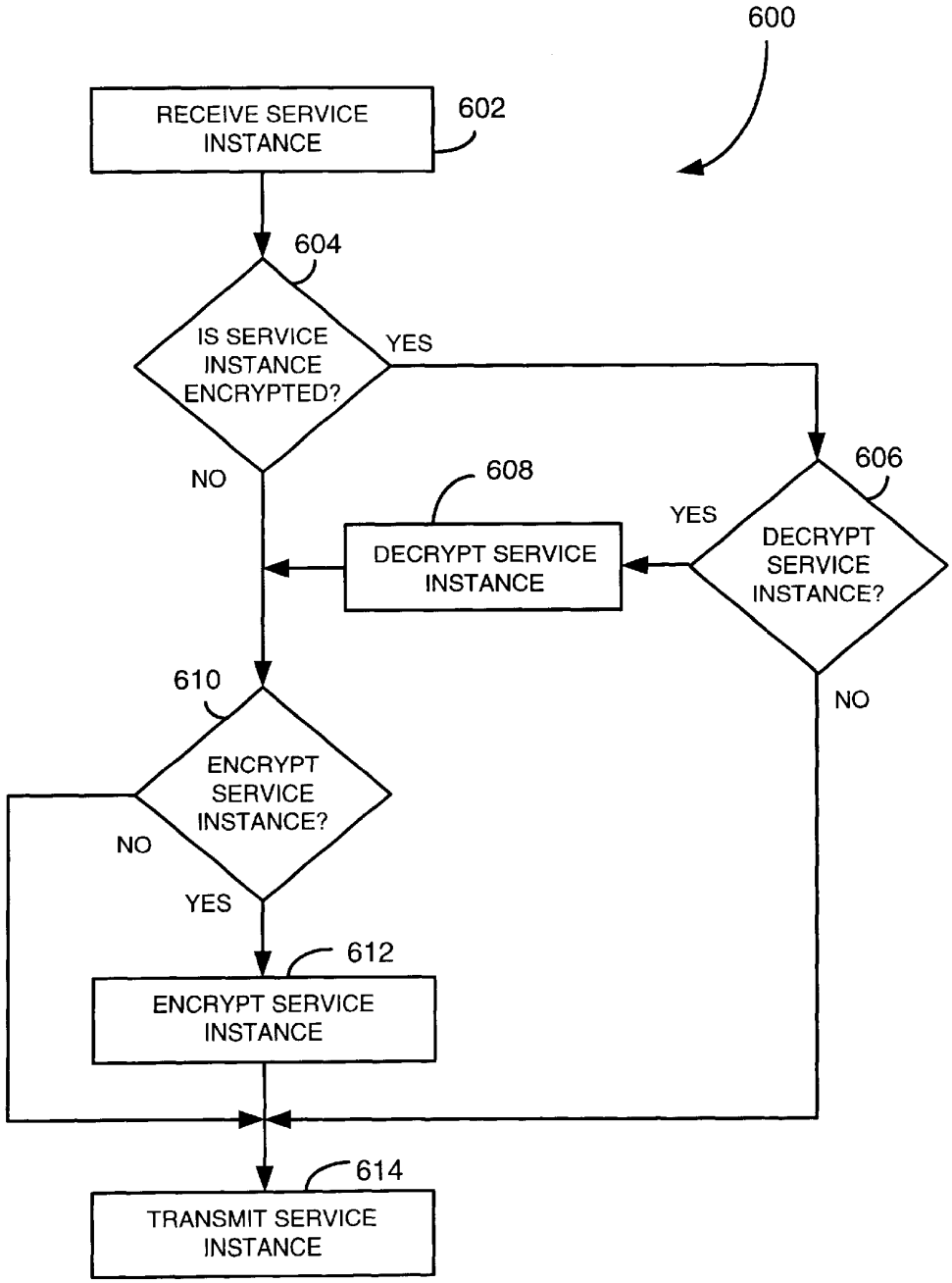
600
RECEIVE SERVICE INSTANCE
602
604
IS SERVICE INSTANCE ENCRYPTED?
YES
NO
606
608
YES
DECRYPT SERVICE INSTANCE
DECRYPT SERVICE INSTANCE?
NO
610
ENCRYPT SERVICE INSTANCE?
NO
YES
612
ENCRYPT SERVICE INSTANCE
614
TRANSMIT SERVICE INSTANCE

FIG. 6

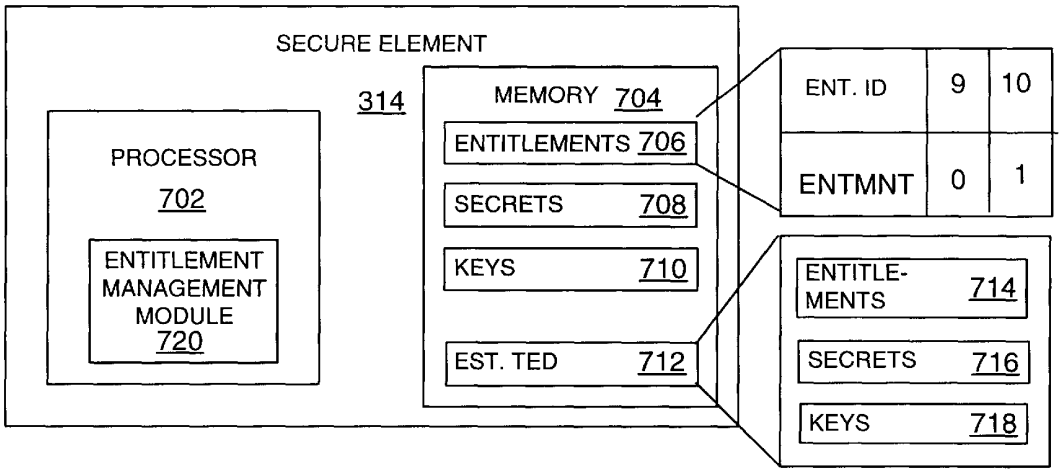

FIG. 7

ENTITLEMENT MANAGEMENT MESSAGE 800			
ADDRESS 802	DATA 808	CONTENT 804	AUTHENTICATION TOKEN 806

FIG. 8A

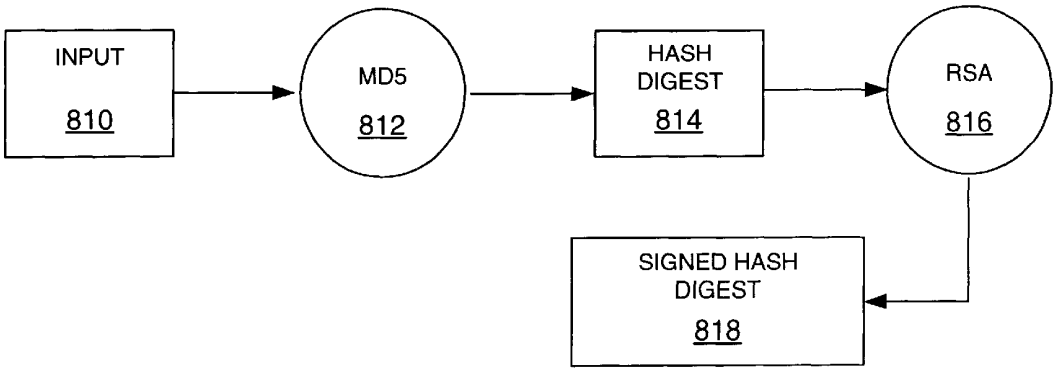

FIG. 8B

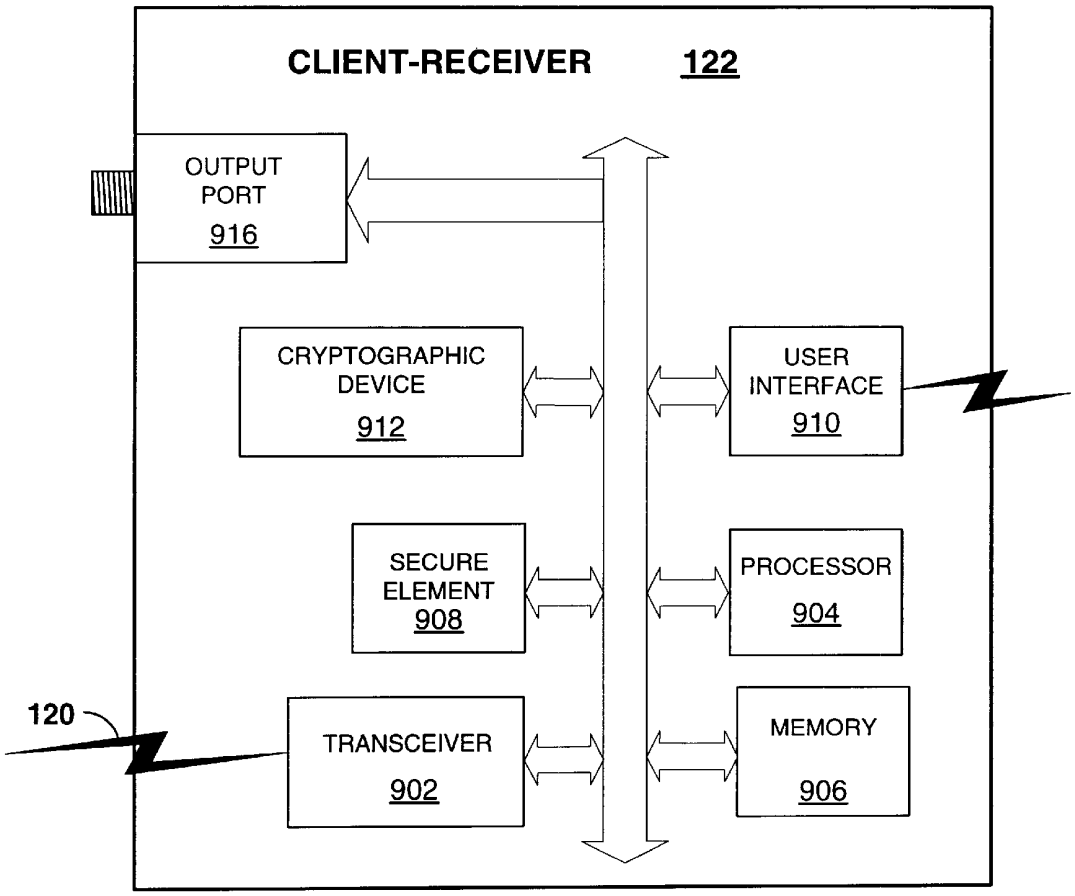
CLIENT-RECEIVER 122
OUTPUT PORT 916
CRYPTOGRAPHIC DEVICE 912
USER INTERFACE 910
SECURE ELEMENT 908
PROCESSOR 904
120
TRANSCEIVER 902
MEMORY 906

FIG. 9

APPARATUS FOR ENTITLING REMOTE CLIENT DEVICES

FIELD OF THE INVENTION

This invention relates generally to communications systems, such as subscriber television systems, among others, and more specifically to entitling devices in the communication systems.

BACKGROUND OF THE INVENTION

Frequently, broadband systems transmit television signals and programs to subscribers of a conditional access system, or a subscriber network system. Broadband systems, such as cable and satellite television systems, typically include a headend for receiving programming and/or data from various sources and redistributing the programming and other data through a distribution system to subscribers. The headend receives programming signals from a variety of sources, such as content providers or entitlement agents, and combines the signals from the various sources, and transmits the combined signals through the distribution system to subscriber equipment. The subscriber network system offers subscribers of the system with services such as, but not limited to, Internet service and telephone service and potentially hundreds of program selections or service instances. Service instances include, but are not limited to, an installment of an audio or visual or audio/visual program. A service instance can be broadcast to all of the subscribers of the conditional access system, a portion of the subscribers, or an individual subscriber. Service instances include regular programming, special programming such as pay-per-view, and subscriber requested services such as personal television.

At a subscriber location, a digital subscriber communications terminal (DSCT) is typically coupled to a coaxial outlet by a short coaxial cable and the coaxial outlet is coupled to the broadband distribution system. Today, there are many subscriber devices such as, but not limited to, smart appliances, laptop computers, personal digital assistants (PDAs), video cassette recorders (VCRs) and televisions that can receive service instances and other information from the subscriber network.

The DSCT and the subscriber devices are sometimes coupled together via a local area network, which can be wired or wireless or a combination thereof. Wired communication paths include, among others, HomePNA 1 and 2, which uses home telephone lines and which has a data transfer rate of up to 1 and 10 Mbps, respectively, HomePlug, which has a data transfer rate of 14 Mbps, and Ethernet. Wired communication has the disadvantage of requiring that a wire extend from the DSCT to the subscriber device, which in an existing subscriber residence may entail retrofitting the residence, and that can be expensive. Therefore, it is frequently desirable to couple subscriber devices to the DSCT using wireless communication, especially with the proliferation of portable computing devices. Wireless communication allows the subscriber to easily move his or her portable computing device, smart appliance, etc., or client-devices, within his or her local wireless network while remaining connected to the subscriber network through the subscriber's DSCT and also eliminating the need to wire multiple rooms with coaxial cable or other wires. Wireless technologies have advanced so that they enable data to be pumped quickly through a wireless connection. The Institute for Electronics and Electrical Engineers (IEEE) 802.11b standard enables the user to transfer data at a rate approximately equal to Ethernet data rates, about 10 Mbps. As such it is sometimes called wireless Ethernet. IEEE 802.11a enables transfer rates of up to 54 Mbps. Industry collaboration, Bluetooth 2.0 enables users to transfer data at a rate of about 10 Mbps. HomeRF 2.0 is another industry collaboration, backed by a few of the same companies promoting the Bluetooth standard, and like Bluetooth 2.0, has a maximum data transfer rate of about 10 Mbps.

However, local area networks introduce security and control concerns for the operators of the subscriber network system. Thus, there exists a need for a system that addresses these concerns.

BRIEF DESCRIPTION OF THE DRAWINGS

FIG. **1** is a block diagram of a broadband communications system, such as a cable television system, in which the preferred embodiment of the present invention may be employed.

FIG. **2** is a block diagram of a headend in the broadband communication system in which the preferred embodiment of the present invention may be employed.

FIG. **3** is a block diagram of the digital subscriber communication terminal.

FIG. **4** is a flow chart of steps taken to dynamically establish an encryption scheme.

FIG. **5** is a flow chart of steps taken in determining whether to provide a service instance to a client-device.

FIG. **6** is a flow chart of steps taken to provide a service instance to a client-device.

FIG. **7** is a block diagram of a secure element.

FIG. **8**A is a block diagram of an entitlement management message.

FIG. **8**B is a block diagram representing making an authentication token used in the entitlement management message.

FIG. **9** is a block diagram of a client-receiver.

DETAILED DESCRIPTION OF PREFERRED EMBODIMENTS

Preferred embodiments of the present invention will be described more fully hereinafter with reference to the accompanying drawings in which like numerals represent like elements throughout the several figures, and in which an exemplary embodiment of the invention is shown. The present invention may, however, be embodied in many different forms and should not be construed as limited to the embodiments set forth herein. The examples set forth herein are non-limiting examples and are merely examples among other possible examples.

The operator of a subscriber network system desires the ability to entitle (or disentitle) subscriber devices, i.e., to enable (or prevent) the subscriber devices from accessing communication transmitted over a local area network, which may include wired communication links, wireless communication links, or a combination thereof. In addition, the operator wants to be able to securely communicate information from a DSCT to the subscriber devices, but wireless networks pose additional concerns for the operator. Because communication signals over wireless links are more readily intercepted than signals over wired links, wireless communication links are inherently less secure. Furthermore, the operator wants the capability to control the type of devices

that receive information from the DSCT or the type of content that the device receives. For example, the operator may allow a personal computer to receive some information such as email but prevent the personal computers from receiving a program that is in a digital format. Thus, the operators desire an apparatus that can provide the client-devices with entitlements to access received service instances, establish secure communication with the client-devices, and control the content that is provided to the client-devices.

The preferred embodiments of the present invention are described in the context of a DSCT in a subscriber television network. However, it is to be understood that such a context is merely one example context among others. As will be described in greater detail hereinbelow, the subscriber television network includes a headend that receives content and transmits the content to the DSCT. At the subscriber location, a client-device is coupled to the DSCT, and the DSCT dynamically determines an encryption scheme for transmitting content to the client-receiver. The DSCT transmits content to the client-device via wired or wireless communication paths.

The logic of the preferred embodiment(s) of the present invention can be implemented in hardware, software, firmware, or a combination thereof. In the preferred embodiment(s), the logic is implemented in software or firmware that is stored in a memory and that is executed by a suitable instruction execution system. If implemented in hardware, as in an alternative embodiment, the logic can be implemented with any or a combination of the following technologies, which are all well known in the art: a discrete logic circuit(s) having logic gates for implementing logic functions upon data signals, an application specific integrated circuit (ASIC) having appropriate combinational logic gates, a programmable gate array(s) (PGA), a field programmable gate array (FPGA), etc. In addition, the scope of the present invention includes embodying the functionality of the preferred embodiments of the present invention in logic embodied in hardware or software-configured mediums.

Any process descriptions or blocks in flow charts should be understood as representing modules, segments, or portions of code which include one or more executable instructions for implementing specific logical functions or steps in the process, and alternate implementations are included within the scope of the preferred embodiment of the present invention in which functions may be executed out of order from that shown or discussed, including substantially concurrently or in reverse order, depending on the functionality involved, as would be understood by those reasonably skilled in the art of the present invention. In addition, the process descriptions or blocks in flow charts should be understood as representing decisions made by a hardware structure such as a state machine known to those skilled in the art.

A description of a subscriber television system is provided hereinbelow. First an overview of a subscriber television system is given, then a description of the functionality and components of the headend is provided, and then a description of the functionality and components of a DSCT and a client-receiver at a subscriber location is given. Non-limiting embodiments of the present invention are described in the context of a DSCT located at the subscriber's location.

Subscriber Television System Overview

In this discussion, a two-way interactive digital subscriber television system or a digital subscriber network is also referred to as a Digital Broadband Delivery System (DBDS). An overview of an exemplary DBDS is provided in U.S. Pat. No. 6,157,719, entitled "Conditional Access System", which is hereby incorporated by reference herein in its entirety. A function of the DBDS is to: provide interfaces to content providers, service providers and entitlement agents; control access to and the use of the content and services; and to distribute the content and services to subscribers. For the purposes of this disclosure, an entitlement agent is an entity that provides the subscribers of the DBDS with entitlements for services and content associated with the entitlement agent. The content providers and services providers may not want to be in the business of managing entitlements for the subscribers of the DBDS. In that case, the content and services from the content and service providers are associated with the entitlement agent and the entitlement agent provides the subscribers with the entitlements for the associated content and services. In addition, services and content associated with an entitlement agent include services and content provided to the DBDS by the entitlement agent.

The subscriber network system offers subscribers of the system services such as, but not limited to, Internet service and telephone service and potentially hundreds of program selections or service instances. Service instances include, but are not limited to, an installment of an audio or visual or audio/visual program. A service instance can be broadcast to all of the subscribers of the conditional access system, a portion of the subscribers, or an individual subscriber. Service instances include regular programming, special programming such as pay-per-view, and subscriber requested services such as personal television.

The distribution system can include a variety of media, which can handle multiple in-band signals. Typically, in a subscriber system, such as a cable television system, the in-band signals are 6 MHz wide, which correspond to the bandwidth used to transmit a conventional analog television program. Today, many programs and service instances are transmitted in a digital format, such as, but not limited to, motion picture experts group (MPEG).

MPEG Programming

In a digital format, a program is encoded into its elementary parts, such as video, audio, etc. Frequently, a program can use more than one audio track so that the program can be heard in several different languages such as English, French, or German, and each audio track is an elementary stream of the program. The program is further encoded so that the elementary parts are packetized into multiple packets. MPEG is a common format used for packetizing a digital program. A packet identifier (PID) identifies each of the packets, and all of the packets that make up an elementary part of the program have the same PID values. For example, all of the video packets might have the PID value of 251 and, all of the English audio packets might have a PID value of 255, etc.

In a conventional analog system, only one analog program is transmitted through a 6 MHz wide pipe, but a 6 MHz wide pipe can carry a transport stream that includes several multiplexed digital programs. The packets of a digital program are transmitted in a transport stream, which is a continuous stream of packets. Generally, the transport stream is made up of multiple programs or service instances that are multiplexed together. The transport stream is made up of elementary streams or PID streams, which are streams of packets having the same PID values. Each PID stream of the transport stream has a unique value, so that a given PID stream is part of only one program. The packets of a program are transmitted in a synchronized manner, such that the

packets of the program are received at the appropriate time so that the video and audio are synchronized when the program is viewed. For the purposes of this disclosure, a digital transport stream is described in terms of an MPEG transport stream, but this is for exemplary purposes only.

In an MPEG transport stream, the PID values range from 0 to 8,191. Certain PID values such as zero and 8,191 are reserved and are assigned to packets having specific information or functions. For example, stuffing packets, which are assigned the PID value of 8,191, are filler packets that are inserted into the transport stream when there are no other packets available for transmission. Program association tables (PATs) are assigned the PID value of zero, and are used to map programs to their program map tables (PMTs). (Each program of a transport stream has a unique program number.) For example, a program such as "The Dirty Dozen " can have the program number of 15, and in that case, the PAT maps program number 15 to a PMT, such as PMT **256**. The PMT **256** is the packet of the transport stream that has the PID value 256, and PMT **256** maps the elementary streams of program 15 to their PID streams. For example, PMT **256** maps the video stream of "The Dirty Dozen" to PID stream **262**, and English audio stream to PID stream **263**.

MPEG as referenced in this application is described in the MPEG-1, MPEG-2 and MPEG-4 standards. The MPEG-1 standards (ISO/IEC 11172), the MPEG-2 standards (ISO/IEC 13818) and the MPEG-4 standards (ISO/IEC 14496) are described in detail in the International Organization for Standardization document ISO/IEC JTC1/SC29/WG11 N (June 1996 for MPEG-1, July 1996 for MPEG-2, and October 1998 for MPEG-4), which is hereby incorporated by reference.

Subscriber Television Network

Referring to FIG. **1**, a digital broadband distribution system (DBDS) **100** includes, in one example among others, a headend **102**, a plurality of hubs **104**, multiple nodes **106**, a plurality of subscriber locations **108**, and a plurality of digital subscriber communication terminals (DSCTs) **110**. The headend **102** provides the interface between the DBDS **100** and content and service providers **114**, or entitlement agents, such as broadcasters, internet service providers, and the like via communication link **162**. The transmission medium **162** between the headend **102** and the content and service providers **114** can be two-way. This allows for two-way interactive services such as Internet access via DBDS **100**, video-on-demand, interactive program guides, etc. In the preferred embodiment, the hubs **104** are also in direct two-way communication with the content and service providers **114** via communication link **162** for providing two-way interactive services.

In the preferred embodiment, the headend **102** is in direct communication with the hubs **104** via communication link **150**. In addition, the headend **102** is in direct communication with the nodes **106** via communication link **152** and in direct communication with the subscriber locations **108** via communication link **154**. Whether or not the headend **102** is in direct communication with subscriber locations **108** is a matter of implementation. In an alternative embodiment, the headend **102** is in direct communication with hubs **104** and nodes **106** and in direct communication with subscriber locations **108**.

The hub **104** receives programming and other information, which is typically in a protocol such as ATM or Ethernet, from headend **102** via transmission medium **150**. The hub **104** transmits information and programming via transmission medium **152** to nodes **106**, which then transmit the information to subscriber locations **108** through transmission medium **154**. Whether the hub **104** communicates directly to subscriber locations **108** or to nodes **106** is matter of implementation, and in the preferred embodiment, the hub **104** is also adapted to transmit information and programming directly to subscriber locations **108** via transmission medium **154**.

In the preferred embodiment, the transmission medium **150** and **152** are optical fibers that allow the distribution of high quality and high-speed signals, and the transmission medium **154** is either broadband coaxial cable or optical fiber. When the communication path from the headend **102** to the DSCT **110** includes a combination of coaxial cable and optical cable, the communication path is frequently referred to as a hybrid fiber coax (HFC) communication path. In alternative embodiments, the transmission media **150**, **152** and **154** can include one or more of a variety of media, such as optical fiber, coaxial cable, satellite, direct broadcast, terrestrial digital, Multichannel Multipoint Distribution System (MMDS) or other transmission media known to those skilled in the art. Typically, the transmission media **150**, **152** and **154** are two-way communication media through which both in-band and out-of-band information are transmitted. Through the transmission media **150**, **152**, and **154** subscriber locations **108** are in direct or indirect two-way communication with the headend **102** and/or the hub **104**. Typically, when the DSCT **110** is in satellite communication with the headend **102**, the communication path is one-way from the headend **102** to the DSCT **110**. However, in an alternative embodiment, the DSCT **110** and the headend **102** are in two-way communication via a telephone network (not shown).

The hub **104** functions as a mini-headend for the introduction of programming and services to sub-distribution network **160**. The sub-distribution network **160** includes hub **104** and the plurality of nodes **106** connected to hub **104**. Having a plurality of hubs **104** that function as mini-headends facilitates the introduction of different programming, data and services to different sub-distribution networks of DBDS **100**. For example, the subscriber location **108**(*b*), which is connected to node **106**(*b*), can have different services, data and programming available than the services, data and programming available to subscriber location **108**(*c*), which is connected directly to headend **102**, even though the subscriber locations **108**(*b*) and **108**(*c*) may be in close physical proximity to each other. Services, data and programming for subscriber location **108**(*b*) are routed through hub **104** and node **106**(*b*); and hub **104** can introduce services, data and programming into the DBDS **100** that are not available through the headend **102**.

At the subscriber locations **108** a decoder or a DSCT **110** provides the two-way interface between the DBDS **100** and the subscriber. The DSCT **110** decodes and further process the signals for display on a display device, such as a television set (TV) **112** or a computer monitor, among other examples. Those skilled in the art will appreciate that in alternative embodiments the equipment for first decoding and further processing the signal can be located in a variety of equipment, including, but not limited to, a DSCT, a computer, a TV, a monitor, or an MPEG decoder, among others.

Secure communication between the headend **102** and the DSCTs **110** is preferably accomplished using pairs of asymmetrical keys known to those skilled in the art, such as Rivest, Shamir, & Adleman (RSA) public key encryption technology. Briefly described, an asymmetrical key pair includes a public key, which is distributed to the public, and

a private key, which is not distributed. Content that is encrypted with a public key can only be decrypted using the corresponding private key. A message that is signed with a private key is authenticated with the corresponding public key. The headend **102** and the DSCT **110** can securely communicate after they have exchanged public keys.

The headend **102** includes a database (not shown) that has the public key of each DSCT **110** in the DBDS **100**. The headend **102** can securely communicate with a particular DSCT **110** by encrypting the content of a message using the public key of the particular DSCT **110**. Only the particular DSCT **110** that has the corresponding private key can decrypt the content of the message. The private key of the headend **102** can also sign the message, and in that case the DSCT **110** uses the public key of the headend **102** to authenticate the message. For details regarding cryptography that a reasonably skilled person would understand see, Bruce Schneier, "Applied Cryptography", John Wiley & Sons, 1994. The DSCT **110** can also communicate with the headend **102** using public key-private key cryptography.

In the preferred embodiment, when the DSCT **110** is manufactured it is assigned a serial number, and it is provided with its own private key-public key pair and with a public key of an access controlling authority. The keys are provided to the DSCT **110** in a secure manner and stored in a protected memory in the DSCT **110**. The manufacturer of the DSCT maintains a database that includes the public keys and the serial numbers of each of the DSCTs **110** that the manufacturer produces. Each DSCT **110** in the DBDS **100** has a unique serial number, and the serial number, which can be the MAC address of the DSCT **110**, is used for addressing messages to the DSCT **110**. The manufacturer provides a copy of the public key and the serial number of each DSCT **110** in the DBDS **100** to the operator of the DBDS **100**. In that case, the manufacturer is a key certification authority that certifies to the operator of the DBDS **100** that a given public key belongs to a specific DSCT **110**. The operator of the DBDS **100** maintains its database of public keys and serial numbers of each DSCT **110** in the DBDS **100**.

In the preferred embodiment, the DSCT **110** is provided with multiple public keys during its manufacture. Because these keys were given to the DSCT **110** during its manufacture in a secure fashion, the DSCT **110** implicitly trusts these keys. The DSCT **110** trusts any message that is signed by a private key corresponding to one of these trusted public keys. At least one of the trusted public keys can be replaced by a different public key, which then becomes a trusted public key. To replace a trusted key the DSCT **110** receives at least two messages with a new trusted public key included therein. A private key corresponding to one of the trusted public keys that are not being replaced signs each of the messages. The DSCT **110** uses its trusted public keys to verify that the messages were signed by one of the corresponding private keys. The DSCT **110** only replaces one of its trusted public keys when the message is verified.

Before the DSCT **110** receives and accesses service instances from the headend **102**, the DSCT **110** is registered with the headend **102** and entitled to the service instances. When the DSCT **110** is connected to the DBDS **100**, it sends a message, which includes the serial number of the DSCT **110**, to the headend **102**. The operator of the DBDS **100** compares the serial number of the DSCT **110** against its database and registers the DSCT **110** if the database includes the serial number of the DSCT **110**. Generally, the operator of the DBDS **100** replaces one of the trusted public keys of the DSCT **110** with its own trusted public key. This is accomplished by having the manufacturer of the DSCT **110** digitally sign two messages, which include the new trusted public key, for the DSCT **110** and then sending the two messages to the DSCT **110**.

In one preferred embodiment, the operator of the DBDS **100** acts as the access controlling authority that controls access to the subscriber network. In another embodiment, among others, the manufacturer of the DSCT **110** acts as the access controlling authority. There is conditional access authority (CAA) logic implemented in the headend **102** that the access controlling authority uses for controlling access to the DBDS **100**. The conditional access authority sends the DSCT **110** a secure message such as an entitlement management message (EMM), which is digitally signed by a private key of the conditional access authority. For the purposes of this disclosure, a secure message includes, as a non-limiting example, a message that has been digitally signed by the sender so that the recipient can verify the source of the message and verify that the content of the received message was not tampered with nor corrupted in transmission. The content of a secure message may be encrypted when the sender wants to make the content private or the content can be transmitted without encryption.

In the preferred embodiment, the private key of the conditional access authority corresponds to one of the trusted public keys of the DSCT **110**. The DSCT **110** authenticates the EMM using the trusted public key of the conditional access authority and acts upon the EMM only if the EMM is authenticated as having come from the conditional access authority. Among other things, the conditional access authority uses EMMs to instruct the DSCT **110** to allocate a portion of its memory for entitlement information related to a service instance provided by an entitlement agent and to provide the DSCT **110** with the public key for an entitlement agent. The memory of the DSCT **110** is partitionable so that it can contain entitlement information for service instances from multiple entitlement agents and public keys from each of those entitlement agents.

The DSCT **110** is preferably in communication with client-receiver **122** via communication link **120**. In the preferred embodiment, the communication link **120** is wireless such as, but not limited to, Institute for Electronics and Electrical Engineers (IEEE) standards 802.11a, 802.11b, 802.11g, HiperLAN/2, HomeRF 2, Bluetooth 2, and 802.15.3. In alternative embodiments, the DSCT **110** is in communication with multiple client-receivers via one or more communication links, such as, but not limited to, twisted-wire or Ethernet, telephone line, electrical power line and coaxial cable.

The client-receiver **122** is in two-way communication with the DSCT **110** and receives information and service instances therefrom. In one embodiment, the DSCT **110** acts as a proxy for the client-receiver **122**, and in that case, the headend **102** transmits service instances and messages to the DSCT **110**, which then processes the service instances before re-transmitting them to the client-receiver **122**. In this embodiment, the headend **102** may or may not be aware of the client-receiver **122**. Because the DSCT **110** proxies for the client-receiver **122**, the headend **102** need only communicate with the DSCT **110**. In another embodiment, the client-receiver **122** is acknowledged by the headend **102**, and the headend **102** communicates with the client-receiver **122** through the DSCT **110**. The DSCT **110** still processes messages communicated between the headend **102** and the client-receiver **122**, but in this embodiment, the DSCT **110** acts as a facilitator, not as a proxy, for the client-receiver **122**. For example, in one embodiment, the DSCT **110** authenticates and when necessary decrypts messages from

the headend **102** that are addressed to the client-receiver **122**. In another embodiment, the DSCT **110** is a gateway for the client-receiver **122** and merely passes communication between the client-receiver **122** and the headend **102**. In yet another embodiment, the DSCT **110** decrypts messages and other information from the headend **102** and re-encrypts them for the client-receiver **122**.

In the preferred embodiment, the local network at the subscriber location **108** is self-aware. When a new client-receiver **122** is brought into the local network, the client-receiver **122** discovers the network and communicates with the DSCT **110**. In one embodiment, the client-receiver **122** and the DSCT **110** communicate via a standard such as Open Server Gateway interface (OSGi). Other non-limiting embodiments include communicating via Universal Plug and Play (UPnP), Home Audio Video Interoperability (HAVi) and Jini. The choice of a communication protocol is a matter of implementation and factors for choosing the communication protocol include the type of communication link coupling the DSCT **110** to the client-receiver **122** and the type of client-receiver **122**. The client-receiver **122** can be any smart appliance including, but not limited to, a laptop computer, a computer, a personal digital assistant (PDA), VCR, another DSCT **110**, or television, or the like, adapted to receive information or a service instance from the subscriber network system.

Headend

Referring to FIG. **2**, in a typical system of the preferred embodiment of the invention, the headend **102** receives content from a variety of input sources, which can include, but are not limited to, a direct feed source (not shown), a video camera (not shown), an application server (not shown), and other input sources (not shown). The input signals are transmitted from the content providers **114** to the headend **102** via a variety of communication links **162**, which include, but are not limited to, satellites (not shown), terrestrial broadcast transmitters (not shown) and antennas (not shown), and direct lines (not shown). The signals provided by the content providers, or entitlement agents, can include a single program or a multiplex of programs.

The headend **102** generally includes a plurality of receivers **218** that are each associated with a content source. Generally, the content is transmitted from the receivers **218** in the form of transport stream **240**. MPEG encoders, such as encoder **220**, are included for digitally encoding content such as local programming or a feed from a video camera. Typically, the encoder **220** produces a variable bit rate transport stream. Prior to being modulated, some of the signals may require additional processing, such as signal multiplexing, which is preformed by multiplexer **222**.

A switch, such as asynchronous transfer mode (ATM) switch **224**, provides an interface to an application server (not shown). There can be multiple application servers providing a variety of services such as, among others, a data service, an Internet service, a network system, or a telephone system. Service and content providers **114** (shown in FIG. **1**) may download content to an application server located within the DBDS **100** or in communication with DBDS **100**. The application server may be located within headend **102** or elsewhere within DBDS **100**, such as in a hub **104**.

Typically, the headend **102** includes a server such as a video-on-demand (VOD) pump **226**. VOD pump **226** provides video and audio programming such as VOD pay-per-view programming to subscribers of the DBDS **100**. Usually, the content from VOD pump **226** is provided in the form of the transport stream **240**.

The various inputs into the headend **102** are then combined with the other information, which is specific to the DBDS **100**, such as local programming and control information. The headend **102** includes a multi-transport stream receiver-transmitter **228**, which receives the plurality of transport streams **240** and transmits a plurality of transport streams **242**. In the preferred embodiment, the multi-transport stream receiver-transmitter **228** includes a plurality of modulators, such as, but not limited to, Quadrature Amplitude Modulation (QAM) modulators, that convert the received transport streams **240** into modulated output signals suitable for transmission over transmission medium **280**.

In the preferred embodiment, the output transport streams **242** have a bandwidth of 6 MHz centered upon a frequency that is predetermined for each transport stream **242**. The frequency for a given transport stream **242** is chosen such that the given transport stream will not be combined with another transport stream at the same frequency. In other words, only transport streams that are modulated at different frequencies can be combined, and therefore, the frequencies of transport streams **242**A–D must be different from each other because combiner **230**A combines them. The transport streams **242** from the multi-transport stream receiver-transmitters **228** are combined, using equipment such as combiner **230**, for input into the transmission medium **150**, and the combined signals are sent via the in-band delivery path **254** to subscriber locations **108**.

A system controller, such as control system **232**, which preferably includes computer hardware and software providing the functions discussed herein, allows the DBDS system operator to control and monitor the functions and performance of the DBDS **100**. The control system **232** interfaces with various components, via communication link **270**, in order to monitor and/or control a variety of functions, including the channel lineup of the programming for the DBDS **100**, billing for each subscriber, and conditional access for the content distributed to subscribers. Control system **232** provides input to the multi-transport stream receiver-transmitter **228** for setting its operating parameters, such as system specific MPEG table packet organization or conditional access information among other things.

The control system **232** includes database **240** and logic for conditional access authority (CAA) **234**, entitlement generator **236** and EMM generator **238**. Database **240** includes, among other things, the serial numbers and public keys of the DSCTs **110** of DBDS **100**. The EMM generator **238** uses database **240** to generate individually addressable EMM templates. The EMM generator **238** can also generate EMM templates for multiple DSCTs **110** and/or global EMM templates.

The CAA **234** is used by the access controlling authority to enable DSCTs **110** to receive entitlements for service instances. The CAA **234** receives EMM templates from the EMM generator **238** and uses the EMM template to create an EMM. To create an EMM, the CAA **234** includes a message content and an authentication token in the EMM template. The CAA **234** determines whether the message content should be encrypted, and if so, the CAA **234** encrypts the message content using the public key of the recipient of the EMM, which is retrieved from the database **240**. The authentication token of an EMM is generally a one-way hash digest of the message content that has been digitally signed by the private key of the CAA **234**. In the preferred embodiment, the recipient, i.e., the DSCT **110**, implicitly trusts any EMM that has an authentication token from the CAA **234** because the CAA **234** signs the hash digest with the private key that corresponds to one of the trusted public keys stored in the DSCT **110**.

A one-way secure hash function is a cryptographic operation where input is run through some mathematical opera-

tions to produce an output, the hash digest, which is a fixed length and which is probably unique. The hash digest has at least two properties: (1) determining the input to the hash function, given the hash digest, is virtually impossible or at least computationally difficult; and (2) a hash digest for an input is essentially unique. In other words, the probability that two different inputs will result in the same output is extremely small. All of the hash digests discussed in this disclosure are generated from secure one-way hash functions, and a signed hash digest is a hash digest that has been processed by a private key. Signing the hash digest with a private key converts the hash digest from a first value to a second value, and resigning the second value with the corresponding public key transforms it back to the first value. The only way to convert the second value back to the first value is to resign the second value with the public key that corresponds to the private key that originally signed the hash digest.

In the preferred embodiment, the DSCT **110** includes partitionable memory and the CAA **234** partitions the memory of the DSCT **110** using EMMs. The DSCT **110** only partitions its memory in response to EMMs from the CAA **234**. The CAA **234** instructs the DSCT **110** to allocate a portion of its memory to the entitlement generator **236** and provides the DSCT **110** with the public key of the entitlement generator **236**. Once the DSCT **110** has the public key of the entitlement generator **236**, the entitlement generator **236** can securely communicate with the DSCT **110**, and thereby provide entitlements for service instances to the DSCT **110**. The CAA **234** can also disable the entitlement generator **236** by having the DSCT **110** unallocate the allocated memory. For details regarding allocating and configuring memory in the DSCTs, see U.S. Pat. No. 5,742,677, Pinder et al., Information Terminal Having Reconfigurable Memory, filed Apr. 3, 1995, which is hereby incorporated by reference in its entirety.

The entitlement generator **236** generates encryption information and the entitlements of the DSCTs for the service instances. The entitlement generator **236** provides the encryption information to the multi-transport stream transceiver **228**, which generates control words therefrom for encrypting the service instances. In the preferred embodiment, the encryption information is a multi-session key (MSK), which has a relatively long life, such as days, weeks, or months. The MSK is transmitted to the DSCTs **110** in EMMs created by the entitlement generator **236**.

The entitlement generator **236** receives EMM templates from the EMM generator **238** for creating EMMs. The EMMs from the entitlement generator **236** also include an authentication token, which is a hash digest digitally signed by the private key of the entitlement generator **236**, and the hash digest is a digest of the message content. In some situations, the entitlement generator **236** produces a hash digest of at least a portion of the message content and a secret that is known to the recipient. The entitlement generator **236** determines whether to encrypt the message content and when it is determined to do so, it uses the recipient's private key to encrypt the message content. Typically, when the message content is determined to be private, such as when the content includes an MSK, it is encrypted.

In an alternative embodiment, the system controller **232** includes a main computer and a plurality of transaction encryption devices, which are coupled to the main computer via a secure link, such as a secure dedicated Ethernet connection. Each transaction encryption device includes a processor and a memory for implementing cryptographic algorithms. In this embodiment, the CAA **234** resides in a first transaction encryption device and an entitlement generator **236** resides in each of the remaining transaction encryption devices. Each of the transaction encryption devices that have an entitlement generator are associated with either an entitlement agent or a content provider. An entitlement agent or content provider can use his or her associated transaction encryption device to provide entitlements to the DSCTs **110**. In this manner, multiple entitlement agents or content providers can provide content to the DBDS **100**, and the operator of the DBDS **100** can delegate the responsibility of providing entitlements to the entitlement agents or content providers.

Control information such as EMMs and other data can be communicated to DSCTs **110** via the in-band delivery path **254** or to DSCTs **110** connected to the headend **102** via an out-of-band delivery path **256**. The out-of-band data is transmitted via the out-of-band downstream path **258** of transmission medium **154** by means such as, but not limited to, a Quadrature Phase-Shift Keying (QPSK) modem array **260**, or an array of data-over-cable service interface specification (DOCSIS) modems, or other means known to those skilled in the art. Two-way communication utilizes the upstream portion **262** of the out-of-band delivery system. DSCTs **110** transmit out-of-band data through the transmission medium **154**, and the out-of-band data is received in headend **102** via out-of-band upstream paths **262**. The out-of-band data is routed through router **264** to an application server or to the VOD pump **226** or to control system **232**. Out-of-band control information includes such information as a pay-per-view purchase instruction and a pause viewing command from the subscriber location **108** (shown in FIG. **1**) to a video-on-demand type application server, and other commands for establishing and controlling sessions, such as a Personal Television session, etc. The QPSK modem array **260** is also coupled to communication link **152** (FIG. **1**) for two-way communication with the DSCTs **110** coupled to nodes **106**.

The router **264** is used for communicating with the hub **104** through transmission medium **150**. Typically, command and control information among other information between the headend **102** and the hub **104** are communicated through transmission medium **150** using a protocol such as but not limited to Internet Protocol. The IP traffic **272** between the headend **102** and hub **104** can include information to and from DSCTs **110**, which are connected to the hub **104**.

In the preferred embodiment, the multi-transport stream receiver-transmitter **228** is adapted to encrypt content prior to modulating and transmitting the content. Typically, the content is encrypted using a cryptographic algorithm such as the Data Encryption Standard (DES) or triple DES (3DES), Digital Video Broadcasting (DVB) Common Scrambling or other cryptographic algorithms or techniques known to those skilled in the art. The multi-transport stream receiver-transmitter **228** receives instructions from the control system **232** regarding the processing of programs included in the input transport streams **240**. Sometimes the input transport streams **240** include programs that are not transmitted downstream, and in that case the control system **232** instructs the multi-transport stream receiver-transmitter **240** to filter out those programs. Based upon the instructions received from the control system **232**, the multi-transport stream receiver-transmitter **228** encrypts some or all of the programs included in the input transport streams **240** and then includes the encrypted programs in the output transport streams **242**. Some of the programs included in input transport stream **240** do not need to be encrypted, and in that case

the control system **232** instructs the multi-transport stream transmitter-receiver **228** to transmit those programs without encryption. The multi-transport streams receiver-transmitter **228** sends the DSCTs **110** the information used to decrypt the encrypted program. It is to be understood that for the purposes of this disclosure a "program" extends beyond a conventional television program and that it includes video, audio, video-audio programming and other forms of services and digitized content. "Entitled" DSCTs **110** are allowed to use the decryption information to decrypt encrypted content, details of which are provided hereinbelow.

The multi-transport stream transmitter/receiver **228** uses the MSK from the control system **232** to encrypt service instances. The multi-transport stream transmitter/receiver **228** includes a counter that produces a numerical value every couple of seconds or so and an encryptor. The encryptor uses the MSK to encrypt the counter value to produce a control word. The control word is used by the encryptor as a key for encrypting a portion of the service instance.

The multi-transport stream transmitter receiver **228** includes the counter value in an entitlement control message (ECM), which is multiplexed into the output transport stream **242**. Typically, ECMs are transmitted without being encrypted so that the DSCTs do not have to spend time to decrypting the content of the ECM before generating the control word. However, the ECMs include an authentication token that is used for authenticating the message content and limiting access thereto, as will be explained in detail hereinbelow. Typically, the authentication token is a hash digest of the message content and a secret that is shared with the DSCTs **110**, such as the MSK. Only DSCTs that have the MSK will be able to encrypt the counter value of the ECM to generate the control word that decrypts the service instance.

In the preferred embodiment, the entitlement generator **236** associates each encrypted service instance, with a unique entitlement specifier, which is included in the ECM. A DSCT **110** uses the entitlement specifier to determine whether the DSCT **110** is entitled to the service instance.

In the preferred embodiment, the hub **104**, which functions as a mini-headend, includes many or all of the same components as the headend **102**. The hub **104** is adapted to receive the transport-streams **242** included in the in-band path **254** and redistribute the content therein throughout its sub-distribution network **160**. The hub **104** includes a QPSK modem array (not shown) that is coupled to communication links **152** and **154** for two-way communication with DSCTs **110** that are coupled to its sub-distribution network **160**. Thus, it is also adapted to communicate with the DSCTs **110** that are coupled to its sub-distribution network **160**, with the headend **102**, and with the content providers **114**.

DSCT **110**

Referring now to FIG. **3**, the DSCT **110** is adapted to receive in-band and out-of-band communication at input-port **302** and output signals via output-port **322** and client-receiver interface **320**. Output-port **322** couples to connector **326**, which provides a communication path between the DSCT **110** and a subscriber device such as, but not limited to, a television, a VCR, a computer, or the like. In the preferred embodiment, client-receiver interface **320** includes a transceiver for a wireless communication link **120** between the DSCT **110** and a client-receiver **122**.

In an alternative embodiment, the client-receiver interface **320** includes a transceiver for a wired communication link between the DSCT **110** and the client-receiver **120**. The wired communication link can be, but is not limited to, twisted wire pair, Ethernet, telephone lines, and electrical wiring. In yet another embodiment, the DSCT **110** includes multiple client-receiver interfaces **320** for communication with more than one client-receiver **122**.

The operation of the DSCT **110** shall first be described with respect to a television coupled to output-port **322** and then, secondly, with respect to a client-receiver **122**, such as a laptop computer or a set top, coupled to the DSCT **110** through the wireless communication link **120**.

The DSCT **110** includes a user-interface **316**, such as an infrared receiver, through which the user enters commands, such as selecting a "user-channel" for viewing a selected service instance. It is important to remember that a "user-channel" is not a conventional television channel. A conventional television channel in a cable television system is a 6 MHz band (which carries one analog program) centered on a particular frequency. However, today a "user-channel" conceptively corresponds to a service instance or a string of service instances in the preferred embodiment of the present invention. Frequently, multiple service instances are multiplexed together in a transport stream, and the transport stream is RF modulated and transmitted in a 6 MHz band. Thus, a single 6 MHz band carries multiple service instances or user-channels. When a user changes programs or service instances by selecting a new user-channel, the new user-channel and the old user-channel might be carried in the same 6 MHz band or in different 6 MHz bands. So it is important to distinguish between a conventional channel and a user-channel. It is to be understood user-channel represents one type of communication channel. Communication channels include, but are not limited to, communication signals that are separated by: frequency, which is generally referred to as frequency-division multiplexing (FDM); time, which is generally referred to as time-division multiplexing (TDM); and code, which is generally referred to as code-division multiplexing (CDM).

In the preferred embodiment, the transceiver **308** receives out-of-band communication **258** from input port **302**. The out-of-band communication data includes among other things system tables and messages including secure messages such as EMMs. EMMs are sent to the secure element **314** for processing and the system tables are stored in memory **310**. In the preferred embodiment, the transceiver **308** is tunable over a range of predetermined frequencies and is controlled by processor **312**. In an alternative embodiment, the DSCT **110** includes a plurality of tunable transceivers that are controlled by the processor **312**. In another preferred embodiment, the processor **312** controls at least one of the transceivers and the client-receiver interface **320** controls at least one of the transceivers.

In the preferred embodiment, the system tables stored in memory **310** are tables of system information such as program number tables and encryption tables, which identify, among other things, whether a program is encrypted or not. System tables are prepared by the control system **232** and transmitted to the DSCT **110** via in-band or out-of-band communication paths.

The processor **312** receives the user input from the user interface **316** and determines the frequency band that contains a selected user-channel. Generally, the multiplexed service instances are in the form of MPEG programs. In that case, the processor **312** consults system information tables, which are stored in memory **310**, to determine the frequency band of the selected user-channel and the MPEG program number for the selected user-channel. The processor **312** instructs the tuner **304** to tune to the desired frequency and to provide it with a program association table (PAT) for that frequency band.

The tuner **304** receives in-band communication from input-port **302**, which is coupled to the transmission medium **154**. In response to instructions from the processor **312**, the tuner **304** tunes to the specified frequency band. Typically, the tuner **304** also includes a demultiplexer for demultiplexing the received transport stream **242**. The tuner **304** extracts a PAT (the packet that has the PID value of 0) from the received transport stream **242** and sends the PAT to the processor **312**. The processor **312** uses the PAT to determine which PMT is associated with the selected service instance, and instructs the tuner **304** to provide it with the appropriate PMT. Using the PMT, the processor **312** determines the elementary streams that make up the selected service instance and then instructs the tuner **304** to extract those elementary streams from the received transport stream **242**.

Frequently, the transport stream **242** includes some service instances that are not encrypted and some that are encrypted. The processor **312** uses the system tables to identify encrypted service instances and unencrypted service instances. If the processor **312** determines the selected service instance is not encrypted, the processor **312** instructs the tuner **304** to send the selected service instance to the output-port **322**. On the other hand, if the selected service instance is encrypted, the processor **312** instructs the tuner **304** to send the selected service instance to the cryptographic device **318**.

Generally, the PMT of a service instance includes the PID value of the ECM for the service instance. In that case, the processor **312** tells the tuner **304** to extract those ECMs and send them to the secure element **314**. The ECMs include information used for decrypting the selected service instance and also include an entitlement specifier.

The secure element **314** is used for, among other things, providing cryptographic device **318** with the control word used for decrypting the selected service instance. It is important to note that in the conditional access system of the DBDS **100** the DSCT **110** might not be able to access a selected service instance even though the DSCT **110** has the necessary keys used for decrypting the selected service instance. In other words, in addition to having all the keys used in accessing the selected service instance, the DSCT **110** must be "entitled" to access the selected service instance. The DSCT **110** receives entitlements for service instances from the Entitlement Generator **236** of the control system **232**.

When the DSCT **110** is entitled to the selected service instance, the secure element **314** provides the cryptographic device **318** with the control word used for decrypting the selected service instance. The cryptographic device **318** decrypts the selected service instance using the control word from the secure element **314** and the decrypted service instance is sent to the output port **322**. The manner in which the secure element **314** determines whether the DSCT **110** is entitled is described in detail hereinbelow.

The DSCT **110** also includes a storage device **324** for storing service instances. The user can use the user interface **316** to instruct the DSCT **110** to store a received service instance in storage device **324**. In another embodiment, the storage device is external to the DSCT **110**, and in that case, the service instance is sent to the external storage device through output-port **322** or through an input/output interface (not shown).

Among other things, the DSCT **110** interfaces with client-receivers **122** via communication link **120**. In the preferred embodiment, the communication link **120** is a wireless communication link, and the client-receiver interface **320** is a card that can be installed in the DSCT **110** by a user or qualified technician. The client-receiver interface **320** includes a transceiver for communicating with the client-receiver **122**. In the preferred embodiment, the bandwidth of the client-receiver interface **320** is such that it can communicate with multiple client-receivers. In one embodiment, the DSCT **110** is adapted to accept multiple client-receiver interfaces **320** for communicating with multiple client-receivers **122**.

In one embodiment, the client-receiver interface **320** also includes logic for implementing the encryption/decryption of information transmitted between the client-receiver and the DSCT **110** and for controlling one of the tuners **304** and one of the transceivers **308**. The logic of the present invention can be implemented in hardware, software, firmware, or a combination thereof. In the preferred embodiment(s), the logic is implemented in hardware, as in an alternative embodiment, the logic can be implemented with any or a combination of the following technologies, which are all well known in the art: a discrete logic circuit(s) having logic gates for implementing logic functions upon data signals, an application specific integrated circuit (ASIC) having appropriate combinational logic gates, a programmable gate array (s) (PGA), a field programmable gate array (FPGA), etc. In an alternative embodiment, the logic is implemented in software or firmware that is stored in a memory and that is executed by a suitable instruction execution system.

In an alternative embodiment, instead of the client-receiver interface **320** being a card that is installable, the client-receiver interface **320** is a fixed part of the DSCT **110**. Whether the client-receiver interface **320** is an installable card or not is a matter of implementation.

The memory **310** also includes tables, which are used for, among other things; identifying a client-receiver **122** and establishing secure communication therewith. In the preferred embodiment, the DSCT **110** manages a local wireless network, and the client-receiver **122** is adapted to discover the wireless network when it is brought into the network. In an alternative embodiment, the DSCT **110** manages a local wired network, and the client-receiver **122** discovers the network and the network discovers the client-receiver **122** when the client-receiver **122** is coupled to the DSCT **110** through the network.

The client-receiver **122** transmits a message to the DSCT **110**, which includes hardware information about the client-receiver **122**. The processor **312** uses the tables of memory **310** to identify the device type of the client-receiver **122**. For example, the received message includes hardware information that the processor **312** uses to determine whether the client-receiver **122** is a computing device such as a laptop or a personal digital assistant, or a set top device, among others. The DSCT **110** and the client-receiver **122** establish communication using protocols known to those skilled in the art, including but not limited to Open Server Gateway interface (OSGi), Jini, Home Audio/Video interoperability (HAVi), and Universal Plug-n-Play (UPnP). In another non-limiting embodiment, the DSCT **110** receives the message from the client-receiver **122** and forwards at least part of the message to the headend **102**. The control system **232** uses the message from the DSCT **110** and the database **240** to identify the client-receiver **122**, and the control system **232** sends a message to the DSCT **110** instructions on how or whether to establish secure communication with the client-receiver **122**.

The memory **310** includes logic for dynamic encryption scheme determination. Generally, the content transmitted from the DSCT **110** to the client-receiver **122** is transmitted so as to protect the privacy of the communication. The

encryption scheme implemented by the DSCT **110** and the client-receiver **122** is determined by considering factors such as the device type of the client-receiver **122** and the communication medium. For example, when the client-receiver **122** is a laptop, the encryption scheme may be different from when the client-receiver **122** is a PDA or set top. Non-limiting examples of dynamic encryption scheme determination logic include, but are not limited to, secure sockets layer (SSL) protocol, Digital Transmission Content Protection (DTCP), Content Protection for Recordable Media (CPRM), and transport layer security (TLS) protocol. These protocols and other dynamic encryption scheme determination logic known to those skilled in the art are intended to be within the scope of the invention.

Referring now to FIG. **4**, the steps **400** are implemented for establishing private communication between the DSCT **110** and the client-receiver **122**. In step **402**, the DSCT **110** receives a client-receiver identification message from the client-receiver. The message is sent to the DSCT **110** when the client-receiver **122** discovers the local network maintained by the DSCT **110**. The message includes device information such as hardware information about the client-receiver **122**.

In step **404**, the processor **312** uses tables stored in memory **310** and the received client-receiver identification message to determine a classification for the client-receiver **122**. The processor **312** in negotiating an encryption scheme with the client-receiver **122** uses the classification of the client-receiver **122**.

In step **406**, the processor **312** implements logic for negotiating an encryption scheme for the client-receiver **122**. In the preferred embodiment, the encryption scheme is determined dynamically, when the client-receiver **122** is coupled to the local area network. In an alternative embodiment, the encryption scheme is determined dynamically responsive to dynamic changes in the local area network, such as the amount of content delivered to the client-receiver **122**, or responsive to user input. For example, the user of the client-receiver **122** might desire a different level of encryption than the one that was negotiated. In that case, user selects the different level, higher or lower, and the client-receiver **122** in the DSCT **110** negotiate a new level of security based upon the input of the user. However, in the preferred embodiment, the DSCT **110** can override the input of the user when negotiating the encryption scheme, so as to maintain at least a predetermined minimum level of security.

In another non-limiting example, the encryption scheme is dynamically determined responsive to the content type being transmitted to the receiver. For example, when the content type is a program or service instance that is transmitted to the headend **102** to the DSCT **110** without encryption, the content is transmitted to the client-receiver with no encryption or a low level of encryption. Whereas, when the content type is an encrypted program or encrypted service instance, then the content type is transmitted to the client-receiver with a high level of encryption. Thus, when the user of the client-receiver **122** changes from one user-channel to another or requests a different type of content, the encryption scheme is dynamically determined.

Referring to FIG. **5**, steps **500** are implemented by processor **312** and the secure element **314**. In step **502**, the DSCT **110** receives a request from the client-receiver **122** for a service instance. The service instance is generally a user selected service instance such as a program selected by the user of the client-receiver **122**. In another embodiment, the service instance is a service such as an Internet connection.

In step **504**, the secure element **312**, which maintains a map of entitlements granted to the client-receiver, determines whether or not the client-receiver **122** is entitled to the requested service instance. The entitlement map associates services with entitlements. If the client-receiver **122** is entitled to the service instance, the processor **312** proceeds to step **506** and determines whether the service instance is accessible at the DSCT **110**. Some service instances are accessible to the DSCT **110** in response to requests of the user. For example, the DBDS **100** might include personal television, whereby the transmission of the service instance is controlled by the user, which means the transmission can be paused, rewound, etc., just like a VCR. Another non-limiting example of a requested service instance includes pay-per-view programming.

If the selected service instance is not accessible at the DSCT **110**, in step **508**, the DSCT **110** sends a request for the service instance to the headend **102**. In the preferred embodiment, the secure element **314** generates a secure message for the request of the user and sends it to the transceiver **308** for transmission to the headend **102**. In an alternative embodiment, the processor **312** forwards the service request from the client-receiver **122** to the headend **102**. In yet another embodiment, the processor **312** generates the service request for client-receiver **122**. In response to the request for the service, the headend **102** provides the service to the DSCT **110**. Generally, the service is included in transport stream **242**.

In step **510**, the client-receiver **122** is provided with the entitlement for the selected service instance. In the preferred embodiment, the secure element **314** generates the entitlement for the selected service instance and provides the entitlement to the client-receiver **122**. Typically, the secure element **314** generates an EMM, which includes the entitlement, and sends the entitlement to the client-receiver **122** via the communication link **120**. In this embodiment, the DSCT **110** acts as an entitlement granting authority for the client-receiver **122**. The DSCT **110** has the authority and capacity to grant and delete entitlements to the client-receiver **122** for the service instance.

The secure element **314** also updates the entitlement map so that the state of the entitlement associated with the service corresponds to the newly granted entitlement. Thus, the secure element **314** can readily determine whether the client-receiver **122** is entitled to (or is not entitled to), i.e., it is permitted to (or is not permitted to), receive a service instance merely by checking the entitlement map. In addition, the secure element **314** sends a message to the system controller **232** that indicates that the client-receiver **122** has been granted an entitlement, which the system controller **232** can use for billing purposes.

In one preferred embodiment, the secure element **314** generates a secure message requesting entitlement for the selected service instance for the client-receiver **122** and sends the secure message to the entitlement generator **236**. Generally, the secure message includes message content that is encrypted by the public key of the entitlement generator and an authentication token, which is a hash digest of the message content signed by the private key of the DSCT **110**.

The entitlement generator **236** receives the secure message from the DSCT **110** and provides the entitlement for the selected service instance to the DSCT **110** in an EMM. The secure element **314** of the DSCT **110** then processes the EMM and provides the entitlement to the client-receiver **122**. In step **512**, the selected service instance is provided to the client-receiver **122**. It should be noted that steps **500** are merely exemplary, and in alternative embodiments, more or

less, steps are implemented. For example, in another non-limiting example, the processor **312** determines whether or not the client-receiver **122** should be entitled to the selected service instance. In that embodiment, the DSCT **110** can be used to regulate the service instances provided to the client-receiver **122**.

In one preferred embodiment, the DSCT **110** receives the service request from the client-receiver **122** and forwards it to the headend **102** without any processing. In that case, headend **102** decides on the encryption scheme used for transmitting the service instance to the client-receiver **122** and the DSCT **110** acts as a gateway for the client-receiver **122**. The headend **102** can use information related to the billing status of the subscriber and/or knowledge of the hardware type for the client-receiver **122**.

In one preferred embodiment, the DSCT **110** receives service requests from the client-receiver **122** and processes them. The secure element **314** generates a secure message for the service request, and the headend **102** determines whether to entitle or not entitle the client-receiver **122** for the selected services. In addition, when the headend **102** decides to entitle the client-receiver **122** for the requested service, the headend **102** can also determine the encryption scheme for the selected service. In this case, the DSCT **110** acts as a proxy for the client-receiver **122** by forwarding service requests and having the headend **102** make the determinations.

In one preferred embodiment, when the DSCT **110** or the headend **102** determines that the client-receiver **122** is not entitled to a requested service instance, the DSCT **110** sends a service denied message to the client-receiver **122**. Upon receipt of the service denied message, the client receiver **122** informs the subscriber using the client-receiver **122** that the service was denied.

In one preferred embodiment, when the DSCT **110** receives a service request from the client-receiver **122**, the DSCT **110** determines whether to provide the requested service to the client-receiver based upon local availability of the requested service. When the requested service is currently being used by the DSCT **110** or a different client-receiver, the DSCT **110** can decide not to provide the client-receiver **122** with the requested service.

Refer now to FIG. **6**, in the preferred embodiment, the logic implemented in steps **600** resides in the secure element **314**, processor **312**, and the cryptographic device **318**. In step **602**, the selected service instance is received by the tuner **304**, which is controlled by processor **312**. In an alternative embodiment, the selected service instance is stored on storage device **324** and is retrieved therefrom.

In step **604**, the processor **312** uses system tables to determine whether or not the service instance is encrypted. If the selected service instance was encrypted at the headend, the processor **312** determines in step **606** whether the service instance should be decrypted. The processor **312** uses system information tables stored in memory **310** for that determination. If the content of the service instance is not to be decrypted, the processor **312** instructs the tuner **304** to send the service instance to the client-receiver interface **320**, which in step **614** transmits the service instance.

On the other hand, when the processor **312** determines to decrypt the service instance, the processor **312** instructs the tuner to send the service instance to the cryptographic device **318**. In step **608**, the cryptographic device **318** decrypts to the service instance using the control word(s) provided by the secure element **314**.

In step **610**, the processor **312** determines an encryption scheme for the selected service instance. The encryption scheme can be either to encrypt or not encrypt the selected service instance. This determination is made for the decrypted service instance and for received unencrypted service instances. The processor **312** uses system tables stored in memory **310** for that determination. In one embodiment, the determination includes factors such as the content being sent to the client-receiver **122**. For example, when the content is Internet information, the content might be encrypted to protect the privacy of the user, even though the information may not have been transmitted from the headend **102** with encryption.

When the processor **312** determines to encrypt the service instance, then in step **612**, the service instance is provided to the cryptographic device **318**. The cryptographic device **318** encrypts the service instance using an encryption scheme that was dynamically negotiated by the DSCT **110** and the client-receiver **122**. Typically, the secure element **314** provides the cryptographic device **318** with the encryption keys used by the cryptographic device **318** to encrypt the service instance.

On the other hand, when the processor **312** determines not to encrypt the selected service instance, the selected service instance is provided to the client-receiver interface **320**. In step **614**, the client-receiver interface **320** transmits the service instance to the client-receiver **122**.

Referring to FIG. **7**, the secure element **314** includes a processor **702** and a memory **704**. The memory **704** is accessible only to the processor **702** and it includes entitlements **706**, secrets **708**, and keys **710**. In the preferred embodiment, the processor **702** and memory **704** are packaged in tamper resistant packaging such that no other device other than processor **702** can access the memory **704**. This protects the contents of memory **704** and helps insure that private information remains private and confidential.

The keys **710** include a public key-private key pair for the DSCT **110**, which were given to the secure element **314** during the manufacture thereof, and public keys for client-receivers **122** that are in the local network managed by the DSCT **110**. The private key of the DSCT **110** is stored in the memory **704** and is not given to any processor other than processor **702**. However, the public key of the DSCT **110** is provided to other devices of the DBDS **100**, such as the CAA **234** and Entitlement Generator **236** of the control system **232** and to the client-receiver **122**. The holders of the DSCT's public key can use the public key for authenticating messages signed by the private key of the DSCT **110** and also for encrypting messages sent to the DSCT **110**.

The secrets **708** are secrets that are shared between the DSCT **110** and the client-receiver **122**. In the preferred embodiment, the secrets **708** are used for, among other things, encrypting service instances provided to the client-receiver **122**, generating authentication tokens for messages transmitted to the client-receiver **122** and authenticating messages from the client-receiver **122**.

The entitlements **706** include an entitlement map for entitlements that have been given to the client-receiver **122**. The entitlement map associates an entitlement identifier (ID), which is associated with a service instance, with the client-receiver's entitlement for that service instance. For example, in the exemplary entitlement map **706** the client-receiver **122** is entitled to access a service instance having an entitlement ID of 10 but not entitled to access a service instance having an entitlement ID of 9. Among other things, the entitlement map **706** is used for billing purposes, keeping track of the entitlements granted to the client-receiver **122** so that the subscriber can be properly billed, and for determining which services the client-receiver **122** is entitled to receive.

The memory **704** also includes allocated memory **712**, which has been allocated to the Entitlement Generator **236**. The allocated memory **712** includes the entitlements **714** that the Entitlement Generator **236** has given the DSCT **110** to access service instances, secrets **716** used for creating control words to decrypt service instances, and keys **718** from the CAA **234** and the Entitlement Generator **236**. The keys **718** include the public key for the Entitlement Generator **236**, which the CAA **234** sent to the DSCT **110** in an EMM.

The processor **702** includes an authorization/entitlement management module (AEMM) **720**. The AEMM **720** provides entitlements to the client-receiver **122** for service instances. The AEMM **720** also authenticates messages from the client-receiver **122**, and generates secure messages for the client-receiver **122**. In the preferred embodiment, the AEMM **720** receives EMMs for the DSCT **110** from the headend **102** and EMMs from the client-receiver **122**, and the AEMM **720** authenticates them. If the EMMs are for the DSCT **110** and are authenticated by the AEMM **720**, the AEMM **720** responds to the EMMs and implements them.

Referring now to FIG. **8**A, an entitlement management message **800** includes an address field **802**, message content **804** and an authentication token **806**. EMM **800** is a typical EMM used for securely transmitting information between the headend **102** and the DSCT **110**, between the headend **102** and the client-receiver **122**, and the between the DSCT **110** and the client-receiver **122**. The EMM **800** is an exemplary secure message.

The address field **802** includes the address of the recipient. For example, the address field **802** of an EMM from the headend **102** to the DSCT **110** includes the IP address or serial number of the DSCT **110**. Whereas, in an EMM **800** sent from the DSCT **110** to the client-receiver **122**, the address field **802** includes the address of the client-receiver **122** in the local area network maintained by the DSCT **110**. In alternative embodiments, the address field **802** is the IP address of the client-receiver or a unique identifier, which is unique to the client-receiver **122** in the DBDS **100**. Typically, the address is provided to the secure element **314** by the processor **312** using the tables and memory **310**. The message content **804** is the substance of the message. It includes the information that the sender intended the recipient to receive. Depending upon the information included therein, the message content **804** can be encrypted or not. The AEMM **820** determines whether or not the message content is encrypted.

A data field **808** includes data for processing the EMM **800**. The data field **808** includes key identifiers that are used for identifying the keys used in encrypting and signing portions of the EMM **800**. For example, when the content **804** is encrypted by the public key of the recipient, the data field **808** indicates that the content **804** is encrypted and which public key was used for the encryption.

Whether the message content **804** is encrypted depends upon whether or not privacy is desired. For example, if the message content **804** is a public key, which are distributed to multiple elements of the DBDS **100**, then the message content **804** might not be encrypted. Whereas, when the message content **804** is related to entitlements, or encryption, or decryption, then the message content **804** will probably be encrypted. Whether the message content **804** is encrypted is a matter of implementation and depends upon the sought after level of security in the DBDS **100** and between the DSCT **110** and the client-receiver **122**.

The authentication token **806** is used for authenticating the purported sender of the EMM **800** and for validating the message content **804**, i.e., checking that the received message content is the same as what was sent. In other words, among other things, the recipient of the EMM **800** uses the authentication token **806** to make certain that the message content **804** was not tampered with nor garbled during transmission. Typically, as described below, the private key of the sender signs the authentication token **806**.

FIG. **8**B illustrates the exemplary creation of the authentication token **806**, where circles denote processes or functions and rectangles denote objects or output. A secure one-way hash function **812**, such as MD **5**, receives input **810** and produces the hash digest **814**. The input **810** includes the unencrypted message content **804** or at least a portion thereof. In an alternative embodiment, the input **810** also includes a secret, which is shared with the recipient of the EMM **800**. Typically, the recipient receives the secret in a separate EMM and stores the secret, so that the secret can be used to authenticate subsequent EMMs. For example, secrets **716** are secrets that the Entitlement Generator **236** has given to the DSCT **110**, and secrets **708** are secrets the DSCT **110** has given to the client-receiver **122**.

The hash digest **814** is a value that is dependent upon the input **810**. If the input **810** is changed, the value of the hash digest also changes.

The hash digest **814** is digitally signed by the digital signature function **816** using a cryptographic technique such as RSA, to produce the signed hash digest **818**. Digitally signing the hash digest **814** converts the value of the hash digest **814** to a different value. The value of the signed hash digest **818** is changed back to the original value of the hash digest **814** by applying the correct key with the correct digital signature function **816** to the signed hash digest **818**. In the preferred embodiment, the digital signature function applies a private key to the hash digest **814** to generate the signed hash digest **818**, and the corresponding public key is used on the authentication token **818** to regenerate the hash digest **814**. In the preferred embodiment, the CAA **234** and the Entitlement Generator **236** of the control system **232**, the DSCT **110** and the client-receiver **122** include the logic for making signed hash digests **818**, which are then used as authentication tokens **806**. Referring again to FIG. **7**, the AEMM **720** includes the logic for authenticating and decrypting a received EMM **800**. If the EMM is encrypted, the AEMM **720** uses the private key of the DSCT **110** to decrypt the message content, thereby converting the ciphertext content **804** to clear text content. The AEMM **720** uses the cleartext content and the authentication token **806** to authenticate the EMM.

Generally, the AEMM **720** determines whether a shared secret is part of the hash digest using information included in the data field **808**, and if it is, then the shared secret is retrieved from memory **704**. If there was no shared secret, the AEMM **720** generates a bash digest of the clear text content. However, if there was a shared secret, the AEMM **720** generates a hash digest of the clear text content and the shared secret. Then, AEMM **720** uses the data field **808** of the EMM **800** to determine the purported sender of the EMM **800**, and uses the public key of the purported sender to convert the value of the authentication token **806** to the value of the original hash digest **814**. Finally, if the original hash digest **814** and the hash digest generated by the recipient have the same value, then the AEMM **720** determines that the EMM **800** is authentic and valid. In other words, the AEMM **720** determines that the EMM **800** did in fact come from its purported sender and the message content **804** has not been corrupted or tampered with.

The AEMM **720** also includes logic for implementing the instructions included in the message content **804**. For

example, the CAA **234** sends an EMM **500** to the DSCT **110** to establish the Entitlement Generator **236** with the DSCT **110**. The AEMM **720** authenticates the EMM **800** as having come from the CAA **234** of the control system **232** and partitions the memory **704** to create allocated memory **712**. For details of allocated memory see Pinder, U.S. Pat. No. 5,742,677, which is hereby incorporated by reference in its entirety. The AEMM **720** then stores the public key of the Entitlement Generator **236** in keys **718**. The public key is provided to the DSCT **110** in an EMM from the CAA **234**.

The Entitlement Generator **236** can use the allocated memory **712** to provide entitlements for the service instances that are provided to the DBDS **100**. The Entitlement Generator **236** sends the DSCT **110** EMMs that are signed by the private key of the Entitlement Generator **236**. AEMM **720** uses the public key of the Entitlement Generator **236**, which is stored in allocated memory **712**, to authenticate the EMMs. When the EMMs **800** are valid, the AEMM **720** acts upon those EMMs. For example, the message content **804** of the EMM **800** can instruct the AEMM **720** to change the entitlements **714**. In the preferred embodiment, entitlements for service instances from the entitlement generator **236** are stored in entitlements **714** as an array. Each encrypted service instant is associated with an element in the entitlement array. The entitlement specifier, which is included in the ECM for a given service instance, is used for determining an array element that has the entitlement of the DSCT **110** for the given service instance. In a non-limiting example, the entitlement specifier for "The Dirty Dozen" is 25 and the 25th array element of the entitlements **714** is the entitlement of the DSCT **110** for "The Dirty Dozen." Generally, the entitlement is binary, YES or NO, 1 or 0. Thus, the DSCT is either entitled or not entitled to the service instance. It should be noted that the DSCT **110** can have all of the keys for accessing a service instance but still not be entitled to the service instance, and if it is not entitled, the DSCT **110** does not decrypt the selected service instance.

When a user selects a service instance, the secure element **314** determines whether the DSCT **110** is entitled to the service instance. The AEMM **720** receives the ECM that is associated with the selected service instance, and authenticates the ECM. The ECM includes the entitlement specifier, a control word indicator (the counter value) and an authentication token, which is a hash digest of the control word indicator and a shared secret.

Generally, the shared secret is the MSK, which the entitlement generator **236** sent to the DSCT **110** in a prior EMM and which is currently stored in secrets **716**. The AEMM **720** generates a hash digest of the control word indicator and the shared secret and compares the generated hash digest with the authentication token. If they are not the same, the ECM was either garbled in transmission or tampered with. In either case, the ECM is ignored.

ECMs are received every couple of seconds, so if one was garbled another one is received shortly thereafter, which is then authenticated. If the ECM is successfully authenticated, i.e., it has not been tampered with or garbled, then the AEMM **720** checks the entitlement of the DSCT **110** for the selected service instance. The AEMM **720** uses the entitlement specifier of the ECM and the entitlements **714** to determine the DSCT's entitlement. Only if the DSCT **110** is entitled, does the secure element **314** to provide the cryptographic device **318** with the control word for decrypting the service instance. In the preferred embodiment, encrypting the control word indicator using the MSK as the encryption key generates the control word.

In the preferred embodiment, the AEMM **720** includes logic for granting entitlements to the client-receiver **122** for service instances. When the AEMM **720** receives a request from the client-receiver **122** for a service instance, the AEMM **720** determines whether the client-receiver **122** is currently entitled to the service instance by checking the entitlements **706**. If the client-receiver **122** is not entitled, the AEMM **720** determines whether to entitle the client-receiver **122**. If the AEMM **720** determines to grant the entitlement to the client-receiver **122**, the AEMM **720** provides the client-receiver **122** with the entitlement via an EMM, and the AEMM **720** changes the entitlements **706** to reflect the newly granted entitlement. In other words, the array element of elements **706** associated with the service instance would be changed from NO to YES or from 0 to 1. The AEMM **720** can also delete an entitlement for the client-receiver **122** to a service instance by changing the array element that is associated with the service instance. In the preferred embodiment, the client-receiver **122** includes an entitlement map that it uses for accessing received service instances. The AEMM **720** can up date the client-receiver's entitlement map by sending the client-receiver **122** an EMM with new entitlements for the client-receiver **122**. The client-receiver **122** receives the EMM and processes it, thereby updating its entitlements.

In an alternative embodiment, the memory **704** includes an authorization map (not shown), which maps authorizations granted to the client-receiver by an entitlement agent to service instances. Before the AEMM **720** checks the entitlements **706** of the client-receiver **122** for a service instance it checks the authorization map to determine whether the client-receiver is authorized to receive that service. The AEMM **720** will not grant entitlement for a service instance unless the entitlement map indicates that the client-receiver **122** is authorized to receive that service. The AEMM **720** only changes or updates the authorization map in response to EMMs from the system controller **232**.

In the preferred embodiment, the client-receiver **122** request services or service instances using secure messages. The processor **702** uses entitlement **706** to determine whether the client-receiver **122** is currently entitled to the requested service instance. If it is not entitled, the processor **702** sends processor **312** a message indicating that the client-receiver **122** has requested a specific service or service instance, and the processor **312** uses tables memory **310** to determine whether the specific service or service instance is blocked. In this embodiment, users can use the user interface **316** to input information, which is stored in tables of memory **310**, to block services or service instances provided to the client receiver **122**. Thus, the DSCT **110** can act as a filter to prevent certain content such as sexually oriented content from being provided to the client-receiver **122**. The system controller **232** can also block services or service instances. In that case, the system controller **232** sends messages and/or tables to the DSCT **110** that instruct the DSCT **110** which types of client-receiver devices can receive which type of service or service instance. For example, the system controller **232** can instruct the DSCT **110** to block services or service instances from a client-receiver **122** when the client-receiver **122** is PC and the services or service instances are in a digital format such as MPEG. If the requested service instance is not blocked, the processor **702** grants entitlement for the selected service instance and updates entitlement **706**. The entitlement for the service instance is transmitted to the client receiver **122** in an EMM **800**.

In the preferred embodiment, the system controller **232** can send an EMM **800** to the AEMM **720** that suspends the

entitlements of the client-receiver **122** to service instances. The system controller **232** can send an entitlement suspension EMM that suspends the entitlement of a specific client-receiver **122** coupled to the DSCT **110** or all client-receivers coupled to the DSCT **110**. The system controller **232** may send an entitlement suspension EMM based upon the hardware type of the client-receiver **122**. For example, if the operator of the DBDS **100** learns that the security of a particular type of hardware such as a computer having a given operating system has been compromised, the operator can then have the system controller **232** suspend entitlements for all client-receivers **122** coupled to the DBDS **100** until a fix for the security breach has been established. When the DSCT **110** receives an entitlement suspension EMM, the DSCT **110** suspends transmitting service instances to the client-receiver **122**.

The system controller **232** can also send an EMM to the DSCT **110** instructing the processor **312** to no longer determine the encryption scheme for the client-receiver **122**. In that case, the headend **102** determines the encryption scheme used to communicate information between the DSCT **110** and the client-receiver **122**. The headend uses information related to the hardware and software of the client-receiver **122** and the type of communication link **120** between the DSCT **110** and the client-receiver **122**.

Client-Receiver

Referring to FIG. **9**, the client-receiver **122** is in two-way communication with the DSCT **110** via communication link **120**. The client-receiver **122** is shown as another set-top terminal, though it could also take the form of, among other things, a computer, a smart appliance, personal digital assistants (PDAs), or video cassette recorders (VCRs) and televisions that can receive service instances and other information from the DSCT **110**. The client-receiver **122** includes a transceiver **902**, a processor **904**, a memory **906**, a secure element **908**, a user interface **910**, a cryptographic device **912** and an output port/interface **916**. The transceiver **902** receives information such as data, entitlements, authorizations, commands and service instances from the DSCT **110** via communication link **120**. The transceiver **902** is adapted to transmit information to the DSCT **110** via communication link **120**.

In the preferred embodiment, the client-receiver **122** is adapted to be self-aware and recognize the local network managed by the DSCT **110** when the client-receiver **122** is brought into the local network. The processor **904** and memory **906** include the logic for self-awareness. Non-limiting examples of logic for self-awareness include OSGi, UPnP, HAVi, and JINI, all of which are intended to be in the scope of the invention. The memory **906** includes, among other things, system tables, hardware information, and self-awareness logic. When the client-receiver **122** is introduced into the local network of the DSCT **110**, the processor **904** generates a message using the hardware information and self-awareness logic of memory **906**. The message is provided to the transceiver **902**, where it is sent to the DSCT **110** via communication link **120**. The hardware information identifies the type of hardware included in the client-receiver **122** and is used by the DSCT **110** for determining the type of device the DSCT **110** is communicating with. Alternate embodiments include a user interface on the DSCT **110** and the user interface on the client-receiver **122** being used to register the client-receiver **122** and on the client-receiver **122** requesting entitlement information as soon as it is attached to the local network.

The user interface **910** is an infrared detector that receives signals from a remote control device (not shown). In other embodiments, the user interface **910** is a keyboard or keypad or other interface known to those skilled in the art by which the user can provide commands to the client-receiver **122**.

The user interface **910** receives commands from the user and provides them to the processor **904** for processing. Using the user interface **910** the user can request services, change user-channels, etc.

When the user requests a service, the processor **904** sends a message to the DSCT via transceiver **902**. The message can be addressed to the DSCT **110** or to elements of the headend **102**, such as, for example, the entitlement generator **236**. Generally, the message is a secure message, which includes an authentication token. In that case, the secure element **908** generates the secure message and provides the secure message to the transceiver **902** for transmission.

In the preferred embodiment, the secure element **908** includes a processor (not shown) and a memory (not shown) that are included in tamper resistant packaging. Among other things, the secure element **908** generates secure messages; processes received EMMs, and generates control words for the cryptographic device **912**. The secure element **908** includes entitlements granted to the client-receiver **122**, secrets for authenticating messages and generating control words, and keys such as a private key-public key pair of the client receiver **122** and other public keys. The other public keys include trusted public keys, the public key of the conditional access authority **234** and the public key of the DSCT **110**.

In the preferred embodiment, when the secure element **908** is produced, the manufacturer assigns it a serial number and its public key-private key pair. The manufacturer provides the serial number and the public key of the secure element **908** to the operator of the DBDS **100**, which then includes them in its database **240**. When the client-receiver **122** is first brought into the local network of the DSCT **110**, it negotiates a communication protocol with the DSCT **110** and sends the DSCT **110** its public key. The DSCT **110** sends a secure message to the CAA **234** informing the CAA **234** that the client-receiver **122** is attempting to register. The CAA **234** determines whether or not the client-receiver **122** is included in its database **240**, and if it is, the CAA **234** initiates registration, which can include exchanging one of the trusted public keys of the client-receiver **122** with the public key of the CAA **234**. The CAA **234** sends the client-receiver **122** via, the DSCT, an EMM that includes the public key of the DSCT **110**, which is then stored in the secure element **908**. The client-receiver **122** accepts the public key of the DSCT **110** as a trusted key.

In one embodiment, the secure element **908** is a smart card such as a PC memory card that is user installable into appropriately configured computers. In another embodiment, the secure element is not user installable such as when the client-receiver **122** is a set top terminal.

The processor **904** negotiates an encryption scheme with the DSCT **110** for received service instances. In some situations, the negotiated scheme is no encryption. In that case, the transceiver **902** sends the service instance to the output port **916**. In other situations, the service instance is encrypted by the DSCT **110** or at the headend **102**, and in that case, the transceiver **902** sends the service instance to the cryptographic device **912** for decryption. The cryptographic device **912** decrypts the service instance using control words provided by the secure element **908** and sends the decrypted service instance to the output port **916**. Typically, a user device (not shown) such as a video display or a speaker is coupled to output port **916** for providing the service instance to the user.

Those skilled in the art will recognize that the client-receiver **122** can include more or fewer modules than described hereinabove. For example, in a non-limiting alternative embodiment, the client-receiver **122** does not include a secure element **908**. The processor **904** provides the cryptographic device **912** with the control words for decrypting received service instances.

Although exemplary preferred embodiments of the present invention have been shown and described, it will be apparent to those of ordinary skill in the art that a number of changes, modifications, or alterations to the invention as described may be made, none of which depart from the spirit of the present invention. Changes, modifications, and alterations should therefore be seen as within the scope of the present invention. It should also be emphasized that the above-described embodiments of the present invention, particularly, any "preferred embodiments" are merely possible non-limiting examples of implementations, merely setting forth a clear understanding of the principles of the inventions.

What is claimed is:

1. A master-receiver in a subscriber network that receives a service instance from a headend and re-transmits the service instance to a client-receiver, the master-receiver comprising:

a transceiver adapted to transmit messages and the service instance to the client-receiver and receive a plurality of messages and information therefrom; and

a processor in communication with the transceiver, adapted to process messages from the client-receiver and dynamically determine an encryption scheme for the service instance transmitted to the client-receiver, wherein the processor is adapted to use at least one message of the plurality of received client-receiver messages to determine the encryption scheme for the service instance,

wherein the at lest one message includes hardware information of the client-receiver that the processor is adapted to use for dynamically determining the encryption scheme of the transmitted service instance.

2. The master-receiver of claim **1**, further including:

a memory having a client-receiver type table included therein, wherein the processor is adapted to use the client-receiver type table to identify a classification for the client-receiver and is adapted to use the classification in determining the encryption scheme for the service instance.

3. The master-receiver of claim **1**, wherein the processor is adapted to use a protocol for secure Internet communication to determine the encryption scheme.

4. The master-receiver of claim **1**, further including:

a cryptographic device adapted to encrypt the service instance.

5. The master-receiver of claim **1**, further including:

a secure element adapted to entitle and disentitle the client-receiver to access service instances.

6. The master-receiver of claim **1**, further including:

a secure element having an entitlement map that associates service instances to entitlements granted to the client-receiver, wherein the master-receiver is adapted to use the entitlement map to determine whether the client-receiver is authorized to receive a service instance.

7. The master-receiver of claim **6**, wherein the secure element further includes a second processor and a memory having the private key of private key-public key pair for the receiver, wherein the memory is accessible only to the second processor.

8. The master-receiver of claim **7**, wherein the entitlement map is accessible only to the second processor.

9. The master-receiver of claim **1**, further including:

an entitlement manager module adapted to entitle the client-receiver to access the service instance.

10. The master-receiver of claim **9**, wherein the entitlement manager module is further adapted to disentitle the client-receiver, wherein prior to disentitlement the client-receiver was entitled to access the service instance and after disentitlement the client-receiver can no longer access the service instance.

11. The master-receiver of claim **9**, wherein the entitlement manager module is further adapted to generate a secure message for the client-receiver, and wherein the secure message includes an authentication token that authenticates that the secure message was generated by the master-receiver.

12. The master-receiver of claim **11**, wherein the secure message includes content of which at least a portion of the content is used as an input for a hash function to produce a digest, which is signed by a private key of a public key-private key pair of the master-receiver, and the signed digest is the authentication token included in the at least one secure message.

13. The master-receiver of claim **11**, further including:

a port coupled to a communication link coupling the master-receiver to the headend and adapted to receive a secure message addressed to the client-receiver having content included therein, wherein the entitlement manager module authenticates the received secure message and includes the content in the generated secure message.

14. The master-receiver of claim **13**, wherein at least a portion of the content of the received secure message includes encrypted content and the entitlement manager module decrypts the encrypted content using the private key of a public key-private key pair of the master-receiver.

15. The master-receiver of claim **1**, further including:

a second transceiver in communication with the headend adapted to transmit messages to the headend and receive messages therefrom; and

wherein the service instance transmitted to the client-receiver is received in the master-receiver responsive to the master-receiver transmitting a service request message through the second transceiver.

16. The master-receiver of claim **15**, wherein the service request message includes a receiver identifier, and the receiver identifier is associated with the master-receiver.

17. The master-receiver of claim **15**, wherein the service request message includes a receiver identifier and the receiver identifier is associated with the client-receiver.

18. A method of providing a service instance to a client-receiver in two-way communication with a master-receiver, which is in communication with a headend of a subscriber network system, the method implemented in the master-receiver and comprising the steps of:

receiving a message from the client-receiver, the message having client-receiver type information included therein;

dynamically determining an encryption scheme, wherein determining the encryption scheme includes the act of using the client-receiver type information to determine the encryption scheme; and

determining whether to encrypt the service instance according to the dynamically determined encryption scheme.

19. The method of 18, wherein the step of determining whether to encrypt the service instance includes the steps of:

determining whether the service instance is encrypted;

responsive to determining the service instance is encrypted:

decrypting the service instance, wherein decrypting the service instance includes the act of converting the service instance to an unencrypted service instance; and

encrypting the unencrypted service instance using the dynamically determined encryption scheme, wherein the step of encrypting the unencrypted service instance includes the act of converting the unencrypted service instance to an encrypted service instance;

responsive to determining the service instance is not encrypted:

encrypting the service instance using the dynamically determined encryption scheme, wherein the step of encrypting the service instance includes the act of converting the service instance to an encrypted service instance;

and further including the step of:

transmitting the encrypted service instance to the client-receiver.

20. The method of claim 18, further including the steps of:

generating a secure message for the client-receiver for the service instance; and

transmitting the secure message to the client-receiver, thereby entitling the client-receiver to access the service instance.

21. The method of claim 18, further including the steps of:

generating a secure message for the client-receiver for the service instance; and

transmitting the secure message to the client-receiver, thereby disentitling the client-receiver to access the service instance.

22. The method of claim 18, further including the steps of:

receiving a message from the client-receiver; and

responsive to receiving the message, transmitting a service request message to the headend for the service instance, whereby the service instance is received at the master-receiver in response to the transmitted service request message.

23. The method of claim 18, further including the step of:

checking an entitlement map for the client-receiver to determine whether the client-receiver is entitled to receive the service instance, wherein the entitlement map includes multiple entitlements, each entitlement is either a permission or lack of permission for the client-receiver to receive a particular service instance, and wherein the service instance is only encrypted according to the dynamically determined encryption scheme when the entitlement associated with the service instance is a permission for the client-receiver to receive the service instance.

24. The method of claim 23, further including the steps of:

receiving an entitlement message from the headend having at least one entitlement for the client-receiver included therein; and

updating the entitlement map to include the at least one entitlement.

25. The method of claim 23, further including the steps of:

prior to the step of checking, receiving a message from the client-receiver for the service instance; and

responsive to determining that the client-receiver is not entitled to receive the service instance, updating the entitlement map to change the state of the entitlement associated with the service instance, whereby after the update, the client-receiver is entitled to receive the service instance.

26. A master-receiver in a subscriber network that receives a service instance from a headend and re-transmits the service instance to a client-receiver, the master-receiver comprising:

a port adapted to receive the service instance;

a transceiver adapted to transmit messages and the service instance to the client-receiver and receive a plurality of messages and information therefrom;

a cryptographic device in communication with the port and the transceiver adapted to encrypt the service instance; and

a processor in communication with the transceiver and the cryptographic device adapted to process the messages from the client-receiver and adapted to dynamically determine an encryption scheme for the service instance transmitted to the client-receiver, wherein the processor is adapted to use at least one message of the plurality of received client-receiver messages to determine the encryption scheme for the service instance,

wherein the at least one message includes hardware information of the client-receiver that the processor is adapted to use for dynamically determining the encryption scheme of the transmitted service instance.

27. The master-receiver of claim 26, further including:

a memory having a client-receiver type table included therein, wherein the processor is adapted to use the client-receiver type table to identify a classification for the client-receiver and is adapted to use the classification in determining the encryption scheme for the service instance.

28. The master-receiver of claim 26, wherein the processor is adapted to use a protocol for secure Internet communication to determine the encryption scheme.

29. The master-receiver of claim 28, wherein the protocol is the Secure Sockets Layer (SSL) protocol.

30. The master-receiver of claim 28, wherein the protocol is the DTCP protocol.

31. The master-receiver of claim 28, wherein the protocol is the Content Protection for Recordable Media (CPRM) protocol.

32. The master-receiver of claim 28, wherein the protocol is the Transport Layer Security (TLS) protocol.

33. The master-receiver of claim 26, wherein the received client-receiver messages include at least one message conforming to the Universal Plug and Play (UPnP) standard.

34. The master-receiver of claim 26, wherein the received client-receiver messages include at least one message conforming to the Jini standard.

35. The master-receiver of claim 26, wherein the received client-receiver messages include at least one message conforming to the Open Service Gateway Initiative standard.

36. The master-receiver of claim 26, further including:

a secure element having an entitlement manager module adapted to entitle the client-receiver to access the service instance.

37. The master-receiver of claim 36, the entitlement manager module is further adapted to disentitle the client-receiver, wherein prior to disentitlement the client-receiver was entitled to access the service instance and after disentitlement the client-receiver can no longer access the service instance.

38. The master-receiver of claim **36**, wherein the entitlement manager module is further adapted to generate a secure message for the client-receiver, and wherein the secure message includes an authentication token that authenticates that the secure message was generated by the master-receiver.

39. The master-receiver of claim **38**, wherein the secure message includes content of which at least a portion of the content is used as an input for a hash function to produce a digest that is signed by a private key of a public key-private key pair of the master-receiver, and the signed digest is the authentication token included in the secure message.

40. The master-receiver of claim **38**, wherein the port receives a secure message addressed to the client-receiver having content included therein, the entitlement manager module authenticates the received secure message and includes the content in the generated secure message.

41. The master-receiver of claim **40**, wherein at least a portion of the content of the received secure message includes encrypted content and the entitlement manager module decrypts the encrypted content using the private key of a public key-private key pair of the master-receiver.

42. The master-receiver of claim **26**, further including:

a second transceiver in communication with the port adapted to transmit messages to the headend and receive messages therefrom; and

wherein the service instance transmitted to the client-receiver is received in the master-receiver responsive to the master-receiver transmitting a service request message through the second transceiver.

43. The master-receiver of claim **42**, wherein the service request message includes a receiver identifier, and the receiver identifier is associated with the master-receiver.

44. The master-receiver of claim **42**, wherein the service request message includes a receiver identifier and the receiver identifier is associated with the client-receiver.

45. The master-receiver of claim **26**, wherein the transceiver communicates with the client-receiver through an Ethernet communication link.

46. The master-receiver of claim **26**, wherein the transceiver communicates with the client-receiver through a powerline communication link.

47. The master-receiver of claim **26**, wherein the transceiver communicates with the client-receiver through a telephone line communication link.

48. The master-receiver of claim **26**, wherein the transceiver communicates with the client-receiver through a wireless communication link.

49. The master-receiver of claim **26**, wherein the transceiver communicates with the client-receiver through a coaxial cable.

50. A master-receiver in a subscriber network system having a headend in two-way communication with the master-receiver, which is in two-way communication with a client-receiver, wherein the master-receiver receives an encrypted service instance from the headend of the subscriber network and re-transmits the service instance to the client-receiver, the master-receiver comprising:

a port coupled to a communication link coupling the master-receiver to the headend;

a first transceiver coupled to the port adapted to receive entitlement messages from the headend and to transmit messages to the headend;

a second transceiver in communication with the client-receiver adapted to transmit information including the service instance to the client-receiver and receive messages from the client-receiver; and

a processor in communication with the first transceiver and the second transceiver, the processor adapted to determine whether to decrypt the encrypted service instance and re-encrypt the service instance using a dynamically selected encryption scheme, wherein the processor uses at least one message of the received client-receiver messages to dynamically select the encryption scheme, and

a memory having a client-receiver type table stored therein, wherein the processor uses the client-receiver type table and the at least one message to dynamically select the encryption scheme.

51. The master-receiver of claim **50**, wherein responsive to a message received at the master-receiver, the processor suspends determining whether to decrypt and re-encrypt the service instance and transmits the service instance to the client-receiver according to parameters established by the headend.

52. The master-receiver of claim **50**, wherein responsive to a message received at the master-receiver, the master-receiver suspends transmitting the service instance to the client-receiver.

53. The master-receiver of claim **50**, wherein the received client-receiver messages include at least one message conforming to the Universal Plug and Play (UPnP) standard.

54. The master-receiver of claim **50**, wherein the received client-receiver messages include at least one message conforming to the Jini standard.

55. The master-receiver of claim **50**, wherein the received client-receiver messages include at least one message conforming to the Open Service Gateway Initiative (OSGI) standard.

56. The master-receiver of claim **50**, wherein the processor further includes an entitlement management module adapted to generate a secure message that communicates entitlements to the client-receiver for the encrypted service.

57. The master-receiver of claim **56**, wherein the of the secure message includes content and an authentication token, which is a digitally signed hash digest of at least a portion of the secure message content, and the entitlement management module generates the hash digest and uses a private key of a public key-private key pair of the master-receiver to digitally sign the hash digest.

58. The master-receiver of claim **56**, wherein the entitlement management module uses at least a portion of a shared secret as an input to a hash function to generate a hash digest, and the shared secret is shared between the master-receiver and the client-receiver, and the secure message includes the hash digest as an authentication token.

59. The master-receiver of claim **56**, wherein the content of the secure message is encrypted by the entitlement management module using a public key of a public key-private key pair of the client-receiver.

60. The master-receiver of claim **50**, wherein a plurality of service instances including the encrypted service instance are received by the port through the communication link, and further including:

a user interface adapted to receive user input for selecting a given service instance of the plurality of service instances;

a plurality of tuners coupled to the port, the plurality of tuners including a first tuner tuned to the encrypted service instance and a second tuner for tuning to the given selected service instance; and a processor coupled to the user interface adapted to selectively tune the second tuner to the given selected service instance.

61. The master-receiver of claim **50**, wherein the second transceiver communicates with the client-receiver through an Ethernet communication link.

62. The master-receiver of claim **50**, wherein the second transceiver communicates with the client-receiver through a powerline communication link.

63. The master-receiver of claim **50**, wherein the second transceiver communicates with the client-receiver through a telephone line communication link.

64. The master-receiver of claim **50**, wherein the second transceiver communicates with the client-receiver through a wireless communication link.

65. The master-receiver of claim **50**, wherein the second transceiver communicates with the client-receiver through a coaxial cable.

66. A method of providing a service instance to a client-receiver, which is coupled to a master-receiver in a subscriber network having a headend in two-way communication with the master-receiver, the method implemented in the master-receiver and comprising the steps of:

receiving a message from the client-receiver, the message having client-receiver type information included therein,

receiving content of a service instance;

dynamically determining an encryption scheme for encrypting the received content of the service instance wherein the client-receiver type information is used to determine the encryption scheme; and

determining whether to encrypt the received content of the service instance according to the dynamically determined encryption scheme.

67. The method of claim **66**, further including the steps of:

determining whether the received content of the service instance is encrypted; and

responsive to both determining the received content of the service instance is not encrypted and determining to not encrypt the received content of the service instance according to the dynamically determined encryption scheme, transmitting the received content of the service instance to the client-receiver.

68. The method of claim **66**, further including the steps of:

determining whether the received content of the service instance is encrypted; and

responsive to both determining the received content of the service instance is encrypted and determining to not encrypt the received content of the service instance according to the dynamically determined encryption scheme, transmitting the received content of the service instance to the client-receiver.

69. The method of claim **66**, further including the steps of:

determining whether the received content of the service instance is encrypted; and

responsive to both determining the received content of the service instance is not encrypted and determining to encrypt the received content of the service instance according to the dynamically determined encryption scheme:

encrypting the received content according to the dynamically determined encryption scheme, wherein the step of encrypting the received content includes the act of converting the received content to an encrypted content; and

transmitting the encrypted content to the client-receiver.

70. The method of claim **66**, further including the steps of:

determining whether the received content of the service instance is encrypted; and

responsive to both determining the received content of the service instance is encrypted and determining to encrypt the received content of the service instance according to the dynamically determined encryption scheme:

decrypting the received content of the service instance, wherein the step of decrypting the received content includes the act of converting the received content of the service instance to an unencrypted content;

encrypting the unencrypted content according to the dynamically determined encryption scheme, wherein the step of encrypting the unencrypted content includes the act of converting the unencrypted content to an encrypted content; and

transmitting the encrypted content to the client-receiver.

71. The method of claim **66**, prior to step receiving content of the service instance, further including the steps of:

generating a secure message for the client-receiver entitling the client-receiver access to the encrypted service instance; and

transmitting the secure message to the client-receiver, thereby entitling the client-receiver to access the encrypted service instance.

72. The method of claim **66**, prior to step receiving content of the service instance, further including the steps of:

generating a secure message for the client-receiver disentitling the client-receiver access to the encrypted service instance; and

transmitting the secure message to the client-receiver, thereby disentitling the client-receiver to access the encrypted service instance.

73. The method of claim **66**, prior to step receiving content of the service instance, further including the steps of:

receiving a message from the client-receiver; and

responsive to receiving the message, transmitting a service request message to the headend for the service instance, whereby the service instance is received at the master-receiver in response to the transmitted service request message.

* * * * *