US 20020025042A1

(19) United States

(12) Patent Application Publication (10) Pub. No.: US 2002/0025042 A1

Saito (43) Pub. Date: Feb. 28, 2002

(54) SCHEME FOR TRANSFERRING COPYRIGHT PROTECTED CONTENTS DATA USING RADIO LINK LAYER AUTHENTICATION/ENCRYPTION

(75) Inventor: **Takeshi Saito**, Tokyo (JP)

Correspondence Address:
OBLON SPIVAK MCCLELLAND MAIER & NEUSTADT PC
FOURTH FLOOR
1755 JEFFERSON DAVIS HIGHWAY
ARLINGTON, VA 22202 (US)

(73) Assignee: **KABUSHIKI KAISHA TOSHIBA**, 1-1, shibaura 1-chome, Minato-ku (JP)

(21) Appl. No.: **09/934,674**

(22) Filed: **Aug. 23, 2001**

(30) **Foreign Application Priority Data**

Aug. 23, 2000 (JP) 2000-252882

Feb. 5, 2001 (JP) 2001-028544

Publication Classification

(51) **Int. Cl.**[7] **H04K 1/00**

(52) **U.S. Cl.** **380/258**; 380/270

(57) **ABSTRACT**

Between a transmitting device and a receiving device, a first authentication and key exchange procedure depending on a radio link layer network is carried out, and then a whole or a part of a second authentication and key exchange procedure depending on the copyright protected contents data is carried out by using the cipher communication using a first encryption key that is shared between the transmitting device and the receiving device by the first authentication and key exchange procedure, so that the contents data transfer by the cipher communication using a second encryption key can be carried out only between legitimate pair of the transmitting device and the receiving device that can successfully complete the first authentication.

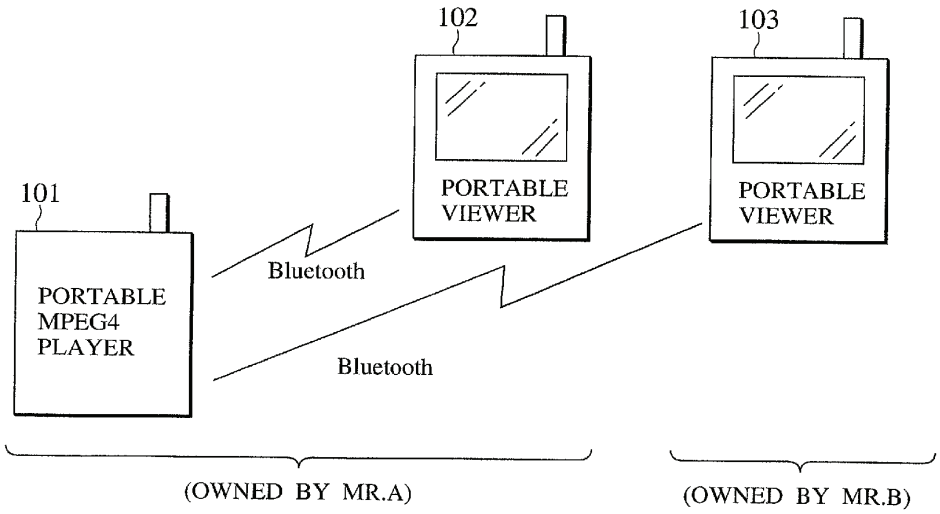

FIG.1

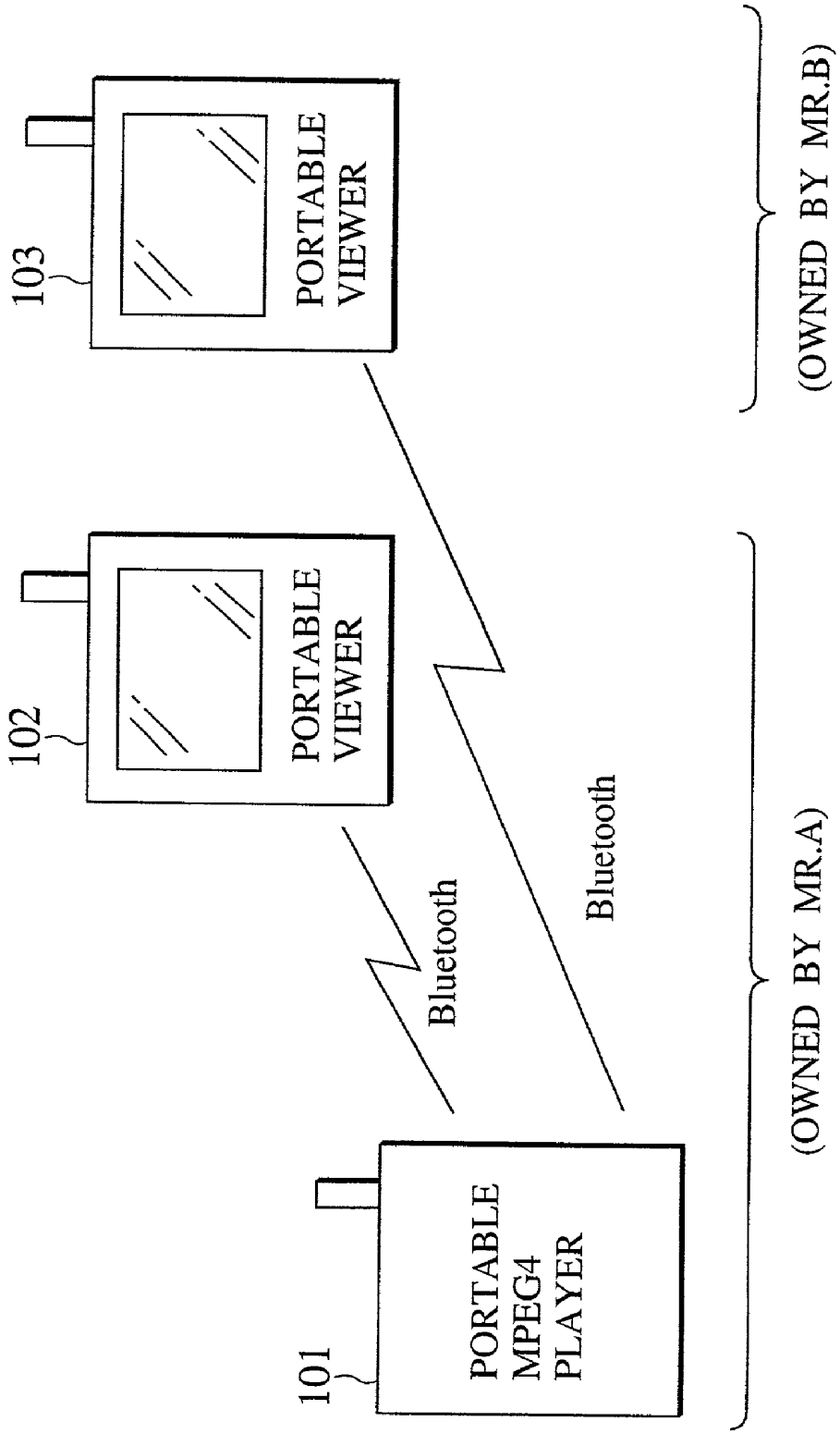
103
PORTABLE VIEWER
102
PORTABLE VIEWER
Bluetooth
Bluetooth
101
PORTABLE MPEG4 PLAYER
(OWNED BY MR.B)
(OWNED BY MR.A)

FIG.2

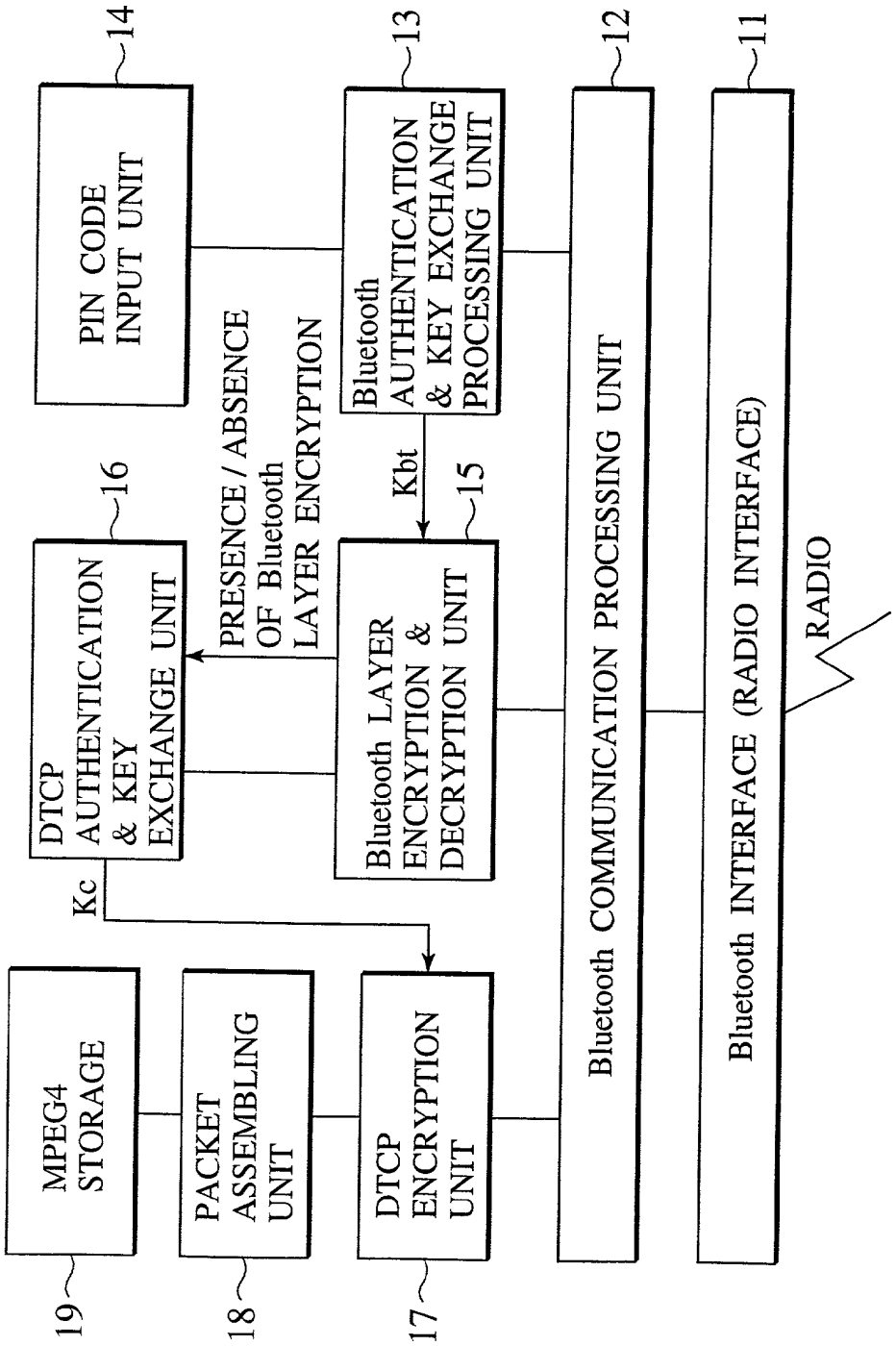
14
PIN CODE INPUT UNIT
13
Bluetooth AUTHENTICATION & KEY EXCHANGE PROCESSING UNIT
12
Bluetooth COMMUNICATION PROCESSING UNIT
11
Bluetooth INTERFACE (RADIO INTERFACE)
RADIO
16
DTCP AUTHENTICATION & KEY EXCHANGE UNIT
PRESENCE / ABSENCE OF Bluetooth LAYER ENCRYPTION
Kbt
15
Bluetooth LAYER ENCRYPTION & DECRYPTION UNIT
Kc
19
MPEG4 STORAGE
18
PACKET ASSEMBLING UNIT
17
DTCP ENCRYPTION UNIT

FIG.3

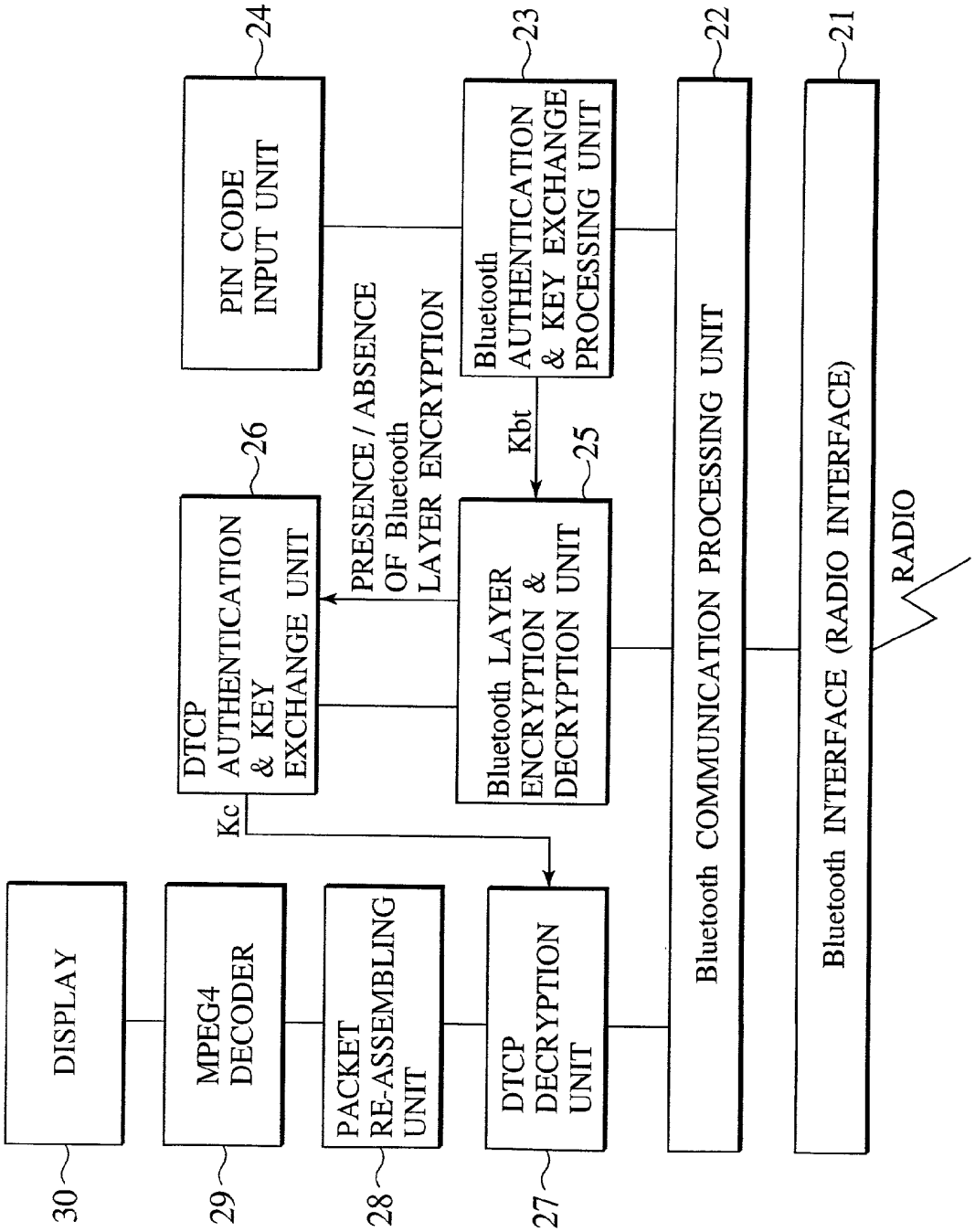
24
PIN CODE INPUT UNIT
23
Bluetooth AUTHENTICATION & KEY EXCHANGE PROCESSING UNIT
22
Bluetooth COMMUNICATION PROCESSING UNIT
21
Bluetooth INTERFACE (RADIO INTERFACE)
RADIO
PRESENCE / ABSENCE OF Bluetooth LAYER ENCRYPTION
Kbt
26
DTCP AUTHENTICATION & KEY EXCHANGE UNIT
25
Bluetooth LAYER ENCRYPTION & DECRYPTION UNIT
Kc
30
DISPLAY
29
MPEG4 DECODER
28
PACKET RE-ASSEMBLING UNIT
27
DTCP DECRYPTION UNIT

FIG.4

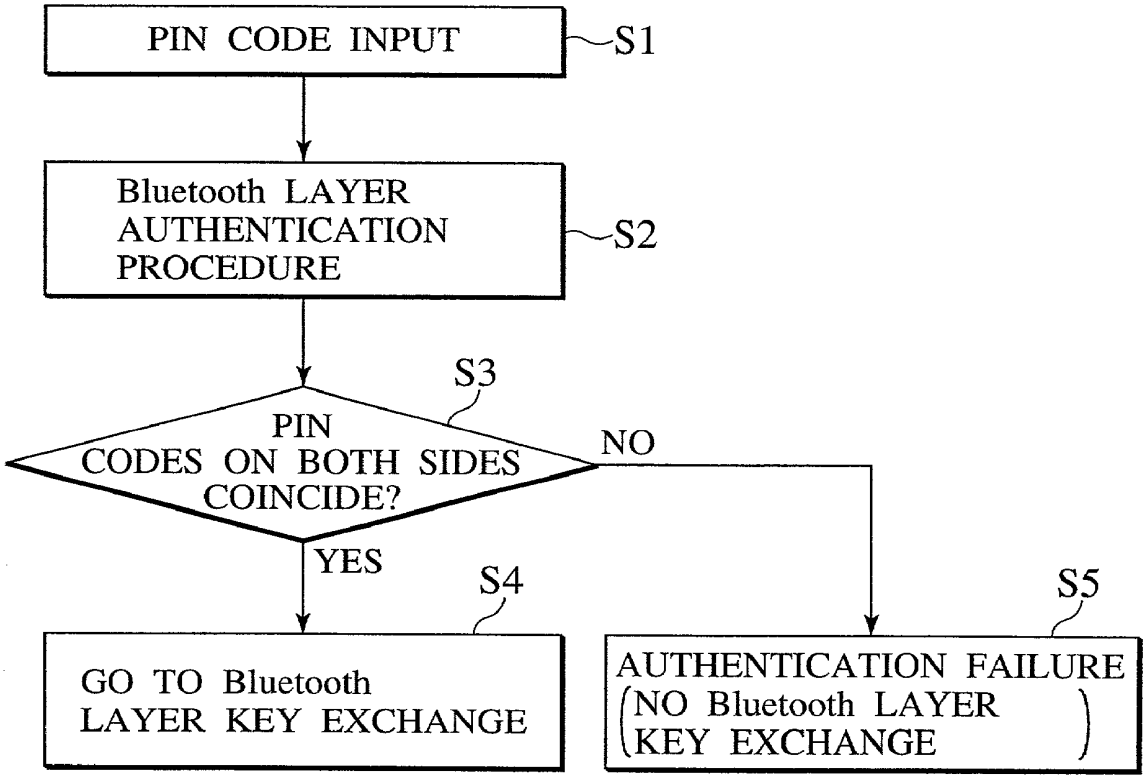
PIN CODE INPUT
S1
Bluetooth LAYER AUTHENTICATION PROCEDURE
S2
S3
PIN CODES ON BOTH SIDES COINCIDE?
NO
YES
S4
GO TO Bluetooth LAYER KEY EXCHANGE
S5
AUTHENTICATION FAILURE (NO Bluetooth LAYER KEY EXCHANGE)

FIG.5

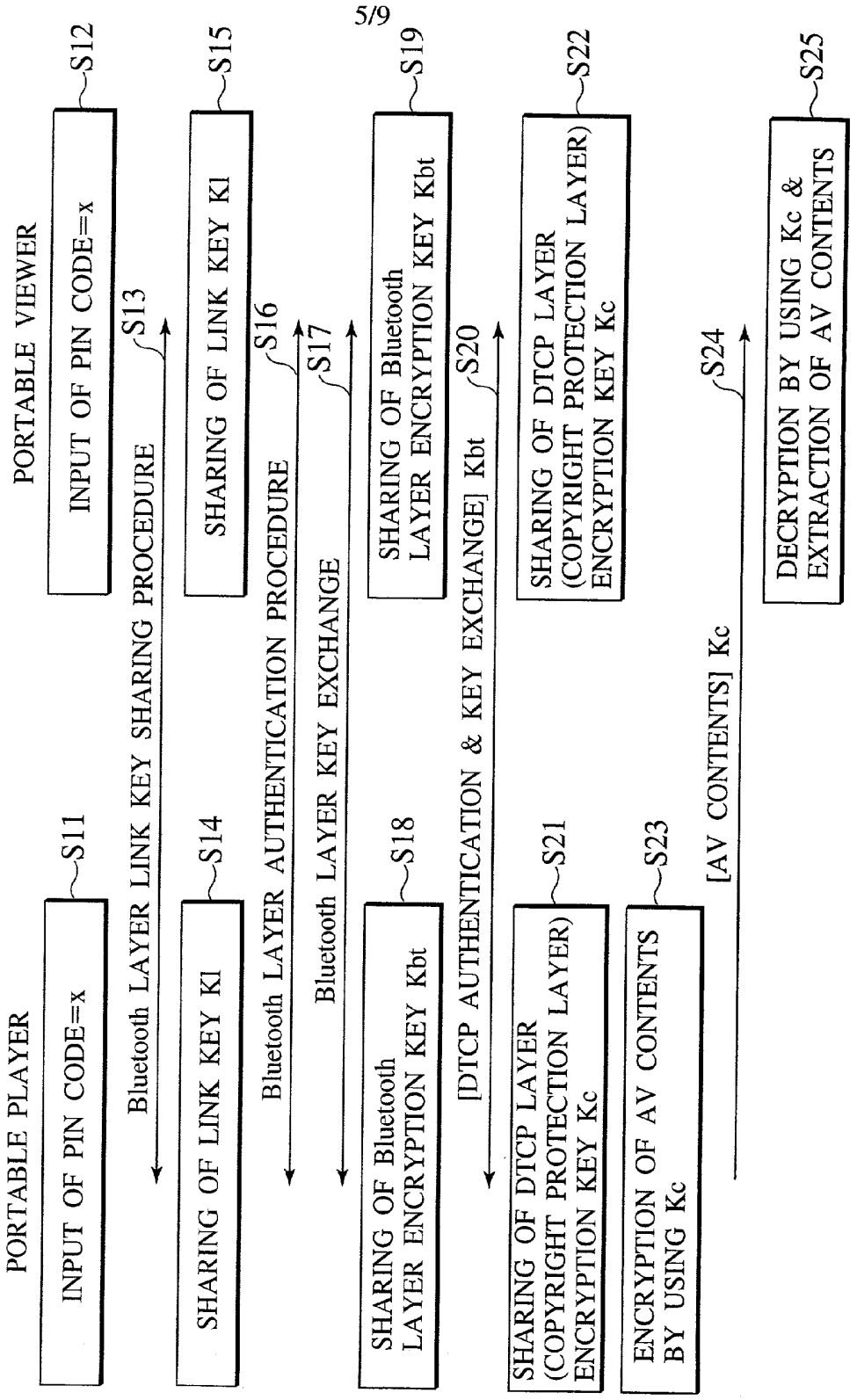
PORTABLE PLAYER
PORTABLE VIEWER
INPUT OF PIN CODE=x
S11
S12
Bluetooth LAYER LINK KEY SHARING PROCEDURE
S13
SHARING OF LINK KEY Kl
S14
S15
Bluetooth LAYER AUTHENTICATION PROCEDURE
S16
Bluetooth LAYER KEY EXCHANGE
S17
SHARING OF Bluetooth LAYER ENCRYPTION KEY Kbt
S18
S19
[DTCP AUTHENTICATION & KEY EXCHANGE] Kbt
S20
SHARING OF DTCP LAYER (COPYRIGHT PROTECTION LAYER) ENCRYPTION KEY Kc
S21
S22
ENCRYPTION OF AV CONTENTS BY USING Kc
S23
[AV CONTENTS] Kc
S24
DECRYPTION BY USING Kc & EXTRACTION OF AV CONTENTS
S25

FIG.6

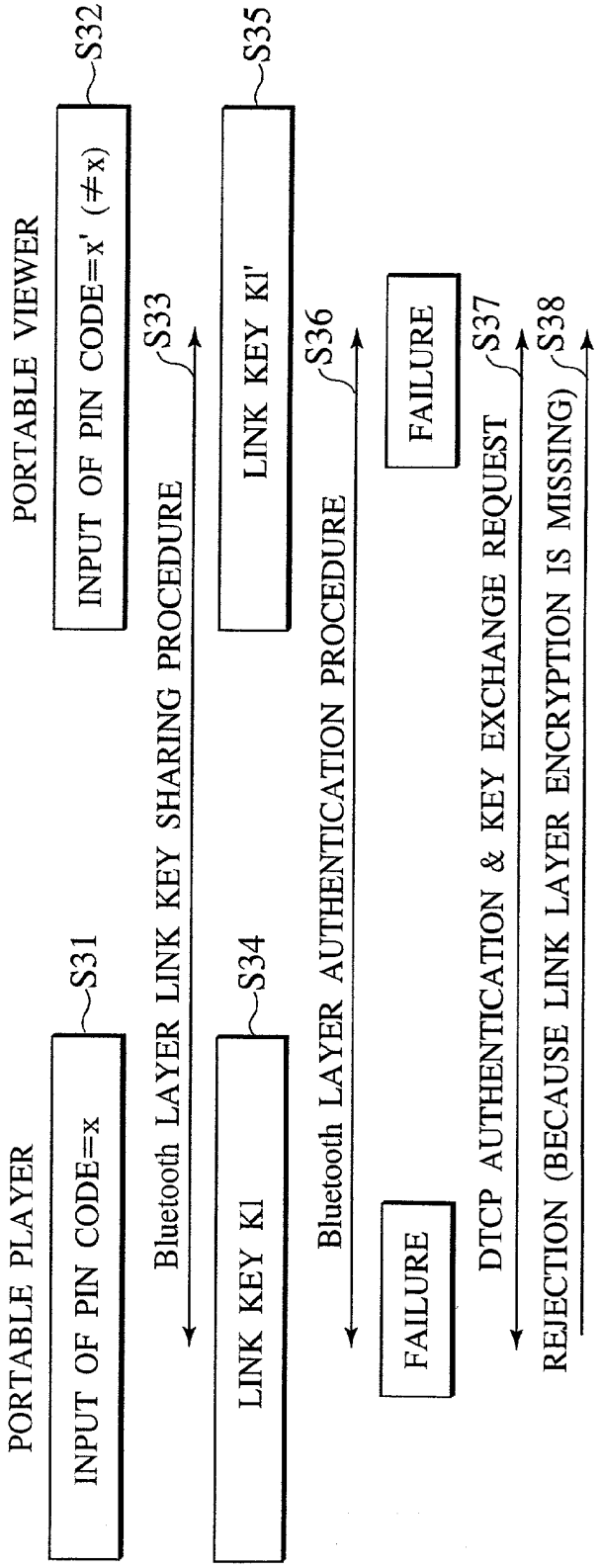
PORTABLE PLAYER
PORTABLE VIEWER
INPUT OF PIN CODE=x
S31
INPUT OF PIN CODE=x' (≠x)
S32
Bluetooth LAYER LINK KEY SHARING PROCEDURE
S33
LINK KEY Kl
S34
LINK KEY Kl'
S35
Bluetooth LAYER AUTHENTICATION PROCEDURE
S36
FAILURE
FAILURE
DTCP AUTHENTICATION & KEY EXCHANGE REQUEST
S37
REJECTION (BECAUSE LINK LAYER ENCRYPTION IS MISSING)
S38

FIG.7

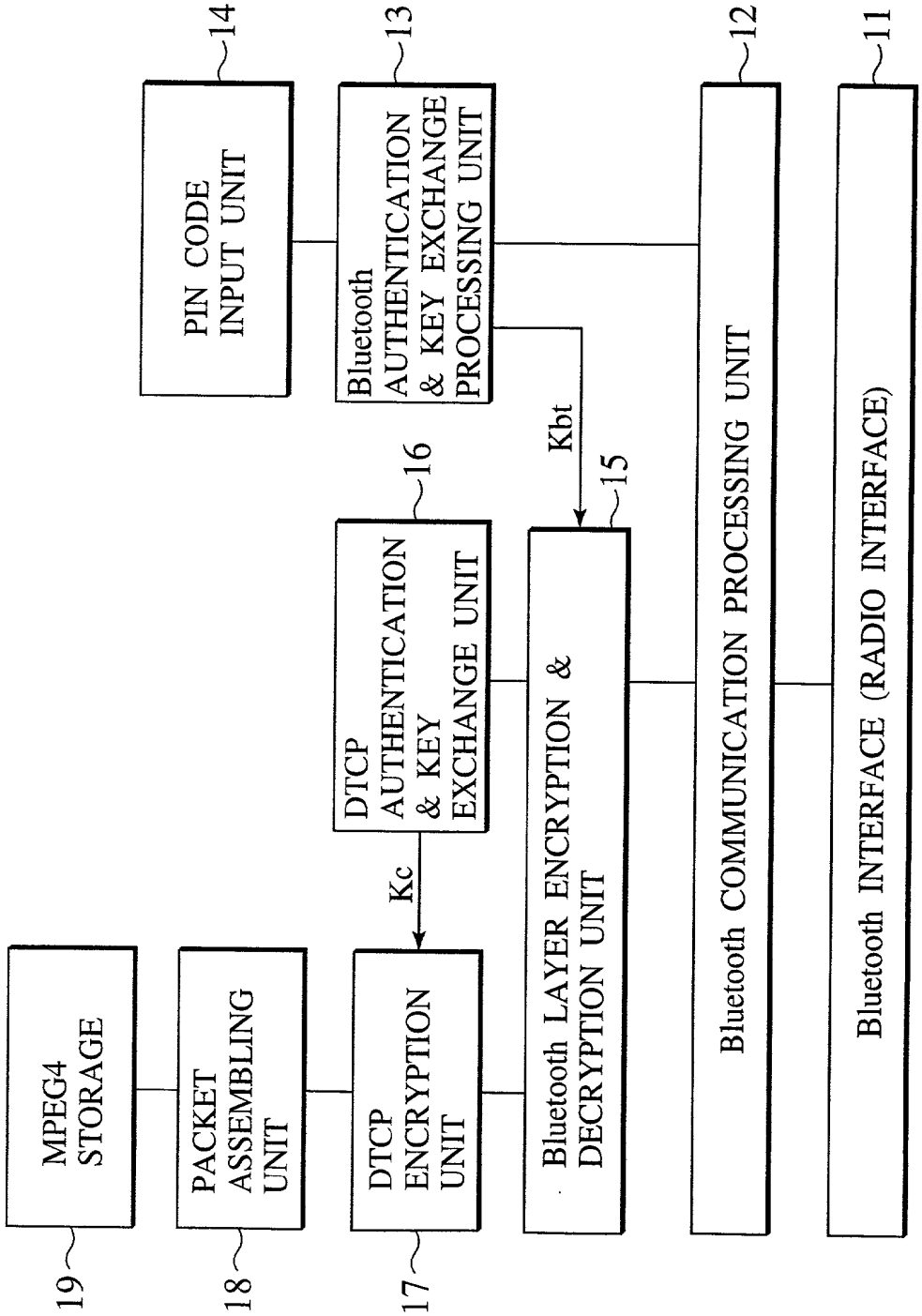
PIN CODE INPUT UNIT
14
Bluetooth AUTHENTICATION & KEY EXCHANGE PROCESSING UNIT
13
Kbt
DTCP AUTHENTICATION & KEY EXCHANGE UNIT
16
Kc
Bluetooth LAYER ENCRYPTION & DECRYPTION UNIT
15
Bluetooth COMMUNICATION PROCESSING UNIT
12
Bluetooth INTERFACE (RADIO INTERFACE)
11
MPEG4 STORAGE
19
PACKET ASSEMBLING UNIT
18
DTCP ENCRYPTION UNIT
17

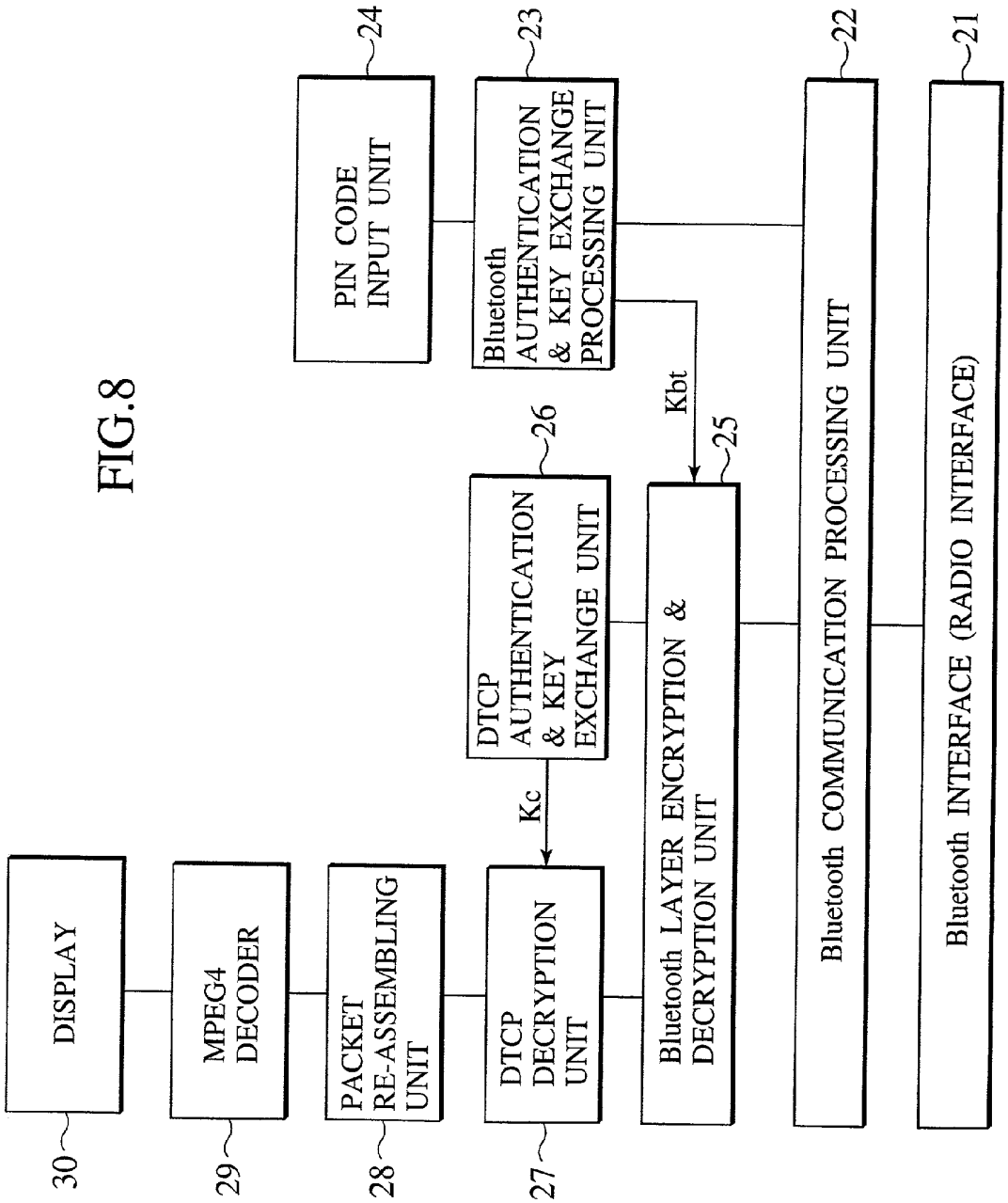
DISPLAY
30
MPEG4 DECODER
29
PACKET RE-ASSEMBLING UNIT
28
DTCP DECRYPTION UNIT
27
Kc
DTCP AUTHENTICATION & KEY EXCHANGE UNIT
26
PIN CODE INPUT UNIT
24
Bluetooth AUTHENTICATION & KEY EXCHANGE PROCESSING UNIT
23
Kbt
Bluetooth LAYER ENCRYPTION & DECRYPTION UNIT
25
Bluetooth COMMUNICATION PROCESSING UNIT
22
Bluetooth INTERFACE (RADIO INTERFACE)
21

FIG.8

FIG.9

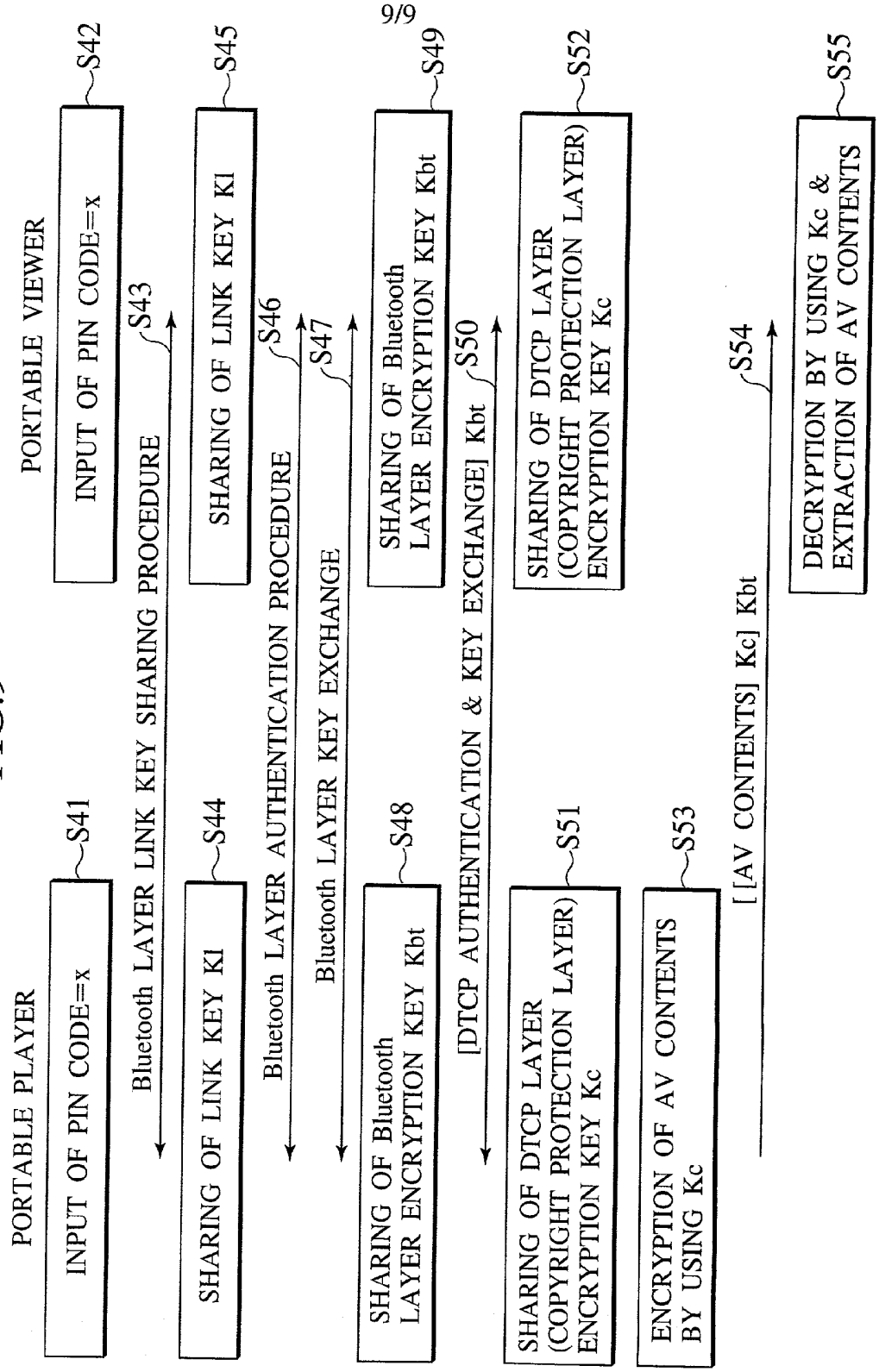
PORTABLE PLAYER
PORTABLE VIEWER
INPUT OF PIN CODE=x
S41
S42
Bluetooth LAYER LINK KEY SHARING PROCEDURE
S43
SHARING OF LINK KEY KI
S44
SHARING OF LINK KEY KI
S45
Bluetooth LAYER AUTHENTICATION PROCEDURE
S46
Bluetooth LAYER KEY EXCHANGE
S47
SHARING OF Bluetooth LAYER ENCRYPTION KEY Kbt
S48
SHARING OF Bluetooth LAYER ENCRYPTION KEY Kbt
S49
[DTCP AUTHENTICATION & KEY EXCHANGE] Kbt
S50
SHARING OF DTCP LAYER (COPYRIGHT PROTECTION LAYER) ENCRYPTION KEY Kc
S51
SHARING OF DTCP LAYER (COPYRIGHT PROTECTION LAYER) ENCRYPTION KEY Kc
S52
ENCRYPTION OF AV CONTENTS BY USING Kc
S53
[[AV CONTENTS] Kc] Kbt
S54
DECRYPTION BY USING Kc & EXTRACTION OF AV CONTENTS
S55

SCHEME FOR TRANSFERRING COPYRIGHT PROTECTED CONTENTS DATA USING RADIO LINK LAYER AUTHENTICATION/ENCRYPTION

BACKGROUND OF THE INVENTION

[0001] 1. FIELD OF THE INVENTION

[0002] The present invention relates to a scheme for transferring data that require the copyright protection, through radio.

[0003] 2. DESCRIPTION OF THE RELATED ART

[0004] In recent years, the digital network technology has been developing rapidly. There is no limit to the advance of the network technology such as portable telephone and Internet, and its applications are not limited to just the speech communications and becoming more diverse. The typical examples of such diverse applications include the music distribution on the Internet and the music distribution through a radio data network (i-mode, etc.) using portable telephones.

[0005] On the other hand, a new field called digital home electronics is also attracting much attention. This is a new home electronics technology utilizing the digital technology, and in particular, fields such as digital broadcasting and "digital AV home electronics" that utilizes the digital AV technology such as MD, DVD, etc. are expected to have considerable growth potential.

[0006] A field of "network home electronics" can be regarded as an amalgamation of these fields. In this field, the digital AV data (MPEG2 video, etc.) can be exchanged through networks such as IEEE 1394, and there is potential for newly creating many applications.

[0007] Under such circumstances, the problem of the copyright protection requires much consideration. The digital data have an advantageous feature in that they can be easily processed or stored without any degradation, but this feature in turn implies that they can be easily copied. Consequently, the digital data (such as those of movies or music, for example) that are intended to be purchased in exchange to some payment can be easily copied and acquired or transferred illegally.

[0008] For this reason, it is important to construct a mechanism for preventing the illegal act with respect to the copyright protected digital data.

[0009] A representative example of such a mechanism is DTCP (Digital Transmission Contents Protection) of the IEEE 1394. This mechanism prevents the eavesdropping by the third party by carrying out the authentication and key exchange procedure between a transmitting device and a receiving device of the AV data on the IEEE 1394 so as to share an encryption key for encrypting or decrypting the AV data, and transferring the AV data on the IEEE 1394 after encrypting the AV data by using this encryption key. This mechanism also incorporates a mechanism for preventing the illegal copy by an illegal receiving device by permitting the above described authentication and the key exchange (more specifically, the exchange of Certificate) only between those devices for which the safety is guaranteed in advance.

[0010] However, this mechanism presupposes the wired network such as IEEE 1394 or USB. In the case of the AV data transfer using the radio network, the AV data can be transferred between any devices (there is no need to connect devices through a cable so that it is possible to receive the AV data by simply commanding transmission via the radio), so that the third party can eavesdrop the AV data and the illegal act cannot be prevented.

BRIEF SUMMARY OF THE INVENTION

[0011] It is therefore an object of the present invention to provide a scheme for transferring copyright protected contents data which is capable of realizing the secure copyright protection even under the radio environment.

[0012] According to one aspect of the present invention there is provided a transmitting device for transmitting copyright protected contents data to a receiving device through radio communications, transmitting device comprising: a first authentication unit configured to carry out a first authentication with the receiving device, for judging whether the receiving device is a device that is allowed to communicate with the transmitting device or not, on a radio link layer of the radio communications; a first key exchange unit configured to generate a first encryption key and share the first encryption key with the receiving device when the first authentication with the receiving device by the first authentication unit is success; a second authentication unit configured to carry out a second authentication with the receiving device, for protecting copyright of the contents data to be transmitted, through an encrypted radio communication using the first encryption key; a second key exchange unit configured to generate a second encryption key and share the second encryption key with the receiving device when the second authentication with the receiving device by the second authentication unit is success; and a communication unit configured to transmit the contents data to the receiving device through an encrypted communication path which is encrypted by using the second encryption key and provided on the radio link layer.

[0013] According to another aspect of the present invention there is provided a transmitting device for transmitting copyright protected contents data to a receiving device through radio communications, transmitting device comprising: a first authentication unit configured to carry out a first authentication with the receiving device, for judging whether the receiving device is a device that is allowed to communicate with the transmitting device or not, on a radio link layer of the radio communications; a first key exchange unit configured to generate a first encryption key and share the first encryption key with the receiving device when the first authentication with the receiving device by the first authentication unit is success; a second authentication unit configured to carry out a second authentication with the receiving device, for protecting copyright of the contents data to be transmitted, through an encrypted radio communication using the first encryption key; a second key exchange unit configured to generate a second encryption key and share the second encryption key with the receiving device when the second authentication with the receiving device by the second authentication unit is success; and a communication unit configured to set up an encrypted communication path which is encrypted by using the second encryption key on the encrypted radio communication which is encrypted by using the first encryption key, and transmit the contents data to the receiving device through the encrypted communication path.

[0014] According to another aspect of the present invention there is provided a receiving device for receiving copyright protected contents data transmitted from a transmitting device through radio communications, the receiving device comprising: a first authentication unit configured to carry out a first authentication with the transmitting device, for enabling the receiving device to operate as a device that is allowed to communicate with the transmitting device, on a radio link layer of the radio communications; a first key exchange unit configured to generate a first encryption key and share the first encryption key with the transmitting device when the first authentication with the transmitting device by the first authentication unit is success; a second authentication unit configured to carry out a second authentication with the transmitting device, for protecting copyright of the contents data to be transmitted, through an encrypted radio communication using the first encryption key; a second key exchange unit configured to generate a second encryption key and share the second encryption key with the transmitting device when the second authentication with the transmitting device by the second authentication unit is success; and a communication unit configured to receive the contents data transmitted from the transmitting device through an encrypted communication path which is encrypted by using the second encryption key and provided on the radio link layer.

[0015] According to another aspect of the present invention there is provided a receiving device for receiving copyright protected contents data transmitted from a transmitting device through radio communications, the receiving device comprising: a first authentication unit configured to carry out a first authentication with the transmitting device, for enabling the receiving device to operate as a device that is allowed to communicate with the transmitting device, on a radio link layer of the radio communications; a first key exchange unit configured to generate a first encryption key and share the first encryption key with the transmitting device when the first authentication with the transmitting device by the first authentication unit is success; a second authentication unit configured to carry out a second authentication with the transmitting device, for protecting copyright of the contents data to be transmitted, through an encrypted radio communication using the first encryption key; a second key exchange unit configured to generate a second encryption key and share the second encryption key with the transmitting device when the second authentication with the transmitting device by the second authentication unit is success; and a communication unit configured to set up an encrypted communication path which is encrypted by using the second encryption key on the encrypted radio communication which is encrypted by using the first encryption key, and receive the contents data transmitted from the transmitting device through the encrypted communication path.

[0016] According to another aspect of the present invention there is provided a radio communication system, comprising a transmitting device for transmitting copyright protected contents data through radio communications, and a receiving device for receiving the contents data transmitted from the transmitting device, each one of the transmitting device and the receiving device having: a first authentication unit configured to carry out a first authentication between the transmitting device and the receiving device, for judging whether the transmitting device and the receiving device are devices that are allowed to communicate with the transmitting device or not, on a radio link layer of the radio communications; a first key exchange unit configured to generate a first encryption key and share the first encryption key between the transmitting device and the receiving device when the first authentication between the transmitting device and the receiving device by the first authentication unit is success; a second authentication unit configured to carry out a second authentication between the transmitting device and the receiving device, for protecting copyright of the contents data to be transmitted, through an encrypted radio communication using the first encryption key; a second key exchange unit configured to generate a second encryption key and share the second encryption key between the transmitting device and the receiving device when the second authentication between the transmitting device and the receiving device by the second authentication unit is success; and a communication unit configured to transfer the contents data from the transmitting device to the receiving device through an encrypted communication path which is encrypted by using the second encryption key and provided on the radio link layer.

[0017] According to another aspect of the present invention there is provided a radio communication system, comprising a transmitting device for transmitting copyright protected contents data through radio communications, and a receiving device for receiving the contents data transmitted from the transmitting device, each one of the transmitting device and the receiving device having: a first authentication unit configured to carry out a first authentication between the transmitting device and the receiving device, for judging whether the transmitting device and the receiving device are devices that are allowed to communicate with the transmitting device or not, on a radio link layer of the radio communications; a first key exchange unit configured to generate a first encryption key and share the first encryption key between the transmitting device and the receiving device when the first authentication between the transmitting device and the receiving device by the first authentication unit is success; a second authentication unit configured to carry out a second authentication between the transmitting device and the receiving device, for protecting copyright of the contents data to be transmitted, through an encrypted radio communication using the first encryption key; a second key exchange unit configured to generate a second encryption key and share the second encryption key between the transmitting device and the receiving device when the second authentication between the transmitting device and the receiving device by the second authentication unit is success; a communication unit configured to set up an encrypted communication path which is encrypted by using the second encryption key on the encrypted radio communication which is encrypted by using the first encryption key, and transfer the contents data from the transmitting device to the receiving device through the encrypted communication path.

[0018] According to another aspect of the present invention there is provided a contents data transfer method in a radio communication system comprising a transmitting device for transmitting copyright protected contents data through radio communications and a receiving device for receiving the contents data transmitted from the transmitting device, the contents data transfer method comprising: carrying out a first authentication between the transmitting

device and the receiving device, for judging whether the transmitting device and the receiving device are devices that are allowed to communicate with the transmitting device or not, on a radio link layer of the radio communications; generating a first encryption key and sharing the first encryption key between the transmitting device and the receiving device when the first authentication between the transmitting device and the receiving device is success; carrying out a second authentication between the transmitting device and the receiving device, for protecting copyright of the contents data to be transmitted, through an encrypted radio communication using the first encryption key; generating a second encryption key and sharing the second encryption key between the transmitting device and the receiving device when the second authentication between the transmitting device and the receiving device is success; and transferring the contents data from the transmitting device to the receiving device through an encrypted communication path which is encrypted by using the second encryption key and provided on the radio link layer.

[**0019**] According to another aspect of the present invention there is provided a contents data transfer method in a radio communication system comprising a transmitting device for transmitting copyright protected contents data through radio communications and a receiving device for receiving the contents data transmitted from the transmitting device, the contents data transfer method comprising: carrying out a first authentication between the transmitting device and the receiving device, for judging whether the transmitting device and the receiving device are devices that are allowed to communicate with the transmitting device or not, on a radio link layer of the radio communications; generating a first encryption key and sharing the first encryption key between the transmitting device and the receiving device when the first authentication between the transmitting device and the receiving device is success; carrying out a second authentication between the transmitting device and the receiving device, for protecting copyright of the contents data to be transmitted, through an encrypted radio communication using the first encryption key; generating a second encryption key and sharing the second encryption key between the transmitting device and the receiving device when the second authentication between the transmitting device and the receiving device is success; and setting up an encrypted communication path which is encrypted by using the second encryption key on the encrypted radio communication which is encrypted by using the first encryption key, and transferring the contents data from the transmitting device to the receiving device through the encrypted communication path.

[**0020**] Other features and advantages of the present invention will become apparent from the following description taken in conjunction with the accompanying drawings.

BRIEF DESCRIPTION OF THE DRAWINGS

[**0021**] **FIG. 1** is a schematic diagram showing an exemplary configuration of a radio communication system according to the first embodiment of the present invention.

[**0022**] **FIG. 2** is a block diagram showing an exemplary internal configuration of a portable PEG4 player in the radio communication system of **FIG. 1**.

[**0023**] **FIG. 3** is a block diagram showing an exemplary internal configuration of a portable viewer in the radio communication system of **FIG. 1**.

[**0024**] **FIG. 4** is a flow chart showing an outline of a Bluetooth layer authentication procedure in the radio communication system of **FIG. 1**.

[**0025**] **FIG. 5** is a sequence chart showing an exemplary operation sequence between a portable MPEG4 player and a portable viewer which are a legitimate pair in the radio communication system of **FIG. 1**.

[**0026**] **FIG. 6** is a sequence chart showing an exemplary operation sequence between a portable MPEG4 player and a portable viewer which are not a legitimate pair in the radio communication system of **FIG. 1**.

[**0027**] **FIG. 7** is a block diagram showing an exemplary internal configuration of a portable PEG4 player in a radio communication system according to the second embodiment of the present invention.

[**0028**] **FIG. 8** is a block diagram showing an exemplary internal configuration of a portable viewer in a radio communication system according to the second embodiment of the present invention.

[**0029**] **FIG. 9** is a sequence chart showing an exemplary operation sequence between a portable MPEG4 player and a portable viewer which are a legitimate pair in a radio communication system according to the second embodiment of the present invention.

DETAILED DESCRIPTION OF THE INVENTION

[**0030**] Referring now to **FIG. 1** to **FIG. 6**, the first embodiment of the present invention will be described in detail.

[**0031**] **FIG. 1** shows an exemplary configuration of a radio communication system according to the first embodiment. As shown in **FIG. 1, a** portable MPEG4 player **101** to be a source device and a portable viewer **102** to be a corresponding sink device are located within an area in which a connection by a local area radio network is possible (it is assumed that each one of the portable MPEG4 player **101** and the portable viewer **102** has a radio interface for this local area radio network).

[**0032**] Here, as shown in **FIG. 1**, suppose that a portable viewer **103** (which is assumed to have the same basic configuration as the portable viewer **102**) is also located within an area in which a connection by the local area radio network is possible, besides the portable MPEG4 player **101** and the portable viewer **102**.

[**0033**] Namely, these three portable terminals are existing in the same radio LAN (a single pico-net in the case of the Bluetooth), within an area in which the MPEG4 video can be transferred from the portable MPEG4 player to either portable viewer via the Bluetooth. Then, it is assumed that the portable MPEG4 player **101** and the portable viewer **102** are owned by the same person, say Mr. A, (they are intended to be used as a pair by Mr. A). whereas the portable viewer **103** is owned by a person other than Mr. A, say Mr. B (it is not intended to be used by Mr. A). Note that the portable viewer **103** will be considered for the sake of simplicity, but

any other portable viewer owned by a person other than Mr. A that is existing in the connectable area can be treated similarly as the portable viewer **103**.

[**0034**] Here, it is also assumed that the MPEG4 video (MPEG4 data) to be transferred should be transferred after applying the copyright protection.

[**0035**] Note also that the local area radio network is assumed to be the Bluetooth here. The Bluetooth is a kind of the radio LAN characterized by its low cost and low power consumption, which is expected to be implemented in many portable terminals and home electronics (see documents available at "http://www.bluetooth.com" for further details).

[**0036**] In the following, the configuration for enabling the transfer of the MPEG4 video from the portable MPEG4 player **101** only with respect to the portable viewer **102** (such that the MPEG4 video can be playbacked only by the portable viewer **102**) under the circumstance shown in **FIG. 1** will be described.

[**0037**] **FIG. 2** shows an exemplary internal configuration of the portable MPEG4 player **101**. As shown in **FIG. 2**, the portable MPEG4 player **101** has a Bluetooth interface (radio interface) **11** for carrying out the physical layer processing of the Bluetooth, and a Bluetooth communication processing unit **12** for carrying out the datalink layer processing of the Bluetooth.

[**0038**] The specifications of the Bluetooth specify the authentication, key exchange and data encryption scheme called "Bluetooth Security". In other words, a scheme for the data encryption and the authentication and key exchange is already defined within the link layer scheme called Bluetooth. The portable MPEG4 player **101** has processing units for carrying out this processing, including a Bluetooth authentication and key exchange processing unit **13** for carrying out the Bluetooth authentication and key exchange procedure (data exchange), a PIN code input unit **14** for entering a PIN code, and a Bluetooth layer encryption and decryption unit **15** for carrying out the encryption of data to be transmitted and the decryption of received data. The authentication at the Bluetooth level is designed such that matching of a code called PIN code (which is given by a number in several digits or a password, or a body information such as fingerprint information, for example) on both sides is required for the success of the authentication.

[**0039**] Besides these, the portable MPEG4 player **101** has an MPEG4 storage **19** for storing MPEG4 AV data, and a packet assembling unit **18** for assembling Bluetooth packets from the MPEG4 AV data. The portable MPEG4 player **101** also has processing units on the copyright protection layer (application level) for transferring the MPEG4 data in encrypted form including a DTCP authentication and key exchange unit **16** for carrying out the DTCP authentication and key exchange procedure (data exchange) and a DTCP encryption unit **17** for encrypting data to be transmitted.

[**0040**] Here, DTCP stands for Digital Transmission Contents Protection, which is the de facto standard copyright protection scheme in the IEEE 1394, USB, etc. This scheme has a mechanism for carrying out the authentication and key exchange between the transmitting device and the receiving device, and transferring the AV data by encrypting them, with respect to the AV data that require the copyright protection (which can be identified as information indicating whether the copyright protection is required or not is attached to the AV data, for example) (see documents available from "http://www.dtla.com" for further details).

[**0041**] **FIG. 3** shows an exemplary internal configuration of the portable viewer **102** (**103**). As shown in **FIG. 3**, the portable viewer **102** has a Bluetooth interface **21**, a Bluetooth communication processing unit **22**, processing units for carrying out the authentication and key exchange and the encryption at the Bluetooth level including a Bluetooth authentication and key exchange processing unit **23** for carrying out the Bluetooth authentication and key exchange procedure (data exchange), a PIN code input unit **24** for entering a PIN code, and a Bluetooth layer encryption and decryption unit **25** for carrying out the encryption of data to be transmitted and the decryption of received data, and processing units for carrying out the authentication and key exchange and the encryption of the AV data (on application level) including a DTCP authentication and key exchange unit **26** for carrying out the DTCP authentication and key exchange procedure (data exchange) and a DTCP encryption unit **27** for decrypting received data.

[**0042**] The portable viewer **102** also has a packet re-assembling unit **28** for re-assembling the MPEG4 data from the Bluetooth packets, an MPEG4 decoder **29** for decoding the MPEG4 data, and a display **30** for displaying the decoded MPEG4 data.

[**0043**] **FIG. 4** shows an outline of the authentication procedure on the Bluetooth layer.

[**0044**] First, at each device (the portable MPEG4 player, the portable viewer), the PIN code is entered (step **S1**). Note that the PIN code can be newly entered at each occasion or can be entered and set up in advance.

[**0045**] Then, the both devices carry out the authentication procedure on the Bluetooth layer (using the Bluetooth authentication and key exchange processing units **13** and **23**) (step **S2**).

[**0046**] The PIN codes are exchanged between the both devices and if the authentication is success as these PIN codes coincide (step **S3** YES), the key exchange procedure on the Bluetooth layer is carried out and the key sharing is realized successfully (step **S4**).

[**0047**] After that, by using the Bluetooth layer key that is shared (by the Bluetooth layer encryption and decryption units **15** and **25**), the DTCP authentication and key exchange (by the DTCP authentication and key exchange units **16** and **26**) can be carried out safely. As a result, the DTCP key is shared and the cipher communication of the MPEG4 data becomes possible (it becomes possible to encrypt data at the DTCP encryption unit **17** and decrypt data at the DTCP decryption unit **27**).

[**0048**] On the other hand, when the authentication is failure as the PIN codes do not coincide (step **S3** NO), the key exchange procedure on the Bluetooth layer is carried out but the key sharing is unsuccessful (step **S5**).

[**0049**] In this case, the Bluetooth layer key will not be shared so that even when the DTCP authentication and key exchange (by the DTCP authentication and key exchange units **16** and **26**) is carried out, the DTCP authentication and key exchange will be unsuccessful (the DTCP key cannot be shared), because the decryption by using an incorrect Blue-

tooth layer key will be carried out. In addition, if the DTCP authentication and key exchange is unsuccessful, even when the MPEG4 data that are encrypted (by using the DTCP key at the DTCP encryption unit **17**) are received, the received MPEG4 data cannot be decrypted because a correct DTCP key is not known at the DTCP decryption unit **27**.

[**0050**] Note that it is also possible to adopt a procedure in which the key exchange procedure on the Bluetooth layer itself is not to be carried out in the case where the authentication fails as the PIN codes of the both devices do not coincide.

[**0051**] Note also that the authentication is considered as success when the PIN codes of the both devices coincide in this embodiment, but alternatively, it is also possible to adopt a scheme in which the authentication is considered as success when the PIN code value of one side and the PIN code value of the other side are in a prescribed relationship (such as a relationship in which a part of the address information is utilized as the user attribute information, for example). Note here that a relationship in which the PIN code values of the both devices coincide can also be regarded as a kind of prescribed relationship.

[**0052**] Here, the variations of the PIN codes will be described.

[**0053**] First, there are several variations in the method for entering or setting up the PIN code, including (1) a method in which the user enters the PIN code at each occasion, (2) a method in which the user sets up the PIN code in advance, (3) a method in which the manufacturer or the retailer sets up the PIN code in advance (in a form that cannot be changed by the user), and (4) a method for using all or a part of the above (1) to (3) in combination (such as a method for concatenating a code of (1) and a code of (3)), for example. There is also a method in which the user is allowed to select one of the above (1) and (2) appropriately, for example.

[**0054**] There are also several variations in the content of the PIN code.

[**0055**] In the case of the above (1) or (2), there is a method in which the user determines the PIN code at each occasion. There is also a method in which a password is generated randomly at one device (the portable MPEG4 player, for example) and this password is stored in that one device side as the PIN code and presented to the user, and the user who read this password enters the same password into the other device (the portable viewer, for example). There is also a method for using the fingerprint information, the voiceprint information, or the cornea information (in which case there is a need for a device for acquiring such information which can be either provided in the portable MPEG4 player or the portable viewer, or which can be externally connectable to the portable MPEG4 player or the portable viewer).

[**0056**] Also, in the case of the above (2), there is a method in which the user attribute information is registered in the portable MPEG4 player or the portable viewer and the PIN code is generated according to this information (such as user name, address, age, school name, occupation, company name, section name, names of family members, for example). However, an information from which the PIN code is to generated must have a value that can make the PIN codes on the both devices identical, such as an identical value, for example.

[**0057**] Also, in the case of the above (3), there is a method in which the manufacturer or the retailer sets up the identical random number in one set of the portable MPEG4 player and the portable viewer at a time of manufacturing or selling. There is also a method in which the retailer acquires the user's fingerprint information or the like at a time of selling and sets it up in one set of the portable MPEG4 player and the portable viewer.

[**0058**] Now, the portable MPEG4 player and the portable viewer of this embodiment are realizing the situation in which "the AV data transfer applications will be operated properly between player and viewer that are legitimate pair" and "the AV data transfer applications will not be operated properly between player and viewer that are not legitimate pair (the AV data cannot be reproduced properly on the viewer)". For example, when the portable MPEG4 player and the portable viewer owned by the same person are the legitimate pair, it is possible to realize the environment in which data from the portable MPEG4 player owned by himself can be reproduced by the portable viewer owned by himself, but data from the portable MPEG4 player owned by himself cannot be reproduced by the portable viewer owned by someone else, and data from the portable MPEG4 player owned by someone else cannot be reproduced by the portable viewer owned by himself.

[**0059**] In other words, in the case of using radio as interface in general, the radio signals outputted from the player are naturally put in a state where they can be received by any viewer within a certain range, so that from a viewpoint of the viewer side, this implies that each portable viewer is allowed to access (command transmission of) data regardless of whether it is a portable viewer of the legitimate pair or not. Here, on the copyright protection layer, if the both devices (a transmitting side device and a receiving side device) are DTCP compliant (DTCP based) devices, the authentication and key exchange can be successfully done in either case. In other words, on the copyright protection layer whether a correspondent device is a device of the legitimate pair or not cannot be distinguished. For this reason, in this embodiment, the Bluetooth level authentication is utilized for the purpose of distinguishing whether a correspondent device is a device of the legitimate pair or not.

[**0060**] Namely, when the authentication and key exchange at the Bluetooth level is successful, it is judged that this implies a correspondent device is a device of the legitimate pair, and a transition to the authentication and key exchange at the application level (the DTCP level) is made. When the authentication and key exchange at the Bluetooth level is unsuccessful, it is judged that this implies a correspondent device is not a device of the legitimate pair, and a transition to the authentication and key exchange at the application level (the DTCP level) is refused.

[**0061**] This is because when the authentication and key exchange at the Bluetooth level is successful, it can be ascertained that the both devices (a transmitting device and a receiving device) are the devices of the legitimate pair. Namely, the authentication at the Bluetooth level is an authentication procedure using the PIN code values, which succeeds when "the same PIN code (a number in several digits or password, or fingerprint information, etc., for example) can be entered into the both devices (a transmitting device and a receiving device)" or "the same PIN code is set

up in the both devices (a transmitting device and a receiving device)", so that the success of the authentication at the Bluetooth level can be considered as sufficient for conjecturing or recognizing that the both devices are the legitimate pair (a probability in which the PIN codes entered into devices which are not the legitimate pair to coincide by accident is sufficiently small).

[**0062**] For example, in the case where the portable MPEG4 player and the portable viewer owned by the same person are to be regarded as the legitimate pair, Mr. A can enter the same PIN code (password) into his own portable MPEG4 player and portable viewer, but it is extremely difficult for Mr. B to guess and enter this same PIN code (password) into his own portable viewer, so that it is possible to judge that the portable MPEG4 player and the portable viewer are the legitimate pair owned by the same person if the entered PIN codes are identical, and that they are illegitimate pair owned by different persons if the entered PIN codes are different. Also, in the case of using the fingerprint information or the like for the PIN code, it is impossible for Mr. B to enter the same PIN code (fingerprint information or the like) as that of Mr. A into his own portable viewer unless Mr. B has stolen the fingerprint information or the like of Mr. A.

[**0063**] Here, the exemplary case of exchanges between the portable MPEG4 player **101** and the portable viewer **102** and exchanges between the portable MPEG4 player **101** and the portable viewer **103** will be described.

[**0064**] **FIG. 5** shows an exemplary sequence to be carried out between the portable MPEG4 player **101** and the portable viewer **102** of Mr. A which are the legitimate pair. Note that, in **FIG. 5**, aspects related to the encryption and decryption at the link layer are omitted as they are obvious.

[**0065**] In this case, first, the PIN code is entered by a prescribed method at a prescribed timing (in advance or before the actual use, for example) into both the portable MPEG4 player **101** and the portable viewer **102** (steps S**11** and S**12**). Here, the value of the PIN code entered at the portable MPEG4 player **101** side is assumed to be "x", and it is assumed that the same value "x" is also entered as the PIN code value at the portable viewer **102** side. As the PIN code values on both devices coincide, it is possible in this case to complete the subsequent Bluetooth layer authentication procedure successfully.

[**0066**] Then, the Bluetooth layer link key sharing procedure is carried out (step S**13**), and a value of the link key Kl to be used in the subsequent authentication and key exchange is shared (steps S**14** and S**15**).

[**0067**] Then, the Bluetooth layer authentication procedure is carried out (step S**16**). In this case, the same PIN code is shared so that the authentication is success.

[**0068**] Then, the Bluetooth layer key exchange procedure is carried out (step S**17**), and a value of the Bluetooth layer encryption key Kbt is shared (steps S**18** and S**19**).

[**0069**] As a result, it becomes possible to carry out the exchange of any data in the encrypted form (such that the others cannot eavesdrop or rewrite the data) on the Bluetooth layer between the both devices.

[**0070**] Next, the portable MPEG4 player **101** and the portable viewer **102** move on to the DTCP (copyright protection layer) authentication and key exchange phase. Here, it is preferable for the both devices to carry out a whole or a part of the DTCP authentication and key exchange procedure by applying the encryption at the Bluetooth level. In this way, it becomes possible to guarantee that the DTCP authentication and key exchange is carried out (completed) only between devices of the legitimate pair (which have successfully completed the Bluetooth level authentication and key exchange), so that it becomes possible to successfully complete the copyright protection layer (DTCP) level authentication and key exchange only between devices of the legitimate pair (which are owned by the same person, for example), and it becomes possible to share the copyright protection layer (DTCP) level encryption key only between devices of the legitimate pair (which are owned by the same person, for example).

[**0071**] Next, the portable MPEG4 player **101** and the portable viewer **102** carry out the DTCP authentication and key exchange by utilizing the Bluetooth layer level encryption (step S**20**), and the sharing of the encryption key Kc on the DTCP layer (copyright protection layer) between the both devices is realized (steps S**21** and S**22**).

[**0072**] After that, the portable MPEG4 player **101** that is a transmitting side device transmits the AV contents (MPEG4 data) to be transmitted by encrypting them by using the encryption key Kc, to the portable viewer **102** which is a receiving side device (step S**24**). The portable viewer **102** can decrypt these encrypted contents and extracts the MPEG4 data because the DTCP level encryption key Kc is already shared. Namely, the portable viewer **102** decrypts the received encrypted contents by using the DTCP level encryption key Kc (step S**25**) and displays them on a display.

[**0073**] In contrast, any other receiving device located in the same Bluetooth pico-net does not share the encryption key Kc because the DTCP level authentication and key exchange has not been carried out, and therefore it cannot reproduce the data as will be described below.

[**0074**] **FIG. 6** shows an exemplary sequence to be carried out between the portable MPEG4 player **101** of Mr. A and the portable viewer **103** of Mr. B which are not the legitimate pair.

[**0075**] First, the respective PIN codes are entered by a prescribed method at a prescribed timing (in advance or before the actual use, for example) into the portable MPEG4 player **101** and the portable viewer **103** (steps S**31** and S**32**).

[**0076**] However, in this case, if the value of the PIN code entered at the portable MPEG4 player **101** side is assumed to be "x" as described above, a probability for a value "x" of the PIN code entered at the portable viewer **103** side to coincide with the value "x" is none or extremely low. Namely, in the case where the user enters the PIN code manually, for example, it is highly unlikely to have the same PIN code entered into the both devices because these devices are devices owned by different persons. Also, in the case of registering the unique PIN code into devices of the legitimate pair in advance, the PIN codes of these devices will not coincide because the portable MPEG4 player **101** of Mr. A and the portable viewer **103** of Mr. B are assumed to be not the legitimate pair in this example.

[**0077**] Thus, even when the Bluetooth layer link key sharing procedure is carried out (step S**33**) in an attempt to

share the link key value to be used in the subsequent authentication and key exchange (steps **S34** and **S35**), the link key Kl on the portable MPEG4 player **101** side and the link key Kl' on the portable viewer **103** side that are generated according to the respective PIN codes do not coincide because the PIN codes do not coincide, and therefore the sharing of the link key will fail.

[**0078**] Consequently, even when the subsequent Bluetooth layer authentication procedure is carried out (step **S36**), this will also fail. As a result, the subsequent Bluetooth layer key exchange procedure will not be carried out.

[**0079**] Then, as the Bluetooth encryption cannot be realized, it is impossible to move on to the DTCP authentication and key exchange procedure, and therefore the DTCP authentication and key exchange cannot be completed successfully. Namely, even when the DTCP authentication and key exchange request comes from the receiving side portable viewer **103** (step **S37**), if it has been sent in a form without the Bluetooth level encryption, this request will be rejected (step **S38**). As a result, the copyright protection level authentication and key exchange fails and therefore the copyright protected AV data cannot be transferred between devices which are not the legitimate pair (which are owned by different persons, for example).

[**0080**] Note that, at a time of notifying the rejection message to the correspondent at the step **S38**, the reason for the rejection (because the encryption at the link layer, i.e., the Bluetooth layer is missing, or because the Bluetooth layer authentication has not been carried out) may be notified as well. Such a notification can urge the correspondent to carry out the Bluetooth layer authentication and key exchange if the correspondent is a legitimate one (owned by the same person, for example).

[**0081**] Note that, in the above, it is assumed that the MPEG4 data are stored in the portable MPEG4 player, but it is also possible to acquire the MPEG4 data from the external, or store the source data before the encoding and generate the MPEG4 data by an MPEG4 encoder provided therein, or acquire the source data from the external and generate the MPEG4 data therein. It is also possible to apply the present invention to exchange of data other than the MPEG4 video (MPEG4 data).

[**0082**] Note also that, in the above, it is assumed that there are one transmitting side device and one receiving side device, but it is also possible to apply the present invention to the data transfer from one transmitting device to a plurality of receiving devices. In this case, in the sequence of **FIG. 5** for example, the procedure up to the sharing of the encryption key Kc can be carried out between the portable MPEG4 player and each portable viewer separately, such that the encryption key Kc is shared by all the devices which have successfully completed the authentication and key exchange. As a result, when the portable MPEG4 player transmits the AV contents by encrypting them by using the encryption key Kc, the legitimate portable viewers which have successfully shared the encryption key Kc can decrypt the encrypted contents and display them. Note that, in this case, it is also possible to set up an upper limit for the number of receiving devices to which the data can be transferred from the transmitting device simultaneously, separately for each transmitting device or for each content.

[**0083**] Referring now to **FIG. 7** to **FIG. 9**, the second embodiment of the present invention will be described in detail.

[**0084**] The first embodiment described above is directed to the case where a whole or a part of the copyright protection layer (DTCP) authentication and key exchange procedure is carried out through the Bluetooth layer encryption and decryption units. In contrast, this second embodiment is directed to the case where the transfer of the MPEG4 data (AV data) itself is also carried out through the Bluetooth layer encryption and decryption units. In the following, the differences from the first embodiment will be mainly described.

[**0085**] **FIG. 7** shows an exemplary internal configuration of the portable MPEG4 player **101** of this embodiment which corresponds to that of **FIG. 2** in the first embodiment. Also, **FIG. 8** shows an exemplary internal configuration of the portable viewer **102** (**103**) of this embodiment which corresponds to that of **FIG. 3** in the first embodiment. In either one, a difference is that a Bluetooth layer encryption and decryption unit **15** or **25** is connected between the Bluetooth communication processing unit **12** or **22** and the DTCP encryption unit **17** or **27**.

[**0086**] Also, **FIG. 9** shows an exemplary sequence in this embodiment which corresponds to that of **FIG. 5** in the first embodiment. Note that, in **FIG. 9**, aspects related to the encryption and decryption at the link layer are omitted as they are obvious.

[**0087**] This sequence differs from that of the first embodiment in that the double encryption using the DTCP layer (copyright protection layer) encryption key Kc and the Bluetooth layer encryption key Kbt is applied to the AV data. Namely, the portable MPEG4 player **101** encrypts the copyright protected AV contents to be transmitted by using the encryption key Kc first, and then encrypts the encrypted AV contents by using the encryption key Kbt (step **S54**). Also, the portable viewer **102** decrypts the received encrypted AV contents by using the encryption key Kbt first, and then decrypts the decrypted AV contents by using the encryption key Kc (step **S54**). The other steps **S41** to **S53** and **S55** of **FIG. 9** are similar to the steps **S11** to **S23** and **S25** of **FIG. 5** described above.

[**0088**] In comparison with the first embodiment, this second embodiment requires a slower processing speed because the Bluetooth encryption is applied to both the DTCP authentication and key exchange as well as the data encryption and decryption, but the device configuration can be made simpler. For example, in the case where the DTCP processing is carried out on a single LSI, all inputs and outputs can be passed through the Bluetooth layer encryption and decryption units so that the configuration can be simplified.

[**0089**] Note that, in this second embodiment, similarly as in the first embodiment, it is highly unlikely to have the same PIN code entered into devices which are not the legitimate pair (which are owned by different persons, for example), so that the Bluetooth layer authentication procedure will fail. As a result, the subsequent Bluetooth layer key exchange procedure will not be carried out. Then, as the Bluetooth encryption cannot be realized, it is impossible to move on to the DTCP authentication and key exchange procedure, and

therefore the DTCP authentication and key exchange cannot be completed successfully. Thus, the copyright protected AV data cannot be transferred between devices which are not the legitimate pair (which are owned by different persons, for example).

[**0090**] As described, in the present invention, between a transmitting device and a receiving device, a first authentication and key exchange procedure depending on a radio link layer network is carried out, and then a whole or a part of a second authentication and key exchange procedure depending on the copyright protected contents data is carried out by using the cipher communication using a first encryption key that is shared between the transmitting device and the receiving device by the first authentication and key exchange procedure, so that the contents data transfer by the cipher communication using a second encryption key can be carried out only between legitimate pair of the transmitting device and the receiving device that can successfully complete the first authentication.

[**0091**] Thus, according to the present invention, it is possible to share the encryption key properly only between the legitimate devices which can successfully complete the authentication procedure, so that it becomes possible to realize the data transfer using the cipher communication only between devices which have properly shared the encryption key.

[**0092**] It is to be noted that the above embodiments have been described for the exemplary case of using the Bluetooth as the radio LAN, but there are many other radio LANs which have the security function such as the link layer level authentication and key exchange, encryption, etc., such as 802.11 radio LAN, WECA scheme radio LAN, Home RF scheme radio LAN, etc., and it is also possible to apply the present invention to any of these various other types of the radio LAN.

[**0093**] It is also to be noted that the portable MPEG4 player **101** and the portable viewer **102** used in the above embodiments are just examples of a transmitting device and a receiving device in general, and the display **30** in the portable viewer **102** shown in **FIG. 3** or **FIG. 8** is just an example of a unit for reproducing the contents data in general and can be replaced by any other suitable type of such a contents data reproduction unit such as audio player in the case of dealing with audio data, for example.

[**0094**] It is also to be noted that the above described embodiments according to the present invention may be conveniently implemented using a conventional general purpose digital computer programmed according to the teachings of the present specification, as will be apparent to those skilled in the computer art. Appropriate software coding can readily be prepared by skilled programmers based on the teachings of the present disclosure, as will be apparent to those skilled in the software art.

[**0095**] In particular, each one of the transmitting device and the receiving device in each of the above described embodiments can be conveniently implemented in a form of a software package.

[**0096**] Such a software package can be a computer program product which employs a storage medium including stored computer code which is used to program a computer to perform the disclosed function and process of the present invention. The storage medium may include, but is not limited to, any type of conventional floppy disks, optical disks, CD-ROMs, magneto-optical disks, ROMs, RAMs, EPROMs, EEPROMs, magnetic or optical cards, or any other suitable media for storing electronic instructions.

[**0097**] It is also to be noted that, besides those already mentioned above, many modifications and variations of the above embodiments may be made without departing from the novel and advantageous features of the present invention. Accordingly, all such modifications and variations are intended to be included within the scope of the appended claims.

What is claimed is:

1. A transmitting device for transmitting copyright protected contents data to a receiving device through radio communications, transmitting device comprising:

a first authentication unit configured to carry out a first authentication with the receiving device, for judging whether the receiving device is a device that is allowed to communicate with the transmitting device or not, on a radio link layer of the radio communications;

a first key exchange unit configured to generate a first encryption key and share the first encryption key with the receiving device when the first authentication with the receiving device by the first authentication unit is success;

a second authentication unit configured to carry out a second authentication with the receiving device, for protecting copyright of the contents data to be transmitted, through an encrypted radio communication using the first encryption key;

a second key exchange unit configured to generate a second encryption key and share the second encryption key with the receiving device when the second authentication with the receiving device by the second authentication unit is success; and

a communication unit configured to transmit the contents data to the receiving device through an encrypted communication path which is encrypted by using the second encryption key and provided on the radio link layer.

2. The transmitting device of claim 1, wherein when the second authentication or sharing of the second encryption key is failure for a reason that the encrypted radio communication on the radio link layer is missing, one of the second authentication unit and the second key exchange unit notifies the failure and the reason to the receiving device.

3. The transmitting device of claim 1, further comprising a storage unit configured to store the contents data.

4. The transmitting device of claim 1, wherein the first authentication by the first authentication unit is success when a PIN code entered at the transmitting device and a PIN code notified from the receiving device are in a prescribed relationship.

5. The transmitting device of claim 4, wherein each PIN code contains at least one of a varying code information, a prescribed code information, a body information acquired from a body of a user, and an attribute information regarding attributes of the user.

6. A transmitting device for transmitting copyright protected contents data to a receiving device through radio communications, transmitting device comprising:

a first authentication unit configured to carry out a first authentication with the receiving device, for judging whether the receiving device is a device that is allowed to communicate with the transmitting device or not, on a radio link layer of the radio communications;

a first key exchange unit configured to generate a first encryption key and share the first encryption key with the receiving device when the first authentication with the receiving device by the first authentication unit is success;

a second authentication unit configured to carry out a second authentication with the receiving device, for protecting copyright of the contents data to be transmitted, through an encrypted radio communication using the first encryption key;

a second key exchange unit configured to generate a second encryption key and share the second encryption key with the receiving device when the second authentication with the receiving device by the second authentication unit is success; and

a communication unit configured to set up an encrypted communication path which is encrypted by using the second encryption key on the encrypted radio communication which is encrypted by using the first encryption key, and transmit the contents data to the receiving device through the encrypted communication path.

7. The transmitting device of claim 6, wherein when the second authentication or sharing of the second encryption key is failure for a reason that the encrypted radio communication on the radio link layer is missing, one of the second authentication unit and the second key exchange unit notifies the failure and the reason to the receiving device.

8. The transmitting device of claim 6, further comprising a storage unit configured to store the contents data.

9. The transmitting device of claim 6, wherein the first authentication by the first authentication unit is success when a PIN code entered at the transmitting device and a PIN code notified from the receiving device are in a prescribed relationship.

10. The transmitting device of claim 9, wherein each PIN code contains at least one of a varying code information, a prescribed code information, a body information acquired from a body of a user, and an attribute information regarding attributes of the user.

11. A receiving device for receiving copyright protected contents data transmitted from a transmitting device through radio communications, the receiving device comprising:

a first authentication unit configured to carry out a first authentication with the transmitting device, for enabling the receiving device to operate as a device that is allowed to communicate with the transmitting device, on a radio link layer of the radio communications;

a first key exchange unit configured to generate a first encryption key and share the first encryption key with the transmitting device when the first authentication with the transmitting device by the first authentication unit is success;

a second authentication unit configured to carry out a second authentication with the transmitting device, for protecting copyright of the contents data to be transmitted, through an encrypted radio communication using the first encryption key;

a second key exchange unit configured to generate a second encryption key and share the second encryption key with the transmitting device when the second authentication with the transmitting device by the second authentication unit is success; and

a communication unit configured to receive the contents data transmitted from the transmitting device through an encrypted communication path which is encrypted by using the second encryption key and provided on the radio link layer.

12. The receiving device of claim 11, further comprising a reproduction unit configured to reproduce the contents data.

13. The receiving device of claim 11, wherein the first authentication by the first authentication unit is success when a PIN code entered at the receiving device and a PIN code notified from the transmitting device are in a prescribed relationship.

14. The receiving device of claim 13, wherein each PIN code contains at least one of a varying code information, a prescribed code information, a body information acquired from a body of a user, and an attribute information regarding attributes of the user.

15. A receiving device for receiving copyright protected contents data transmitted from a transmitting device through radio communications, the receiving device comprising:

a first authentication unit configured to carry out a first authentication with the transmitting device, for enabling the receiving device to operate as a device that is allowed to communicate with the transmitting device, on a radio link layer of the radio communications;

a first key exchange unit configured to generate a first encryption key and share the first encryption key with the transmitting device when the first authentication with the transmitting device by the first authentication unit is success;

a second authentication unit configured to carry out a second authentication with the transmitting device, for protecting copyright of the contents data to be transmitted, through an encrypted radio communication using the first encryption key;

a second key exchange unit configured to generate a second encryption key and share the second encryption key with the transmitting device when the second authentication with the transmitting device by the second authentication unit is success; and

a communication unit configured to set up an encrypted communication path which is encrypted by using the second encryption key on the encrypted radio communication which is encrypted by using the first encryption key, and receive the contents data transmitted from the transmitting device through the encrypted communication path.

16. The receiving device of claim 15, further comprising a reproduction unit configured to reproduce the contents data.

17. The receiving device of claim 15, wherein the first authentication by the first authentication unit is success when a PIN code entered at the receiving device and a PIN code notified from the transmitting device are in a prescribed relationship.

18. The receiving device of claim 17, wherein each PIN code contains at least one of a varying code information, a prescribed code information, a body information acquired from a body of a user, and an attribute information regarding attributes of the user.

19. A radio communication system, comprising a transmitting device for transmitting copyright protected contents data through radio communications, and a receiving device for receiving the contents data transmitted from the transmitting device, each one of the transmitting device and the receiving device having:

a first authentication unit configured to carry out a first authentication between the transmitting device and the receiving device, for judging whether the transmitting device and the receiving device are devices that are allowed to communicate with the transmitting device or not, on a radio link layer of the radio communications;

a first key exchange unit configured to generate a first encryption key and share the first encryption key between the transmitting device and the receiving device when the first authentication between the transmitting device and the receiving device by the first authentication unit is success;

a second authentication unit configured to carry out a second authentication between the transmitting device and the receiving device, for protecting copyright of the contents data to be transmitted, through an encrypted radio communication using the first encryption key;

a second key exchange unit configured to generate a second encryption key and share the second encryption key between the transmitting device and the receiving device when the second authentication between the transmitting device and the receiving device by the second authentication unit is success; and

a communication unit configured to transfer the contents data from the transmitting device to the receiving device through an encrypted communication path which is encrypted by using the second encryption key and provided on the radio link layer.

20. A radio communication system, comprising a transmitting device for transmitting copyright protected contents data through radio communications, and a receiving device for receiving the contents data transmitted from the transmitting device, each one of the transmitting device and the receiving device having:

a first authentication unit configured to carry out a first authentication between the transmitting device and the receiving device, for judging whether the transmitting device and the receiving device are devices that are allowed to communicate with the transmitting device or not, on a radio link layer of the radio communications;

a first key exchange unit configured to generate a first encryption key and share the first encryption key between the transmitting device and the receiving device when the first authentication between the transmitting device and the receiving device by the first authentication unit is success;

a second authentication unit configured to carry out a second authentication between the transmitting device and the receiving device, for protecting copyright of the contents data to be transmitted, through an encrypted radio communication using the first encryption key;

a second key exchange unit configured to generate a second encryption key and share the second encryption key between the transmitting device and the receiving device when the second authentication between the transmitting device and the receiving device by the second authentication unit is success; and

a communication unit configured to set up an encrypted communication path which is encrypted by using the second encryption key on the encrypted radio communication which is encrypted by using the first encryption key, and transfer the contents data from the transmitting device to the receiving device through the encrypted communication path.

21. A contents data transfer method in a radio communication system comprising a transmitting device for transmitting copyright protected contents data through radio communications and a receiving device for receiving the contents data transmitted from the transmitting device, the contents data transfer method comprising:

carrying out a first authentication between the transmitting device and the receiving device, for judging whether the transmitting device and the receiving device are devices that are allowed to communicate with the transmitting device or not, on a radio link layer of the radio communications;

generating a first encryption key and sharing the first encryption key between the transmitting device and the receiving device when the first authentication between the transmitting device and the receiving device is success;

carrying out a second authentication between the transmitting device and the receiving device, for protecting copyright of the contents data to be transmitted, through an encrypted radio communication using the first encryption key;

generating a second encryption key and sharing the second encryption key between the transmitting device and the receiving device when the second authentication between the transmitting device and the receiving device is success; and

transferring the contents data from the transmitting device to the receiving device through an encrypted communication path which is encrypted by using the second encryption key and provided on the radio link layer.

22. A contents data transfer method in a radio communication system comprising a transmitting device for transmitting copyright protected contents data through radio communications and a receiving device for receiving the contents data transmitted from the transmitting device, the contents data transfer method comprising:

carrying out a first authentication between the transmitting device and the receiving device, for judging whether the transmitting device and the receiving device are devices that are allowed to communicate with the transmitting device or not, on a radio link layer of the radio communications;

generating a first encryption key and sharing the first encryption key between the transmitting device and the receiving device when the first authentication between the transmitting device and the receiving device is success;

carrying out a second authentication between the transmitting device and the receiving device, for protecting copyright of the contents data to be transmitted, through an encrypted radio communication using the first encryption key;

generating a second encryption key and sharing the second encryption key between the transmitting device and the receiving device when the second authentication between the transmitting device and the receiving device is success; and

setting up an encrypted communication path which is encrypted by using the second encryption key on the encrypted radio communication which is encrypted by using the first encryption key, and transferring the contents data from the transmitting device to the receiving device through the encrypted communication path.

* * * * *