IN THE UNITED STATES DISTRICT COURT
FOR THE MIDDLE DISTRICT OF FLORIDA
ORLANDO DIVISION

PARKERVISION, INC., Plaintiff, v. QUALCOMM INCORPORATED, QUALCOMM ATHEROS, INC., Defendants.	CASE NO.: 6:14-CV-00687-PGB-LRH

PARKERVISION, INC.'S RESPONSE TO QUALCOMM'S MOTION FOR SUMMARY JUDGMENT OF NONINFRINGEMENT AND INVALIDITY

TABLE OF CONTENTS

I. INTRODUCTION 1

II. LEGAL STANDARDS 2

III. ARGUMENT 2

A. Response Regarding the Receiver Patents and Receiver Claims 2

1. Collateral Estoppel Still Does Not Apply 2

2. Qualcomm is Not Entitled to Summary Judgment Under § 112 7

3. The Accused Receiver Products Infringe 10

B. Response Regarding The Asserted Transmitter Patents And Claims 11

1. The Harmonically Rich Signal 11

2. The Summing Elements of the '372 Patent 16

3. "Reference Potential" of Claim 107 of the '372 Patent 17

C. Qualcomm's Assertions of No Willfulness or Induced Infringement 18

IV. Conclusion 20

TABLE OF AUTHORITIES

Page(s)

Cases

AFG Industries, Inc. v. Cardinal IG Company, Inc.,
375 F.3d 1367 (Fed. Cir. 2004) 16

Akamai Tech., Inc. v. Limelight Networks, Inc.
805 F.3d 1368 (Fed. Cir. 2015) 15

Apple, Inc. v. Samsung Electronics Co.,
No. 12–cv–00630–LHK, 2014 WL 252045 (N.D. Cal. Jan. 21, 2014) 15, 18

Comair Rotron, Inc. v. Nippon Sensan Corp.,
49 F.3d 1535 (Fed. Cir. 1995) 2

Fuji Photo Film Co. v. Jazz Photo Corp.,
394 F.3d 1368 (Fed. Cir. 2005) 19

Halo Electronics, Inc. v. Pulse Electronics, Inc.,
136 S.Ct. 1923 (2016) 18, 20

Home Diagnostics, Inc. v. LifeScan, Inc.,
381 F.3d 1352 (Fed. Cir. 2004) 18

Jolly v. Hoegh Autoliners Shipping AS,
No. 3:20-cv-1150-J-34PDB, 2020 WL 6505037 (Nov. 5, 2020) 17

Kingsland v. City of Miami,
382 F.3d 1220 (11th Cir. 2004) 2

Markman v. Westview Instruments, Inc.,
52 F.3d 967 (Fed. Cir. 1995) 6

Matsushita Elec. Indus. Co., Ltd. v. Zenith Radio Corp.,
475 U.S. 574 (1986) 2

Microsoft Corp. v. i4i Limited Partnership,
564 U.S. 91 (2011) 7

Ohio Willow Wood v. Alps S.,
735 F.3d 1333 (Fed. Cir. 2013) 3

Omega Patents, LLC v. Calamp Corp.,
No: 6:13-cv-1950-Orl-40DAB, 2015 WL 12830497 (M.D. Fla. Dec. 23, 2015) 13

ParkerVision v. Qualcomm,
621 F. App'x 1009 (Fed. Cir. 2015) 3

Phillips v. AWH Corp.,
415 F.3d 1303 (Fed. Cir. 2005) 9, 10

Synqor, Inc. v. Artesyn Techs., Inc.,
709 F.3d 1365 (Fed. Cir. 2013) 20

Warsaw Orthopedic, Inc. v. NuVasive, Inc.,
824 F.3d 1344 (Fed. Cir. 2016) 18

WCM Industries, Inc. v. IPS Corp.,
721 F. App'x 959 (Fed. Cir. 2018) 20

Other Authorities

Fed. R. Civ. P. 56(a) 2

Local Rule 3.01(a) 17

TABLE OF EXHIBITS

Exhibit Number	Short Cite	Descriptions
1	PV RX Rpt.	Opening Expert Report of Dr. P. Allen
2	PV RX Rbtl. Rpt.	Rebuttal Expert Report of Dr. P. Allen
3	Steer Depo.	Excerpts of the deposition transcript of M. Steer (Jan. 28, 2021)
4	Razavi, *RF Microelectronics*	Behzad Razavi, RF Microelectronics (1998)
5	LCU: GSM RX HB LLDR	C. Narathong, Low Level Design Review (LLDR) for LCU's High Band (HB) GSM Receiver Path (Sep. 27, 2007)
6	Razavi Rpt.	Opening Expert Report of Dr. Behzad Razavi
7	Razavi Depo. I	Excerpts of the deposition transcript of B. Razavi (Dec. 9, 2020)
8	Couch, *Modern Communication Systems*	Leon W. Couch, "Modern Communication Systems" (1995)
9	Razavi 2016 Paper	B. Razavi et al., "On the Stability of Charge-Pump Phase-Locked Loops," IEEE Transactions on Circuits and Systems, 63(6):741-750 (2016)
10	PV TX Rpt.	Opening Expert Report of Dr. Michael Steer
11	Steer App. C	Appendix C to Opening Expert Report of Dr. Michael Steer
12	PV TX Rbtl. Rpt.	Rebuttal Expert Report of Dr. Michael Steer
13	Razavi 2018 Paper	Behzad Razavi, "The Harmonic-Rejection Mixer," IEEE Solid-State Circuits Magazine, 10(4):10-14 (2018)
14	Ranjan Depo.	Excerpts of the deposition transcript of M. Ranjan (Aug. 21, 2020)
15	Panikkath Depo.	Excerpts of the deposition transcript of V. Panikkath (Sep. 3, 2020)
16	Razavi Depo. II	Excerpts of the deposition transcript of B. Razavi (Dec. 10, 2020)
17	Gudem Depo.	Excerpts of the deposition transcript of P. Gudem (Aug. 12, 2020)
18	'940 Patent	U.S. Patent No. 6,091,940
19	'372 Patent	U.S. Patent No. 7,039,372
20	P. Kantak Email	[redacted]

	Chain	[redacted], produced as QCPV001416119
21	Wheatley Depo.	Excerpts of the deposition transcript of C. Wheatley (Jan. 23, 2020)
22	S. Bazarjani Email Chain	[redacted], produced as QCPV001547362
23	'940 Patent Awarded	[redacted], produced as QCPV001390546
24	D. Schrock Email	[redacted], produced as QCPV005526982

I. INTRODUCTION[1]

As to the Receiver Patents, Qualcomm rehashes issues related to the scope and interpretation of the claims at issue in this case, largely repackaging arguments that it made in its previous summary judgment motion, which this Court denied. *See* Dkt. 348. As was the case when the Court resolved this issue months ago, unlike *ParkerVision I,* the Receiver Claims still do not include a "generating" limitation and collateral estoppel still does not preclude ParkerVision's infringement allegations.

As to the Transmitter Patents, Qualcomm is not entitled to summary judgment on the "harmonic" claim terms because ParkerVision's expert opines that [redacted]. Similarly, and as to "summing," [redacted]. Finally, and as to "reference potential," Qualcomm proffers a new claim construction that is belated and is divorced from any intrinsic source of meaning.

As to Qualcomm's intent to induce infringement, and its willful infringement, rarely has there been a case so replete with evidence of an infringer's intent. As the record establishes: [redacted]." This, and more, is evidence of Qualcomm's intent to infringe sufficient to defeat its motion for summary judgment.

[1] Qualcomm has not received permission to file additional motions. ParkerVision believes that Qualcomm's Motion should be stricken. *See* Dkt. 485 (ParkerVision's Opposition to Qualcomm's Motion for Leave to file excess motions for Summary Judgment); Local Rule 3.01(a); Dkt. 309.

II. LEGAL STANDARDS

"The court shall grant summary judgment if the movant shows that there is no genuine dispute as to any material fact and the movant is entitled to judgment as a matter of law." Fed. R. Civ. P. 56(a). The Court must "view the evidence and all factual inferences therefrom in the light most favorable to the non-moving party, and resolve all reasonable doubts about the facts in favor of the non-movant." *Kingsland v. City of Miami*, 382 F.3d 1220, 1225 (11th Cir. 2004). Summary judgment should only be granted "[w]here the record taken as a whole could not lead a rational trier of fact to find for the non-moving party." *Matsushita Elec. Indus. Co., Ltd. v. Zenith Radio Corp.*, 475 U.S. 574, 587 (1986).

III. ARGUMENT

A. Response Regarding the Receiver Patents and Receiver Claims

1. Collateral Estoppel Still Does Not Apply

This case is not "*ParkerVision I*," and the Receiver Claims[2] are different than those from *ParkerVision I*. "[S]eparate patents describe separate and distinct inventions, and it cannot be presumed that related patents rise and fall together." *Comair Rotron, Inc. v. Nippon Sensan Corp.*, 49 F.3d 1535, 1539 (Fed. Cir. 1995) (brackets and internal quotations omitted) (citing 35 U.S.C. § 121 and 37 C.F.R. § 1.141). As was true when the Court last decided this very issue: the parties continue to offer competing expert testimony on whether the Receiver Claims have the "generating" limitation that was at issue in *ParkerVision I*. *See* Dkt. 348 at 18.

ParkerVision I involved claims with the limitation that a baseband or lower frequency signal "is ***generated*** from the transferred energy [to an energy storage

[2] "Receiver Claims" refers to claims 1-3, 5, 7, 10, 11, and 14 of the '177 Patent, claims 1 and 10 of the '907 Patent, and claims 24 and 331 of the '940 Patent.

device]." *ParkerVision v. Qualcomm*, 621 F. App'x 1009, 1012 (Fed. Cir. 2015) (emphasis added). The dispositive issue in *ParkerVision I*—at least according to the Federal Circuit—was whether a baseband current existed at any point prior to the capacitors downstream of the mixer core. *Id.* at 1013; *see also id.* at 1016 (Finding "[t]hat a baseband current already exists before the current from the carrier signal reaches the capacitors shows that the baseband signal is not generated in the way ParkerVision asserts.").

Whether collateral estoppel applies rests on whether ***the same issue*** is presented ***in this case.*** *Ohio Willow Wood v. Alps S.*, 735 F.3d 1333, 1342 (Fed. Cir. 2013) ("[I]t is the identity of the *issues* that were litigated that determines whether collateral estoppel should apply.") (emphasis in original). Collateral estoppel does not apply because ***in this case,*** the Receiver Claims ***still*** do not require that baseband current be created in the first instance by energy stored in an energy storage device. *See, e.g.*, Ex. 1 (PV RX Rpt.) at ¶¶ 39-47, 543-550; Ex. 2 (PV RX Rbtl Rpt.) at ¶¶ 73-74; *see also* Dkt. 348 at 18-19 (Court citing *Ohio Williow Wood* and holding that Qualcomm "failed to carry its burden" on showing "there is no material difference between the patents-at-issue in *ParkerVision I* and the claims now asserted by ParkerVision.").[3]

Notwithstanding that this Court has already resolved this exact issue in this case—Qualcomm argues that, unlike the last time the Court decided this issue, there is now no dispute about whether the Receiver Claims have the "generating" limitation. Mot. at 4-5. Qualcomm asserts that: (1) ParkerVision's expert did not

[3] The Court also held that Qualcomm failed to meet its burden to prove "there is no material difference between the accused products in *ParkerVision I* and the accused products at issue now." Dkt. 348 at 18-19. Qualcomm does not even attempt to meet its burden, instead asserting that ParkerVision contends the Accused Products operate similarly. Mot. at 7-8. ***ParkerVision welcomes Qualcomm's stipulation that there are no material difference among the Accused Products.*** *But see* Dkt. 2-3 (Court denying ParkerVision's request for a representative products agreement).

opine on the differences between the *ParkerVision I* claims and this case, and (2) ParkerVision's expert allegedly "agreed" that the Receiver Claims have the "generating" limitation. *See id*. Qualcomm is incorrect on both counts.

***First*,** ParkerVision's expert's job is to examine the language of the claims at issue in this case as construed by the Court—there was no duty to examine unrelated claims from other patents not at issue here (particularly where, as was the case here, the Court resolved this issue *before* the experts' served their reports). Nonetheless, ParkerVision's experts' *did* dispute Qualcomm's expert's interpretation of the claims—particularly his attempts to draw parallels between the claims at issue here and those from *ParkerVision I*. *See, e.g.*, Ex. 1 (PV RX Rpt.) at ¶¶ 39-47, 542-550 (rebutting Qualcomm's arguments that the Accused Products "do not meet the 'producing' or 'form[ing]' limitations"); Ex. 2 (PV RX Rbtl Rpt.) at ¶¶ 73-74.

Qualcomm portrays the Receiver Claims as covering processes that are incompatible with the down conversion that occurs [redacted]. Mot. at 4-5. But, and as the Receiver Report explains, [redacted]" Ex. 1 (PV RX Rpt.) at ¶ 44; *id. at* ¶ 543 ("To reiterate, one skilled in the art knows that a down converted signal contains the baseband signal and other non-wanted signals.").

As ParkerVision's expert explains, the Receiver Claims are not incompatible with basic frequency down conversion. "When the mixer switch is closed, the current containing down converted information will flow to the load" and also

energy storage elements. Ex.1 (PV RX Rpt.) at ¶ 44. "When the switch is open, this switch-closed, stored, down converted current signal stored on the energy storage elements goes to the load." *Id.* at ¶ 46. This process—[redacted]—"produc[es] a downconverted signal [containing the baseband] with enhanced signal-to-noise power ratio" in accordance with the '177 Patent. This sampling process also "forms a down-converted signal," again containing the baseband, in accordance with the '907 Patent.[4] The Court's prior order denying Qualcomm's previous motion also summarizes this process for both the '177 and '907 Patents. *See* Dkt. 348 at 17-18. This sampling process is illustrated with a figure from ParkerVision's Receiver Report and described in greater detail in Section III.A.3 below.

According to Qualcomm's interpretation of the Receiver Claims, energy in the energy storage device and the load at the "Switch Closed" time cannot exist.[5] Mot. at 5. But, as the Receiver Report explains, "over many samples" the samples provided to the load "recreate the original signal modulated on the RF carrier. If one looks at the process from the frequency domain, the concept of energy sampling is more difficult to see and is best understood in the time domain particularly for a single LO period." Ex. 1 (PV RX Rpt.) at ¶ 545. ParkerVision's Receiver Report provides a figure depicting the relevant functionality of the Receiver Claims—which shows that, in contrast to Qualcomm's expert's assertions—the energy in the energy storage device and the load at the "Switch Closed" time can (and in fact does) exist

[4] The '907 Patent requires "periodically coupling" a carrier signal to an energy storage device and a load. *See, e.g.*, '907 Patent at Claim 1. The '940 Patent has a similar requirement. '940 Patent at Claim 24.

[5] The "Switch Closed" and "Switch Open" times are illustrated in Section III.A.3 below.

as part of the sampling process that practices the Receiver Claims. pr. Ex. 1 (PV RX Rpt.) at ¶ 44. In denying Qualcomm's prior motion, the Court summarized ParkerVision's contentions and the expert opinions in support thereof—opinions that remain unchanged. *See* Dkt. 348 at 17-19.

Second, ParkerVision's experts did not admit "that the Receiver Claims have the same requirements as the 'generating limitation'" from *ParkerVision I* as Qualcomm contends. Mot. at 6-7. As a threshold, and as a matter of law, it is the words of the claims themselves, as construed by the Court, that set forth their meaning. *Markman v. Westview Instruments, Inc.*, 52 F.3d 967, 976 (Fed. Cir. 1995). Here, there can be no dispute: the word "generate" appears nowhere in the asserted Receiver Claims or the Court's constructions thereof. What Qualcomm has done is take a line from the Federal Circuit decision in *ParkerVision I* out of context,[6] ask ParkerVision's experts whether that singular line—which does not appear in the claims or the Court's construction—is part of the Receiver Claims in this case, and then argue on this basis that there is no dispute regarding claim scope. Mot. at 7. Instead, and as ParkerVision has always contended, [redacted] *See, e.g.*, Ex. 3 (Steer Depo.) at 97:19-98:25; Dkt. 348 at 17-19 (Court summarizing the declaration of ParkerVision's expert); Ex. 1 (PV RX Rpt.) at ¶¶ 39-47, 542-550 (expert report providing opinions consistent with the declaration cited in the Court's prior Order).

[6] Qualcomm asked ParkerVision's experts whether "produce a low frequency baseband signal using energy that has been transferred from the carrier signal into a storage medium" is "part" of the Receiver Claims. Mot. at 7.

2. Qualcomm is Not Entitled to Summary Judgment Under § 112

In a footnote, Qualcomm presents a two sentence argument that it is entitled to summary judgment under § 112 as to the '907 Patent. Mot. at 5-6, n. 4. Qualcomm does not explain the grounds for its requested relief.

As to the '177 Patent, Qualcomm argues that three aspects of the Court's Construction of "matched filtering/correlating module" are indefinite such that the claims—which are presumed valid—are nonetheless invalid under § 112: (1) "a downconverted signal with enhanced signal-to-noise power ratio;" (2) "linear time-variant circuitry;" and (3) "non-negligible aperture." None are indefinite, and Qualcomm cannot meet its burden to prove invalidity by clear and convincing evidence.[7] *Microsoft Corp. v. i4i Limited Partnership*, 564 U.S. 91, 95 (2011).

First, the Court's construction requires "producing a downconverted signal with enhanced signal-to-noise power ratio." Dkt. 381 at 24. Signal-to-noise power ratio ("SNR") is a common measurement in the field.[8] Qualcomm argues that the '177 Patent provides no way to measure whether SNR is "enhanced." Mot. at 10. But a person of ordinary skill in the art could easily compare SNR values to determine whether SNR was "enhanced," as explained by the '177 Patent. *See, e.g.*, '177 Patent at 149:21-152:11 ("Signal-to-Noise Ratio Comparison of the Various Embodiments") (providing equations in order to compare SNR values for "matched filter"). Qualcomm ignores this discussion and instead hones in on the '177 Patent's statement that "[t]his embodiment of the present invention produces enhanced (***and***

[7] Qualcomm previously asserted that this claim was subject to construction under § 112. *See* Dkt. 381 at 11-13; n. 8 (Noting that "[t]he Court is not persuaded that § 112 ¶ 6 applies."). But, and importantly, Qualcomm *did not* assert invalidity under § 112 as part of claim construction.

[8] SNR is defined in Dr. Razavi's textbook. Ex. 4 (Razavi, *RF Microelectronics*) at 39; *see also* Ex. 5 (LCU: GSM RX HB LLDR) at 5.

in some cases the best possible) signal-to-noise ration (SNR)[.]" Mot. at 10 (emphasis added). Qualcomm argues that "best possible" is not an objective standard and thus the '177 Patent "does not provide an objective standard for determining whether a signal is 'enhanced.'" *Id*. But this is a conflation fallacy. The Court's construction does not require "best possible;" the construction requires "enhanced" SNR.

Second, the Court's construction requires "linear time-variant circuitry." Dkt. 381 at 24. Like SNR, linear time-variant circuitry ("LTV" circuitry) is a common description in the field. Qualcomm's expert, Dr. Razavi explains that one of ordinary skill would have understood that switches are LTV circuitry: "Section 2.1 of my textbook shows in detail how a switch operates as a linear, time-variant system." Ex. 6 (Razavi Rpt.) at ¶ 227; *see also* Ex. 1 (PV RX Rpt) at ¶ 602 ("A circuit containing switches and linear components would be a linear time-variant circuit.").[9] Dr. Razavi teaches that switches are LTV devices despite being fully aware that—in real-life RF circuit design—"there are no switches that are *completely linear*." Ex. 7 (Razavi Depo. I) at 53:7-14 (emphasis added). Dr. Razavi also cites to Figure 5-10 of the Couch textbook, which describes a "linear time-varying device used as a mixer." Ex. 8 (Couch, *Modern Communication Systems*) at 261. Again—and despite arguing that the Court's construction is indefinite—Qualcomm's position is that the LTV device in Figure 5-10 of Couch "provides a simple, readily available option for a mixer." Ex. 6 (Razavi Rpt.) at ¶ 259.

[9] Qualcomm's expert, Dr. Razavi—who signed a declaration supporting Qualcomm's Motion—describes "linear time-variant" and "LTV" consistent with ordinary usage in both his textbooks and peer-reviewed published papers. *See, e.g.*, Ex. 4 (Razavi, *RF Microelectronics*) at 12, 181; Ex. 9 *On the Stability of Charge-Pump Phase-Locked Loops*, B. Razavi et al., (June 2016), at 1 (using the acronym "LTV" for "linear time-variant").

Qualcomm seeks to have it both ways. When it comes to Qualcomm's validity case, it asserts that those of ordinary skill recognize the commonplace meaning of LTV devices to include ordinary switches, as described in both the Razavi and Couch textbooks. Ex. 6 (Razavi Rpt.) at ¶¶ 227, 260. Yet when it comes to arguing against the Court's construction of "matched filtering/correlating module," Qualcomm and its expert apply a definition of LTV circuitry that is inconsistent with the ordinary use of that term as a "basic concept in RF design." Ex. 4 (Razavi, *RF Microelectronics*) at 12 (describing a "linear time-variant system" in the chapter "Basic Concepts in RF Design"), 181 (noting that "***most downconversion mixers of interest***" are "***linear, time-variant system[s]*** with respect to the RF Port") (emphasis added).

Third, and despite never previously asking for such a construction, Qualcomm requests that the Court construe the term "non-negligible aperture" from the Court's Construction of "matched filtering/correlating module" to require "an approximate half cycle of the received carrier signal" or otherwise "hold the claims indefinite." Mot. 11-12. Qualcomm does not explain why the claims should be held indefinite if the Court does not re-construct its prior construction of this term. *Id.*

In any event, Qualcomm's argument to further narrow the Court's construction comes down to the notion that—because the Court's claim construction references passages of the '177 Patent describing an embodiment of the claims with "an approximate half cycle of the received carrier signal"—"non-negligible aperture" can only be "an approximate half cycle of the received carrier signal" and nothing else. Mot. at 10-11. This is incorrect. As the Federal Circuit stated in *Phillips*, "although the specification often describes very specific embodiments of the invention, we have repeatedly warned against confining the claims to those

embodiments." *Phillips v. AWH Corp.*, 415 F.3d 1303, 1323 (Fed. Cir. 2005) (citations omitted). Other than pointing out that the Court's construction references particular embodiments of the '177 Patent, Qualcomm provides no reason for the Court to revisit its construction or otherwise hold that the phrasing of its construction is indefinite.

3. The Accused Receiver Products Infringe

Qualcomm also argues that it is entitled to summary judgment of noninfringement because there is "no genuine dispute that ***the*** [redacted]." Mot. at 9 (emphasis added). This is incorrect. As ParkerVision's replacement expert explained during his deposition, what [redacted] Ex. 3 (1/28/2021 Steer Dep.) at 90:7-17. ParkerVision's replacement expert further explained the Receiver Claims are directed to a different signal that is formed in the load. *Id.* at 90:19-91:17; 99:2-16 (describing "the baseband signal that's in the claims" as one that "appears across the load for that entire structure").

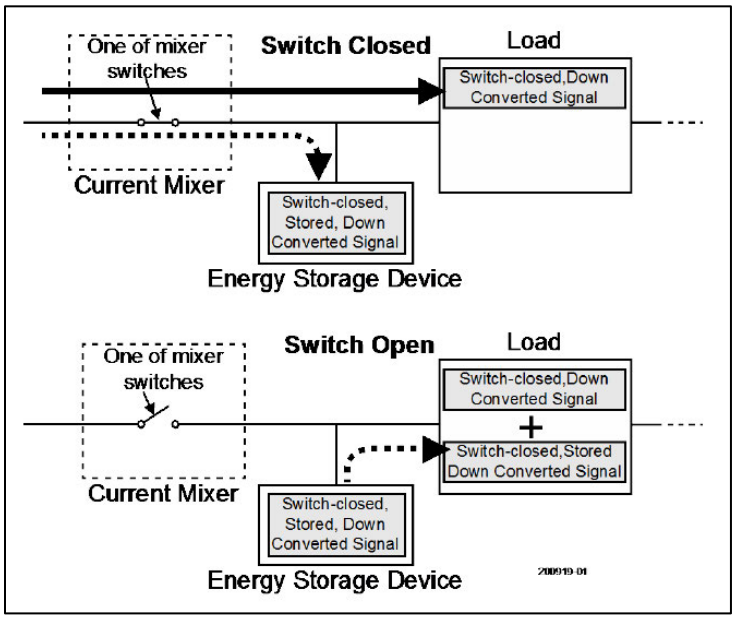

As shown in the figure above from paragraph 44 of the Receiver Report, and as explained by ParkerVision's expert, Qualcomm's argument incorrectly ignores the time domain and assumes one static "baseband signal." *See, e.g.*, Ex. 1 (PV RX Rpt.) at ¶¶ 39-47 (including "Figure VI.A-3- Illustration of the forming of the down-converted signal using an energy storage element"), ¶¶ 542-550. Qualcomm's argument "obfuscates" what happens [redacted]. *Id.* at ¶ 546. [redacted] *See, e.g.*, *Id.* at ¶ 44; 39-47, 542-550. [redacted] *Id.* at ¶ 46. [redacted]. *See, e.g.*, *Id.* at ¶¶ 39-47, 542-550. As explained in ParkerVision's Receiver Report, [redacted]. *Id.* at ¶ 548.

B. Response Regarding The Asserted Transmitter Patents And Claims

Qualcomm seeks summary judgment on the Transmitter Claims[10] as to: (1) "harmonically rich signal," (2) "summing/combining limitations," and (3) "reference potential." Mot. at 12, 21-22. Summary judgment should be denied.

1. The Harmonically Rich Signal

Qualcomm argues that it is entitled of summary judgment of non-infringement because the Accused Transmitters do not create the harmonics required by the Transmitter Claims. Mot. at 12. Summary judgment should be denied because

[10] "Transmitter Claims" refers to claims 24-26, 331, and 368-369 of the '940 Patent and claims 99-100, 107, and 126 of the '372 Patent.

ParkerVision's expert, Dr. Steer, opines that the Accused Transmitters practice every element of the Transmitter Claims—including those directed to "harmonics" under the Court's construction—and points to credible evidence supporting his opinions.

After analyzing schematics for every Accused Transmitter and reviewing testimony from Qualcomm's engineers, Dr. Steer opined that [redacted]. *See* Ex. 10 (PV TX Rpt.) at ¶¶ 146-47, 157-61, 169-71, 219-20. [redacted] Dr. Steer excerpted the following figure from a paper published in 2018 by Qualcomm's expert:

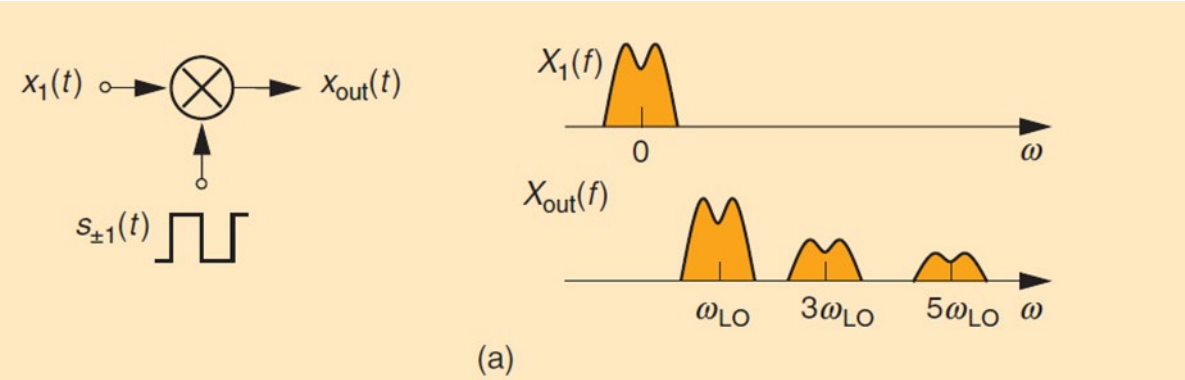

Ex. 13 (Razavi 2018 Paper) at 11. [redacted] Mot. at 13.

As illustrated above, an information signal[11] (*i.e.,* the orange signal labeled "$X_1(f)$") centered about 0 Hz is applied to upconverters in [redacted]. Ex. 10 (PV TX Rpt.) at ¶ 147. At the output of the upconverters, the information

[11] The Transmitter Patents define "baseband signal" as "[a]ny generic information signal desired for transmission and/or reception. Ex. 18 ('940 Patent) at 7:41-43. "Baseband signal" and "information signal" can be used interchangeably to refer to the signal $X_1(f)$.

signal is translated from 0 Hz to odd integer multiples[12] of the frequency of the local oscillator ("LO"). *Id.*; *see also* Ex. 13 (Razavi 2018 Paper) at 10-11 ("[T]he spectrum also appears at $3\omega_{LO}$, $5\omega_{LO}$, and so on."). This yields an upconverted signal with information centered about a first integer multiple of the LO frequency (*i.e.*, "ω_{LO}"), a third integer multiple of the LO frequency (*i.e.*, "$3\omega_{LO}$"), a fifth integer multiple of the LO frequency (*i.e.*, "$5\omega_{LO}$"), and so on. Ex. 10 (PV TX Rpt.) at ¶ 147; Ex. 12 (PV TX Rbtl. Rpt.) at ¶¶ 200-03; Ex. 14 (Ranjan Depo.) at 86:23-88:21; Ex. 15 (Panikkath Depo. Tr.) at 71:13-17. The signal is a "harmonically rich signal" under the Court's claim construction because it includes multiple "frequenc[ies] or tone[s] that, when compared to [their] fundamental or reference frequency or tone, [are] an integer multiple of it." Dkt. 381 at 9-10.

ParkerVision disputes both statements in Qualcomm's "statement of key facts as to which there is no genuine dispute" because neither statement accurately reflects ParkerVision's allegations. Mot. at 12-13. Absent inaccurate statements regarding "ParkerVision's allegat[ions]" and the nature of the "accused signal[s]," Qualcomm does not allege facts supporting its motion. *Id.* For this reason alone, summary judgment should be denied. *Omega Patents, LLC v. Calamp Corp.*, No: 6:13-cv-1950-Orl-40DAB, 2015 WL 12830497, at *2 (M.D. Fla. Dec. 23, 2015) ("The moving party bears the initial burden of identifying those portions of the record demonstrating a lack of genuine dispute of material fact.").

Qualcomm next argues that [redacted]

[redacted] harmonics are created when a square waveform is used to drive the upconverters. Ex. 18 ('940 Patent) at 41:9-15 ("There are some harmonics for which the amplitude is zero. In the case of a square wave, for example, the 'null points' are the even harmonics."); *see also id.* at 41:25-28.

[redacted]," Mot. at 15, but that is not true. [redacted]. *See, e.g.*, Ex. 14 (Ranjan Depo.) at 86:6-88:21; Ex. 16 (Razavi Depo. II) at 201:2-202:12. Skilled artisans know that information centered about integer multiples of the LO frequency is part of the harmonically rich signal. Ex. 18 ('940 Patent) at 62:62-63:7; *see also* Ex. 13 (Razavi 2018 Paper) at 10-11 ("[T]he spectrum also appears **at** $3\omega_{LO}$, $5\omega_{LO}$, and so on.") (emphasis added).

Qualcomm also argues that [redacted] Mot. at 14, 16. [redacted] Dkt. 381 at 10. [redacted]." Mot. at 16. [redacted] Ex. 10 (PV TX Rpt.) at ¶ 147; *see also* Ex. 17 (Gudem Depo.) at 251:18-252:13 ([redacted]

Finally, Qualcomm asserts that "ParkerVision's theory conflicts with the claim construction," but it fails to identify the alleged conflict. *See* Mot. at 13. Rather, Qualcomm devotes the bulk of its argument to advocating for a new claim construction. Mot. at 16-19; *see also id*. at 20 ("If summary judgment is denied, a clarifying construction is required . . ."). Qualcomm's attempt to frame the parties' dispute as an issue requiring belated claim construction misses the mark because the parties stipulated to the construction of "harmonic" and "harmonically rich signal." *See* Dkt. 341 at 1, 6; Dkt. 381 at 9-10. For these claim terms, the stipulated constructions are binding on both Qualcomm and ParkerVision. *See Akamai Tech., Inc. v. Limelight Networks, Inc*. 805 F.3d 1368, 1376 (Fed. Cir. 2015) (where "the parties *agreed* in [a] stipulation as to both the meaning and the scope of the term during claim construction," finding defendant bound by the "meaning [that] was agreed-upon *with no further limitations*") (emphasis in original). Because Qualcomm cannot renege on the parties' stipulated constructions, there is no reason for the Court to revisit claim construction. *Id*.; *see also Apple, Inc. v. Samsung Electronics Co.*, No. 12–cv–00630–LHK, 2014 WL 252045, at *4 (N.D. Cal. Jan. 21, 2014) ("The Federal Circuit has held that it can be error to engage in hypertechnical refinements of the meaning of claims following claim construction to support a grant of summary judgment.") (citation omitted).

For the same reasons, Qualcomm also cannot complain that "Dr. Steer's construction of harmonic" is deficient, Mot. at 20, because Dr. Steer applied the construction set forth in the Court's Markman Order and to which Qualcomm stipulated. Dkt. 381 at 10 (adopting constructions to which the parties stipulated in Dkt. 341); Ex. 10 (PV Tx. Rpt.) at ¶¶ 146-47; Ex. 12 (PV TX Rbtl. Rpt.) at ¶¶ 200-02.

Although it may disagree with Dr. Steer's conclusions, Qualcomm does not dispute that Dr. Steer applied the stipulated construction of "harmonic" in his infringement analysis. Mot. at 18-20.

At bottom, ParkerVision contends that the Accused Transmitters create the claimed "harmonically rich signal" under the stipulated constructions of both "harmonic" and "harmonically rich signal" and Qualcomm disagrees. This is a genuine dispute of material fact that precludes summary judgment.

2. The Summing Elements of the '372 Patent

Qualcomm argues that "there is no evidence that the Accused Products sum in the required order." Mot. at 21. Qualcomm is wrong. ParkerVision has identified credible evidence that the Accused Transmitters practice every element of the asserted claims of the '372 Patent, including the "summing" elements challenged by Qualcomm. *See, e.g.*, Ex. 10 (PV TX Rpt.) at ¶¶ 219-222 (identifying the "first summer"), *id.* at ¶¶ 245-248 (identifying the "second summer"), *id.* at ¶¶ 249-254 (identifying the "summing means"); *see also* Ex. 12 (PV TX Rbtl. Rpt.) at ¶¶ 237-238. In particular, [redacted] *See generally* Ex. 11 (Steer App. C) ([redacted]). Because ParkerVision has proffered evidence that supports a finding of infringement, there is a dispute of material fact that precludes summary judgment as to "summing." *AFG Industries, Inc. v. Cardinal IG Company, Inc.*, 375 F.3d 1367, 1371 (Fed. Cir. 2004).

Ignoring ParkerVision's evidence, Qualcomm argues that "Dr. Steer's opinions are fundamentally flawed" and that "ParkerVision has a failure of proof as

the summing/combining limitations." Mot. at 21. Qualcomm does not explain the bases for these arguments and points only to its "Daubert motion" for support. *Id.* at 21. This is not enough to meet Qualcomm's initial burden as the party moving for summary judgment and it violates Local Rule 3.01(a) because motions for summary judgment are limited to "a single document no longer than twenty-five pages inclusive of all parts." L.R. 3.01(a); *see also Jolly v. Hoegh Autoliners Shipping AS*, No. 3:20-cv-1150-J-34PDB, 2020 WL 6505037, at *1 (Nov. 5, 2020).

Qualcomm additionally asserts that summary judgment is appropriate for a subset of the Accused Transmitters because "Dr. Razavi's opinions regarding these products is [sic] undisputed by any reliable evidence." Mot. at 22. Again, this is simply not true because ParkerVision *does dispute* Dr. Razavi's opinions and does so by citing Qualcomm's own (reliable) schematics and internal design reviews. *See, e.g.*, Ex. 10 (PV TX Rpt.) at ¶¶ 249-254; Ex. 11 (Steer App. C).

3. "Reference Potential" of Claim 107 of the '372 Patent

In its third Motion for Summary Judgment concerning the Transmitter Claims, Qualcomm asks the Court to grant summary judgment of non-infringement as to claim 107 of the '372 Patent. Mot. at 22-23. To start, Qualcomm again points to its "Daubert motion," arguing that "summary judgment is warranted, because ParkerVision cannot rely on a new theory not disclosed in its infringement contentions." Mot. at 22. This is improper and should be rejected. *See* L.R. 3.01(a); *Jolly*, 2020 WL 6505037, at *1.

Second, Qualcomm proffers a new claim construction for "reference potential" and argues that the Transmitter Products do not infringe under its newly proposed construction. Mot. at 23-24. The Court should reject Qualcomm's belated

attempt to re-open claim construction via a motion for summary judgment. *See Apple*, 2014 WL 252045, at *3 (observing that courts are not "obligated to rule on claim construction arguments presented for the first time in summary judgment briefs") (citing *Function Media, L.L.C. v. Google Inc.*, 708 F.3d 1310, 1325 (Fed.Cir. 2013)).[13]

C. Qualcomm's Assertions of No Willfulness or Induced Infringement

Qualcomm asserts that ParkerVision has adduced no evidence that Qualcomm possessed "the requisite specific intent to infringe." Mot. at 24. The intent prong for willful infringement is that "the risk of infringement was either known or so obvious that it should have been known to the accused infringer." *Halo Electronics, Inc. v. Pulse Electronics, Inc.*, 136 S.Ct. 1923, 1930 (2016) (internal citations omitted). The intent prong for induced infringement is that Qualcomm knew or was willfully blind to the fact that the induced acts were infringing. *Warsaw Orthopedic, Inc. v. NuVasive, Inc.*, 824 F.3d 1344, 1347 (Fed. Cir. 2016) (citing *Commil USA, LLC v. Cisco Sys.*, 135 S. Ct. 1920, 1927-28 (2015)).

Contrary to Qualcomm's allegations in its Motion—and [redacted] Qualcomm undoubtedly knew the induced acts cause infringement, or it was willfully blind; and Qualcomm plainly know of the risk of infringement, or

[13] Even if the Court considers Qualcomm's untimely construction of "reference potential," summary judgment is still not appropriate because Qualcomm's proposed interpretation is divorced from the claim language. Qualcomm argues that the claimed "'reference potential' refers to a fixed voltage" that cannot "var[y] over time." Mot. at 23. Here, and in violation of normal principles of claim construction, Qualcomm attempts to read the word "fixed" into Claim 107, which, on its face, does not require a "fixed" voltage. Ex. 19 ('372 Patent) at Claim 107 (claiming, in relevant part, the step of "gating a first input signal using a first reference potential . . . thereby creating a first gated information signal."); *Home Diagnostics, Inc. v. LifeScan, Inc.*, 381 F.3d 1352, 1358 (Fed. Cir. 2004) ("Absent a clear disavowal or contrary definition in the specification or the prosecution history, the patentee is entitled to the full scope of its claim language.").

should have known. *See* Ex. 1 (PV RX Rpt.) at ¶¶ 122-190, 214-232; Ex. 10 (PV TX Rpt.) at ¶¶ 151-152. To summarize a few examples of evidence establishing Qualcomm's intent to infringe: [redacted]. Ex. 10 (PV RX Rpt.) at ¶¶ 122-190; *see, e.g.*, Ex. 20 (P. Kantak Email Chain) at 1 [redacted] (emphasis in original). [redacted]. *See Fuji Photo Film Co. v. Jazz Photo Corp.*, 394 F.3d 1368, 1378 (Fed. Cir. 2005). Second, as early as 1999, Qualcomm's Senior Vice President for Technology, Charles Wheatley, concluded: [redacted]" Ex. 21 (Wheatley Depo.) at 168:24-170:25, 173:18-174:8. [redacted] Third, [redacted]k." Ex. 22 (S. Bazarjani Email Chain) at 1; *see also* Ex. 24 (D. Schrock Email) at 1. Fourth, although this case has been pending since 2014, [redacted]

[redacted]. Ex. 1 (PV RX Rpt.) at ¶¶ 568-571.

That ParkerVision did not [redacted]—and Qualcomm cites no authority in support of its novel argument. Mot. at 24-25. Likewise, a 2013 jury verdict of no willfulness in *ParkerVision I* as to different ParkerVision patents, and a 2016 non-infringement argument from the Office of Unfair Import Investigations of the ITC (but not even an on opinion of the Commission itself) regarding a different ParkerVision patent, in no way negates Qualcomm's intent to infringe the patents at issue ***in this case*** beginning in 2006. *See Halo*, 136 S.Ct. at 1933 ("culpability is generally measured against the knowledge of the actor at the time of the challenged conduct").[14]

IV. CONCLUSION

Qualcomm's "scattershot" motions for summary judgment raising multiple discrete issues should be denied.

[14] Qualcomm's Motion does not appear to dispute that Qualcomm had knowledge of the patents in suit during the period of alleged infringement, nor could it. *See* Ex. 1 (PV RX Rpt.) at ¶¶ 202-205; Ex. 10 (PV TX Rpt.) at 328-329. And the evidence shows that Qualcomm was monitoring the technology and products created by ParkerVision, and thus knew or should have known of the Patents-in-Suit. *See* Ex. 23 (PV Press Release); *WCM Industries, Inc. v. IPS Corp.*, 721 F. App'x 959, 971 (Fed. Cir. 2018); *Synqor, Inc. v. Artesyn Techs., Inc.*, 709 F.3d 1365, 1380 (Fed. Cir. 2013).

March 2, 2021

Respectfully submitted,

McKOOL SMITH, P.C.
By: */s/ Joshua W. Budwin*
Douglas A. Cawley
Texas State Bar No. 04035500
dcawley@mckoolsmith.com
Richard A. Kamprath
Texas State Bar No. 24078767
rkamprath@mckoolsmith.com
300 Crescent Court, Suite 1500
Dallas, Texas 75201
Telephone: (214) 978-4000
Facsimile: (214) 978-4044

Joshua W. Budwin
Texas State Bar No. 24050347
jbudwin@mckoolsmith.com
Leah Buratti
Texas State Bar No. 24064897
lburatti@mckoolsmith.com
300 West Sixth Street, Suite 1700
Austin, Texas 78701
Telephone: (512) 692-8700
Facsimile: (512) 692-8744

CALDWELL CASSADY & CURRY
Kevin L. Burgess
Texas State Bar No. 24006927
2121 N. Pearl Street, Suite 1200
Dallas, Texas 75201
Telephone: (214) 888-4848
Facsimile: (212) 888-4849
kburgess@caldwellcc.com

SMITH HULSEY & BUSEY
Stephen D. Busey
Florida Bar Number 117790
John R. Thomas
Florida Bar Number 77107

One Independent Dr., Suite 3300
Jacksonville, Florida 32202
Telephone: (904) 359-7700
Facsimile: (904) 359-7708
busey@smithhulsey.com
jthomas@smithhulsey.com

ATTORNEYS FOR PLAINTIFF PARKERVISION, INC.

CERTIFICATE OF SERVICE

I hereby certify that a true and correct copy of the above and forgoing document has been served on all counsel of record via the Court's ECF system on March 2, 2021.

/s/ Josh Budwin
Josh Budwin