Claim Chart For Infringement of U.S. Patent No. 9,118,528 by TI Chips

Claim 1	TI Chips
A system for frequency down-converting a modulated carrier signal to a baseband signal, comprising:	TI directly infringes (literally and/or under the doctrine of equivalents) the ’528 patent by making, using, selling, offering for sale, and/or importing in/into the United States products covered by at least claims 1-5, 8, 9, 11-23, 26, 27, and 29-36 of the ’528 patent. TI products that infringe claims 1-5, 8, 9, 11-23, 26, 27, and 29-36 of the ’528 patent include TI wireless chips (e.g., cellular, Wi-Fi and/or Bluetooth chips) including, without limitation, the AFE76XX series, AFE77XX series, AFE79XX series, AFE80XX series transceivers, and any other TI chip (collectively, “TI Chips”) that is capable of down-converting a modulated carrier signal to a baseband signal as claimed in the ’528 patent. On information and belief, each TI Chip includes at least one or more switches/transistors that sample a carrier signal, one or more capacitors that store non-negligible amounts of energy from a carrier signal, and one or more resistors providing a low impedance load(s). On information and belief, the structure, function, and operation of TI Chips are substantially similar to one another with respect to the claims at issue. On information and belief, the TI Chips are described, in part, in the IEEE paper entitled “A Fully Integrated 2×2 b/g and 1×2 a-Band MIMO WLAN SoC in 45nm CMOS for Multi-Radio IC,” by R. Kumar et al., *2013 IEEE International Solid-State Circuits Conference Digest of Technical Papers*, San Francisco, CA, USA, 2013, pp. 328-329 (hereinafter referred to as the 2013 IEEE paper). On information and belief, each TI Chip is/includes a system for frequency down-converting a modulated carrier signal (e.g., high frequency RF signal) to a baseband signal. For example, the AFE76XX “is a family of high performance, quad/dual channel, 14-bit, integrated RF sampling analog front ends (AFEs) with 9 GSPS DACs and 3 GSPS ADCs, capable of synthesizing and digitizing wideband signals.”[1] Accordingly, each TI Chip is configured to receive a modulated carrier signal (e.g., high frequency RF signal). In order to process such a signal, each TI Chip must necessarily down-convert the modulated carrier signal to a baseband signal.

[1] https://www.ti.com/lit/ds/symlink/afe7686.pdf?ts=1701875653400&ref_url=https%253A%252F%252Fwww.ti.com%252Fproduct%252FAFE7686; *see also, e.g.*, https://www.ti.com/lit/ds/symlink/afe8004.pdf?ts=1701875867735&ref_url=https%253A%252F%252Fwww.google.com%252F; https://www.ti.com/lit/ds/symlink/afe7799.pdf?ts=1701875830461&ref_url=https%253A%252F%252Fwww.ti.com%252Fproduct%252FAFE7799; https://www.ti.com/lit/ds/symlink/afe7920.pdf?ts=1701876119308&ref_url=https%253A%252F%252Fwww.google.com%252F.

1

TI 1012

a first switch coupled to a first control signal which comprises a sampling aperture with a specified frequency, wherein the first switch is on and a portion of energy that is distinguishable from noise is transferred from the modulated carrier signal as an output of said first switch during the sampling aperture of the first control signal;	Each TI Chip includes a first switch (e.g., switch S1, shown in the purple box) coupled to a first control signal (e.g., LO_I+, represented by LO_I in the orange box) which comprises a sampling aperture with a specified frequency, wherein the first switch is on and a portion of energy that is distinguishable from noise is transferred from the modulated carrier signal (e.g., RF signal, represented by the red path) as an output of the first switch during the sampling aperture of the first control signal. 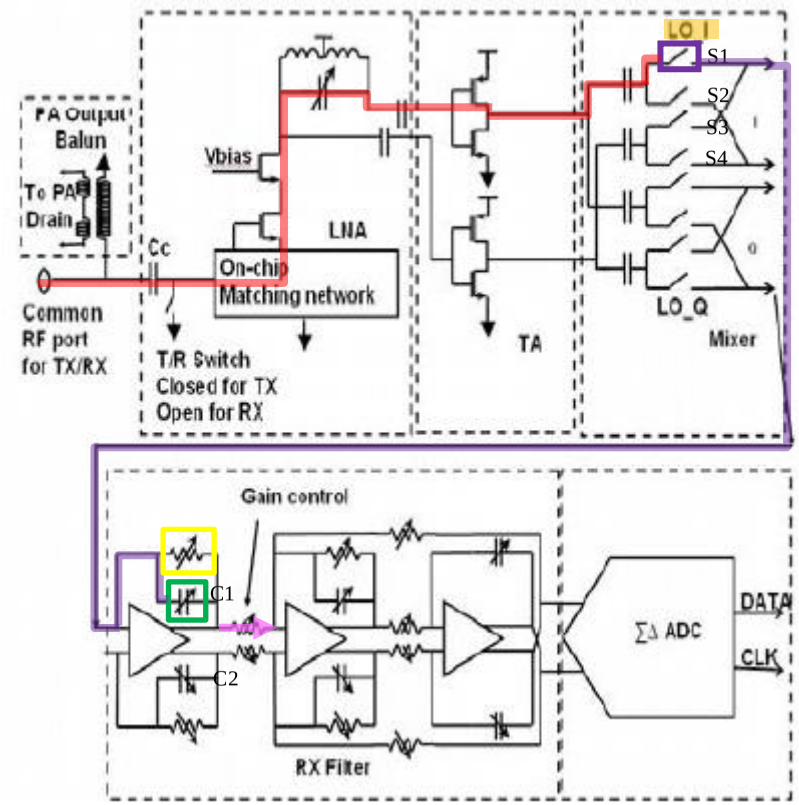 Figure 19.1.4 of 2013 IEEE paper.

	Switch S1 (purple box) includes transistors that operate as a switch with switching frequency and duty cycles controlled by LO_I+ (orange box). In particular, switch S1 (purple box) periodically opens and closes, thereby controlling the current flow of RF (red path) in the circuit. The time period for which switch S1 (purple box) is open/closed is determined by LO_I+ (orange box). Specifically, LO_I+ (orange box) enables (i.e., closes) switch S1 (purple box) during an aperture thereof. An aperture describes the pulse width of the control signal (i.e., the length of activation within the signal) when the switch is closed. The diagram below represents an exemplary waveform of control signal LO_I+. 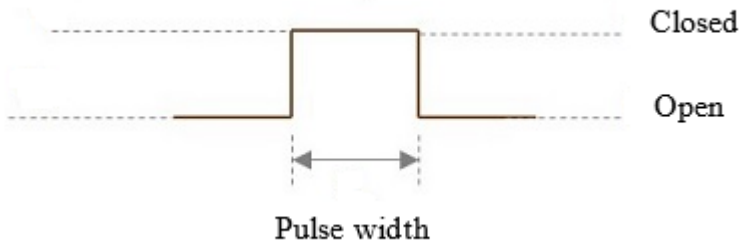 When switch S1 (purple box) is ON (closed), current can pass through the switch S1; when the switch is OFF (opened), current is blocked from passing through the switch. The switch S1 is turned ON (closed) by sending control signal LO_I+ to the switch at an independent control input. The switch is kept ON (kept closed) for the duration of the signal pulse (i.e., during a sampling aperture of the pulse). On information and belief, the pulses of control signal LO_I+ have a non-negligible, periodic aperture (e.g., nominal 25% duty cycle). *See* N. Klemmer et al., "A 45nm CMOS RF-to-Bits LTE/WCDMA FDD/TDD 2×2 MIMO Base-Station Transceiver SoC with 200MHz RF Bandwidth," in *IEEE Int. Solid-State Circuits Conf. (ISSCC) Dig. Tech. Papers*, 2016, pp. 164-165; N. Klemmer (2016, February 2). *A 45nm CMOS RF-to-Bits LTE/WCDMA FDD/TDD 2×2 MIMO Base Station Transceiver SoC with 200MHz RF Bandwidth* [PowerPoint]. ISSCC, San Francisco, CA, USA; C. Yeh et al., "Multi-band, Multi-mode, Low-power CMOS Receiver Front-end for Sub-GHz ISM/SRD Band with Narrow Channel Spacing," *Proceedings of the IEEE 2012 Custom Integrated Circuits Conference*, San Jose, CA, USA, 2012, pp. 1-4. As such, switch S1 (purple box) is closed during an aperture of LO_I+ (orange box) and remains open between apertures of LO_I+. During an aperture of LO_I+ (orange box), energy from RF (red path) that is distinguishable from noise is transferred across the switch to an output of switch S1 (purple box).

3

a first energy storage element that stores the transferred energy from the modulated carrier signal and outputs a down-converted in-phase baseband signal portion of said modulated carrier signal;	Each TI Chip includes a first energy storage element (e.g., capacitor C1, shown in the green box) that stores the transferred energy from the modulated carrier signal (e.g., RF, represented by the red path) and outputs a down-converted in-phase baseband signal portion (e.g., represented by the pink arrow) of the modulated carrier signal. 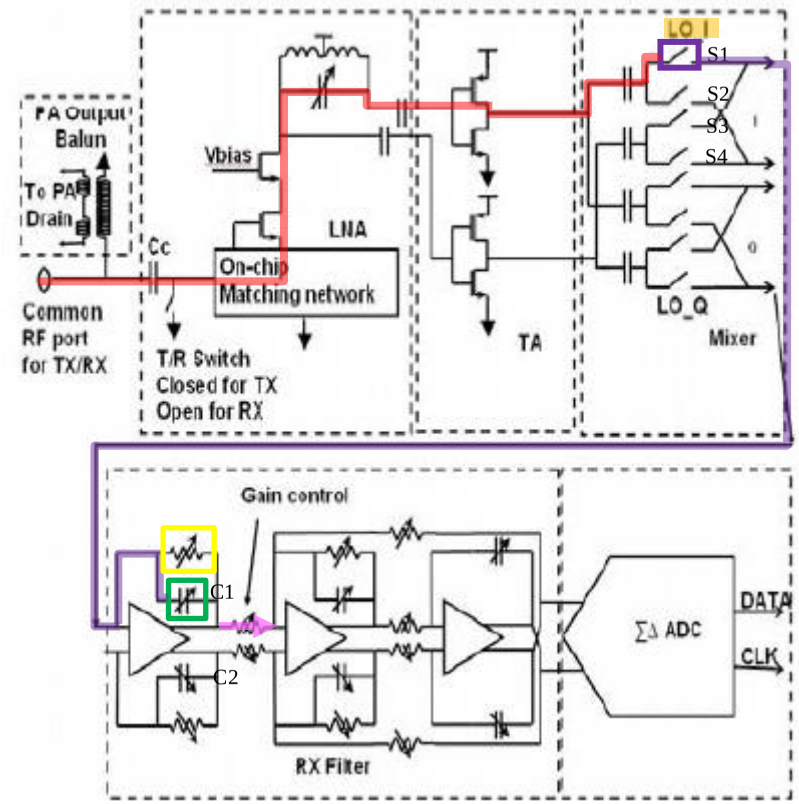 Figure 19.1.4 of 2013 IEEE paper.

4

	As explained above, control signal LO_I+ (orange box) enables (i.e., closes) switch S1 (purple box) during an aperture thereof. Successive pulses of LO_I+ (orange box) therefore recursively close/open switch S1 (purple box). The recursive closing/opening of switch S1 (purple box) periodically couples the input signal RF (red path) to capacitor C1 (green box). During an aperture of LO_I+ (orange box), for example, switch S1 (purple box) closes and energy from RF (red path) is directed to capacitor C1 (green box) along the purple path. Between apertures of LO_I+ (orange box), switch S1 (purple box) remains open, preventing the flow of energy through the switch and consequently discharging energy stored in capacitor C1 (green box) to load circuitry (e.g., feedback resistor(s), yellow box). Accordingly, capacitor C1 (green box) discharges stored energy, thereby outputting a down-converted in-phase baseband signal portion (pink arrow) of the modulated carrier signal. Each TI Chip meets wireless telecommunication standards. *See, e.g.*, 2013 IEEE paper (discussing IEEE 802.11a, 802.11b, 802.11g, and 802.11n Wi-Fi standards); "AFE79xx Quad-Channel RF Transceiver with Feedback Path," TEXAS INSTRUMENTS, https://www.ti.com/lit/ds/symlink/afe7920.pdf?ts=1701878816296&ref_url=https%253A%252F%252Fwww.google.com%252F (discussing 3G/4G/5G cellular standards).

5

Stored Energy

The power delivered to a circuit element is the product of the current and the voltage (provided that the references have the passive configuration):

$$p(t) = v(t)i(t) \tag{3.9}$$

Using Equation 3.3 to substitute for the current, we have

$$p(t) = Cv\frac{dv}{dt} \tag{3.10}$$

Suppose we have a capacitor that initially has $v(t_0) = 0$. Then the initial stored electrical energy is zero, and we say that the capacitor is uncharged. Furthermore, suppose that between time t_0 and some later time t the voltage changes from 0 to $v(t)$ volts. As the voltage magnitude increases, energy is delivered to the capacitor, where it is stored in the electric field between the plates.

If we integrate the power delivered from t_0 to t, we find the energy delivered:

$$w(t) = \int_{t_0}^{t} p(t)\,dt \tag{3.11}$$

Using Equation 3.10 to substitute for power, we find that

$$w(t) = \int_{t_0}^{t} Cv\frac{dv}{dt}\,dt \tag{3.12}$$

Canceling differential time and changing the limits to the corresponding voltages, we have

$$w(t) = \int_{0}^{v(t)} Cv\,dv \tag{3.13}$$

Integrating and evaluating, we get

$$w(t) = \frac{1}{2}Cv^2(t) \tag{3.14}$$

This represents energy stored in the capacitance that can be returned to the circuit.

See Hambley, *Electrical Engineering Principles and Applications*, 6th Ed., Prentice Hall, 2014, p. 129 -130.

7	Alternatively, in addition to, or instead of the load circuitry shown above, the load includes the load circuitry shown in the brown box below. 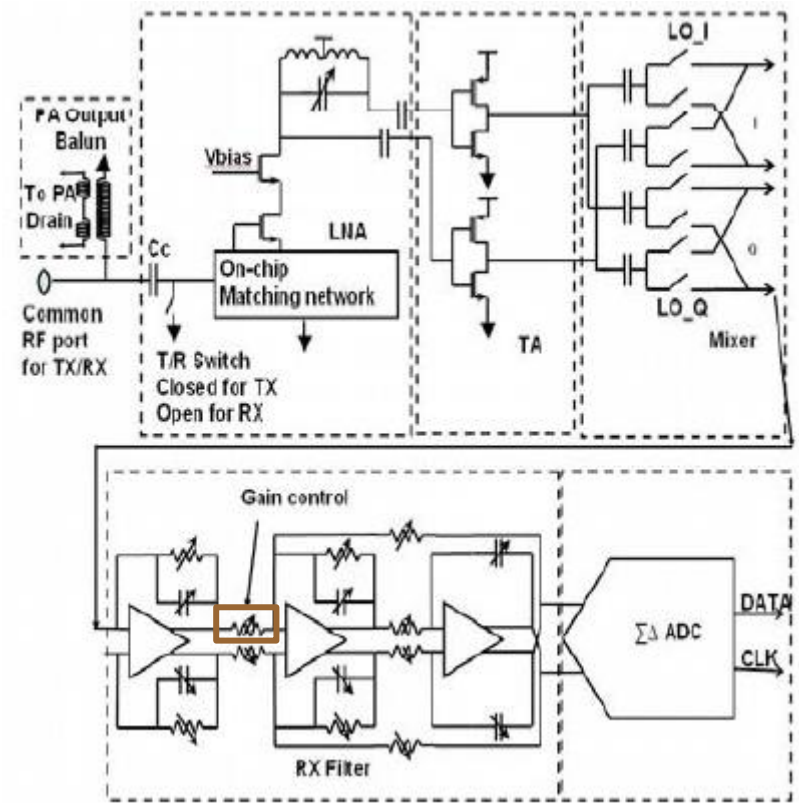 Figure 19.1.4 of 2013 IEEE paper.

a second switch coupled to a second control signal which comprises a sampling aperture with a specified frequency, wherein the second switch is on and a portion of energy that is distinguishable from noise is transferred from the modulated carrier signal as an output of said second switch during the sampling aperture of the second control signal;	Each TI Chip includes a second switch (e.g., switch S2, shown in the purple box) coupled to a second control signal (e.g., LO_I-, represented by LO_I in the orange box) which comprises a sampling aperture with a specified frequency, wherein the second switch is on and a portion of energy that is distinguishable from noise is transferred from the modulated carrier signal (e.g., RF, represented by the red path) as an output of the second switch during the sampling aperture of the second control signal. 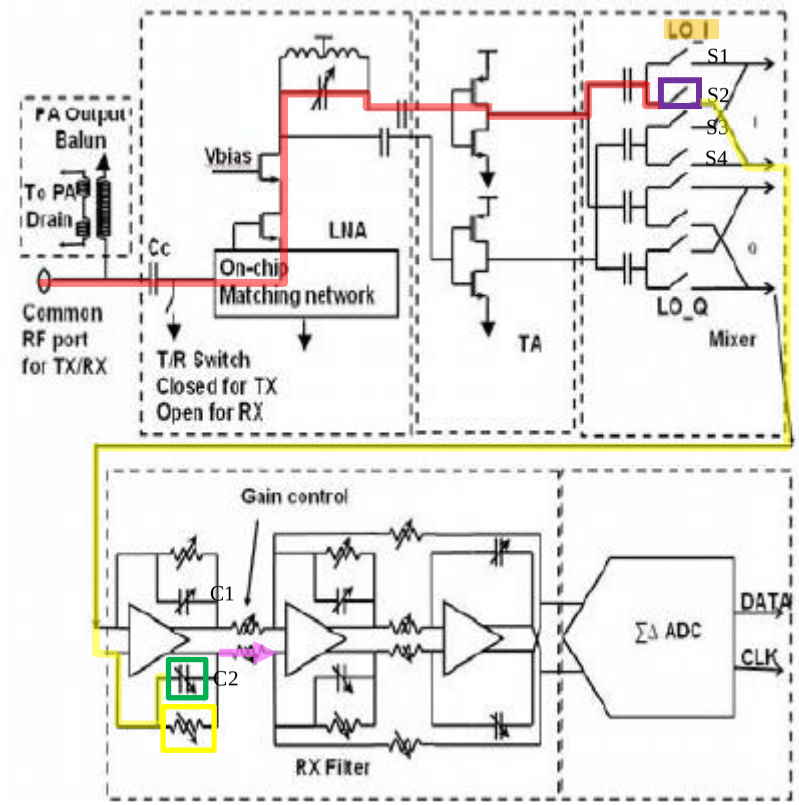 Figure 19.1.4 of 2013 IEEE paper.

	Switch S2 (purple box) includes transistors that operate as a switch with switching frequency and duty cycles controlled by LO_I- (orange box). In particular, switch S2 (purple box) periodically opens and closes, thereby controlling the current flow of RF (red path) in the circuit. The time period for which switch S2 (purple box) is open/closed is determined by control signal LO_I- (orange box). Specifically, control signal LO_I- (orange box) enables (i.e., closes) switch S2 (purple box) during an aperture thereof. An aperture describes the pulse width of the control signal (i.e., the length of activation within the signal) when the switch is closed. The diagram below represents an exemplary waveform of control signal LO_I-. 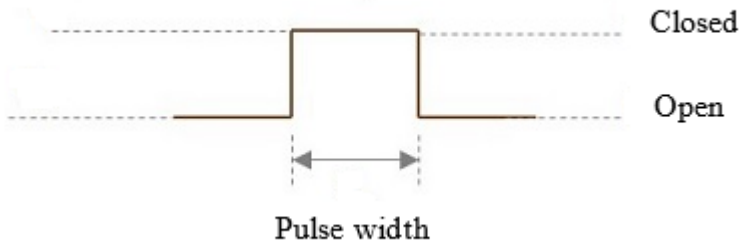 When switch S2 (purple box) is ON (closed), current can pass through the switch S2; when the switch is OFF (opened), current is blocked from passing through the switch. The switch S2 is turned ON (closed) by sending control signal LO_I- to the switch at an independent control input. The switch is kept ON (kept closed) for the duration of the signal pulse (i.e., during a sampling aperture of the pulse). On information and belief, the pulses of control signal LO_I- have a non-negligible, periodic aperture (e.g., nominal 25% duty cycle). *See* N. Klemmer et al., "A 45nm CMOS RF-to-Bits LTE/WCDMA FDD/TDD 2×2 MIMO Base-Station Transceiver SoC with 200MHz RF Bandwidth," in *IEEE Int. Solid-State Circuits Conf. (ISSCC) Dig. Tech. Papers*, 2016, pp. 164-165; N. Klemmer (2016, February 2). *A 45nm CMOS RF-to-Bits LTE/WCDMA FDD/TDD 2×2 MIMO Base Station Transceiver SoC with 200MHz RF Bandwidth* [PowerPoint]. ISSCC, San Francisco, CA, USA; C. Yeh et al., "Multi-band, Multi-mode, Low-power CMOS Receiver Front-end for Sub-GHz ISM/SRD Band with Narrow Channel Spacing," *Proceedings of the IEEE 2012 Custom Integrated Circuits Conference*, San Jose, CA, USA, 2012, pp. 1-4. As such, switch S2 (purple box) is closed during an aperture of LO_I- (orange box) and remains open between apertures of LO_I-. During an aperture of LO_I- (orange box), energy from RF (red path) that is distinguishable from noise is transferred across the switch to an output of switch S2 (purple box).

a second energy storage element that stores the transferred energy from the modulated carrier signal and outputs a down-converted inverted in-phase baseband signal portion of said modulated carrier signal;	Each TI Chip includes a second energy storage element (e.g., capacitor C2, shown in the green box) that stores the transferred energy from the modulated carrier signal (e.g., RF, represented by the red path) and outputs a down-converted inverted in-phase baseband signal portion (e.g., represented by the pink arrow) of the modulated carrier signal. 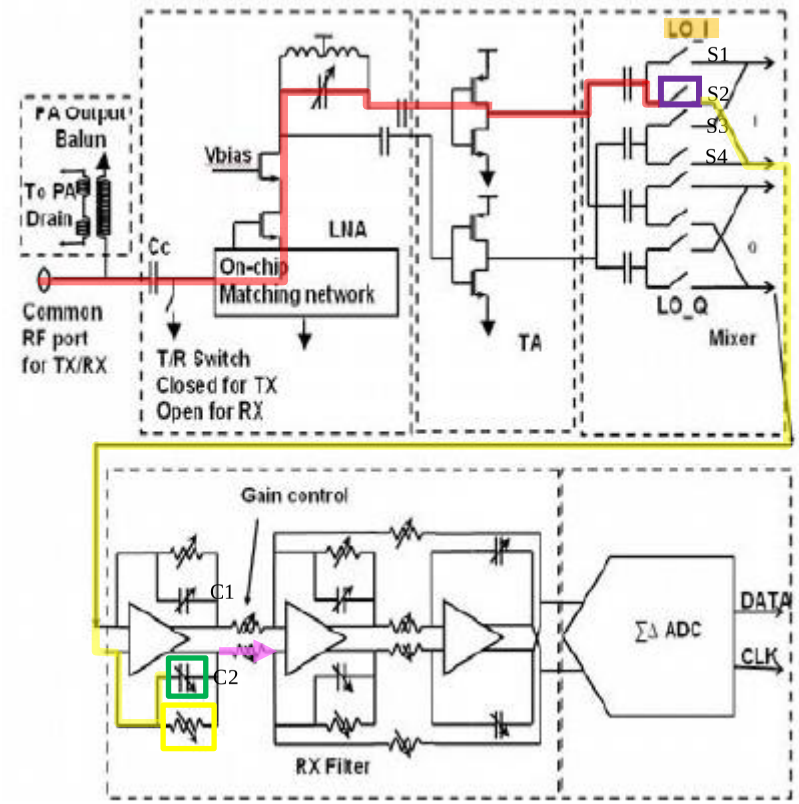 Figure 19.1.4 of 2013 IEEE paper.

10

	As explained above, control signal LO_I- (orange box) enables (i.e., closes) switch S2 during an aperture thereof. Successive pulses of LO_I- (orange box) therefore recursively close/open switch S2 (purple box). The recursive closing/opening of switch S2 (purple box) periodically couples the input signal RF (red path) to the capacitor C2 (green box). During an aperture of LO_I- (orange box), for example, switch S2 (purple box) closes and energy from RF (red path) is directed to capacitor C2 (green box) along the yellow path. Between apertures of LO_I- (orange box), switch S2 (purple box) remains open, preventing the flow of energy through the switch and consequently discharging energy stored in capacitor C2 (green box) to load circuitry (e.g., feedback resistor(s), yellow box). Accordingly, capacitor C2 (green box) discharges stored energy, thereby outputting a down-converted inverted in-phase baseband signal portion (pink arrow) of the modulated carrier signal. Each TI Chip meets wireless telecommunication standards. *See, e.g.*, 2013 IEEE paper (discussing IEEE 802.11a, 802.11b, 802.11g, and 802.11n Wi-Fi standards); "AFE79xx Quad-Channel RF Transceiver with Feedback Path," TEXAS INSTRUMENTS, https://www.ti.com/lit/ds/symlink/afe7920.pdf?ts=1701878816296&ref_url=https%253A%252F%252Fwww.google.com%252F (discussing 3G/4G/5G cellular standards).

11

Stored Energy

The power delivered to a circuit element is the product of the current and the voltage (provided that the references have the passive configuration):

$$p(t) = v(t)i(t) \tag{3.9}$$

Using Equation 3.3 to substitute for the current, we have

$$p(t) = Cv\frac{dv}{dt} \tag{3.10}$$

Suppose we have a capacitor that initially has $v(t_0) = 0$. Then the initial stored electrical energy is zero, and we say that the capacitor is uncharged. Furthermore, suppose that between time t_0 and some later time t the voltage changes from 0 to $v(t)$ volts. As the voltage magnitude increases, energy is delivered to the capacitor, where it is stored in the electric field between the plates.

If we integrate the power delivered from t_0 to t, we find the energy delivered:

$$w(t) = \int_{t_0}^{t} p(t)\,dt \tag{3.11}$$

Using Equation 3.10 to substitute for power, we find that

$$w(t) = \int_{t_0}^{t} Cv\frac{dv}{dt}\,dt \tag{3.12}$$

Canceling differential time and changing the limits to the corresponding voltages, we have

$$w(t) = \int_{0}^{v(t)} Cv\,dv \tag{3.13}$$

Integrating and evaluating, we get

$$w(t) = \frac{1}{2}Cv^2(t) \tag{3.14}$$

This represents energy stored in the capacitance that can be returned to the circuit.

See Hambley, *Electrical Engineering Principles and Applications*, 6th Ed., Prentice Hall, 2014, p. 129 -130.

12

Alternatively, in addition to, or instead of the load circuitry shown above, the load includes the load circuitry shown in the brown box below.

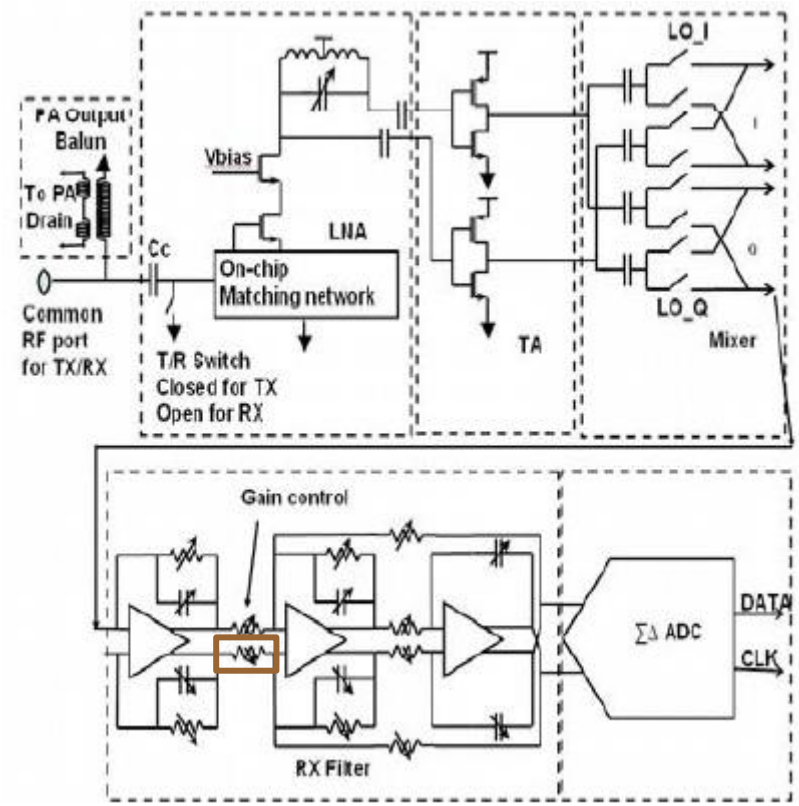

Figure 19.1.4 of 2013 IEEE paper.

13

wherein the portions of transferred energy from each of the first and second switch are integrated over time to accumulate said portions of transferred energy from which said down-converted in-phase baseband signal portion and said down-converted inverted in-phase baseband signal portion are derived; and	Each TI Chip is/includes a system wherein portions of transferred energy from each of the first and second switch (e.g., switch S1 and switch S2, respectively) are integrated over time to accumulate the portions of transferred energy from which the down-converted in-phase baseband signal portion and the down-converted inverted in-phase baseband signal portion are derived. In particular, capacitor C1 and C2 accumulate the portions of transferred energy (i.e., energy portions passing through enabled switches S1 and S2, respectively), thereby integrating the portions of transferred energy over time. *See* Hambley, *Electrical Engineering Principles and Applications*, 6th Ed., Prentice Hall, 2014, p. 129 -130 (above). During an aperture of LO_I+ (orange box), for example, switch S1 (purple box) closes and energy from RF (red path) is directed to capacitor C1(green box) along the purple path. The closing of switch S1 (purple box), therefore, results in capacitor C1 (green box) integrating energy (i.e., during apertures of the LO_I+ signal). Between each aperture of control signal LO_I+, switch S1 remains open (i.e., RF signal is prevented from passing through the switch). Accordingly, capacitor C1 discharges a portion of the transferred energy to the load circuitry (e.g., feedback resistor(s), yellow box). The energy discharged during any given discharge cycle is not completely discharged, with the remaining undischarged energy from the given discharge cycle becoming an initial condition for the next charging cycle. Accordingly, the capacitor integrates the energy over the aperture periods. Likewise, during an aperture of LO_I- (orange box), switch S2 (purple box) closes and energy from RF (red path) is directed to capacitor C2 (green box) along the yellow path. The closing of switch S2 (purple box), therefore, results in capacitor C2 (green box) integrating energy (i.e., during apertures of the LO_I- signal). Between each aperture of control signal LO_I-, switch S2 remains open (i.e., RF signal is prevented from passing through the switch). Accordingly, capacitor C2 discharges a portion of the transferred energy to the load circuitry (e.g., feedback resistor(s), yellow box). The energy discharged during any given discharge cycle is not completely discharged, with the remaining undischarged energy from the given discharge cycle becoming an initial condition for the next charging cycle. Accordingly, the capacitor integrates the energy over the aperture periods.

14

a first differential amplifier circuit that combines said down-converted in-phase baseband signal portion with said down-converted inverted in-phase baseband signal portion and outputs a first channel down-converted differential in-phase baseband signal.	Each TI Chip includes a first differential amplifier circuit (e.g., differential amplifier circuit including operational amplifier (op-amp) with resistor-capacitor feedback, shown in the purple box) that combines the down-converted in-phase signal portion (e.g., shown in the red box) with the inverted in-phase signal portion (e.g., shown in the blue box) and outputs a first channel down-converted differential in-phase signal (e.g., shown in the pink box). 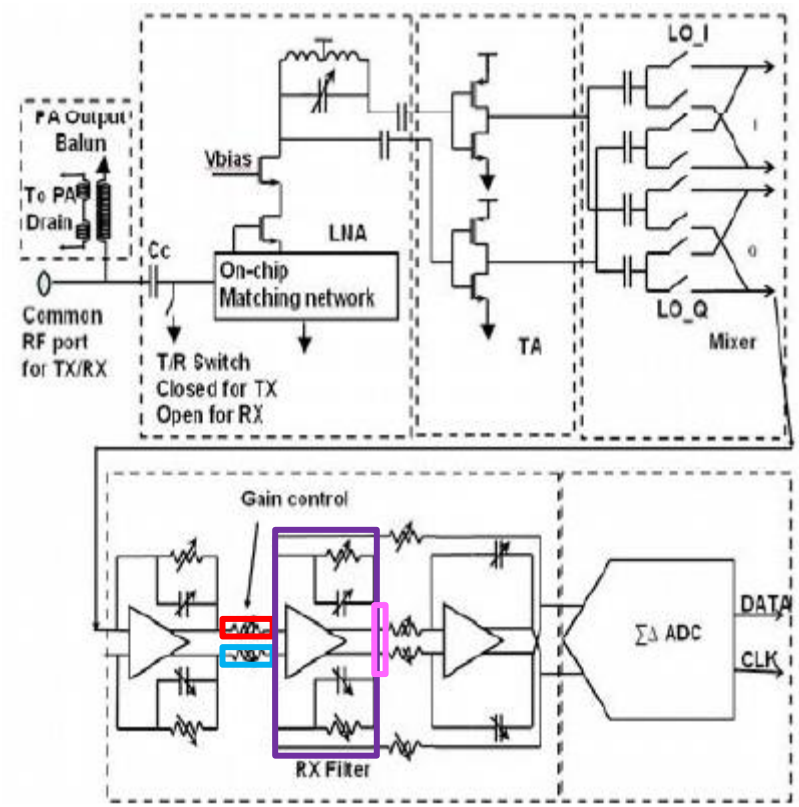 Figure 19.1.4 of 2013 IEEE paper.

15

The differential amplifier circuit (purple box) receives two inputs, down-converted in-phase signal portion (red box) and down-converted inverted in-phase signal portion (blue box), and outputs a first channel down-converted differential in-phase signal (pink box), which is a function of the difference between the inputs. In particular, differential amplifier circuit combines the first down-converted signal portion (red box) with the second down-converted signal portion (blue box) and outputs a single channel down-converted signal (e.g., shown in the pink box) that is a function of the combination of the first and second down-converted signal portions.

10.1.2 Differential Signals

Let us return to the circuit of Fig. 10.2(a) and recall that the duplicate stage consisting of Q_2 and R_{C2} remains "idle," thereby "wasting" current. We may therefore wonder if this stage can provide signal amplification in addition to establishing a reference point for V_{out}. In our first attempt, we directly apply the input signal to the base of Q_2 [Fig. 10.3(a)]. Unfortunately, the signal components at X and Y are in phase, canceling each other as they appear in $v_X - v_Y$:

$$v_X = A_v v_{in} + v_\psi \tag{10.5}$$

$$v_Y = A_v v_{in} + v_\psi \tag{10.6}$$

$$\Rightarrow v_X - v_Y = 0. \tag{10.7}$$

For the signal components to *enhance* each other at the output, we can *invert* one of the input phases as shown in Fig. 10.3(b), obtaining

$$v_X = A_v v_{in} + v_\psi \tag{10.8}$$

$$v_Y = -A_v v_{in} + v_\psi \tag{10.9}$$

and hence

$$v_X - v_Y = 2A_v v_{in}. \tag{10.10}$$

B. Razavi, *Fundamentals of Microelectronics* at p. 439

Energy, power, current, voltage, resistance/impedance, and time relationships can be expressed as follows:

Energy Power Current Voltage Resistance Impedance Time Relationships

$$E = \left(\frac{J}{\Delta t}\right) \cdot \Delta t$$

$$P = \left(\frac{J}{\Delta t}\right)$$

$$E = P \cdot \Delta t$$

Where:

E is Energy in Joules
P is Power in Watts*
t is Time in Seconds
I is Current in Amperes
V is Voltage in Volts
R is Resistance or Impedance (Z) in Ohms

*Power is the rate of energy transfer

$$P = V \cdot I \qquad P = \left(\frac{V^2}{R}\right) \qquad P = I^2 \cdot R$$

$$E = V \cdot I \cdot \Delta t \qquad E = \left(\frac{V^2}{R}\right) \cdot \Delta t \qquad E = I^2 \cdot R \cdot \Delta t$$

$$V = \left(\frac{E}{I \cdot \Delta t}\right) \qquad V = \sqrt{\left(\frac{E \cdot R}{\Delta t}\right)} \qquad I = \sqrt{\left(\frac{E}{R \cdot \Delta t}\right)}$$

$$I = \left(\frac{E}{V \cdot \Delta t}\right)$$

17

Alternatively, each TI Chip includes a first differential amplifier circuit (e.g., differential amplifier circuit including operational amplifier (op-amp), shown in the purple box) that combines the down-converted in-phase signal portion (e.g., shown in the red box) with the inverted in-phase signal portion (e.g., shown in the blue box) and outputs a first channel down-converted differential in-phase signal (e.g., shown in the pink box).

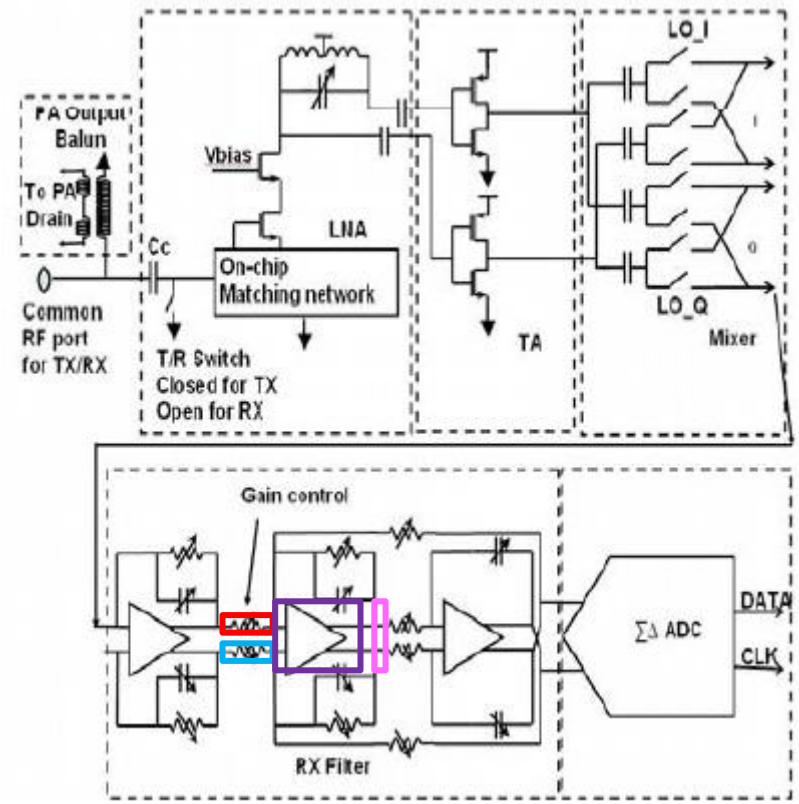

Figure 19.1.4 of 2013 IEEE paper.

18

Alternatively, each TI Chip includes a first differential amplifier circuit (e.g., differential amplifier circuit including an operational amplifier (op-amp) with resistor-capacitor feedback, shown in the purple box) that combines the down-converted in-phase signal portion (e.g., shown in the red box) with the inverted in-phase signal portion (e.g., shown in the blue box) and outputs a first channel down-converted differential in-phase signal (e.g., shown in the pink box).

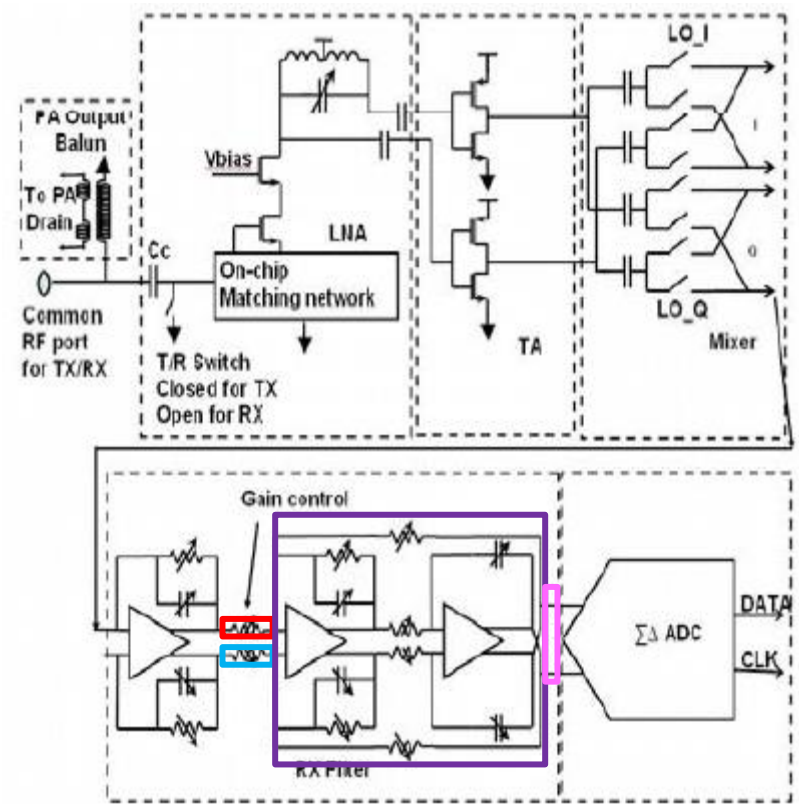

Figure 19.1.4 of 2013 IEEE paper.

19

Claim 2	TI Chips
The system of claim 1, wherein said modulated carrier signal includes an amplitude variation.	Each TI Chip is/includes a system wherein the modulated carrier signal (e.g., RF) includes an amplitude variation. Each TI Chip meets wireless telecommunication standards. *See, e.g.*, 2013 IEEE paper (discussing IEEE 802.11a, 802.11b, 802.11g, and 802.11n Wi-Fi standards); "AFE79xx Quad-Channel RF Transceiver with Feedback Path," TEXAS INSTRUMENTS, https://www.ti.com/lit/ds/symlink/afe7920.pdf?ts=1701878816296&ref_url=https%253A%252F%252Fwww.google.com%252F (discussing 3G/4G/5G cellular standards). Chipsets using wireless mobile telecommunications and IEEE 802.11 technology include support for various modulation schemes such as QAM (quadrature amplitude modulation) and QPSK (quadrature phase shift keying).
Claim 3	**TI Chips**
The system of claim 1, wherein said modulated carrier signal includes a phase variation.	Each TI Chip is/includes a system wherein the modulated carrier signal (e.g., RF) includes a phase variation. *See* claim 2.
Claim 4	**TI Chips**
The system of claim 1, wherein said modulated carrier signal includes a combination of amplitude variation and phase variation.	Each TI Chip is/includes a system wherein the modulated carrier signal (e.g., RF) includes a combination of amplitude variation and phase variation. *See* claim 2.

20

Claim 5	TI Chips
The system of claim 1, wherein the first switch is on for less than one-half cycle of the modulated carrier signal.	Each TI Chip is/includes a system wherein the first switch (e.g., switch S1) is on for less than one-half cycle of the modulated carrier signal (e.g., RF). Switch S1 (purple box) includes transistors that operate as a switch with switching frequency and duty cycles controlled by LO_I+ (orange box). In particular, switch S1 (purple box) periodically opens and closes, thereby controlling the current flow of RF (red path) in the circuit. The time period for which switch S1 (purple box) is open/closed is determined by control signal LO_I+ (orange box). Specifically, control signal LO_I+ (orange box) enables (i.e., closes) switch S1 (purple box) during an aperture thereof. An aperture describes the pulse width of the control signal (i.e., the length of activation within the signal) when the switch is closed. The diagram below represents an exemplary waveform of control signal LO_I+. 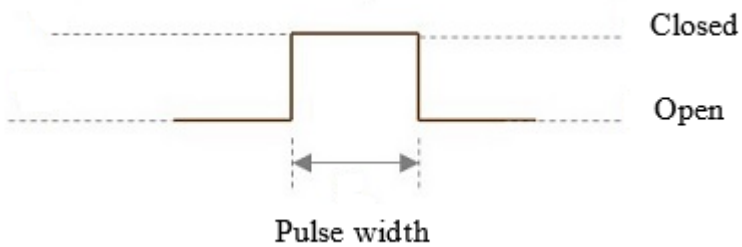 An aperture of the control signal (e.g., LO_I+) therefore possesses a time duration or duty cycle with respect to an LO rate. The duty cycle of the aperture controlled by the control signal (e.g., LO_I+) is the percentage of time during a cycle in the switch is closed. On information and belief, the frequency of control signal LO_I+ is substantially similar to the frequency of the RF signal. On information and belief, the control signal (e.g., LO_I+) has a sampling aperture with a nominal 25% duty cycle. *See* N. Klemmer et al., "A 45nm CMOS RF-to-Bits LTE/WCDMA FDD/TDD 2×2 MIMO Base-Station Transceiver SoC with 200MHz RF Bandwidth," in *IEEE Int. Solid-State Circuits Conf. (ISSCC) Dig. Tech. Papers*, 2016, pp. 164-165; N. Klemmer (2016, February 2). *A 45nm CMOS RF-to-Bits LTE/WCDMA FDD/TDD 2×2 MIMO Base Station Transceiver SoC with 200MHz RF Bandwidth* [PowerPoint]. ISSCC, San Francisco, CA, USA; C. Yeh et al., "Multi-band, Multi-mode, Low-power CMOS Receiver Front-end for Sub-GHz ISM/SRD Band with Narrow Channel Spacing," *Proceedings of the IEEE 2012 Custom Integrated Circuits Conference*, San Jose, CA, USA, 2012, pp. 1-4. Accordingly, switch S1 is on for less than one-half cycle of RF.

21

Claim 8	TI Chips
The system of claim 1, wherein the first and second control signals each control a charging and discharging cycle of their respective energy storage element by respectively controlling the first and second switching devices so that for each switching device said portion of energy that is distinguishable from noise is transferred to the respective storage element when the switch is on during the charging cycle, and a portion of the transferred energy is discharged during the discharging part of the cycle for each respective switching device when the switching device is off.	Each TI Chip is/includes a system wherein the first and second control signals (e.g., LO_I+, LO_I-, respectively) each control a charging and discharging cycle of their respective energy storage element (e.g., capacitors C1, C2, respectively) by respectively controlling the first and second switching devices (e.g., switch S1, switch S2, respectively) so that for each switching device said portion of energy that is distinguishable from noise is transferred to the respective storage element when the switch is on during the charging cycle, and a portion of the transferred energy is discharged during the discharging part of the cycle for each respective switching device when the switching device is off. As explained above, the recursive closing/opening of the switch S1 (purple box) periodically couples the RF signal (red path) to a capacitor C1 (green box) according to control signal LO_I+ (orange box). During a sampling aperture of control signal LO_I+, switch S1 closes and energy from the RF signal is directed to capacitor C1 along the purple path. Between each sampling aperture of LO_I+, switch S1 remains open (i.e., RF signal is prevented from passing through the switch). Accordingly, capacitor C1 discharges a portion of the transferred energy to a load (e.g., feedback resistor(s), yellow box). Likewise, the recursive closing/opening of the switch S2 (purple box) periodically couples the RF signal (red path) to a capacitor C2 (green box) according to control signal LO_I- (orange box). During a sampling aperture of control signal LO_I-, switch S2 closes and energy from the RF signal is directed to capacitor C2 along the yellow path. Between each sampling aperture of LO_I-, switch S2 remains open (i.e., RF signal is prevented from passing through the switch). Accordingly, capacitor C2 discharges a portion of the transferred energy to a load (e.g., feedback resistor(s), yellow box).

22

Claim 9	TI Chips
The system of claim 8, wherein for each respective storage element, the energy discharged during any given discharge cycle is not completely discharged, with the remaining undischarged energy from the given discharge cycle becoming an initial condition for the next charging cycle.	Each TI Chip is/includes a system wherein for each respective storage element (e.g., capacitors C1, C2), the energy discharged during any given discharge cycle is not completely discharged, with the remaining undischarged energy from the given discharge cycle becoming an initial condition for the next charging cycle. The first and second control signals (e.g., LO_I+ and LO_I-, respectively) each control a charging and discharging cycle of their respective energy storage element (e.g., capacitors C1 and C2, respectively) by respectively controlling the first and second switching devices (e.g., switch S1, switch S2, respectively) so that for each switching device the portion of energy that is distinguishable from noise is transferred to the respective storage element when the switch is on during the charging cycle, and a portion of the transferred energy is discharged during the discharging part of the cycle for each respective switching device when the switching device is off. The first energy storage element (e.g., capacitor C1) charges when the first switch (switch S1) is closed (“ON”) and partially discharges when the first switch is open (“OFF”). On information and belief, capacitor C1 does not completely discharge after the first charging cycle, which means that there is energy available from the previous charging cycle. Thus, the energy discharged by the first energy storage element during any given discharge cycle is not fully discharged with the remaining undischarged energy from the given discharge cycle becoming an initial condition for the next charging cycle of the first energy storage element. Likewise, the second energy storage element (e.g., capacitor C2) charges when the second switch (switch S2) is closed (“ON”) and partially discharges when the second switch is open (“OFF”). On information and belief, capacitor C2 does not completely discharge after the charging cycle, which means that there is energy available from the previous charging cycle. Thus, the energy discharged by the second energy storage element during any given discharge cycle is not fully discharged with the remaining undischarged energy from the given discharge cycle becoming an initial condition for the next charging cycle of the second energy storage element.

23

Claim 11	TI Chips
The system of claim 1, wherein the frequencies of the first and second apertures have periods that are two (2) percent or greater of the modulated carrier signal's period.	On information and belief, each TI Chip is/includes a system wherein the frequencies of the first and second apertures have periods that are two (2) percent or greater of the modulated carrier signal's (e.g., RF) period. The period of the modulated carrier signal is defined as the amount of time required to complete one full cycle. An aperture describes the pulse width of the control signal (i.e., the length of activation within the signal) when the switch is closed. The diagram below represents an exemplary waveform of an aperture signal (e.g., LO_I+, LO_I-). 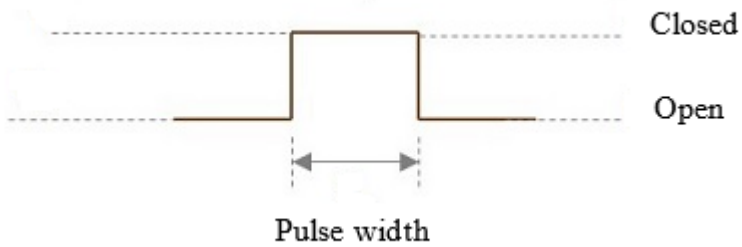 Apertures of the first and second control signals (e.g., LO_I+, LO_I-) possess a time duration or duty cycle with respect to an LO rate. The duty cycle is the percentage of time during a cycle in which the signal is active (switch is closed). On information and belief, the frequency of the control signals is substantially similar to the frequency of the modulated carrier signal (e.g., RF signal). On information and belief, the control signals (e.g., LO_I+, LO_I-) have a sampling aperture with a nominal 25% duty cycle. *See* N. Klemmer et al., "A 45nm CMOS RF-to-Bits LTE/WCDMA FDD/TDD 2×2 MIMO Base-Station Transceiver SoC with 200MHz RF Bandwidth," in *IEEE Int. Solid-State Circuits Conf. (ISSCC) Dig. Tech. Papers*, 2016, pp. 164-165; N. Klemmer (2016, February 2). *A 45nm CMOS RF-to-Bits LTE/WCDMA FDD/TDD 2×2 MIMO Base Station Transceiver SoC with 200MHz RF Bandwidth* [PowerPoint]. ISSCC, San Francisco, CA, USA; C. Yeh et al., "Multi-band, Multi-mode, Low-power CMOS Receiver Front-end for Sub-GHz ISM/SRD Band with Narrow Channel Spacing," *Proceedings of the IEEE 2012 Custom Integrated Circuits Conference*, San Jose, CA, USA, 2012, pp. 1-4. Accordingly, the frequencies of the first and second apertures have periods that are two (2) percent or greater of the modulated carrier signal's period.

24

Claim 12	TI Chips
The system of claim 1, wherein the frequencies of the first and second apertures have periods that are five (5) percent or greater of the modulated carrier signal's period.	On information and belief, each TI Chip is/includes a system wherein the frequencies of the first and second apertures have periods that are five (5) percent or greater of the modulated carrier signal's (e.g., RF) period. *See* claim 11.
Claim 13	**TI Chips**
The system of claim 1, wherein the frequencies of the first and second apertures have periods that are ten (10) percent or greater of the modulated carrier signal's period.	On information and belief, each TI Chip is/includes a system wherein the frequencies of the first and second apertures have periods that are ten (10) percent or greater of the modulated carrier signal's (e.g., RF) period. *See* claim 11.
Claim 14	**TI Chips**
The system of claim 1, wherein the frequencies of the first and second apertures have periods that are twelve and a half (12.5) percent or greater of the modulated carrier signal's period.	On information and belief, each TI Chip is/includes a system wherein the frequencies of the first and second apertures have periods that are twelve and a half (12.5) percent or greater of the modulated carrier signal's period. *See* claim 11.

25

Claim 15	TI Chips
The system of claim 1, further comprising: a first filter that filters said down-converted in-phase baseband signal portion; and a second filter that filters said down-converted inverted in-phase baseband signal portion.	Each TI Chip is/includes a system further comprising: a first filter (shown along orange path) that filters the down-converted in-phase signal portion; and a second filter (shown along the blue path) that filters the down-converted inverted in-phase signal portion. 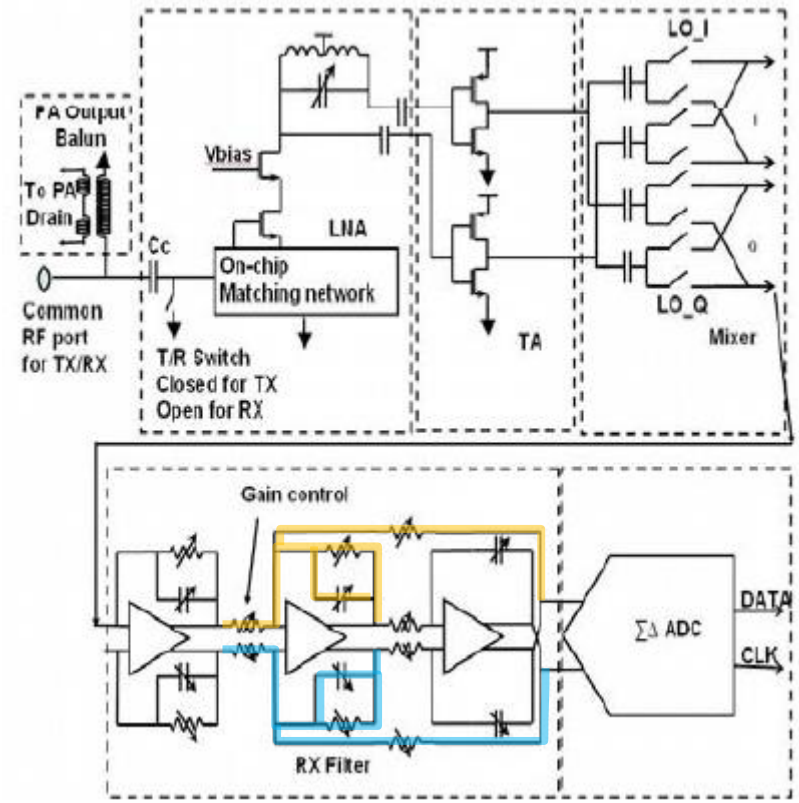 Figure 19.1.4 of 2013 IEEE paper.

26

Claim 16	TI Chips
The system of claim 15, wherein the first and second filters each comprise a low-pass filter.	On information and belief, each TI Chip is/includes a system wherein the first and second filters each comprise a low-pass filter. *See* claim 15.

27

Claim 17	TI Chips
The system of claim 1, wherein said portions of transferred energy from each of the first and second switch which are integrated over time to accumulate said portions of transferred energy are integrated by a separate integration module coupled to the output of each said first and second switch.	Each TI Chip is/includes a system wherein the portions of transferred energy from each of the first and second switch (e.g., switch S1, switch S2, respectively) which are integrated over time to accumulate the portions of transferred energy are integrated by a separate integration module (e.g., capacitors C1, C2, shown in the green boxes) coupled to the output of each the first and second switch. 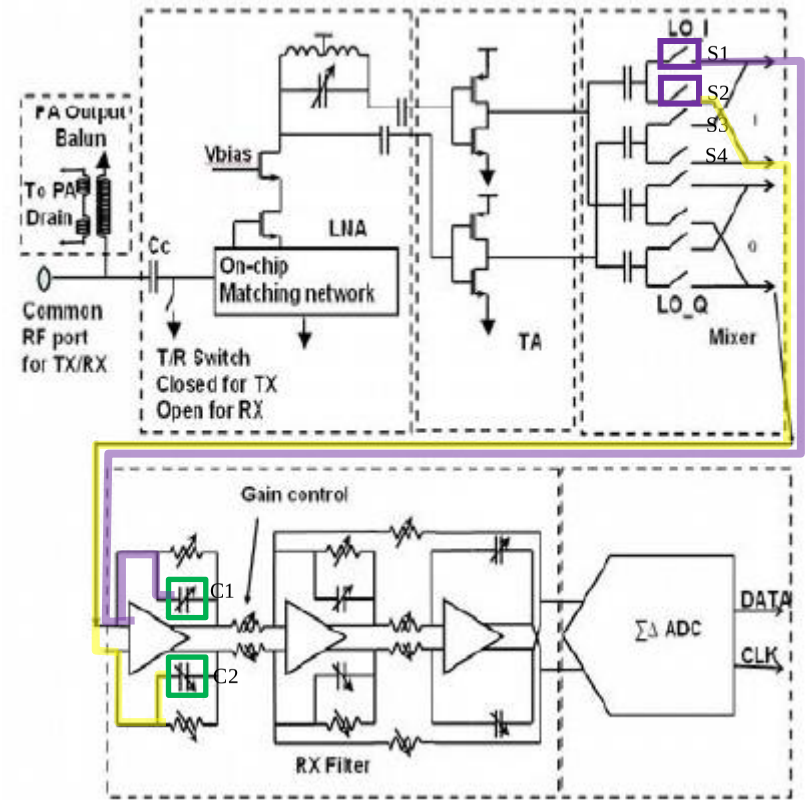 Figure 19.1.4 of 2013 IEEE paper.

28

	The recursive closing/opening of switch S1 (purple box) periodically couples the RF signal to capacitor C1 (green box). During an aperture of LO_I+ (orange box), for example, switch S1 (purple box) closes and energy from RF signal is directed to capacitor C1 (green box) along the purple path. Likewise, the recursive closing/opening of switch S2 (purple box) periodically couples the RF signal to capacitor C2 (green box). During an aperture of LO_I- (orange box), for example, switch S2 (purple box) closes and energy from RF signal is directed to capacitor C2 (green box) along the yellow path. Accordingly, capacitors C1, C2 (green boxes) accumulate portions of transferred energy from each of the first and second switch (switch S1, switch S2, respectively), thereby integrating the portion of transferred energy over time.

29

Stored Energy

The power delivered to a circuit element is the product of the current and the voltage (provided that the references have the passive configuration):

$$p(t) = v(t)i(t) \tag{3.9}$$

Using Equation 3.3 to substitute for the current, we have

$$p(t) = Cv\frac{dv}{dt} \tag{3.10}$$

Suppose we have a capacitor that initially has $v(t_0) = 0$. Then the initial stored electrical energy is zero, and we say that the capacitor is uncharged. Furthermore, suppose that between time t_0 and some later time t the voltage changes from 0 to $v(t)$ volts. As the voltage magnitude increases, energy is delivered to the capacitor, where it is stored in the electric field between the plates.

If we integrate the power delivered from t_0 to t, we find the energy delivered:

$$w(t) = \int_{t_0}^{t} p(t)\,dt \tag{3.11}$$

Using Equation 3.10 to substitute for power, we find that

$$w(t) = \int_{t_0}^{t} Cv\frac{dv}{dt}\,dt \tag{3.12}$$

Canceling differential time and changing the limits to the corresponding voltages, we have

$$w(t) = \int_{0}^{v(t)} Cv\,dv \tag{3.13}$$

Integrating and evaluating, we get

$$w(t) = \frac{1}{2}Cv^2(t) \tag{3.14}$$

This represents energy stored in the capacitance that can be returned to the circuit.

See Hambley, *Electrical Engineering Principles and Applications*, 6th Ed., Prentice Hall, 2014, p. 129 -130.

30

Claim 18	TI Chips
The system of claim 1, wherein said first and second storage elements are capacitive storage circuits, and wherein said portions of transferred energy from each of the first and second switch which are integrated over time to accumulate said portions of transferred energy are integrated by the capacitive storage circuits as they accumulate charge during successive sampling apertures.	Each TI Chip is/includes a system wherein the first and second storage elements (e.g., capacitors C1 and C2, respectively) are capacitive storage circuits, and wherein the portions of transferred energy from each of the first and second switch which are integrated over time to accumulate the portions of transferred energy are integrated by the capacitive storage circuits as they accumulate charge during successive sampling apertures. *See* claim 17.

31

Claim 19	TI Chips
The system of claim 1, further comprising: a third switch coupled to a third control signal which comprises a sampling aperture with a specified frequency, wherein the third switch is on and a portion of energy that is distinguishable from noise is transferred from the modulated carrier signal as an output of said third switch during the sampling aperture of the third control signal;	Each TI Chip includes a third switch (e.g., switch S5, shown in the purple box) coupled to a third control signal (e.g., LO_Q+, represented by LO_Q in the orange box) which comprises a sampling aperture with a specified frequency, wherein the third switch is on and a portion of energy that is distinguishable from noise is transferred from the modulated carrier signal (e.g., RF signal, represented by the red path) as an output of the third switch during the sampling aperture of the third control signal. 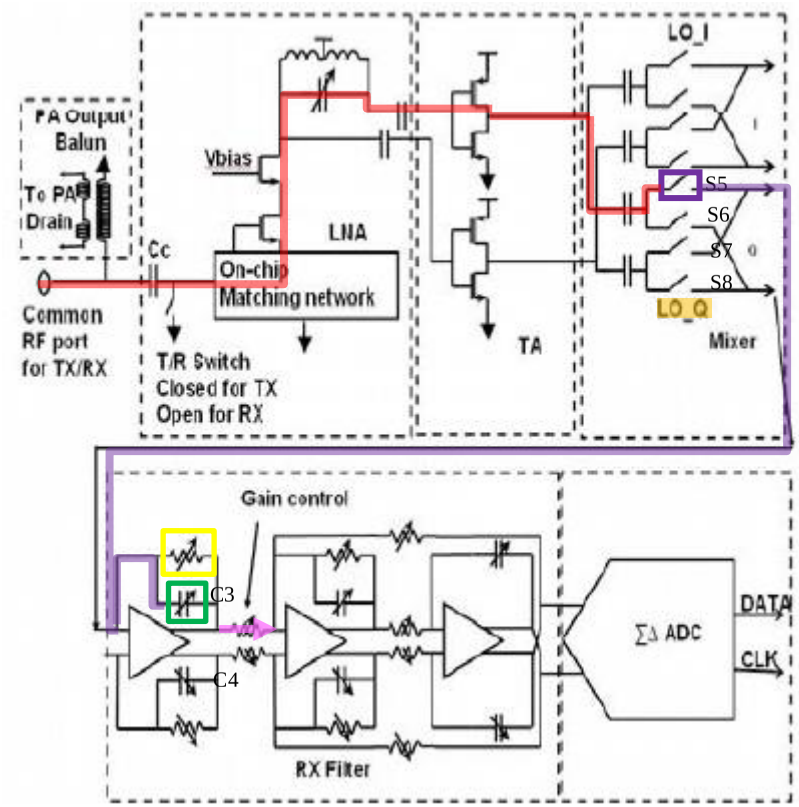 Figure 19.1.4 of 2013 IEEE paper. On information and belief, the Q+ path has the same circuit configuration as the I+ path.

Switch S5 (purple box) includes transistors that operate as a switch with switching frequency and duty cycles controlled by LO_Q+ (orange box). In particular, switch S5 (purple box) periodically opens and closes, thereby controlling the current flow of RF (red path) in the circuit. The time period for which switch S5 (purple box) is open/closed is determined by LO_Q+ (orange box). Specifically, LO_Q+ (orange box) enables (i.e., closes) switch S5 (purple box) during an aperture thereof. An aperture describes the pulse width of the control signal (i.e., the length of activation within the signal) when the switch is closed. The diagram below represents an exemplary waveform of control signal LO_Q+.

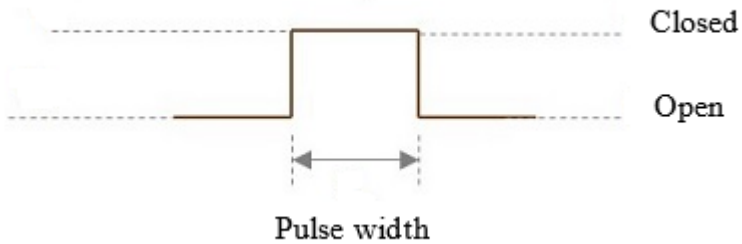

When switch S5 (purple box) is ON (closed), current can pass through the switch S5; when the switch is OFF (opened), current is blocked from passing through the switch. The switch S5 is turned ON (closed) by sending control signal LO_Q+ to the switch at an independent control input. The switch is kept ON (kept closed) for the duration of the signal pulse (i.e., during a sampling aperture of the pulse).

On information and belief, the pulses of control signal LO_Q+ have a non-negligible, periodic aperture (e.g., nominal 25% duty cycle). *See* N. Klemmer et al., "A 45nm CMOS RF-to-Bits LTE/WCDMA FDD/TDD 2×2 MIMO Base-Station Transceiver SoC with 200MHz RF Bandwidth," in *IEEE Int. Solid-State Circuits Conf. (ISSCC) Dig. Tech. Papers*, 2016, pp. 164-165; N. Klemmer (2016, February 2). *A 45nm CMOS RF-to-Bits LTE/WCDMA FDD/TDD 2×2 MIMO Base Station Transceiver SoC with 200MHz RF Bandwidth* [PowerPoint]. ISSCC, San Francisco, CA, USA; C. Yeh et al., "Multi-band, Multi-mode, Low-power CMOS Receiver Front-end for Sub-GHz ISM/SRD Band with Narrow Channel Spacing," *Proceedings of the IEEE 2012 Custom Integrated Circuits Conference*, San Jose, CA, USA, 2012, pp. 1-4. As such, switch S5 (purple box) is closed during an aperture of LO_Q+ (orange box) and remains open between apertures of LO_Q+. During an aperture of LO_Q+ (orange box), energy from RF (red path) that is distinguishable from noise is transferred across the switch to an output of switch S5 (purple box).

33

a third energy storage element that stores the transferred energy from the modulated carrier signal and outputs a down-converted quadrature-phase baseband signal portion of said modulated carrier signal;	Each TI Chip includes a third energy storage element (e.g., capacitor C3, shown in the green box) that stores the transferred energy from the modulated carrier signal (e.g., RF, represented by the red path) and outputs a down-converted quadrature-phase baseband signal portion (e.g., represented by the pink arrow) of the modulated carrier signal. 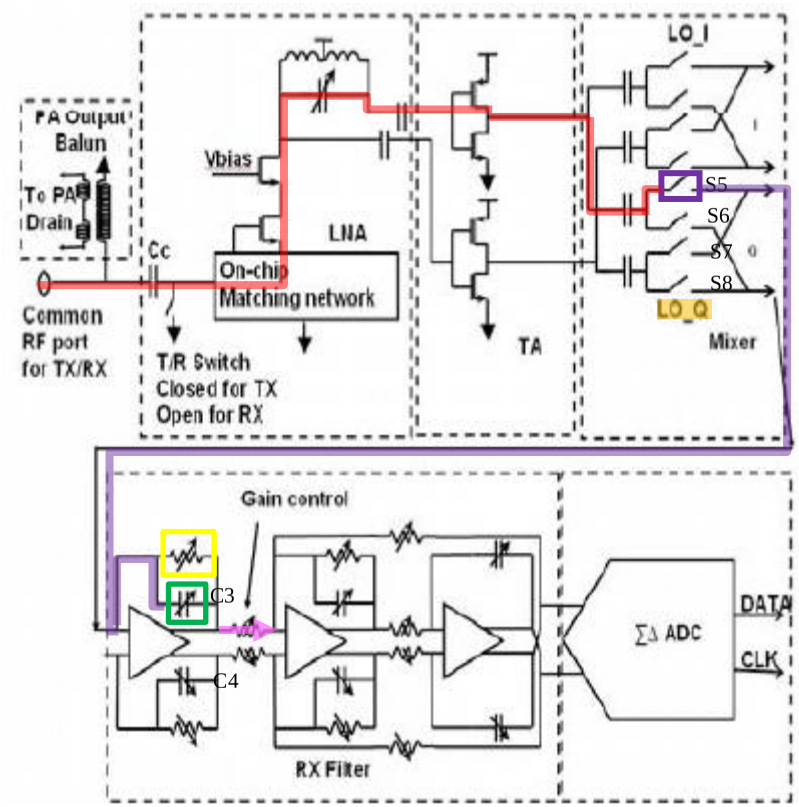 Figure 19.1.4 of 2013 IEEE paper.

34

	As explained above, control signal LO_Q+ (orange box) enables (i.e., closes) switch S5 (purple box) during an aperture thereof. Successive pulses of LO_Q+ (orange box) therefore recursively close/open switch S5 (purple box). The recursive closing/opening of switch S5 (purple box) periodically couples the input signal RF (red path) to capacitor C3 (green box). During an aperture of LO_Q+ (orange box), for example, switch S5 (purple box) closes and energy from RF (red path) is directed to capacitor C3 (green box) along the purple path. Between apertures of LO_Q+ (orange box), switch S5 (purple box) remains open, preventing the flow of energy through the switch and consequently discharging energy stored in capacitor C3 (green box) to load circuitry (e.g., feedback resistor(s), yellow box). Accordingly, capacitor C3 (green box) discharges stored energy, thereby outputting a down-converted quadrature-phase baseband signal portion (pink arrow) of the modulated carrier signal. Each TI Chip meets wireless telecommunication standards. *See, e.g.*, 2013 IEEE paper (discussing IEEE 802.11a, 802.11b, 802.11g, and 802.11n Wi-Fi standards); "AFE79xx Quad-Channel RF Transceiver with Feedback Path," TEXAS INSTRUMENTS, https://www.ti.com/lit/ds/symlink/afe7920.pdf?ts=1701878816296&ref_url=https%253A%252F%252Fwww.google.com%252F (discussing 3G/4G/5G cellular standards).

35

Stored Energy

The power delivered to a circuit element is the product of the current and the voltage (provided that the references have the passive configuration):

$$p(t) = v(t)i(t) \tag{3.9}$$

Using Equation 3.3 to substitute for the current, we have

$$p(t) = Cv\frac{dv}{dt} \tag{3.10}$$

Suppose we have a capacitor that initially has $v(t_0) = 0$. Then the initial stored electrical energy is zero, and we say that the capacitor is uncharged. Furthermore, suppose that between time t_0 and some later time t the voltage changes from 0 to $v(t)$ volts. As the voltage magnitude increases, energy is delivered to the capacitor, where it is stored in the electric field between the plates.

If we integrate the power delivered from t_0 to t, we find the energy delivered:

$$w(t) = \int_{t_0}^{t} p(t)\,dt \tag{3.11}$$

Using Equation 3.10 to substitute for power, we find that

$$w(t) = \int_{t_0}^{t} Cv\frac{dv}{dt}\,dt \tag{3.12}$$

Canceling differential time and changing the limits to the corresponding voltages, we have

$$w(t) = \int_{0}^{v(t)} Cv\,dv \tag{3.13}$$

Integrating and evaluating, we get

$$w(t) = \frac{1}{2}Cv^2(t) \tag{3.14}$$

This represents energy stored in the capacitance that can be returned to the circuit.

See Hambley, *Electrical Engineering Principles and Applications*, 6th Ed., Prentice Hall, 2014, p. 129 -130.

36

Alternatively, in addition to, or instead of the load circuitry shown above, the load includes the load circuitry shown in the brown box below.

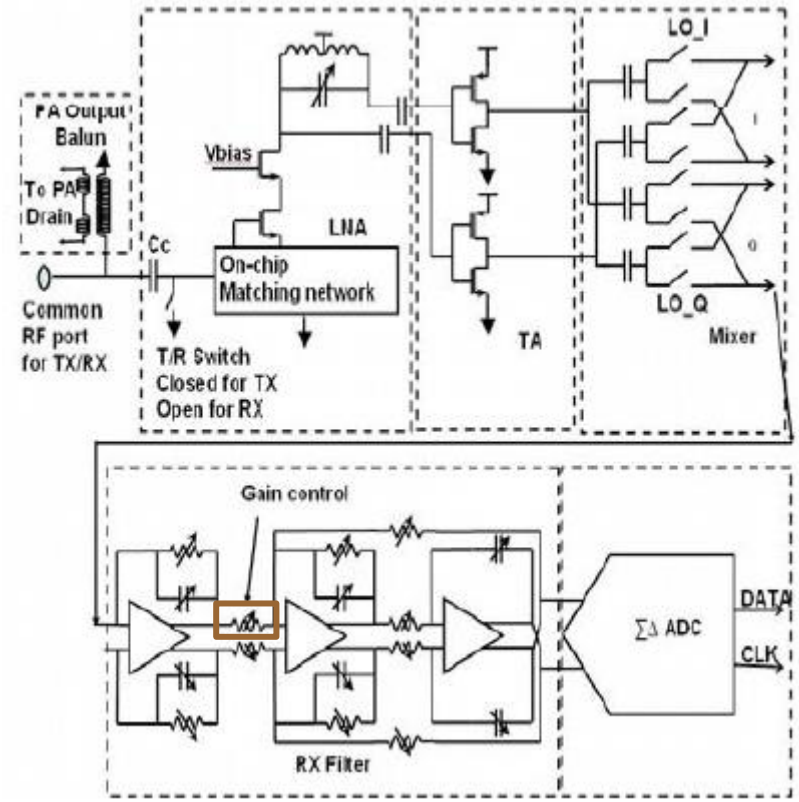

Figure 19.1.4 of 2013 IEEE paper.

37

a fourth switch coupled to a fourth control signal which comprises a sampling aperture with a specified frequency, wherein the fourth switch is on and a portion of energy that is distinguishable from noise is transferred from the modulated carrier signal as an output of said fourth switch during the sampling aperture of the fourth control signal;	Each TI Chip includes a fourth switch (e.g., switch S6, shown in the purple box) coupled to a fourth control signal (e.g., LO_Q-, represented by LO_Q in the orange box) which comprises a sampling aperture with a specified frequency, wherein the fourth switch is on and a portion of energy that is distinguishable from noise is transferred from the modulated carrier signal (e.g., RF signal, represented by the red path) as an output of the fourth switch during the sampling aperture of the fourth control signal. 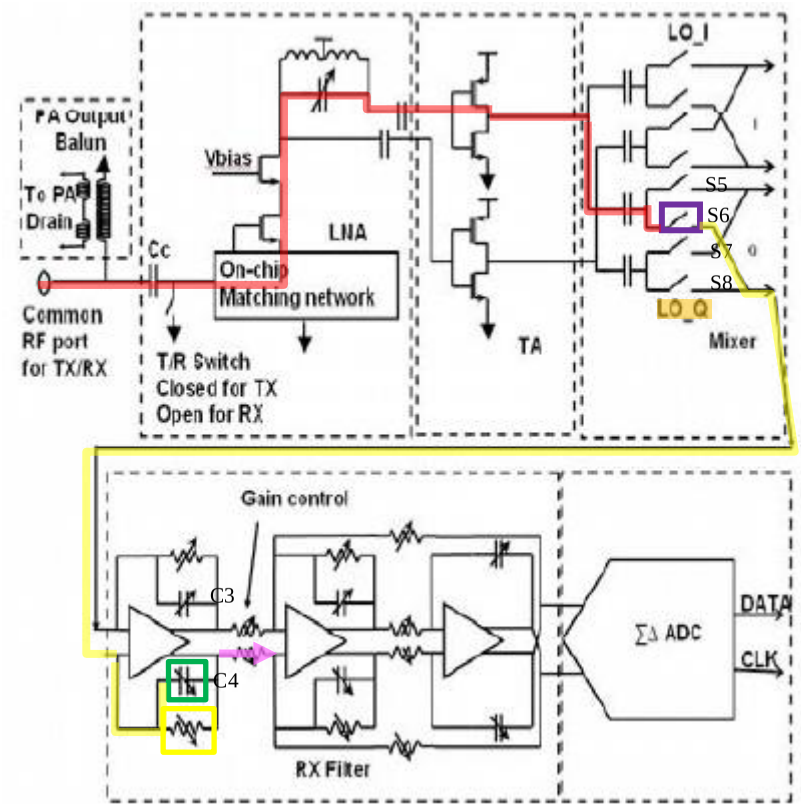 Figure 19.1.4 of 2013 IEEE paper. On information and belief, the Q- path has the same circuit configuration as the I- path.

38

Switch S6 (purple box) includes transistors that operate as a switch with switching frequency and duty cycles controlled by LO_Q- (orange box). In particular, switch S6 (purple box) periodically opens and closes, thereby controlling the current flow of RF (red path) in the circuit. The time period for which switch S6 (purple box) is open/closed is determined by control signal LO_Q- (orange box). Specifically, control signal LO_Q- (orange box) enables (i.e., closes) switch S6 (purple box) during an aperture thereof. An aperture describes the pulse width of the control signal (i.e., the length of activation within the signal) when the switch is closed. The diagram below represents an exemplary waveform of control signal LO_Q-.

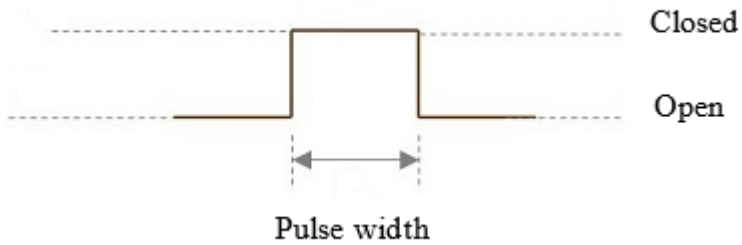

When switch S6 (purple box) is ON (closed), current can pass through the switch S6; when the switch is OFF (opened), current is blocked from passing through the switch. The switch S6 is turned ON (closed) by sending control signal LO_Q- to the switch at an independent control input. The switch is kept ON (kept closed) for the duration of the signal pulse (i.e., during a sampling aperture of the pulse).

On information and belief, the pulses of control signal LO_Q- have a non-negligible, periodic aperture (e.g., nominal 25% duty cycle). *See* N. Klemmer et al., "A 45nm CMOS RF-to-Bits LTE/WCDMA FDD/TDD 2×2 MIMO Base-Station Transceiver SoC with 200MHz RF Bandwidth," in *IEEE Int. Solid-State Circuits Conf. (ISSCC) Dig. Tech. Papers*, 2016, pp. 164-165; N. Klemmer (2016, February 2). *A 45nm CMOS RF-to-Bits LTE/WCDMA FDD/TDD 2×2 MIMO Base Station Transceiver SoC with 200MHz RF Bandwidth* [PowerPoint]. ISSCC, San Francisco, CA, USA; C. Yeh et al., "Multi-band, Multi-mode, Low-power CMOS Receiver Front-end for Sub-GHz ISM/SRD Band with Narrow Channel Spacing," *Proceedings of the IEEE 2012 Custom Integrated Circuits Conference*, San Jose, CA, USA, 2012, pp. 1-4. As such, switch S6 (purple box) is closed during an aperture of LO_Q- (orange box) and remains open between apertures of LO_Q-. During an aperture of LO_Q- (orange box), energy from RF (red path) that is distinguishable from noise is transferred across the switch to an output of switch S6 (purple box).

39

a fourth energy storage element that stores the transferred energy from the modulated carrier signal and outputs a down-converted differential quadrature-phase baseband signal portion of said modulated carrier signal;	Each TI Chip includes a fourth energy storage element (e.g., capacitor C4, shown in the green box) that stores the transferred energy from the modulated carrier signal (e.g., RF, represented by the red path) and outputs a down-converted inverted quadrature-phase baseband signal portion (e.g., represented by the pink arrow) of the modulated carrier signal. 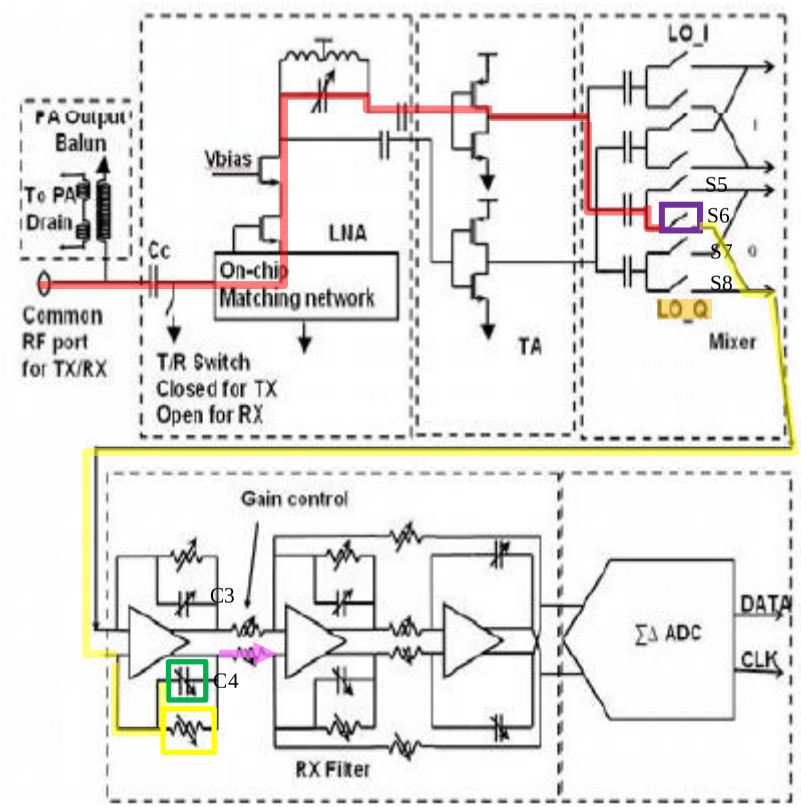 Figure 19.1.4 of 2013 IEEE paper.

40

	As explained above, control signal LO_Q- (orange box) enables (i.e., closes) switch S6 during an aperture thereof. Successive pulses of LO_Q- (orange box) therefore recursively close/open switch S6 (purple box). The recursive closing/opening of switch S6 (purple box) periodically couples the input signal RF (red path) to the capacitor C4 (green box). During an aperture of LO_Q- (orange box), for example, switch S6 (purple box) closes and energy from RF (red path) is directed to capacitor C4 (green box) along the yellow path. Between apertures of LO_Q- (orange box), switch S6 (purple box) remains open, preventing the flow of energy through the switch and consequently discharging energy stored in capacitor C4 (green box) to load circuitry (e.g., feedback resistor(s), yellow box). Accordingly, capacitor C4 (green box) discharges stored energy, thereby outputting a down-converted inverted quadrature-phase baseband signal portion (pink arrow) of the modulated carrier signal. Each TI Chip meets wireless telecommunication standards. *See, e.g.*, 2013 IEEE paper (discussing IEEE 802.11a, 802.11b, 802.11g, and 802.11n Wi-Fi standards); "AFE79xx Quad-Channel RF Transceiver with Feedback Path," TEXAS INSTRUMENTS, https://www.ti.com/lit/ds/symlink/afe7920.pdf?ts=1701878816296&ref_url=https%253A%252F%252Fwww.google.com%252F (discussing 3G/4G/5G cellular standards).

41

Stored Energy

The power delivered to a circuit element is the product of the current and the voltage (provided that the references have the passive configuration):

$$p(t) = v(t)i(t) \tag{3.9}$$

Using Equation 3.3 to substitute for the current, we have

$$p(t) = Cv\frac{dv}{dt} \tag{3.10}$$

Suppose we have a capacitor that initially has $v(t_0) = 0$. Then the initial stored electrical energy is zero, and we say that the capacitor is uncharged. Furthermore, suppose that between time t_0 and some later time t the voltage changes from 0 to $v(t)$ volts. As the voltage magnitude increases, energy is delivered to the capacitor, where it is stored in the electric field between the plates.

If we integrate the power delivered from t_0 to t, we find the energy delivered:

$$w(t) = \int_{t_0}^{t} p(t)\,dt \tag{3.11}$$

Using Equation 3.10 to substitute for power, we find that

$$w(t) = \int_{t_0}^{t} Cv\frac{dv}{dt}\,dt \tag{3.12}$$

Canceling differential time and changing the limits to the corresponding voltages, we have

$$w(t) = \int_{0}^{v(t)} Cv\,dv \tag{3.13}$$

Integrating and evaluating, we get

$$w(t) = \frac{1}{2}Cv^2(t) \tag{3.14}$$

This represents energy stored in the capacitance that can be returned to the circuit.

See Hambley, *Electrical Engineering Principles and Applications*, 6th Ed., Prentice Hall, 2014, p. 129 -130.

42

Alternatively, in addition to, or instead of the load circuitry shown above, the load includes the load circuitry shown in the brown box below.

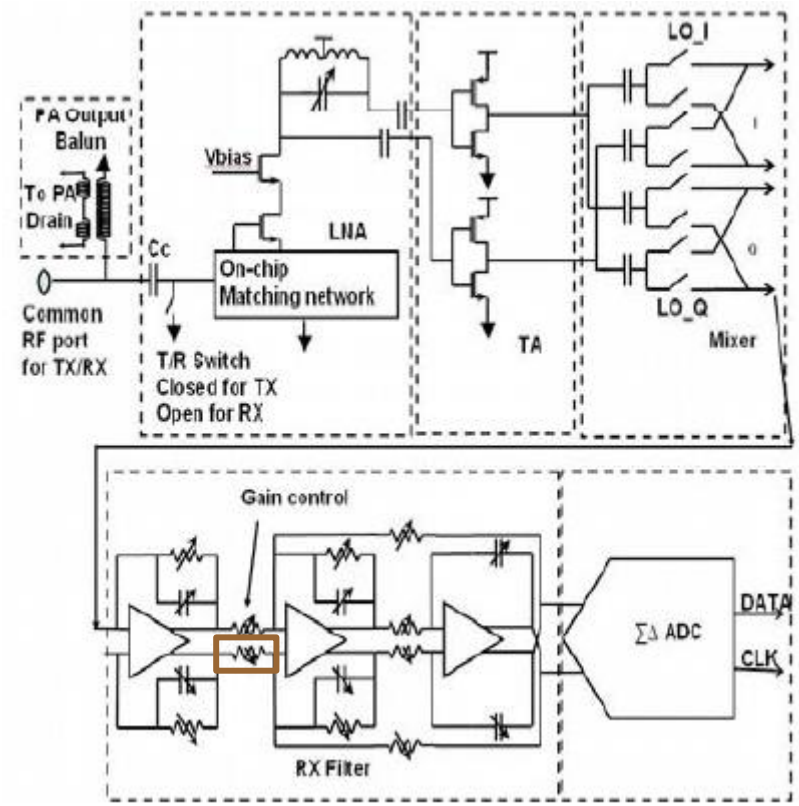

Figure 19.1.4 of 2013 IEEE paper.

43

wherein the portions of transferred energy from each of the third and fourth switch are integrated over time to accumulate said portions of transferred energy from which said down-converted quadrature-phase baseband signal portion and said down-converted differential quadrature-phase baseband signal portion are derived; and	Each TI Chip is/includes a system wherein portions of transferred energy from each of the third and fourth switch (e.g., switch S5 and switch S6, respectively) are integrated over time to accumulate the portions of transferred energy from which the down-converted quadrature-phase baseband signal portion and the down-converted inverted quadrature-phase baseband signal portion are derived. In particular, capacitors C3 and C4 accumulate the portions of transferred energy (i.e., energy portions passing through enabled switches S5 and S6, respectively), thereby integrating the portions of transferred energy over time. *See* Hambley, *Electrical Engineering Principles and Applications*, 6th Ed., Prentice Hall, 2014, p. 129 -130 (above). During an aperture of LO_Q+ (orange box), for example, switch S5 (purple box) closes and energy from RF (red path) is directed to capacitor C3 (green box) along the purple path. The closing of switch S5 (purple box), therefore, results in capacitor C3 (green box) integrating energy (i.e., during apertures of the LO_Q+ signal). Between each aperture of control signal LO_Q+, switch S5 remains open (i.e., RF signal is prevented from passing through the switch). Accordingly, capacitor C3 discharges a portion of the transferred energy to the load circuitry (e.g., feedback resistor(s), yellow box). The energy discharged during any given discharge cycle is not completely discharged, with the remaining undischarged energy from the given discharge cycle becoming an initial condition for the next charging cycle. Accordingly, the capacitor(s) integrate the energy over the aperture periods. Likewise, during an aperture of LO_Q- (orange box), switch S6 (purple box) closes and energy from RF (red path) is directed to capacitor C4 (green box) along the yellow path. The closing of switch S6 (purple box), therefore, results in capacitor C4 (green box) integrating energy (i.e., during apertures of the LO_Q- signal). Between each aperture of control signal LO_Q-, switch S6 remains open (i.e., RF signal is prevented from passing through the switch). Accordingly, capacitor C4 discharges a portion of the transferred energy to the load circuitry (e.g., feedback resistor(s), yellow box). The energy discharged during any given discharge cycle is not completely discharged, with the remaining undischarged energy from the given discharge cycle becoming an initial condition for the next charging cycle. Accordingly, the capacitor(s) integrate the energy over the aperture periods.

44

a second differential amplifier circuit that combines said down-converted quadrature-phase baseband signal portion with said down-converted differential quadrature-phase baseband signal portion and outputs a second channel down-converted differential quadrature-phase baseband signal.	Each TI Chip includes a second differential amplifier circuit (e.g., differential amplifier circuit including operational amplifier (op-amp) with parallel resistor-capacitor feedback, shown in the purple box) that combines the down-converted quadrature-phase signal portion (e.g., shown in the red box) with the inverted quadrature-phase signal portion (e.g., shown in the blue box) and outputs a second channel down-converted differential quadrature-phase signal (e.g., shown in the pink box). 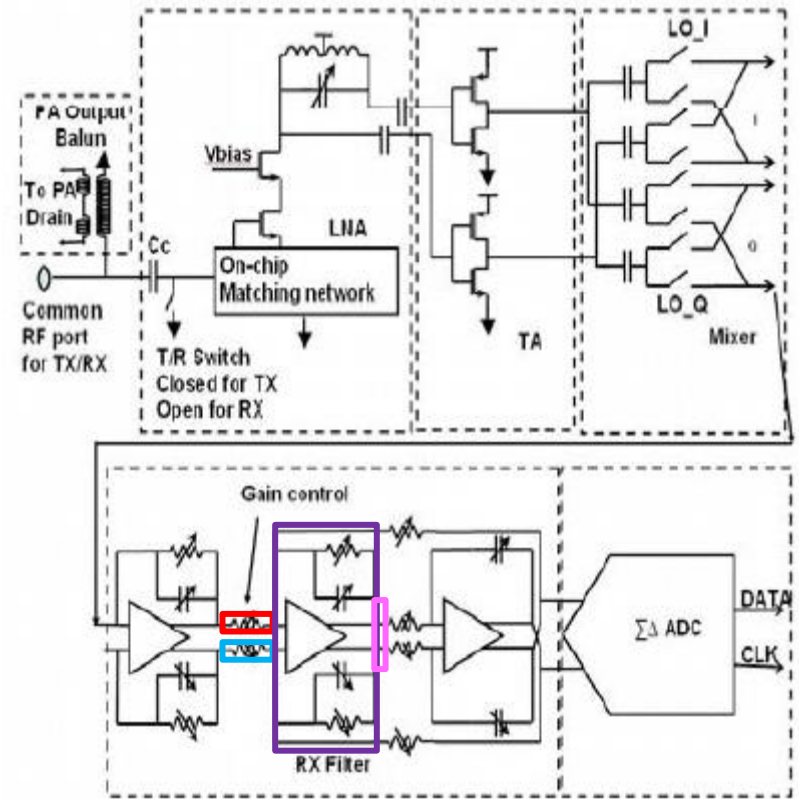 Figure 19.1.4 of 2013 IEEE paper.

The differential amplifier circuit (purple box) receives two inputs, down-converted quadrature-phase signal portion (red box) and down-converted inverted quadrature-phase signal portion (blue box), and outputs a second channel down-converted differential in-phase signal (e.g., shown in the pink box), which is a function of the difference between the inputs. In particular, differential amplifier circuit combines the first down-converted signal portion (red box) with the second down-converted signal portion (blue box) and outputs a second channel down-converted signal (e.g., shown in the pink box) that is a function of the combination of the first and second down-converted signal portions.

10.1.2 Differential Signals

Let us return to the circuit of Fig. 10.2(a) and recall that the duplicate stage consisting of Q_2 and R_{C2} remains "idle," thereby "wasting" current. We may therefore wonder if this stage can provide signal amplification in addition to establishing a reference point for V_{out}. In our first attempt, we directly apply the input signal to the base of Q_2 [Fig. 10.3(a)]. Unfortunately, the signal components at X and Y are in phase, canceling each other as they appear in $v_X - v_Y$:

$$v_X = A_v v_{in} + v_\psi \tag{10.5}$$

$$v_Y = A_v v_{in} + v_\psi \tag{10.6}$$

$$\Rightarrow v_X - v_Y = 0. \tag{10.7}$$

For the signal components to *enhance* each other at the output, we can *invert* one of the input phases as shown in Fig. 10.3(b), obtaining

$$v_X = A_v v_{in} + v_\psi \tag{10.8}$$

$$v_Y = -A_v v_{in} + v_\psi \tag{10.9}$$

and hence

$$v_X - v_Y = 2A_v v_{in}. \tag{10.10}$$

B. Razavi, *Fundamentals of Microelectronics* at p. 439

46

Energy, power, current, voltage, resistance/impedance, and time relationships can be expressed as follows:

Energy Power Current Voltage Resistance Impedance Time Relationships

$$E = \left(\frac{J}{\Delta t}\right) \cdot \Delta t$$

$$P = \left(\frac{J}{\Delta t}\right)$$

$$E = P \cdot \Delta t$$

Where:

E is Energy in Joules
P is Power in Watts*
t is Time in Seconds
I is Current in Amperes
V is Voltage in Volts
R is Resistance or Impedance (Z) in Ohms

*Power is the rate of energy transfer

$$P = V \cdot I \qquad P = \left(\frac{V^2}{R}\right) \qquad P = I^2 \cdot R$$

$$E = V \cdot I \cdot \Delta t \qquad E = \left(\frac{V^2}{R}\right) \cdot \Delta t \qquad E = I^2 \cdot R \cdot \Delta t$$

$$V = \left(\frac{E}{I \cdot \Delta t}\right) \qquad V = \sqrt{\left(\frac{E \cdot R}{\Delta t}\right)} \qquad I = \sqrt{\left(\frac{E}{R \cdot \Delta t}\right)}$$

$$I = \left(\frac{E}{V \cdot \Delta t}\right)$$

47

Alternatively, each TI Chip includes a second differential amplifier circuit (e.g., differential amplifier circuit including operational amplifier (op-amp), shown in the purple box) that combines the down-converted quadrature-phase signal portion (e.g., shown in the red box) with the inverted quadrature-phase signal portion (e.g., shown in the blue box) and outputs a second channel down-converted differential quadrature-phase signal (e.g., shown in the pink box).

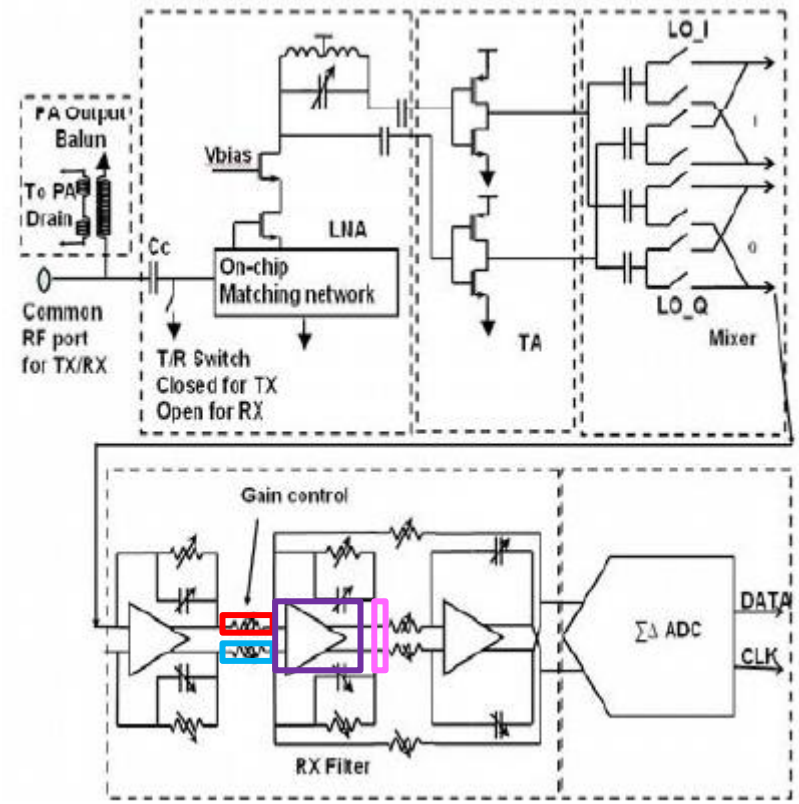

Figure 19.1.4 of 2013 IEEE paper.

48

Alternatively, each TI Chip includes a second differential amplifier circuit (e.g., differential amplifier circuit including operational amplifier (op-amp) with parallel resistor-capacitor feedback, shown in the purple box) that combines the down-converted quadrature-phase signal portion (e.g., shown in the red box) with the inverted quadrature-phase signal portion (e.g., shown in the blue box) and outputs a second channel down-converted differential quadrature-phase signal (e.g., shown in the pink box).

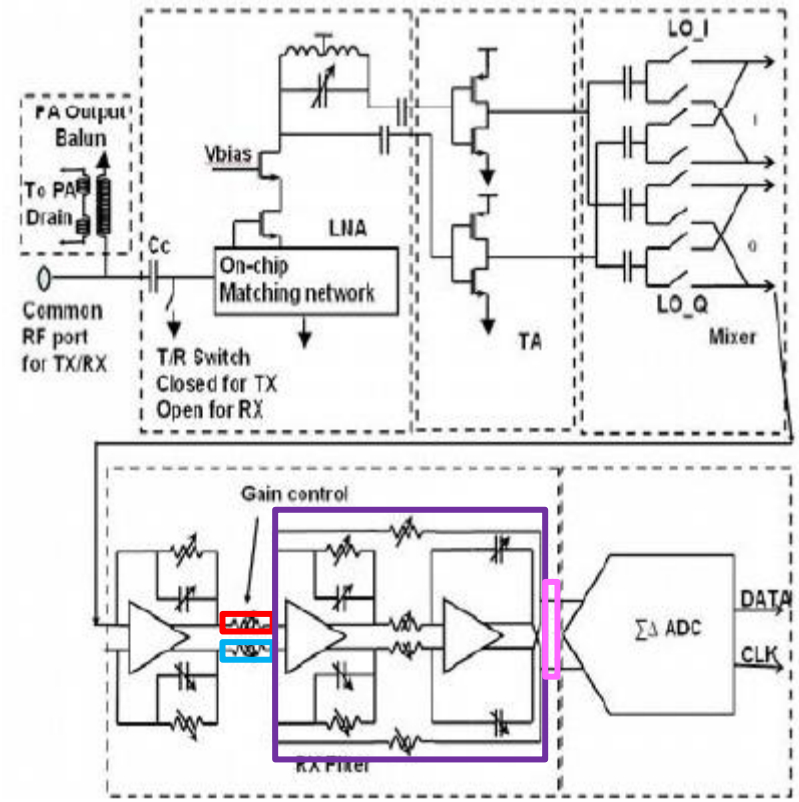

Figure 19.1.4 of 2013 IEEE paper.

49

Claim 20	TI Chips
The system of claim 19, wherein said modulated carrier signal includes an amplitude variation.	Each TI Chip is/includes a system wherein the modulated carrier signal (e.g., RF) includes an amplitude variation. *See* claim 2.
Claim 21	**TI Chips**
The system of claim 19, wherein said modulated carrier signal includes a phase variation.	Each TI Chip is/includes a system wherein the modulated carrier signal (e.g., RF) includes a phase variation. *See* claim 2.
Claim 22	**TI Chips**
The system of claim 19, wherein said modulated carrier signal includes a combination of amplitude variation and phase variation.	Each TI Chip is/includes a system wherein the modulated carrier signal (e.g., RF) includes a combination of amplitude variation and phase variation. *See* claim 2.

50

Claim 23	TI Chips
The system of claim 19, wherein the third switch is on for less than one-half cycle of the modulated carrier signal.	Each TI Chip is/includes a system wherein the third switch (e.g., switch S5) is on for less than one-half cycle of the modulated carrier signal (e.g., RF). Switch S5 (purple box) includes transistors that operate as a switch with switching frequency and duty cycles controlled by LO_Q+ (orange box). In particular, switch S5 (purple box) periodically opens and closes, thereby controlling the current flow of RF (red path) in the circuit. The time period for which switch S5 (purple box) is open/closed is determined by control signal LO_Q+ (orange box). Specifically, control signal LO_Q+ (orange box) enables (i.e., closes) switch S5 (purple box) during an aperture thereof. An aperture describes the pulse width of the control signal (i.e., the length of activation within the signal) when the switch is closed. The diagram below represents an exemplary waveform of control signal LO_Q+. 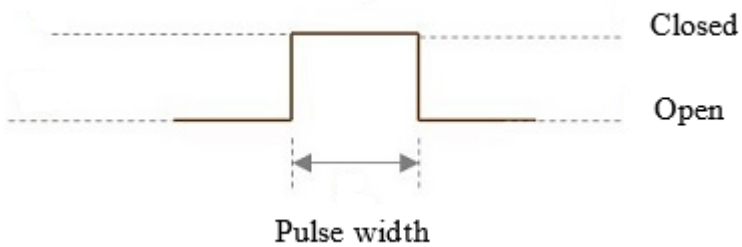 An aperture of the control signal (e.g., LO_Q+) therefore possesses a time duration or duty cycle with respect to an LO rate. The duty cycle of the aperture controlled by the control signal (e.g., LO_Q+) is the percentage of time during a cycle in the switch is closed. On information and belief, the frequency of control signal LO_Q+ is substantially similar to the frequency of the RF signal. On information and belief, the control signal (e.g., LO_Q+) has a sampling aperture with a nominal 25% duty cycle. *See* N. Klemmer et al., "A 45nm CMOS RF-to-Bits LTE/WCDMA FDD/TDD 2×2 MIMO Base-Station Transceiver SoC with 200MHz RF Bandwidth," in *IEEE Int. Solid-State Circuits Conf. (ISSCC) Dig. Tech. Papers*, 2016, pp. 164-165; N. Klemmer (2016, February 2). *A 45nm CMOS RF-to-Bits LTE/WCDMA FDD/TDD 2×2 MIMO Base Station Transceiver SoC with 200MHz RF Bandwidth* [PowerPoint]. ISSCC, San Francisco, CA, USA; C. Yeh et al., "Multi-band, Multi-mode, Low-power CMOS Receiver Front-end for Sub-GHz ISM/SRD Band with Narrow Channel Spacing," *Proceedings of the IEEE 2012 Custom Integrated Circuits Conference*, San Jose, CA, USA, 2012, pp. 1-4. Accordingly, switch S5 is on for less than one-half cycle of RF.

51

Claim 26	TI Chips
The system of claim 19, wherein the third and fourth control signals each control a charging and discharging cycle of their respective third and fourth energy storage element by respectively controlling the third and fourth switching devices so that for each third and fourth switching device a portion of energy that is distinguishable from noise is transferred to the respective third and fourth storage element when the respective switch is on during the charging cycle, and a portion of the transferred energy is discharged during the discharging part of the cycle for each respective third and fourth switching device when the respective switching device is off.	Each TI Chip is/includes a system wherein the third and fourth control signals (e.g., LO_Q+, LO_Q-, respectively) each control a charging and discharging cycle of their respective energy storage element (e.g., capacitors C3, C4, respectively) by respectively controlling the third and fourth switching devices (e.g., switch S5, switch S6, respectively) so that for each switching device the portion of energy that is distinguishable from noise is transferred to the respective storage element when the switch is on during the charging cycle, and a portion of the transferred energy is discharged during the discharging part of the cycle for each respective switching device when the switching device is off. As explained above, the recursive closing/opening of the switch S5 (purple box) periodically couples the RF signal (red path) to a capacitor C3 (green box) according to control signal LO_Q+ (orange box). During a sampling aperture of control signal LO_Q+, switch S5 closes and energy from the RF signal is directed to capacitor C3 along the purple path. Between each sampling aperture of LO_Q+, switch S5 remains open (i.e., RF signal is prevented from passing through the switch). Accordingly, capacitor C3 discharges a portion of the transferred energy to a load (e.g., feedback resistor(s), yellow box). Likewise, the recursive closing/opening of the switch S6 (purple box) periodically couples the RF signal (red path) to a capacitor C4 (green box) according to control signal LO_Q- (orange box). During a sampling aperture of control signal LO_Q-, switch S6 closes and energy from the RF signal is directed to capacitor C4 along the yellow path. Between each sampling aperture of LO_Q-, switch S6 remains open (i.e., RF signal is prevented from passing through the switch). Accordingly, capacitor C4 discharges a portion of the transferred energy to a load (e.g., feedback resistor(s), yellow box).

52

Claim 27	TI Chips
The system of claim 26, wherein for each respective energy storage element, the energy discharged during any given discharge cycle is not completely discharged, with the remaining undischarged energy from the given discharge cycle becoming an initial condition for the next charging cycle.	Each TI Chip is/includes a system wherein for each respective storage element (e.g., capacitors C3, C4), the energy discharged during any given discharge cycle is not completely discharged, with the remaining undischarged energy from the given discharge cycle becoming an initial condition for the next charging cycle. The third and fourth control signals (e.g., LO_Q+ and LO_Q-, respectively) each control a charging and discharging cycle of their respective energy storage element (e.g., capacitors C3 and C4, respectively) by respectively controlling the third and fourth switching devices (e.g., switch S5, switch S6, respectively) so that for each switching device the portion of energy that is distinguishable from noise is transferred to the respective storage element when the switch is on during the charging cycle, and a portion of the transferred energy is discharged during the discharging part of the cycle for each respective switching device when the switching device is off. The third energy storage element (e.g., capacitorC3) charges when the third switch (switch S5) is closed (“ON”) and partially discharges when the third switch is open (“OFF”). On information and belief, capacitor C3 does not completely discharge after the charging cycle, which means that there is energy available from the previous charging cycle. Thus, the energy discharged by the third energy storage element during any given discharge cycle is not fully discharged with the remaining undischarged energy from the given discharge cycle becoming an initial condition for the next charging cycle of the third energy storage element. Likewise, the fourth energy storage element (e.g., capacitor C4) charges when the fourth switch (switch S6) is closed (“ON”) and partially discharges when the fourth switch is open (“OFF”). On information and belief, capacitor C4 does not completely discharge after the charging cycle, which means that there is energy available from the previous charging cycle. Thus, the energy discharged by the fourth energy storage element during any given discharge cycle is not fully discharged with the remaining undischarged energy from the given discharge cycle becoming an initial condition for the next charging cycle of the fourth energy storage element.

53

Claim 29	TI Chips
The system of claim 19, wherein the frequencies of the third and fourth apertures have periods that are two (2) percent or greater of the modulated carrier signal's period.	On information and belief, each TI Chip is/includes a system wherein the frequencies of the third and fourth apertures have periods that are two (2) percent or greater of the modulated carrier signal's (e.g., RF) period. The period of the modulated carrier signal is defined as the amount of time required to complete one full cycle. An aperture describes the pulse width of the control signal (i.e., the length of activation within the signal) when the switch is closed. The diagram below represents an exemplary waveform of an aperture signal (e.g., LO_Q+, LO_Q-). 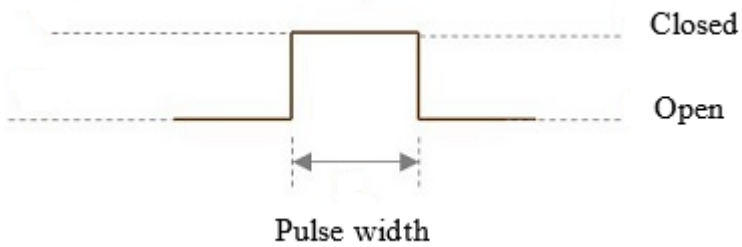 Apertures of the third and fourth control signals (e.g., LO_Q+, LO_Q-) possess a time duration or duty cycle with respect to an LO rate. The duty cycle is the percentage of time during a cycle in which the signal is active (switch is closed). On information and belief, the frequency of the control signals is substantially similar to the frequency of the modulated carrier signal (e.g., RF signal). On information and belief, the control signals (e.g., LO_Q+, LO_Q-) have a sampling aperture with a nominal 25% duty cycle. *See* N. Klemmer et al., "A 45nm CMOS RF-to-Bits LTE/WCDMA FDD/TDD 2×2 MIMO Base-Station Transceiver SoC with 200MHz RF Bandwidth," in *IEEE Int. Solid-State Circuits Conf. (ISSCC) Dig. Tech. Papers*, 2016, pp. 164-165; N. Klemmer (2016, February 2). *A 45nm CMOS RF-to-Bits LTE/WCDMA FDD/TDD 2×2 MIMO Base Station Transceiver SoC with 200MHz RF Bandwidth* [PowerPoint]. ISSCC, San Francisco, CA, USA; C. Yeh et al., "Multi-band, Multi-mode, Low-power CMOS Receiver Front-end for Sub-GHz ISM/SRD Band with Narrow Channel Spacing," *Proceedings of the IEEE 2012 Custom Integrated Circuits Conference*, San Jose, CA, USA, 2012, pp. 1-4. Accordingly, the frequencies of the third and fourth apertures have periods that are two (2) percent or greater of the modulated carrier signal's period.

54

Claim 30	TI Chips
The system of claim 19, wherein the frequencies of the third and fourth apertures have periods that are five (5) percent or greater of the modulated carrier signal's period.	On information and belief, each TI Chip is/includes a system wherein the frequencies of the third and fourth apertures have periods that are five (5) percent or greater of the modulated carrier signal's (e.g., RF) period. *See* claim 29.
Claim 31	**TI Chips**
he system of claim 19, wherein the frequencies of the third and fourth apertures have periods that are ten (10) percent or greater of the modulated carrier signal's period.	On information and belief, each TI Chip is/includes a system wherein the frequencies of the third and fourth apertures have periods that are ten (10) percent or greater of the modulated carrier signal's (e.g., RF) period. *See* claim 29.
Claim 32	**TI Chips**
The system of claim 19, wherein the frequencies of the third and fourth apertures have periods that are twelve and a half (12.5) percent or greater of the modulated carrier signal's period.	On information and belief, each TI Chip is/includes a system wherein the frequencies of the third and fourth apertures have periods that are twelve and a half (12.5) percent or greater of the modulated carrier signal's (e.g., RF) period. *See* claim 29.

55

Claim 33	TI Chips
The system of claim 19, further comprising: a first filter that filters said down-converted in-phase baseband signal portion; a second filter that filters said down-converted inverted in-phase baseband signal portion; a third filter that filters said down-converted quadrature-phase baseband signal portion; a fourth filter that filters said down-converted inverted quadrature-phase baseband signal portion.	Each TI Chip is/includes a system further comprising: a first filter (shown along orange path) that filters the down-converted in-phase signal portion; and a second filter (shown along the blue path) that filters the down-converted inverted in-phase signal portion. 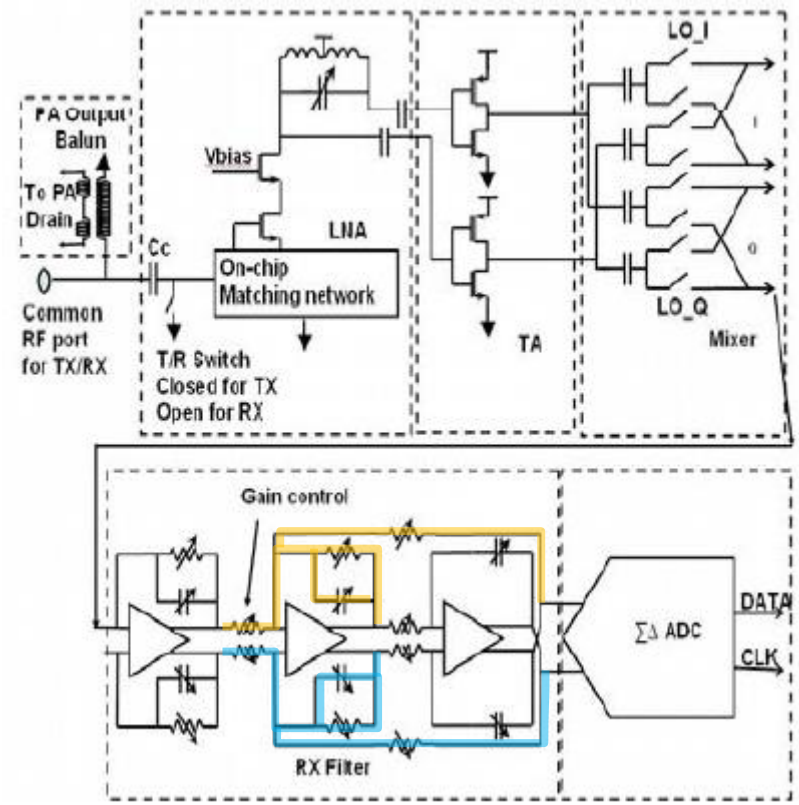 Figure 19.1.4 of 2013 IEEE paper. On information and belief, the first and second filters have the same circuit configuration as the third and fourth filters. As such, each TI Chip also includes a third filter (represented along the orange path) that filters the down-converted quadrature-phase signal portion; and a fourth filter (represented along the blue path) that filters the down-converted inverted quadrature-phase signal portion.

Claim 34	TI Chips
The system of claim 33, wherein the first, second, third, and fourth filters each comprise a low-pass filter.	On information and belief, each TI Chip is/includes a system wherein the first, second, third, and fourth filters each comprise a low-pass filter. *See* claim 33 above.

57

Claim 35	TI Chips
The system of claim 19, wherein said portions of transferred energy from each of the first, second, third and fourth switch which are integrated over time to accumulate said portions of transferred energy are integrated by a separate integration module coupled to the output of each said first, second, third and fourth switch respectively.	Each TI Chip is/includes a system wherein the portions of transferred energy from each of the first and second switch (e.g., switch S1, switch S2, respectively) which are integrated over time to accumulate the portions of transferred energy are integrated by a separate integration module (e.g., capacitor C1, capacitor C2, shown in the green boxes) coupled to the output of each the first and second switch. 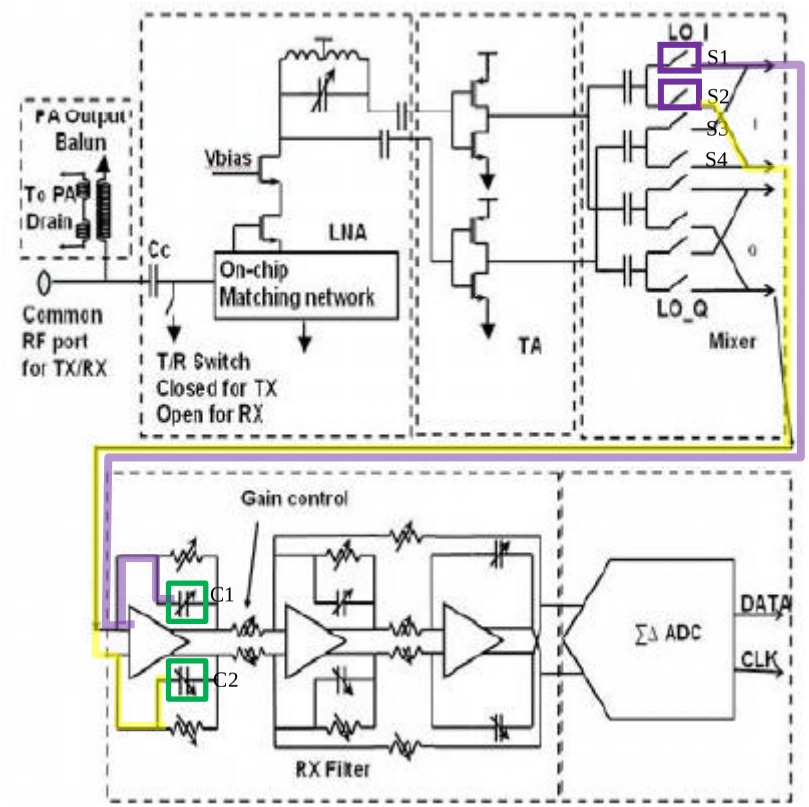 Figure 19.1.4 of 2013 IEEE paper.

58

	The recursive closing/opening of switch S1 (purple box) periodically couples the RF signal to capacitor C1 (green box). During an aperture of LO_I+ (orange box), for example, switch S1 (purple box) closes and energy from RF is directed to capacitor C1 (green box) along the purple path. Likewise, the recursive closing/opening of switch S2 (purple box) periodically couples the RF signal to capacitor C2 (green box). During an aperture of LO_I- (orange box), for example, switch S2 (purple box) closes and energy from RF is directed to capacitor C2 (green box) along the yellow path. Accordingly, capacitors C1, C2 (green boxes) accumulate portions of transferred energy from each of the first and second switch (switch S1, switch S2, respectively), thereby integrating the portion of transferred energy over time.

59

60

Likewise, the portions of transferred energy from each of the third and fourth switch (e.g., switch S5, switch S6, respectively) are integrated over time to accumulate the portions of transferred energy are integrated by a separate integration module (e.g., capacitors C3, capacitors C4, shown in the green boxes) coupled to the output of each the third and fourth switch.

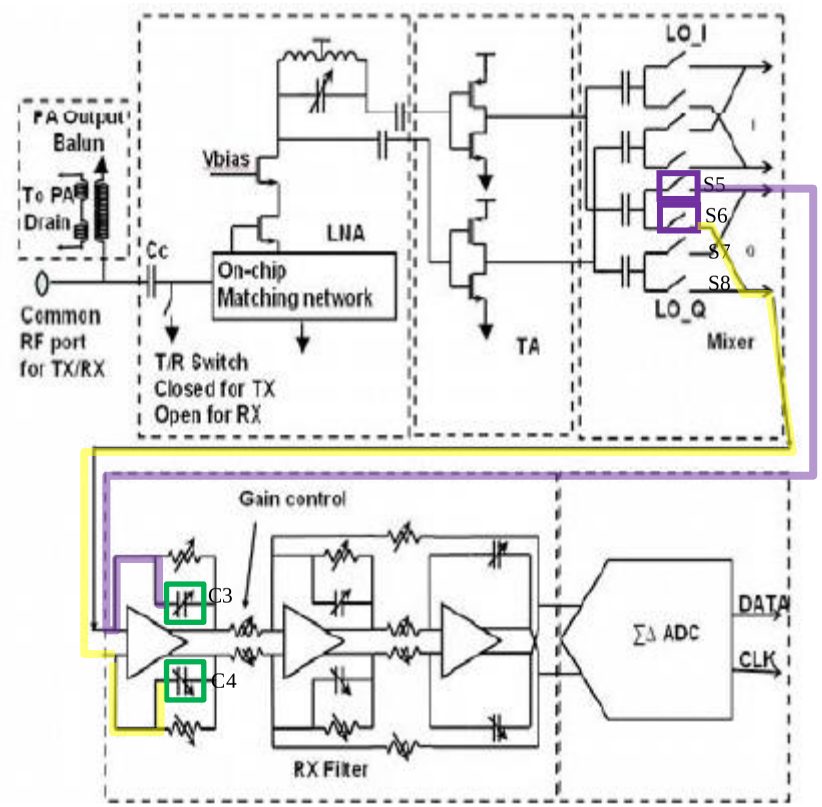

Figure 19.1.4 of 2013 IEEE paper.

	The recursive closing/opening of switch S5 (purple box) periodically couples the RF signal to capacitor C3 (green box). During an aperture of LO_Q+ (orange box), for example, switch S5 (purple box) closes and energy from RF is directed to capacitor C3 (green box) along the purple path. Likewise, the recursive closing/opening of switch S6 (purple box) periodically couples the RF signal to capacitor C4 (green box). During an aperture of LO_Q- (orange box), for example, switch S6 (purple box) closes and energy from RF is directed to capacitor C4 (green box) along the yellow path. Accordingly, capacitors C3, C4 (green boxes) accumulate portions of transferred energy from each of the third and fourth switch (switch S5, switch S6, respectively), thereby integrating the portion of transferred energy over time.

61

Stored Energy

The power delivered to a circuit element is the product of the current and the voltage (provided that the references have the passive configuration):

$$p(t) = v(t)i(t) \tag{3.9}$$

Using Equation 3.3 to substitute for the current, we have

$$p(t) = Cv\frac{dv}{dt} \tag{3.10}$$

Suppose we have a capacitor that initially has $v(t_0) = 0$. Then the initial stored electrical energy is zero, and we say that the capacitor is uncharged. Furthermore, suppose that between time t_0 and some later time t the voltage changes from 0 to $v(t)$ volts. As the voltage magnitude increases, energy is delivered to the capacitor, where it is stored in the electric field between the plates.

If we integrate the power delivered from t_0 to t, we find the energy delivered:

$$w(t) = \int_{t_0}^{t} p(t)\,dt \tag{3.11}$$

Using Equation 3.10 to substitute for power, we find that

$$w(t) = \int_{t_0}^{t} Cv\frac{dv}{dt}\,dt \tag{3.12}$$

Canceling differential time and changing the limits to the corresponding voltages, we have

$$w(t) = \int_{0}^{v(t)} Cv\,dv \tag{3.13}$$

Integrating and evaluating, we get

$$w(t) = \frac{1}{2}Cv^2(t) \tag{3.14}$$

This represents energy stored in the capacitance that can be returned to the circuit.

See Hambley, *Electrical Engineering Principles and Applications*, 6th Ed., Prentice Hall, 2014, p. 129 -130.

62

Claim 36	TI Chips
The system of claim 19, wherein said first, second, third and fourth storage elements are capacitive storage circuits, and wherein said portions of transferred energy from each of the first, second, third and fourth switch which are integrated over time to accumulate said portions of transferred energy are integrated by the capacitive storage circuits of the respective first, second, third and fourth storage elements as they accumulate charge during successive sampling apertures.	Each TI Chip is/includes a system wherein the first, second, third, and fourth storage elements (e.g., capacitors C1, C2, C3, C4, respectively) are capacitive storage circuits, and wherein the portions of transferred energy from each of the first, second, third and fourth switch which are integrated over time to accumulate the portions of transferred energy are integrated by the capacitive storage circuits of the respective first, second, third and fourth storage elements as they accumulate charge during successive sampling apertures. *See* claim 35.

63