UNITED STATES DISTRICT COURT
WESTERN DISTRICT OF TEXAS
WACO DIVISION

PARKERVISION, INC., Plaintiff, **v.** **REALTEK SEMICONDUCTOR CORP.,** Defendant.	**Case No. 6:23-cv-00374** **JURY TRIAL DEMANDED**

COMPLAINT FOR PATENT INFRINGEMENT

Plaintiff ParkerVision, Inc. ("ParkerVision"), by and through its undersigned counsel, files this Complaint against Defendant Realtek Semiconductor Corp. ("Realtek" or "Defendant") for patent infringement of United States Patent Nos. 6,879,817; 7,865,177; and 9,118,528 (the "patents-in-suit") and alleges as follows:

NATURE OF THE ACTION

1. This is an action for patent infringement arising under the patent laws of the United States, 35 U.S.C. §§ 1 *et seq*.

PARTIES

2. Plaintiff ParkerVision is a Florida corporation with its principal place of business at 4446-1A Hendricks Avenue, Suite 354, Jacksonville, Florida 32207.

3. On information and belief, Realtek is a foreign corporation organized and existing under the laws of Taiwan with a place of business located at No. 2, Innovation Road II, Hsinchu Science Park, Hsinchu 300, Taiwan.

4. According to Realtek, "Realtek Semiconductor Corporation is a world-leading IC provider that designs and develops a wide range of IC products for connected media, communications network, computer peripheral, and multimedia applications." https://www.realtek.com/en/press-room/news-releases/item/realtek-to-announce-full-range-of-communications-network-multimedia-and-consumer-electronics-solutions-at-2022-ces.

Operations Overview

I. Business Overview
1. Business Scope
(1) Realtek's Main Business Areas
i. Research, development, production, manufacturing, and the sale of various types of integrated circuits
ii. Software and hardware application design, testing, repairs, and technical consultations for various types of integrated circuits
iii. Research, development, and the sale of various types of silicon intellectual property
iv. Adjunct trade and sales that relate to Realtek's core businesses

https://www.realtek.com/images/ar/-2021__20220518.pdf at page 69.

5. Moreover, according to Realtek, "Realtek Semiconductor Corporation . . . was incorporated on October 21, 1987, and debuted on the Taiwan Stock Exchange in October 1998. It is headquartered in Taiwan and it ***has sales or R&D teams in*** China, Singapore, the ***United States***, Japan, and South Korea." https://www.realtek.com/images/ar/-2021__20220518.pdf at page 4.

6. In Realtek's 2021 Annual Report, Realtek lists wholly owned affiliates that are registered in the United States.

Company Name	Date of Incorporation	Place of Registration	Paid-in Capital	Main Business Activities
Cortina Access, Inc.	2015.04	United States	US$16,892	R&D and information services
Ubilinx Technology Inc.	2016.08	United States	US$60,000,000	R&D and information services

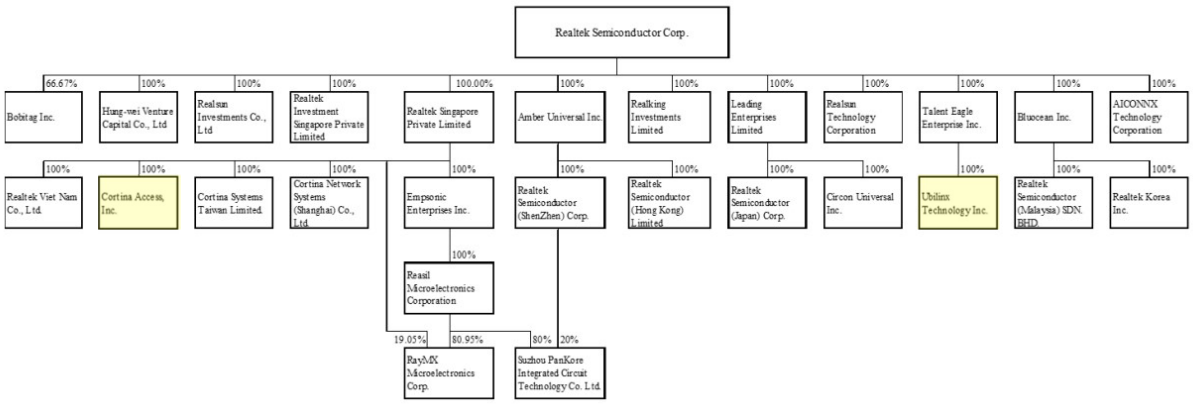

https://www.realtek.com/images/ar/-2021__20220518.pdf at pages 107-108.

7. On information and belief, Realtek has designed, manufactured, and sold Realtek Wi-Fi/802.11/Bluetooth chips ("Wi-Fi chips") that are found in products sold in the United States. https://www.realtek.com/images/ar/-2021__20220518.pdf at pages 70, 84; https://www.realtek.com/images/ar/-__.pdf at pages 67, 70, 79-80.

8. On information and belief, Realtek sells Wi-Fi chips to its customers knowing those chips will be incorporated into products imported and/or sold in the United States.

9. For example, on information and belief, Realtek provides its customers with Wi-Fi chips for televisions to be sold in the United States.

> In the consumer market, the TV market generally moves with the epidemic and market fluctuations. High-end TVs maintain high-spec Wi-Fi, but require cost support. Customers with low-end specifications are faced with low gross profit that cannot cover the cost of sales, and are forced to adjust the specifications to Wi-Fi 4 1x1 single Wi-Fi. In order to simultaneously defend against market competition and enhance customers' hitherto low-end TV specifications, Realtek guides customers to move to a 1x1 combo or 2x2 with better cost-performance specifications, and upgrade W-Fi 4 1x1+BT from single-band to dual-band. In 2021, due to the limited supply of Wi-Fi 5 in the Chinese market, the set-top box was downgraded to models without Wi-Fi. However, the Chinese operator market is expected to start introducing Wi-Fi 6 models in the third quarter of 2022. Major telecom operators have added Wi-Fi 6 models to their set-top box tenders, and are expected to gradually upgrade the specifications of existing tenders.

https://www.realtek.com/images/ar/-2021__20220518.pdf at page 78.

10. Realtek Wi-Fi chips are found in televisions sold in the United States including by TCL, Hisense, and LG.

11. For example, the Realtek RTL8812BU is found in TCL television model no. 43S425.

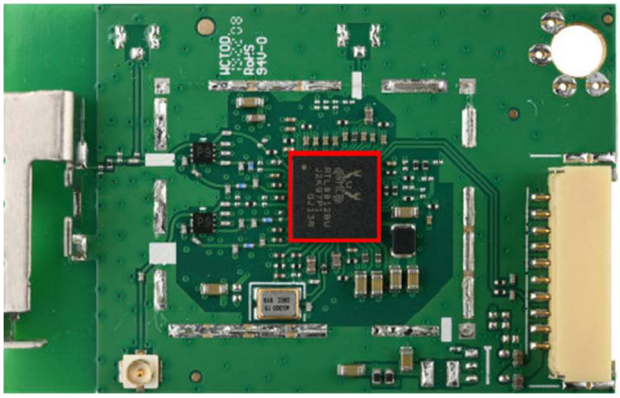

12. On information and belief, Realtek's RTL8812BU chip is found in other TCL televisions sold in the United States including, without limitation, the television models shown below.

TV Model No.	FCC ID
65S427	W8U65S427
43S423	W8U43S423
55S426	W8U55S426
75Q825	W8U75Q825
65R625	W8U65R625
55S427	W8U55S427
55R625	W8U55R625
43S525	W8U43S525
65S525	W8U65S525
55S525	W8U55S525
55S423	W8U55S423
43S421	W8U43S421
50S525	W8U50S525
50S423	W8U50S423
65S423	W8U65S423
75S425	W8U75S425
75R615	W8U75R615
32S301	W8U32S301
55S421	W8U55S421
32S325	W8U32S325

49S325	W8U49S325
43S325	W8U43S325
40S325	W8U40S325
32S327	W8U32S327
32S425	W8U43S425
50S425	W8U50S425
49S425	W8U49S425
32S321	W8U32S321
65S425	W8U65S425
55S425	W8U55S425
49S403	W8U49S403
65S401	W8U65S401
43S403	W8U43S403
55S401	W8U55S401
65S517	W8U65S517
55S517	W8U55S517
65R613	W8U65R613
55R613	W8U55R613
49S517	W8U49S517
43S517	W8U43S517
75C807	W8U75C807
49S303	W8U49S303
43S303	W8U43S303
40S303	W8U40S303
28S303	W8U28S303
32S303	W8U32S303
55C807	W8U55C807
65C807	W8U65C807

13. On information and belief, the LG model LGSWFAC81 wireless module, which is identified by the FCC ID number BEJLGSWFAC81, includes Realtek's RTL8812BU chip.

Arcadyan Technology		
Reg. Date : 2017.09.01	**SPECIFICATION**	
Rev. No. : 1.0	MODEL NAME: **LGSWFAC81**	

1. Electrical Specifications

1. Features

LGSWFAC81 is the small size and low power module for IEEE 802.11ac wireless LAN.

LGSWFAC81 is based on Realtek RTL8812BU solution.

- IEEE 802.11 a/b/g/n/ac Dual Band WLAN infrastructure

https://fccid.io/BEJLGSWFAC81/Users-Manual/Users-Manual-3587629.

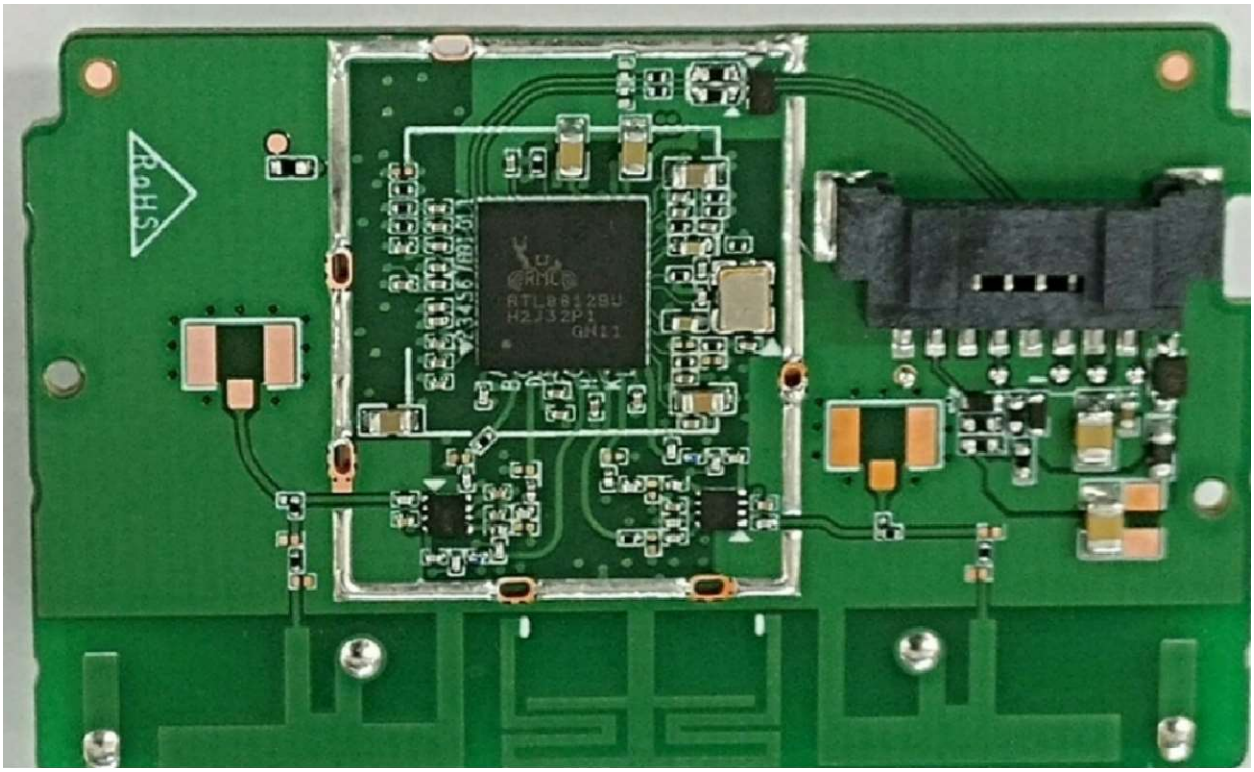

https://fccid.io/BEJLGSWFAC81/Internal-Photos/Internal-Photos-3585492.

14. On information and belief, the following LG television models contain the LGSWFAC81 module and Realtek's RTL8812BU chip: 43UM6900PUA, 49UM6900PUA, 55UM6900PUA, 65UM6900PUA, 43UM6950DUB, 49UM6950DUB, 55UM6950DUB,

60UM6900PUA, 60UM6950DUB, 65UM6950DUB, 55UM6910PUC, 49LK5700PUA, 49LK5700BUA, 43LK5700PUA, 43LK5700BUA, 32LK610PUA.

15. On information and belief, Hisense televisions include modules (e.g., PPQ-WN4519L) containing Realtek Wi-Fi chips. On information and belief, the PPQ-WN4519L module includes Realtek's RTL8812BU chip.

https://fccid.io/PPQ-WN4519L/Interna-Photos/Internal-Photos-3283972.

16. On information and belief, the following Hisense television models contain the PPQ-WN4519L module and Realtek's RTL8812BU chip:

FCC ID	TV Model No(s).
W9HLCDF0123	65R6D, 65R6D+, 65R6+0D, 65R6+0D1, 65R60+0D2, 65R6+0D2, 65R60+0D, 65R60+0D1, 65R6DM, 65R6607, 65R6107, 65DU64+0
W9HLCDF0121	55R60+0D2, 55R6D+, 55R6+0D, 55R6+0D1, 55R6+0D2, 55R60+0D, 55R60+0D1, 55R6D, 55R6DM, 55R6607, 55R6107 55DU64+0

17. On information and belief, Realtek sells and/or offers to sell Wi-Fi chips to United States customers (e.g., HP Inc.) for incorporating into devices e.g. laptop computers. *See, e.g.,* https://fccid.io/B94RTL; https://support.hp.com/us-en/document/c06624389. On information and belief, Realtek provides technical support for United States customers to incorporate Realtek Wi-Fi chips into devices.

18. On information and belief, at CES 2020 and 2022 in Las Vegas, Nevada, Realtek exhibited and demonstrated a number of products containing Realtek Wi-Fi chips. https://www.realtek.com/en/press-room/news-releases/item/realtek-to-demonstrate-full-range-of-connectivity-multimedia-and-consumer-electronics-solutions-at-2020-ces; https://www.realtek.com/en/press-room/news-releases/item/realtek-to-announce-full-range-of-communications-network-multimedia-and-consumer-electronics-solutions-at-2022-ces. On information and belief, Realtek (or those acting on its behalf) imported these products into the United States.

JURISDICTION AND VENUE

19. This Court has jurisdiction over the subject matter of this action pursuant to 28 U.S.C. §§ 1331 and 1338(a) because the action arises under the patent laws of the United States, 35 U.S.C. §§ 1 *et seq*.

20. Realtek is subject to this Court's personal jurisdiction in accordance with due process and/or the Texas Long-Arm Statute. *See* Tex. Civ. Prac. & Rem. Code §§ 17.041 *et seq*.

21. This Court has personal jurisdiction over Realtek because Realtek has sufficient minimum contacts with this forum as a result of business conducted within the State of Texas and this judicial district. In particular, this Court has personal jurisdiction over Realtek because, *inter alia*, Realtek, on information and belief, has substantial, continuous, and systematic

business contacts in this judicial district, and derives substantial revenue from goods provided to individuals in this judicial district.

22. Realtek has purposefully availed itself of the privileges of conducting business within this judicial district, has established sufficient minimum contacts with this judicial district such that it should reasonably and fairly anticipate being hauled into court in this judicial district, has purposefully directed activities at residents of this judicial district, and at least a portion of the patent infringement claims alleged in this Complaint arise out of or are related to one or more of the foregoing activities.

23. This Court has personal jurisdiction over Realtek because Realtek (directly and/or through its subsidiaries, affiliates, intermediaries, or customers) has committed and continues to commit acts of infringement in this judicial district in violation of at least 35 U.S.C. § 271(a). In particular, on information and belief, Realtek (directly and/or through its subsidiaries, affiliates, intermediaries, or customers) uses, sells, offers for sale, imports, advertises, and/or otherwise promotes infringing products (receiver, transmitter, and/or transceiver integrated circuits (e.g., chips for use in wireless devices)) in the United States, the State of Texas, and this judicial district. The infringing products include, without limitation, the Realtek RTL8812BU ("Realtek Chips").

24. On information and belief, Realtek provides instructions to its customers regarding applications (e.g., television and Wi-Fi products) for using the Realtek Chips including, without limitation, through Realtek's website. *See e.g.,* https://www.realtek.com/en/products/communications-network-ics/item/rtl8812bu; https://www.realtek.com/en/component/zoo/category/rtl8812bu-software.

25. Realtek Chips can be found in products sold or offered for sale throughout the United States, the State of Texas, and this judicial district.

26. United States consumers can purchase TCL televisions containing Realtek Chips at brick-and-mortar stores located in this judicial district. For example, and as illustrated below, consumers can order TCL televisions, including the TCL TV Model No. 40S325 (which includes the RTL8812BU) (indicated by the yellow box (below)), for in-store pickup at the Best Buy in Waco, Texas (indicated by the red box (below)).

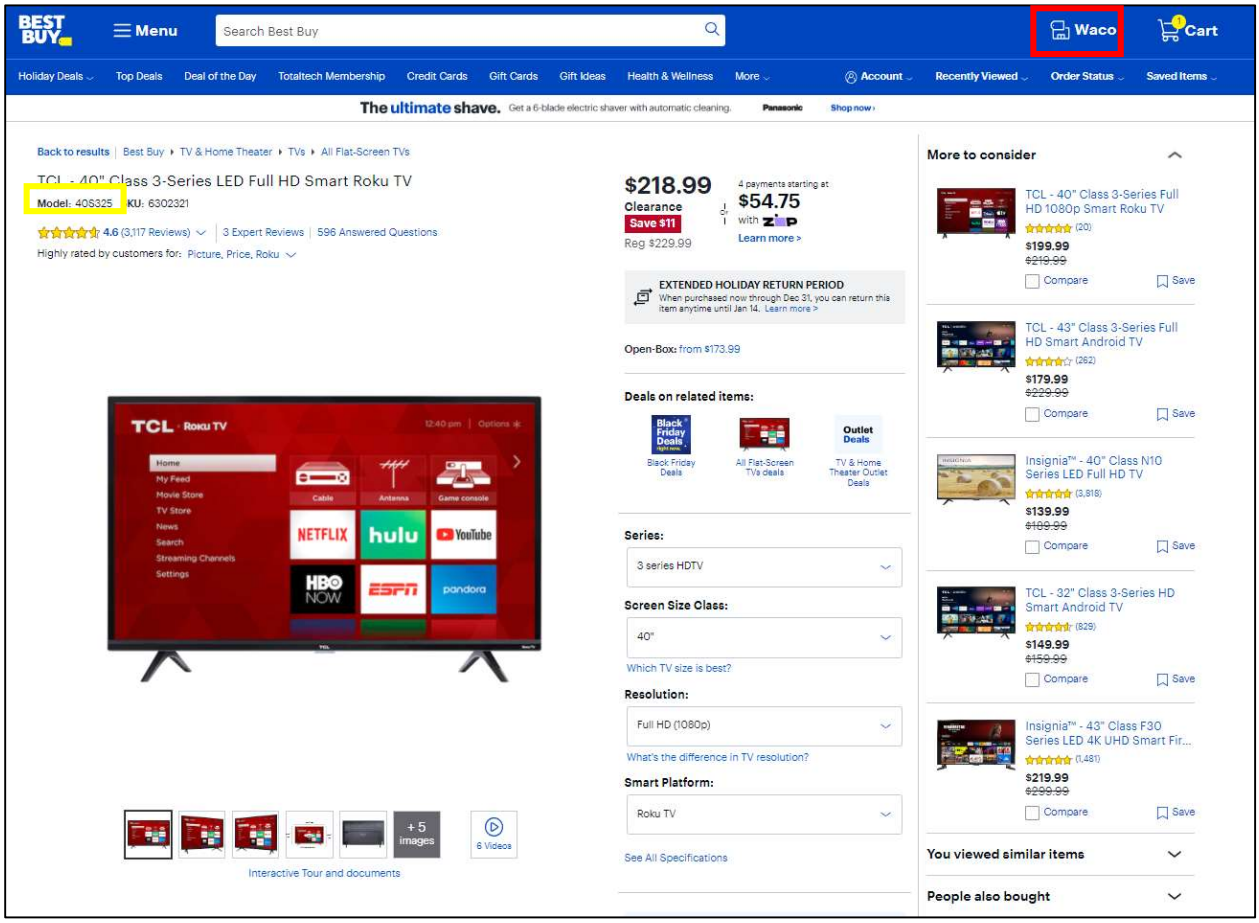

https://www.bestbuy.com/site/tcl-40-class-3-series-led-full-hd-smart-roku-tv/6302321.p?skuId=6302321.

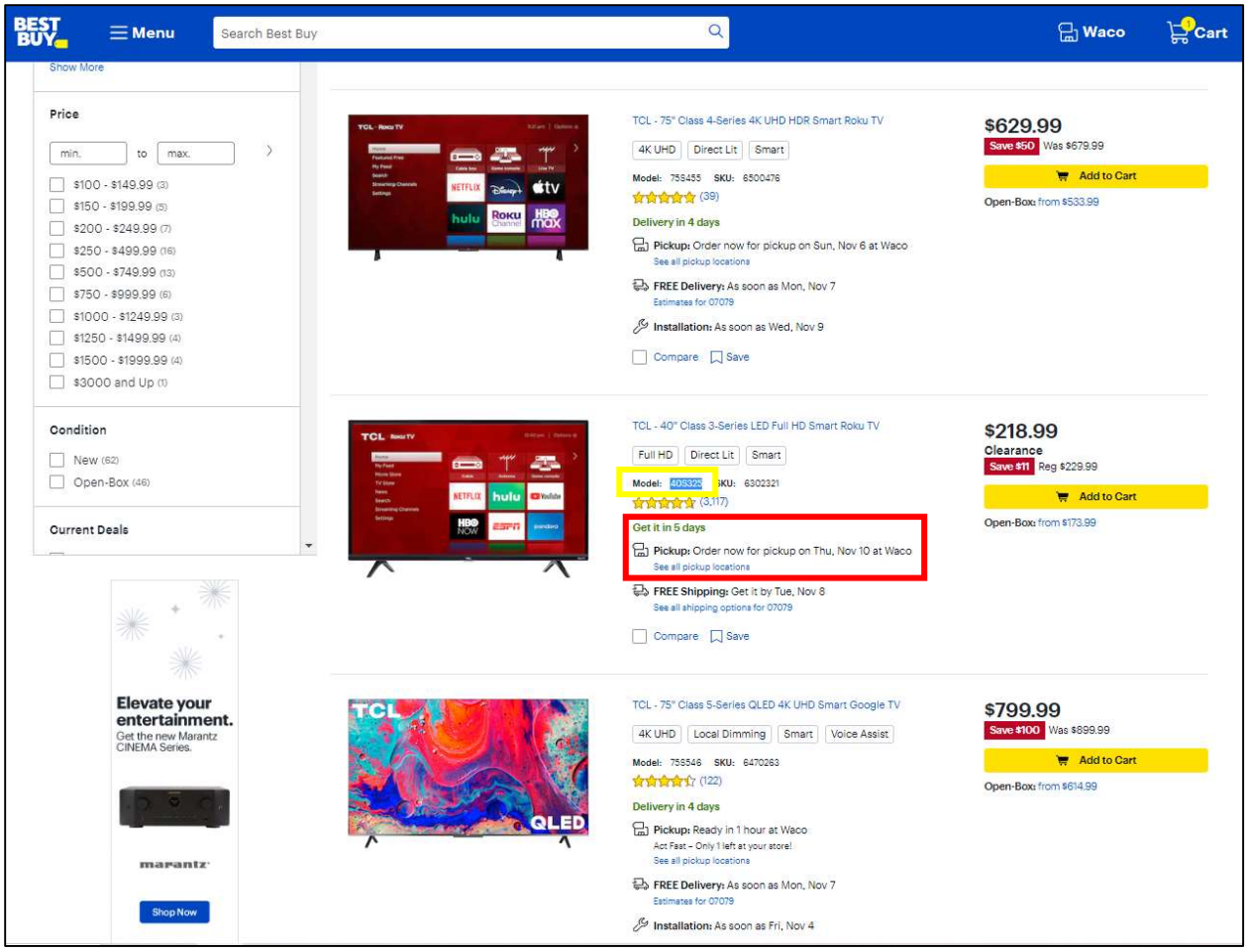

https://www.bestbuy.com/site/searchpage.jsp?_dyncharset=UTF-8&browsedCategory=pcmcat1526935930973&cp=2&id=pcat17071&iht=n&ks=960&list=y&sc=Global&st=pcmcat1526935930973_categoryid%24abcat0101001&type=page&usc=All%20Categories.

27. On information and belief, Realtek knew or should have known that its chips would be incorporated into products (such as the televisions identified above) that would be used, sold, offered for sale, and/or imported in the United States, the State of Texas, and this judicial district. Realtek intended that its products be sold in the United States and affirmatively directed its products to the United States market including, without limitation, through its

customers and distributors. *See, e.g.*, https://www.realtek.com/en/contact-us-en/cu-3-en-2/category/42-12-en-3.

28. On information and belief, Realtek targets the United States market and has purposefully availed itself of doing business in the United States. On information and belief, Realtek conducts business with U.S. companies for the purpose of incorporating its products into products sold in the United States, has sought authorization from the FCC to sell its products in the United States (including, without limitation, the Realtek Chips – see https://fccid.io/TX2), and has presented products for sale and distribution in the United States at the Consumer Electronics Show in Nevada.

29. This case is related to at least the following cases before this Court and involves a common patent/technology: *ParkerVision, Inc. v. TCL Industries Holdings Co., Ltd., et al.*, 6:20-cv-00945 (W.D. Tex.), and *ParkerVision, Inc. v. LG Electronics, Inc.* 6:21-cv-00520 (W.D. Tex.). This case is also related to at least the following case before this Court and involves common parties and products: *ParkerVision, Inc. v. Realtek Semiconductor Corp.*, 6:22-cv-01162 (W.D. Tex.).

30. Realtek has been involved in a number of litigations in this judicial district including against Bandspeed, LLC; Rock Creek Networks, LLC; and Future Link Systems, LLC.

31. Venue is proper in this judicial district under 28 U.S.C. §§ 1391(b)-(d) and/or 1400(b) at least because Realtek is a foreign corporation subject to personal jurisdiction in this judicial district and has committed acts of infringement within this judicial district giving rise to this action.

PARKERVISION

32. In 1989, Jeff Parker and David Sorrells started ParkerVision in Jacksonville, Florida. Through the mid-1990s, ParkerVision focused on developing commercial video cameras, e.g., for television broadcasts. The cameras used radio frequency (RF) technology to automatically track the camera's subject.

33. When developing a consumer version of these video cameras, however, ParkerVision, encountered a problem – the power and battery requirements for RF communications made a cost effective, consumer-sized product impractical. So, Mr. Sorrells and ParkerVision's engineering team began researching ways to solve this problem.

34. At the time, a decade's-old RF transceiver technology called super-heterodyne dominated the consumer products industry. But this technology was not without its own problems – the circuity was large, expensive, and required significant power.

35. From 1995 through 1998, ParkerVision engineers developed an innovative method of RF direct conversion by a process of sampling an RF carrier signal and transferring energy to create a down-converted baseband signal.

36. After creating prototype chips and conducting tests, ParkerVision soon realized that its technology led to improved RF receiver performance, lower power consumption, reduced size and integration benefits. In other words, RF receivers could be built smaller, cheaper and with greater improved performance.

37. ParkerVision's innovations did not stop there. ParkerVision went on to develop additional RF direct down-conversion technologies, RF direct up-conversion technologies and other related direct-conversion technologies. ParkerVision also developed complementary wireless communications technologies that involved interactions, processes, and controls

between the baseband processor and the transceiver, which improved and enhanced the operation of transceivers that incorporate ParkerVision's down-converter and up-converter technologies. To date, ParkerVision has been granted over 200 patents related to its innovations, including the patents-in-suit.

38. ParkerVision's technology helped make many of today's wireless devices a reality by enabling RF chips used in these devices to be smaller, cheaper, and more efficient, and with higher performance.

39. ParkerVision sold products. To the extent ParkerVision products needed to be marked with a ParkerVision patent number, ParkerVision marked those products in compliance with 35 U.S.C. § 287.

THE ASSERTED PATENTS

United States Patent No. 6,879,817

40. On April 12, 2005, the United States Patent and Trademark Office duly and legally issued United States Patent No. 6,879,817 ("the '817 patent") entitled "DC Offset, Re-Radiation, and I/Q Solutions Using Universal Frequency Translation Technology" to inventor David F. Sorrells et al.

41. The '817 patent is presumed valid under 35 U.S.C. § 282.

42. ParkerVision owns all rights, title, and interest in the '817 patent.

United States Patent No. 7,865,177

43. On January 4, 2011, the United States Patent and Trademark Office duly and legally issued United States Patent No. 7,865,177 ("the '177 patent") entitled "Method and System for Down-Converting An Electromagnetic Signal, And Transforms For Same, And Aperture Relationships" to inventor David F. Sorrells et al.

44. The '177 patent is presumed valid under 35 U.S.C. § 282.

45. ParkerVision owns all rights, title, and interest in the ’177 patent.

United States Patent No. 9,118,528

46. On August 25, 2015, the United States Patent and Trademark Office duly and legally issued United States Patent No. 9,118,528 (“the ’528 patent”) entitled “Method and System for Down-Converting an Electromagnetic Signal, and Transforms for Same, and Aperture Relationships” to inventor David F. Sorrells et al.

47. The ’528 patent is presumed valid under 35 U.S.C. § 282.

48. ParkerVision owns all rights, title, and interest in the ’528 patent.

CLAIMS FOR RELIEF

COUNT I - Infringement of United States Patent No. 6,879,817

49. The allegations set forth above are re-alleged and incorporated by reference as if they were set forth fully here.

50. Realtek and/or others on its behalf (e.g., U.S. distributors) directly infringe (literally and/or under the doctrine of equivalents) the ’817 patent by using, selling, offering for sale, and/or importing in/into the United States products covered by at least claim 15 of the ’817 patent.

51. On information and belief, Realtek products that infringe at least claim 15 of the ’817 patent include, but are not limited to, the Realtek Chips and any other Realtek product that is capable of down-converting a higher-frequency signal to a lower-frequency signal as claimed in the ’817 patent. On information and belief, Realtek uses the Realtek Chips at least by testing or demonstrating the Realtek Chips (or having others do so on its behalf) in the United States.

52. On information and belief, each Realtek Chip is/includes an apparatus for down-converting an electromagnetic signal (e.g., high frequency RF signal) to a lower frequency signal. Each Realtek Chip includes a first frequency down-conversion module (e.g., a

transistor(s), capacitor(s), and low impedance load (e.g., one or more resistors)) that receives an input signal (e.g., RF signal), wherein the first frequency down-conversion module down-converts the input signal according to a first control signal (e.g., a local oscillator (LO) signal) and outputs a first down-converted signal (e.g., a baseband signal).

53. On information and belief, each Realtek Chip includes a second frequency down-conversion module (e.g., a transistor(s), capacitor(s), and low impedance load (e.g., one or more resistors)) that receives the input signal (e.g., RF signal), wherein the second frequency down-conversion module down-converts the input signal according to a second control signal (e.g., an LO signal) and outputs a second down-converted signal (e.g., a baseband signal).

54. On information and belief, each Realtek Chip includes a subtractor module (e.g., a differential amplifier circuit) that subtracts the second down-converted signal from the first down-converted signal and outputs a channel down-converted signal.

55. On information and belief, each Realtek Chip includes a third frequency down-conversion module (e.g., a transistor(s), capacitor(s), and low impedance load (e.g., one or more resistors)) that receives the input signal (e.g., RF signal), wherein the third frequency down-conversion module down-converts the input signal according to a third control signal (e.g., an LO signal) and outputs a third down-converted signal (e.g., a baseband signal).

56. On information and belief, each Realtek Chip includes a fourth frequency down-conversion module (e.g., a transistor(s), capacitor(s), and low impedance load (e.g., one or more resistors)) that receives the input signal (e.g., RF signal), wherein the fourth frequency down-conversion module down-converts the input signal according to a fourth control signal (e.g., an LO signal) and outputs a fourth down-converted signal (e.g., a baseband signal).

57. On information and belief, each Realtek Chip includes a second subtractor module (e.g., a differential amplifier circuit) that subtracts the fourth down-converted signal from the third down-converted signal and outputs a second channel down-converted signal.

58. On information and belief, the input signal (e.g., RF signal) comprises an I/Q modulated signal, wherein the first channel down-converted signal comprises an I-phase information signal portion of the I/Q modulated signal, and wherein the second channel down-converted signal comprises a Q-phase information signal portion of the I/Q modulated signal.

59. On information and belief, the first and the second frequency down-conversion modules of each Realtek Chip each comprise a switch (e.g., one or more transistors) and a storage element (e.g., one or more capacitors), wherein a first node of the switch is coupled to a node of the storage element, and a second node of the switch is coupled to a reference potential (e.g., bias signal).

60. On information and belief, each Realtek Chip meets wireless telecommunication standards including, but not limited to, IEEE 802.11a, 802.11b, 802.11g, 802.11n, and 802.11ac. *See, e.g.,* https://www.realtek.com/en/products/communications-network-ics/item/rtl8812bu.

61. For example, as shown in the exemplary schematic diagram of Realtek's RTL8812BU chip (below), a single receiver path includes the following exemplary circuit components: input signal (red box), LO signal (orange box), switch (transistor(s), shown in the purple box), storage capacitor(s) (green box), and low impedance load (resistor(s), shown in the yellow box).

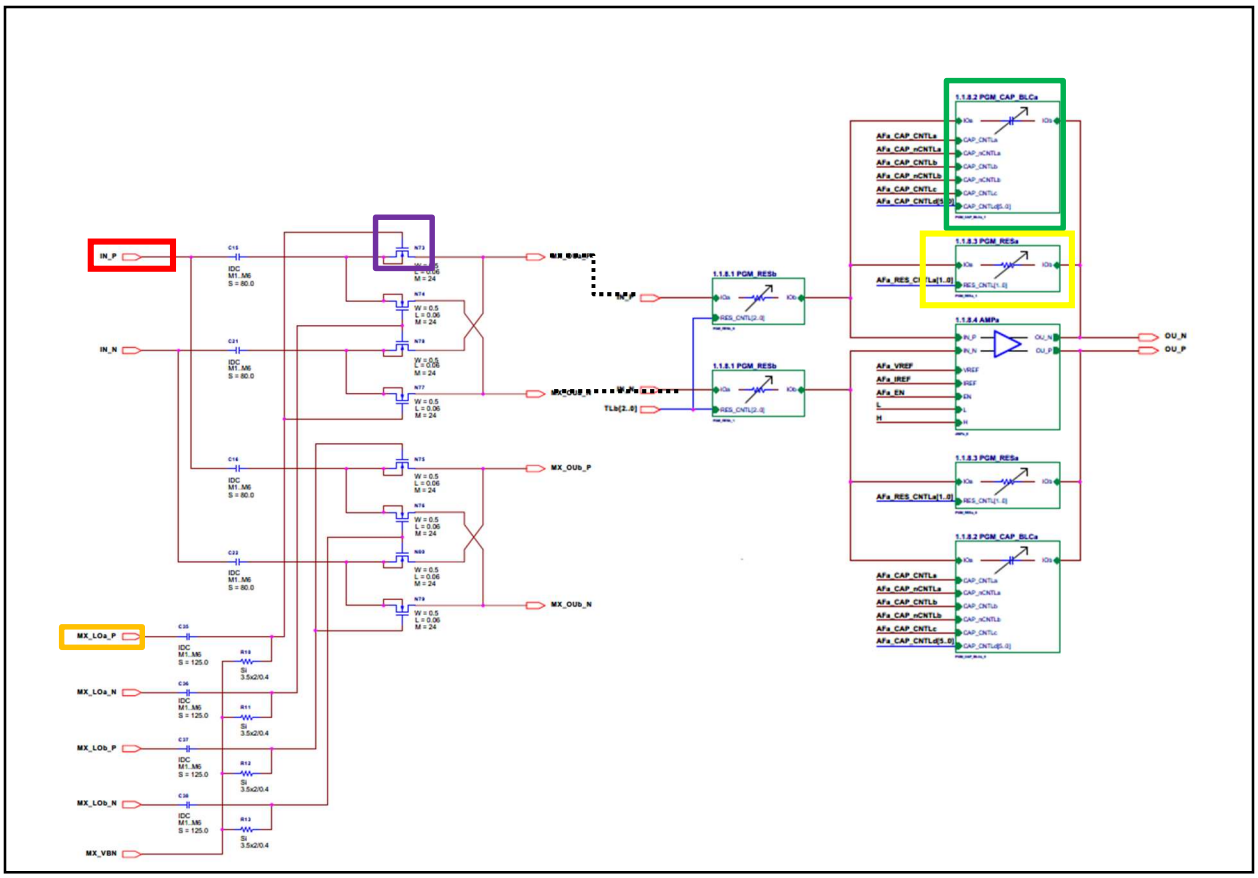
IN_P
IN_N
MX_LOa_P
MX_LOa_N
MX_LOb_P
MX_LOb_N
MX_VBN
MX_OUb_P
MX_OUb_N
TLb[2..0]
1.1.8.1 PGM_RESb
1.1.8.3 PGM_RESa
1.1.8.2 PGM_CAP_BLCa
1.1.8.4 AMPs
AFa_CAP_CNTLa
AFa_CAP_nCNTLa
AFa_CAP_CNTLb
AFa_CAP_nCNTLb
AFa_CAP_CNTLc
AFa_VREF
AFa_IREF
AFa_EN
OU_N
OU_P

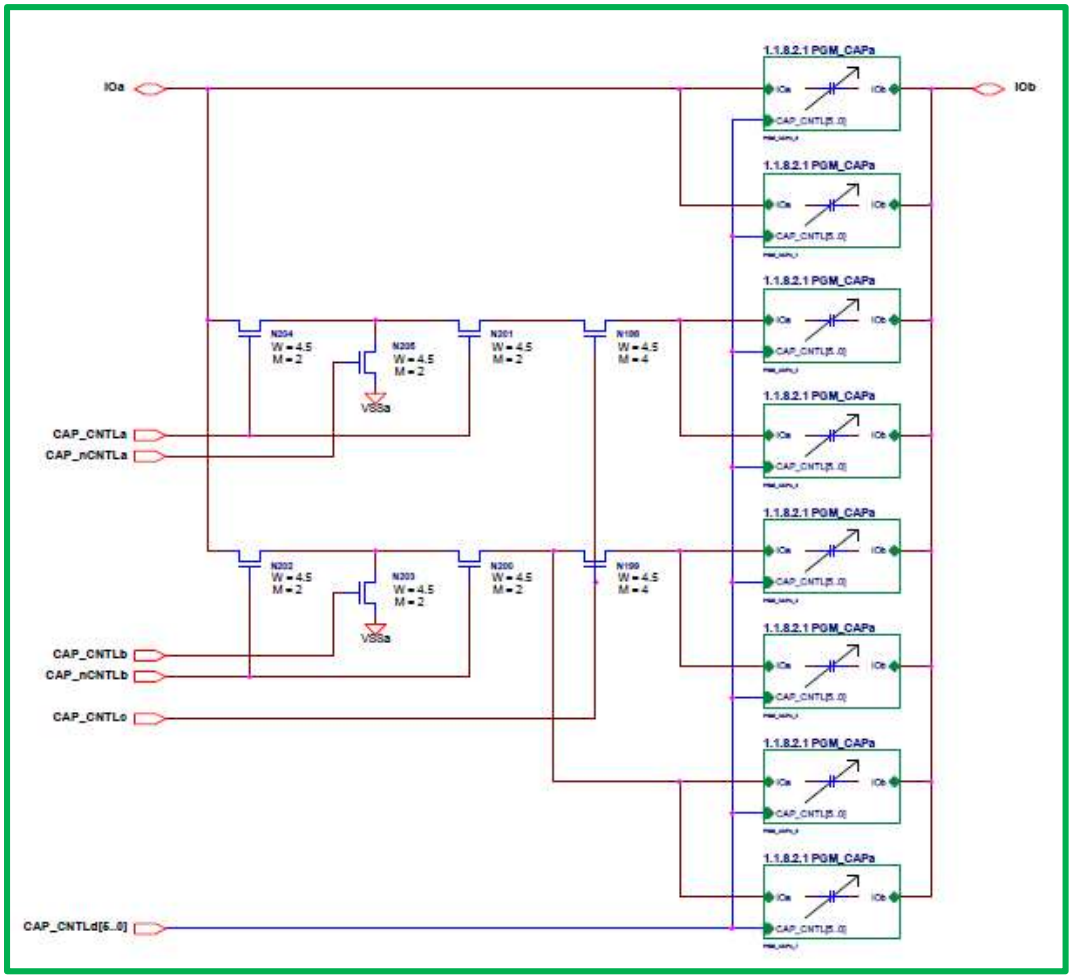
IOa
IOb
1.1.8.2.1 PGM_CAPa
CAP_CNTLa
CAP_nCNTLa
CAP_CNTLb
CAP_nCNTLb
CAP_CNTLc
CAP_CNTLd[5..0]
VSSa

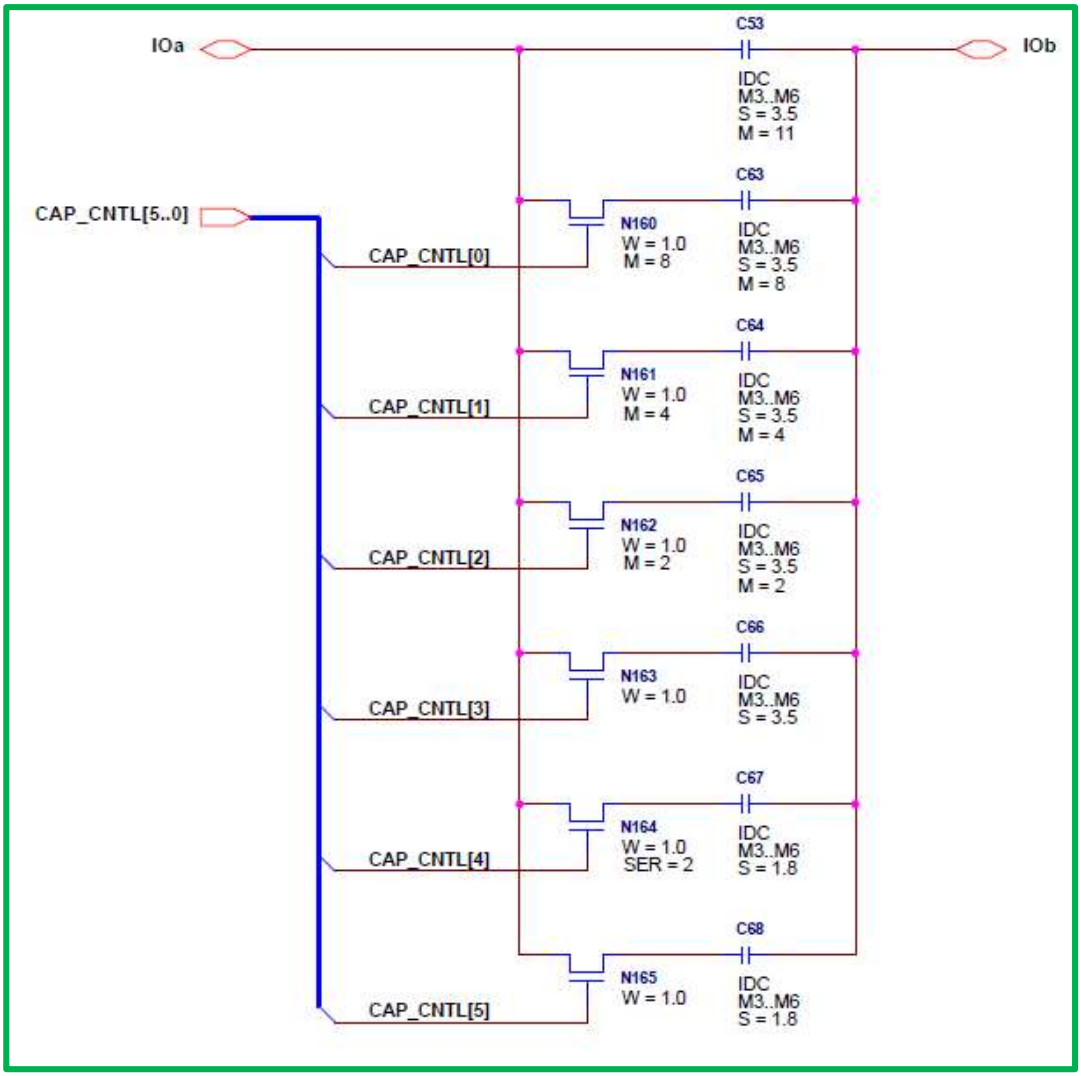

62. On information and belief, each Realtek Chip includes at least four receiver paths and the frequency down-converter (and subsequent circuitry) of each receiver path has the same architecture, is connected in same manner, and functions in the same way.

63. ParkerVision has been damaged by the direct infringement of Realtek and is suffering and will continue to suffer irreparable harm and damages as a result of this infringement.

COUNT II – Infringement of United States Patent No. 7,865,177

64. The allegations set forth above are re-alleged and incorporated by reference as if they were set forth fully here.

65. Realtek and/or others on its behalf (e.g., U.S. distributors) directly infringe (literally and/or under the doctrine of equivalents) the ’177 patent by using, selling, offering for sale, and/or importing in/into the United States products covered by at least claim 14 of the ’177 patent. Realtek infringes each step of claim 14 because the Realtek Chips automatically, and without user modification, perform each of the claimed steps.

66. On information and belief, Realtek products that infringe at least claim 14 of the ’177 patent include, but are not limited to, the Realtek Chips and any other Realtek product that is capable of down-converting a higher-frequency signal to a lower-frequency signal as claimed in the ’177 patent. On information and belief, Realtek uses the Realtek Chips at least by testing or demonstrating the Realtek Chips (or having others do so on its behalf) in the United States.

67. On information and belief, the Realtek Chips perform a method for down-converting an electromagnetic signal (e.g., high frequency RF signal). The method is performed on the receiver side of each Realtek Chip.

68. On information and belief, each Realtek Chip receives an input signal (e.g., high frequency RF signal) at a first and second matched filtering/correlating module. Each matched filtering/correlating module is linear time-variant circuitry that samples a modulated RF carrier signal at an aliasing rate. On information and belief, sampling is performed using a switch (e.g., one or more transistors), which turns ON and OFF. The switch has an independent control input that is driven by a control signal (e.g., LO signal). On information and belief, the control signal has non-negligible, periodic apertures (e.g., periods of time when the transistor(s) is ON/receives a 25% duty cycle LO signal). On information and belief, non-negligible amounts of energy from

the RF signal are accumulated (e.g., in one or more capacitors in each matched filtering/correlating module) and transferred to a low impedance load (e.g., one or more resistors) during an aperture period (e.g., when the switch is closed (ON)). Each Realtek Chip meets wireless telecommunication standards including, but not limited to, IEEE 802.11a, 802.11b, 802.11g, 802.11n, and 802.11ac. *See, e.g.,* https://www.realtek.com/en/products/communications-network-ics/item/rtl8812bu. On information and belief, the capacitor(s) discharges energy through the low impedance load between aperture periods (e.g., when the switch is open (OFF)). In this way, real power from the RF signal is transferred to the low impedance load and produces a down-converted signal with enhanced signal-to-noise power ratio.

69. On information and belief, each Realtek Chip down-converts the input signal at the first matched filtering/correlating according to a first control signal (e.g., a first LO signal) and outputs a first down-converted signal (e.g., a first baseband signal).

70. On information and belief, each Realtek Chip down-converts the input signal at the second matched filtering/correlating according to a second control signal (e.g., a second LO signal) and outputs a second down-converted signal (e.g., a second baseband signal).

71. On information and belief, a differential amplifier circuit in each Realtek Chip combines the second down-converted signal (e.g., second baseband signal) and the first down-converted signal (e.g., first baseband signal) to output a first channel down-converted signal.

72. For example, as shown in the exemplary schematic diagrams of Realtek's RTL8812BU chip (below), a single receiver path includes the following exemplary circuit components: input signal (red box), LO signal (orange box), switch (transistor(s), shown in the

purple box), storage capacitor(s) (green box), low impedance load (resistor(s), shown in the yellow box), and differential amplifier circuit (blue box).

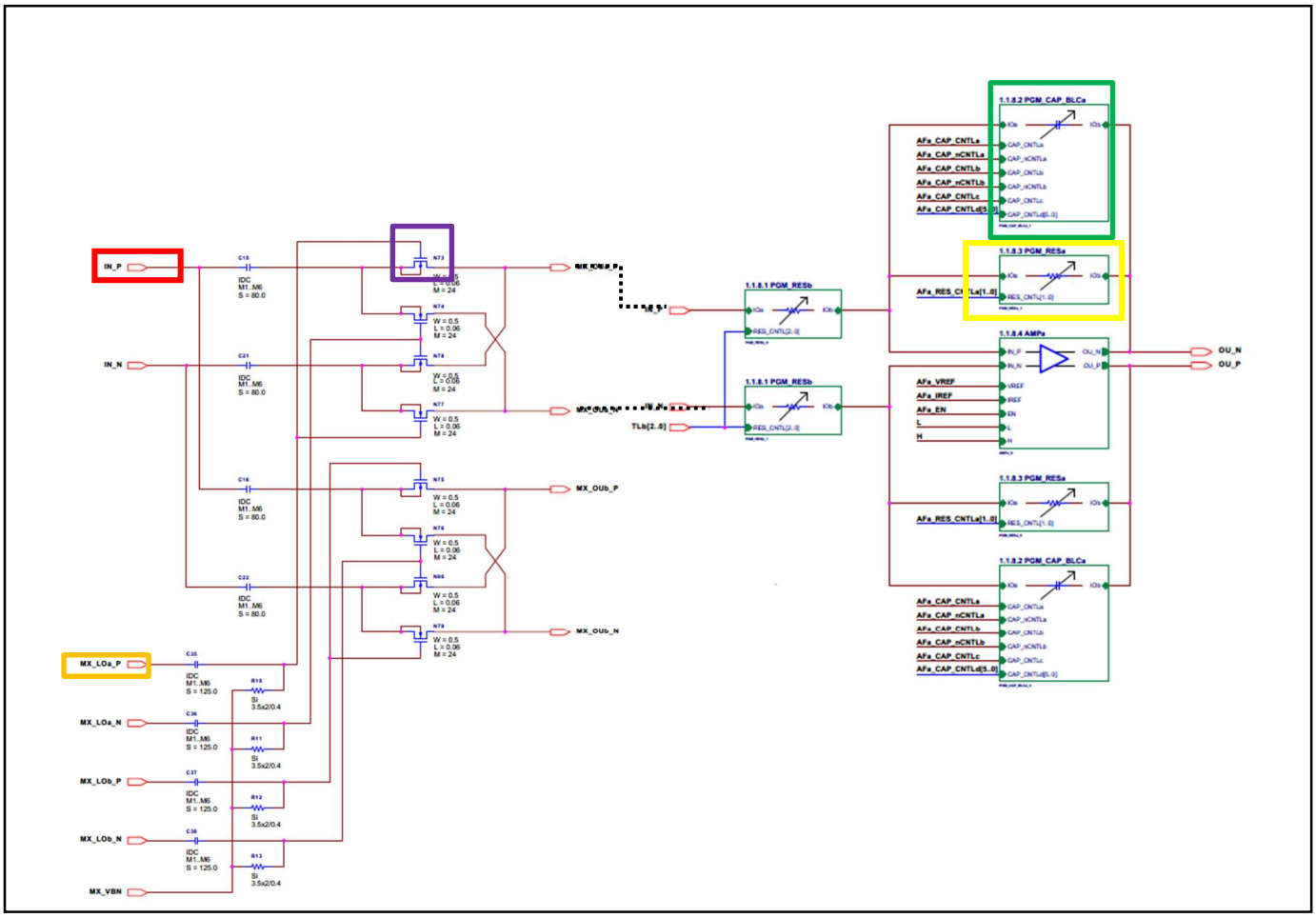

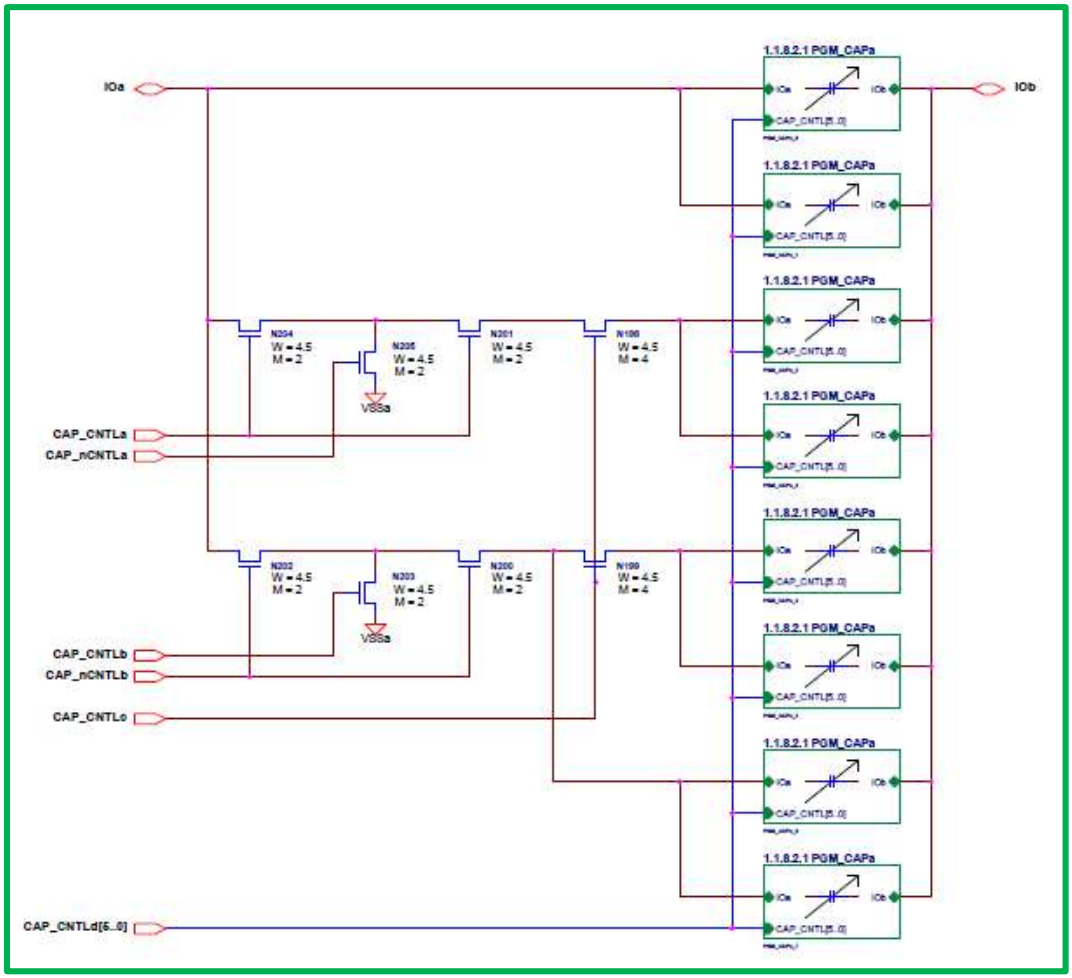
IOa
IOb
1.1.8.2.1 PGM_CAPa
CAP_CNTLa
CAP_nCNTLa
CAP_CNTLb
CAP_nCNTLb
CAP_CNTLc
CAP_CNTLd[5..0]
VSSa
W = 4.5
M = 2
M = 4

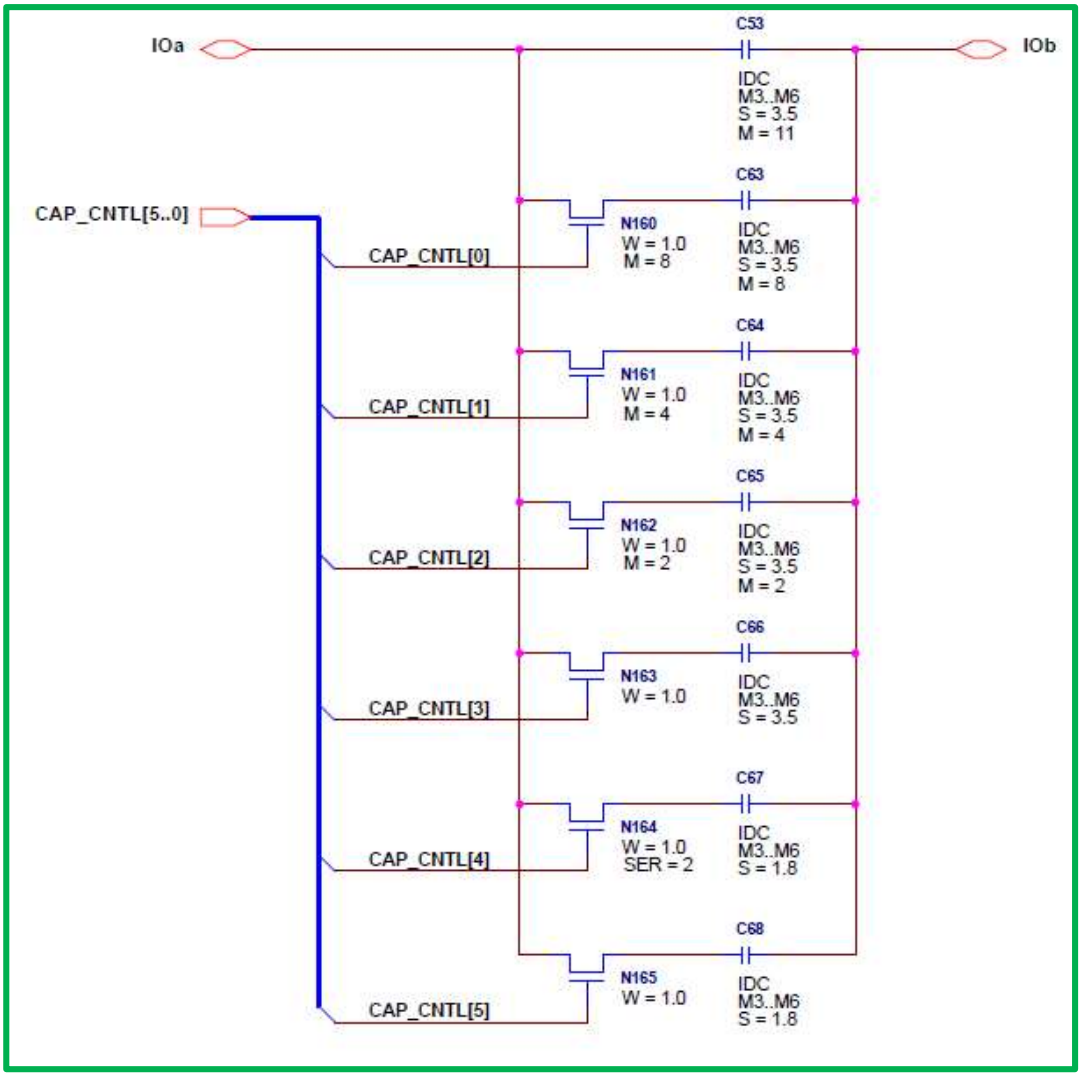
IOa
IOb
C53
IDC
M3..M6
S = 3.5
M = 11
CAP_CNTL[5..0]
C63
N160
W = 1.0
M = 8
IDC
M3..M6
S = 3.5
M = 8
CAP_CNTL[0]
C64
N161
W = 1.0
M = 4
IDC
M3..M6
S = 3.5
M = 4
CAP_CNTL[1]
C65
N162
W = 1.0
M = 2
IDC
M3..M6
S = 3.5
M = 2
CAP_CNTL[2]
C66
N163
W = 1.0
IDC
M3..M6
S = 3.5
CAP_CNTL[3]
C67
N164
W = 1.0
SER = 2
IDC
M3..M6
S = 1.8
CAP_CNTL[4]
C68
N165
W = 1.0
IDC
M3..M6
S = 1.8
CAP_CNTL[5]

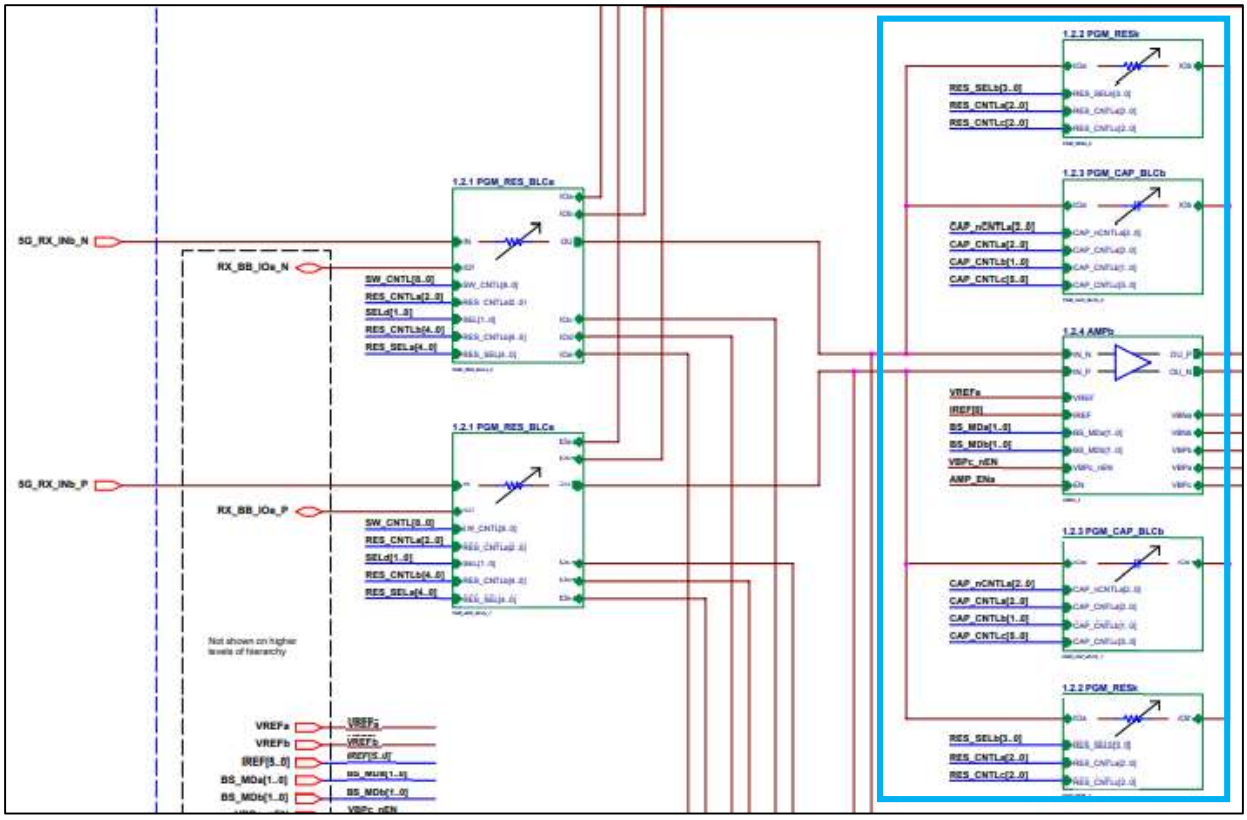

73. On information and belief, each Realtek Chip includes at least four receiver paths and the frequency down-converter (and subsequent circuitry) of each receiver path has the same architecture, is connected in same manner, and functions in the same way.

74. ParkerVision has been damaged by the direct infringement of Realtek and is suffering and will continue to suffer irreparable harm and damages as a result of this infringement.

COUNT III - Infringement of United States Patent No. 9,118,528

75. The allegations set forth above are re-alleged and incorporated by reference as if they were set forth fully here.

76. Realtek and/or others on its behalf (e.g., U.S. distributors) directly infringe (literally and/or under the doctrine of equivalents) the ’528 patent by using, selling, offering for

sale, and/or importing in/into the United States products covered by at least claim 1 of the ’528 patent.

77. On information and belief, Realtek products that infringe at least claim 1 of the ’528 patent include, but are not limited to, the Realtek Chips and any other Realtek product that is capable of down-converting a higher-frequency signal to a lower-frequency signal as claimed in the ’528 patent. On information and belief, Realtek uses the Realtek Chips at least by testing or demonstrating the Realtek Chips (or having others do so on its behalf) in the United States.

78. On information and belief, each Realtek Chip is/includes a system for frequency down-converting a modulated carrier signal (e.g., high frequency RF signal) to a baseband signal. Each Realtek Chip includes a first switch (e.g., one or more transistors) coupled to a first control signal (e.g., an LO signal) which comprises a sampling aperture (e.g., 25% duty cycle) with a specified frequency, wherein the first switch is on and a portion of energy that is distinguishable from noise is transferred from the modulated carrier signal (e.g., high frequency RF signal) as an output of the first switch during the sampling aperture of the first control signal. Each Realtek Chip meets wireless telecommunication standards including, but not limited to, IEEE 802.11a, 802.11b, 802.11g, 802.11n, and 802.11ac. *See, e.g.,* https://www.realtek.com/en/products/communications-network-ics/item/rtl8812bu.

79. On information and belief, each Realtek Chip includes a first energy storage element (e.g., one or more capacitors) that stores the transferred energy from the modulated carrier signal and outputs a down-converted in-phase baseband signal portion of the modulated carrier signal.

80. On information and belief, each Realtek Chip includes a second switch (e.g., one or more transistors) coupled to a second control signal (e.g., an LO signal) which comprises a

sampling aperture (e.g., 25% duty cycle) with a specified frequency, wherein the second switch is on and a portion of energy that is distinguishable from noise is transferred from the modulated carrier signal (e.g., high frequency RF signal) as an output of the second switch during the sampling aperture of the second control signal.

81. On information and belief, each Realtek Chip includes a second energy storage element (e.g., one or more capacitors) that stores the transferred energy from the modulated carrier signal and outputs a down-converted inverted in-phase baseband signal portion of the modulated carrier signal.

82. On information and belief, the portions of transferred energy from each of the first and second switch are integrated over time to accumulate the portions of transferred energy from which the down-converted in-phase baseband signal portion and the down-converted inverted in-phase baseband signal portion are derived.

83. On information and belief, each Realtek Chip includes a first differential amplifier circuit that combines the down-converted in-phase baseband signal portion with the down-converted inverted in-phase baseband signal portion and outputs a first channel down-converted differential in-phase baseband signal.

84. For example, as shown in the exemplary schematic diagrams of Realtek's RTL8812BU chip (below), a single receiver path includes the following exemplary circuit components: input signal (red box), LO signal (orange box), switch (transistor(s), shown in the purple box), storage capacitor(s) (green box), low impedance load (resistor(s), shown in the yellow box), and differential amplifier circuit (blue box).

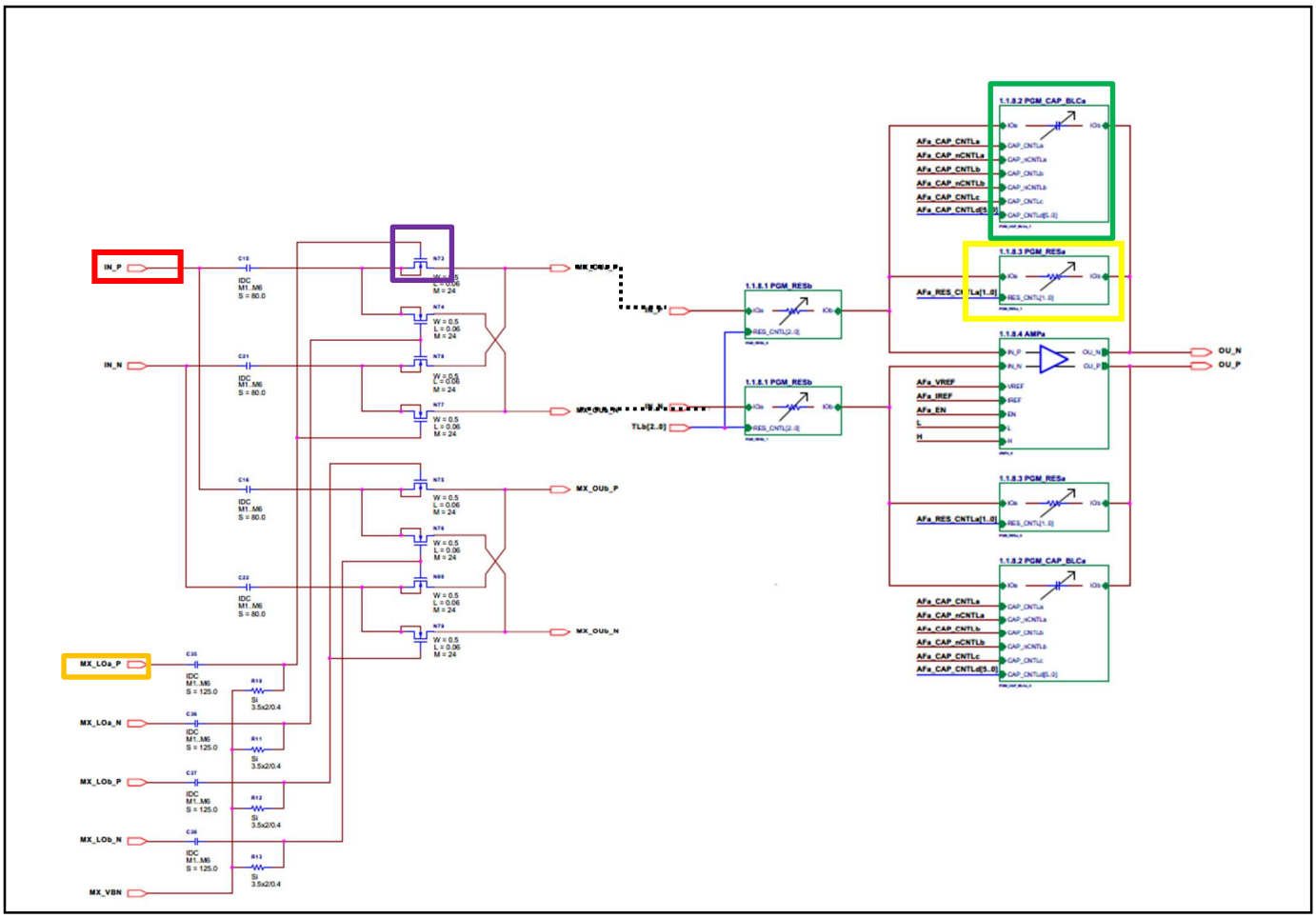
IN_P
IN_N
MX_LOa_P
MX_LOa_N
MX_LOb_P
MX_LOb_N
MX_VBN
MX_OUb_P
MX_OUb_N
1.1.8.1 PGM_RESb
1.1.8.1 PGM_RESb
1.1.8.2 PGM_CAP_BLCa
1.1.8.3 PGM_RESa
1.1.8.4 AMPa
1.1.8.3 PGM_RESa
1.1.8.2 PGM_CAP_BLCa
AFa_CAP_CNTLa
AFa_CAP_nCNTLa
AFa_CAP_CNTLb
AFa_CAP_nCNTLb
AFa_CAP_CNTLc
AFa_CAP_CNTLd[5..0]
AFa_VREF
AFa_IREF
AFa_EN
L
H
AFa_RES_CNTLa[1..0]
OU_N
OU_P

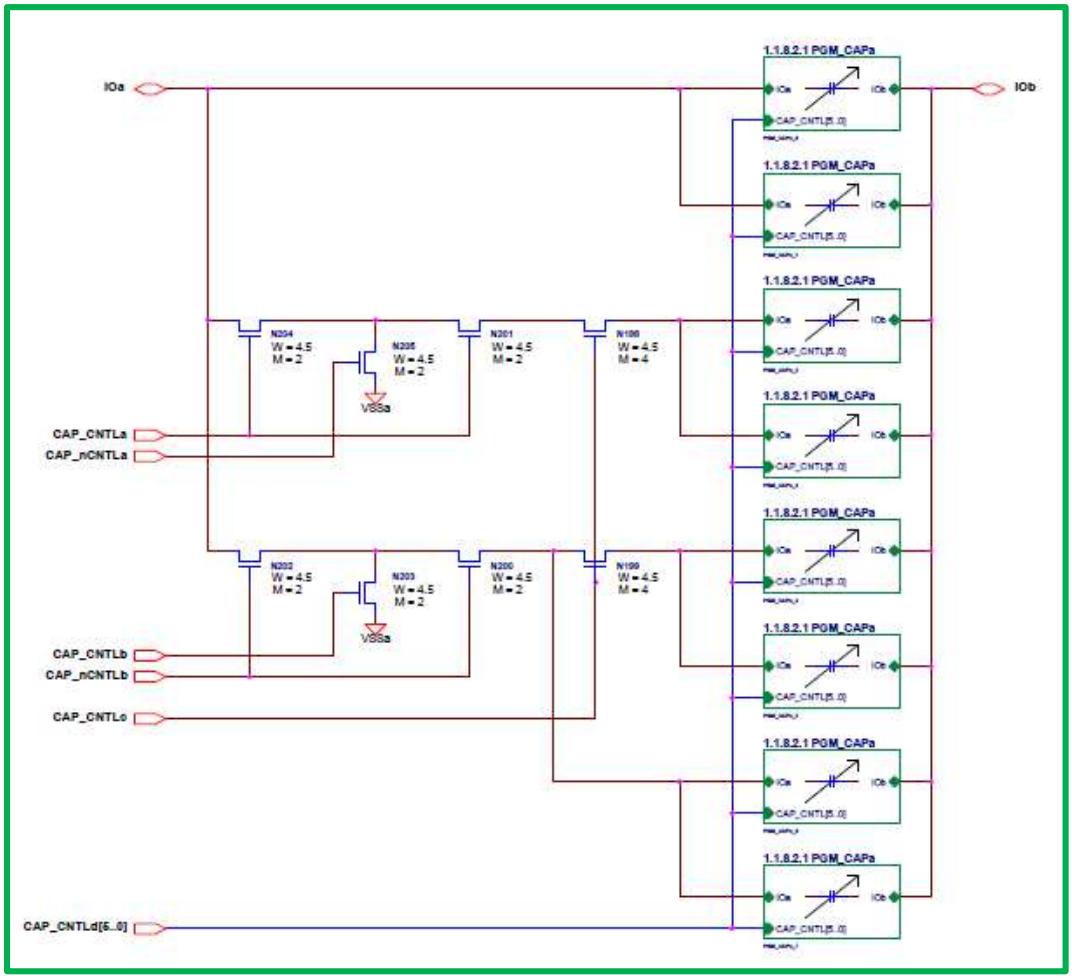
IOa
IOb
1.1.8.2.1 PGM_CAPa
CAP_CNTLa
CAP_nCNTLa
CAP_CNTLb
CAP_nCNTLb
CAP_CNTLc
CAP_CNTLd[5..0]
VSSa

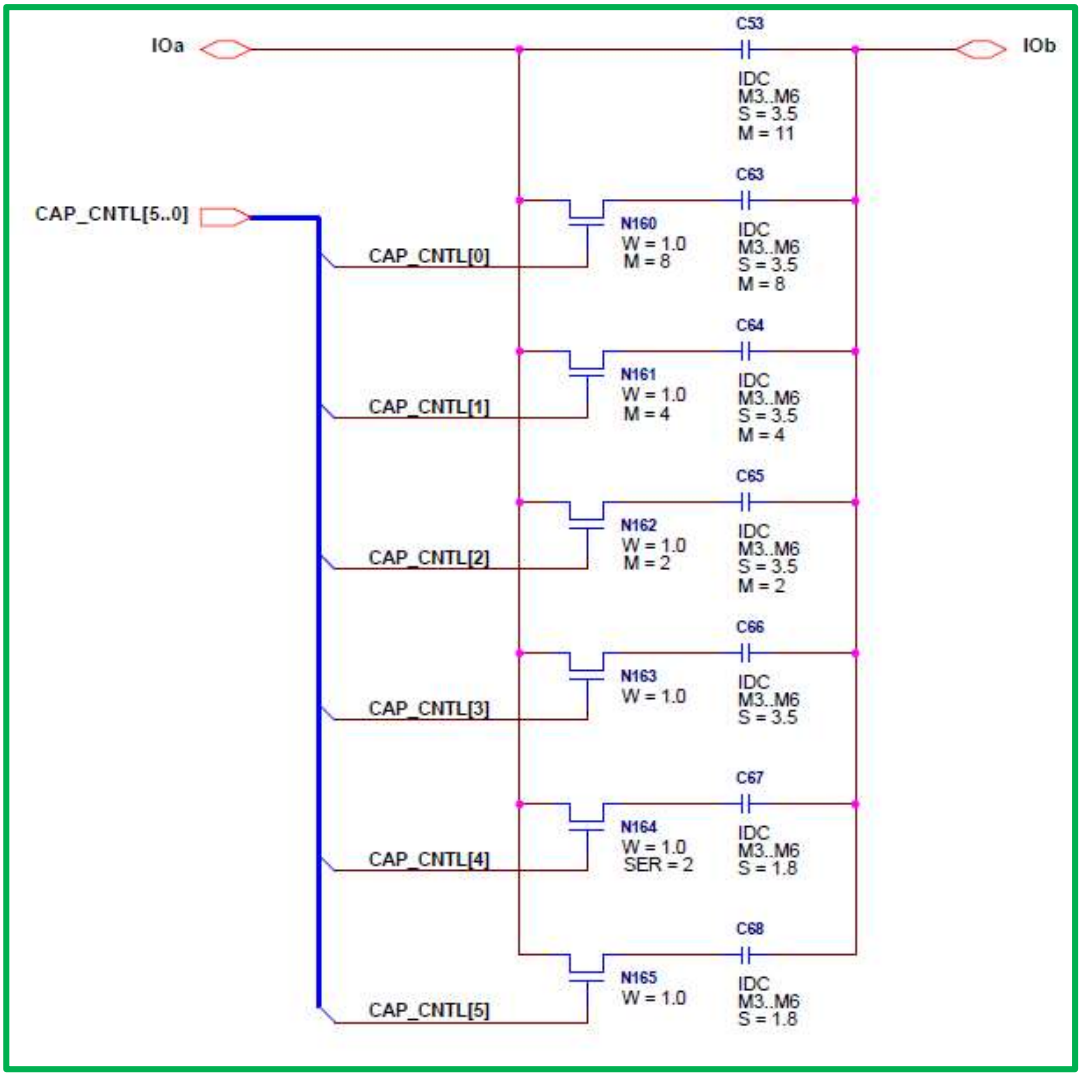
IOa
IOb
C53
IDC
M3..M6
S = 3.5
M = 11
CAP_CNTL[5..0]
C63
N160
W = 1.0
M = 8
IDC
M3..M6
S = 3.5
M = 8
CAP_CNTL[0]
C64
N161
W = 1.0
M = 4
IDC
M3..M6
S = 3.5
M = 4
CAP_CNTL[1]
C65
N162
W = 1.0
M = 2
IDC
M3..M6
S = 3.5
M = 2
CAP_CNTL[2]
C66
N163
W = 1.0
IDC
M3..M6
S = 3.5
CAP_CNTL[3]
C67
N164
W = 1.0
SER = 2
IDC
M3..M6
S = 1.8
CAP_CNTL[4]
C68
N165
W = 1.0
IDC
M3..M6
S = 1.8
CAP_CNTL[5]

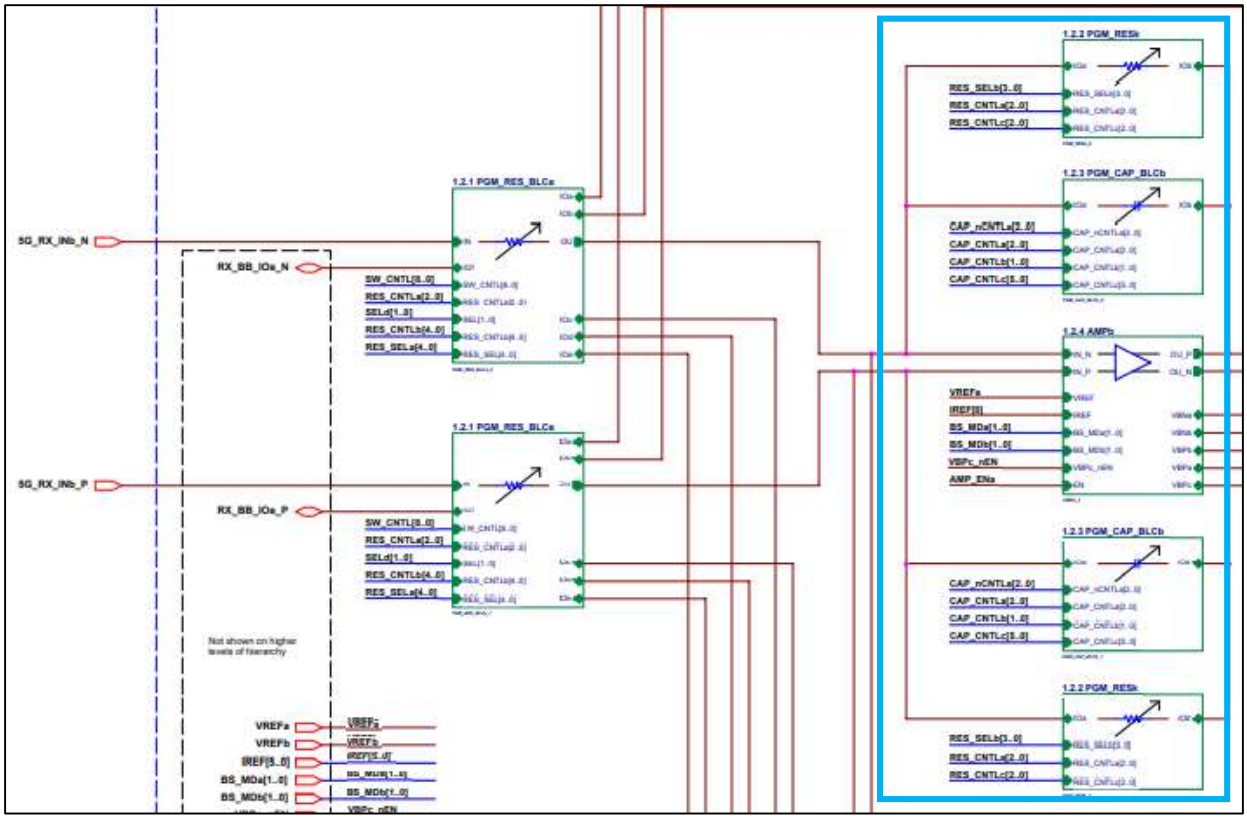

85. On information and belief, each Realtek Chip includes at least four receiver paths and the frequency down-converter (and subsequent circuitry) of each receiver path has the same architecture, is connected in same manner, and functions in the same way.

86. ParkerVision has been damaged by the direct infringement of Realtek and is suffering and will continue to suffer irreparable harm and damages as a result of this infringement.

JURY DEMANDED

Pursuant to Rule 38(b) of the Federal Rules of Civil Procedure, ParkerVision hereby requests a trial by jury on all issues so triable.

PRAYER FOR RELIEF

WHEREFORE, ParkerVision respectfully requests that the Court enter judgment in its favor and against Realtek as follows:

a. finding that Realtek directly infringes one or more claims of each of the patents-in-suit;

b. awarding ParkerVision damages under 35 U.S.C. § 284, or otherwise permitted by law, including supplemental damages for any continued post-verdict infringement;

c. awarding ParkerVision pre-judgment and post-judgment interest on the damages award and costs;

d. awarding cost of this action (including all disbursements) and attorney fees pursuant to 35 U.S.C. § 285, or as otherwise permitted by the law; and

e. awarding such other costs and further relief that the Court determines to be just and equitable.

Dated: May 16, 2023

Respectfully submitted,

THE MORT LAW FIRM, PLLC

/s/ Raymond W. Mort, III
Raymond W. Mort, III
Texas State Bar No. 00791308
raymort@austinlaw.com
501 Congress Avenue, Suite 150
Austin, Texas 78701
Tel/Fax: 512-865-7950

Attorneys for Plaintiff ParkerVision, Inc.

OF COUNSEL:

Ronald M. Daignault*#
Chandran Iyer*
Jason Charkow*#
Scott Samay*#
Stephanie Mandir*
Zachary H. Ellis* (Texas State Bar No. 24122606)

DAIGNAULT IYER LLP
rdaignault@daignaultiyer.com
cbiyer@daignaultiyer.com
jcharkow@daignaultiyer.com
smandir@daignaultiyer.com
zellis@daignaultiyer.com
8618 Westwood Center Drive
Suite 150
Vienna, VA 22182

#Not admitted in Virginia
**Pro hac vice to be filed*