A Novel Scheduling Scheme and MAC Enhancements for IEEE 802.15.3 High-Rate WPAN

*RanRan Zeng and **Geng-Sheng (G.S.) Kuo
*National Key Laboratory of Networking & Switching and Telecommunications Engineering School
Beijing University of Posts and Telecommunications
Beijing, China
**National Chengchi University
Taipei, Taiwan
gskuo@ieee.org

Abstract - **High-Rate Wireless Personal Area Network (HR WPAN) is designed to achieve high data rate up to 55Mbps and to provide QoS guarantee for multimedia traffic. However, the IEEE 802.15.3 standard for HR WPAN does not specify the scheduling scheme, which is very crucial to the total system performance. In this paper, by using the queuing model M/M/c, we designed a novel scheduling scheme for both reducing the average waiting time and meeting the QoS requirements. Comparing with the original standard, simulation results show that our proposed scheduling scheme reduces the average waiting time by 43.87%. In addition, in order to make our proposed scheme more efficient, a command-aggregation scheme for higher channel utilization is further proposed to enhance the MAC of IEEE 802.15.3. Theoretical analyses prove that the scheme accomplishes improvement in terms of throughput over the existing MAC.**

Keywords - HR WPAN, MAC, IEEE 802.15.3 standard, scheduler, QoS guarantee

I INTRODUCTION

The development of Wireless Personal Area Network (WPAN) is promoted by the needs for wireless connectivity of high data rate, low cost, low complexity and low power consumption. IEEE 802.15.3 standard was designed particularly for the High Rate WPAN (HR WPAN) which can support short-range communications among portable consumer electronic devices at high data rate up to 55Mbps [1]. The specifications of IEEE 802.15.3 MAC [2] defined a TDMA-based superframe structure which consists of three major parts: a beacon, an optional Contention Access Period (CAP) and a Contention Free Period (CFP). The beacon frame transmitted by the piconet coordinator (PNC) at the beginning of each superframe is used to set the timing allocations and broadcast management information for devices in the piconet. The CAP allows devices in the piconet to transmit non-QoS asynchronous data and commands, during which Carrier Sense Multiple Access/Collision Avoidance (CSMA/CA) mechanism is used. The CFP is composed of channel time allocations (CTAs), which are requested by the devices and allocated by the PNC according to the scheduling mechanism.

Since HR WPAN is designed to support real-time and large file transfer applications, such as video and high-quality audio traffic, the communications between these multimedia-capable devices require high data rate and QoS provisions. Because a good scheduling scheme can provide higher efficient utilization of the channel capacity and QoS guarantee, it is essential for HR WPAN and should be carefully considered in the protocol. In the standard family of WPAN, some scheduling schemes have been investigated in medium-rate WPAN (802.15.1/Bluetooth) and low-rate WPAN (802.15.4) [3] [4]. However, the IEEE 802.15.3 standard doesn't include any scheduling method. All scheduling schemes in other systems such as Wireless LAN and ad hoc wireless network [5] [7] [9] [10] can not be directly applied to WPAN because their media access control protocols differ from that of 802.15.3. Some efforts have been made to bridge this gap for HR WPAN, but the previous works are too few to exploit complete QoS-aware scheduling schemes. Our study in this paper is focused on designing a novel scheduling scheme for IEEE 802.15.3 WPAN to reduce the average waiting time and meet the QoS requirements. The proposed scheme has been evaluated by theoretical analyses and simulations and can achieve better performance than the existing MAC mechanisms. Furthermore, since our scheduling scheme reduces the average waiting time, more devices can acquire channel resources. However, the CSMA/CA mechanism and heavy physical header reduce the transmission efficiency during the CAP and limit the number of devices which send channel time requests successfully. As a result, we can not benefit from the proposed scheduling scheme in the best situation. Therefore, a command-aggregation scheme is proposed as the modification to the original 802.15.3 MAC. The enhanced scheme improves channel utilization efficiency, avoids the collisions over wireless medium and achieves higher throughput performance.

The rest of this paper is organized as follows. The queuing model M/M/c based on the MAC mechanism of 802.15.3 has been introduced and a scheduling scheme is proposed in Section II. In Section III, by taking advantages of the proposed scheduling scheme, we design a command-aggregation scheme as the enhancement to 802.15.3 MAC. In Section IV, the performance evaluations of our results are conducted. Finally, conclusions are made.

II THE PROPOSED SCHEDULING SCHEME

2.1 Analysis and Modeling

Authorized licensed use limited to: Goodwin Procter LLP. Downloaded on December 19,2024 at 15:47:44 UTC from IEEE Xplore. Restrictions apply.

INTEL-1018
U.S. Patent 9,265,043

In this section, we propose a novel scheduling scheme when the traffic of piconet is saturated. Theoretical analyses will be carried out by employing an M/M/c queuing model. In the existing 802.15.3 standard, the devices that are members of piconet send the channel time request commands if they have data to transmit. Once there is channel time available, the PNC has to allocate the CTAs and remember that stream for every superframe until another channel time request for that stream is received from the source device. In the previous scheduling schemes, much works have been focused on how to compute the allocated time and sub-rate CTA rate or super-rate CTA rate to guarantee the QoS classes, while neglecting the waiting time for new devices to access channel. The whole time of channel time allocation period (CTAP) can be soon occupied and can not be released easily until one of communication streams is terminated. Once there is no available time in the superframe, the PNC will send the channel time response with the Reason Code field "unsuccessful" regardless of the QoS priority of that stream. It exerts serious influence on the traffic which has high delay requirement. The waiting time is at least several superframes and is less tolerant to the audio and video traffic (delay < 100ms). Based on the above analyses of the problems, we proposed a scheduling scheme for QoS guarantee over IEEE 802.15.3 WPAN in order to make it a more efficient resource allocation mechanism. The scheme is proved to achieve better performance by means of the queuing theory.

According to the original 802.15.3 MAC mechanism, we abstract the channel allocation scheme to the queuing model M/M/c. Assume that different classes of arrivals represent the different QoS priority streams requested by the devices and c servers in the queue system represent that c CTAs have been allocated for current transmissions. The corresponding relationship between channel allocations and queuing model can be illustrated in Fig. 1.

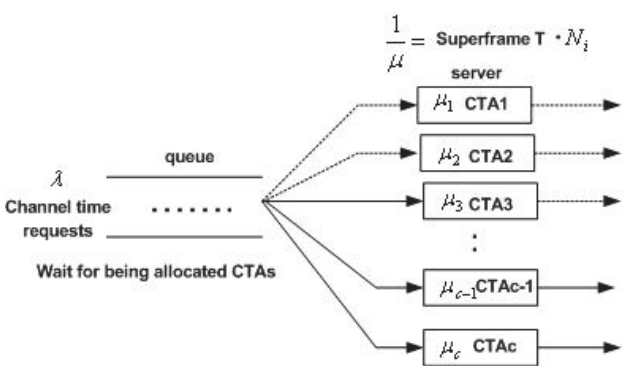

Fig. 1. The queuing model.

Suppose that the channel time requests arrive at the PNC in Poisson stream with rate λ and require exponentially distributed service time of mean μ^{-1}. The average service time is not just one CTA in one superframe, but the whole transmission time of device pairs. In addition, let $\rho = \frac{\lambda}{s\mu}$ represent server utilization ratio. The scheduling system is a typical M/M/c queuing model from which the state-transition diagram is obtained. We can establish the global balance equations (rate-in=rate out) as follows:

$$\begin{cases} \mu P_1 = \lambda P_0 \\ (n+1)\mu P_{n+1} + \lambda P_{n-1} = (\lambda + n\mu) P_n \\ c\mu P_{n+1} + \lambda P_{n-1} = (\lambda + c\mu) P_n \\ \sum_{i=0}^{\infty} P_i = 1 \end{cases} \quad (1)$$

After some manipulations on Eq. (1), and Little Equation in queuing theory, we obtain the results of P_0 and system average waiting time W_q:

$$P_0 = [\sum_{k=0}^{c-1} \frac{1}{k!}(\frac{\lambda}{\mu})^k + \frac{1}{c!}\frac{1}{1-\rho}(\frac{\lambda}{\mu})^c]^{-1} \quad (2)$$

$$W_q = \frac{\frac{(c\rho)^c \rho}{c!(1-\rho)^2}[\sum_{k=0}^{c-1}\frac{1}{k!}(\frac{\lambda}{\mu})^k + \frac{1}{c!}\frac{1}{1-\rho}(\frac{\lambda}{\mu})^c]^{-1}}{\lambda} \quad (3)$$

According to the original MAC, once channel time responses are received with "successful" from the PNC, the pair will be allowed to enter the queuing system and be served until the devices request a modification or termination of the channel time. If the value of average service time μ^{-1} is relative large when compared with the arriving rate λ, the queuing system is busy for most of time. It leads to very long waiting time for DEVs to be allocated channel resources. We consider the situation that when all CTAs in the superframe have been allocated to different device pairs, the access requests of higher priority traffic continue to arrive at the PNC in the following superframe CAP, we call this case as saturation condition. In existing channel access mechanism, the new arriving traffic should not be allowed to assign CTAs and have to wait until one of them becomes idle again. Our proposal lets the PNC reassign the CTA duration in order that higher QoS traffic can be immediately transmitted over wireless medium. To be more specific, we cut the CTA duration of the lower class traffic, while increase the allocated CTA number c. The saved CTA duration is allocated to some QoS class traffic according to some rules and scheduling algorithms. However, the simple increase of the CTA number or the reduction of a single CTA duration will lead to longer transmission time. Mapped to our queuing model, the corresponding operation is the increase of the server number c. It can be known from Eq. (3) the average waiting time is a monotone decreasing function with the increase of c when all the other variables are set to some values. However, it is noted that the average service time μ^{-1} will also increase along with c, so we can not ensure that whether W_q can be

Authorized licensed use limited to: Goodwin Procter LLP. Downloaded on December 19,2024 at 15:47:44 UTC from IEEE Xplore. Restrictions apply.

INTEL-1018
U.S. Patent 9,265,043

optimized correspondingly. Therefore, we made a serious study of W_q and drew important conclusions as follows.

1. Only when $c > \frac{\lambda}{\mu}$, W_q will decrease with c. From the view of W_q we can prove the equilibrium condition for queuing system is $\rho = \frac{\lambda}{c\mu} < 1$. Therefore, if the original channel access method is adopted, the arriving rate λ will be much larger than service rate μ. The ρ will soon exceed 1, which can lead to instability of the queuing system. As a result, the queue length will increase without limit. Therefore, by properly increasing c, the whole performance of the system will be greatly improved.

2. Based on the above analyses, the average service time μ^{-1} is an increasing function of c. However, the increase of μ^{-1} leads to the increase of W_q. So the performance improvement brought by the increase of c may not compensate the deterioration result from the increase of μ^{-1}. When c is larger than some value x ($\frac{\partial W_q}{\partial c} = 0 \Rightarrow x$), $W_q = f(c)$ will maintain constant from that point and will not decrease any more. We found that only when $c \in ([\frac{\lambda}{\mu}], [x])$, the curve of W_q falls rapidly; μ^{-1} increases slowly with the increase of c; and W_q in this region will still descend in spite of the effect of μ^{-1}. By taking the advantage of this property, the increase of c only affects one or two pairs' CTA duration, and the average service time of all devices changes a little each time. The main idea of our scheduling scheme has been proven to reduce the packet delay significantly compared with the existing mechanisms.

1.2 Scheduling Scheme

Theoretical analyses have indicated that when we increase the value of $c \in ([\frac{\lambda}{\mu}], [x])$ the average waiting time will decrease obviously. Therefore, it is necessary to design an appropriate scheduling scheme for both reducing average waiting time and satisfying different QoS traffic. In this section, a novel scheduling scheme is proposed.

According to the 802.1D priority scheme, the 8 different QoS priorities are used in our scheme and each of them is described in Table 1. The traffic with high priorities is allowed to be allocated CTAs in the following superframe after sending the requests to the PNC and does not need to wait for the idle of channel. We arrange all CTAs in a queue according to their QoS traffic classes and CTA durations respectively. For example, the CTAs can be sorted in an increasing order as (k_{11}, k_{12}, k_{21}, k_{31}, k_{32}, k_{51}, k_{61}, k_{62}, k_{63}). k_{mn} corresponds to one CTA, m represents one of the eight QoS levels and is in the range of (0, 7), and n represents the relative length of CTAs in the same QoS level. So k_{32} is the CTA in which the traffic belongs to the 3rd QoS level and the CTA duration is the second smallest among all 3 QoS level CTAs. Assume that all the channel time has been allocated to the devices' pairs in the superframe m and the scheduling system is considered in saturation condition. The algorithm procedure is as follows. For each beacon interval, a new traffic request arrives at the PNC.

Table 1. IEEE 802.15.3 traffic type

User priority	Traffic type	User for:	Comments
0	Best effort (BE)	Asynchronous data	Default piconet traffic
1	Backgroud (BK)	Asynchronous data	
2		A spare	Currently not assigned
3	Excellent effort (EE)	Isochronous	For valued customers
4	Controlled load (CL)	Isochronous	Traffic will have to conform to some higher protocol layer admission control
5	Video (VI)	Isochronous	<100 ms delay and jitter
6	Voice(VI)	Isochronous	<10 ms delay and jitter
7	Network control (NC)		

If the traffic QoS level ≥ the smallest QoS level m_{min} in the current CTA queue, ***then*** it will be allowed to be allocated new CTA though there is no available channel resource in the superframe.

If the current CTA number c is in the range of ($[\lambda/\mu]$, $[x]$), we can increase the value of c by vacating a portion time in one CTA in which lowest QoS level streams are transmitted. Assumed that $i=m_{\min}$, $j=n_{\min}$, the scheduler should choose the corresponding k_{ij} CTA to give away half of its duration to the new requesting traffic. The results of this operation sacrifice some benefits of the traffic with lower priority in order to let higher QoS class traffic soon start transmission, rather than wait for a long time. Meanwhile, the CTA duration and CTA location of the original high QoS class traffic have not been affected by implementing this scheme, thus avoiding the jitter of data especially for multimedia stream. After the allocation of new CTA, k_{ij} can now be scored out and $m_{\min}$ and $n_{\min}$ should be updated (In that case k_{11} is scored out). In the next superframe, a new traffic request arrives. First, judge the two previous ***if*** conditions. If both of them are satisfied, choose in the queue (k_{11}, k_{12}, k_{21}, k_{31}, k_{32}, k_{51}, k_{61}, k_{62}, k_{63}). It is obvious that k_{12} CTA

Authorized licensed use limited to: Goodwin Procter LLP. Downloaded on December 19,2024 at 15:47:44 UTC from IEEE Xplore. Restrictions apply.

INTEL-1018
U.S. Patent 9,265,043

should have half of its duration time assigned to new traffic with high QoS class. Then, the server number $c=c+1$, and the remaining queue (k_{11}, k_{12}, k_{21}, k_{31}, k_{32}, k_{51}, k_{61}, k_{62}, k_{63}) is used for the next superframe.

Else $c \geq [x]$, c can not be increased. It means that if we continue to increase the CTA amount in a superframe, the average waiting time will degrade rapidly due to the influence of the mean service time μ^{-1}. Therefore, all requesting traffic has to wait regardless of their QoS levels.

Else in the case that the requesting traffic QoS level < any QoS level of CTAs in the current superframe, the traffic also has to wait until the scheduling algorithm operates in the next superframe.

III MAC ENHANCEMENTS

3.1 The Command-aggregation Scheme

In this section, we propose MAC enhancements based on the features of the above scheduling scheme, thus the channel utilization efficiency is increased due to reduced overheads. Since the proposed scheduling scheme reduces the average waiting time, it allows more devices access channel during the CAP in which the channel time requests and other commands transmit over wireless medium based on CSMA/CA and backoff algorithm. However, the existing MAC mechanism and duration of CAP limit the number of requesting devices, so the benefits of our scheduling scheme are partly eliminated. This is the main reason why some modifications should be made. In addition, we analyzed some characteristics of PHY layer for 802.15.3 and found that the frame body bits of MAC commands are so few that PLCP header and PLCP preamble seem a large overhead and burden. In the specification of Multi-band OFDM physical layer defined by the IEEE 802.15 task group (TG) 3a [14] for the IEEE 802.15.3, only the PLCP preamble consists of 30 OFDM symbols (each symbols have 200 coded bits), but most commands are formatted in less than 100 bits. Though high rate data can effectively be transmited during the period of CTA because the maximum data frame payload can be 4095 bytes, it is a waste of time when a short frame body with a heavy header is transmitted during the CAP using CSMA/CA mechanism. Once a DEV contends successfully for channel, it sends too little useful information but occupies too much time. Moreover, the number of command types in 802.15.3 is totally 32, and the current MAC throughput will get much degraded when a great many of commands compete for transmission. Therefore, we propose a command-aggregation method which is more suitable for our scheduling scheme and physical layer technology.

1. The CAP in 802.15.3 MAC superframe is separated into two parts: CAP1 and CAP2. During the CAP1, the devices send request commands to the PNC or they send asynchronous data to other devices. During the CAP2, the PNC will process these requests and send back all the response commands in one aggregated MAC frame. When a DEV wants to send several request commands to the PNC, all request frame payloads are aggregated in one frame body in MSDU payload with a common PLCP header and PLCP preamble in PLCP sub layer, showed in Fig. 2. Similarly, the PNC does the same operation when it responds to these requests to the devices. However, rather than respond to the requests immediately, the PNC accepts all the requests from the devices and remembers where the requests come from, then sends a single response command as a multicast frame in CAP2 (Fig. 3).

2. When a device wants to send asynchronous data information to another device, it inserts its payload (not including MAC header) of request commands before the real asynchronous data frame body (showed in Fig. 4). The DESTID field in MAC header is still the device which the source device wants to communicate with. A new field should be added to MAC header to specify whether a request command sub-frame is inserted, and to inform both the destination device and the PNC. When the destination

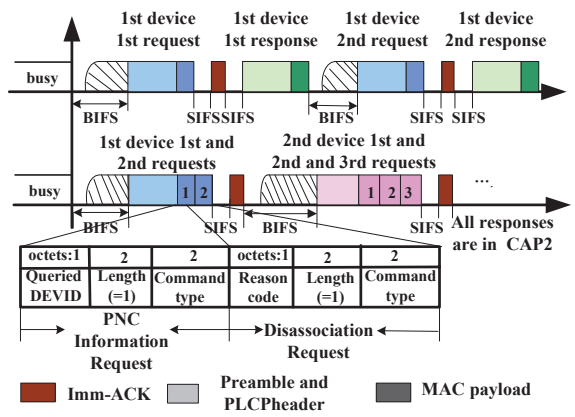

Figure 2. Comparison of the current 802.15.3 mechanism in CAP and our proposal.

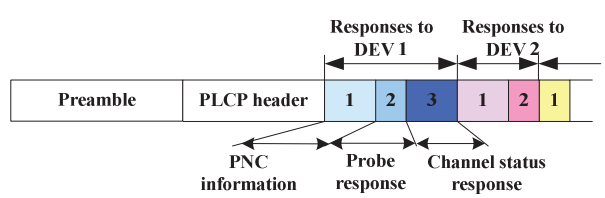

Figure 3. The response command sent by the PNC in CAP2.

Authorized licensed use limited to: Goodwin Procter LLP. Downloaded on December 19,2024 at 15:47:44 UTC from IEEE Xplore. Restrictions apply.

INTEL-1018
U.S. Patent 9,265,043

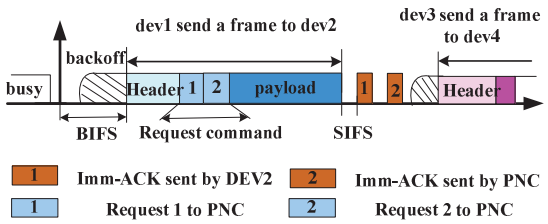

Figure 4. Requests in the asynchronous data frame.

device receives the frame, it examines this new field and realizes the start bits of its own data information. The PNC is ready to receive the physical symbols all the time in CAP no matter what the DESTID is. On receiving this type of frame (DESTID is not the PNC), it checks the new field. If it shows that there is a request in frame body, the demodulation of the following symbols should be going on. Other information will be defined in this field to inform the PNC to stop demodulation after acquiring the request information and defer receiving until the end of the following data transmission.

3. The retransmission and Imm-ACK have been also considered in our scheme. When the PNC has received the request inserted as a sub frame overload in the frame, it delays a little time to send ACK back to avoid collision. If any transmission fails, the source DEV will insert the request in next frame.

3.2 Throughput Analysis

Based on the above modifications, we focus on the improvement in terms of throughput during the CAP. We define system throughput S as the fraction of time the channel is used to successfully transmit payload bits [15]. S can be expressed as the ratio:

$$S = \frac{E[\text{payload information transmitted in a slot time}]}{E[\text{ length of a slot time}]} \tag{4}$$

Let E[P] be the average packet payload size.
Let P_{tr} be the probability that there is at least one transmission in the slot time.
Let P_s be the probability that a transmission occurring on the channel is successful.
Let T_s be the average time the channel is sensed busy.
Let T_c be the average time the channel is sensed busy by each device during a collision.
Let $H = PHY_{hdr} + MAC_{hdr}$, and δ represent the propagation delay.
Hence, S can be calculated as:

$$S = \frac{P_s P_{tr} E[P]}{(1-P_{tr})\sigma + P_{tr} P_s T_s + P_{tr}(1-P_s)T_c} \tag{5}$$

T_s and T_c can be expressed as:

$$\begin{cases} T_s = H + E[P] + SIFS + \delta + ACK + DIFS + \delta \\ T_c = H + E[P] + DIFS + \delta \end{cases} \tag{6}$$

We adjust the parameter positions and rewrite S:

$$S = \frac{P_s P_{tr}}{(1-P_{tr})\frac{1}{E[P]} + P_{tr}P_s\left[\frac{H}{E[P]} + 1 + \frac{SIFS + 2\delta + ACK + DIFS}{E[P]}\right] + P_{tr}(1-P_s)\left[\frac{H}{E[P]} + 1 + \frac{DIFS + \delta}{E[P]}\right]} \tag{7}$$

Eq. (7) accounts for the fact that when all the values of other parameters don't change, throughput S is determined by the ratio of H and E[P]. It can be seen from 1 to 3 that the main idea of the enhanced scheme is to reduce the overall length of H largely compared to E[P] during the whole CAP. Therefore, the performance of throughput S can be significantly increased.

IV Performance Evaluation

Table 2 is the required parameters of IEEE 802.15.3 that we have used for the simulations. In Fig. 5, we compare the average waiting time of the proposed scheduling scheme with the existing methods. Assume that the duration of the superframe in IEEE 802.15.3 is 20ms and average arriving rate of traffic is in the range of (100, 200)/s. In the Fig. 5, the blue curve represents the average waiting time of existing method in IEEE 802.15.3 when the number of channel c is 8, and the red curve represents the results of the proposed scheduler when c is 10. Clearly, the waiting time under our scheme is smaller than that of the system without implementing it. The performance is improved dramatically when c increases. It is obvious that in the case of c=16, the maximum gains can be obtained (see the green graph), which illustrates our scheduling scheme performs very well at that time and achieves significantly good results. In Fig. 6, we obtain the trend of the average waiting time

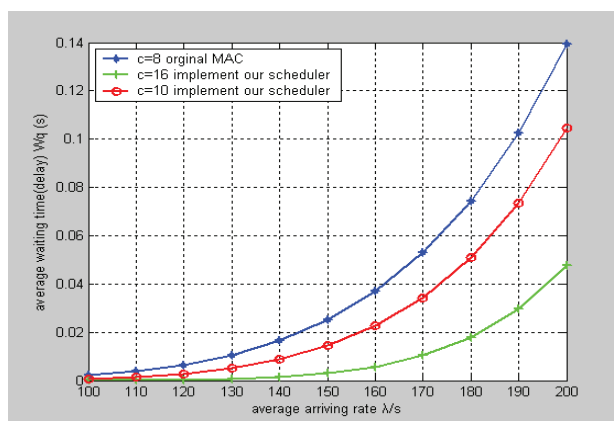

Figure 5. Comparison of average waiting time for different average arriving rates.

Authorized licensed use limited to: Goodwin Procter LLP. Downloaded on December 19,2024 at 15:47:44 UTC from IEEE Xplore. Restrictions apply.

INTEL-1018
U.S. Patent 9,265,043

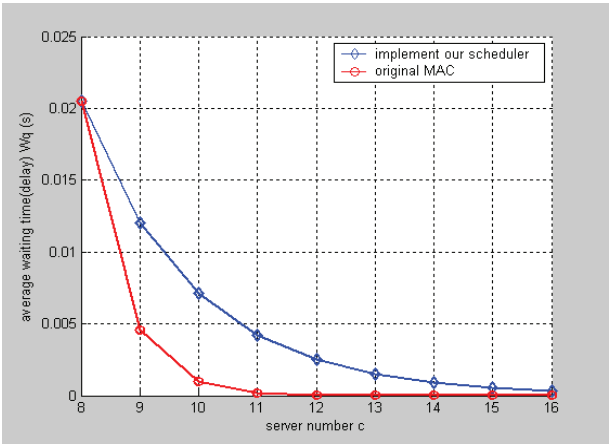

Figure 6. Comparison of average waiting time for different server numbers.

under the proposed scheduling scheme. We find that the reducing trend will not be affected by the increase of service time. On the other hand, W_q of the proposed scheme reduces more slowly than that of the existing method, which reflects the degradation brought by the average service time μ^{-1}. All the above results have explained and proved our theoretical analyses in Section II. The performance evaluation confirms that the average waiting time is reduced by 43.87% compared with the existing MAC mechanism.

V CONCLUSIONS

In this paper, in order to provide efficiently differentiated QoS support, an M/M/c queuing model based on 802.15.3 MAC mechanism is applied to HR WPAN and a scheduling scheme is derived according to it. Based on the results of analyses, we conclude that the scheme can minimize the average packet delay, as well as satisfy the requirements of different QoS traffic. Moreover, to accommodate our scheduling scheme, a command-aggregation scheme is proposed to achieve higher throughput and channel utilization. Both results are proved to be useful for practical implementation.

ACKNOWLEDGEMENTS

The work was supported by Sixth Framework Programme, Project – "My personal Adaptive Global NET (MAGNET)" of European Union under Contract no. 507102, and by the National Science Foundation Council of P. R. China under Grant 60272053.

REFERENCES

[1] J. Karaoguz, "High-Rate Wireless Personal Area Networks," IEEE Communication Magazine, vol. 39, no. 12, pp. 96 - 102, Dec. 2001.

[2] IEEE 802.15 TG3, "IEEE Standard for Information Technology - Telecommunications and Information Exchange Between Systems - Local and Metropolitan Area Networks - Specific Requirements Part 15.3: Wireless Medium Access Control (MAC) and Physical Layer (PHY) Specifications for High Rate Wireless Personal Area Networks (WPANs)," Sep. 2003.

[3] Changlei Liu, K. L. Yeung and V. O. K Li, "A Novel MAC Scheduling Algorithm for Bluetooth System," Proc. of GLOBECOM 2003, vol. 1, pp. 86 - 91, Dec. 2003.

[4] Yunxin Liu, Qian Zhang and Wenwu Zhu, "A Priority-based MAC Scheduling Algorithm for Enhancing QoS Support in Priority-based Piconet," Proc. of 2002 IEEE Conference on Communications, Circuits and Systems and West Sino Expositions, vol. 1, pp. 544 – 548, July 2002.

[5] L. Jacob, R. Radhakrishna Pillai and B. Prabhakaran, "MAC Protocol Enhancements and a Distributed Scheduler for QoS Guarantees over the IEEE 802.11 Wireless LANs," Proc. of IEEE VTC 2002-Fall, vol. 4, pp. 2410 – 2413, Sept. 2002.

[6] R. Cusani, F. Delli Priscoli, G. Ferrari and M. Torregiani, "A Novel MAC and Scheduling Strategy to Guarantee QoS for the New-Generation WIND-FLEX Wireless LAN," IEEE Wireless Communications, vol. 9, no. 3, pp. 46, June 2002.

[7] L. W. Lim, R. Malik, P. Y. Tan, C. Apichaichalermwongse, K. Ando and Y. Harada, "A QoS Scheduler for IEEE 802.11e WLANs," Proc. of CCNC 2004, pp. 199 – 204, Jan. 2004.

[8] A. Baiocchi, F. Cuomo and S. Bolognesi, "IP QoS Delivery in a Broadband Wireless Local Loop: MAC Protocol Definition and Performance Evaluation," IEEE Journal on Selected Areas in Communications, vol. 18, no. 9, pp. 1608 - 1622, Sept. 2000.

[9] H. Luo, P. Medvedev, J. Cheng, and S. Lu, "A Self Coordinating Approach to Distributed Fair Queuing in Ad Hoc Wireless Networks," Proc. of IEEE InfoCom 2001, Anchorage, AK, Apr. 2001.

[10 N. Vaidya, P. Bahl and S. Gupta, "Distributed Fair Scheduling in a Wireless LAN," Proc. of ACM MobiCom, Boston, MA, Aug. 2000.

[11] R. Mangharam and M. Demirhan, "Performance and Simulation Analysis of 802.15.3 QoS," IEEE 802.15-02/297r1, Jul. 2002.

[12] Yi-Hsien Tseng, Eric Hsiao-kuang Wu and Gen-Huey Chen, "Maximum Traffic Scheduling and Capacity Analysis for IEEE 802.15.3 High Data Rate MAC Protocol," Proc. of IEEE VTC 2003-Fall, vol. 3, pp. 1678 - 1682, Oct. 2003.

[13] Seung Hyong Rhee, Kwangsue Chung, Yongsuk Kim, Wonyong Yoon and Ki Soo Chang, "An Application-Aware MAC Scheme for IEEE 802.15.3 High-Rate WPAN," Proc. of WCNC 2004, vol. 2, pp. 1018 - 1023, March. 2004.

[14] J. Balakrishnan, A. Batra and A. Dabak, "A Multi-band OFDM System for UWB Communication," Proc. of 2003 IEEE Conference on Ultra Wideband Systems and Technologies, pp. 354 - 358, Nov. 2003.

[15] G. Bianchi, "Performance Analysis of the IEEE 802.11 Distributed Coordination Function," IEEE Journal on Selected Areas in Communications, vol. 18, pp. 535 - 547, March. 2000.

Authorized licensed use limited to: Goodwin Procter LLP. Downloaded on December 19,2024 at 15:47:44 UTC from IEEE Xplore. Restrictions apply.

INTEL-1018
U.S. Patent 9,265,043