# Exhibit C

**U.S. PATENT NO. 9,265,043**
**PRELIMINARY INFRINGEMENT CONTENTIONS[1]**

**DYNAMIC REAL-TIME TIERED CLIENT ACCESS**

**INFRINGEMENT BY INTEL'S ACCUSED GATEWAY PRODUCTS, INTEL'S ACCUSED ADAPTER PRODUCTS, AND INTEL'S ACCUSED WI-FI INTEGRATED PROCESSORS**

| **Claim[2]** | | Infringement |
|---|---|---|
| 1 | A method of facilitating wireless data exchange between a first portable client device and a fixed location proximity reader, comprising: | Intel processors and wireless adapters utilizing Wi-Fi 6 and/or 6E including, but not limited to, the AX101, AX200, AX201, AX210, AX211, AX411 adapters, and Intel wireless adapters utilizing Wi-Fi 7 including, but not limited to, the BE200 and BE202 adapters (collectively, Intel's Accused Adapter Products), and Intel's 10th to current generation processors with integrated Wi-Fi 6 and above, as well as the Intel® Home Wi-Fi Chipset WAV600 Series, including the WAV654, (Intel's Accused Gateway Products) which are included in Intel-based Wi-Fi 6 routers and gateways, employ a method of facilitating data wireless data exchange between a first portable client device and a fixed location proximity reader by virtue of orthogonal frequency division multiple access (OFDMA). |
| | determining a first specified time slot based on | Intel processors and wireless adapters utilizing Wi-Fi 6 and/or 6E including, but not limited to, the AX101, AX200, AX201, AX210, AX211, AX411 adapters, and Intel wireless adapters utilizing Wi-Fi 7 including, but not limited to, the BE200 and BE202 adapters (collectively, Intel's Accused Adapter Products), and Intel's 10th to current generation processors with integrated Wi-Fi 6 and above, as well as |

[1] The Preliminary Infringement Contentions (PICS) provided herein are based on information obtained to date and may not be exhaustive. Plaintiff's investigation of Defendants' infringement is ongoing. Plaintiff reserves the right to supplement and/or amend these PICS to identify additional instrumentalities and to further identify where each element of each claim is found in each accused instrumentality, including on the basis of discovery obtained from Defendant, and from third parties during the course of this litigation, pursuant to ¶2 of the Order Governing Proceedings –Patent Cases under Hon. Alan D. Albright.
[2] All PICS set forth herein for any independent patent claims are hereby incorporated by reference into the PICS alleged for any dependent patent claims that depend on such independent claims, as if fully set forth therein



INTEL-1015
U.S. Patent 9,265,043

| | | |
|---|---|---|
| | synchronization information wirelessly received by the first portable client device and priority level data associated with a first class, wherein the first class is associated with one or more of the first portable client device and a user of the first portable client device; | the Intel® Home Wi-Fi Chipset WAV600 Series, including the WAV654, (Intel's Accused Gateway Products) which are included in Intel-based Wi-Fi 6 routers and gateways, determine a first specific time slot for the device in which they are installed (e.g., a laptop) by way of orthogonal frequency division multiple access (OFDMA), which divides the available band into sub-carriers and the transmission window into timeslots. See e.g. What is Wi-Fi 6, Intel, available at https://www.intel.com/content/www/us/en/gaming/resources/wifi-6.html ("Wi-Fi 6 can be faster due to technologies like … OFDMA…")<br><br>Pictorial representations of OFDMA are shown below:<br><br> 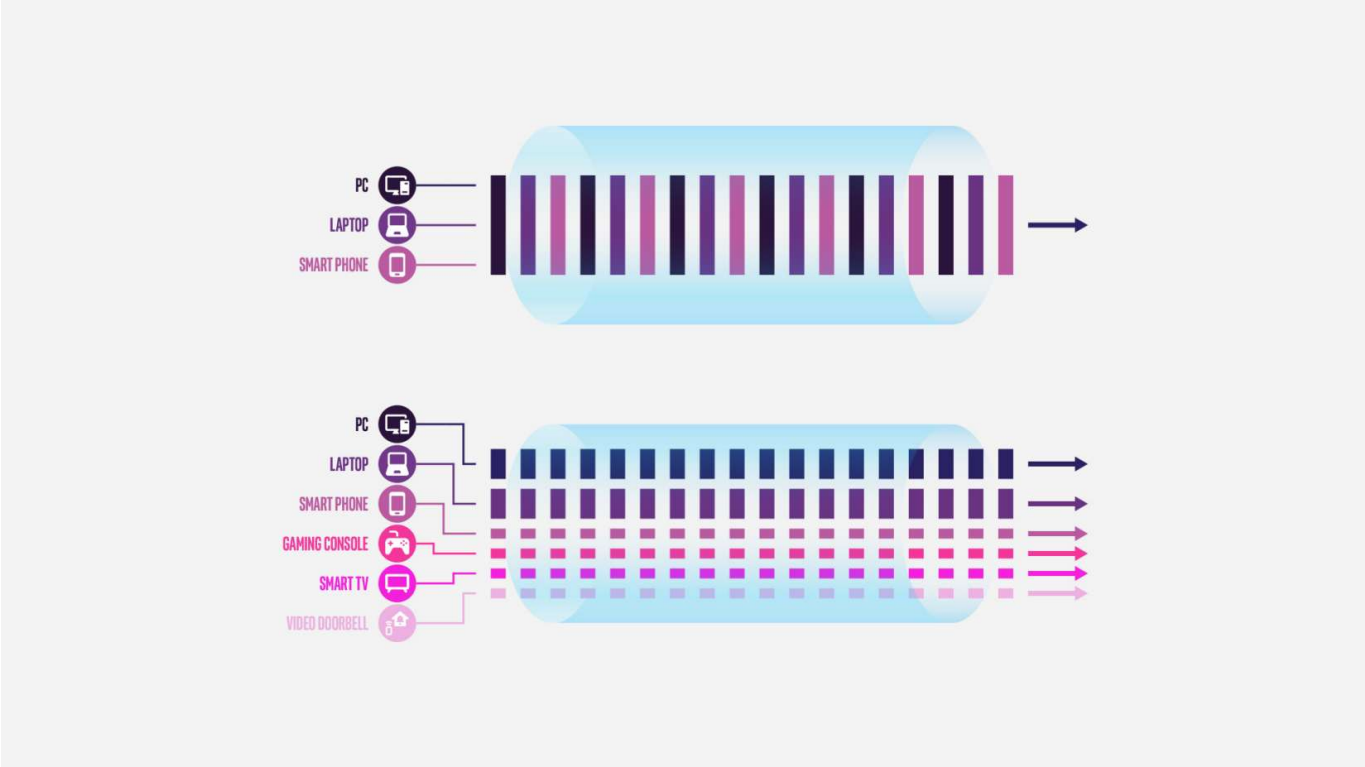 <br>https://www.intel.com/content/www/us/en/gaming/resources/wifi-6.html |

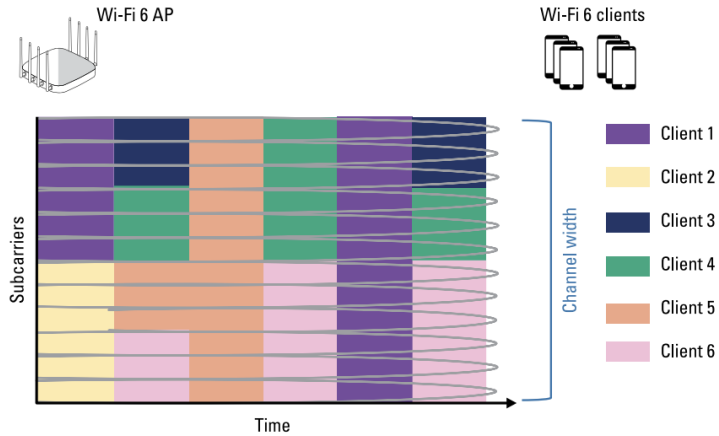


https://www.hitchhikersguidetolearning.com/2023/03/30/resource-units-in-802-11ax/ (citing WiFi 6 for Dummies).

Wi-Fi 6 (and later) compliant client devices, which utilize Intel's Wi-Fi 6 (or later) chips and adapters (i.e., the accused products), each represented by a different color in the second figure, wirelessly broadcast their data to a fixed proximity reader device, i.e., a Wi-Fi 6 access point with an Intel wireless adapter, or Intel-based Wi-Fi 6 routers and gateways, during one of six timeslots and using one of twelve different sub-carriers.

Intel describes that "OFDMA works by subdividing channels into subcarriers and allowing for transmission to multiple endpoints (devices) at the same time." https://www.intel.com/content/www/us/en/gaming/resources/wifi-6.html. "This results in a single transmission from the [access point] being able to communicate with multiple devices, instead of each device having to wait its turn as the [access point] serves up the data across the network."

The figure below shows the procedure by which the devices broadcast and the subcarrier is determined:

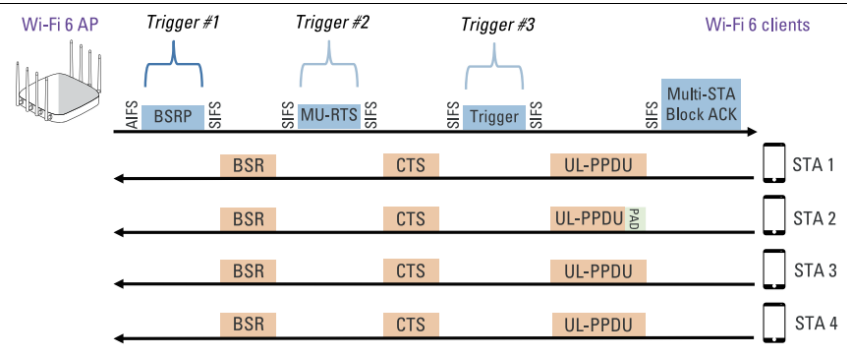


See https://cradtech.com/2018/10/25/802-11ax-ofdma-overview/.

As shown, the access point (i.e., device with an Intel Wi-Fi 6 or above chip/adapter in "access point" mode or Intel-based Wi-Fi 6 routers and gateways, utilizing Intel's Accused Gateway Products, first sends out a buffer status report poll (BSRP) to all devices requesting they report back, among other things, the quality of service (QoS) category, i.e. a first class, of the data they need to send. See e.g. https://wballiance.com/wp-content/uploads/2019/07/Wi-Fi-6-Deployment-Guidelines-and-Scenarios-V1.0.pdf. This is provided in each device's buffer status report (BSR). Based on the BSR, devices with Wi-Fi 6 (and later) adapters will be assigned a subcarrier on which they will transmit data and communicate this data using Trigger #3. Thus, the first time slot of OFDMA uplink transmission of a client device, i.e. using a Wi-Fi 6, or later, adapter like Intel's accused products, is set according to synchronization information wirelessly received by a first client device and priority level data associated with a first class of QoS.

Further, notwithstanding the above figure which show a traditional router, either Intel-based Wi-Fi 6 routers and gateways, or devices utilizing Intel adapters providing Wi-Fi 6 and above with OFDMA functionality themselves may function as an access point and, for example, send out the buffer status report poll. See https://www.intel.com/content/dam/www/central-libraries/us/en/documents/2022-06/wi-fi-tutorial-long.pdf. Intel's Wi-Fi 6, 6E, and 7 compatible devices are designed to carry out the claimed limitations.

In OFDMA, the class of QoS data a device must send is associated with both the device and the user. Data to be sent from a device will be associated with the device in that it originates from the device,

| | | |
|---|---|---|
| | | specifically applications the device is running. The data is also associated with the user in that the user is interacting with the application to create the data that needs to be sent. |
| | assigning the first specific time slot for the first portable client device to wirelessly communicate with a fixed location proximity-based reader device; | The first timeslot of the transmission window for communication with a Wi-Fi 6 access point (i.e., device with an Intel chip/adapter in "access point" mode or Intel-based Wi-Fi 6 routers and gateways will be assigned to a first client device, i.e. with an Intel wireless adapter. |
| | determining a change in network traffic; | Prior to each transmission of data, the procedure shown in the figure below will be repeated.<br> 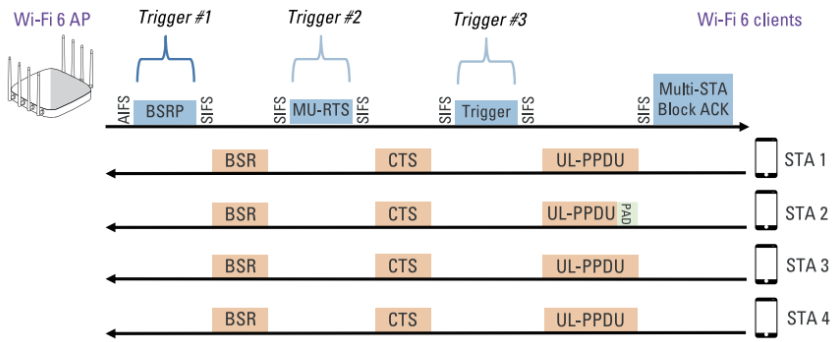 <br><br>During each repetition, the router first sends out a buffer status report poll (BSRP) to all devices requesting they report back, among other things, the quality of service (QoS) category of the data they need to send. Such is provided in each device's buffer status report (BSR). After receiving BSR's, the Wi-Fi 6 router will determine when and on which subcarrier each device should transmit their data and then communicate this data using Trigger #3. Thus, a change in network traffic will be determined during each repetition. Thus, the first time slot of OFDMA uplink transmission will be reassigned each repetition set according to QoS data indicated in the BSR. |

| | | |
|---|---|---|
| | unassigning, responsive to the change in the network traffic, the first specific time slot to which the first portable client device is assigned to wirelessly communicate with a fixed location proximity reader based on the priority level data associated with the first class associated with one or more of the first portable client device and the user of the first portable client device. | When the QoS level of the first device falls below that of other connected devices, the other devices will be assigned a higher priority and thus receive the first time slot. |