US008219129B2

(12) **United States Patent**
Brown et al.

(10) **Patent No.: US 8,219,129 B2**
(45) **Date of Patent: Jul. 10, 2012**

(54) **DYNAMIC REAL-TIME TIERED CLIENT ACCESS**

(75) Inventors: **David L. Brown**, Jupiter, FL (US); **Fred S. Hirt**, Brookfield, IL (US)

(73) Assignee: **Proxense, LLC**, Bend, OR (US)

(*) Notice: Subject to any disclaimer, the term of this patent is extended or adjusted under 35 U.S.C. 154(b) by 996 days.

(21) Appl. No.: **11/620,577**

(22) Filed: **Jan. 5, 2007**

(65) **Prior Publication Data**

US 2007/0174809 A1 Jul. 26, 2007

Related U.S. Application Data

(60) Provisional application No. 60/760,362, filed on Jan. 6, 2006.

(51) **Int. Cl.**
H04B 7/00 (2006.01)

(52) **U.S. Cl.** **455/502**; 455/503; 370/510; 370/512; 370/324; 370/350; 375/240.28

(58) **Field of Classification Search** 455/41.2, 455/3.02, 13.2, 502; 375/145, 149, 240.28, 375/293, 262, 355–357, 362–370; 370/252, 370/442, 314, 320, 350, 345, 324, 503–514
See application file for complete search history.

(56) **References Cited**

U.S. PATENT DOCUMENTS

5,307,349 A * 4/1994 Shloss et al. 370/442
5,317,572 A * 5/1994 Satoh 370/509
5,392,287 A 2/1995 Tiedemann, Jr. et al.
5,410,588 A * 4/1995 Ito 455/502
5,506,863 A * 4/1996 Meidan et al. 375/134
5,517,502 A * 5/1996 Bestler et al. 370/449
5,689,529 A * 11/1997 Johnson 375/259
5,760,705 A * 6/1998 Glessner et al. 340/7.21
6,138,010 A * 10/2000 Rabe et al. 455/426.1
6,240,076 B1 * 5/2001 Kanerva et al. 370/330
6,279,146 B1 * 8/2001 Evans et al. 716/18
6,788,924 B1 9/2004 Knutson et al.
6,795,425 B1 * 9/2004 Raith 370/345
6,879,567 B2 4/2005 Callaway et al.
6,889,067 B2 5/2005 Willey
6,891,822 B1 * 5/2005 Gubbi et al. 370/345
6,957,086 B2 10/2005 Bahl et al.
7,031,945 B1 4/2006 Donner
7,068,623 B1 * 6/2006 Barany et al. 370/329
7,130,668 B2 10/2006 Chang et al.
7,209,955 B1 * 4/2007 Major et al. 709/207
7,230,908 B2 * 6/2007 Vanderaar et al. 370/203
7,277,737 B1 10/2007 Vollmer et al.

(Continued)

OTHER PUBLICATIONS

PCT International Search Report and Written Opinion, PCT/US07/00349, Mar. 19, 2008, 10 pages.

(Continued)

Primary Examiner — Dominic E Rego
(74) *Attorney, Agent, or Firm* — Patent Law Works LLP

(57) **ABSTRACT**

Wireless client devices within a wireless network exchange data with other wireless devices during particular time slots determined by the network. More particularly, the system generates and wirelessly broadcasts synchronization information to the client devices, where the synchronization information contains individual masks to be applied to bit fields of individual client devices, where said time slots are determined in accordance with the masked bit fields. In such a manner, client devices can be coordinated to communicate with the system in a dynamic real-time tiered manner.

18 Claims, 42 Drawing Sheets

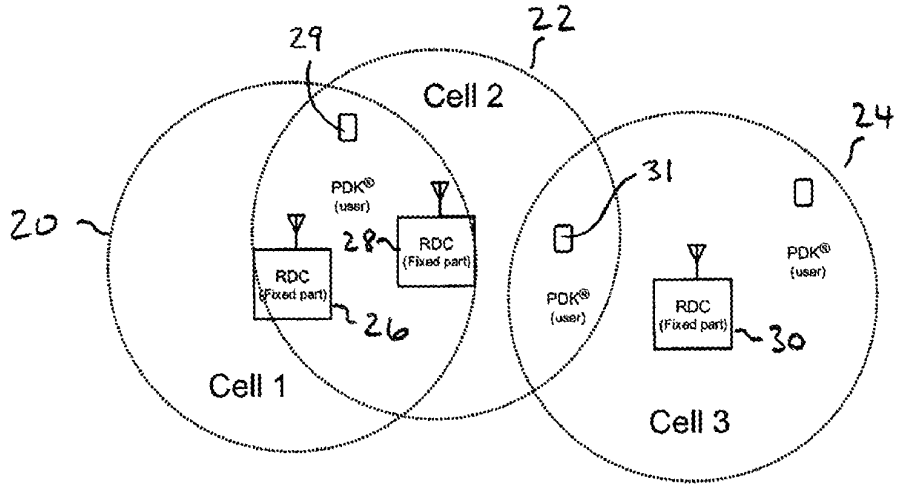

U.S. PATENT DOCUMENTS

7,460,836	B2	12/2008	Smith et al.	
7,573,841	B2	8/2009	Lee et al.	
7,583,643	B2	9/2009	Smith et al.	
7,620,184	B2 *	11/2009	Marque Pucheu	380/270
7,724,720	B2 *	5/2010	Korpela et al.	370/342
2001/0024428	A1 *	9/2001	Onouchi	370/329
2002/0022455	A1	2/2002	Salokannel et al.	
2002/0037732	A1 *	3/2002	Gous et al.	455/502
2002/0086690	A1 *	7/2002	Takahashi et al.	455/502
2002/0128017	A1 *	9/2002	Virtanen	455/452
2002/0153996	A1	10/2002	Chan et al.	
2002/0177460	A1 *	11/2002	Beasley et al.	455/502
2003/0036416	A1	2/2003	Pattabiraman et al.	
2003/0109274	A1	6/2003	Budka et al.	
2003/0117969	A1	6/2003	Koo et al.	
2003/0223394	A1 *	12/2003	Parantainen et al.	370/336
2004/0029620	A1	2/2004	Karaoguz	
2004/0029635	A1	2/2004	Giobbi	
2004/0048570	A1	3/2004	Oba et al.	
2004/0082385	A1	4/2004	Silva et al.	
2005/0040961	A1	2/2005	Tuttle	
2005/0047386	A1	3/2005	Yi	
2005/0049013	A1	3/2005	Chang et al.	
2005/0090200	A1	4/2005	Karaoguz et al.	
2005/0201389	A1 *	9/2005	Shimanuki et al.	370/395.61
2006/0025180	A1	2/2006	Rajkotia et al.	
2006/0030353	A1	2/2006	Jun	
2006/0194598	A1	8/2006	Kim et al.	
2006/0198337	A1	9/2006	Hoang et al.	
2006/0205408	A1 *	9/2006	Nakagawa et al.	455/445
2006/0238305	A1	10/2006	Loving et al.	
2006/0274711	A1 *	12/2006	Nelson et al.	370/342
2007/0008916	A1 *	1/2007	Haugli et al.	370/320
2007/0060095	A1	3/2007	Subrahmanya et al.	
2007/0174809	A1 *	7/2007	Brown et al.	717/100

OTHER PUBLICATIONS

United States Office Action, U.S. Appl. No. 11/620,603, Jan. 4, 2011, 13 pages.

* cited by examiner

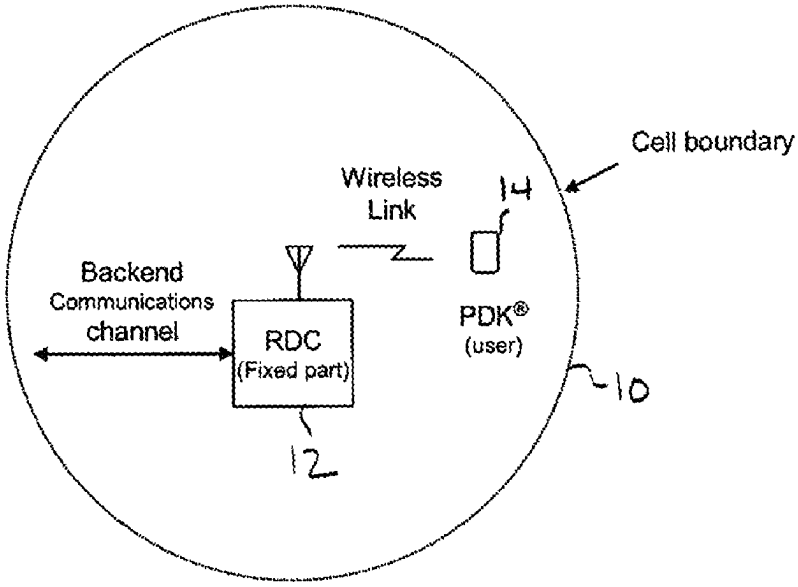

FIGURE 1

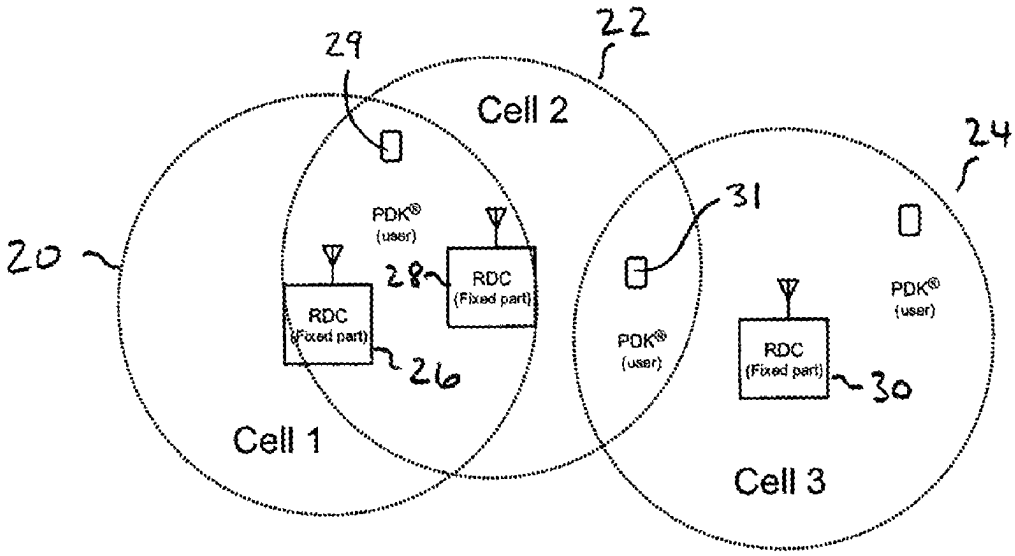

FIGURE 2

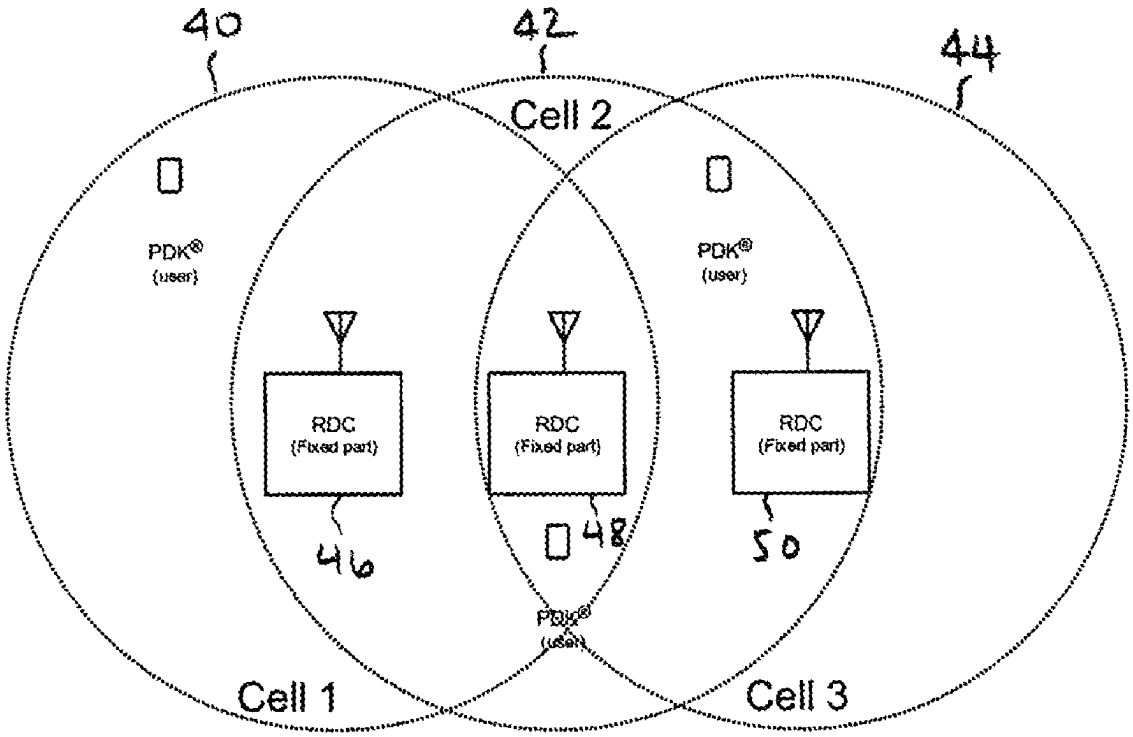
40
42
44
Cell 2
PDK®
(user)
PDK®
(user)
RDC
(Fixed part)
RDC
(Fixed part)
RDC
(Fixed part)
46
48
50
PDK®
(user)
Cell 1
Cell 3

FIGURE 3

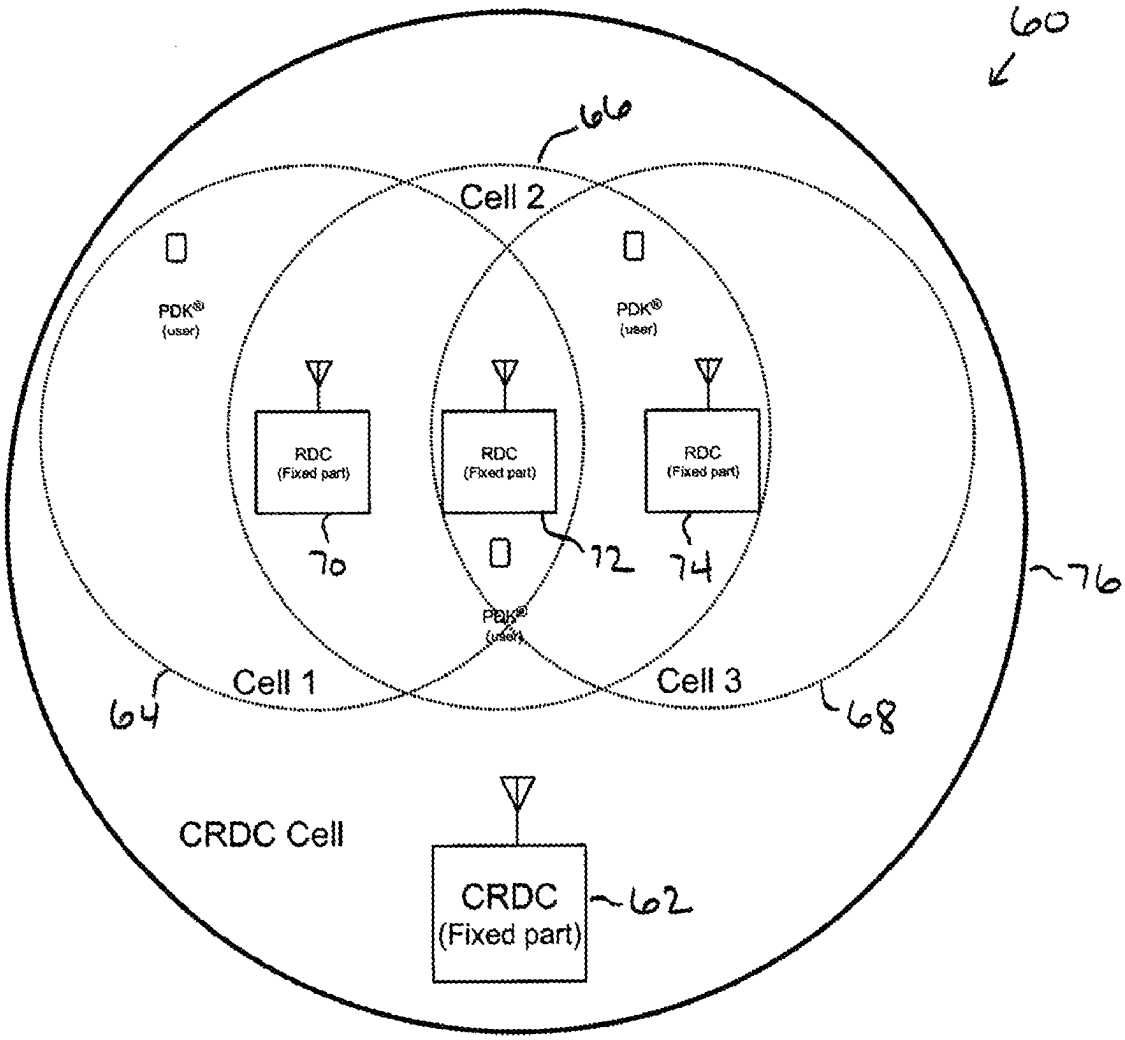
60
66
Cell 2
PDK®
(user)
PDK®
(user)
RDC
(Fixed part)
RDC
(Fixed part)
RDC
(Fixed part)
70
72
74
76
PDK®
(user)
Cell 1
Cell 3
64
68
CRDC Cell
CRDC
(Fixed part)
62

FIGURE 4

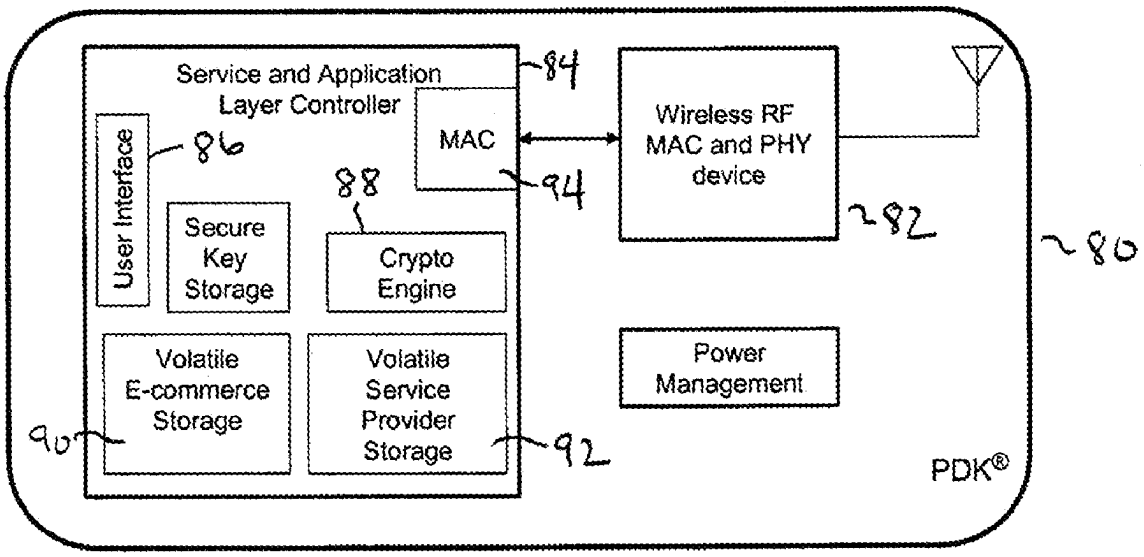
Service and Application
Layer Controller
84
MAC
94
User Interface
86
88
Secure
Key
Storage
Crypto
Engine
Volatile
E-commerce
Storage
Volatile
Service
Provider
Storage
90
92
Wireless RF
MAC and PHY
device
82
Power
Management
PDK®
80

FIGURE 5

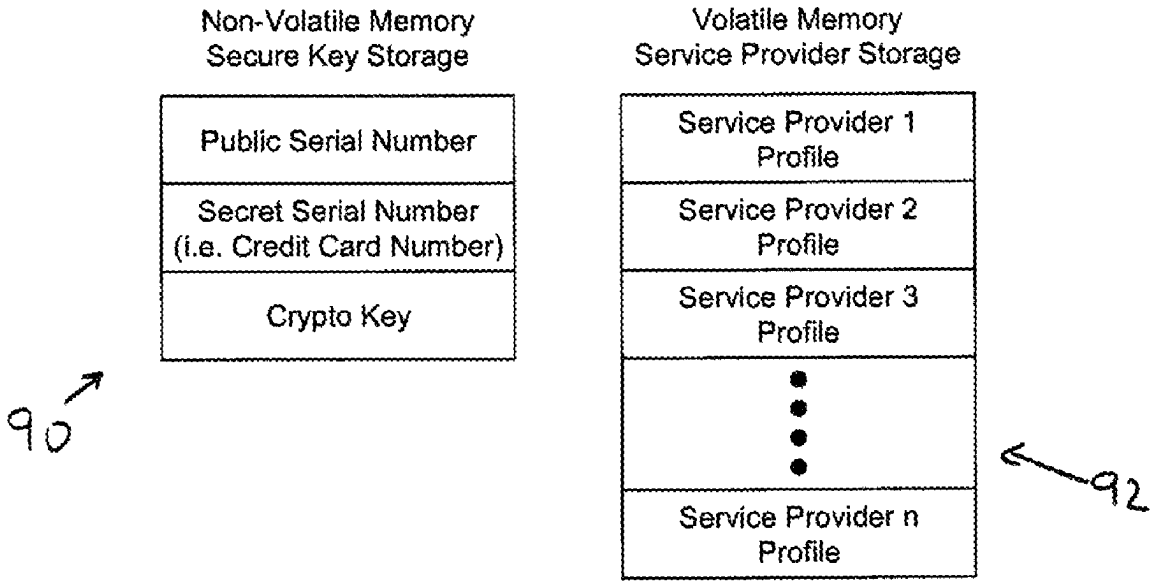
Non-Volatile Memory
Secure Key Storage
Public Serial Number
Secret Serial Number
(i.e. Credit Card Number)
Crypto Key
90
Volatile Memory
Service Provider Storage
Service Provider 1
Profile
Service Provider 2
Profile
Service Provider 3
Profile
Service Provider n
Profile
92

FIGURE 6

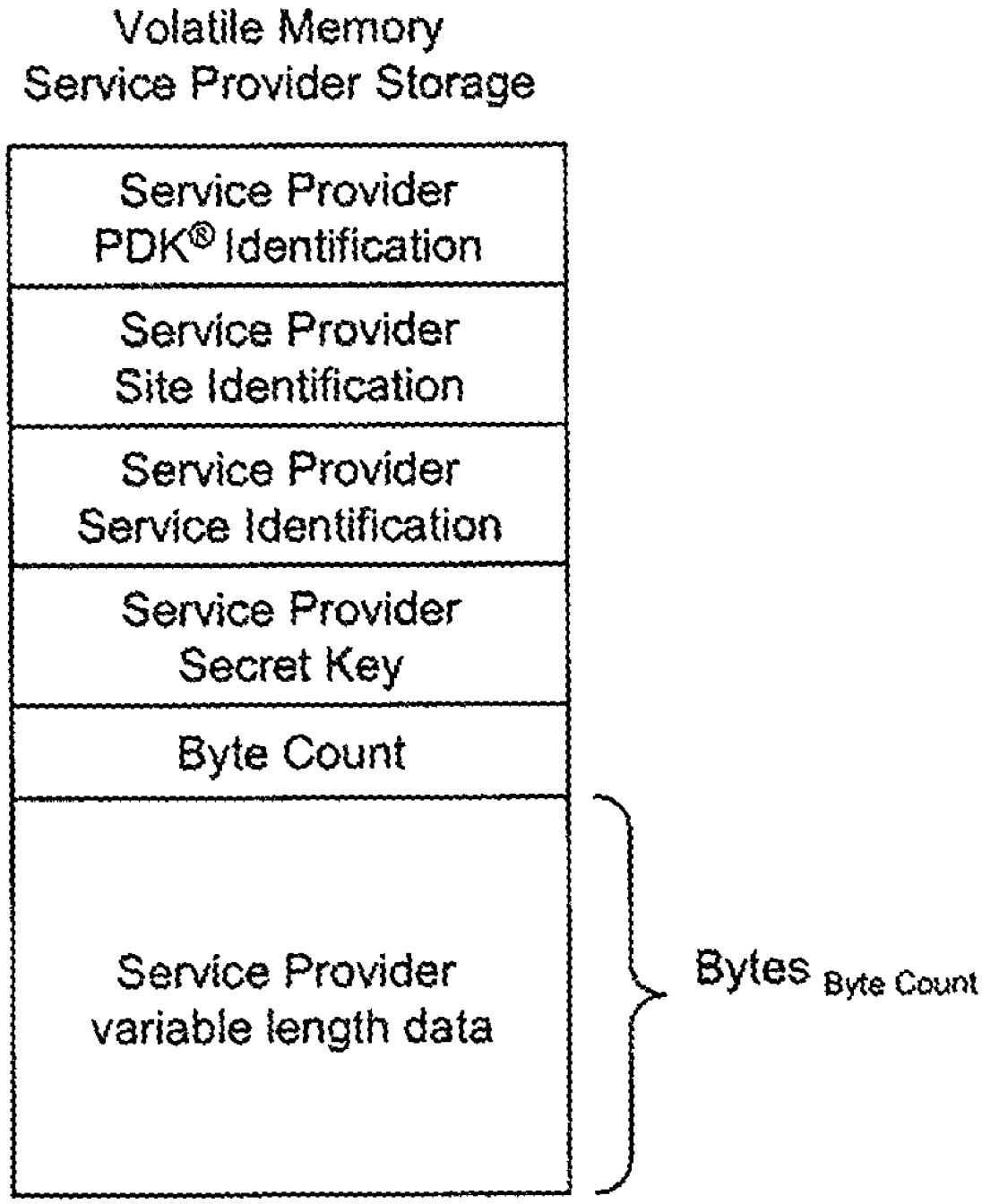
Volatile Memory
Service Provider Storage
Service Provider PDK® Identification
Service Provider Site Identification
Service Provider Service Identification
Service Provider Secret Key
Byte Count
Service Provider variable length data
Bytes Byte Count

FIGURE 7

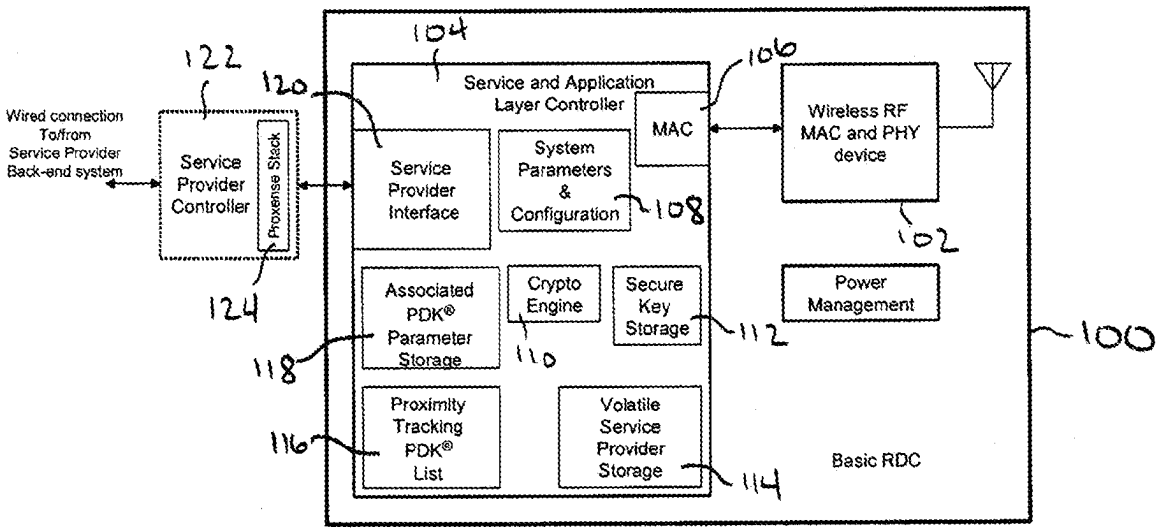
Wired connection To/from Service Provider Back-end system
Service Provider Controller
Proxense Stack
Service and Application Layer Controller
Service Provider Interface
System Parameters & Configuration
MAC
Wireless RF MAC and PHY device
Associated PDK® Parameter Storage
Crypto Engine
Secure Key Storage
Power Management
Proximity Tracking PDK® List
Volatile Service Provider Storage
Basic RDC
100
102
104
106
108
110
112
114
116
118
120
122
124

FIGURE 8

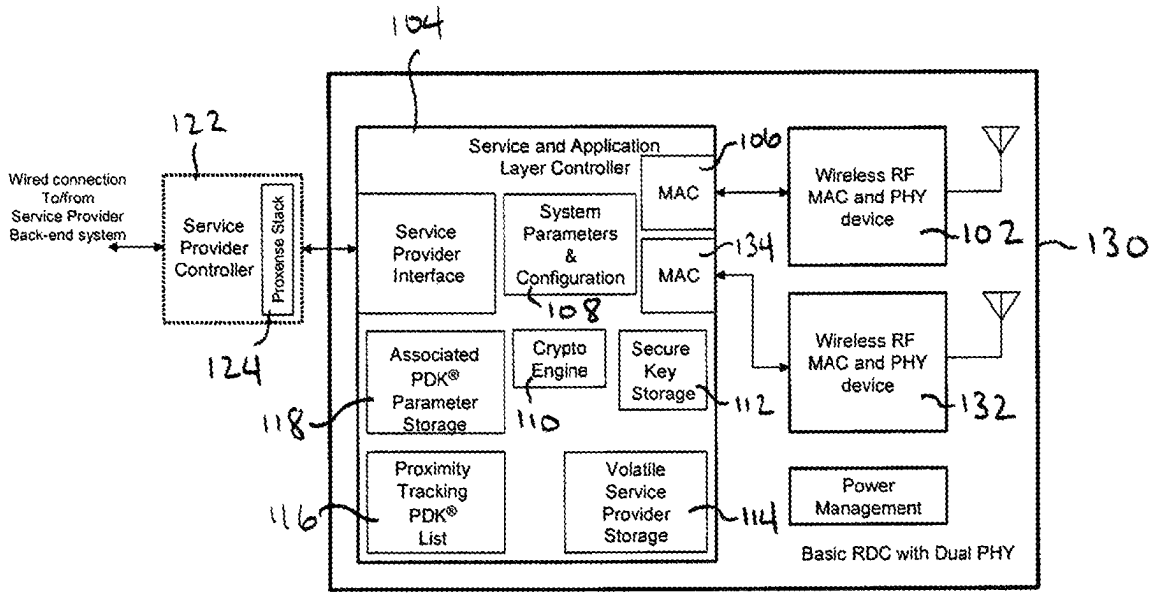
104
122
Wired connection
To/from
Service Provider
Back-end system
Service
Provider
Controller
Proxense Stack
124
Service and Application
Layer Controller
106
MAC
Service
Provider
Interface
System
Parameters
&
Configuration
108
MAC
134
Wireless RF
MAC and PHY
device
102
130
Wireless RF
MAC and PHY
device
132
Associated
PDK®
Parameter
Storage
118
Crypto
Engine
110
Secure
Key
Storage
112
Proximity
Tracking
PDK®
List
116
Volatile
Service
Provider
Storage
114
Power
Management
Basic RDC with Dual PHY

FIGURE 9

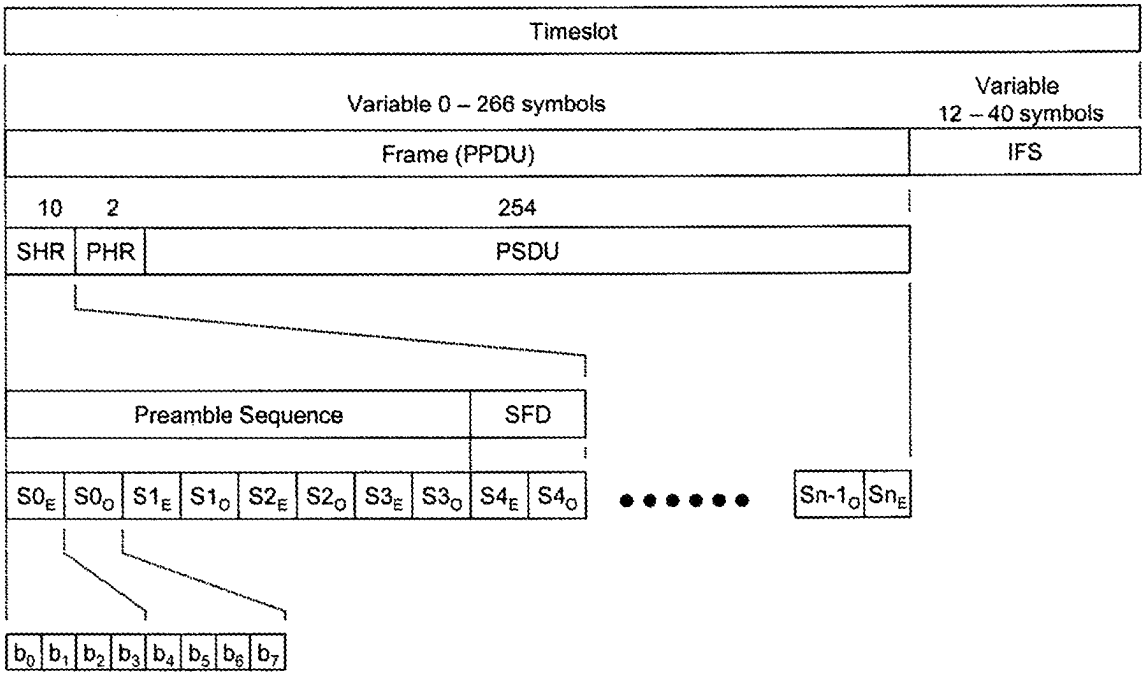
Timeslot
Variable 0 – 266 symbols
Variable
12 – 40 symbols
Frame (PPDU)
IFS
10
2
254
SHR
PHR
PSDU
Preamble Sequence
SFD
S0E
S0O
S1E
S1O
S2E
S2O
S3E
S3O
S4E
S4O
Sn-1O
SnE
b0
b1
b2
b3
b4
b5
b6
b7

FIGURE 10

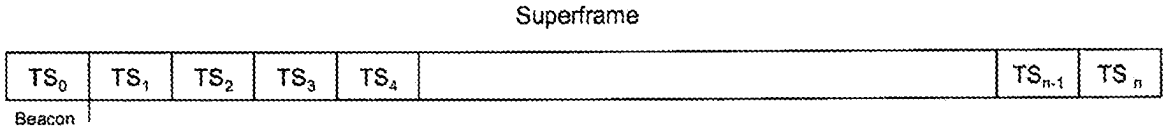

FIGURE 11

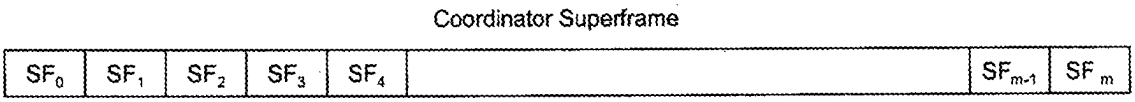

FIGURE 12

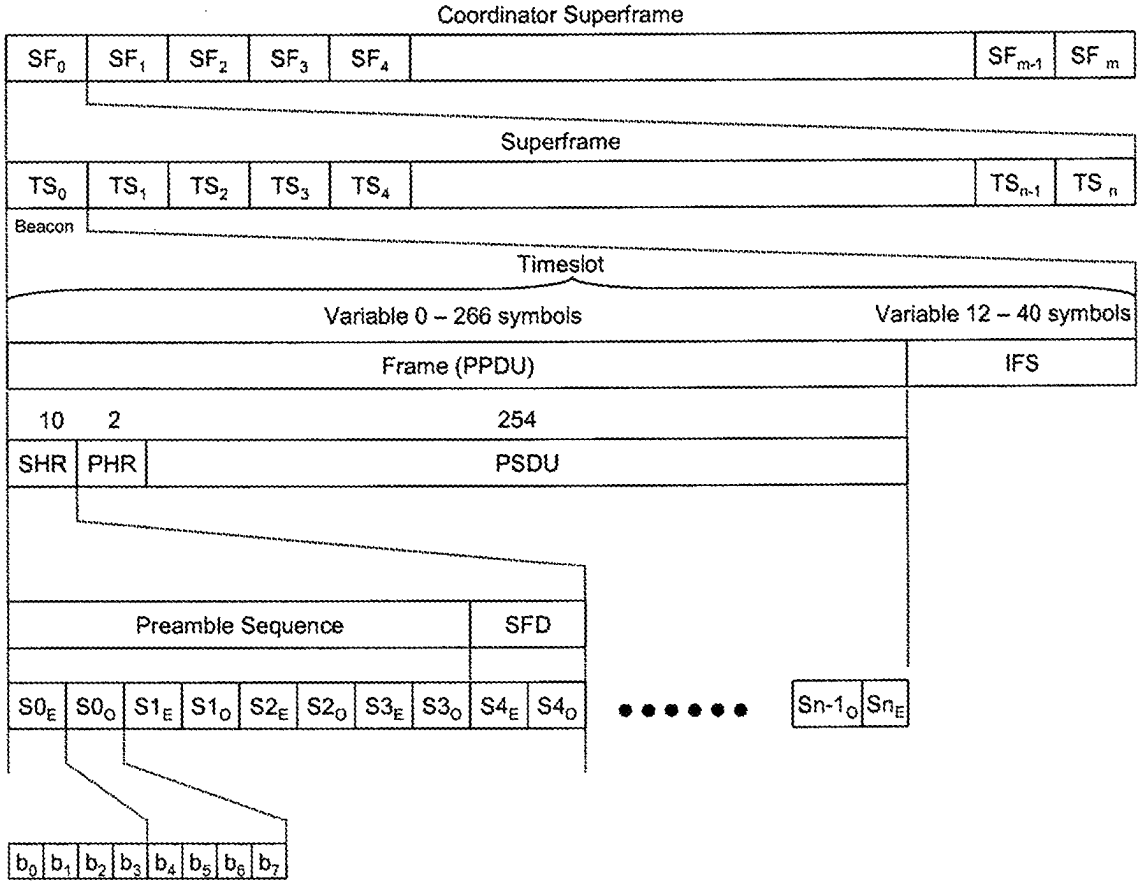
Coordinator Superframe
SF0
SF1
SF2
SF3
SF4
SFm-1
SF m
Superframe
TS0
TS1
TS2
TS3
TS4
TSn-1
TS n
Beacon
Timeslot
Variable 0 – 266 symbols
Variable 12 – 40 symbols
Frame (PPDU)
IFS
10
2
254
SHR
PHR
PSDU
Preamble Sequence
SFD
S0E
S0O
S1E
S1O
S2E
S2O
S3E
S3O
S4E
S4O
Sn-1O
SnE
b0
b1
b2
b3
b4
b5
b6
b7

FIGURE 13

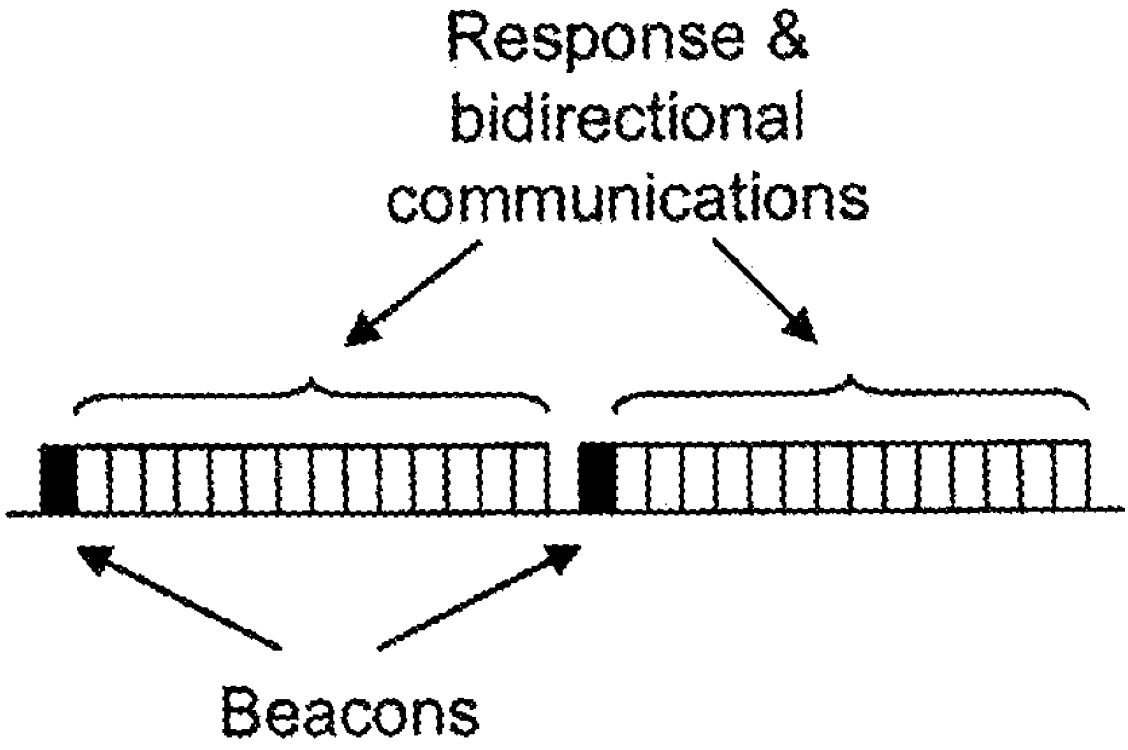

FIGURE 14

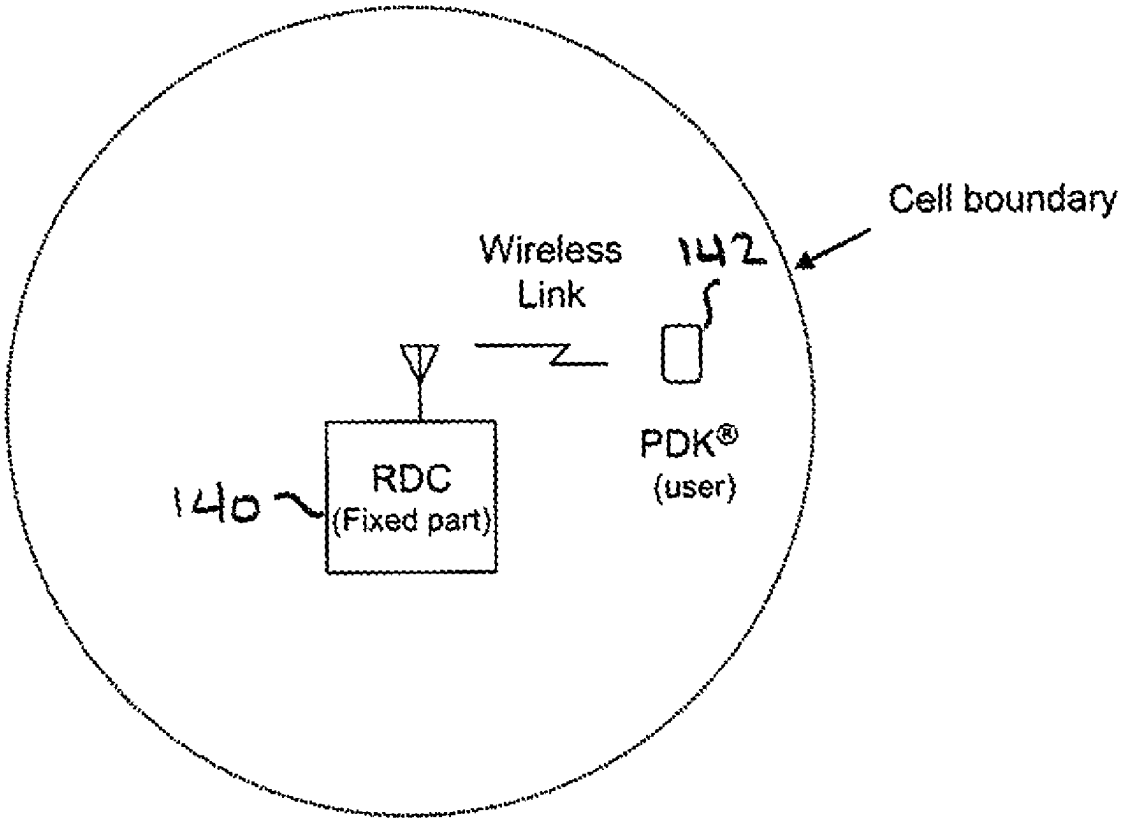

FIGURE 15

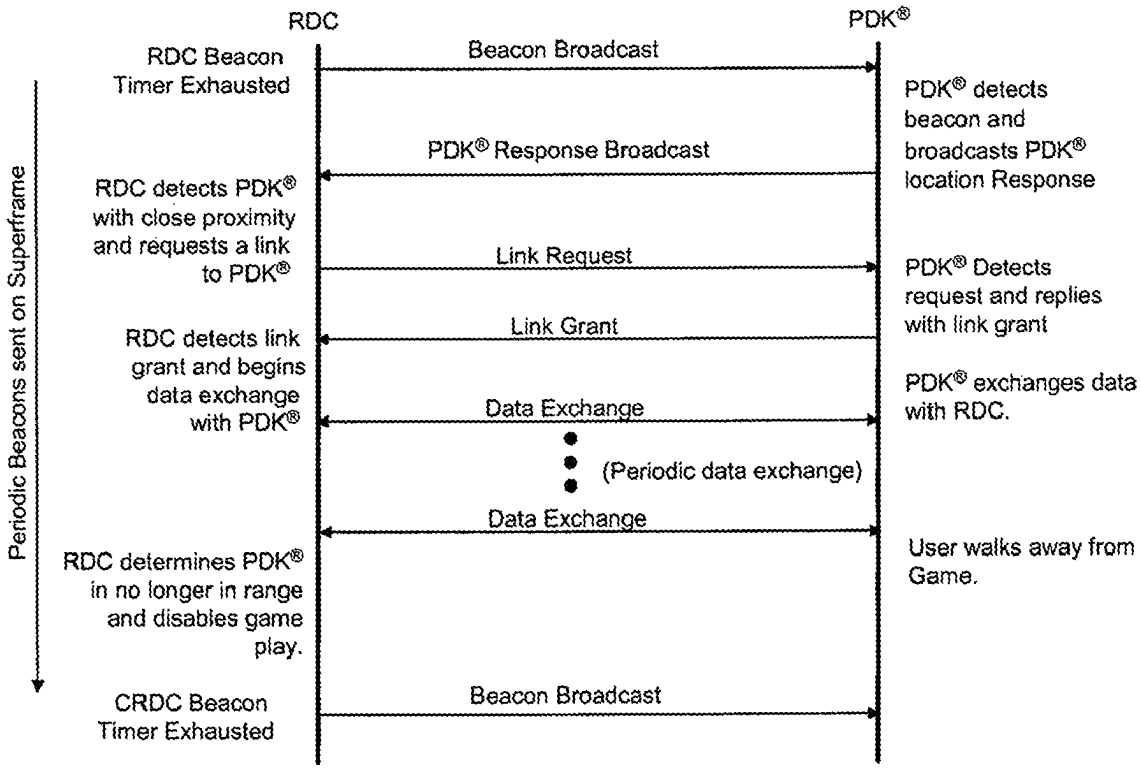
RDC
PDK®
RDC Beacon Timer Exhausted
Beacon Broadcast
PDK® detects beacon and broadcasts PDK® location Response
PDK® Response Broadcast
RDC detects PDK® with close proximity and requests a link to PDK®
Link Request
PDK® Detects request and replies with link grant
Link Grant
RDC detects link grant and begins data exchange with PDK®
PDK® exchanges data with RDC.
Data Exchange
(Periodic data exchange)
Data Exchange
User walks away from Game.
RDC determines PDK® in no longer in range and disables game play.
CRDC Beacon Timer Exhausted
Beacon Broadcast
Periodic Beacons sent on Superframe

FIGURE 16

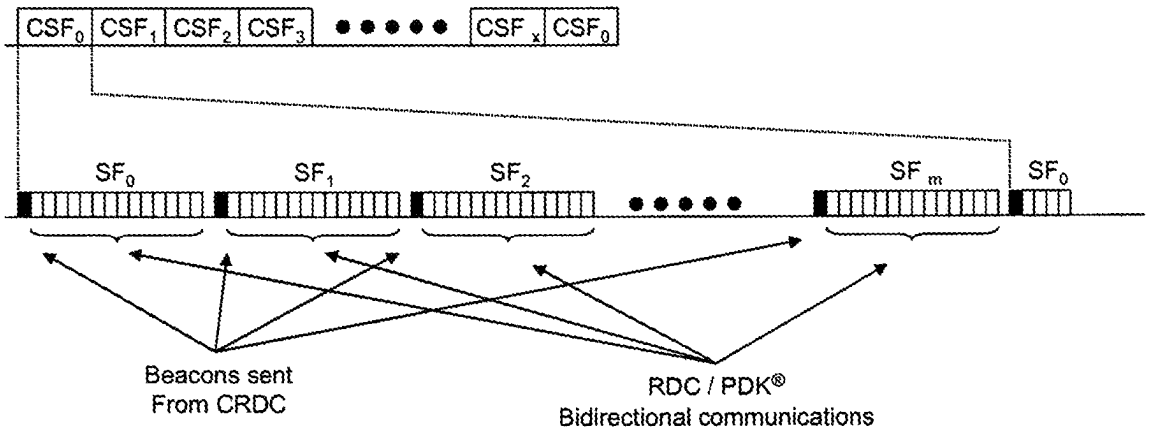
CSF0
CSF1
CSF2
CSF3
CSF x
CSF0
SF0
SF1
SF2
SF m
SF0
Beacons sent
From CRDC
RDC / PDK®
Bidirectional communications

FIGURE 17

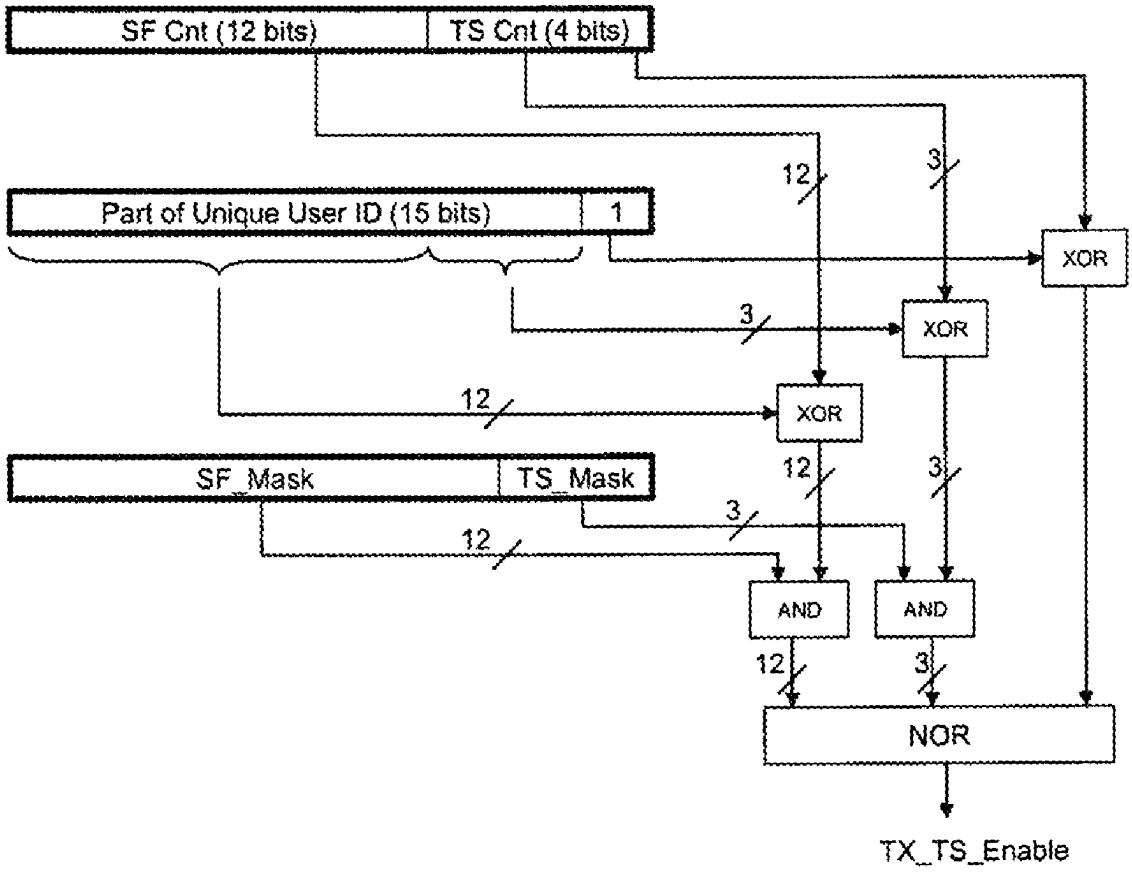
SF Cnt (12 bits)
TS Cnt (4 bits)
Part of Unique User ID (15 bits)
1
SF_Mask
TS_Mask
12
3
XOR
XOR
XOR
AND
AND
NOR
TX_TS_Enable

FIGURE 18

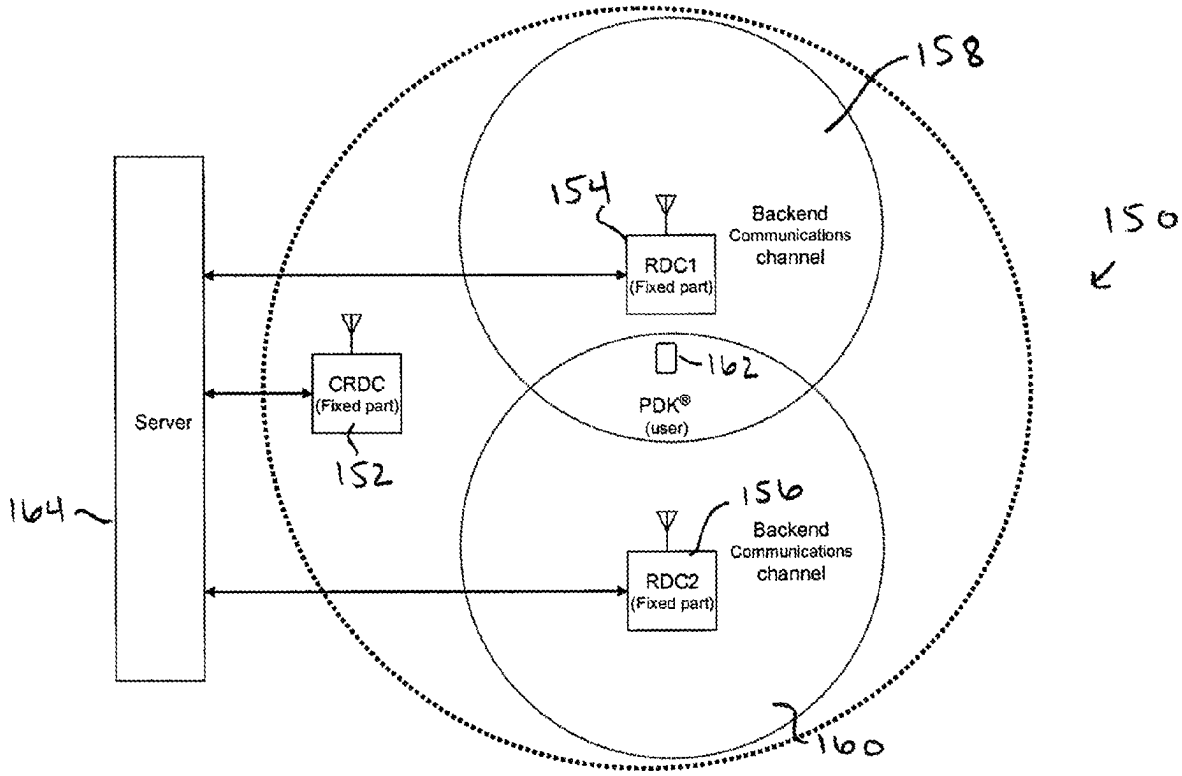
158
154
Backend
Communications
channel
RDC1
(Fixed part)
150
162
CRDC
(Fixed part)
PDK®
(user)
Server
152
164
156
Backend
Communications
channel
RDC2
(Fixed part)
160

FIGURE 19

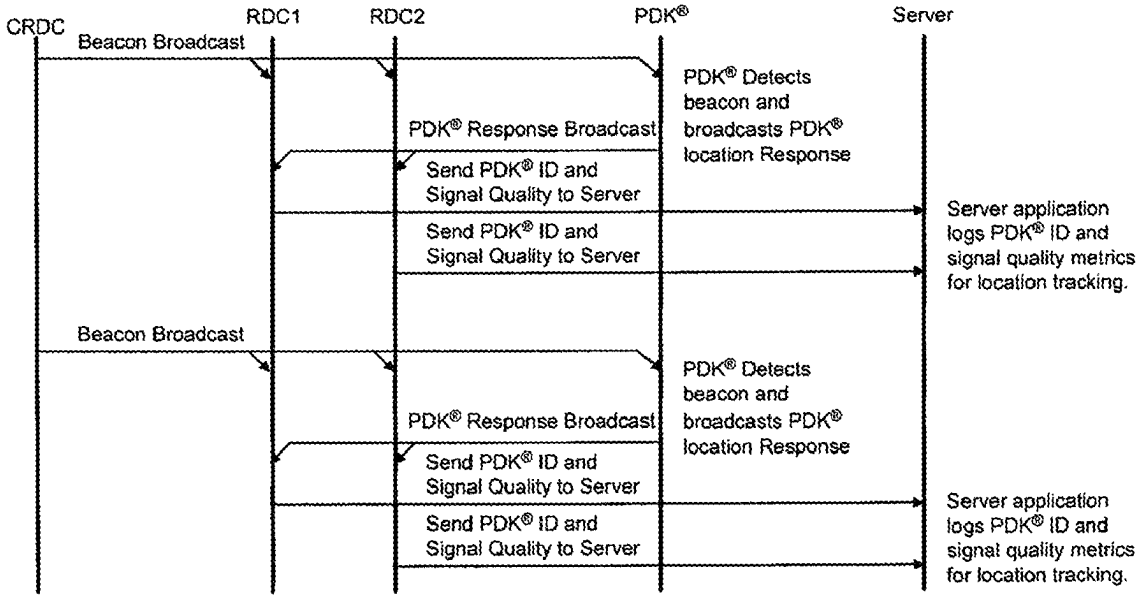
CRDC
RDC1
RDC2
PDK®
Server
Beacon Broadcast
PDK® Detects beacon and broadcasts PDK® location Response
PDK® Response Broadcast
Send PDK® ID and Signal Quality to Server
Send PDK® ID and Signal Quality to Server
Server application logs PDK® ID and signal quality metrics for location tracking.
Beacon Broadcast
PDK® Detects beacon and broadcasts PDK® location Response
PDK® Response Broadcast
Send PDK® ID and Signal Quality to Server
Send PDK® ID and Signal Quality to Server
Server application logs PDK® ID and signal quality metrics for location tracking.

FIGURE 20

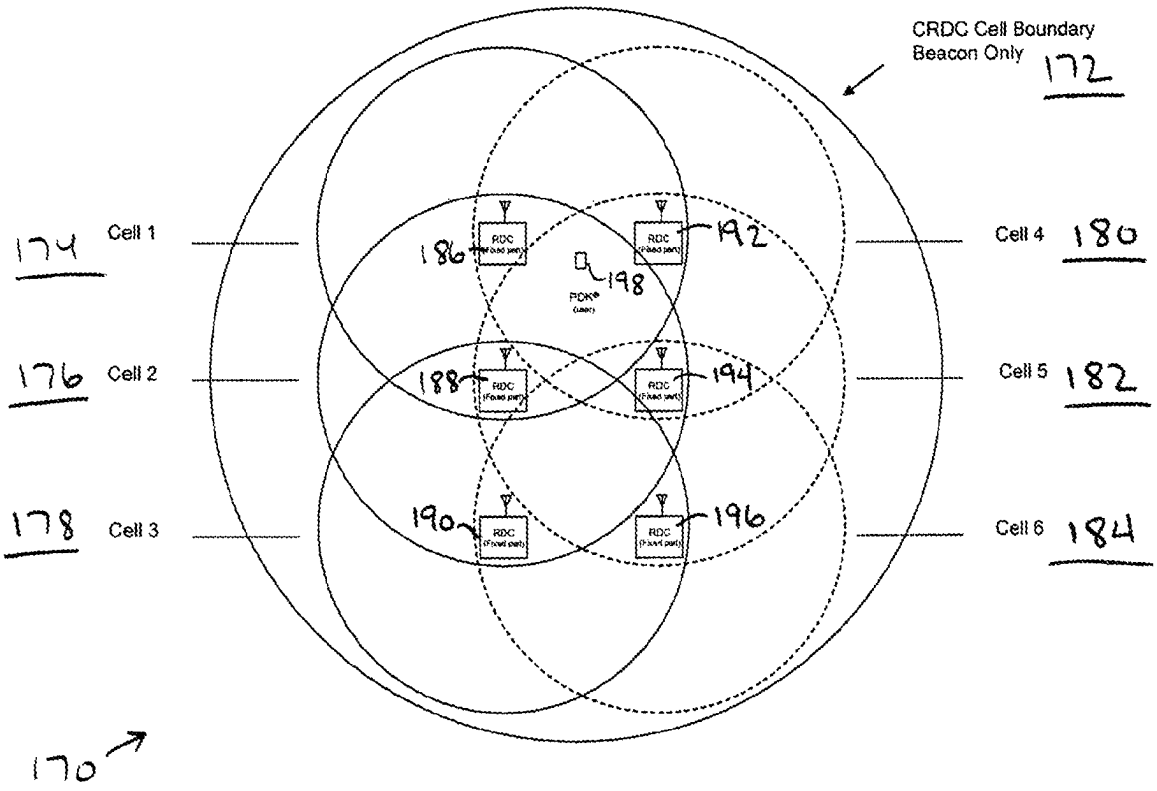
CRDC Cell Boundary
Beacon Only
172
174
Cell 1
176
Cell 2
178
Cell 3
Cell 4
180
Cell 5
182
Cell 6
184
186
192
198
188
194
190
196
170

FIGURE 21

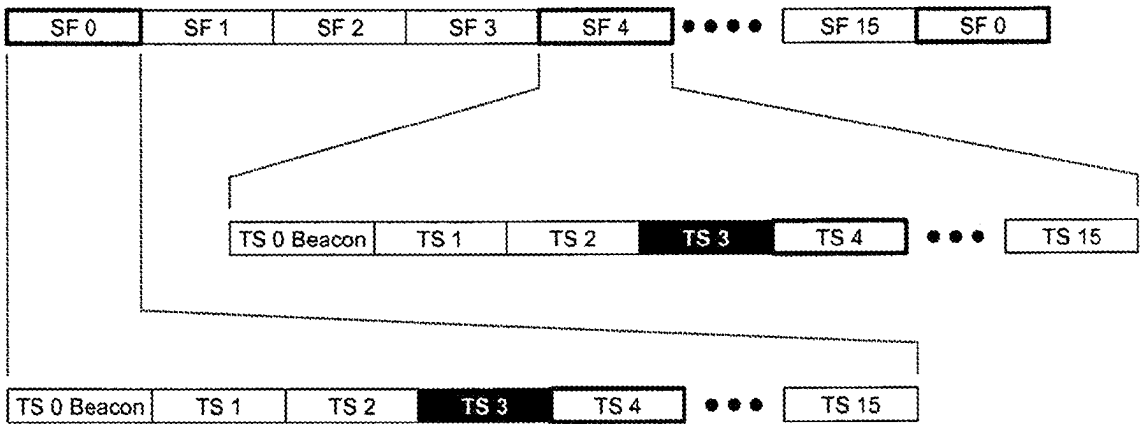
SF 0
SF 1
SF 2
SF 3
SF 4
SF 15
SF 0
TS 0 Beacon
TS 1
TS 2
TS 3
TS 4
TS 15
TS 0 Beacon
TS 1
TS 2
TS 3
TS 4
TS 15

FIGURE 22

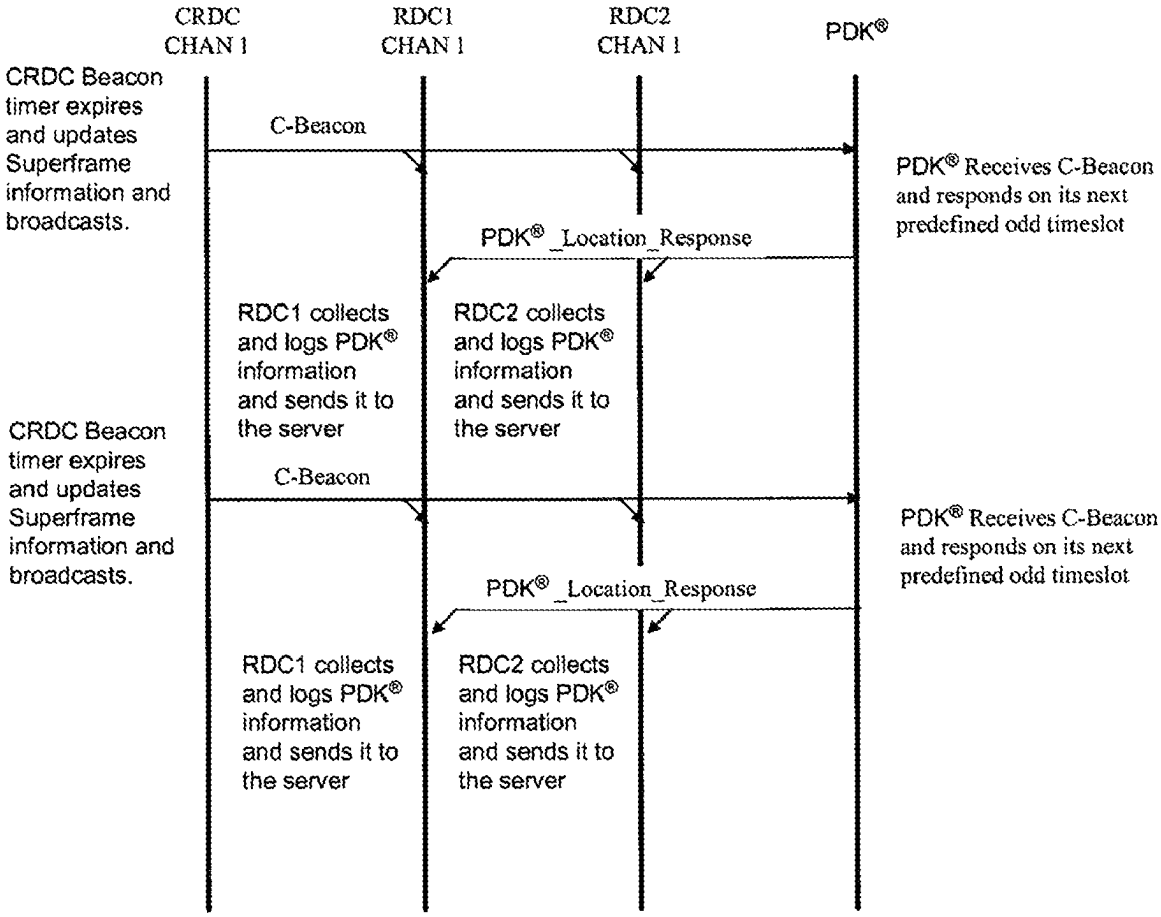
CRDC
CHAN 1
RDC1
CHAN 1
RDC2
CHAN 1
PDK®
CRDC Beacon timer expires and updates Superframe information and broadcasts.
C-Beacon
PDK® Receives C-Beacon and responds on its next predefined odd timeslot
PDK® _Location_Response
RDC1 collects and logs PDK® information and sends it to the server
RDC2 collects and logs PDK® information and sends it to the server
CRDC Beacon timer expires and updates Superframe information and broadcasts.
C-Beacon
PDK® Receives C-Beacon and responds on its next predefined odd timeslot
PDK® _Location_Response
RDC1 collects and logs PDK® information and sends it to the server
RDC2 collects and logs PDK® information and sends it to the server

FIGURE 23

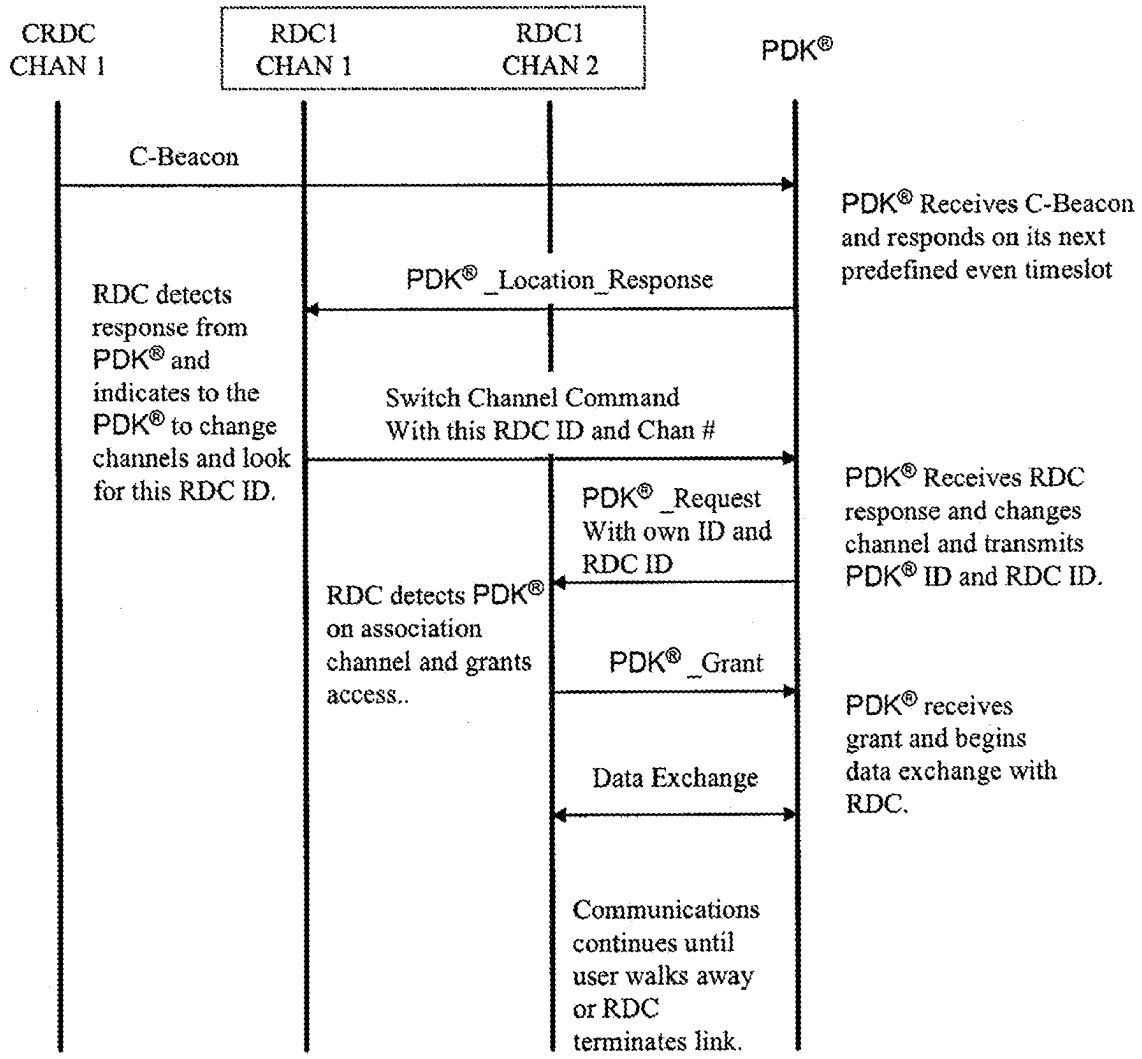
CRDC
CHAN 1
RDC1
CHAN 1
RDC1
CHAN 2
PDK®
C-Beacon
PDK® Receives C-Beacon and responds on its next predefined even timeslot
PDK® _Location_Response
RDC detects response from PDK® and indicates to the PDK® to change channels and look for this RDC ID.
Switch Channel Command
With this RDC ID and Chan #
PDK® _Request
With own ID and
RDC ID
PDK® Receives RDC response and changes channel and transmits PDK® ID and RDC ID.
RDC detects PDK® on association channel and grants access..
PDK® _Grant
PDK® receives grant and begins data exchange with RDC.
Data Exchange
Communications continues until user walks away or RDC terminates link.

FIGURE 24

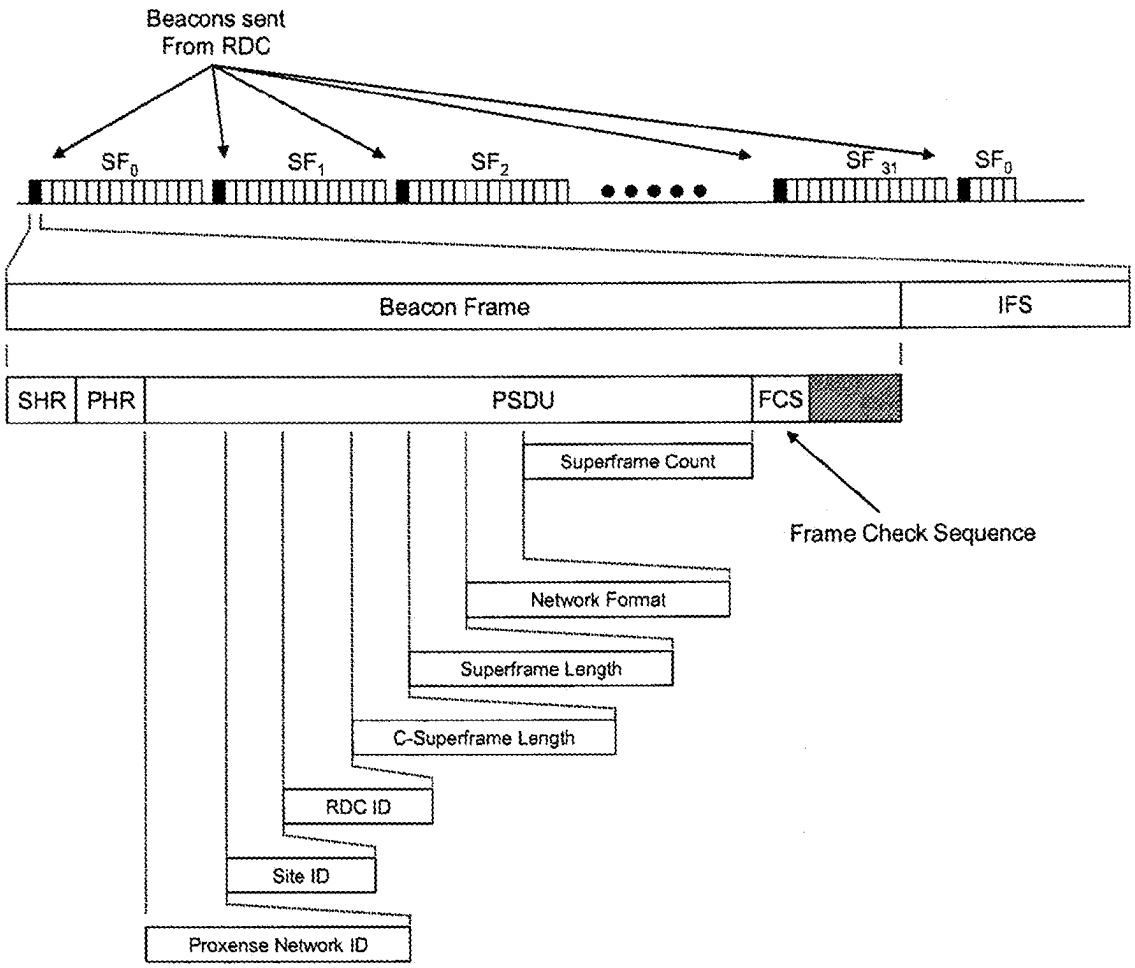
Beacons sent
From RDC
SF0
SF1
SF2
SF 31
SF0
Beacon Frame
IFS
SHR
PHR
PSDU
FCS
Superframe Count
Frame Check Sequence
Network Format
Superframe Length
C-Superframe Length
RDC ID
Site ID
Proxense Network ID

FIGURE 25

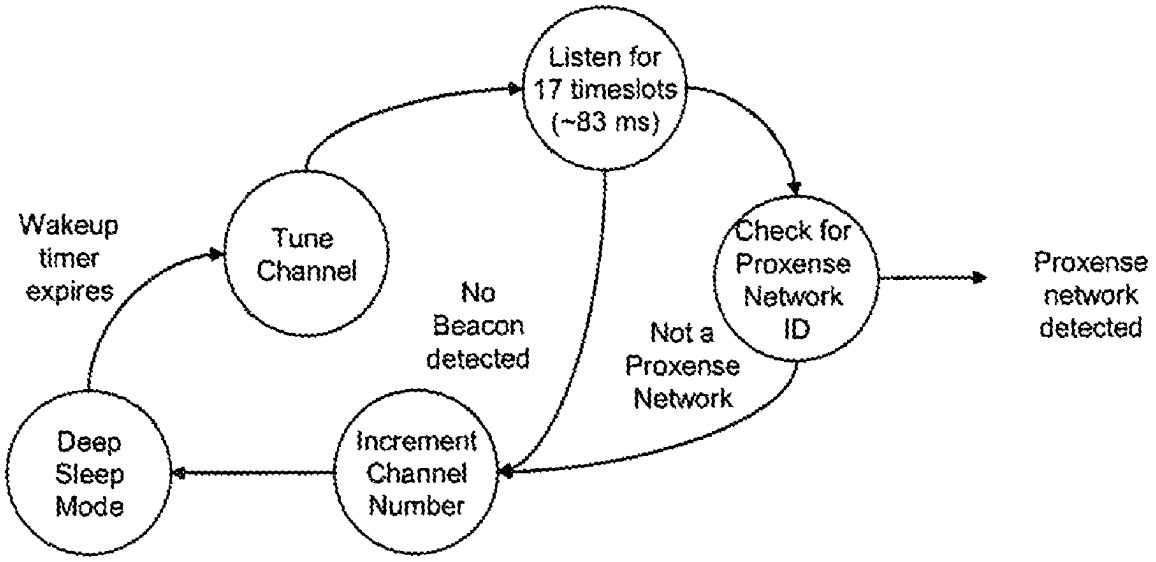
Listen for
17 timeslots
(~83 ms)
Wakeup
timer
expires
Tune
Channel
No
Beacon
detected
Check for
Proxense
Network
ID
Not a
Proxense
Network
Proxense
network
detected
Deep
Sleep
Mode
Increment
Channel
Number

FIGURE 26

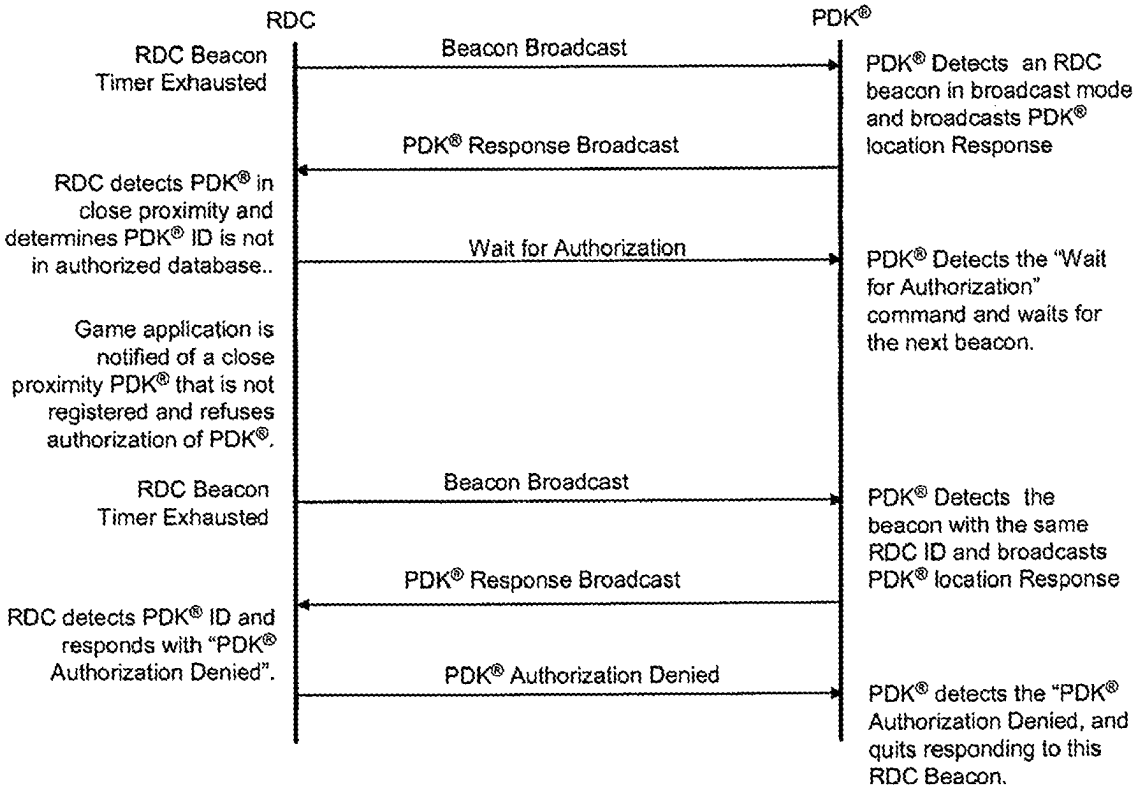
RDC
PDK®
RDC Beacon Timer Exhausted
Beacon Broadcast
PDK® Detects an RDC beacon in broadcast mode and broadcasts PDK® location Response
PDK® Response Broadcast
RDC detects PDK® in close proximity and determines PDK® ID is not in authorized database..
Wait for Authorization
PDK® Detects the "Wait for Authorization" command and waits for the next beacon.
Game application is notified of a close proximity PDK® that is not registered and refuses authorization of PDK®.
RDC Beacon Timer Exhausted
Beacon Broadcast
PDK® Detects the beacon with the same RDC ID and broadcasts PDK® location Response
PDK® Response Broadcast
RDC detects PDK® ID and responds with "PDK® Authorization Denied".
PDK® Authorization Denied
PDK® detects the "PDK® Authorization Denied, and quits responding to this RDC Beacon.

FIGURE 27

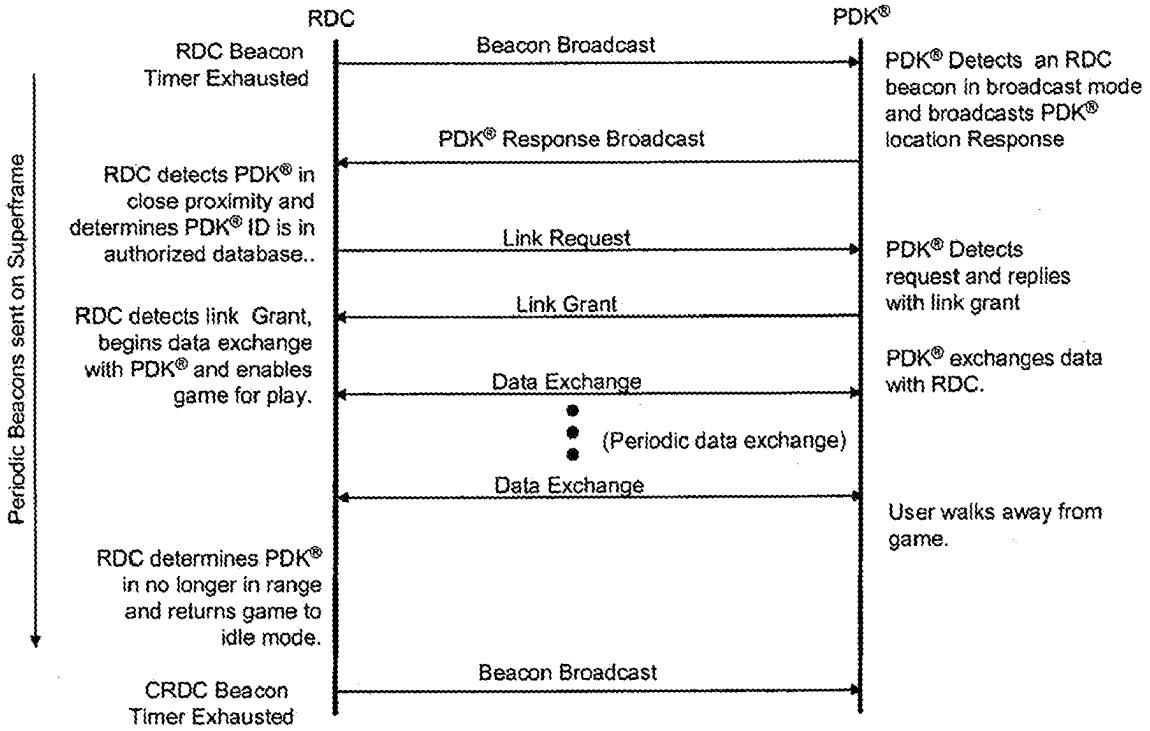
RDC
PDK®
RDC Beacon Timer Exhausted
Beacon Broadcast
PDK® Detects an RDC beacon in broadcast mode and broadcasts PDK® location Response
PDK® Response Broadcast
RDC detects PDK® in close proximity and determines PDK® ID is in authorized database..
Link Request
PDK® Detects request and replies with link grant
Link Grant
RDC detects link Grant, begins data exchange with PDK® and enables game for play.
PDK® exchanges data with RDC.
Data Exchange
(Periodic data exchange)
Data Exchange
User walks away from game.
RDC determines PDK® in no longer in range and returns game to idle mode.
Beacon Broadcast
CRDC Beacon Timer Exhausted
Periodic Beacons sent on Superframe

FIGURE 28

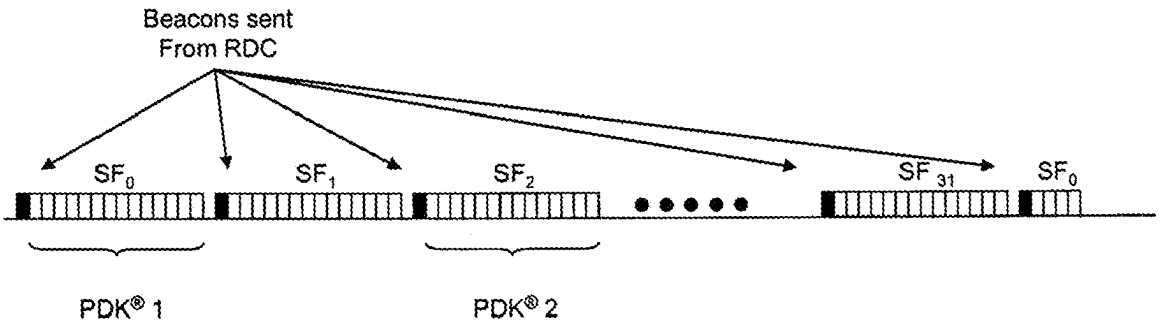

FIGURE 29

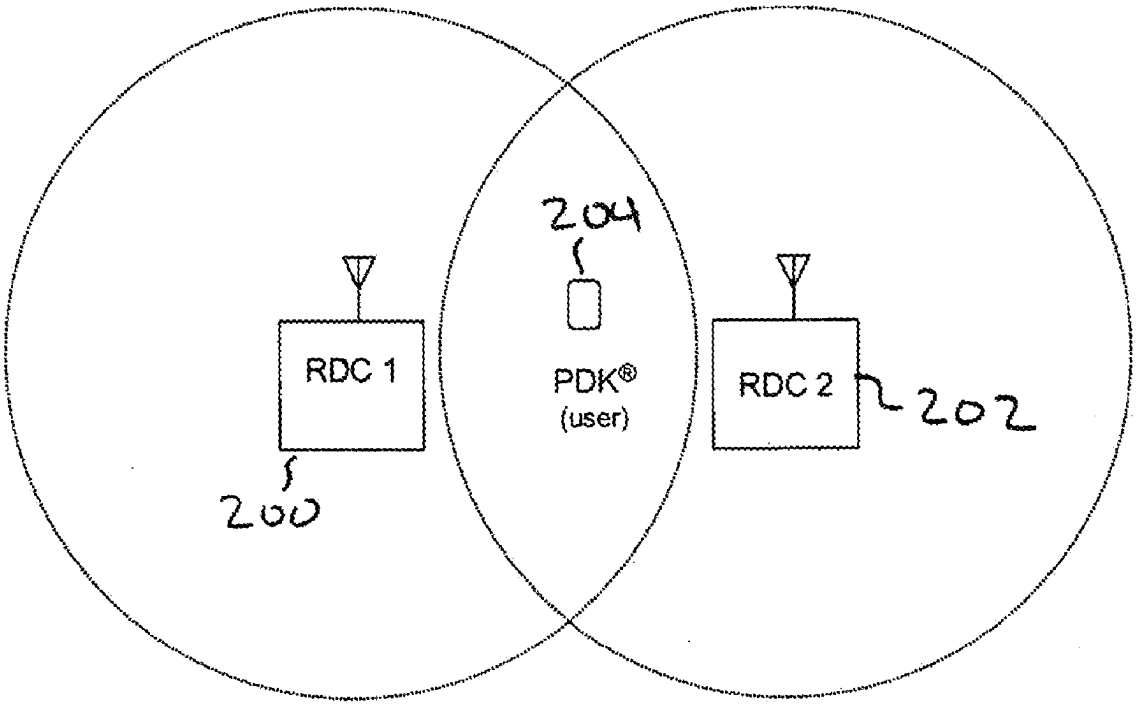

FIGURE 30

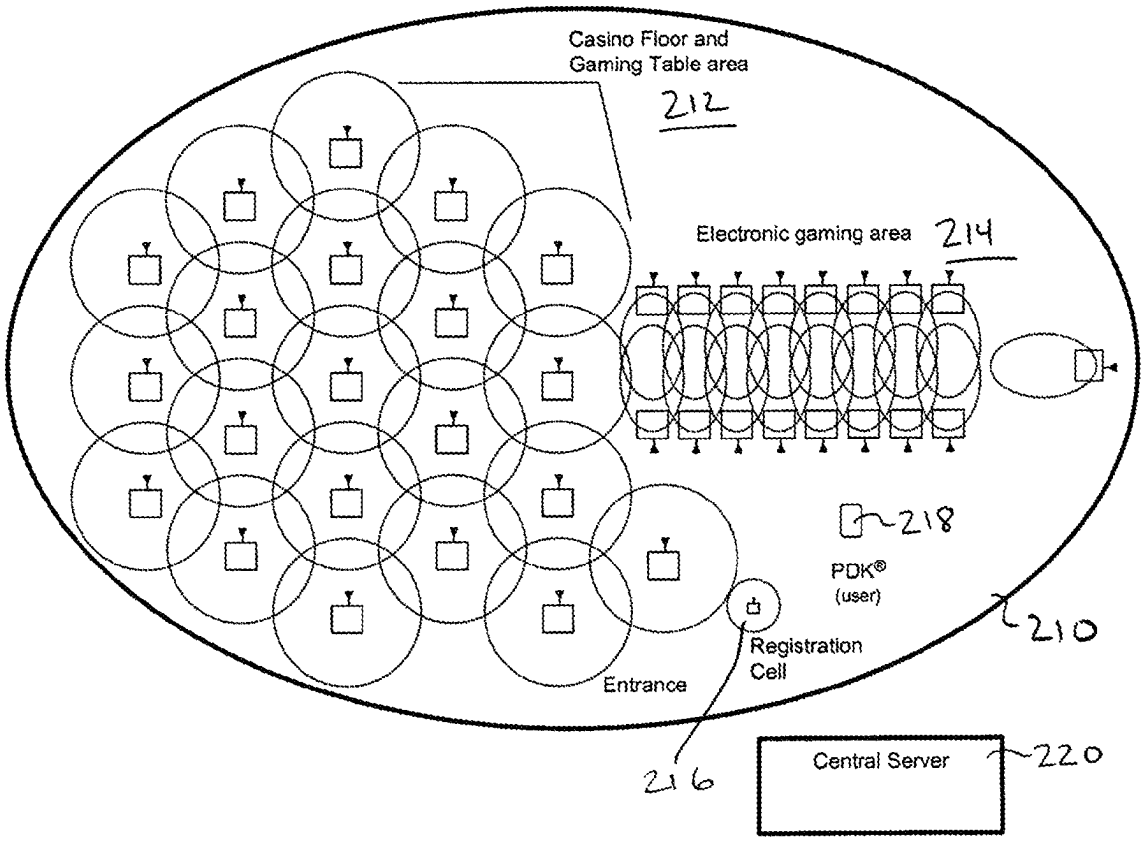
Casino Floor and
Gaming Table area
212
Electronic gaming area
214
218
PDK®
(user)
210
Registration
Cell
Entrance
216
Central Server
220

FIGURE 31

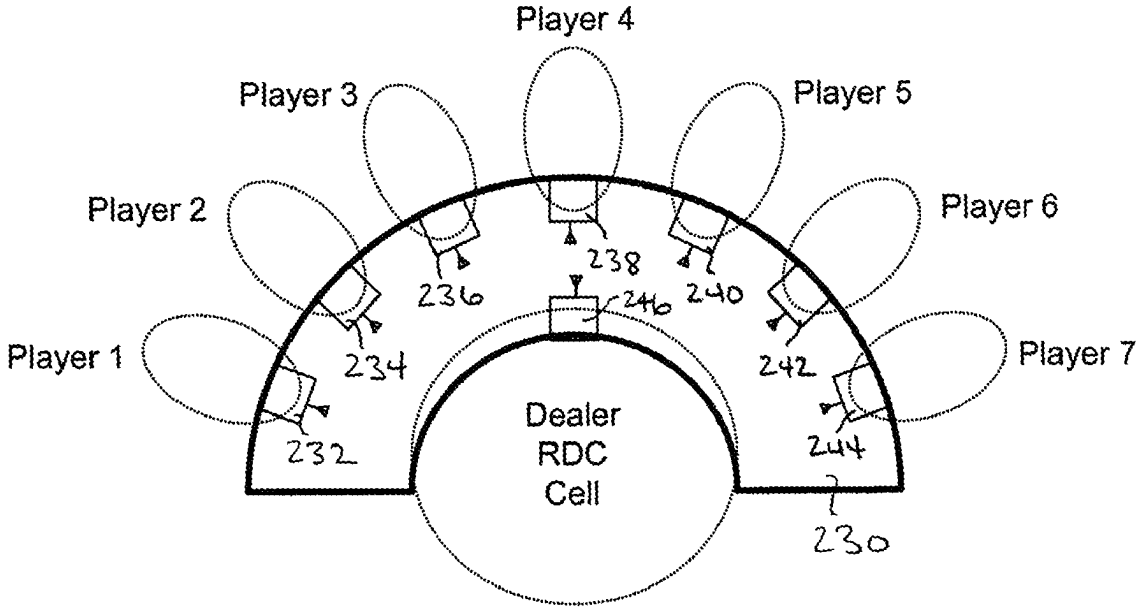
Player 4
Player 3
Player 5
Player 2
Player 6
Player 1
Player 7
238
236
240
246
234
242
232
244
Dealer
RDC
Cell
230

FIGURE 32

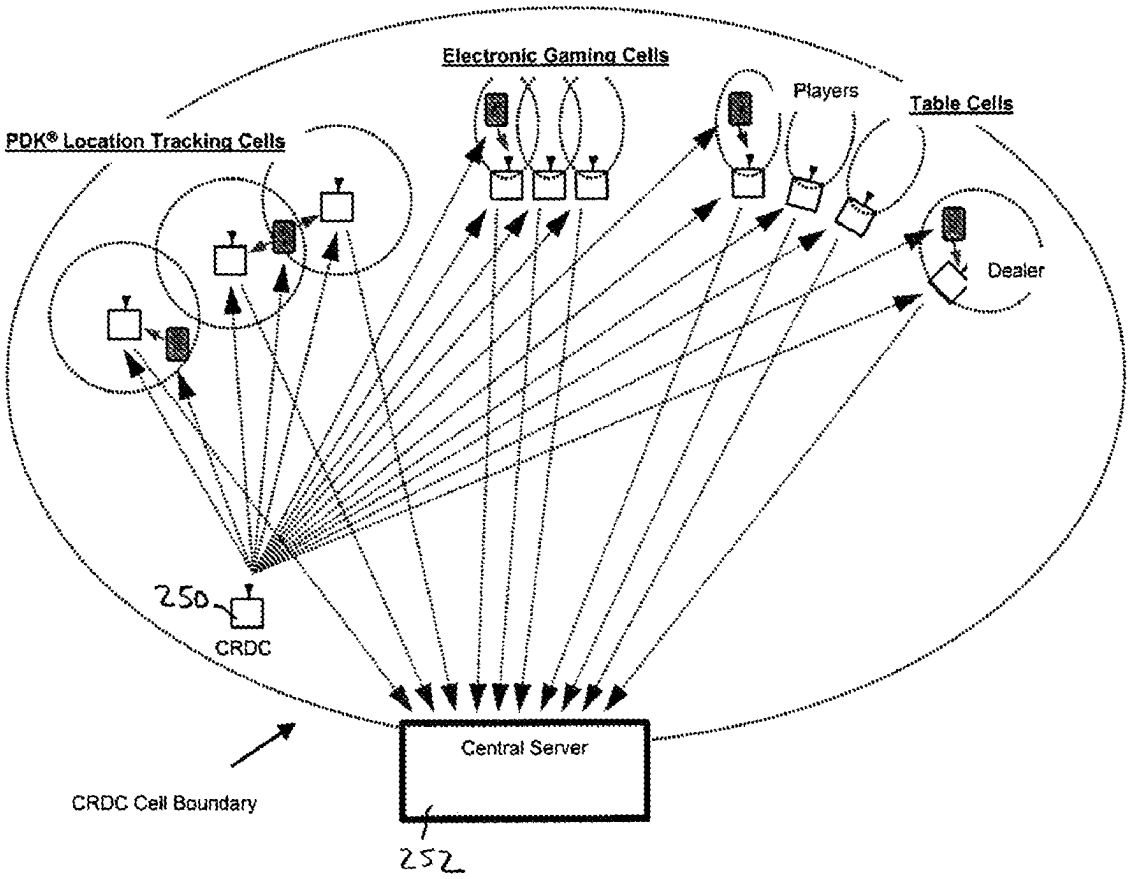
Electronic Gaming Cells
Players
Table Cells
PDK® Location Tracking Cells
Dealer
250
CRDC
Central Server
CRDC Cell Boundary
252

FIGURE 33

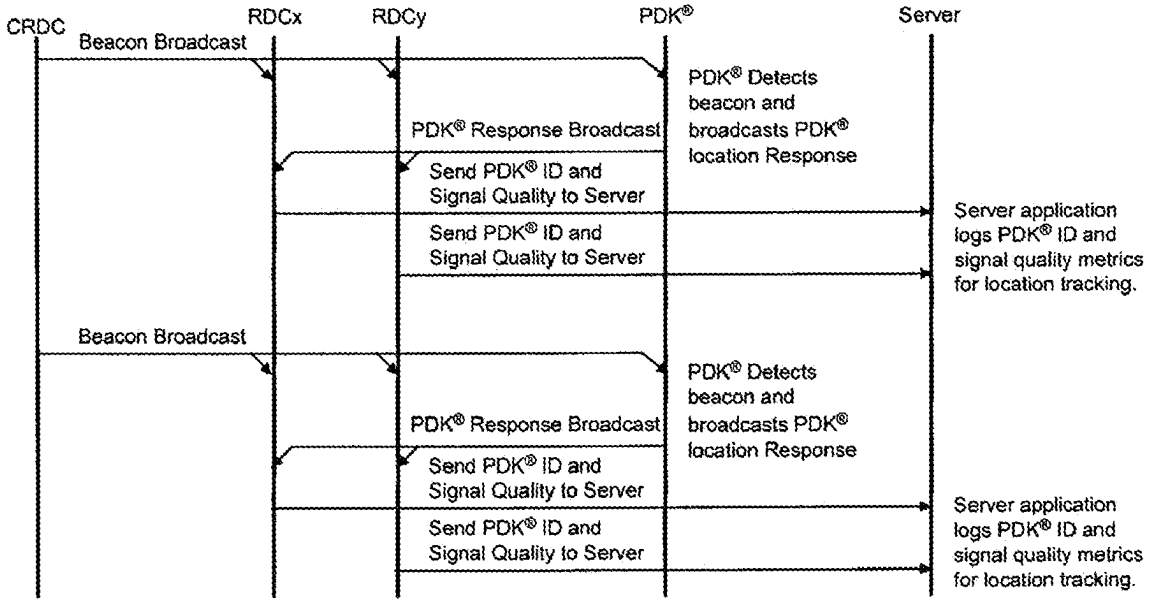
CRDC
RDCx
RDCy
PDK®
Server
Beacon Broadcast
PDK® Detects beacon and broadcasts PDK® location Response
PDK® Response Broadcast
Send PDK® ID and Signal Quality to Server
Send PDK® ID and Signal Quality to Server
Server application logs PDK® ID and signal quality metrics for location tracking.
Beacon Broadcast
PDK® Detects beacon and broadcasts PDK® location Response
PDK® Response Broadcast
Send PDK® ID and Signal Quality to Server
Send PDK® ID and Signal Quality to Server
Server application logs PDK® ID and signal quality metrics for location tracking.

FIGURE 34

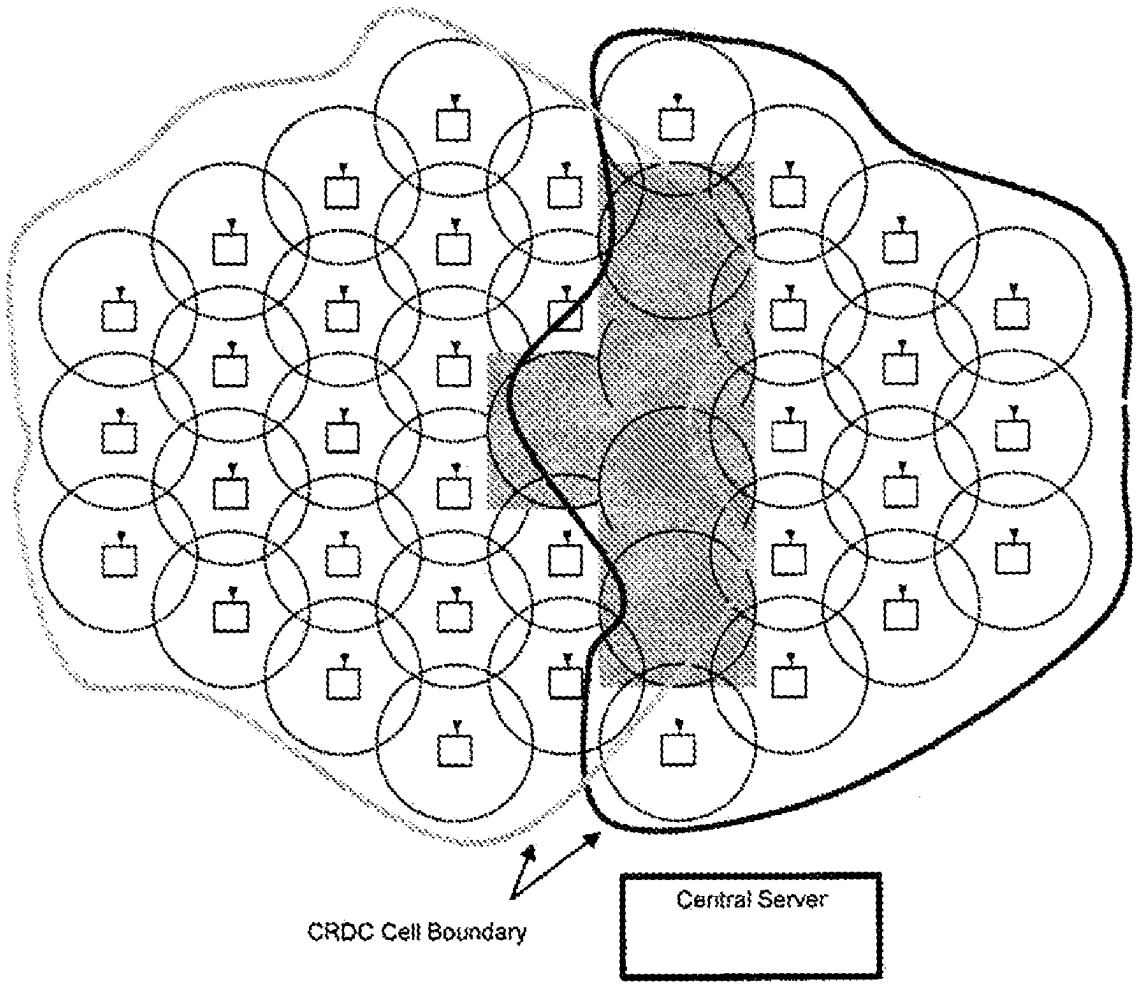

FIGURE 35

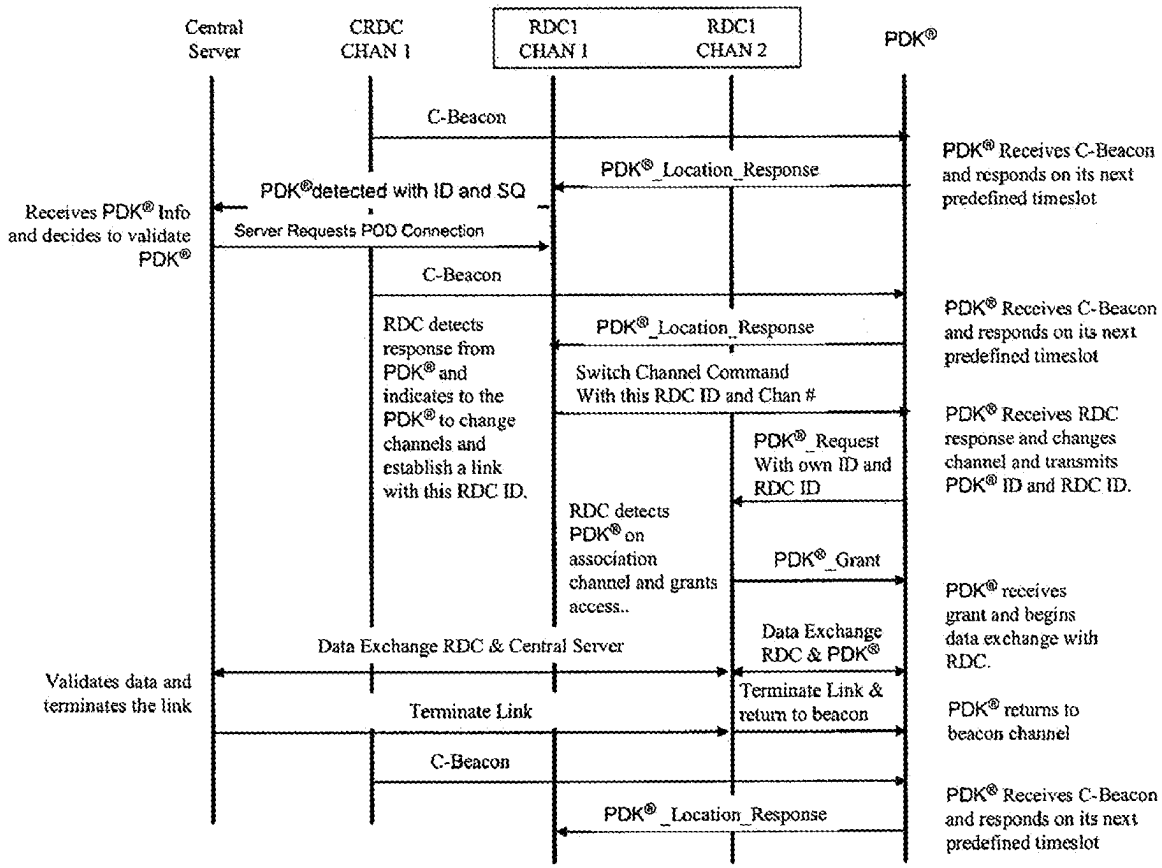
Central Server
CRDC CHAN 1
RDC1 CHAN 1
RDC1 CHAN 2
PDK®
C-Beacon
PDK® Receives C-Beacon and responds on its next predefined timeslot
PDK®_Location_Response
PDK®detected with ID and SQ
Receives PDK® Info and decides to validate PDK®
Server Requests POD Connection
C-Beacon
PDK® Receives C-Beacon and responds on its next predefined timeslot
RDC detects response from PDK® and indicates to the PDK® to change channels and establish a link with this RDC ID.
PDK®_Location_Response
Switch Channel Command With this RDC ID and Chan #
PDK® Receives RDC response and changes channel and transmits PDK® ID and RDC ID.
PDK®_Request With own ID and RDC ID
RDC detects PDK® on association channel and grants access..
PDK®_Grant
PDK® receives grant and begins data exchange with RDC.
Data Exchange RDC & Central Server
Data Exchange RDC & PDK®
Validates data and terminates the link
Terminate Link
Terminate Link & return to beacon
PDK® returns to beacon channel
C-Beacon
PDK® Receives C-Beacon and responds on its next predefined timeslot
PDK® _Location_Response

FIGURE 36

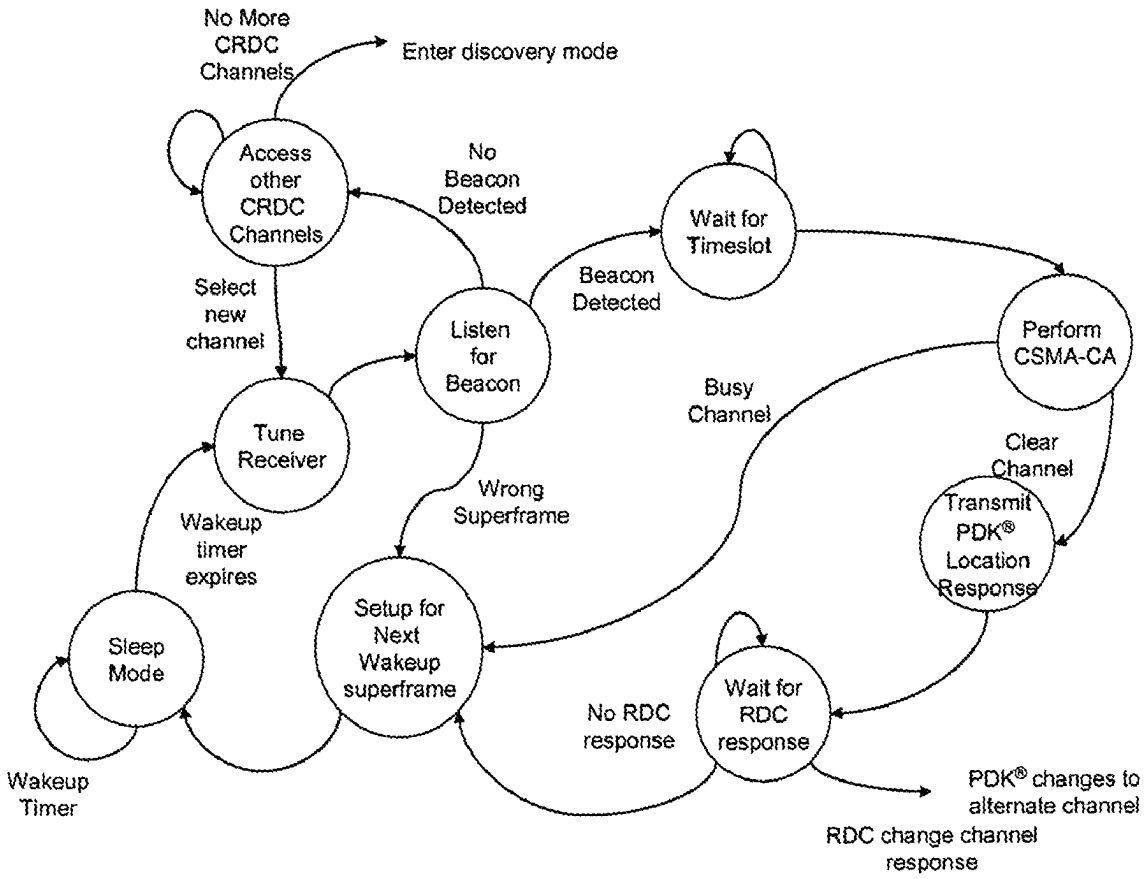
No More CRDC Channels
Enter discovery mode
Access other CRDC Channels
No Beacon Detected
Wait for Timeslot
Beacon Detected
Select new channel
Listen for Beacon
Perform CSMA-CA
Busy Channel
Tune Receiver
Clear Channel
Wrong Superframe
Transmit PDK® Location Response
Wakeup timer expires
Setup for Next Wakeup superframe
Sleep Mode
Wait for RDC response
No RDC response
Wakeup Timer
PDK® changes to alternate channel
RDC change channel response

FIGURE 37

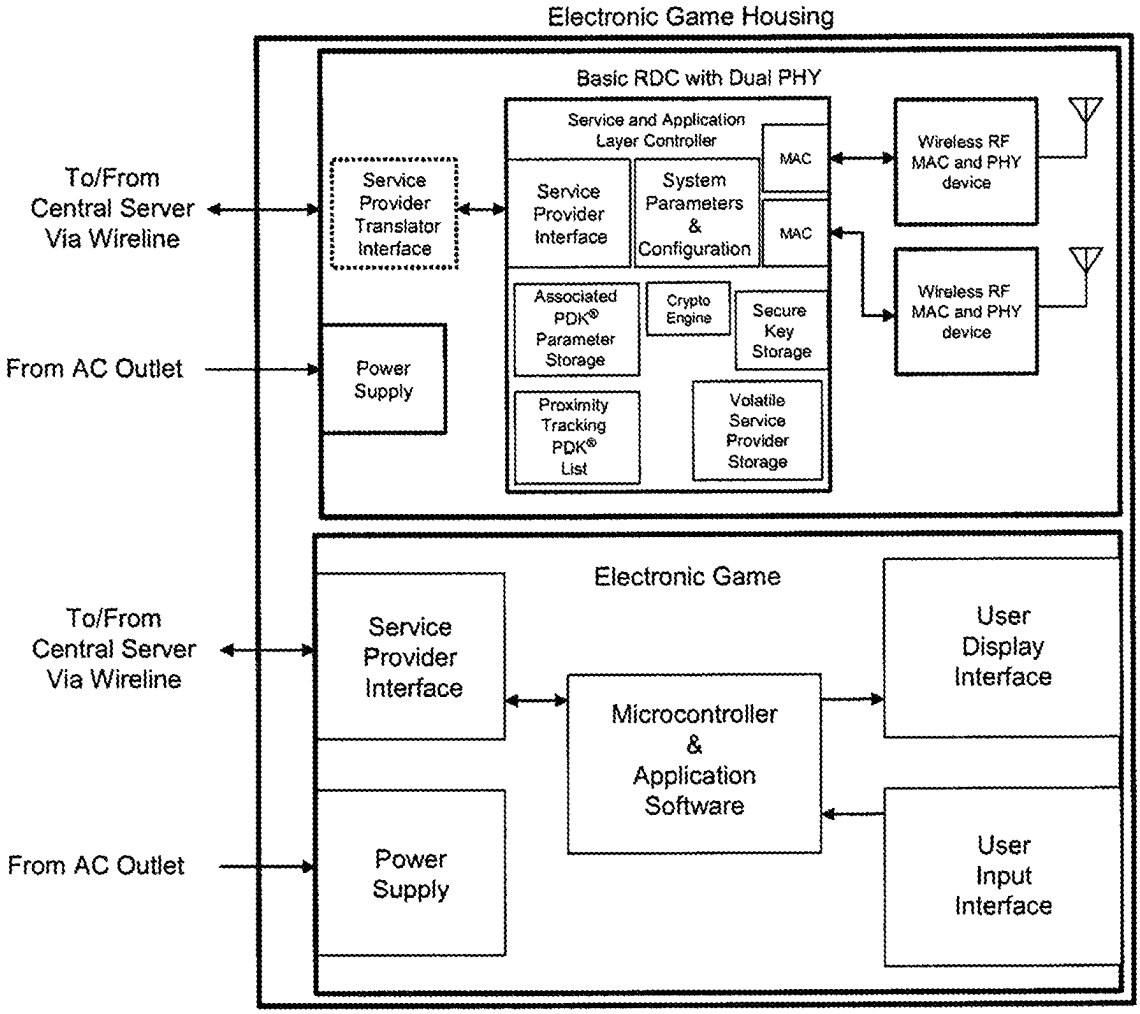
Electronic Game Housing
Basic RDC with Dual PHY
To/From Central Server Via Wireline
Service Provider Translator Interface
Service and Application Layer Controller
Service Provider Interface
System Parameters & Configuration
MAC
MAC
Wireless RF MAC and PHY device
Wireless RF MAC and PHY device
Associated PDK® Parameter Storage
Crypto Engine
Secure Key Storage
From AC Outlet
Power Supply
Proximity Tracking PDK® List
Volatile Service Provider Storage
Electronic Game
To/From Central Server Via Wireline
Service Provider Interface
Microcontroller & Application Software
User Display Interface
From AC Outlet
Power Supply
User Input Interface

FIGURE 38

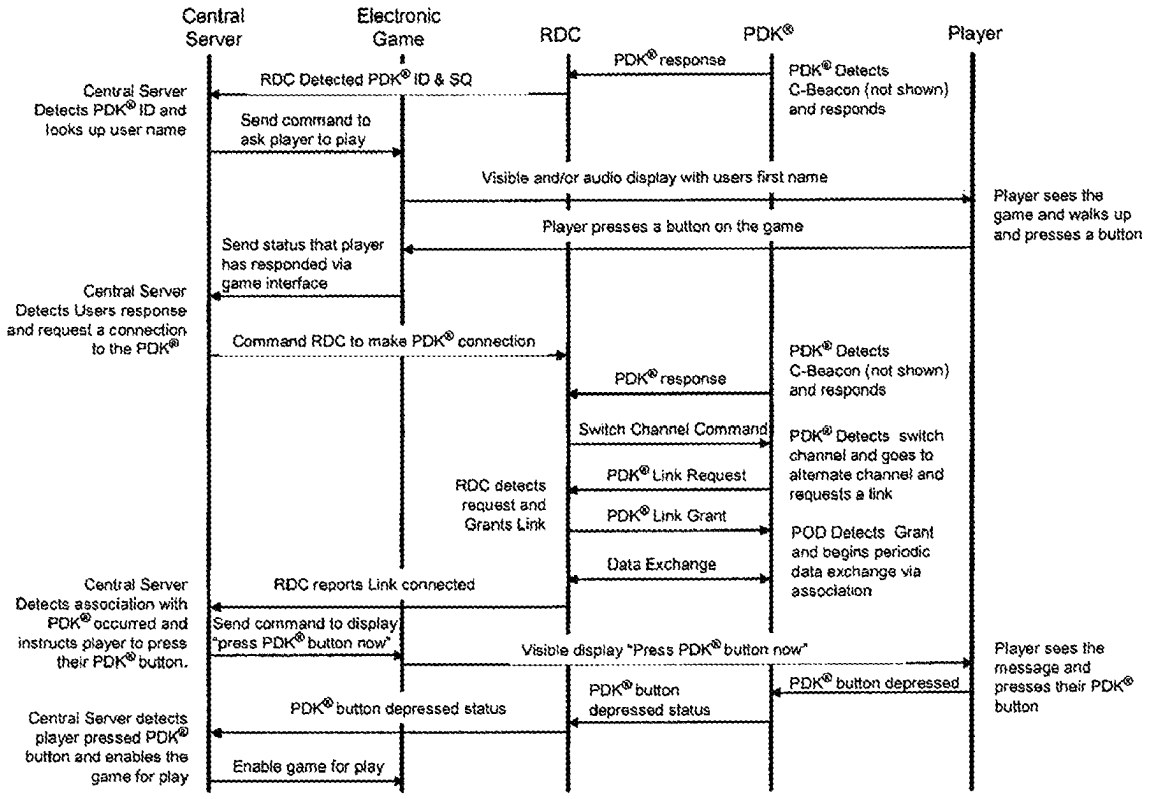
Central Server
Electronic Game
RDC
PDK®
Player
PDK® response
RDC Detected PDK® ID & SQ
PDK® Detects C-Beacon (not shown) and responds
Central Server Detects PDK® ID and looks up user name
Send command to ask player to play
Visible and/or audio display with users first name
Player sees the game and walks up and presses a button
Player presses a button on the game
Send status that player has responded via game interface
Central Server Detects Users response and request a connection to the PDK®
Command RDC to make PDK® connection
PDK® Detects C-Beacon (not shown) and responds
PDK® response
Switch Channel Command
PDK® Detects switch channel and goes to alternate channel and requests a link
PDK® Link Request
RDC detects request and Grants Link
PDK® Link Grant
POD Detects Grant and begins periodic data exchange via association
Data Exchange
Central Server Detects association with PDK® occurred and instructs player to press their PDK® button.
RDC reports Link connected
Send command to display "press PDK® button now"
Visible display "Press PDK® button now"
Player sees the message and presses their PDK® button
PDK® button depressed
PDK® button depressed status
PDK® button depressed status
Central Server detects player pressed PDK® button and enables the game for play
Enable game for play

FIGURE 39

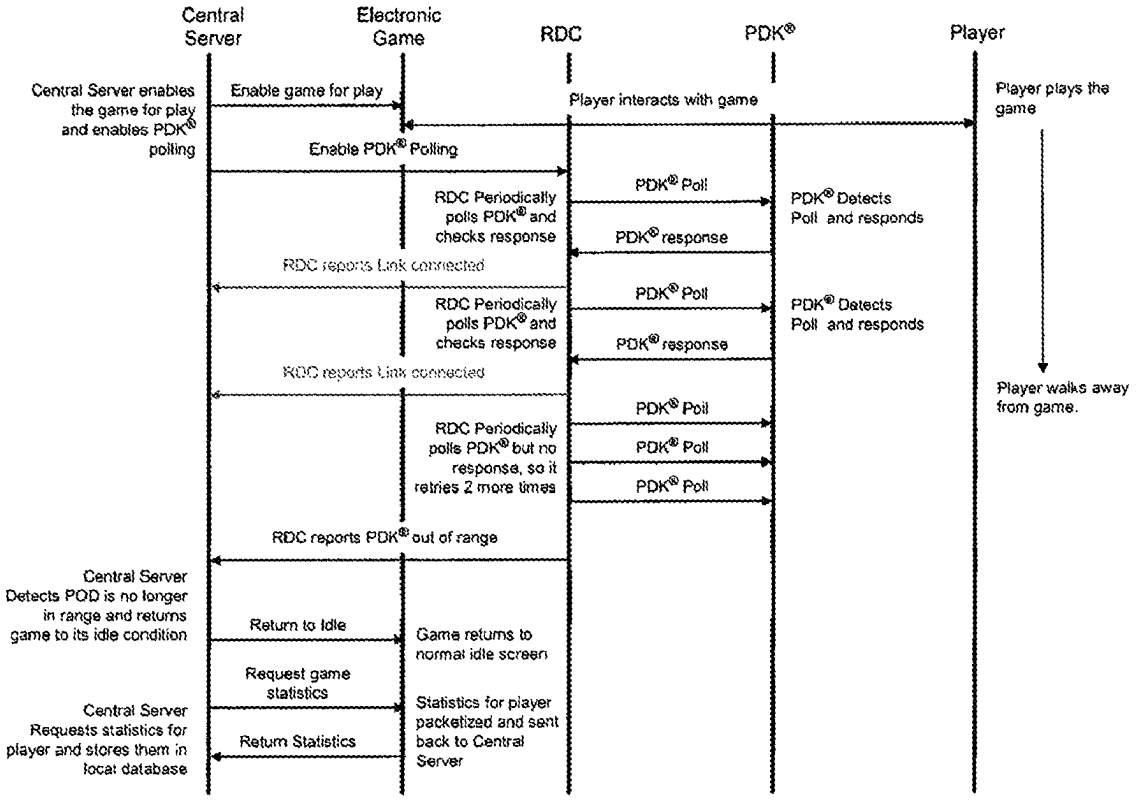
Central Server
Electronic Game
RDC
PDK®
Player
Central Server enables the game for play and enables PDK® polling
Enable game for play
Player interacts with game
Player plays the game
Enable PDK® Polling
RDC Periodically polls PDK® and checks response
PDK® Poll
PDK® Detects Poll and responds
PDK® response
RDC reports Link connected
RDC Periodically polls PDK® and checks response
PDK® Poll
PDK® Detects Poll and responds
PDK® response
RDC reports Link connected
Player walks away from game.
RDC Periodically polls PDK® but no response, so it retries 2 more times
PDK® Poll
PDK® Poll
PDK® Poll
RDC reports PDK® out of range
Central Server Detects POD is no longer in range and returns game to its idle condition
Return to Idle
Game returns to normal idle screen
Request game statistics
Central Server Requests statistics for player and stores them in local database
Statistics for player packetized and sent back to Central Server
Return Statistics

FIGURE 40

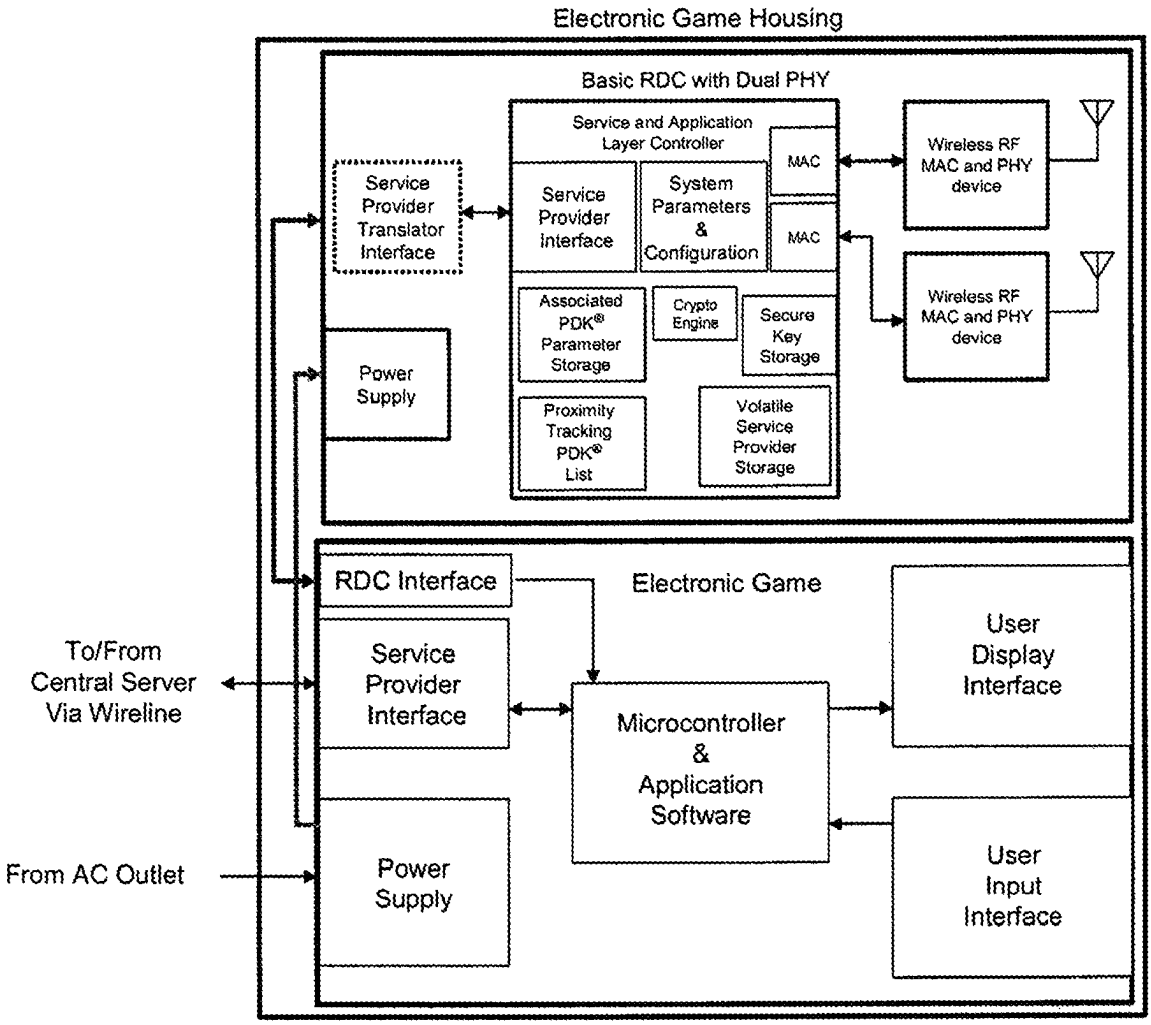
Electronic Game Housing
Basic RDC with Dual PHY
Service and Application Layer Controller
Service Provider Translator Interface
Service Provider Interface
System Parameters & Configuration
MAC
MAC
Wireless RF MAC and PHY device
Wireless RF MAC and PHY device
Associated PDK® Parameter Storage
Crypto Engine
Secure Key Storage
Power Supply
Proximity Tracking PDK® List
Volatile Service Provider Storage
RDC Interface
Electronic Game
To/From Central Server Via Wireline
Service Provider Interface
Microcontroller & Application Software
User Display Interface
From AC Outlet
Power Supply
User Input Interface

FIGURE 41

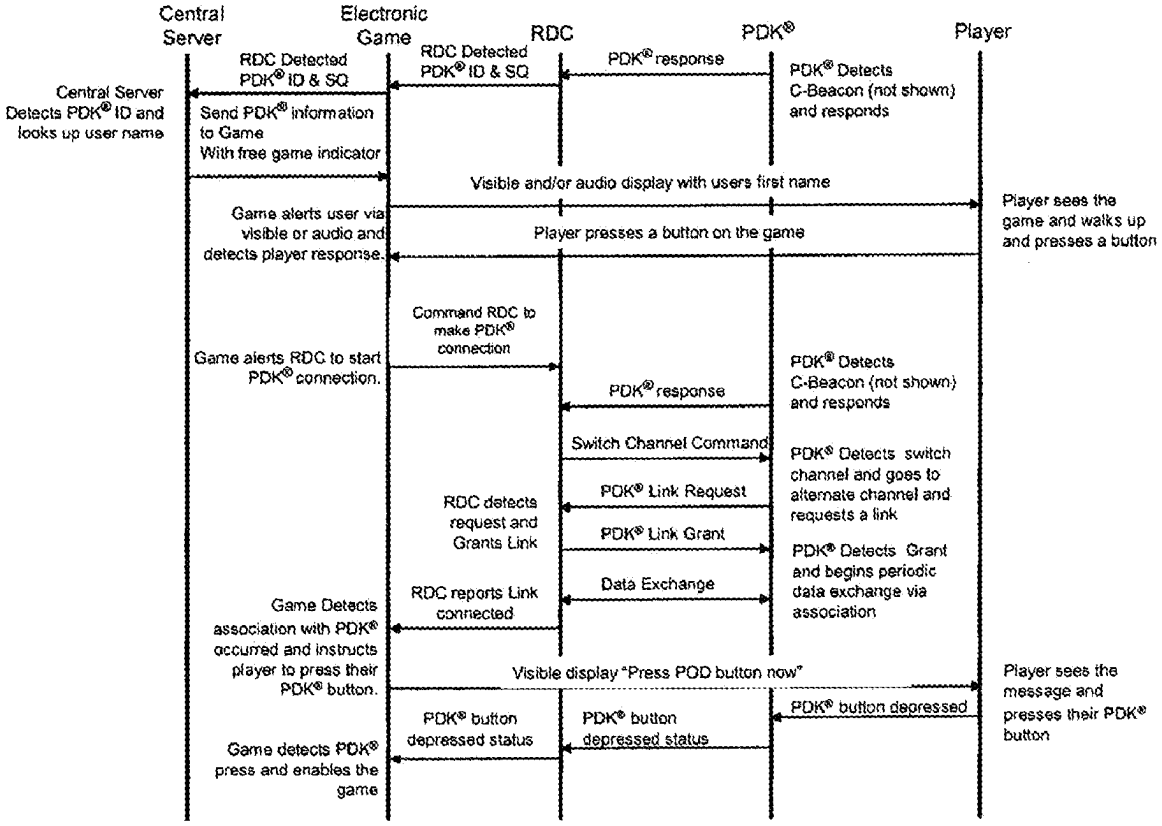
Central Server
Electronic Game
RDC
PDK®
Player
RDC Detected PDK® ID & SQ
RDC Detected PDK® ID & SQ
PDK® response
PDK® Detects C-Beacon (not shown) and responds
Central Server Detects PDK® ID and looks up user name
Send PDK® information to Game With free game indicator
Visible and/or audio display with users first name
Player sees the game and walks up and presses a button
Game alerts user via visible or audio and detects player response.
Player presses a button on the game
Command RDC to make PDK® connection
Game alerts RDC to start PDK® connection.
PDK® response
PDK® Detects C-Beacon (not shown) and responds
Switch Channel Command
PDK® Detects switch channel and goes to alternate channel and requests a link
PDK® Link Request
RDC detects request and Grants Link
PDK® Link Grant
PDK® Detects Grant and begins periodic data exchange via association
Data Exchange
RDC reports Link connected
Game Detects association with PDK® occurred and instructs player to press their PDK® button.
Visible display "Press POD button now"
Player sees the message and presses their PDK® button
PDK® button depressed
PDK® button depressed status
PDK® button depressed status
Game detects PDK® press and enables the game

FIGURE 42

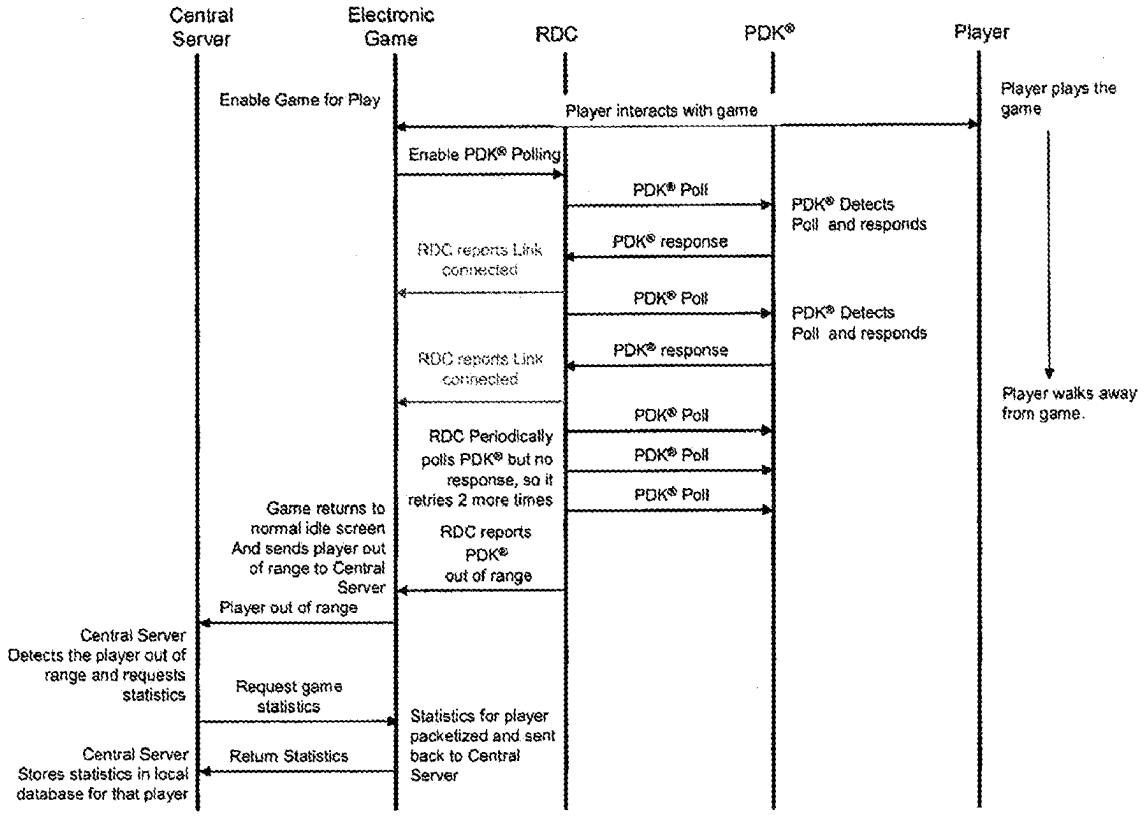
Central Server
Electronic Game
RDC
PDK®
Player
Enable Game for Play
Player interacts with game
Player plays the game
Enable PDK® Polling
PDK® Poll
PDK® Detects Poll and responds
PDK® response
RDC reports Link connected
PDK® Poll
PDK® Detects Poll and responds
PDK® response
RDC reports Link connected
Player walks away from game.
PDK® Poll
RDC Periodically polls PDK® but no response, so it retries 2 more times
PDK® Poll
PDK® Poll
Game returns to normal idle screen And sends player out of range to Central Server
RDC reports PDK® out of range
Player out of range
Central Server Detects the player out of range and requests statistics
Request game statistics
Statistics for player packetized and sent back to Central Server
Central Server Stores statistics in local database for that player
Return Statistics

FIGURE 43

DYNAMIC REAL-TIME TIERED CLIENT ACCESS

CROSS-REFERENCE TO RELATED APPLICATIONS

The present application claims priority, under 35 U.S.C. §119, of U.S. Provisional Patent Application No. 60/760,362, filed Jan. 6, 2006 and entitled "Securing Transactions Between an Electric Key and Lock Within Proximity of Each Other," the entirety of which is hereby incorporated by reference.

BACKGROUND

Optimizing sales transactions, providing secure access to physical and digital assets, uniquely identifying individuals, and generally improving communications and data exchange are challenges faced by many businesses and organizations. Ensuring that these processes are safe, efficient, reliable, and simple is important to companies, merchants, service providers, users, and consumers. Well-known technologies such as user-specific magnetic cards (e.g., credit and debit cards, employee badges), and more recent developments such as contactless cards designed to allow access or authorization when placed near a compatible reader, are examples of attempts to address the need to instill efficiency and integrity in, for example, the general classes of transactions described above.

SUMMARY

According to at least one aspect of one or more embodiments of the present invention, a method of facilitating data exchange includes: assigning a first specific time slot for a first client device to wirelessly communicate with a fixed proximity-based reader device; and assigning a second specific time slot for a second client device to wirelessly communicate with the fixed proximity-based reader device.

According to at least one other aspect of one or more embodiments of the present invention, an apparatus includes: a physical, portable key device adapted to wirelessly communicate data with a fixed reader device when located in a wireless coverage area of the fixed reader device, where the key device is arranged to communicate with the fixed reader device during a time slot determined based on a bit field stored in the key device.

According to at least one other aspect of one or more embodiments of the present invention, a system includes: a fixed reader device operatively connected to a network device and having a first wireless coverage range within a second wireless coverage range; and a portable client device arranged to wirelessly communicate data with the fixed reader device when the client device is within the first wireless coverage range, where a time slot during which the client device communicates data with the fixed reader device is determined based on synchronization information received by the client device.

According to at least one other aspect of one or more embodiments of the present invention, a system includes: a network device arranged to wirelessly broadcast synchronization information in a first wireless coverage range; and a portable client device adapted to wirelessly communicate data with a reader device when the client device is located in communication proximity of the reader device, where the client device is arranged to receive data from the network device during a time slot determined based on the synchronization information.

According to at least one other aspect of one or more embodiments of the present invention, a system includes: a network device configured to wirelessly broadcast synchronization information; and a portable client device configured to wirelessly receive the synchronization information, where the received synchronization information includes information assigning a time slot during which the client device can receive data from the network device.

According to at least one other aspect of one or more embodiments of the present invention, a method of facilitating data exchange includes: wirelessly broadcasting synchronization information to a portable client device, where the synchronization information includes information assigning a time slot during which the client device can receive data; and wirelessly broadcasting data for reception by the client device during the time slot.

The features and advantages described herein are not all inclusive, and, in particular, many additional features and advantages will be apparent to those skilled in the art in view of the following description. Moreover, it should be noted that the language used herein has been principally selected for readability and instructional purposes and may not have been selected to circumscribe the present invention.

BRIEF DESCRIPTION OF DRAWINGS

FIG. **1** shows a single wireless cell in which a reader decoder circuit (RDC) and a personal digital key (PDK) are present.

FIG. **2** shows partially overlapping RDC cells.

FIG. **3** shows synchronized partially overlapping RDC cells.

FIG. **4** shows a synchronized multi-cell system in accordance with one or more embodiments of the present invention.

FIG. **5** shows a PDK in accordance with one or more embodiments of the present invention.

FIG. **6** shows a portion of the PDK shown in FIG. **5**.

FIG. **7** shows a portion of the PDK shown in FIG. **5**.

FIG. **8** shows an RDC in accordance with one or more embodiments of the present invention.

FIG. **9** shows an RDC in accordance with one or more embodiments of the present invention.

FIG. **10** shows an arrangement of a timeslot in accordance with one or more embodiments of the present invention.

FIG. **11** shows a superframe in accordance with one or more embodiments of the present invention.

FIG. **12** shows a coordinator superframe in accordance with one or more embodiments of the present invention.

FIG. **13** shows an overall framing structure in accordance with one or more embodiments of the present invention.

FIG. **14** shows an RDC beacon for use in a single cell system in accordance with one or more embodiments of the present invention.

FIG. **15** shows a single cell system in accordance with one or more embodiments of the present invention.

FIG. **16** shows a PDK-RDC handshake in accordance with one or more embodiments of the present invention.

FIG. **17** shows a coordinator beacon configuration in accordance with one or more embodiments of the present invention.

FIG. **18** shows a PDK transmit timeslot enable operation in accordance with one or more embodiments of the present invention.

FIG. **19** shows a location tracking system configuration in accordance with one or more embodiments of the present invention.

FIG. **20** shows a coordinator RDC (CRDC) location tracking handshake in accordance with one or more embodiments of the present invention.

FIG. **21** shows a configuration in which RDCs and PDKs are coordinated within a CRDC cell in accordance with one or more embodiments of the present invention.

FIG. **22** shows a CRDC framing and PDK timeslot response operation in accordance with one or more embodiments of the present invention.

FIG. **23** shows a CRDC beacon and PDK response handshake in accordance with one or more embodiments of the present invention.

FIG. **24** shows a PDK/RDC association in a CRDC cell in accordance with one or more embodiments of the present invention.

FIG. **25** shows an RDC beacon transmission in accordance with one or more embodiments of the present invention.

FIG. **26** shows a deep sleep state diagram in accordance with one or more embodiments of the present invention.

FIG. **27** shows an authorization denial handshake operation in accordance with one or more embodiments of the present invention.

FIG. **28** shows an authorization grant and association handshake in accordance with one or more embodiments of the present invention.

FIG. **29** shows a single cell with multiple PDK access in accordance with one or more embodiments of the present invention.

FIG. **30** shows multiple single cell RDCs with cell overlap in accordance with one or more embodiments of the present invention.

FIG. **31** shows a floor layout and cell distribution in accordance with one or more embodiments of the present invention.

FIG. **32** shows a gambling table with RDCs in accordance with one or more embodiments of the present invention.

FIG. **33** shows a CRDC beacon to central server flow in accordance with one or more embodiments of the present invention.

FIG. **34** shows a CRDC beacon to central server handshake in accordance with one or more embodiments of the present invention.

FIG. **35** shows a configuration of overlapping CRDC cells in accordance with one or more embodiments of the present invention.

FIG. **36** shows a c-beacon handoff for RDC-PDK communication in accordance with one or more embodiments of the present invention.

FIG. **37** shows a PDK wakeup and response state flow in accordance with one or more embodiments of the present invention.

FIG. **38** shows a configuration of an electronic game with an integrated RDC in accordance with one or more embodiments of the present invention.

FIG. **39** shows an electronic game player tracking and game enable handshake in accordance with one or more embodiments of the present invention.

FIG. **40** shows an electronic game player association handshake in accordance with one or more embodiments of the present invention.

FIG. **41** shows a configuration of an electronic game with an integrated RDC in accordance with one or more embodiments of the present invention.

FIG. **42** shows an electronic game player tracking and game enable handshake in accordance with one or more embodiments of the present invention.

FIG. **43** shows an electronic game player association handshake in accordance with one or more embodiments of the present invention.

Each of the figures referenced above depict an embodiment of the present invention for purposes of illustration only. Those skilled in the art will readily recognize from the following description that one or more other embodiments of the structures, methods, and systems illustrated herein may be used without departing from the principles of the present invention.

DETAILED DESCRIPTION

In the following description of embodiments of the present invention, numerous specific details are set forth in order to provide a more thorough understanding of the present invention. However, it will be apparent to one skilled in the art that the present invention may be practiced without one or more of these specific details. In other instances, well-known features have not been described in detail to avoid unnecessarily complicating the description.

In general, embodiments of the present invention relate to a technique for wirelessly communicating with a plurality of client devices without data collision. Particularly, in one or more embodiments, individual client devices are assigned time slots during the client devices may wirelessly communicate.

At perhaps a most basic level, one or more embodiments includes a personal digital key ("PDK") and a reader decoder circuit ("RDC"). In general, a PDK is a portable wireless device that may be conveniently carried by an individual to facilitate wireless tracking and/or allow the individual to wirelessly access various applications, assets, and/or services. As further described in detail below with reference to FIGS. **5-7**, a PDK may be any device that (i) may be worn, placed in a pocket, wallet, or purse of a user, or attached to equipment, (ii) has a bi-directional wireless communications transceiver, and (iii) stores public and/or secret electronic identification numbers, as possibly some set of cryptographic keys. The form factor of the PDK is not limiting, so long as the PDK may be portably, and preferably conveniently and seamlessly, carried by an individual. For example, a PDK may be in the form of a "key fob" or a card, or in certain embodiments, a PDF may actually be integrated with or implemented in another device, such as a watch or mobile computing device (e.g., cellular phone, personal digital assistant (PDA)).

An RDC, as used in one or more embodiments, is a device that can wirelessly interact with a PDK to link the PDK user with various applications, assets, and/or services. The RDC may be a fixed access point serving as a gatekeeper for a PDK requesting access to a particular system. An RDC may be used in various settings and/or applications. For example, an RDC may be physically incorporated into a casino floor itself, an electronic game, a doorway, a pedestrian traffic monitoring point, a personal computer application, an e-commerce device (e.g., an automatic teller machine (ATM)), or any other application requiring a secure transaction or access control.

Further, secure data exchange for various financial and/or retail applications may be facilitated through use of a PDK and RDC in accordance with one or more embodiments. For example, a purchasing system may be implemented whereby a consumer can purchase goods or services using his/her personal "key" (e.g., a PDK) based on the key being in detectable wireless proximity of a reader device (e.g., an RDC). The

purchase transaction may then be carried out based on some data exchange between the key and the reader device, where the key stores accessible, and possibly encrypted or encoded, information about the consumer (e.g., name, address, phone number, bank account information, biometric information, credit or debit card information). The validation or authentication of the consumer may occur either on the key itself and/or by the reader device. In the case of "on-key" validation, for example, the reader device may pass some information about the consumer (e.g., a biometric input, such as fingerprint data) to the key, which then matches the data provided by the reader device with permanently stored secure data about the consumer.

Various other applications or uses involving any number of PDK and RDC devices are possible in accordance with one or more embodiments. Accordingly, while examples of scenarios and applications are described herein for purposes of illustration and clarity, the present invention is not limited to any particular application, scenario, setting, or use.

Single Cell Operation of the RDC and PDK

Now referring to FIG. **1**, it shows a single cell **10** in which, at some point in time, an RDC **12** and a PDK **14** are present. The RDC **12** may be some fixed device that has a cell radius defined by its wireless coverage boundary. When an individual carrying the PDK **14** comes into proximity of the RDC **12** by entering a coverage area of the RDC **12**, a wireless communications session is initiated between the PDK **14** and the RDC **12**. If the RDC **12** determines that the PDK **14** is authorized to communicate, information between the PDK **14** and the RDC **12** may be securely exchanged. Information securely obtained from the user's PDK **14** may then be used locally or sent through a back-end communications channel to a central server (not shown). When the transaction completes or when the PDK **14** leaves the coverage area of the RDC **12**, wireless communication between the RDC **12** and the PDK **14** ceases. Thereafter, the RDC **12** may remain idle (i.e., be in a "tracking" mode) until a PDK again enters the cell **10**.

Unsynchronized Multi-Cell Operation of Multiple RDCs and PDKs

Now referring to FIG. **2**, in certain implementations, multiple RDC cells **20**, **22**, **24** may exist in an area. The RDCs in the multiple cells **20**, **22**, **24** may or may not be aware of each other, but are able to interact with one or more PDKs. The PDKs, in turn, are capable of interacting with the RDCs. As shown in FIG. **2**, there are three partially overlapping RDC cells **20**, **22**, **24**. An RDC **26**, **28**, **30** in cells **20**, **22**, **24**, respectively, is independent and may not be in association with the other RDCs. Although the cells **20**, **22**, **24** partially overlap, each RDC **26**, **28**, **30** is capable of wirelessly communicating with any PDK **29**, **31** within its cell boundary.

In one or more embodiments, the RDC **26**, **28**, **30** is capable of determining if energy is present on any given wireless channel. The RDC **26**, **28**, **30** may then determine the best channel to operate on and continue to place an identification marker (or "beacon") out for any PDK **29**, **31** that enters its cell boundary.

The PDK **29**, **31** itself may be responsible for locating an RDC **26**, **28**, **30** by searching through available wireless channels, communicating with an RDC **26**, **28**, **30**, and notifying the RDC **26**, **28**, **30** of its presence. In an implementation where two RDCs can communicate with one another (e.g., RDCs **26**, **28** in cells **20**, **22** shown in FIG. **2**), the RDCs may select different communication frequencies. However, in the case where cells overlap, but each RDC cannot directly communicate with one another (e.g., RDCs **28**, **30** in cells **22**, **24** shown in FIG. **2**), any PDK intending to access an RDC, may have to alert the RDC of possible collisions on the wireless channel on which the RDC is operating.

Synchronized Multi-Cell Operation of Multiple RDCs and PDKs

In certain implementations, multiple RDCs may be placed to allow an overlap of cells between each adjacent RDC within a confined area. This permits each RDC to be aware of its surrounding RDCs, thereby allowing synchronization of each RDC to the other. For example, now referring to FIG. **3**, there are shown three partially overlapping RDC cells **40**, **42**, **44** with RDCs **46**, **48**, **50**. The cell **40**, **42**, **44** of each respective RDC **46**, **48**, **50** overlaps the cell of the adjacent RDC **46**, **48**, **50**. In such a manner, each RDC **46**, **48**, **50** may initiate wireless communication with an adjacent RDC **46**, **48**, **50**. This begins a negotiation process among the RDCs **46**, **48**, **50** to determine which RDC **46**, **48**, **50** should be the coordinator and on what channel to communicate.

Although any of the RDCs **46**, **48**, **50** may be the coordinator, in the example shown in FIG. **3**, RDC **48** in cell **42** may be a favorable candidate. Its selection permits ubiquitous coverage of the RDCs **46**, **48**, **50** shown in FIG. **3**, additionally providing multiple transactions and timing alignment through a "daisy chain" whereby RDC **46** synchronizes RDC **48** and RDC **48** synchronizes RDC **50**.

Still referring to FIG. **3**, each RDC **46**, **48**, **50** may also share frequency and timeslot information among each other and with one or more PDKs. It is noted that if a PDK is located at an edge of, for example, cell **40**, that PDK may still monitor the other channels that adjacent RDCs **48**, **50** are operating on, but may not have access to these RDCs. Thus, in a configuration such as that shown in FIG. **3**, a PDK may be forced to consume more energy due to the monitoring of multiple channels. Further, it is noted that as cell density increases, more collisions may begin occurring and/or active communication times may increase.

Coordinated Multi-Cell Operation

Now referring to FIG. **4**, it shows an exemplar synchronized (or "coordinated") multi-cell system **60** in accordance with one or more embodiments. As will be apparent from the description below, a synchronized multi-cell system may provide ubiquitous PDK and RDC synchronization as well as PDK battery conservation within the system **60**. Further, in addition to ubiquitous synchronization, channel and frequency capacity may both be coordinated, thereby reducing collisions while increasing system throughput.

Turning now to FIG. **4** particularly, a coordinator RDC ("CRDC") **62** has ubiquitous coverage of a plurality of cells **64**, **66**, **68** in the system **60**. In one or more embodiments, the CRDC **62** provides beacon transmissions, which can be used to synchronize a plurality of devices within the coverage area **76** of the CRDC **62**. In other words, by providing wide-area coverage, a plurality of devices, both RDCs **70**, **72**, **74** and PDKs (shown, but not labeled in FIG. **4**), in the coverage area **76** are able to monitor a wireless transmission beacon broadcast by the CRDC **62** and determine how and when to communicate in a coordinated manner. Further, in one or more embodiments, the CRDC **62** may broadcast additional information including, but not limited to, a beacon transmission rate, framing information, channel information, system identification, and/or cluster identification. Moreover, it is noted that although the CRDC **62** may provide timing and certain system related information, RDCs **70**, **72**, **74** and PDKs may still communicate among themselves.

As described above with reference to FIGS. **1-4**, there are at least three different types of devices (or software entities) that may be used, for example, in a synchronized multi-cell system, such as that shown in FIG. **4**. A PDK is a trackable

device having secure electronic keys and that may be portably carried by a user. An RDC is a device that acts as a gatekeeper controlling access of a PDK to a particular system. A CRDC is a device that is used to synchronize one or more RDCs and PDKs within a particular geographic area formed of either a single cell or multiple cells. A more detailed description of each of these components is now provided below.

PDK

Now referring to FIG. **5**, it shows an example PDK **80** in accordance with one or more embodiments. Based on a specific application or use of the PDK **80**, the PDK **80** may have different configurations for interacting with the PDK user. For example, the PDK **80** may have no user input mechanism or display, may have a single button input mechanism, may have a multi-button input mechanism, may have a biometric input mechanism, and/or may have an interactive user input mechanism and/or display.

As shown in FIG. **5**, the PDK **80** has a wireless radio frequency (RF) media access control (MAC) and physical layer device **82** that facilitates bi-directional communications with external wireless RF devices, such as an RDC (not shown). In one or more embodiments, the wireless RF MAC and physical layer device **82** may communicate according to an IEEE 802.15.4 protocol. However, in one or more other embodiments, the PDK **80** may be capable of communicating according to one or more different wireless protocols.

The PDK **80** also has a service and application layer controller **84** that includes a MAC portion **94** that serves as an interface with the wireless RF MAC and physical layer device **82**. Further, the service and application layer controller **84** also includes portions that provide specific functions used to protect electronic keys and services of the PDK **80**. Further still, the service and application layer controller **84** may support an optional user interface **86**, which if implemented, allows user interaction with the PDK **80**. A cryptography engine **88** may also be resident on the PDK **80**.

Now also referring to FIG. **6**, it shows a non-volatile memory storage **90** and a volatile memory storage **92** of the PDK **80**. These two devices **90**, **92** are related to security storage. In one or more embodiments, these devices **90**, **92** may be accessible by an RDC (not shown) having the appropriate security algorithms and by private service providers having the correct security information. However, in one or more other embodiments, certain secured data may not be wirelessly communicated at all, in which case, validation or authorization occurs on the PDK **80** itself.

Specifically as to the non-volatile memory storage **90**, a public serial number may be used to identify the PDK **80** and allow secure look-up of a secure serial number and a cryptography key via a remote server (not shown). The secure serial number may be thought of as being equivalent to, for example, encoded user identification information stored in a magnetic strip of a credit card, whereby such information is not visible to the outside world. The cryptography key may be used to allow decoding of the secure serial number from, for example, an RDC (not shown).

Further, it is noted that in one or more embodiments, the non-volatile memory storage **90** and associated parameter lengths may be dynamically assigned, with overall constraints depending on, for example, available memory in the PDK **80**.

Now, specifically as to the volatile memory storage **92**, this area may be used for security and may allow a service provider to store a profile containing secret keys and other secure information, such as privilege information. A service provider identification value may be stored to allow the service provider to easily identify the user. In addition, a service provider service identification value may be stored and used to allow that service provider to access that information. The PDK **80** validates that service provider identification value via the service provider secret key before allowing access to that service provider's profile area in the PDK **80**. Further, as shown in FIG. **6**, the volatile memory storage **92** may have a number of service provider profiles.

Now also referring to FIG. **7**, the service provider profile area may be of a variable length and allow a service provider the flexibility to store various parameters. The length may be determined by a byte count following the service provider's secret key in the memory area as shown in FIG. **7**.

RDC

Next, turning to a more detailed description of an RDC **100** according to one or more embodiments, reference is made below to FIGS. **8** and **9**. In general, an RDC **100**, as described above, may be fixed and used to allow a PDK access into a particular system (e.g., gaming/casino system, financial institution, retail system). The RDC **100** may have different configurations to support different types of secure transactions. Some examples of applications and uses of RDCs include, but are not limited to, casino slot machines and gaming consoles, secure entryway control, user/equipment location tracking, personal computers and components thereof (e.g., disk drives), financial institution interactions, and retail purchasing. In the case of a personal computer, or any computer system for that matter, a reader device, such as an RDC, may be used to control access to certain data stored in the computer system. Thus, in such embodiments, an RDC **100** may be thought of as providing a form of digital content management.

In certain cases, the RDC **100** effectively acts as a gatekeeper allowing authorized individuals access to specific information or transactions. In other cases, because an RDC **100** may use proximity detection for determining if a PDK is within a particular geographical area, the RDC **100** may also be used for tracking one or more PDKs within a given area or network. In still other cases, an RDC **100** may be used for both location tracking and secure transaction purposes.

FIG. **8** shows a type of RDC **100** that uses a single wireless RF MAC and physical layer device **102**. In RDC **100**, communications are passed through the single wireless RF MAC and physical layer device **102**. The single wireless RF MAC and physical layer device **102** facilitates bi-directional communication with one or more external RF wireless devices, such as a PDK (not shown). Thus, the single wireless RF MAC and physical layer device **102** may communicate with both PDKs according to assigned time slots (further described below) and one or more CRDCs (described in further detail below). Further, it is noted that in one or more embodiments, the single wireless RF MAC and physical layer device **102** may wirelessly communicate according to an IEEE 802.15.4 protocol. However, in one or more other embodiments, the RDC **100** may be capable of communicating according to one or more different wireless protocols.

The RDC **100** also has a service and application layer controller **104**. The service and application layer controller **104** has a MAC portion **106** specific to a wireless protocol of the RDC **100**. The service and application layer controller **104** may further provide functions related to associating and tracking PDKs (not shown), as well as providing information back to a service provider.

The service and application layer controller **104** includes system parameters and configuration information **108** that may be used to identify the RDC **100** and define how the RDC **100** operates within a given environment. Further, the system parameters and configuration information **108** may define

how the RF link is time slotted and/or how RF frequencies are used in the system. In one or more embodiments, these values may be optimized to reduce power consumption within one or more PDKs (not shown).

Still referring to the RDC **100** shown in FIG. **8**, a cryptography engine **110** may also be present. One or more of various storage elements may also exist in the service and application layer controller **104**. A secure key storage area **112** may be programmed to define public, secret, and/or cryptography keys for the RDC **100**.

Further, in one or more embodiments, the service and application layer controller **104** may have additional memory areas, one or more of which may dynamically change dependent on system changes and wireless PDK connections. A volatile service provider storage **114** may allow a service provider to store semi-static information related to a specific PDK (not shown) or group of PDKs (not shown) for real-time access for those devices. An example might relate to a hotel room door lock. With a hotel room door, service provider information related to a PDK may be stored in the RDC. When a user comes within proximity of the door, the door could unlock. Thus, in this example, the RDC is not required to interface with a back-end server in real-time, thereby reducing bandwidth consumption to the back-end server, while allowing the user immediate access. Moreover, in one or more embodiments, the RDC may have a connection to a network or other infrastructure for receiving control signals as to which PDKs should be allowed to unlock the door.

The service and application layer controller **104** may also have a proximity tracking PDK list **116** that includes PDK identity information, signal quality metrics, and/or time stamps for each PDK (not shown) that is in proximity of the RDC **100**. Such information may be used in the RDC **100** to perform an operation and/or may be relayed to a back-end server when, for example, location tracking is desired.

Still referring to FIG. **8**, the service and application layer controller **104** may also have an associated PDK parameter storage **118**. The associated PDK parameter storage **118** may contain a list of one or more PDKs (not shown) actively performing transactions with the RDC **100**. It is noted that in one or more embodiments, although such transactions are performed with the RDC **100**, the actual processing result of the RDC **100** to/from PDK transaction may be passed to a back-end server for further processing.

A service provider interface **120** may allow both control and query of the RDC **100**. The service provider interface **120** may further provide the transport for keys from a PDK (not shown). In one or more embodiments, the service provider interface **120** may use a universal asynchronous transmitter receiver (UART) interface and may allow some level of control and status of the RDC **100**.

An external service provider controller **122** may be attached to the service provider interface **120** with a system stack **124** residing in the external service provider controller **122**. The system stack **124** may allow a third party to easily interface with the RDC **100**, possibly requiring function calls to the system stack **124**. Further, the external service provider controller **122** may provide translation of data. It is still further noted that the external service provider controller **122** and the RDC **100** may reside on the same physical component (e.g., circuit board).

Now referring to FIG. **9**, it shows another type of RDC **130**, which has an additional wireless RF MAC and physical layer device **132**. In this configuration, components having like reference numbers as those reference numbers in FIG. **8** function identically or similarly to the corresponding components in FIG. **8**. The additional wireless RF MAC and physical layer device **132** may be used to maintain synchronization with a CRDC (not shown) and pass networking related information, while the other wireless RF MAC and physical layer device **102** may be used to communicate with one or more PDKs (not shown) within a cell of the RDC **130**. Further, the service and application layer controller **104** may have an additional MAC portion **134** to interface with the additional wireless RF MAC and physical layer device **132**.

Still referring to the RDC **130**, the use of dual wireless transceivers **102**, **132** may allow for increased throughput and efficient use of the RF spectrum available to the system. Thus, in other words, these multiple wireless links allow simultaneous reception of data from client devices (e.g., PDKs) and of CRDC timing information on separate channels, thereby eliminating the need for back-channel synchronization of the network. Further, the multiple wireless links may allow for the simultaneous proximity sensing of multiple client devices (e.g., PDKs) in a "tracking" mode, along with the association of a client device with one particular cell for wireless application (e.g., secure transaction) purposes. For example, an RDC serving as a wireless player tracking device on a casino floor may, while keeping track of multiple transient players entering and leaving the zone of coverage of that particular tracking device, invite a particular player to begin a gaming session. This session may also include the exchange of player information with, for example, both the game and its back-end server to allow credit for games played and money spent. In another scenario, the system may facilitate another entire suite of applications, such as, for example, unlocking a hotel room door, while simultaneously keeping track of unrelated client devices coming and going within its coverage range.

CRDC

Next, turning to a more detailed description of a CRDC according to one or more embodiments, a CRDC may, for example, be an RDC of either of the types described above with reference to FIGS. **8** and **9**. At least one difference, however, between a CRDC and an RDC is that the CRDC has increased RF power output, or more generally, casts a broader range of wireless coverage. Another difference is that, in one or more embodiments, a CRDC may not communicate bi-directionally with a PDK, whereas an RDC of the types described above with reference to FIGS. **8** and **9** may. Moreover, a CRDC may be capable of communicating with another CRDC, and may also be capable of communicating with an RDC. It is noted that CRDC-CRDC communication may allow for frame synchronization and frequency planning without requiring a wired connection between the CRDCs. The same may be true for CRDC-RDC communications. In certain implementations, it may occur that CRDC cell boundaries do not overlap, and thus, the corresponding CRDCs may not be able to directly communicate with another. In this case, an RDC that is between the cells may communicate with both CRDCs and act as a communication bridge to pass frequency and other control information in an effort to coordinate the system.

Still describing the general application and use of a CRDC in accordance with one or more embodiments, the CRDC may serve as a stand-alone wireless beacon that may be used to coordinate the timing and activities of individual, physically separated wireless providers (e.g., RDCs) with defined coverage areas, along with their clients (e.g., PDKs) in an autonomous, wireless proximity sensing and data transfer network. A CRDC may also be used to propagate system-wide information (e.g., periodic changes in cryptographic keys), thereby relieving traffic otherwise loading a wired back-end network linking individual cells to the back-end system. Thus, the CRDC may act as a system-wide master

clock across multiple cells that may not be close enough to synchronize with each other directly without a wired connection.

Wireless Protocol

As described above, a system in accordance with one or more embodiments may rely, or at least partly be based, on an IEEE 802.15.4 protocol. In relation to a protocol usable in one or more embodiments, a "timeslot" is defined as a period of time that information is communicated between two devices. FIG. **10** shows an example of portions of a timeslot in accordance with one or more embodiments. The timeslot is divided into a frame (or physical packet data unit (PPDU)) and inter-frame spacing (IFS). The frame includes synchronization information and carries the payload of data. The IFS allows time for a receiving end unit to process the data in the frame and transmitter turn-around time. Both the PPDU and the IFS may be variable in length as determined by an amount of data carried in the frame.

The frame is broken down into a sync header (SHR), a physical header (PHR), and a physical service data unit (PSDU). The SHR may contain a preamble sequence and start-of-frame delimiter (SFD) that allows a receiving device to acquire the RF signal and synchronize to the frame. The PSDU may then be used to carry both 802.15.4 MAC and user data information. Further, it is noted that the PSDU may be of a variable length that is determined by the type of MAC and data information being carried.

Still referring to FIG. **10**, the frame may be further divided into symbols, which, in turn, are divided into bits. In one or more embodiments, each symbol may includes 4 bits that are sent least significant bit to most significant bit at the base band level.

Now referring to FIG. **11**, a "superframe" is formed of multiple timeslots. The superframe may be used in a beacon-enabled synchronous network where PDKs can find an RDC and/or CRDC fixed device. The superframe may allow a PDK to efficiently determine if an RDC is present on any given frequency.

The superframe may be configured such that timeslot **0** (TS_0) is the "beacon timeslot." Each superframe that is transmitted may start with a beacon timeslot. Further, each timeslot may be equally spaced so that a PDK and RDC can communicate.

Further, it is noted that in one or more embodiments, a superframe may be of a variable length dependent on the resolution to a timeslot. The initial number of timeslots within a superframe may be, for example, 16; but, in one or more other embodiments, a superframe may have a different number of timeslots.

Now referring to FIG. **12**, a "coordinator superframe" (c-superframe) may be formed of multiple superframes. In one or more embodiments, a c-superframe may be generated by a CRDC. A c-superframe may provide one or more advantages over a superframe. For example, a c-superframe may provide better battery management for a PDK, as well as provide distributed superframe and timeslots in a high density networking environment.

As shown in FIG. **12**, a c-superframe may have multiple superframes. Because each superframe may have a beacon, as described above with reference to FIG. **11**, multiple beacons may be transmitted per c-superframe. This may allow a PDK to quickly determine if it is within a system. A c-superframe may also number the superframes, so that both an RDC and a PDK can realize their position within the framing structure.

FIG. **13** shows an overall framing structure of a timeslot as described above with reference to FIG. **10**, a superframe as described above with reference to FIG. **11**, and a c-superframe as described above with reference to FIG. **12**.

Beacons

As discussed above with reference to FIG. **11**, a beacon may be sent in every superframe. The beacon is used to alert PDKs (and RDCs when a CRDC is present) of system information and timing of the framing structure employed. In one or more embodiments, such a configuration may be implemented using an IEEE 802.15.4 protocol. However, in one or more other embodiments, communication may occur according to one or more different wireless protocols.

In a single cell configuration in which one RDC is present (shown, for example, in FIG. **1**), the beacon may be transmitted in timeslot **0** of a superframe boundary. By transmitting the beacon periodically, a PDK may wake up and find the beacon within a short period of time and realize that it is within some particular network.

In an unsynchronized multi-cell configuration in which multiple RDCs are geographically located near each other, but no synchronization between RDCs is implemented (shown, for example, in FIG. **2**), a PDK may still wake up, detect the presence of the RDCs, and synchronize and communicate with each RDC due to the presence of the beacon on each RDC.

In a high density area in which multiple RDCs are present, a CRDC may most likely be present. In such a configuration, the CRDC may transmit the beacon, and all RDCs and PDKs in the coverage area of the CRDC align to the CRDC beacon. The CRDC may send a beacon on each superframe, as well as a c-superframe and other configuration information to the RDCs and PDKs.

Now referring to FIG. **14**, in a single cell configuration (shown, for example, in FIG. **1**), a beacon is periodically output based on a specific number of timeslots. Further, in one or more embodiments, the beacon may be used in accordance an IEEE 802.15.4 protocol, with additional data attached indicating it is an RDC. At the end of each superframe, there may exist an additional idle period that allows tolerance in an over-the-air protocol.

After a beacon is transmitted, a PDK may immediately respond provided it follows the rules of what is know in the art as "carrier sense multiple access-collision avoidance" (CSMA-CA). If a PDK finds that the channel is busy in the current timeslot, the PDK may back-off and attempt again to access the RDC in another timeslot following the same rules. In the case the PDK is not able to communicate with the RDC, the PDK may wait for the next beacon and attempt again.

FIG. **15** shows a single cell configuration in accordance with one or more embodiments. As shown in FIG. **15**, a single fixed RDC **140** may be connected to a back-end server (not shown). The single cell system shown in FIG. **15** includes, for example: a computing controller with an operating system, an application, a back-end server interface, and a system stack; the RDC **140**, which is the gateway for a PDK and performs authorization (the system stack and RDC **140** together allow a user who has a PDK to access the application dependent on authorization from the back-end server); and a PDK **142** that includes necessary security information and is within reasonable proximity to wirelessly communicate with the RDC **140**.

An example handshake of the PDK **142** with the RDC **140** is shown in FIG. **16**. The RDC **140** outputs a periodic beacon based on timeslot **0** of a superframe. Eventually, a user walks within the coverage area of the RDC **140**, and the user's PDK **142** detects the beacon from the RDC **140**. The PDK **142** determines if it is registered to this RDC **140** (or network), and, if so, responds with a PDK location response. The RDC **140** then detects the PDK location response and performs a

link request to the PDK **142**. The PDK **142** then accepts the request by replying with a link grant, and the two devices **140**, **142** are now in data exchange mode. In data exchange mode, the two devices **140**, **142** may transfer specific security information that result in the RDC **140** enabling access to the system through the system stack, computing controller, and/or back-end central server.

Periodically, data may be exchanged between the RDC **140** and the PDK **142** to ensure that the PDK **142** is still within close proximity of the RDC **140**. As long as data exchange continues on a periodic basis, the application may remain enabled and the user can continue to access the application.

After some amount of time, the user walks away from the RDC **140** causing the data exchange to cease, in which case, the system stack indicates to the computing controller that the PDK **142** is out of range. The computing controller then disables the application to prevent unauthorized access. Regardless of data exchange, the RDC **140** may continue to transmit periodic beacons to guarantee that other PDKs may gain access to the application.

Now referring to FIG. **17**, a configuration of a "coordinator beacon" (c-beacon) is shown. The coordinator beacon may be generated by a CRDC, or RDC behaving like a CRDC. As described above, a CRDC may cover a large geographic area covering a plurality of RDCs and PDKs within that area. The c-beacon may be a standard beacon sent in the first timeslot of each superframe as shown in FIG. **17**.

A c-beacon, in accordance with one or more embodiments, may have properties that are different than those associated with an IEEE 802.15.4 standard beacon. For example, the standard c-beacon carries a field indicating the beacon is a c-beacon. Further, a c-beacon, in normal operation, is a unidirectional transmission from a CRDC. Further still, a c-beacon may contain other c-beacon related information: number of slots in a superframe; number of superframes in a c-superframe; the channels on which adjacent CRDCs operate; current superframe number; current c-superframe number; site ID; CRDC ID; PDK superframe mask; and PDK timeslot mask.

Further, it is noted that while beacons may be transmitted from a CRDC on timeslot **0** of each superframe, remaining timeslots of a superframe may be left open for unsynchronized communications between PDKs and RDCs. The term "unsynchronized" is used to describe communications between the PDKs and the RDCs because the RDC and PDK share a common CRDC beacon, but the PDK may not get synchronized directly to an RDC beacon. In this manner, the PDK and RDC may appear to represent a peer-to-peer network.

C-beacon information described above relates to configuration fields that allow the system to operate efficiently when using a CRDC. In the case of, for example, a large scale system, a service provider of the system may have knowledge of RDC coverage relative to the CRDC. The following description provides details of these fields.

A "superframe_len" field may be governed by an IEEE 802.15.4 protocol. The number of slots may be from, for example, 2^1 to 2^{14}. The number of slots in a superframe may be used to define the repetition rate for the beacon.

A "c-superframe_len" field may be used to define a higher layer counter used for extended power savings in a PDK. The c-superframe_len value may also define the number of beacons within a superframe. If the superframe is configured to not have a beacon, then this field may be ignored.

Name	Type	Valid Range	Description
C-Superframe_Len	Integer	0 to 15	Defines the number of Superframes in a C-Superframe. Number of Superframes is defined as $2^{C\text{-}Superframe_Len}$

A "CRDC_chan_flags" field may be used to indicate to a PDK what channels are used by adjacent CRDCs.

Name	Type	Bit	Description
CRDC_Chan_Flags	Binary		When any bit in this field is set to a 1, an adjacent CRDC is transmitting on that frequency.
	Binary	0	1 = Channel 0 available 0 = Channel 0 not available
	Binary	1	1 = Channel 1 available 0 = Channel 1 not available
	Binary	2	1 = Channel 2 available 0 = Channel 2 not available
	Binary	3	1 = Channel 3 available 0 = Channel 3 not available
	Binary	4	1 = Channel 4 available 0 = Channel 4 not available
	Binary	5	1 = Channel 5 available 0 = Channel 5 not available
	Binary	6	1 = Channel 6 available 0 = Channel 6 not available
	Binary	7	1 = Channel 7 available 0 = Channel 7 not available
	Binary	8	1 = Channel 8 available 0 = Channel 8 not available
	Binary	9	1 = Channel 9 available 0 = Channel 9 not available
	Binary	10	1 = Channel 10 available 0 = Channel 10 not available
	Binary	11	1 = Channel 11 available 0 = Channel 11 not available
	Binary	12	1 = Channel 12 available 0 = Channel 12 not available
	Binary	13	1 = Channel 13 available 0 = Channel 13 not available
	Binary	14	1 = Channel 14 available 0 = Channel 14 not available
	Binary	15	1 = Channel 15 available 0 = Channel 15 not available

A "superframe_cnt" field may be used to define a current superframe (or beacon) count within a c-superframe. If the superframe is configured to not have a beacon, then this field may not be transmitted.

Name	Type	Valid Range	Description
Superframe_Cnt	Integer	0 to 65535	Defines the current Superframe count.

A "c-superframe_cnt" field may be used to define a current c-superframe count. If the superframe is configured to not have a beacon, then this field may not be transmitted.

Name	Type	Valid Range	Description
C-Superframe_Cnt	Integer	0 to 65535	Defines the current C-Superframe count.

A "PDK_sf_ts_msk" field may be used to define the bits of a superframe count and the timeslot count to use for PDK superframe and timeslot sequencing while in a tracking mode. If the superframe is configured to not have a beacon, then this field may not be transmitted.

Name	Type	Valid Range	Description
PDK ®_SF_TS_Msk			Defines which bits are to be used for determining PDK ® superframes and timeslots to communicate with an RDC during location tracking.
Superframe Mask	Binary	0000000000000 to 1111111111111	Defines the Superframe mask 1 = enable bit 0 = mask bit
Timeslot Mask	Binary	000 to 111	Defines the Timeslot mask 1 = enable bit 0 = mask bit

The PDK_sf_ts_msk value may be used in conjunction with a portion of the service provider unique PDK identification value and may be used to determine the exact superframe and timeslot the PDK is permitted to transmit a location identifier back to the RDCs. The necessary logic and variables required to perform this operation are illustrated in FIG. **18**.

Further, in one or more embodiments, to set the mask value of a particular PDK, a "set_pdk_msk_val" function may be used. The mask may be used over the superframe and timeslot counts and service provider's PDK ID to determine the superframe and timeslot the PDK is active on in the framing structure. In other words, the set_pdk_msk_val function may be used to set a mask for the PDK in an effort to establish at what times the PDK can communicate with an RDC. The function may return a pass or fail indication to indicate whether the mask has been successfully set. Conversely, to obtain the mask value being used by a particular PDK, a "get_pdk_msk_val" function may be used to retrieve the current PDK superframe and timeslot mask parameters.

Using, for example, the masking approach described above, individual client devices (e.g., PDKs) within a given cell (e.g., an RDC's wireless coverage area) may be addressed via real-time re-provisioning on command. Thus, in other words, by reserving time slots for both client device transmission and reception (based on masks established by the network), client transmission and reception time slots may be efficiently coordinated to reduce collision likelihood and allow for tiered client access, assignment of specific classes, and/or targeting an individual user for preferential, non-contended system access. Further, in one or more embodiments, bit masks may be changed to include or exclude specific users (or classes of users). Still further, in one or more embodiments, bit masks may be changed to dynamically alter access to the network by users or classes of users as traffic load on the network changes. Moreover, it is noted that once a specific client exits the network, previously reserved time slots of that client may be reassigned to one or more other client devices in the network.

To provide an example, there may be multiple client devices (e.g., PDKs) in proximity of a particular fixed reader device (e.g., an RDC). Each of these client devices, other than providing a location response, may request some data exchange with the reader device in order carry out a secure transaction. In an effort to reduce collision and coordinate the time slots that each client device "talks" with the reader device, a mask may be communicated to each client device to set the times at which the client device is to communicate with the reader device. Further, certain ones of the client devices may be afforded some level of priority, in which case the masks would be set accordingly. For example, masks may be set according to a class of a user of a PDK or to a class of the PDK itself. To facilitate such differentiation, priority level or tier level data may be present in an RDC or CRDC to be used when setting a mask for a particular client device or group thereof. Thus, in such a manner, there is provided a technique for dynamic real-time tiered client access. Moreover, it is noted that in one or more embodiments, a CSMA-CA mechanism may be implemented as a backup approach to facilitate data exchange.

Further, in one or more embodiments, utilization of a tiered access system to transfer and receive data to/from a specific user or client device anywhere within a wireless network may allow for simultaneously operating network-wide two-way communications without altering the network. Thus, in other words, although one or more embodiments relate to an autonomous wireless proximity sensing and data transfer network, such a network may be used to notify, page, or transfer data possibly unrelated to one or more of the applications which a majority of the client devices on the network are using (or typically use) (such applications being for the purposes of, for example, tracking, access control, and/or digital rights management). In another example, a network device may be able to associate a PDK ID to a particular user and then provide messaging capability based on the identity of the user. Thus, in this case, one or more embodiments may be combined with tiering to provide multiple messaging levels for different users.

The ability to assign tiers to the network may also enable low latency responses from targeted client devices. Accordingly, by integrating features into the client device that may take advantage of a two-way network capability, a system in accordance with one or more embodiments may allow for the simultaneous communication and control of external devices via real-time client command along with a general purpose low data rate two-way network.

Continuing with the description of c-beacon information in accordance with one or more embodiments, a "site_ID" field may carry a value that each CRDC transmits to all PDKs and RDCs within a coverage area of the CRDC. The site_ID value allows a PDK to determine if it can access the current site or if it needs to request permissions to access the site's network.

Name	Type	Valid Range	Description
Site_ID	Integer	0 to 65535	Defines the current sites ID.

A "CRDC_ID" field may carry a value that each CRDC transmits to all PDKs and RDCs within a coverage area of the CRDC. The CRDC_ID may be used, for example, for geographical reference.

Name	Type	Valid Range	Description
CRDC_ID	Integer	0 to 65535	Defines the current CRDC ID.

Now turning to a description of a use of a c-beacon, reference is made to FIGS. **19** and **20**. A location tracking example in accordance with one or more embodiments is shown in FIG. **19**. There are various different types of devices in the system **150** shown in FIG. **19**. First, there is a CRDC **152** that may provide system information and facilitate synchronization for RDCs and PDKs. The system **150** also has RDCs **154**, **156**, which listen for PDKs and report the status of each PDK found within its respective cell **158**, **160**. The system **150** further includes a PDK **162** that is mobile and capable of being moving around. Further, the system **150** has a server **164**, which is the back-end computer that controls the CRDC **152**, acquires information from the RDCs **154**, **156**, and may provide a graphical representation to monitoring personnel via a computer monitor (not shown).

Accordingly, FIG. **19** shows how location tracking of a PDK is possible and a handshake between different parts of the system **150**. A handshake example of PDK location tracking in a CRDC configuration is shown in FIG. **20**. The CRDC **152** periodically broadcasts a beacon in timeslot **0** of each superframe. Enabled client devices within the CRDC cell boundary receive the beacon. After the PDK **162** receives the beacon and determines that the beacon is from a system that it is registered to, the PDK **162** broadcasts a PDK location response that is received by the RDCs **154**, **156**. Both RDC **154** and RDC **156** receive the response, log the PDK ID, the signal quality metrics, and timestamps the information. The packet of information may then be sent to the server **164**, where the server **164** processes the data from each RDC **154**, **156** and performs a location estimation that may then be presented to an operator. At the beginning of the next superframe, the beacon is again transmitted and the process is repeated until the PDK **162** can no longer be heard due to it being out of range.

Now referring to FIG. **21**, it shows a system **170** in which both PDKs and RDCs are coordinated within a CRDC cell boundary. Because, in one or more embodiments, RDCs are stationary devices and may occasionally be relocated, the RDCs may be initially coordinated by manually configuring both timeslots and frequencies they operate on.

As shown in FIG. **21**, one CRDC cell **172** and **6** smaller RDC cells **174**, **176**, **178**, **180**, **182**, **184** exist. The CRDC cell **172** provides ubiquitous coverage to the RDC cells **174**, **176**, **178**, **180**, **182**, **184**. Each RDC cell **174**, **176**, **178**, **180**, **182**, **184** overlaps its adjacent RDCs in a manner resulting in a high rate of collisions if the RDCs **186**, **188**, **190**, **192**, **194**, **196** attempt to communicate with a PDK **198** on the same channel. It is envisioned that all the RDCs **186**, **188**, **190**, **192**, **194**, **196** could be on different frequencies, but then the PDK **198** would be required to access each frequency for some duration, resulting in reduced battery life. To eliminate interference between the RDCs **186**, **188**, **190**, **192**, **194**, **196** and provide the PDK **198** with an efficient means to conduct secure transactions, the system **170** shown in FIG. **21** may be used.

To optimize the system **170** for battery conservation of the PDK **198**, each RDC **186**, **188**, **190**, **192**, **194**, **196** may be provided with a dual RF physical interface. The primary interface is for monitoring a c-beacon and the PDK **198** located in close proximity, and to signal the PDK **198** to switch to another channel for further communications with that particular RDC. In this case, the CRDC (not shown) may transmit c-beacons, whereby all RDCs and PDKs will gain timing synchronization.

Based on the configuration shown in FIG. **21**, the c-beacon fields described above may be configured as follows: superframe_len=4 (2^4=16 timeslots); c-superframe_len=4 (2^4=16 superframes); CRDC_chan_flags=b0000000000000010 (most significant bit to least significant bit—CRDC channels); PDK_sf_ts_msk=b000000000011111 (mask all but 2 least significant bits of the superframe count and don't mask any timeslot bits); site_ID=0x1234 (arbitrary site identification); and CRDC_ID=0x0001 (arbitrary CRDC_ID).

Another piece of information that may be inherent to the PDK is a unique service provider PDK ID. The unique service provider PDK ID is located in the PDK and may be compared with the superframe and timeslot count prior to applying the mask, but may not affect the superframe and timeslot counts from a time reference standpoint. In this case, the unique service providers PDK ID for this PDK may be equal to 0x0003.

Using the above described values for the c-beacon, the following system attributes result (the superframe is 16 timeslots long, so once out of every 16 timeslots, a c-beacon is created allowing the PDK to determine if a system with the correct system ID exists): the c-superframe length is set to 16; the CRDC_chan_flags indicate to the PDK the number of CRDC channels available in the system; the PDK_sf_ts_msk indicates which bits to logically AND with the superframe and timeslot count to determine which slots to respond on (in this case, the PDK_sf_ts_msk is a hex value of 0x001F that is ANDed with the superframe and timeslot count resulting in one response timeslot); and the site_ID and CRDC ID are arbitrary values and may be left to the service provider for selecting unique identification values.

Using the above described exemplar system configuration information and having a PDK with a unique service provider ID of 0x0003, FIG. **22** shows how the PDK may operate in a CRDC framing structure. As shown in FIG. **22**, the c-superframe_len is set to 16—thus, the superframe count counts from 0 to 15 and then starts over at 0. Each superframe then includes 16 timeslots of which the first timeslot is timeslot **0** and includes the beacon. The superframe_len is also set to 16—thus, there are 16 timeslots for each superframe. Again, the timeslots are numbered from 0 to 15, and restart at 0 for each superframe.

In one or more embodiments, based on the parameters set by the system and the unique service provider PDK ID, the PDK may periodically transmit a PDK location response in timeslot **3** of each superframe on a modulo **4** basis. This causes the PDK to respond in timeslot **3** of superframes **0**, **4**, **8**, and **12** of a c-superframe. It is noted that the PDK may follow the CSMA-CA standard and if the PDK cannot respond in its timeslot, it may wait for its next designated superframe and timeslot to respond.

If an RDC requests to begin communication with a PDK, the RDC may immediately respond on the next even timeslot, which, in this case, is timeslot **4**. Any RDC may respond, but RDCs may have to use the CSMA-CA rule prior to responding to the PDK transmission. If an RDC begins communications with a PDK, the following timeslot may be used to instruct the PDK to go to another channel, where bi-directional communications may commence.

Further, in one or more embodiments, an active superframe may occur when unmasked bits in the superframe count equal the corresponding unmasked bits in the unique service pro-

viders PDK ID. In this case, the superframe mask is a value of 0x003 and the unique service provider PDK ID is 0x0003.

With this information, the following calculation occurs:

	*b*000000000000	*superframe* count [15:4]
xor	*b*000000000000	unique Service Provider *PDK® ID* [14:3]
	*b*000000000000	result of *xor* function
and	*b*000000000111	*Superframe* Mask [11:0]
	*b*000000000000	result of AND function
	nor all bits	result is true
	1	

As shown above, a portion of the superframe count is exclusive-ORed with a portion of the unique service provider PDK ID. The result of the exclusive-OR is all 0's. Then, the superframe mask is ANDed with the result of the exclusive-OR function. The AND operation also results in all 0's. The result of the AND function is then compared to zero by NORing all of the bits together and results in a 1 or "true" output, indicating the bits compared between the superframe count and the unique service provider PDK ID are a match.

An active timeslot occurs when the unmasked bits in the 3 most significant positions of the timeslot count equal the unmasked bits in the unique service provider PDK ID's **3** least significant bits and the timeslot count least significant bit is a 1 (the PDK transmits on odd frames). In this case, the timeslot mask is a value of 0x7 and the unique service providers PDK ID's **3** least significant bits are 0x3.

With this information, the following calculation occurs:

	*b*011	timeslot count [3:1]
xor	*b*011	unique Service Provider *PDK® ID* [2:0]
	*b*000	result of *xor* function
and	*b*111	Timeslot Mask
	*b*000	result of AND function
	nor all bits	result is true
	1	

As shown above, the timeslot count is exclusive-ORed with a portion of the unique service provider PDK ID. The result of the exclusive-OR is all 0's. Then, the timeslot mask is ANDed with the result of the exclusive-OR function. The AND operation also results in all 0's. The result of the AND function is then compared to zero by NORing all of the bits together and result in a 1 or "true" output, indicating the bits compared between the timeslot count and the unique service provider PDK ID are a match.

The last portion of the calculation that needs to be completed (as described above) is to verify the last bit of the slot count is a '1,' indicating an odd slot. If the unmasked superframe and timeslot bits do not match the appropriate unique service provider PDK ID, the results will be "false" and no match will occur. In the examples described above, the superframe mask was set to unmask the 2 least significant bits of the superframe count to show that it is possible to allow a PDK to come up more frequently than the c-superframe count. By increasing the superframe mask to 4 bits, this example would allow the PDK to respond once per c-superframe (because the c-superframe was set to 16) and the modulo for the mask would be 2^4, or 16.

The timeslot mask may be set to allow all timeslot bits to be correlated to determine the timeslot, allowing the PDK to respond once per superframe. Further, it is noted that it may be possible to mask some of the timeslot bits to increase the number of times a PDK can respond within a superframe.

In one or more embodiments, a PDK may periodically wake up to determine whether it is within a particular system. Upon a periodic wake up, the PDK will detect a c-beacon indicating that the particular system is present, along with system information. The PDK will collect the system information and determine the current superframe count of a c-superframe. The PDK may also put parameters (e.g., PDK_s-f_ts_msk) in place to start immediate battery save in the system.

Based on an approximate time, the PDK may awake just prior to where it believes the next superframe is that it should communicate on, and will listen for the beacon and begin responding with the PDK location response message.

As shown in FIG. **23**, a CRDC may update its system information on each superframe and output a c-beacon with current information to all PDKs and RDCs. The PDK then waits for its predefined superframe and timeslot and responds. This scenario continues to occur until the PDK leaves the CRDC cell or an RDC responds to the PDK.

As described above, a CRDC may continue to output a c-beacon, and the PDK periodically awakes to re-align to the superframe and respond to the c-beacon. If a RDC is present and wants to communicate with the PDK, the RDC may respond on the even timeslot immediately available after the PDK's transmission. FIG. **24** shows how the communications handshake between the PDK and RDC may occur. Particularly, FIG. **24** depicts one CRDC, one RDC with two active channels (i.e., using two wireless links), and a PDK.

With continued reference to FIG. **24**, the CRDC outputs a c-beacon of which the RDC and PDK are aligned. The PDK realizes that the c-beacon's superframe count correlates to its internal predefined active superframe count, and then waits for the appropriate timeslot to respond to the system with its PDK location response. When the PDK responds on the c-beacon channel, the RDC detects the response and determines that it wants to associate with the PDK. The RDC then creates a message including its own RDC ID, the PDK's ID, a command to switch to channel **2**, and a predicted superframe and timeslot the PDK should respond on. The PDK, in response, switches to channel **2** and waits for the appropriate superframe and timeslot count and transmits a link request along with its PDK ID and the destination RDC ID. The destination RDC then receives the information and responds back to the PDK with a link grant. Communications may now begin between the two devices exchanging the appropriate information to maintain the PDK-RDC link. To maintain synchronization, the RDC may define the periodic communication frequency with the PDK and will periodically generate a request to the PDK to exchange information. The PDK may then reconfigure its wake parameters to that of the RDC, as the RDC is maintaining superframe synchronization.

It is noted that in one or more embodiments, such as that described immediately above, the RDC may have a dual physical interface, maintaining synchronization with the CRDC on channel **1**, while associating with one or more PDKs on channel **2**. The physical interface connected to channel **1** provides timing to the physical interface on channel **2**.

Further, because the RDC may have intelligence on both channels, the RDC may provide coordination of PDKs that it wants to redirect to channel **2** and PDKs that are on channel **2**. More specifically, the RDC may move the superframe and

timeslot that a PDK communicates to the RDC on, if another PDK with the same timeslot requirements is present on channel **1** and the RDC wants to associate with it.

CRDC Slot and Channel Coordination

In one or more embodiments, a CRDC may be configured via a remote connection to a server or automatically. Using remote configuration, the server may have knowledge of RDCs located within the CRDC cell boundary and may perform optimum channel and timeslot planning.

When the CRDC is configured automatically, the CRDC may scan all channels and find the channel with the least interference. The CRDC may then begin transmitting a c-beacon.

All RDCs located within a CRDC cell boundary may place the CRDC into its local CRDC database and complete scanning all other channels to determine if other CRDCs are present. In the case multiple CRDCs are found, the RDC may communicate to each CRDC its findings if possible.

Each CRDC may coordinate through that RDC to setup channels and timeslots to prevent interference between CRDCs. In one or more cases, the CRDC may select another channel and disregard the timeslot information because CRDCs may not be required to be timing coordinated. Further, it is noted that any RDC that detects more than one CRDC may select the CRDC with the best signal quality.

Protocol Operation

The following describes a protocol operation in a single cell coordinated system using a CRDC configuration. In one or more embodiments, there may be additional protocol fields required to allow interoperability between single cell and coordinated multi-cell configurations. Such additional protocol fields may provide information to RDCs and PDKs that are located in near proximity to each other, or within a CRDC cell.

A network format field may provide information to RDCs and PDKs related to the specific configuration the single cell or coordinated cells are operating in.

Name	Type	Valid Range	Description
Proxense_NWK_FMT			Defines the network configuration employed for an RDC or CRDC
Network Type	Integer	0 to 7	Defines the network type employed. 0 = Single Cell 1 = Multi-Cell coordinated 2 = Multi-Cell coordinated w/CRDC 3–7 = RFU
Beacon Source	Binary	0 or 1	Defines the source of the beacon. 0 = RDC 1 = CRDC
Broadcast Flag	Binary	0 or 1	Defines if this is a broadcast message. 0 = not broadcast 1 = broadcast
Timeslot Select	Integer	0 to 3	Defines how an RDC and PDK ® utilize timeslots in a system. 0 = no timeslots assigned 1 = 802.15.4 Beacon enabled 2 = PDK ® uses even timeslots/ RDC uses odd timeslots 3 = PDK ® uses odd timeslots/ RDC uses even timeslots

-continued

A network type value may be used to define a cell network configuration. An RDC receiving this field may determine its operating mode based on this field. If an RDC receives a network type of single cell from another transmitting RDC, the RDC may tune to another channel to avoid collisions with the other RDC. If the RDC receives a network type of coordinated multi-cell, the RDC may join the multi-cell coordinated system. If the RDC receives a network type of coordinated multi-cell with CRDC, the RDC may join the CRDC network if the site ID is the same.

The PDK may also receive this information and adjust its operating mode to comply with the system employed. If the PDK detects the system to be single cell, the PDK may conform to more of an IEEE 802.15.4 protocol, communicating with the RDC in such a manner. The PDK may be aware that it is required to communicate with a specific RDC ID. The PDK may still have the capability to periodically monitor other channels for other RDCs in the local vicinity.

If a PDK detects the system is multi-cell coordinated, the PDK may receive further information indicating the other RDC frequencies in use in the coordinated network and may adjust its system operating parameters appropriately.

If the PDK determines the system is multi-cell CRDC coordinated, the PDK may adjust its operating parameters appropriately. The PDK may acknowledge that a c-beacon is present and may broadcast a PDK location response. The PDK may also understand that an RDC with a different ID other than a CRDC ID may attempt to communication with the PDK.

A "beacon source" field may indicate to all RDCs and PDKs in the general proximity of the type of beacon being generated. This information may be helpful, specifically when in a multi-cell CRDC system, and allows RDCs to distinguish between RDC generated beacons and CRDC generated beacons.

A "broadcast flag" may indicate to all recipients that the information being sent is intentionally being broadcast to all devices that can receive particular protocol information. In some cases, a message that may be sent to a specific PDK may also be broadcast to all PDKs. This flag assists the PDKs in determining how to treat the information.

A timeslot select field may indicate to PDKs and RDCs how the timeslots are configured in the system. This field may further be used to determine if an RDC and PDK are to use even-based or odd-based timeslots for responding.

In order for an RDC or PDK to determine that a network is of a particular type, a network identifier may be used.

Name	Type	Valid Range	Description
Proxense Network Identifier	ASCII	Proxense	An 8 byte ASCII value identifying the network to be a Proxense network

Single Cell Standalone Operation

The following description is based on, for example, an electronic game (such as one that may be found in a casino) operating in a single cell configuration and attached to some central server. However, it is noted that as described above, examples of applications and uses are for purposes of illustration and clarity and do not limit the present invention.

The game has a resident RDC integrated into its hardware and has a system stack that allows access to the game. The RDC may be attached to the game controller, or may use a separate controller containing the system stack and an interface to the central server.

For clarity, any interactions between the RDC and the server will assume that the reader understands that the system stack and server interface application are taken into account in the transactions described.

This description covers the basic initialization of the system and RDC/PDK interactions that occur while associated in the system. The following concept defines how, for example, a casino game in a single cell configuration may be setup with multiple player PDKs. Upon power being applied to the game and RDC, the internal circuits perform an initialization function and the operating system and game load. The game and RDC indicate to the central server that power has been applied. The system stack also loads in the controller and the RDC device is started in a static mode with its transceiver disabled. The RDC may first be configured to operate in a single cell environment and requires some basic setup requirements as will be understood by those skilled in the art.

The server places the game into a particular configuration mode where it can set the RDC for auto-discover mode, or may choose to manually configure parameters related to the RDC's operation. If the server places the RDC into auto-discovery mode, the RDC generates a random value for its RDC ID and its password, which is then passed back to the server.

If the server chooses to manually setup the RDC, the server may supply the RDC ID and password. The server may also send the network topology and preferred channels the RDC will operate on. The central server may then send its site information to the game controller, which is also used by the RDC to allow access to the game. Once the server has configured the RDC, the server will enable the RDC and game.

The configuration information shown in the table immediately below may be used for RDC provisioning.

Site ID	0x0100	Generic value for a single cell RDC.
RDC ID	0x1234	Arbitrary value
C-Superframe Length	32	2.5 second superframe period for PDK ® wakeup
Superframe Length	16	16 slots per superframe
Proxense Network Identifier	Proxense	Defines system as a Proxense system
Proxense Network Format		
Network Type	0	Single Cell
Beacon Source	0	RDC
Broadcast Flag	1	Broadcast
Timeslot Select	1	802.15.4 timeslots

In this configuration of a standalone RDC (without a site identifier): the site ID is set to **0** because this is a single cell RDC and no site information is required; the RDC ID is arbitrarily selected; the c-superframe length is set to 32 superframes indicating to the PDK that it needs to wake up once every 32 superframes in superframe **0** to exchange information with the RDC to remain associated; the superframe length is set to 16, which may be the standard value for a superframe in a particular system; the network identifier allowing a PDK to understand the beacon is from an enabled RDC; and the network format indicates one or more of several parameters (e.g., the network type indicates to the PDK that it is a single cell network—indicating to the PDK no other RDC is associated with this RDC and therefore no other RDC should be attempting access on this channel, the beacon source indicates to the PDK that the beacon is from an RDC and not a CRDC device, the broadcast flag indicates to the PDK that the message is being broadcast from the RDC, the timeslot select field indicates that a PDK should use IEEE 802.15.4 beacon-based handshaking with the RDC). The RDC then scans all channels (or preconfigured channels) to determine if any other IEEE 802.15.4 or client devices are present or if any other interference is found.

With the pre-configured information, the RDC then begins beacon transmission on the least interfered channel with a c-superframe count, superframe count, and the information located in the table immediately described above.

Now, as shown in FIG. **25**, in standalone mode, the RDC will continue to transmit beacons on every superframe. The information in the table immediately described above may be transmitted along with the superframe count in every superframe to allow the PDK to configure and synchronize with the system. When the superframe count is the superframe length minus one, the superframe count will start counting from **0** for the next c-superframe.

At the end of each beacon transmission, a frame check sequence (FCS) may be appended as part of the IEEE 802.15.4 physical layer. The FCS provides protection for the data carried in the frame. Because the beacon may not occupy the entire frame (or timeslot), hashed lines are shown indicating additional idle time between the FCS and IFS. The RDC maintains the beacon transmission until the RDC is disabled or power is removed. At this point in the sequence of operations, there are no PDKs registered with the RDC, so no PDK can gain access without registering and receiving authorization from the RDC.

Again referring to the casino game example described above, a player with a PDK that has not yet been registered to the property enters the RDC cell. The PDK is in battery save mode and periodically wakes up looking for a network. As shown in FIG. **26**, the PDK starts in a deep sleep state. The wakeup timer eventually expires, causing the PDK to enable and tune its receiver. The PDK then monitors the channel that it tuned to for a period of one 17 timeslots (one superframe plus one slot), or approximately 83 milliseconds. The 17 timeslot limit is based on a superframe of 16 timeslots, and the fact that the PDK, upon initial reception, could miss the beginning of a beacon. The additional slot provides the overlap necessary to guarantee reception of a beacon if one is present.

If no beacon is detected, the channel number is incremented (modulo **16**) and the PDK resets its wakeup timer and returns to deep sleep mode. If a beacon is detected, the PDK checks for a network ID and if one is not found, it again increments the channel number, resets its wakeup timer, and returns to deep sleep mode. If the network ID is detected, the PDK attempts to establish a communications link with the RDC. At this point, the PDK has found a single cell network on channel **1** with an RDC ID of 0x1234, and the RDC is in broadcast mode indicating that it is attempting to gain the attention of any PDKs in the local proximity.

Now referring to FIG. **27**, in which an authorization denial handshake is shown, the RDC broadcasts its beacon with the information as described above. The PDK detects the beacon in broadcast mode, determines the network configuration and RDC ID and returns a PDK location response with the RDC ID and PDK ID included. The RDC detects the response from the PDK and alerts the central server that a PDK with a public ID of 0x9876 (arbitrary) wants to attach and enable the game for play. In the meantime, the RDC may immediately respond back to the PDK indicating that the PDK should wait for authorization. This keeps the PDK responding to beacons as defined by the fields located in the beacon until the beacon is no longer present (i.e., the PDK is no longer in the RDC cell), or until a response is returned by the RDC.

The central sever, in conjunction with the system stack, may then choose to not recognize a particular PDK's public ID that has not yet been registered to the property. The RDC continues to output its beacon. Upon the next wakeup and PDK location response from the PDK, the RDC detects the PDK ID and, within its database, looks up the authorization parameters for this PDK. It determines that authorization has been denied and sends an "authorization deny" command to the PDK. In the case that a particular PDK is not recognized or not authorized, a notification may sent to a staff member of the property to register a user of the PDK, and/or, in one or more embodiments, one or more machines may be used to prompt the user to register with the property.

The PDK temporarily stores the RDC ID in its local memory with a flag indicating that it shall no longer respond to this RDC ID. The PDK may then go back into battery save mode and periodically scans all channels as previously described above with reference to FIG. **26**.

Still referring to FIG. **27**, because the PDK may not constantly be aware of its geographical location, the PDK may continue to monitor each channel and decode each beacon. Eventually, the PDK returns to the channel that the RDC is still transmitting beacons on, decodes the beacon information including the RDC ID, and determines that it is not to respond.

Further, the PDK may maintain the RDC ID in its local database until the beacon is no longer present during scanning, at which time the RDC ID is removed from the database. The period of time that the beacon is absent before removing the RDC ID from the database may be determined during prior system testing.

Assuming the RDC beacon is absent for a given period of time indicates to the PDK that the PDK has left the RDC cell. Upon the next detection of that RDC beacon, the PDK may again attempt to gain access to the RDC as shown in FIG. **27**. The difference this time is the PDK ID is in the RDC's local database and the RDC may deny authorization without alerting the host system. The PDK may then operate as previously described after authorization has been denied.

In one or more embodiments, once a host system grants authorization for the PDK to operate within the property, then one or more different scenarios may exist. In one scenario, the RDC may transmit the PDK ID as part of the beacon transmission, alerting the PDK that the RDC wants to communicate, and the PDK may then respond with a PDK location response. In another scenario, the PDK returns to the RDC cell, and after detection of the beacon (with or without the PDK ID), it returns the PDK location response. In either case, after the RDC detects the PDK location response with the PDK's public ID, the RDC then issues a link request attempting to initiate a link between the RDC and PDK. FIG. **28**, for example, shows a handshake between the RDC and PDK for a PDK authorization grant.

As shown in FIG. **28**, the RDC may broadcast the beacon on every superframe. Although not shown, the superframe counter value is also included, which the PDK may use for battery conservation. The beacon may be broadcast in one of more different methods. The system may have just authorized a PDK and the beacon includes the PDK's public ID for a period of time or, in another method, the beacon may be transmitted without the PDK's public ID. As described above, if the PDK is in the RDC cell and has deactivated its response, when the PDK detects its ID in the beacon, it may reactivate its response to the RDC and transmit both the RDC ID and PDK public ID in its PDK location response.

If the PDK has just re-entered the RDC cell and detects the RDC beacon (with or without the PDK's public ID), the PDK may again respond with the RDC ID and its own PDK public ID. The RDC may then detect its RDC ID and the PDK public ID and immediately sends a link request to the PDK with both its RDC ID and the PDK's public ID indicating it wants to initiate a link with the PDK. The PDK may detect the request and respond with a link grant with both IDs included. The RDC and PDK may enter into association mode and then provide data exchange on a periodic basis insuring the PDK remains in range of the RDC. This periodic data exchange may occur based on parameters previously described above. Interleaved between the data exchange may be beacons that other PDKs may use to access the RDC. Eventually, the RDC may terminate the data exchange based on inactivity, as determined by the server, or as based on the PDK leaving the RDC cell, in which case the RDC realizes the PDK is no longer in range.

Further, it is noted that due to radio interference issues that might occur in wireless systems, the RDC and PDK may not relinquish the link based on the lack of a single data exchange. Because the RDC is not necessarily battery limited, the RDC may continue to monitor all timeslots in a superframe with the exception of those frames it transmits on. In contrast, it is noted that a PDK is likely battery limited and therefore may need to intelligently choose when to receive and transmit.

In the case the RDC and PDK lose communications during the predefined period they are attempting to communicate, both devices may have equal knowledge of such an event. Because the PDK is battery limited, the PDK may try on the next available timeslot to regain synchronization with the RDC. After a period of time in the RDC, or a predefined number of attempts by the PDK, the link may be considered lost.

Referring again to the casino game example, in one or more embodiments, an enabled single cell game facilitates multi-player access via the central server. Individual players may consecutively play the game provided they have the appropriate PDK, or in some instances, multiple players may be able to simultaneously play the game. The RDC allows for simultaneous multi-player access, so long as the central server supports and authorizes such play.

In the case where multiple PDKs may simultaneously access an RDC, the RDC may provide superframe coordination information to the PDKs to interleave them in a manner to avoid contention between RDC and PDK communications. For example, as shown in FIG. **29**, the RDC may assign a superframe and timeslot count to each PDK accessing the RDC. Through link setup and data exchange, the RDC may direct the PDK to use a specific superframe and timeslot (or multiple superframes and timeslots) for periodic data exchange. By using such a technique, the RDC may alter the wakeup superframe for each PDK and may efficiently distribute them so as to reduce contention between the PDKs. Because the PDKs are given a specific superframe and

timeslot (or superframes and timeslots), the PDK is required to wake up during that superframe(s) and timeslot(s) to communicate with the RDC. This technique, in turn, may greatly extend PDK battery life.

Now referring to FIG. **30**, it shows a configuration in which multiple games operating as single cell RDCs are co-located in close proximity with overlapping RDC cell coverage. In such a configuration, each RDC **200**, **202** may not be aware of the presence of the other RDC **200**, **202** but a PDK **204** that resides in the area of overlapping coverage may detect the presence of both RDCs **200**, **202**. A technique of restricting or allowing PDK access to one or more of the RDCs **200**, **202**, and the technique of enabling game play may depend on the system stack for that specific configuration.

In a configuration where multiple RDCs are co-located without the knowledge of each other, and where a PDK is registered to both RDCs, a technique of determining and gaining access to each RDC may be enforced. There are one or more possible scenarios that may occur. For example, in one case, a player may desire simultaneous access to a game and another device, such as a drink or food purchase device, with both being physically located near each other and without disrupting the game play. In another case, a player may be registered to multiple RDCs, but wants to associate with one RDC at any given time.

In addition to an RDC granting permission to the PDK for access, the RDC may also dictate to the PDK the number of simultaneous associations allowed. The purpose of defining the number of associations permitted may reduce the possibilities that the PDK can simultaneously associate with and enable two or more RDCs within close proximity of each other. This may prevent unauthorized use of a player's PDK on adjacent enabled devices, thereby disallowing a player from using another player's identity. The capability of configuring the number of associations for a particular RDC may be implemented in a system stack and controlled by the attached controller's application.

Referring again to the case where a player desires simultaneous access to a game and another device, a PDK may be capable of associating to multiple RDCs based on the physical limitation of the maximum number of simultaneous connections the PDK can handle and based on the number of associations the RDC permits.

Further, it is noted that under the conditions the PDK is associated with more than one RDC, the PDK may relay information back to each RDC indicating its timing relative to the other RDC. This information may be important in the event a single PDK is associated with more than one RDC because the clock frequency error between the RDCs may cause eventual timing drift that will eventually cause timeslot and superframe overlap and prevent the PDK from communicating with both units on a periodic basis. This situation is also noted: where two PDKs are associated with the same RDC and each PDK is also associated with a different second RDC. Additionally, each of the second RDCs may also have other PDKs associated with them that are also associated with even different RDCs. Eventually, such an uncoordinated system may appearing like a mesh network. A system of such complexity may require a CRDC to be used to address synchronization issues.

As to the case where a player may be registered to multiple RDCs, but wants to associate with one RDC at any given time, there may one or more techniques that may be employed to control how a PDK associates with a specific RDC. In one way, a PDK is associated with a single RDC. Using this technique, the PDK may attempt to associate to other RDCs, but the other RDCs will deny association through the back-end central server, causing the PDK to ignore the other RDCs as previously described above. It is noted that such a technique may eliminate a cell size issue, where the cell must be constrained to prevent other RDCs the PDK is registered to from accessing the PDK.

In another technique for directing a PDK to communicate to one RDC in a configuration where multiple RDCs exist of which the PDK is registered to, by significantly reducing the RF power level from the RDC and providing this information along with a request for the PDK to reduce its RF power, a close proximity communications channel may be created. The close proximity communications channel may then operate as if a single cell network exists. More particularly, if the RDC is configured to have a reduced RF power output, the RDC's cell boundary shrinks causing the PDK to have to be within closer proximity of the RDC to receive a beacon from that RDC. If, in turn, the RDC indicates in the beacon that it is at reduced RF power, the PDK is aware that the RDC is in extremely close proximity. In addition, if the beacon includes a command to instruct the PDK to reduce RF power, the chance of surrounding RDCs receiving a response or interference from the PDK may be minimized. When the communications channel is terminated and the PDK no longer sees the beacon from that RDC, the PDK may readjust its RF power level to normal levels for a larger cell coverage area. Such dynamic RF power level adjustment may be implemented in the system stack.

Thus, in one or more embodiments, there exists a scheme to dynamically adjust a transmission power and/or reception sensitivity of a wireless reader device along with an ability to command a client device to do likewise to permit both cell coverage and client device response area programmability. This may enable the dynamic tracking of transient client devices within and through the cell's extended or default coverage area with full power and sensitivity at both ends, while concurrently allowing the association of a particular client device in close proximity to the reader device for command and control of an application or service during a session. Those skilled in the art will note that by dynamically varying a size of a cell in which a secure transaction takes place between a PDK and an RDC (or in which a PDK accesses an application via an RDC), at least some level of security may be achieved in that eavesdropping may be prevented. Moreover, unnecessary and potentially unsafe propagation of a wireless signals beyond a certain distance may be avoided.

For example, a plurality of PDKs may be located in a default wireless coverage range of an RDC. This default wireless coverage range may represent a cell of the RDC at full power. As the plurality of PDKs enter and exit the RDC's cell, the RDC reports corresponding location tracking information back to, for example, a central server. When one of the PDKs requests access to an application secured by the RDC, the RDC may follow by reducing its RF power and commanding the requesting PDK to also lower its RF power, thereby in effect requiring that the requesting PDK be "drawn in" to the RDC in order for the PDK to access the application. It is noted that while the RDC may communicate with the requesting PDK via low power RF signals, the RDC may continue to maintain its default wireless coverage range for tracking other PDKs. When the requesting PDK is moved away from the RDC or the session is otherwise terminated, both ends return to their default full RF power settings.

As described above, reception sensitivity of the RDC and/or PDK may be changed as part of a cell size variation technique in accordance with one or more embodiments. Reception sensitivity may be adjusted using an RF attenuator (e.g.,

a step, variable, or programmable RF attenuator) that is either specific to a receive path or common to both receive and transmit paths. It is noted that even if the attenuator is common to both receive and transmit paths, transmit power may be independently controlled. Further, in one or more embodiments, a separate attenuator may be used to allow for independent control of transmission power and reception sensitivity.

To determine how much to adjust the size of a wireless cell without severing a wireless connection between an RDC and a PDK, one or more of various metrics may be used. For example, in one or more embodiments, a signal strength of the PDK may be monitored to determine by how much to power down a transmission power of the RDC and/or the PDK. If the signal strength is determined to be relatively strong, then the RDC may cause a reduction in transmission power that is greater than if the signal strength were detected as being weak. Conversely, if the signal strength is detected as being weak, the RDC may lower transmission power by a small amount or not at all. Instead of or in addition to relying on signal strength, a bit error rate may be assessed to determine by how much to power down the transmission power. For example, if the bit error rate of communications between the RDC and PDK is determined to be low, then the RDC may lower transmission power by an amount greater than if the bit error rate was determined to be relatively high.

Further, as described above, the transmission power and/or reception sensitivity of either or both of an RDC and a PDK may be adjusted. In one or more embodiments, only a transmission power of the PDK may be adjusted. This may done to, for example, "bring in" the PDK and reduce the likelihood of that PDK interfering with other RDCs. In one or more other embodiments, the transmission power of both the RDC and the PDK may be adjusted in an effort to draw in the PDK to the RDC. In still one or more other embodiments, in addition to or instead of adjusting transmission power, reception sensitivity of either or both of the RDC and the PDK may be changed.

Moreover, in one or more embodiments, an RDC may have multiple wireless transceivers, whereby at least one of the transceivers is at full power for PDK location tracking purposes, while one or more of the other transceivers are used to establish adjustable wireless cells for particular associations with PDKs. For example, in the case of an ATM machine having an RDC, the RDC may carry out a secure transaction with a PDK in an adjusted wireless cell, while at the same time, casting a broader wireless cell to monitor and identify one or more PDKs around the transacting PDK. In such a manner, for example, a security measure may be implemented by which the RDC can identify individuals behind a transacting user. Further, as an added or alternative security measure, transmission power may be adjusted dependent on a sensitivity of the type of data requested to be exchanged in a particular transaction. Such data sensitive transactions may be conducted at low power with additional security measures such as password entry or biometric input.

Application Utilizing Multi-Cell Coordination

The following describes a system architecture and operation of a system within, for example, a casino application. Referring to FIG. **31**, a CRDC (not shown) and multiple RDCs (shown, but not individually labeled) are distributed throughout a casino floor. In such embodiments, a single CRDC generates a cell **210** that provides ubiquitous coverage of the entire floor. On the left side of FIG. **31**, multiple RDCs (shown, but not labeled) provide overlapping cell coverage and blanket the casino floor and gaming table area **212** all the way to an entrance of the casino with continuous wireless service coverage. These RDCs may be dedicated to PDK location tracking, allowing the casino operator to know where a player carrying his/her PDK is geographically located on the floor. These RDCs may be mounted in the floor or ceiling, creating, for example, relatively symmetrical cells.

Another set of RDC cells (shown, but not labeled) are shown to exist in the right side of FIG. **31** and are integrated in gaming machines (shown, but not labeled) within an electronic gaming area **214**. The cell orientation for these RDCs is more oblong and focused at players that are within close proximity and in front of the electronic gaming machines, noting that cell orientation and shape may be set according to antenna position and/or configuration. The cells extend outward towards the center of the isle to detect the presence of a player that may be walking by. Toward the lower right part of FIG. **31** is a registration cell **216** that sits at a registration desk (shown, but not labeled) where a player may register and acquire a PDK the first time the player enters the casino. The registration cell **216** may be smaller in size to enable local communications between the RDC and PDK without allowing external RF monitoring devices to capture and record the interaction between the devices.

It is noted that in FIG. **31**, a PDK **218** that is currently out of the range of all RDCs, but still in range of the CRDC. This represents a PDK carried by a player, which is being used to track the player's position and provide additional services. Such services are further described below.

Further, still referring to FIG. **31**, there is a central server **220**. The central server **220** may contain a player's financial information (credit card numbers, gambling limits, and other information related to a player). In addition, the central server **220** may be physically wired (not shown) to all RDCs and/or CRDCs located throughout the casino.

Although not shown in FIG. **31**, within the PDK location tracking system, RDCs may be gambling tables that also have RDCs embedded within the table itself. A representative gambling table is shown in FIG. **32**.

As shown in FIG. **32**, a gambling table **230** has RDCs **232**, **234**, **236**, **238**, **240**, **242**, **244**, **246** embedded within it. RDC **246** may be a dealer RDC that has a cell geometry covering the dealer's area, allowing the dealer to freely move around in this area. There are an additional RDCs **232**, **234**, **236**, **238**, **240**, **242**, **244** that are located at each player position. Each of these RDC cell's coverage areas are oblong and are directed to where the player would be sitting/standing. It is noted that each player position's RDC **232**, **234**, **236**, **238**, **240**, **242**, **244** allows for some coverage of the region directly behind each player position, allowing the RDC **232**, **234**, **236**, **238**, **240**, **242**, **244** to report back through the system the presence and identity of anyone behind the player. The RDC cell's coverage areas may be minimized to cover the area where a dealer or player may be located relative to the table. Those skilled in the art will note that the actual cell footprints may vary from those shown in FIG. **32**. Utilizing distributed RDCs with directional, highly attenuated, antennas allows the casino operator to know the location of both dealers and players, and the amount of time they remained at the table.

The CRDC, PDK location tracking RDCs, and gambling table RDCs, may interoperate in a system such as that shown in FIG. **33**. FIG. **33** shows a graphical representation of the sequence of events that may occur when a c-beacon is transmitted in, for example, a casino application. As shown in FIG. **33**, first, a CRDC **250** transmits the c-beacon to all RDCs and PDKs (shown, but not labeled) within the CRDC's cell radius. All of the RDCs and PDKs setup and synchronize their timing to the beacon. Next, each PDK, in its appropriate timeslot, transmits a PDK location response ID. Any RDC that is in the vicinity of the PDK's response receives the PDK

location response ID and logs specific information related to the reception. Then, each RDC packetizes the information received from the PDK and, through a wired back channel, relays the information to a central server **252**. The central server **252** may then utilize this information to indicate to an operator, by either graphical or text format, the geographic location of each player.

Representing the flow in a different manner, the interactions for a single PDK is shown in FIG. **34**. In addition to providing location tracking information, when the PDK outputs a PDK location response ID, certain events may occur from an RDC based device. In the event the RDC based device is an electronic game, via the central server, the electronic game may entice the player over to it by flashing information on the screen related to that specific player. In one example, an electronic gaming machine may offer the player a free game, gaining the player's attention and ultimately enticing the player to play the game. In order to identify the player, further steps may be taken between the PDK and the RDC that are described below.

In the event the RDC device is used for location tracking, it may perform further interrogation of the PDK to determine whether the PDK is legitimate. A more detailed description of such interrogation is provided below.

Now referring to FIG. **35**, it shows two CRDCs with overlapping cell coverage, but not to the point where each CRDC can see the other CRDC. As shown in FIG. **35**, the CRDC cells are non-uniform in nature due to obstructions blocking the transmit radio path. The CRDC cell overlap may cause a number of RDCs to be in each CRDC cell. It is envisioned that other CRDCs may overlap in the same region if they are placed above and below the RDC micro-cellular structure. In this case, for example, up to 4 channels may be occupied just for CRDC beacon transmission.

Due to the possibility of interferers in the coverage area of the CRDC, the central server may manually configure the CRDC, or the central server may also instead or additionally have the capability to auto-configure. In the case the central server performs manual configuration, upon initial installation, power up, and provisioning, the CRDC is configured to remain in a dormant state until the central server interacts with the device and instructs it to perform specific tasks. The central server may first instruct the CRDC to enable the receiver, scan all channels, and report back the findings of each channel. When the CRDC scans each channel, it collects signal quality metrics and any IEEE 802.15.4 radio transmissions. The operator of the central server may then analyze all of the signal quality metric information and any IEEE 802.15.4 framing information to determine the best channel the CRDC should transmit its beacon on. Once determined, the operator at the central server may command the CRDC to store the specific channel that it will transmit on and enable it to begin transmitting. The operator may then select the next CRDC and perform the same operations, until all CRDCs have been configured in the network.

In an automatic configuration mode, the CRDC scans each channel and collects signal quality metrics and determines if other IEEE 802.15.4 devices (including another CRDC) are present. The CRDC may then select the quietest channel to begin its beacon transmission on. Further, it is noted that it may be recommend that initial auto-configuration of a CRDC occur when there is a single CRDC present. This recommendation is based on the fact that the CRDC may have overlapping coverage with another CRDC as shown in FIG. **35**, but the CRDC is not aware of the overlap, causing two CRDCs to transmit their beacons on the same channel. Eventually, due to potential timing inaccuracies in the CRDCs, they may overlap and become direct interferers to RDCs and PDKs in the overlapping area. An exception to this recommendation is when the system is configured to allow the CRDC to report back the channel that it occupies (or intends to occupy) to the central server, and the server can then analyze the CRDC channel lineup on all CRDCs and reassign a channel for any given CRDC.

Once a channel has been assigned and stored in a local non-volatile memory of the CRDC, upon next power up, the CRDC scans all channels again and return to their last assigned channel provided that it is not occupied by an interferer or by another CRDC beacon. In such a case, the CRDC may have to again go through the initialization process.

Although a synchronized system may lead to higher throughput and may possibly lead to better battery life, in one or more embodiments, it may not be necessary for CRDCs to be synchronized. Because each CRDC operates on a separate channel, there may be no timing-specific consideration that needs to be addressed between CRDCs. Instead, a concern may relate to how the PDK aligns to multiple unsynchronized CRDCs. From a PDK location-tracking standpoint, the PDK may be required to lock to a single CRDC beacon. The CRDC beacon will indicate to PDKs what other channels a CRDC may be located on. The PDK may not need to attempt receiving from any other CRDC, provided the signal quality metrics for the current CRDC it is monitoring has sufficient signal quality to receive error free data. In the case the signal quality degrades, the PDK may then periodically switch to other channel(s) to determine if a better signal quality can be obtained. If a better signal quality is determined to be on an alternate channel, the PDK may then immediately switch to the alternate channel, provided it is not in association with an RDC at that instance in time. If the PDK has begun association to an RDC, the PDK may have to attempt to finish the association before switching to the alternate channel. It is noted that once a PDK is in association with a RDC, the PDK is no longer required to monitor the CRDC beacon, until the association ends between the devices by releasing the link or by the PDK leaving the RDC cell.

When an RDC is powered up for the first time, the RDC may not be aware of the network it belongs to or its configuration within the network. The RDC may default to a single cell configuration. For this reason, RDCs placed in a CRDC cell configuration may by default remain in a dormant state upon its first initial power up in the network. This may allow the central server to configure any specific information related to the network into the RDC prior to operation. Some of this information may include, for example, the site ID, a local RDC ID, and other parameters related to the wireless transmission protocol. The site ID is important, because the property owner may not want their RDCs to become associated with another property; thus, the RDC should synchronize to beacons transmitted with that site's ID. The RDC ID is used in communication between a PDK and RDC; hence, there should be one RDC ID per RDC device in the network. Other application-dependent parameters may include how the unit operates when associated with a PDK and whether the RDC sends data back to the server when data is ready, or if the server must poll the RDC for the information. The central server may then command the RDC to enable its receiver and scan all channels to determine the signal quality of each channel and which CRDCs may be received by the RDC. The operator of the central server may allow the RDC to automatically select which CRDC Beacon to lock to, or can command the RDC to select a specific CRDC beacon. After reviewing the channel list for signal quality, the system may then command which channels the RDC can use for alternate channels

for RDC-PDK communications, or the system may command the RDC to automatically select the alternate channels. The system may then place the RDC in operation mode, and the RDC then tunes to the selected CRDC beacon channel and remains there listening for CRDC beacons and any PDK that sends a PDK location response ID. While receiving the c-beacon, the RDC may configure its timeslot information similar to that described above. This defines the superframe structure as well as defining which timeslots (odd or even) the RDC is permitted to communicate with a PDK on the beacon channel.

In the background, on the alternate wireless link described above with reference to FIG. **9**, the RDC may continue to scan the alternate channels, updating its list of clear channels. This updated list may then be used when a RDC determines it wants to extend its communication with a PDK in association mode and selects which channel that communication will occur on. The RDC, in operational mode, may perform frame and slot alignment to the CRDC and listen for a PDK location tracking response. On a periodic basis, the RDC may send information back to the central server indicating that it is still operational and indicating the status of the communications channels (e.g., CRDC beacon, alternate channels).

In one or more embodiments, a registration RDC may be used to initially enable and to configure a PDK. The registration RDC may have a small cell coverage area by design, measured, for example, in inches. This may require that the unregistered PDK must be in extremely close proximity, e.g., placed on the registration RDC housing, to communicate with the registration RDC, reducing the likelihood of RF eavesdroppers gaining access to PDK setup information.

The registration RDC may be directly connected to a central server. In addition to specific security features, the registration RDC installs and configures service provider information located on the central server (described above with reference to FIGS. **6** and **7**). Such information may include the service provider ID, secret key, and other parameters that the service provider wants to designate for access within their network. These other parameters may vary in size in the PDK and may be defined by the host system to meet the needs of the property. Information transferred to a PDK may include, for example, the service provider site ID, the service provider's assigned PDK ID, the service provider's secret service ID, the service provider's secret key, and service provider specific access information.

Now describing an example of an operation in accordance with one or more embodiments, once a system has been installed and properly provisioned, a rated player may walk into the casino. They are greeted by a host and walked over to the registration desk, where the player's information, already in the central server, is linked to a PDK that is given to the player and assigned with specific privileges. The player places the PDK in their pocket and begins to walk throughout the casino. Once the PDK leaves the registration cell, the PDK enters discovery mode and scans the channels for a c-Beacon. If the PDK does not locate the c-beacon, it continues to scan for an undetermined period of time until it either goes into battery save mode or finds a c-beacon.

Once the PDK finds a c-Beacon, the PDK determines if the c-beacon is a particular type of network and the site ID is in its local service provider database. If the site ID is not in the database, the PDK ignores that c-beacon and keeps looking for other c-beacons on other channels until one is found that is in its local database. Once a valid c-beacon containing a site ID that is in the PDK's local database is found, the PDK extracts the CRDC channel availability flags and checks the other channels in the CRDC channel availability list. The PDK then determines which CRDC has the best signal quality metrics. The PDK switches to that channel and begins receiving c-beacons. The PDK extracts the CRDC and network configuration information as described above. This information may define the framing structure and how the PDK should operate within the network. The PDK then applies the c-beacon parameters to its radio transceiver parameters, configuring the sleep interval and response superframe and timeslot information. Because the PDK has just received a c-beacon, the PDK is now aware of the current superframe count. The PDK then configures its timer to wake up just prior to the expected superframe count that it may communicate on.

Now also referring to FIG. **36**, when the sleep timer expires, the PDK may wake up, listen for a specific c-beacon, and verify the superframe count. It then waits a predetermined period of time for its slot to be available and performs CSMA-CA, and if no other device is attempting to respond, it responds with its PDK location tracking response. If another device was detected on the channel, the PDK may then reset its timers and wait for the next predefined superframe and timeslot to wake up and attempt again.

It is noted that a PDK in accordance with one or more embodiments may be powered by an internal battery of, for example, a type commonly used to power small electronic devices such as watches, calculators, and mobile computing devices. The power of such a client device battery is consumed when the PDK is active. In an effort to reduce and/or minimize battery consumption, in one or more embodiments, the active time of a PDK as a percentage of total time may be reduced by management of transmission and reception times. For example, as described above, a network in accordance with one or more embodiments may be designed to configure time slots (e.g., frames), groups of time slots (e.g., superframes), and/or coordinating beacon superframes (e.g., c-superframes) in a manner such that a client device is caused to both listen and respond within specific time slots. Because these time slots are configured by the network, they may be precisely predicted, thereby allowing the client device to set a timer, return to sleep mode, and waken when a specific, time-slotted interaction is expected or required of the client device. Further, in one or more embodiments, because a network in accordance with one or more embodiments may implement programmable c-superframe lengths, an operator or system may individually tailor performance to maximize (or at least improve) battery life and/or minimize (or at least reduce) system inter-message latency without requiring access of the client device itself or physical alteration of the client device.

When the PDK responds with a PDK location tracking response, every RDC within local proximity that can receive the response may log the response message in its database along with signal quality metrics and a timestamp. They will then send the information back to the central server. The response may be sent by the server polling the RDC or by the RDC if it has data to send. Once the central server receives the PDK information from one or multiple RDCs, the server may then determine if any further communication with the PDK is necessary. If, for example, the system wants to validate the PDK, it can perform a validation. The server may then send a command to a specific RDC to set up communications with a specific PDK and wait for a response from that RDC. Because the communication between the RDC and the central server may not be instantaneous, the RDC may have to wait for the next PDK location tracking response. After performing CSMA-CA, it may immediately instruct the PDK to switch to the alternate channel. If, during the CSMA-CA, the RDC detected another device on the channel, the RDC may wait for

the next PDK location tracking response from that PDK and then re-attempt PDK channel reassignment. The PDK may then switch to the alternate channel, perform CSMA-CA, and send a link request to that specific RDC ID with its own ID included. The RDC, looking for the link request with its specific ID and a particular PDK ID, detects the request and then responds with a link grant. Further, the RDC may alert the central server of the link, and a data exchange occurs with information the server is interested in collecting by interrogating that PDK. After the data exchange occurs, the central server commands the RDC to terminate the link. The RDC may then terminate the link, and the PDK may returns to the c-Beacon channel, re-synchronizing to the beacon, and begin monitoring for its timeslot. The PDK may then continue to send responses back to all RDCs in its immediate vicinity when its specific superframe count and timeslot are valid.

It is noted that the foregoing description detailing a process of PDK validation and interrogation relates to one or more embodiments. However, in one or more other embodiments, the central server may have also altered the service provider information within the PDK.

If, during the switch to the alternate channel for RDC to PDK communications, the PDK determines the channel is occupied or the PDK does not receive a link grant back from the RDC, the PDK may perform one or more additional attempts. If after all attempts, the PDK does not receive a response from an RDC, that PDK may return to the c-beacon channel, realign to the beacon, and then begin sending its PDK location tracking ID.

If the RDC was unable to receive the link request from the PDK on the alternate channel, for a predefined period of time, the RDC may flag the error and continue listening on the channel. If the same RDC is again instructed to establish communications with the same PDK, the RDC may choose to use a different alternate channel and redirect the PDK to the new alternate channel for communications.

Now referring to FIG. **37**, it shows a PDK wakeup and response flow in a CRDC coordinated system. For purposes of describing FIG. **37**, it is assumed that the PDK has acquired system synchronization and has gone into the sleep mode after setting its timers to wake up on the next predefined superframe. The PDK remains in sleep mode until the wakeup timer expires and wakes up the PDK. The PDK then enables and tunes its receiver to the c-beacon channel and listens for the beacon for a predefined period of time. If no beacon is detected, the PDK checks for other CRDC channel available flags in its local memory. It then reassesses signal quality and beacons on the alternate CRDC channels.

After the PDK assesses the other CRDC channels and no beacon is found, the PDK goes back into rediscovery mode scanning all channels looking for a c-beacon. If no c-Beacon is found, the PDK then starts its deep sleep mode. In the event that other CRDC channels are present, the PDK assesses the signal quality of each channel and selects the best channel. The PDK then selects that channel and tunes to it listening for the CRDC beacon.

When the PDK receives the beacon, it checks all of the parameters associated with it including the superframe count. If the PDK determines the superframe count is not the correct one for it to wake up and respond on, it sets its internal sleep timer to wake up just before the next expected superframe it should respond to and returns to sleep mode. If the PDK determines that the beacon is on the PDK's expected superframe count, the PDK then stays awake, but stops listening until just before its expected timeslot. The PDK may then perform CSMA-CA to determine if the channel is busy. If the PDK determines the channel is busy, the PDK may again set its internal sleep timer for the next expected superframe and return to the sleep mode.

If the PDK finds the channel to be available, the PDK then transmits its location tracking response and waits for one additional timeslot for a response from an RDC. If the PDK receives a response from an RDC, it then performs the command sent by the RDC (e.g., to switch to the alternate communications channel). If the PDK does not receive a response from an RDC, the PDK may again set its internal sleep timer to wake up just before the next expected superframe it should respond to and then return to sleep mode.

As described above with reference to FIG. **31**, in one or more embodiments, an RDC may be located within an electronic game on an electronic gaming floor. Each game may have an integrated dual wireless link RDC, such as that described above with reference to FIG. **9**. The RDC may be used for PDK location tracking and PDK association. There are various approaches in integrating an RDC into an electronic game or other equipment housing. In one approach, shown in FIG. **38**, the integration of the RDC is from a physical perspective; no electrical connections exist between the RDC and the game. In this configuration, the RDC and electronic game need not even reside within the same enclosure; they coexist as two physically close, but separate, devices. They may not be connected in any way other than physical proximity. The purpose of placing them in close physical proximity is to allow the RDC to perform proximity detection for any player carrying a PDK that may be positioned near the front of the machine. In this configuration, each device (RDC and electronic game) may have separate connections to a central server (or an external data concentrator) used to connect both devices to a single wired connection back to the server. It is noted that the game may operate autonomously, with the possible exception of responses to any commands sent to it by the server. In this case, the RDC may provide both proximity detection and association with PDKs.

Now also referring to FIG. **39**, it shows an example of a handshake that may take place from the time a player carrying a PDK is detected to the time the game is enabled for that player. For purposes of clarity, the CRDC is not shown in FIG. **39**. The handshake starts by the PDK detecting a c-beacon. Each time the c-beacon is detected on the expected superframe and timeslot, the PDK may send out a PDK location tracking response.

The RDC near the game detects the response and sends the PDK's information back to the central server. The server realizes the user is close to the game and may send a command back to the game instructing it to display a message for the player in an effort to entice the player to play. In this example, the player may see the message and sit down at the game and press a button to commence play. In turn, the game sends a message back to the server indicating that the button has been pressed. The server then requests the RDC to make a connection with the player's PDK. Upon the next c-beacon, the player's PDK responds and the RDC receives the response. The RDC then transmits back to the PDK to change to another channel for association mode to begin. It is noted that up until this time, the PDK was in tracking mode. The PDK then switches to the alternate channel indicated by the RDC and sends out a PDK link request with both the PDK ID and the RDC ID. The RDC detects the request and sends back a PDK link grant. The PDK and the RDC then exchange secure information to establish trust, prior to establishing a secure link for validation of the PDK. The RDC may also lower its RF power and instruct the PDK to lower its RF

power in order to enforce close proximity. Periodic data exchange may continue to between the RDC and PDK.

After the secure link is established, the RDC may report back to the central server that the link is established between the RDC and PDK. The central server may then send a command to the game to display a message, which the game then displays. The player may see the message on the screen and presses his PDK's button causing it to transmit this event over the secure link to the RDC. The RDC relays this information back to the server. When the central Server receives the button press message, it can enable the game so that the player may begin playing.

The handshake continues as shown in FIG. **40**. After the game has been enabled for the player to play, the server may then send a command to the RDC to start polling the player's PDK. The RDC then periodically polls the PDK and may have returned the responses of each poll back to the server, as shown in FIG. **40**.

Still referring to the example being described with reference to FIGS. **39** and **40**, the player may continue to play the game for a while, then finishes and decides to leave. When the player exits the coverage area of the RDC near the game, the communications link is broken. The RDC attempts to poll the PDK, but receives no response. The RDC continues a few more times with no response. The RDC then reports back to the central server that the link was lost and the PDK is out of range. The central server then sends a message to the game to return it to an idle state so that another player can play, then requests the game to send back the player's game play information (if not already obtained), which the server logs.

As described above with reference to FIGS. **39** and **40**, a central server may be the communications medium linking an RDC to a game. It communicates with the game, tying the PDK to that game. If either device loses connection to the central server, game play may stay enabled.

Now referring to FIG. **41**, it shows an electronic game with an integrated RDC, internally connected to communicate directly with the game. Thus, all power and communication for the RDC may go through the electronic game. In this configuration, both the RDC and game reside within the same game enclosure where they jointly coexist. All information exchanged between the RDC and Bally Central Server must flow through the electronic game's controller and network interface. The purpose of placing them in the same enclosure allows the RDC to perform proximity detection for any player carrying a PDK® that may be positioned near the front of the machine.

At least one difference in the configuration shown in FIG. **41** relative to the configuration shown in FIG. **38** is that the game's internal controller may act to reduce the traffic loading on the back-end network and perform more local verification of the communications link between the PDK and the RDC. To illustrate a difference in interaction between these two configurations, reference is made to the handshake diagram shown in FIG. **42**. More particularly, FIG. **42** shows a handshake that may take place from the time a player carrying a PDK is detected to the time the game is enabled for that player. For purposes of clarity, the CRDC is not shown in FIG. **42**. The handshake starts by the PDK detecting a c-beacon. Each time the c-beacon is detected on the expected superframe and timeslot, the PDK sends out a PDK location tracking response. The RDC within the game detects the response and sends the PDK information back to a central server via the game's internal controller. The server is made aware that the user is close to the game and sends a command back to the game controller instructing the game to, for example, give the user a free game along with optionally displaying the user's name. The game then displays a message for the player in an effort to entice the player to play. The player may then see the message, sit down at the game, and press a button to commence game play. In turn, the game controller detects the button press and requests the RDC to make a connection with the player's PDK. Upon the next c-beacon, the PDK responds and the RDC receives the response. The RDC may then transmit back to the PDK a command to change to an alternate channel for association. The player's PDK then switches to the alternate channel indicated by the RDC and sends out a PDK link request with both the PDK ID and the RDC ID. The RDC detects the request and sends back a PDK link grant. The PDK and the RDC may then exchange secure information to establish trust, prior to establishing a secure link for validation of the PDK. The RDC may also lower its RF power and instruct the PDK to lower its RF power in order to enforce close proximity. Periodic data exchange may then continue between the RDC and PDK.

After the secure link is established, the RDC reports back to the game controller that the link is established between the RDC and PDK. The game may then display an instructional message for game play. The player may see the message on the screen and presses the player's PDK button, causing the PDK to transmit this event over the secure link to the RDC. The RDC may then send this information back to the game controller. When the game controller receives the button press message, it can enable the game so that the player can begin playing.

The handshake continues as shown in FIG. **43**. After the game was enabled for the player to play, the game controller sends a command to the RDC to start polling the player's PDK. The RDC then periodically polled his PDK and had the option of returning the responses of each poll back to the controller, as shown in FIG. **43**.

Returning to the example described above with reference to FIGS. **42** and **43**, the player may continue to play the game for a while, then finishes and decides to leave. When the player exits the coverage area of the RDC near the game, the communications link is broken. The RDC attempts to poll the PDK, but receives no response. The RDC may continue a few more times, with no response. The RDC then reports back to the game controller that the link was lost and the PDK is out of range. The game controller returns itself to an idle state so that another player can play and indicates back to the central server that the PDK is out of range. The server may then request the game to send the player's game play information (if not already received), which is then logged.

As described above with reference to FIGS. **42** and **43**, in one or more embodiments, the game controller may become more involved in the RDC to PDK association, thereby potentially reducing the back-end system network's traffic loading relative to that experienced with the configuration where an RDC is electrically separate from the game controller. The game controller may also react faster to the user walking out of range and may not require any response from the server in order to maintain the link. It is further noted that a broken link between the central server, game controller, and RDC may not result in any loss of any interaction between the RDC and the game controller.

While the invention has been described with respect to a limited number of embodiments, those skilled in the art, having benefit of the above description, will appreciate that other embodiments may be devised which do not depart from the scope of the present invention as described herein. Accordingly, the scope of the present invention should be limited only by the appended claims.

What is claimed is:

1. A method of facilitating data exchange, comprising:

assigning a first specific time slot for a first client device to wirelessly communicate with a fixed proximity-based reader device, the first specific time slot set according to a first class; and

assigning a second specific time slot for a second client device to wirelessly communicate with the fixed proximity-based reader device, the second specific time slot set according to a second class,

wherein the first and second specific time slots are determined based on synchronization information wirelessly received by the first and second client devices and priority level data associated with the first class and with the second class, and

wherein the first class is associated with one or more of the first client device and a user of the first client device, and the second class is associated with one or more of the second client device and a user of the second client device.

2. The method of claim 1, further comprising:

dynamically adjusting at least one of the first specific time slot and the second specific time slot.

3. The method of claim 1, wherein assigning the first specific time slot comprises:

masking a bit field of the first client device.

4. The method of claim 3, wherein the mask is wirelessly communicated to the first client device.

5. The method of claim 1, wherein the first class comprises at least one of a user associated with the first client device and a class of the first client device.

6. The method of claim 1, wherein assigning the first specific time slot is dependent on a network traffic load.

7. The method of claim 1, further comprising:

reassigning the first specific time slot to a third client device in response to a detection that the first client device is unavailable.

8. An apparatus, comprising:

a physical, portable key device for wirelessly communicating data with a fixed reader device when located in a wireless coverage area of the fixed reader device,

wherein the physical, portable key device is arranged to communicate with the fixed reader device during a specific time slot identified by a bit field stored in the key device, the specific time slot set according to a class associated with one or more of the physical, portable key device and the user of the physical, portable key device,

wherein the specific time slot is determined based on synchronization information wirelessly received by the key device and priority level data associated with the class.

9. The apparatus of claim 8, wherein the time slot is adjustable dependent on a mask applied to the bit field.

10. The apparatus of claim 9, wherein the mask is determined external to the key device.

11. The apparatus of claim 8, wherein the bit field represents an identification of the key device.

12. A system, comprising:

a network device arranged to wirelessly broadcast synchronization information in a first wireless coverage range; and

a portable client device for wirelessly communicating data with a reader device when the client device is located in communication proximity of the reader device, the client device storing a bit field identifying a specific time slot, the specific time slot set according to a class associated with one or more of the portable client device and the user of the portable client device,

wherein the client device is arranged to receive data from the network device during the specific time slot, the time slot determined based on the synchronization information and priority level data associated with the class.

13. The system of claim 12, wherein the client device is further arranged to transmit data to the network device during the time slot.

14. The system of claim 12, wherein the time slot is determined based on a mask applied to a bit field stored in the client device, and wherein the mask is wirelessly communicated to the client device as part of the synchronization information wirelessly broadcasted by the network device.

15. The system of claim 12, wherein the synchronization information is dependent on at least one of a user associated with the client device, a class of a user associated with the client device, a class of the client device, and a network traffic load in the system.

16. A system, comprising:

a network device configured to wirelessly broadcast synchronization information; and

a portable client device configured to wirelessly receive the synchronization information, the received synchronization information comprising information assigning a specific time slot during which the client device can receive data from the network device, the time slot being determined according to a priority level data associated with a class, the class associated with the one or more of the portable client device and the user of the portable client device.

17. The system of claim 16, further comprising:

a reader device configured to proximity sense the client device, and further configured to communicate data with the client device in accordance with the synchronization information.

18. A method of facilitating data exchange, comprising:

wirelessly broadcasting synchronization information to a portable client device, the synchronization information comprising information assigning a time slot during which the client device can receive data, the time slot being determined according to priority level data associated with a class, the class associated with one or more of the portable client device and the user of the portable client device; and

wirelessly broadcasting data for reception by the client device during the time slot.

* * * * *