A data frame transmitted in an allocated GTS shall use only short addressing.

The management of GTSs shall be undertaken by the PAN coordinator only. To facilitate GTS management, the PAN coordinator shall be able to store all the information necessary to manage seven GTSs. For each GTS, the PAN coordinator shall be able to store its starting slot, length, direction, and associated device address.

The GTS direction, which is relative to the data flow from the device that owns the GTS, is specified as either transmit or receive. The device address and direction shall, therefore, uniquely identify each GTS. Each device may request one transmit GTS and/or one receive GTS. For each allocated GTS, the device shall be able to store its starting slot, length, and direction. If a device has been allocated a receive GTS, it shall enable its receiver for the entirety of the GTS. In the same way, a PAN coordinator shall enable its receiver for the entirety of the GTS if a device has been allocated a transmit GTS. If a data frame is received during a receive GTS and an acknowledgment is requested, the device shall transmit the acknowledgment frame as usual. Similarly, a device shall be able to receive an acknowledgment frame during a transmit GTS.

A device shall attempt to allocate and use a GTS only if it is currently tracking the beacons. The MLME is instructed to track beacons by issuing the MLME-SYNC.request primitive with the TrackBeacon parameter set to TRUE. If a device loses synchronization with the PAN coordinator, all its GTS allocations shall be lost.

The use of GTSs by an RFD is optional.

#### 7.5.7.1 CAP maintenance

The PAN coordinator shall preserve the minimum CAP length of *aMinCAPLength* and take preventative action if the minimum CAP is not satisfied. However, an exception shall be allowed for the accommodation of the temporary increase in the beacon frame length needed to perform GTS maintenance. If preventative action becomes necessary, the action chosen is left up to the implementation, but may include one or more of the following:

— Limiting the number of pending addresses included in the beacon.
— Not including a payload field in the beacon frame.
— Deallocating one or more of the GTSs

#### 7.5.7.2 GTS allocation

A device is instructed to request the allocation of a new GTS through the MLME-GTS.request primitive, with GTS characteristics set according to the requirements of the intended application.

To request the allocation of a new GTS, the MLME shall send the GTS request command (see 7.3.3.1) to the PAN coordinator. The characteristics type subfield of the GTS characteristics field of the request shall be set to 1 (GTS allocation), and the length and direction subfields shall be set according to the desired characteristics of the required GTS. If the GTS request command is received correctly, the PAN coordinator shall send an acknowledgment frame, thus confirming receipt.

On receipt of a GTS request command indicating a GTS allocation request, the PAN coordinator shall first check if there is available capacity in the current superframe, based on the remaining length of the CAP and the desired length of the requested GTS. The superframe shall have available capacity if the maximum number of GTSs has not been reached and allocating a GTS of the desired length would not reduce the length of the CAP to less than *aMinCAPLength*. GTSs shall be allocated on a first-come-first-served basis by the PAN coordinator provided there is sufficient bandwidth available. The PAN coordinator shall make this decision within *aGTSDescPersistenceTime* superframes.


Copyright © 2003 IEEE. All rights reserved.
Authorized licensed use limited to: IEEE - Staff. Downloaded on October 28,2024 at 20:20:02 UTC from IEEE Xplore. Restrictions apply.

INTEL-1011
U.S. Patent 8,219,129

On receipt of the acknowledgment to the GTS request command, the device shall continue to track beacons and wait for at most *aGTSDescPersistenceTime* superframes. If no GTS descriptor for the device appears in the beacon within this time, the MLME of the device shall notify the next higher layer of the failure. This notification is achieved when the MLME issues the MLME-GTS.confirm primitive (see 7.1.7.2) with a status of NO_DATA.

When the PAN coordinator determines whether capacity is available for the requested GTS, it shall generate a GTS descriptor with the requested specifications and the short address of the requesting device. If the GTS was allocated successfully, the PAN coordinator shall set the start slot in the GTS descriptor to the superframe slot at which the GTS begins and the length in the GTS descriptor to the length of the GTS. In addition, the PAN coordinator shall notify the next higher layer of the new GTS. This notification is achieved when the MLME of the PAN coordinator issues the MLME-GTS.indication primitive (see 7.1.7.3) with the characteristics of the allocated GTS. If there was not sufficient capacity to allocate the requested GTS, the start slot shall be set to 0 and the length to the largest GTS length that can currently be supported. The PAN coordinator shall then include this GTS descriptor in its beacon and update the GTS specification field of the beacon frame accordingly. The PAN coordinator shall also update the final CAP slot subfield of the superframe specification field of the beacon frame, indicating the final superframe slot utilized by the decreased CAP. The GTS descriptor shall remain in the beacon frame for *aGTSDescPersistenceTime* superframes, after which it shall be removed automatically. The PAN coordinator shall be allowed to reduce its CAP below *aMinCAPLength* to accommodate the temporary increase in the beacon frame length due to the inclusion of the GTS descriptor.

On receipt of a beacon frame containing a GTS descriptor corresponding to *macShortAddress*, the device shall process the descriptor. The MLME of the device shall then notify the next higher layer of whether the GTS allocation request was successful. This notification is achieved when the MLME issues the MLME-GTS.confirm primitive with a status of SUCCESS (if the start slot in the GTS descriptor was greater than zero) or DENIED (if the start slot was equal to zero or if the length did not match the requested length).

#### 7.5.7.3 GTS usage

When the MAC sublayer of a device receives an MCPS-DATA.request primitive (see 7.1.1.1) with the TxOptions parameter indicating a GTS transmission, it shall first determine whether it has a valid GTS. If the device is a PAN coordinator, it shall determine whether it has a receive GTS corresponding to the device with the requested destination address. If the device is not a PAN coordinator, it shall determine whether a transmit GTS has been allocated. If a valid GTS is found, the MAC sublayer shall transmit the data during the GTS, i.e., between its starting slot and its starting slot plus its length. At this time, the MAC sublayer shall transmit the MPDU immediately without using CSMA-CA, provided the requested transaction can be completed before the end of the GTS. If the requested transaction cannot be completed before the end of the current GTS, the MAC sublayer shall defer the transmission until the specified GTS in the next superframe.

If the device has any receive GTSs, the MAC sublayer of the device shall ensure that the receiver is enabled at a time prior to the start of the GTS and for the duration of the GTS, as indicated by its starting slot and its length. The PAN coordinator shall send all frames within a receive GTS with the acknowledgment request subfield of the frame control field set to 1.

When the MAC sublayer of the PAN coordinator receives a MCPS-DATA.request primitive with the TxOptions parameter indicating a GTS transmission, it shall defer the transmission until the start of the receive GTS of the intended recipient. In this case, the address of the device with the message requiring a GTS transmission shall not be added to the list of pending addresses in the beacon frame (see 7.5.5). For all allocated transmit GTSs (relative to the device), the MAC sublayer of the PAN coordinator shall ensure that its receiver is enabled at a time prior to the start and for the duration of each GTS.

Copyright © 2003 IEEE. All rights reserved.

Authorized licensed use limited to: IEEE - Staff. Downloaded on October 28,2024 at 20:20:02 UTC from IEEE Xplore. Restrictions apply.

INTEL-1011
U.S. Patent 8,219,129

Before commencing transmission in a GTS, each device shall ensure that the data transmission, the acknowledgment, if requested, and the IFS, suitable to the size of the data frame, can be completed before the end of the GTS.

If a device misses the beacon at the beginning of a superframe, it shall not use its GTSs until it receives a subsequent beacon correctly. If a loss of synchronization occurs due to the loss of the beacon, the device shall consider all of its GTSs deallocated.

#### 7.5.7.4 GTS deallocation

A device is instructed to request the deallocation of an existing GTS through the MLME-GTS.request primitive (see 7.1.7.1), using the characteristics of the GTS it wishes to deallocate. From this point onward, the GTS to be de-allocated shall not be used by the device, and its stored characteristics shall be reset.

To request the deallocation of an existing GTS, the MLME shall send the GTS request command (see 7.3.3.1) to the PAN coordinator. The characteristics type subfield of the GTS characteristics field of the request shall be set to 0 (i.e., GTS deallocation), and the length and direction subfields shall be set according to the characteristics of the GTS to deallocate. If the GTS request command is received correctly, the PAN coordinator shall send an acknowledgment frame, thus confirming receipt. On receipt of the acknowledgment to the GTS request command, the MLME shall notify the next higher layer of the deallocation. This notification is achieved when the MLME issues the MLME-GTS.confirm primitive (see 7.1.7.2) with a status of SUCCESS and a GTSCharacteristics parameter with its characteristics type subfield set to 0. If the GTS request command is not received correctly by the PAN coordinator, it shall determine that the device has stopped using its GTS by the procedure described in 7.5.7.6.

On receipt of a GTS request command with the characteristics type subfield of the GTS characteristics field set to 0 (GTS deallocation), the PAN coordinator shall attempt to deallocate the GTS. If the GTS characteristics contained in the GTS request command do not match the characteristics of a known GTS, the PAN coordinator shall ignore the request. If the GTS characteristics contained in the GTS request command match the characteristics of a known GTS, the MLME of the PAN coordinator shall deallocate the specified GTS and notify the next higher layer of the change. This notification is achieved when the MLME issues the MLME-GTS.indication primitive (see 7.1.7.3) with a GTSCharacteristics parameter containing the characteristics of the deallocated GTS and a characteristics type subfield set to 0. The PAN coordinator shall also update the final CAP slot subfield of the superframe specification field of the beacon frame, indicating the final superframe slot utilized by the increased CAP. It shall not add a descriptor to the beacon frame to describe the deallocation.

When a GTS deallocation is initiated by the PAN coordinator, the MLME shall notify the next higher layer of the change. This notification is achieved when the MLME issues the MLME-GTS.indication primitive with a GTSCharacteristics parameter containing the characteristics of the deallocated GTS and a characteristics type subfield set to 0. The PAN coordinator shall then deallocate the GTS and add a GTS descriptor into its beacon frame corresponding to the deallocated GTS, but with its starting slot set to 0. The descriptor shall remain in the beacon frame for *aGTSDescPersistenceTime* superframes. The PAN coordinator shall be allowed to reduce its CAP below *aMinCAPLength* to accommodate the temporary increase in the beacon frame length due to the inclusion of the GTS descriptor.

On receipt of a beacon frame containing a GTS descriptor corresponding to *macShortAddress* and a start slot equal to 0, the device shall immediately stop using the GTS. The MLME of the device shall then notify the next higher layer of the deallocation. This notification is achieved when the MLME issues the MLME-GTS.indication primitive with a GTSCharacteristics parameter containing the characteristics of the deallocated GTS and a characteristics type subfield set to 0.


Copyright © 2003 IEEE. All rights reserved.
Authorized licensed use limited to: IEEE - Staff. Downloaded on October 28,2024 at 20:20:02 UTC from IEEE Xplore. Restrictions apply.

**INTEL-1011**
**U.S. Patent 8,219,129**

#### 7.5.7.5 GTS reallocation

The deallocation of a GTS may result in the superframe becoming fragmented. For example, Figure 65 shows three stages of a superframe with allocated GTSs. In stage 1, three GTSs are allocated starting at slots 14, 10, and 8, respectively. If GTS 2 is now deallocated (stage 2), there will be a gap in the superframe during which nothing can happen. To solve this, GTS 3 will have to be shifted to fill the gap, thus increasing the size of the CAP (stage 3).

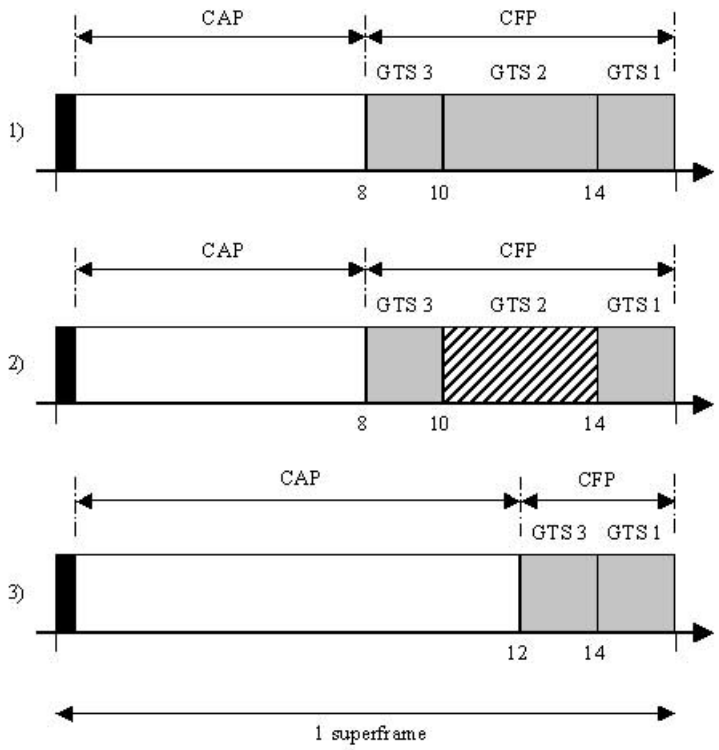


**Figure 65—CFP defragmentation on GTS deallocations**

The PAN coordinator shall ensure that any gaps occurring in the CFP, appearing due to the deallocation of a GTS, are removed to maximize the length of the CAP.

When a GTS is deallocated by the PAN coordinator, it shall add a GTS descriptor into its beacon frame indicating that the GTS has been deallocated. If the deallocation is initiated by a device, the PAN coordinator shall not add a GTS descriptor into its beacon frame to indicate the deallocation. For each device with an allocated GTS having a starting slot lower than the GTS being deallocated, the PAN coordinator shall update the GTS with the new starting slot and add a GTS descriptor to its beacon corresponding to this adjusted GTS. The new starting slot is computed so that no space is left between this GTS and either the end of the CFP, if the GTS appears at the end of the CFP, or the start of the next GTS in the CFP.

In situations where multiple reallocations occur at the same time, the PAN coordinator may choose to perform the reallocation in stages. The PAN coordinator shall keep each GTS descriptor in its beacon for *aGTSDescPersistenceTime* superframes.

Copyright © 2003 IEEE. All rights reserved.

Authorized licensed use limited to: IEEE - Staff. Downloaded on October 28,2024 at 20:20:02 UTC from IEEE Xplore. Restrictions apply.

INTEL-1011
U.S. Patent 8,219,129

On receipt of a beacon frame containing a GTS descriptor corresponding to *macShortAddress* and a direction and length corresponding to one of its GTSs, the device shall adjust the starting slot of the GTS corresponding to the GTS descriptor and start using it immediately.

In cases where it is necessary for the PAN coordinator to include a GTS descriptor in its beacon, it shall be allowed to reduce its CAP below *aMinCAPLength* to accommodate the temporary increase in the beacon frame length. After *aGTSDescPersistenceTime* superframes, the PAN coordinator shall remove the GTS descriptor from the beacon.

#### 7.5.7.6 GTS expiration

The MLME of the PAN coordinator shall attempt to detect when a device has stopped using a GTS using the following rules:

— For a transmit GTS, the MLME of the PAN coordinator shall assume that a device is no longer using its GTS if a data frame is not received from the device in the GTS at least every 2**n* superframes, where *n* is defined below.
— For receive GTSs, the MLME of the PAN coordinator shall assume that a device is no longer using its GTS if an acknowledgment frame is not received from the device at least every 2**n* superframes, where *n* is defined below.

The value of *n* is defined as follows:

$n = 2^{(8-macBeaconOrder)}$ $\quad 0 \le macBeaconOrder \le 8$

$n = 1$ $\quad 9 \le macBeaconOrder \le 14$

### 7.5.8 Frame security

The MAC sublayer is responsible for providing security services on specified incoming and outgoing frames when requested to do so by the higher layers. IEEE Std 802.15.4-2003 supports the following security services (see 5.4.6.1 for definitions):

— Access control
— Data encryption
— Frame integrity
— Sequential freshness

The protocol also provides the following security modes (see 5.4.6.2 for definitions):

— Unsecured mode
— ACL mode
— Secured mode

The information determining how to provide the security is found in the MAC PIB (see Table 72 in 7.4.2).

#### 7.5.8.1 ACL entries

The MAC PIB security attributes contain a single default ACL entry and a number of additional ACL entries. The default ACL entry is known by every device in the PAN and is used in situations in which the device needs to communicate with a second device or with multiple devices that it may not know individually. Individual ACL entries are used in situations in which the device shares a key with a specific known device.


Copyright © 2003 IEEE. All rights reserved.
Authorized licensed use limited to: IEEE - Staff. Downloaded on October 28,2024 at 20:20:02 UTC from IEEE Xplore. Restrictions apply.

INTEL-1011
U.S. Patent 8,219,129

The default ACL entry consists of *macDefaultSecurity*, which indicates whether security is in use for devices not in the ACL; *macDefaultSecuritySuite*, which indicates the default security suite to use for frames to be sent or received from devices not in the ACL; and *macDefaultSecurityMaterial*, which indicates the keying material to use in secure communications involving frames to be sent or received from devices not in the ACL. If *macDefaultSecurity* is set to FALSE, *macDefaultSecuritySuite* and *macDefaultSecurityMaterial* shall not be used.

The additional ACL entries are contained in *macACLEntryDescriptorSet.* Each ACL entry corresponds to a trusted device and consists of its PAN identifier, its 64 bit extended address, its short address (or 0xffff if this address is not known), and its security suite and related keying material.

#### 7.5.8.2 Functional description of unsecured mode

Unsecured mode is the default security mode for the MAC sublayer and provides no MAC sublayer security. A device operating in unsecured mode shall not utilize the ACL entries and shall not perform any security related operations on incoming frames. When a device receives a frame while in this mode, the MAC sublayer shall perform its filtering operations on the incoming frame, as described in 7.5.6.2, before checking the security enabled subfield. If the security enabled subfield in the frame is set to 1 and the device is not performing an active or passive scan (see 7.1.11.1), the MAC sublayer shall pass the frame to the next higher layer. This is achieved by issuing the MCPS-DATA.indication primitive (see 7.1.1.3) with the SecurityUse field set to TRUE and the ACLEntry field set to 0x08. If the device is performing an active or passive scan, the device shall accept beacon frames with the security enabled subfield set to 1 and set the SecurityUse, ACLEntry, and SecurityFailure fields of the PAN descriptor corresponding to that beacon to TRUE, 0x08, and TRUE, respectively (see Table 41). If the MAC sublayer receives a data frame with the security enabled subfield set to 0, it shall pass the frame to the next higher layer. This is achieved by issuing the MCPS-DATA.indication primitive (see 7.1.1.3) with the SecurityUse field set to FALSE and the ACLEntry field set to 0x08.

#### 7.5.8.3 Functional description of ACL mode

ACL mode provides a mechanism for the MAC sublayer to indicate to the higher layer if a received frame purportedly originated from a device in the ACL. A device operating in ACL mode shall not make any modifications to the MAC frames or perform any cryptographic operations on the frames. As a result, ACL mode provides only a means for the device to filter received frames according to the source address in the frame, but not a means to securely determine the originator of the frame. When a device receives a frame while in this mode, the MAC sublayer shall perform its filtering operations on the incoming frame, as described in 7.5.6.2, before checking the security enabled subfield. If the security enabled subfield in the frame is set to 1 and the device is not performing an active or passive scan (see 7.1.11.1), the MAC sublayer shall pass the frame to the next higher layer. This is achieved by issuing the MCPS-DATA.indication primitive (see 7.1.1.3) with the SecurityUse field set to TRUE and the ACLEntry field set to the *macSecurityMode* parameter value from the ACL entry associated with the sender of the data frame, if present. If the sender of the data frame was not found in the ACL, the ACLEntry field shall be set to 0 x 08. If the device is performing an active or passive scan, the device shall accept beacon frames with the security enabled subfield set to 1 and set the SecurityUse and SecurityFailure fields of the PAN descriptor corresponding to that beacon to TRUE, and the ACLEntry field to the *macSecurityMode* parameter value from the ACL entry associated with the sender of the data frame, if present. If the sender of the data frame was not found in the ACL, the value 0x08 shall be used in the ACLEntry field (see Table 41). If the MAC sublayer receives a data frame with the security enabled subfield set to 0, it shall pass the frame to the next higher layer. This is achieved by issuing the MCPS-DATA.indication primitive (see 7.1.1.3) with the SecurityUse field set to FALSE and the ACLEntry field set to the *macSecurityMode* parameter value from the ACL entry associated with the sender of the data frame, if present. If the sender of the data was not found in the ACL, the ACLEntry field shall be set to 0x08. The device shall determine whether a device is in the ACL by searching *macACLEntryDescriptorSet* for an individual ACL entry with a value of ACLPANId that matches the received PAN identifier and a value of ACLExtendedAddress or ACLShortAddress that

Copyright © 2003 IEEE. All rights reserved.

Authorized licensed use limited to: IEEE - Staff. Downloaded on October 28,2024 at 20:20:02 UTC from IEEE Xplore. Restrictions apply.

INTEL-1011
U.S. Patent 8,219,129

matches the received source address. If no source address is present in the frame, the ACLEntry field shall be set to 0 x 08.

#### 7.5.8.4 Functional description of secured mode

Secured mode provides a mechanism for the MAC sublayer to both use the ACL functionality and provide cryptographic protection on incoming and outgoing frames. While in this mode, if the MAC sublayer receives an incoming frame or a request from the higher layer to transmit a frame, the MAC sublayer shall process the frame as specified in 7.5.8.4.1 and 7.5.8.4.2.

##### 7.5.8.4.1 Processing outgoing frames in secured mode

While in secured mode, if the MLME receives a message from a higher layer to prepare a secure frame for transmission (i.e., the security enabled bit in the TxOptions is set to 1), the MLME shall scan the entries in the ACL for the correct entry to use. The MLME shall first search through *macACLEntryDescriptorSet* to find an entry in which the ACLPANId field and the ACLExtendedAddress or ACLShortAddress field match the destination address information of the frame to be created. If a match is found, the MLME shall select the security suite from the associated ACLSecuritySuite field and the security material from the associated ACLSecurityMaterial field for use on the outgoing frame.

If the MLME is unable to locate an ACLPANId and an ACLExtendedAddress or ACLShortAddress that matches the destination address information of the frame to be created, the MLME shall examine *macDefaultSecurity*. If *macDefaultSecurity* is equal to TRUE, the MLME shall select the security suite indicated in *macDefaultSecuritySuite* and the security material from *macDefaultSecurityMaterial* for use on the outgoing frame.

If the MLME is unable to locate an ACLPANId and an ACLExtendedAddress or ACLShortAddress that matches the destination address information of the frame to be created and *macDefaultSecurity* is equal to FALSE, the MLME shall inform the next higher layer. This notification is achieved by issuing the MLME-COMM-STATUS.indication primitive with a status of UNAVAILABLE_KEY.

After the MLME obtains the appropriate security suite and security material from the ACL, the MLME shall first set the security enabled subfield in the frame control field to 1 before performing the cryptographic operations on the frame.

If the security suite specifies the use of encryption, the encryption operation shall be applied only to the data in the payload field within the MAC payload, i.e., the beacon payload field (see 7.2.2.1.8), command payload field (see 7.2.2.4.3), or data payload field (see 7.2.2.2.2), depending on the frame type. The remaining fields shall be left unencrypted. If a frame does not contain a payload field, encryption shall not be used. The result of the encryption operation shall be inserted into the payload field of the frame in the place of the original data.

If the security suite specifies the use of an integrity code, the integrity code shall be applied to the MHR concatenated with the MAC payload (see 7.2 for information on the MAC frame format). The result of the integrity code computation shall be placed in the payload field within the MAC payload of the frame in addition to any other data in the payload field. If the payload field does not contain any data, then it shall contain only the integrity code. Integrity codes shall not be used for acknowledgment frames.

The ordering and exact manner of performing the encryption and integrity operations and the placement of the resulting encrypted data or integrity code within the beacon payload, command payload, or data payload field are defined by the selected security suite (see 7.6).

If any of the security operations fail, the MLME shall not transmit the requested frame, but shall inform the next higher layer. This notification is achieved by issuing the MLME-COMM-STATUS.indication primitive


Copyright © 2003 IEEE. All rights reserved.
Authorized licensed use limited to: IEEE - Staff. Downloaded on October 28,2024 at 20:20:02 UTC from IEEE Xplore. Restrictions apply.

INTEL-1011
U.S. Patent 8,219,129

with a status of FAILED_SECURITY_CHECK. If the length of the resulting frame is longer than *aMax-MACFrameSize*, the MLME shall not transmit the requested frame, but shall inform the next higher layer. This notification is achieved by issuing the MLME-COMM-STATUS.indication primitive with a status of FRAME_TOO_LONG.

If the security operations have been successfully performed and the payload field within the MAC payload has been modified appropriately, the device shall compute the FCS over the modified frame.

#### 7.5.8.4.2 Processing incoming frames in secured mode

Any incoming frame may be protected by security. If the MLME receives a frame while in secured mode, it shall perform its filtering operations on the incoming frame, as described in 7.5.6.2, before checking the security enabled subfield to determine whether security is used for that frame.

If the security enabled subfield of the frame control field is set to 0 and the incoming frame is an association request command frame, the MLME of the coordinator shall pass the frame information to the next higher layer. This is achieved by issuing the MLME-ASSOCIATE.indication primitive (see 7.1.3.2). If the security enabled subfield of the frame control field is set to 0 and the incoming frame is a beacon request command frame, the coordinator shall process the frame as described in 7.5.2.1.2. If the security enabled subfield of the frame control field is set to 0 and the device is performing an active or passive scan, the device shall accept beacon frames and set the SecurityUse and SecurityFailure fields of the PAN descriptor corresponding to each received beacon to FALSE and TRUE, respectively, and the ACLEntry field to the *macSecurityMode* parameter value from the ACL entry associated with the sender of the data frame, if present. If the sender of the data was not found in the ACL, the value 0x08 shall be used in the ACLEntry field (see Table 41). Otherwise, if the security enabled subfield of the frame control field is set to 0, the device shall pass the frame to the next higher layer. This is achieved by issuing the MCPS-DATA.indication primitive (see 7.1.1.3) with the SecurityUse field set to FALSE and the ACLEntry field set to the *macSecurityMode* parameter value from the ACL entry associated with the sender of the data frame, if present. If the sender of the data frame was not found in the ACL, the value 0 x 08 shall be used in the ACLEntry field.

If the security enabled subfield in the frame control field is set to 1, the MLME shall scan the entries in the MAC PIB security attributes for the correct entry to use. The MLME shall first search through *macACL-EntryDescriptorSet* to find an entry in which the ACLPANId, ACLExtendedAddress, and ACLShortAddress fields match the source address information of the frame received. If a match is found, the MLME shall select the security suite from the associated ACLSecuritySuite field and the security material from the associated ACLSecurityMaterial field for use on the incoming frame.

If the MLME is unable to locate an ACLPANId and an ACLExtendedAddress or ACLShortAddress that matches the source address information of the received frame, the MLME shall examine *macDefault-Security*. If *macDefaultSecurity* is equal to TRUE, the MLME shall select the security suite from *mac-DefaultSecuritySuite* and the security material from *macDefaultSecurityMaterial* for use on the incoming frame.

If the MLME is unable to locate an ACLPANId and an ACLExtendedAddress or ACLShortAddress that matches the source address information of the received frame and *macDefaultSecurity* is equal to FALSE and the device is not performing an active or passive scan (see 7.1.11.1), the MLME shall pass the frame to the next higher layer. This is achieved by issuing the MCPS-DATA.indication primitive (see 7.1.1.3) with the SecurityUse field set to TRUE and the ACLEntry field set to 0x08. If the device is performing an active or passive scan, the device shall accept secure beacon frames for which the corresponding security material cannot be found and set the SecurityUse, ACLEntry, and SecurityFailure fields of the PAN descriptor corresponding to that beacon to TRUE, 0x08, and TRUE, respectively (see Table 41).

After the MLME obtains the appropriate security suite and security material values from the ACL, the MAC sublayer shall apply the security operations, defined by these values, to the frame.

Copyright © 2003 IEEE. All rights reserved.

Authorized licensed use limited to: IEEE - Staff. Downloaded on October 28,2024 at 20:20:02 UTC from IEEE Xplore. Restrictions apply.

INTEL-1011
U.S. Patent 8,219,129

If the security suite specifies the use of encryption, the decryption operation shall be applied only to the data in the payload field within the MAC payload, i.e., the beacon payload field (see 7.2.2.1.8), command payload field (see 7.2.2.4.3), or data payload field (see 7.2.2.2.2), depending on the frame type. If a frame does not contain any data in the payload field, decryption shall not be used. The result of the decryption operation shall be inserted into the payload field of the frame in the place of the original encrypted data.

If the security suite specifies the use of an integrity code, the integrity code shall be checked by first removing the integrity code and any other security suite specific data (e.g., the frame counter and key sequence counter) from the payload field within the MAC payload and then verifying the integrity code on the MHR concatenated with the MAC payload.

The ordering and exact manner of performing the decryption and integrity operations and the location of the security data within the payload field are defined by the security suite in use (see 7.6).

If at least one of the security operations fails and the device is not performing an active or passive scan (see 7.1.11.1), the MLME shall discard the frame and inform the next higher layer. This notification is achieved by issuing the MLME-COMM-STATUS.indication primitive with a status of FAILED_SECURITY_CHECK. If the device is performing an active or passive scan, the device shall accept beacon frames that cause a security operation failure and set the SecurityUse and SecurityFailure fields of the PAN descriptor to TRUE and set the ACLEntry field to TRUE if the key used in the operations was found in *macACLEntryDescriptorSet* or FALSE if the key used in the operations was found in *macDefaultSecurityMaterial* (see Table 41).

If the security operations have been successfully performed and the payload field within the MAC payload has been modified appropriately, the device shall then continue to process the frame. In the indication of the frame to the higher layer, the MAC shall set the SecurityUse field to TRUE and set the ACLEntry field to TRUE if the key used in the operations was found in *macACLEntryDescriptorSet* or FALSE if the key used in the operations was found in *macDefaultSecurityMaterial*.

## 7.6 Security suite specifications

Security suites may be used when a device is operating in secured mode. A security suite consists of a set of operations to perform on MAC frames that provide security services. The security suite name indicates the symmetric cryptography algorithm, mode, and integrity code bit length. The bit length of the integrity code is less than or equal to the block size of the symmetric algorithm and determines the probability that a random guess of the integrity code would be correct. This bit length does not correspond to the strength of the underlying algorithm. For all security suites in this standard, the algorithm used shall be advanced encryption standard (AES) (see 7.6.1.7). Each device that implements security shall support the AES-CCM-64 security suite (see 7.6.3) and zero or more additional security suites. Each security suite is specified by a 1 octet value as shown in Table 75; an identifier of 0x00 indicates that secured mode is not to be used.

**Table 75—Security suite list**

| Identifier | Security suite name | Security services | | | | Subclause |
|---|---|---|---|---|---|---|
| | | Access control | Data encryption | Frame integrity | Sequential freshness (optional) | |
| 0 x 00 | None | | | | | |
| 0 x 01 | AES-CTR | X | X | | X | 7.6.2 |
| 0 x 02 | AES-CCM-128 | X | X | X | X | 7.6.3 |


Copyright © 2003 IEEE. All rights reserved.
Authorized licensed use limited to: IEEE - Staff. Downloaded on October 28,2024 at 20:20:02 UTC from IEEE Xplore. Restrictions apply.

INTEL-1011
U.S. Patent 8,219,129

**Table 75—Security suite list *(continued)***

| Identifier | Security suite name | Security services | | | | Subclause |
|---|---|---|---|---|---|---|
| | | Access control | Data encryption | Frame integrity | Sequential freshness (optional) | |
| 0 x 03 | AES-CCM-64 | X | X | X | X | 7.6.3 |
| 0 x 04 | AES-CCM-32 | X | X | X | X | 7.6.3 |
| 0 x 05 | AES-CBC-MAC-128 | X | | X | | 7.6.4 |
| 0 x 06 | AES-CBC-MAC-64 | X | | X | | 7.6.4 |
| 0 x 07 | AES-CBC-MAC-32 | X | | X | | 7.6.4 |

### 7.6.1 Security suite building blocks

The following methods are defined for use in the security suites specified in this standard:

— Bit ordering
— Concatenation
— Integer encoding and counter incrementing
— CTR encryption
— CBC-MAC authentication
— CCM combined encryption and authentication
— AES encryption
— PIB security material

#### 7.6.1.1 Bit ordering

For security operations in this standard, a bit is defined to be an element of the set {0, 1}. An octet (also called a byte) is defined to be a bit string of length 8 arranged in the order in which it would be transmitted, where bit 7 is the first bit in the octet and bit 0 is the last bit in the octet. An octet string (also called a byte string) is an array of octets arranged in order with the most significant octet first. The terms *first* and *last* and *leftmost* and *rightmost* are used to distinguish the ends of octet strings (first and leftmost are equivalent; last and rightmost are equivalent). Within an octet, the terms *first* and *last*, *leftmost* and *rightmost*, and *high-order* and *low-order* are used for the order of the bits (first, leftmost, and high-order are equivalent; last, rightmost, and low-order are equivalent).

Note that the first bit in an octet string is indexed as bit 7 of octet 0 and represents the high-order bit of the first octet. The 16th bit in an octet string is indexed as bit 0 of octet 2 and represents the low-order bit of the second octet.

#### 7.6.1.2 Concatenation

In this standard, concatenation of two octet strings $a$ and $b$ of length $m$ and $n$, respectively, denoted $a||b$, consists of the octet string of length $m + n$ with the leftmost $m$ octets equal to $a$ and the rightmost $n$ octets equal to $b$.

Copyright © 2003 IEEE. All rights reserved.

Authorized licensed use limited to: IEEE - Staff. Downloaded on October 28,2024 at 20:20:02 UTC from IEEE Xplore. Restrictions apply.

INTEL-1011
U.S. Patent 8,219,129

#### 7.6.1.3 Integer encoding and counter incrementing

Unless otherwise stated, for security operations in 7.6 and in Annex Annex B of this standard, when an integer is represented as an octet string, the first octet (octet 0) corresponds to the most significant octet and the first bit (bit 7) within the first octet corresponds to the MSB. An octet string $A$ of length $n$, is written as a bit string $A = a_{0,7}a_{0,6}a_{0,5} \ldots a_{n-1,1}a_{n-1,0}$. An octet string or bit string is converted to an integer $I$ by assigning each bit $a_{i,j}$ the value $a_{i,j}*2^{8i+j}$ and setting $I$ to be the sum of all of the values.

As an example of integer encoding, consider the integer 11146, which corresponds to the octet string composed of the two octets 0x2b 8a. This integer can be represented as the bit string 0010 1011 1000 1010. In this case, the most significant octet (octet 0) is 0x2b and the least significant octet (octet 1) is 0 x 8a. The LSB (bit 0) of octet 0 has the value 1, as does the MSB (bit 7) of octet 1. The integer 1 can be represented as a 4 octet string by 0x00 00 00 01 and as a bit string by 0000 0000 0000 0000 0000 0000 0000 0001.

The counter incrementing operation in this standard takes as input an integer that is encoded as an octet string of length $n$. When the counter incrementing operation is invoked, the integer shall be incremented (increased by 1). If the incremented integer is less than $2^{8n}$, the operation shall return the octet string encoding of the new integer. Otherwise the operation shall set the counter to $2^{8n} - 1$ and return an error (i.e., the counter incrementing operation would have caused the integer value to roll over).

#### 7.6.1.4 CTR encryption

The counter mode (CTR) symmetric encryption algorithm used in this standard consists of the generation of a key stream using a block cipher in CTR, with a given key and nonce, and performing an exclusive OR (XOR) of the key stream with the plaintext and integrity code. A nonce is a time stamp, a counter, or a special marker intended to prevent unauthorized message replay. The decryption operation consists of the generation of the key stream and the XOR of the key stream with the ciphertext to obtain the plaintext.

All of the operations (listed in the paragraph above) shall be performed as specified in Annex Annex B, which defines CTR encryption in the general sense. A security suite implementing CTR encryption will specify any parameters left unspecified in Annex Annex B according to the requirements of that particular security suite.

#### 7.6.1.5 CBC-MAC authentication

The cipher block chaining message authentication code (CBC-MAC) symmetric authentication algorithm used in this standard consists of the generation of an integrity code using a block cipher in CBC mode computed on a message that includes the length of the authenticated data at the beginning of the data themselves. The verification operation consists of the computation of this integrity code and comparison to the received integrity code.

All of the above operations shall be performed as specified in Annex Annex B, which defines CBC-MAC mode in the general sense. A security suite implementing CBC-MAC authentication will specify any parameters left unspecified in Annex Annex B according to the requirements of that particular security suite.

#### 7.6.1.6 CCM combined encryption and authentication

The CTR encryption plus CBC-MAC (CCM) combined symmetric encryption and authentication mechanism used in this standard consists of the generation of an integrity code followed by the encryption of plaintext data and the integrity code. The output consists of the encrypted data and the encrypted integrity code.

The symmetric authentication operation used in this security suite consists of the generation of an integrity code using a block cipher in CBC mode computed on a nonce followed by padded authentication data


Copyright © 2003 IEEE. All rights reserved.
Authorized licensed use limited to: IEEE - Staff. Downloaded on October 28,2024 at 20:20:02 UTC from IEEE Xplore. Restrictions apply.

INTEL-1011
U.S. Patent 8,219,129

followed by padded plaintext data, if present. The verification operation consists of the computation of this integrity code and comparison to the received integrity code.

The symmetric encryption operation used in this security suite consists of the generation of a key stream using a block cipher in CTR with a given key and nonce and performing an XOR of the key stream with the integrity code and plaintext, if present. The decryption operation consists of the generation of the key stream and the XOR of the key stream with the ciphertext to obtain the plaintext and integrity code.

All of the operations (listed in the paragraph above) shall be performed as specified in Annex Annex B, which defines CCM mode in the general sense. A security suite implementing CCM combined encryption and authentication will specify any parameters left unspecified in Annex Annex B according to the requirements of that particular security suite.

#### 7.6.1.7 AES encryption

The AES encryption algorithm used in this standard shall be performed as specified in NIST FIPS Pub 197 (see 2.4). This encryption algorithm is parameterized by the use of 128 bit block size; the key length selected shall be 128 bits.

#### 7.6.1.8 PIB security material

This subclause describes the formats of the security information stored in the MAC PIB. This information is dependent on the individual security suite selected and is referenced in this clause.

The symmetric key is the AES key for this ACL entry that shall be used to perform exactly one of (CTR encryption) or (CCM encryption and authentication) or (CBC-MAC authentication). An AES key shall not be used with different security suites.

The frame counter is the running counter that shall be included in the payload field in the MAC payload of the MAC frame. This counter is incremented each time a secure frame is transmitted, as specified in the ‘outgoing frame operations’ section in security suites that use frame counters. This counter will not roll over (see 7.6.1.3). This value helps to ensure that the CCM nonce is unique and allows the recipient to use the counter to ensure freshness.

The key sequence counter is a counter that is fixed by the higher layer and that shall be included in the payload field in the MAC payload of the MAC frame. The key sequence counter can be used, for instance, if the frame counter is exhausted. This value helps to ensures that the CCM nonce is unique and allows the recipient to use the counter to ensure freshness. If freshness is used, the higher layer should not decrease this counter as the freshness operation on the recipient side would fail.

The optional external frame counter and optional external key sequence counter are fields that may be stored in the ACL entry that represent the values of the last received frame counter and key sequence counter, respectively, in secure frames corresponding to this ACL entry. If the optional external frame counter and optional external key sequence counter fields are included in the ACL entry, the MAC will use them to verify the sequential freshness of received secure frames as described in the ‘incoming frame operations’ section in security suites that use frame counters.

### 7.6.2 AES-CTR security suite

The AES-CTR security suite is used when a device is operating in secured mode. The cryptographic operations in this security suite consist of performing AES-CTR encryption (or decryption) on the payload field within the MAC payload using shared data, the frame counter, and the key sequence counter.

The AES-CTR security suite provides the following security services:

Copyright © 2003 IEEE. All rights reserved.

Authorized licensed use limited to: IEEE - Staff. Downloaded on October 28,2024 at 20:20:02 UTC from IEEE Xplore. Restrictions apply.

INTEL-1011
U.S. Patent 8,219,129

— Access control, defined in 5.4.6.1.1
— Data encryption, defined in 5.4.6.1.2
— Sequential freshness, defined in 5.4.6.1.4 (optional)

### 7.6.2.1 Data formats

The data formats used in the AES-CTR security suite are defined in 7.6.2.1.1 through 7.6.2.1.3.

#### 7.6.2.1.1 MAC PIB formats

For the AES-CTR security suite, the security material stored in *macDefaultSecurityMaterial* or the ACL-SecurityMaterial field in the ACL consists of a symmetric key, a frame counter, and a key sequence counter as well as an optional frame counter and sequence counter that may be used for incoming frames. If these optional fields are included in the security material, the optional operations specified in 7.6.2.3.2 shall be performed. When these optional operations are performed, the security suite provides the sequential freshness security service on received frames. Figure 66 specifies the order and length of the AES-CTR security material components.

| **Octets: 16** | **4** | **1** | **(4)** | **(1)** |
|---|---|---|---|---|
| Symmetric key | Frame counter | Key sequence counter | Optional external frame counter | Optional external key sequence counter |

**Figure 66—AES-CTR security material**

#### 7.6.2.1.2 Protected payload field formats

In the AES-CTR security suite, the payload field in the MAC payload of a protected frame consists of the frame counter, the key sequence counter, and the encrypted payload. Figure 67 specifies the order and length of the subfields of the payload field of an AES-CTR secured frame. The length of the encrypted payload field is equal to the length of the payload field before it was encrypted.

| **Octets: 4** | **1** | **variable** |
|---|---|---|
| Frame counter | Key sequence counter | Encrypted payload |

**Figure 67—AES-CTR payload field**

#### 7.6.2.1.3 CTR input blocks

In the AES-CTR security suite, the input blocks to the CTR encryption function for generating the key stream consist of a flag octet, the address of the device sending the frame, the frame and key sequence counter values, and the block counter value. Figure 68 specifies the order and length of the subfields of the


Copyright © 2003 IEEE. All rights reserved.
Authorized licensed use limited to: IEEE - Staff. Downloaded on October 28,2024 at 20:20:02 UTC from IEEE Xplore. Restrictions apply.

INTEL-1011
U.S. Patent 8,219,129

CTR input blocks, the use of which is described in 7.6.2.3.1 and 7.6.2.3.2. These input blocks correspond to the counters $T_1$, $T_2$, ... , $T_n$ as specified in Annex Annex B.

| **Octets: 1** | **8** | **4** | **1** | **2** |
|---|---|---|---|---|
| Flags | Source address | Frame counter | Key sequence counter | Block counter |

**Figure 68—AES-CTR input block**

The flags octet used in AES-CTR mode, which is used as padding for the input block, is formatted as specified in Figure 69. The bit values in this flags octet are chosen simply to distinguish the AES-CTR flags from the AES-CCM flags (see Annex Annex B for information on the AES-CCM flags).

| **Bits: 7** | **6-2** | **1** | **0** |
|---|---|---|---|
| 1 | 0 | 1 | 0 |

**Figure 69—AES-CTR flags field**

### 7.6.2.2 Security parameters

The CTR encryption operation in AES-CTR security suite, as defined in 7.6.1.4, shall be parameterized by the following:

— The underlying block cipher shall be the AES encryption algorithm as specified in 7.6.1.7.
— The counter input blocks shall be formatted as specified in 7.6.2.1.3 where each input block is the same except that the block counter is set to 0 for the first block and is incremented as specified in 7.6.1.3 for each successive input block. In other words, the $i^{th}$ input block $T_i$ shall have the block counter value set to $i - 1$ (see Annex Annex B for further explanation).

### 7.6.2.3 Security operations

The operations performed on outgoing and incoming frames are specified in 7.6.2.3.1 and 7.6.2.3.2.

#### 7.6.2.3.1 Outgoing frame operations

When the AES-CTR security suite is invoked to protect an outgoing frame, the MAC sublayer shall perform the following operations:

a) Obtain its own 64 bit extended address, *aExtendedAddress*, along with the frame counter and the sequence counter from the MAC PIB, and construct the counter input blocks as specified in 7.6.2.2.
b) Encrypt the payload field in the MAC payload of the frame using CTR encryption, as specified in 7.6.1.4, with the parameters specified in 7.6.2.2, and using the counter input blocks from step a).
c) Combine the frame counter, sequence counter, and output from step b), as specified in 7.6.2.1.2, to obtain the new payload field.
d) Increment the frame counter as specified in 7.6.1.3 and, if the incrementing succeeds, insert the new counter value into the MAC PIB. If the incrementing operation fails because the counter value rolled over, the device shall abort the operation and issue the MLME-COMM-STATUS.indication primitive to the higher layer with a status of FAILED_SECURITY_CHECK.

Copyright © 2003 IEEE. All rights reserved.

Authorized licensed use limited to: IEEE - Staff. Downloaded on October 28,2024 at 20:20:02 UTC from IEEE Xplore. Restrictions apply.

INTEL-1011
U.S. Patent 8,219,129

#### 7.6.2.3.2 Incoming frame operations

When the AES-CTR security suite is invoked to protect an incoming frame, the MAC sublayer shall perform the following operations in order:

a) If the optional external frame and external key sequence counters are included in the corresponding *macDefaultSecurityMaterial* or ACLSecurityMaterial field, ensure sequential freshness by verifying that the received key sequence counter is greater than or equal to the external key sequence counter from that device. If the key sequence counter is greater than or equal to the external key sequence counter, verify that the received frame counter is greater than or equal to the external frame counter from that device. If either of these checks fails, the device shall reject the frame and issue the MLME-COMM-STATUS.indication primitive to the higher layer with a status of FAILED_SECURITY_CHECK.
b) Obtain the 64 bit extended address of the source either from the frame or from the ACL, extract the frame counter and sequence counter from the payload field in the MAC payload and construct the counter input blocks as specified in 7.6.2.2. If the nonce cannot be constructed because the data are unavailable, the device shall issue the MLME-COMM-STATUS.indication primitive to the higher layers with a status of FAILED_SECURITY_CHECK.
c) Decrypt the encrypted payload field using CTR decryption, as specified in 7.6.1.4, with the parameters specified in 7.6.2.2 and using the counter input blocks from step b).
d) Replace the existing payload field in the MAC payload with the decrypted data from step c). If the optional operation in step a) was performed and the checks succeeded, the last known sequence counter and last known frame counter shall be set to the received values.

### 7.6.3 AES-CCM security suite

The AES-CCM security suite is used when a device is operating in secured mode. The cryptographic operations in this security suite consist of performing AES-CCM authentication (or verification) on the MHR concatenated with the MAC payload and encryption (or decryption) on the payload field in the MHR using shared data, the frame counter, and the key sequence counter. The AES-CCM security suite shall be implemented using 32 bit, 64 bit, or 128 bit integrity codes.

The AES-CCM security suite provides the following security services:

— Access control, defined in 5.4.6.1.1
— Data encryption, defined in 5.4.6.1.2
— Frame integrity, defined in 5.4.6.1.3
— Sequential freshness, defined in 5.4.6.1.4 (optional)

#### 7.6.3.1 Data formats

The data formats used in the AES-CCM security suite are defined in 7.6.3.1.1 through 7.6.3.1.3.

#### 7.6.3.1.1 MAC PIB formats

For the AES-CCM security suite, the security material stored in *macDefaultSecurityMaterial* or the ACL-SecurityMaterial field in the ACL consists of a symmetric key, a frame counter, and a key sequence counter as well as an optional frame counter and sequence counter that may be used for incoming frames. If these optional fields are included in the security material, the optional operations specified in 7.6.3.3.2 shall be performed. When these optional operations are performed, the security suite provides the sequential


Copyright © 2003 IEEE. All rights reserved.
Authorized licensed use limited to: IEEE - Staff. Downloaded on October 28,2024 at 20:20:02 UTC from IEEE Xplore. Restrictions apply.

INTEL-1011
U.S. Patent 8,219,129

freshness security service on received frames. Figure 70 specifies the order and length of the AES-CCM security material components.

| Octets: 16 | 4 | 1 | (4) | (1) |
|---|---|---|---|---|
| Symmetric key | Frame counter | Key sequence counter | Optional external frame counter | Optional external key sequence counter |

**Figure 70—AES-CCM security material**

#### 7.6.3.1.2 Protected payload field formats

In the AES-CCM security suite, the payload field in the MAC payload of a protected frame consists of the frame counter, the key sequence counter, the encrypted payload, and the encrypted integrity code. Figure 71 specifies the order and length of the subfields of the payload field in the MAC payload of an AES-CCM secured frame. The length of the encrypted payload field is equal to the length of the payload field before it was encrypted. The length of the encrypted integrity code subfield corresponds to the length of integrity code required, i.e., 4 octets for 32 bit, 8 octets for 64 bit, or 16 octets for 128 bit.

| Octets: 4 | 1 | variable | 4, 8, or 16 |
|---|---|---|---|
| Frame counter | Key sequence counter | Encrypted payload | Encrypted integrity code |

**Figure 71—AES-CCM MAC payload field**

#### 7.6.3.1.3 CCM nonce

In the AES-CCM security suite, the nonce input used for the CCM authentication and encryption function consists of data explicitly included in the frame and data that both devices can independently obtain. Figure 72 specifies the order and length of the subfields of the CCM nonce.

| Octets: 8 | 4 | 1 |
|---|---|---|
| Source address | Frame counter | Key sequence counter |

**Figure 72—AES-CCM nonce**

### 7.6.3.2 Security parameters

In the AES-CCM security suite, the CCM operations as defined in 7.6.1.6 shall be parameterized by the following:

— The underlying block cipher shall be the AES encryption algorithm as specified in 7.6.1.7.
— The length in octets of the length field L shall be 2 octets.
— The length of the authentication field M shall be 4 octets, 8 octets, or 16 octets as required.
— The nonce shall be formatted as specified in 7.6.3.1.3.

Copyright © 2003 IEEE. All rights reserved.

Authorized licensed use limited to: IEEE - Staff. Downloaded on October 28,2024 at 20:20:02 UTC from IEEE Xplore. Restrictions apply.

INTEL-1011
U.S. Patent 8,219,129

#### 7.6.3.3 Security operations

The operations performed on outgoing and incoming frames are specified in 7.6.3.3.1 and 7.6.3.3.2.

##### 7.6.3.3.1 Outgoing frame operations

When the AES-CCM security suite is invoked to protect an outgoing frame, the MAC sublayer shall perform the following operations:

a) Obtain its own 64 bit extended address, *aExtendedAddress*, along with the frame counter and the sequence counter from the MAC PIB, and construct the nonce as specified in 7.6.3.1.3.
b) Encrypt and authenticate the MHR and MAC payload in the frame using CCM authentication and encryption, as specified in 7.6.1.6, with the parameters specified in 7.6.3.2. Use the MHR and nonpayload fields in the MAC payload as the authentication data, *a*; the payload field in the MAC payload as the message, *m*; and the nonce computed in step a).
c) Combine the frame counter, sequence counter, and output from step b) (including the encrypted payload and encrypted integrity code), as specified in 7.6.3.1.2, to obtain the new payload field.
d) Increment the frame counter as specified in 7.6.1.3 and, if the incrementing succeeds, insert the new counter value into the MAC PIB. If the incrementing operation fails because the counter value rolled over, the device shall abort the operation and issue the MLME-COMM-STATUS.indication primitive to the higher layer with a status of FAILED_SECURITY_CHECK.

##### 7.6.3.3.2 Incoming frame operations

When the AES-CCM security suite is invoked to protect an incoming frame, the MAC sublayer shall perform the following operations in order:

a) If the optional external frame and external key sequence counters are included in the corresponding *macDefaultSecurityMaterial* or ACLSecurityMaterial field, ensure sequential freshness by verifying that the received key sequence counter is greater than or equal to the external key sequence counter from that device. If the key sequence counter is equal to the external key sequence counter, verify that the received frame counter is greater than the external frame counter from that device. If either of these checks fails, the device shall reject the frame and issue the MLME-COMM-STATUS.indication primitive to the higher layer with a status of FAILED_SECURITY_CHECK.
b) Obtain the 64 bit extended address of the source either from the frame or from the ACL, remove the frame counter and sequence counter from the payload field in the MAC payload, and construct the nonce as specified in 7.6.3.1.3. If the nonce cannot be constructed because the data are unavailable, the device shall reject the frame and issue the MLME-COMM-STATUS.indication primitive to the higher layers with a status of FAILED_SECURITY_CHECK.
c) Decrypt the encrypted payload field and verify the integrity code using CCM decryption and authentication, as specified in 7.6.1.6, with the parameters specified in 7.6.3.2. Use the MHR and nonpayload fields in the MAC payload as the authentication data, *a*; the encrypted payload field as the message, *m*; and the nonce computed in step b). If the integrity code fails, the device shall discard the frame and issue the MLME-COMM-STATUS.indication primitive to the higher layers with a status of FAILED_SECURITY_CHECK.
d) Replace the existing payload field in the MAC payload with the decrypted data from step c). If the optional operation in step a) was performed and the checks succeeded, the last known sequence counter and last known frame counter shall be set to the received values.

### 7.6.4 AES-CBC-MAC security suite

The AES-CBC-MAC security suite is used when a device is operating in secured mode. The cryptographic operations in this security suite consist of performing AES-CBC-MAC authentication on the MHR and


Copyright © 2003 IEEE. All rights reserved.
Authorized licensed use limited to: IEEE - Staff. Downloaded on October 28,2024 at 20:20:02 UTC from IEEE Xplore. Restrictions apply.

INTEL-1011
U.S. Patent 8,219,129

MAC payload. The AES-CBC-MAC security suite shall be implemented using 32 bit, 64 bit or 128 bit integrity codes.

The AES-CBC-MAC security suite provides the following security services:

— Access control, defined in 5.4.6.1.1
— Frame integrity, defined in 5.4.6.1.3

### 7.6.4.1 Data formats

The data formats used in the AES-CBC-MAC security suite are defined in 7.6.4.1.1 through 7.6.4.1.3.

#### 7.6.4.1.1 MAC PIB formats

For the AES-CBC-MAC security suite, the security material stored in *macDefaultSecurityMaterial* or the ACLSecurityMaterial field in the ACL consists of a symmetric key. No state information is required between frames. Figure 73 specifies the order and length of the AES-CBC-MAC security material components.

| **Octets: 16** |
|---|
| Symmetric key |

**Figure 73—AES-CBC-MAC security material**

#### 7.6.4.1.2 Protected payload field formats

In the AES-CBC-MAC security suite, the payload field in the MAC payload of a protected frame consists of the existing payload followed by the integrity code. Figure 74 specifies the order and length of the subfields of the payload field in the MAC payload of an AES-CBC-MAC secured frame. The length of the integrity code subfield corresponds to the length of integrity code required, i.e., 4 octets for 32 bit, 8 octets for 64 bit or 16 octets for 128 bit.

| **Octets: variable** | **4, 8 or 16** |
|---|---|
| Payload | Integrity code |

**Figure 74—AES-CBC-MAC payload field**

#### 7.6.4.1.3 CBC-MAC input blocks

In the AES-CBC-MAC security suite, the input to the CBC-MAC authentication function for generating the integrity code consists of the length of the data to authenticate (not including the length field itself) followed by the MHR followed by the MAC payload. The input is broken up into 16 octet blocks starting from the left

Copyright © 2003 IEEE. All rights reserved.

Authorized licensed use limited to: IEEE - Staff. Downloaded on October 28,2024 at 20:20:02 UTC from IEEE Xplore. Restrictions apply.

INTEL-1011
U.S. Patent 8,219,129

and proceeding to the right until the last block, which may be smaller than 16 octets depending on the length of the total input. Figure 75 specifies the order and length of the subfields of the CBC-MAC input.

| **Octets: 1** | **variable = n** | **variable = m** |
|---|---|---|
| Length = $n + m$ | MHR | MAC payload |

**Figure 75—AES-CBC-MAC input**

### 7.6.4.2 Security parameters

In the AES-CBC-MAC security suite, the CBC-MAC operations as defined in 7.6.1.5 shall be parameterized by the following:

— The underlying block cipher shall be the AES encryption algorithm as specified in 7.6.1.7.
— The input to the CBC-MAC function shall be formatted as specified in 7.6.4.1.3.
— The length of the integrity code M shall be 32 bits, 64 bits, or 128 bits, as required.

### 7.6.4.3 Security operations

The operations performed on outgoing and incoming frames are specified in 7.6.4.3.1 and 7.6.4.3.2.

#### 7.6.4.3.1 Outgoing frame operations

When the AES-CBC-MAC security suite is invoked to protect an outgoing frame, the MAC sublayer shall perform the following operations:

a) Determine the length in octets of the MHR concatenated with the MAC payload (before the security operations are performed) and encode that length as a 1 octet integer, as specified in 7.6.1.3.
b) Compute the integrity code on the MHR and MAC payload in the frame using CBC-MAC authentication, as specified in 7.6.1.5, with the parameters specified in 7.6.4.2.
c) Combine the existing payload field in the MAC payload and output from step b), as specified in 7.6.4.1.2, to obtain the new payload field.

#### 7.6.4.3.2 Incoming frame operations

When the AES-CBC-MAC security suite is invoked to protect an incoming frame, the MAC sublayer shall perform the following operations:

a) Determine the length in octets of the MHR concatenated with the MAC payload, before the security operations were applied, and encode that length as a 1 octet integer as specified in 7.6.1.3.
b) Parse the payload field of the MAC payload into the payload and integrity code subfields, as specified in 7.6.4.1.2, and verify the integrity code using CBC-MAC authentication, as specified in 7.6.1.5, with the parameters specified in 7.6.4.2. Use the length determined in step a), the MHR from the received frame, and the MAC payload (without the integrity code) as the input data. If the integrity code fails, the device shall discard the frame and issue the MLME-COMM-STATUS.indication primitive to the higher layers with a status of FAILED_SECURITY_CHECK.
c) Remove the integrity code from the payload field in the MAC payload.


Copyright © 2003 IEEE. All rights reserved.
Authorized licensed use limited to: IEEE - Staff. Downloaded on October 28,2024 at 20:20:02 UTC from IEEE Xplore. Restrictions apply.

INTEL-1011
U.S. Patent 8,219,129

## 7.7 Message sequence charts illustrating MAC-PHY interaction

This subclause illustrates the main tasks specified in IEEE Std 802.15.4-2003. Each task is described by use of a message sequence chart to illustrate the chronological order, rather than the exact timing, of the primitives required for each task.

The primitives necessary for a PAN coordinator to start a new PAN are shown in Figure 76. The first action the next higher layer takes after resetting the MAC sublayer is to initiate a scan to search for other PANs in the area. The scan in the message sequence chart refers to Figure 77, which shows the steps for performing an ED scan. An active scan can also be used to search the area for neighboring PANs, but is not shown here.

Once a new PAN is established, the PAN coordinator is ready to accept requests from other devices to join the PAN. Figure 78 shows the primitives issued by the device requesting association, while Figure 79 illustrates the steps taken by the PAN coordinator allowing association. In the process of joining a PAN, the device requesting association will perform either an active or a passive scan to determine which PANs in the area are allowing association; Figure 80 details the primitives necessary to complete a passive scan. The association procedure also applies to devices joining the PAN through a coordinator that is not the central PAN coordinator (see Clause 3 for definitions of both coordinator and PAN coordinator).

The primitives necessary for transmitting and receiving a single data packet are shown next. The actions taken by the originator of the packet are shown in Figure 81, while the actions taken by the recipient are shown in Figure 82.

Copyright © 2003 IEEE. All rights reserved.

Authorized licensed use limited to: IEEE - Staff. Downloaded on October 28,2024 at 20:20:02 UTC from IEEE Xplore. Restrictions apply.

INTEL-1011
U.S. Patent 8,219,129

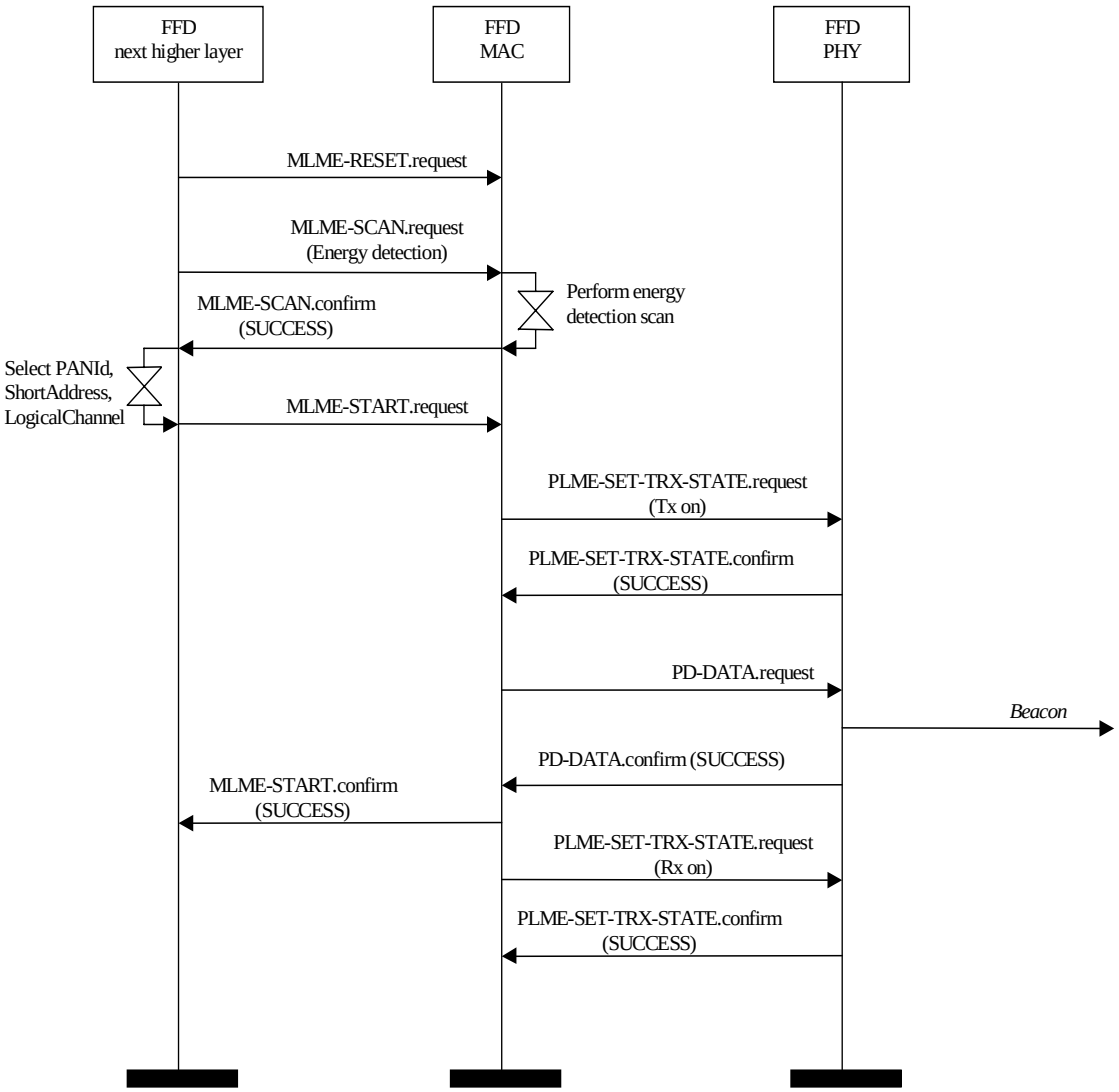


**Figure 76—PAN start message sequence chart—PAN coordinator**


Copyright © 2003 IEEE. All rights reserved.
Authorized licensed use limited to: IEEE - Staff. Downloaded on October 28,2024 at 20:20:02 UTC from IEEE Xplore. Restrictions apply.

INTEL-1011
U.S. Patent 8,219,129

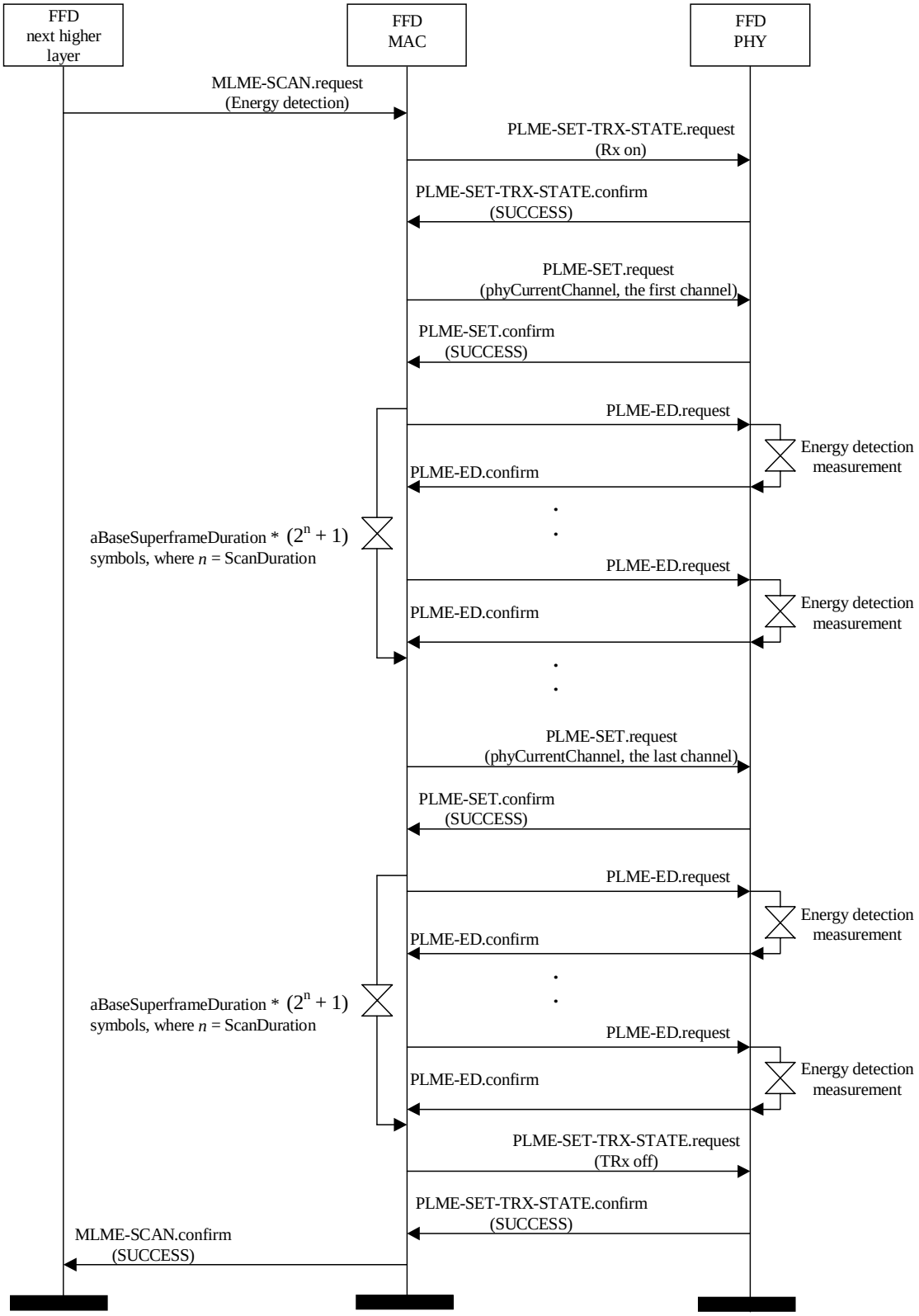


**Figure 77—ED scan message sequence chart**

Copyright © 2003 IEEE. All rights reserved.

Authorized licensed use limited to: IEEE - Staff. Downloaded on October 28,2024 at 20:20:02 UTC from IEEE Xplore. Restrictions apply.

INTEL-1011
U.S. Patent 8,219,129

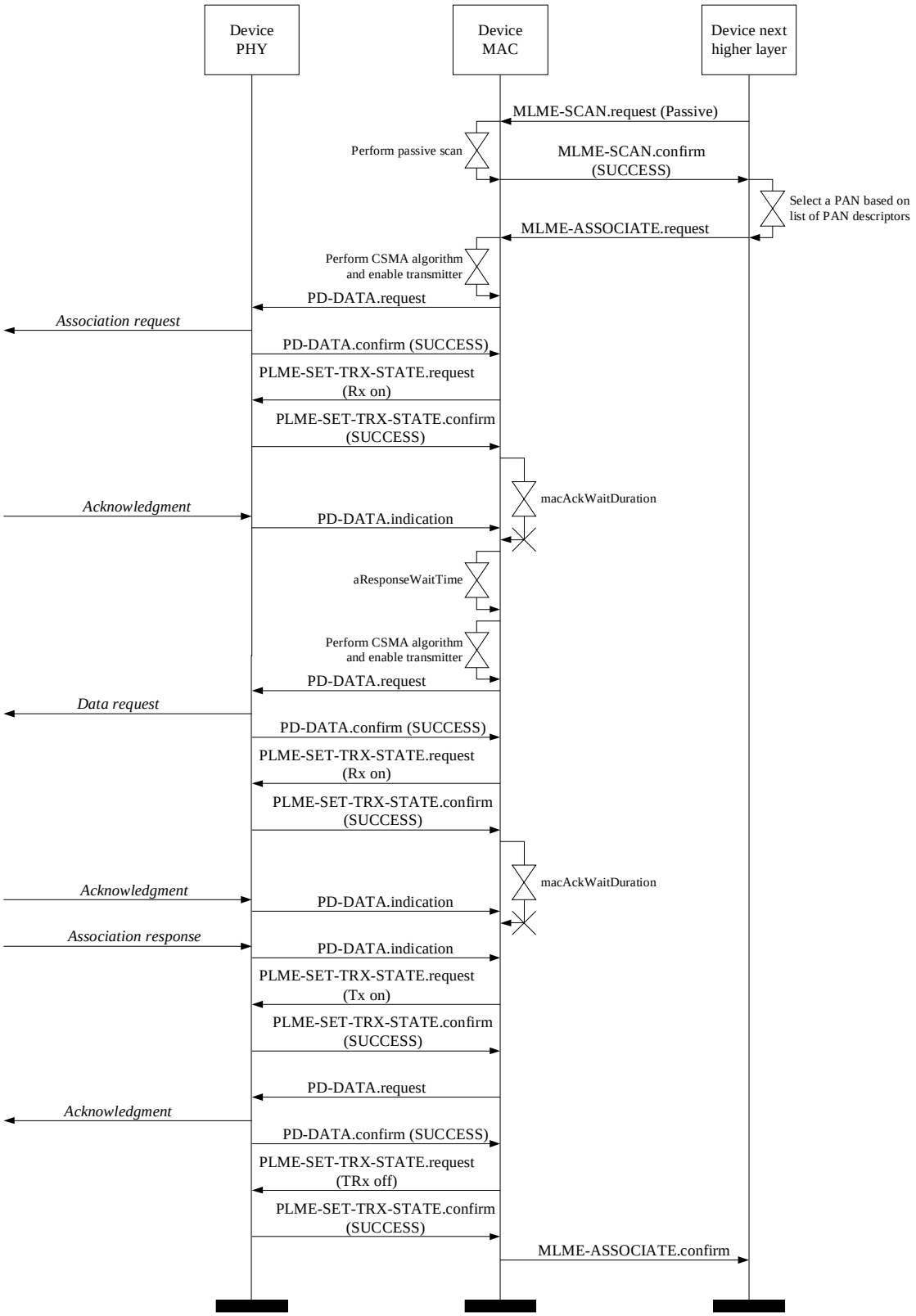


**Figure 78—Association message sequence chart—device**


Copyright © 2003 IEEE. All rights reserved.
Authorized licensed use limited to: IEEE - Staff. Downloaded on October 28,2024 at 20:20:02 UTC from IEEE Xplore. Restrictions apply.

INTEL-1011
U.S. Patent 8,219,129

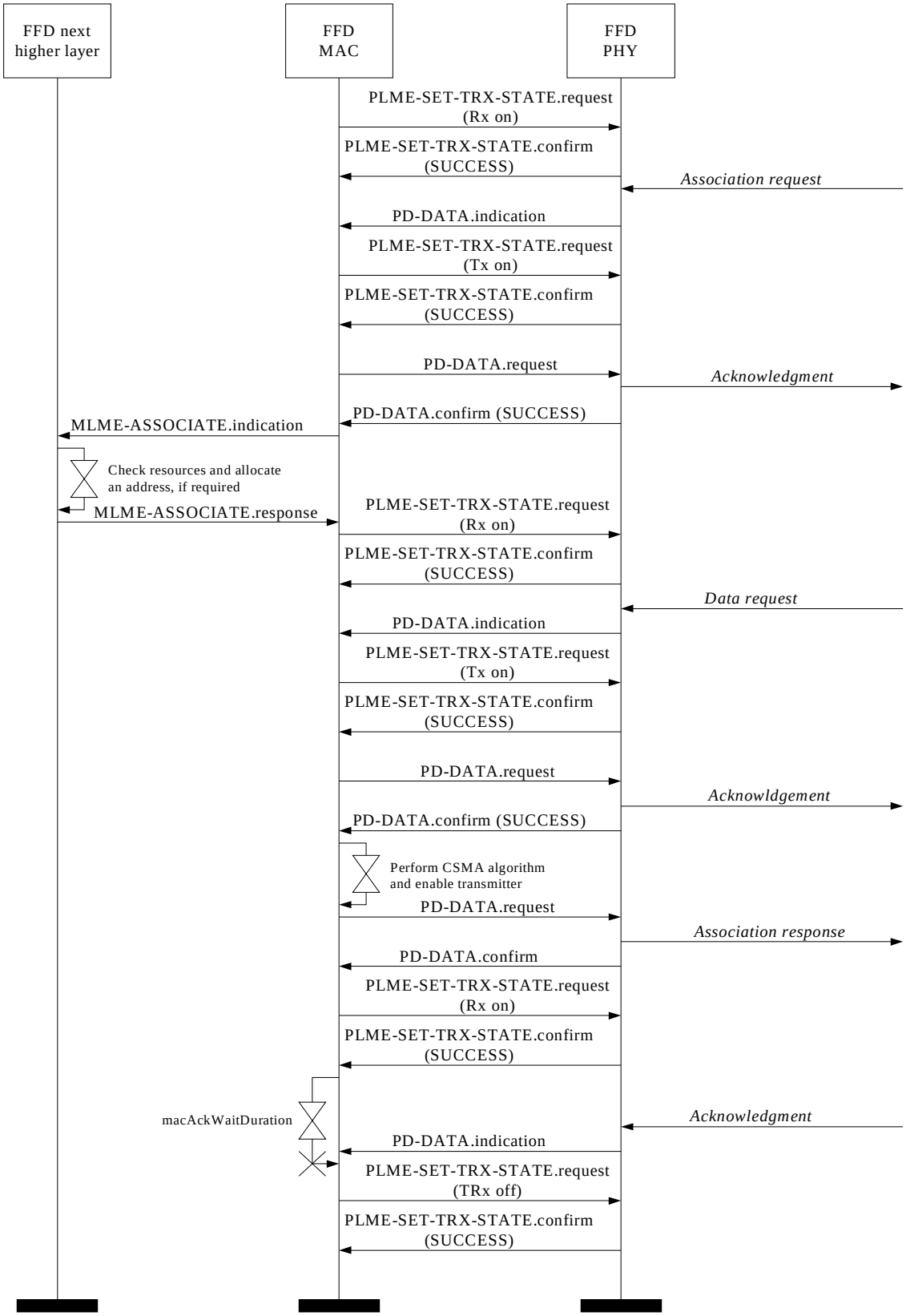


**Figure 79—Association message sequence chart—coordinator**

Copyright © 2003 IEEE. All rights reserved.

Authorized licensed use limited to: IEEE - Staff. Downloaded on October 28,2024 at 20:20:02 UTC from IEEE Xplore. Restrictions apply.

INTEL-1011
U.S. Patent 8,219,129

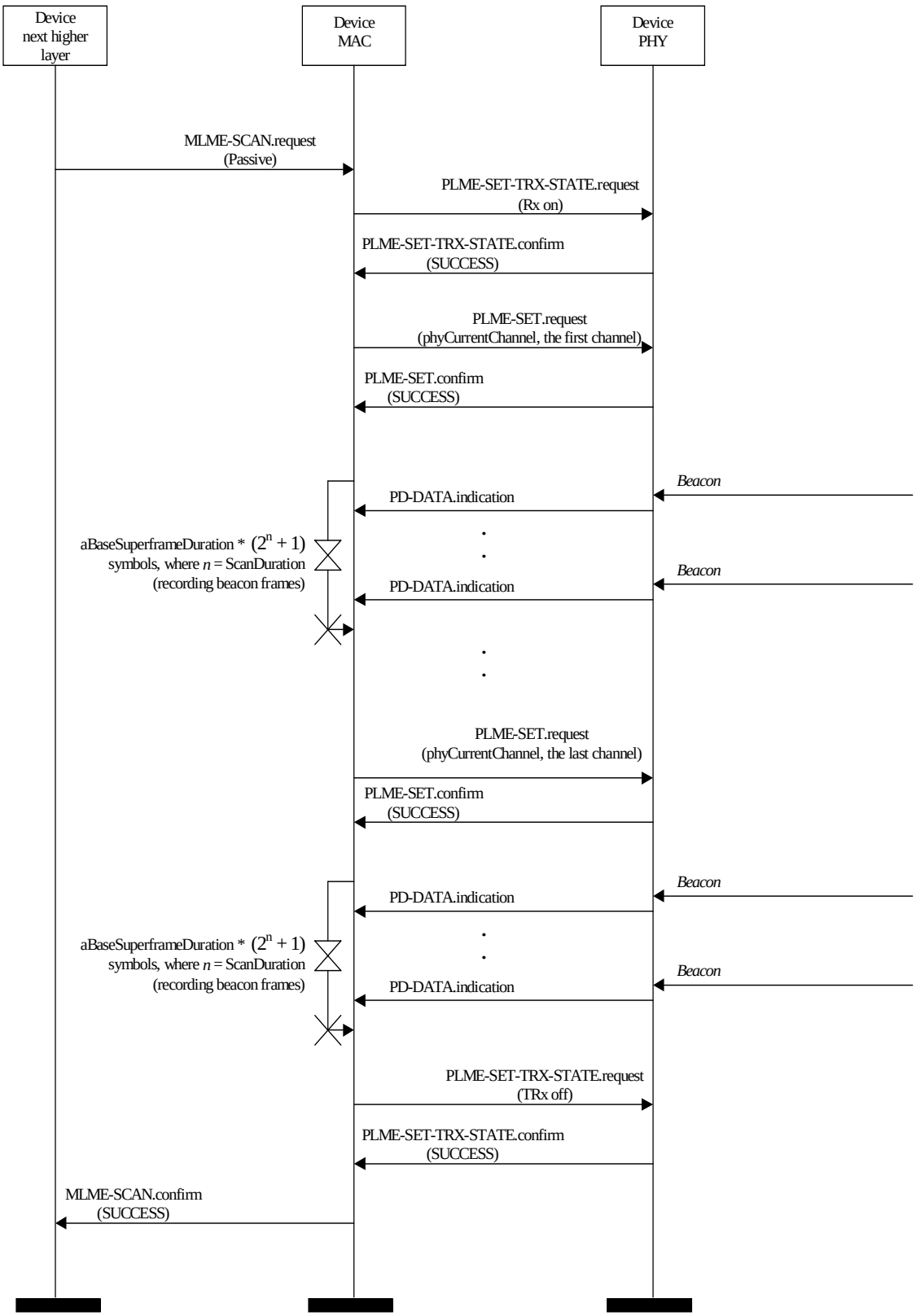


**Figure 80—Passive scan message sequence chart**


Copyright © 2003 IEEE. All rights reserved.
Authorized licensed use limited to: IEEE - Staff. Downloaded on October 28,2024 at 20:20:02 UTC from IEEE Xplore. Restrictions apply.

INTEL-1011
U.S. Patent 8,219,129

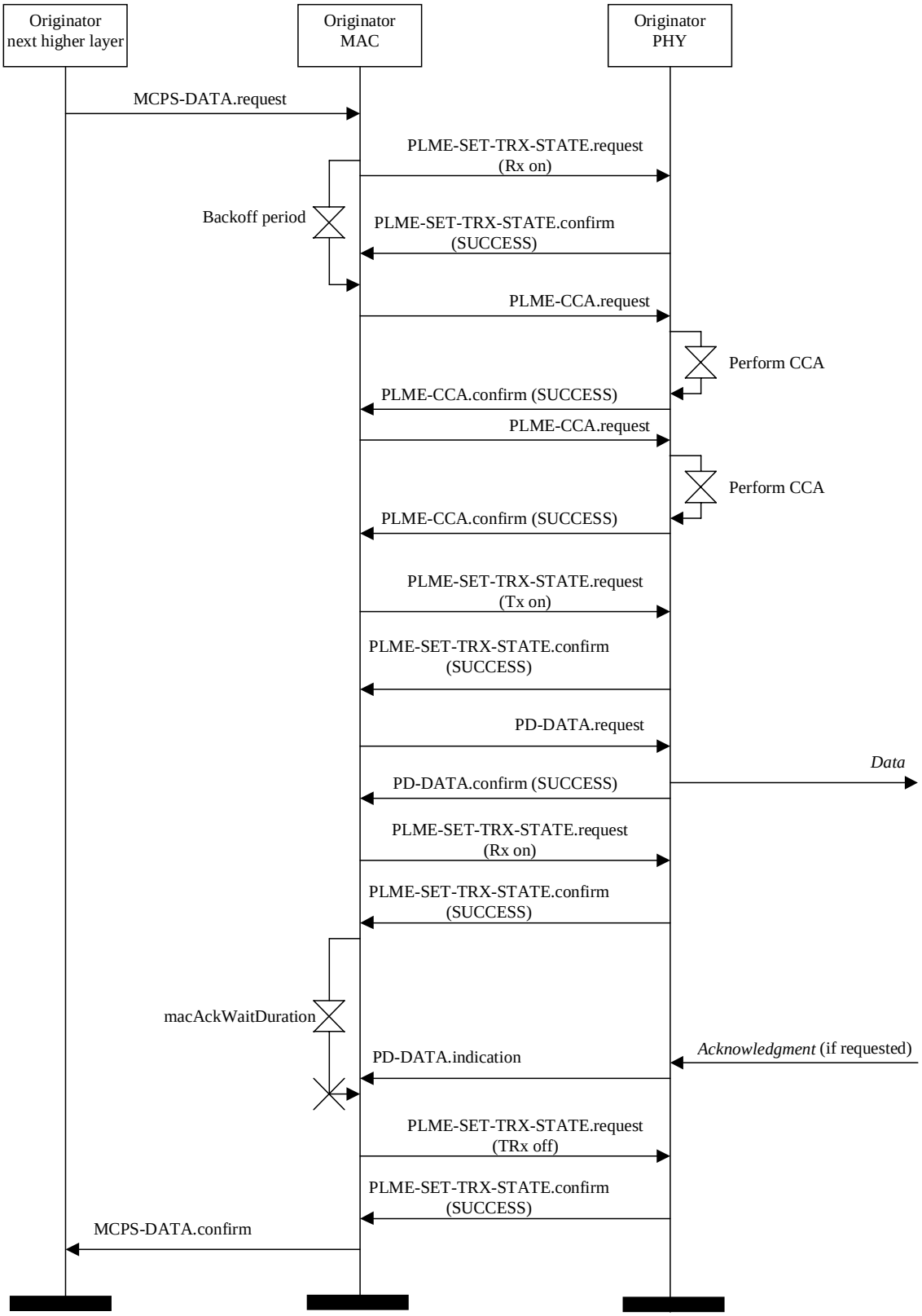


**Figure 81—Data transmission message sequence chart—originator**

Copyright © 2003 IEEE. All rights reserved.

Authorized licensed use limited to: IEEE - Staff. Downloaded on October 28,2024 at 20:20:02 UTC from IEEE Xplore. Restrictions apply.

INTEL-1011
U.S. Patent 8,219,129

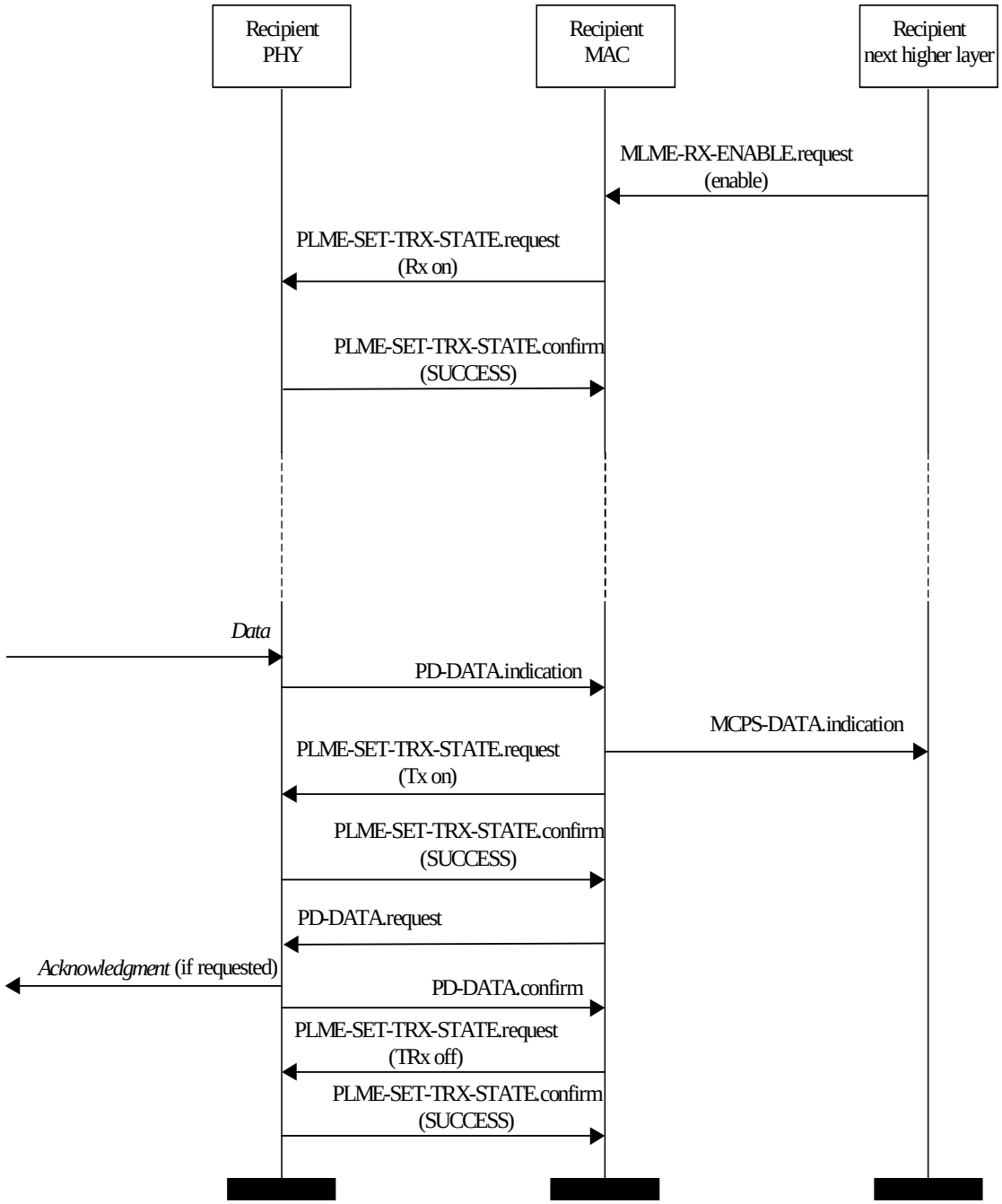


**Figure 82—Data transmission message sequence chart—recipient**


Copyright © 2003 IEEE. All rights reserved.
Authorized licensed use limited to: IEEE - Staff. Downloaded on October 28,2024 at 20:20:02 UTC from IEEE Xplore. Restrictions apply.

**INTEL-1011**
**U.S. Patent 8,219,129**

# Annex A

(normative)

# SSCS

The SSCS exists conceptually above the MCPS.

## A.1 802.2 Convergence sublayer

The 802.2 convergence sublayer exists above the IEEE 802.15.4 MCPS. This sublayer provides an interface between an instance of an IEEE 802.2 LLC sublayer and the IEEE 802.15.4 MCPS.

### A.1.1 MA-UNITDATA.request

The MA-UNITDATA.request primitive requests the transfer of a LLC protocol data unit (LPDU) (i.e., MSDU) from a local IEEE 802.2 Type 1 LLC sublayer entity to a single peer IEEE 802.2 Type 1 LLC sublayer entity or multiple peer IEEE 802.2 Type 1 LLC sublayer entities in the case of a group address.

#### A.1.1.1 Semantics of the service primitive

The semantics of the MA-UNITDATA.request primitive is as follows:

```
MA-UNITDATA.request        (
                           SrcAddr,
                           DstAddr,
                           RoutingInformation,
                           data,
                           priority,
                           ServiceClass
                           )
```

Table A.1 specifies the parameters for the MA-UNITDATA.request primitive.

**Table A.1—MA-UNITDATA.request parameters**

| Name | Type | Valid range | Description |
|---|---|---|---|
| SrcAddr | IEEE address | Any valid IEEE address | The individual IEEE address of the entity from which the MSDU is being transferred. |
| DstAddr | IEEE address | Any valid IEEE address | The individual IEEE address of the entity to which the MSDU is being transferred. |
| RoutingInformation | — | null | This parameter is not used by the MAC sublayer and shall be specified as a null value. |
| data | Set of octets | — | The set of octets forming the MSDU to be transmitted by the MAC sublayer entity. |

Copyright © 2003 IEEE. All rights reserved.

Authorized licensed use limited to: IEEE - Staff. Downloaded on October 28,2024 at 20:20:02 UTC from IEEE Xplore. Restrictions apply.

INTEL-1011
U.S. Patent 8,219,129

**Table A.1—MA-UNITDATA.request parameters *(continued)***

| Name | Type | Valid range | Description |
|---|---|---|---|
| priority | — | null | This parameter is not used by the MAC sublayer and shall be specified as a null value. |
| ServiceClass | — | null | This parameter is not used by the MAC sublayer and shall be specified as a null value. |

#### A.1.1.2 When generated

The MA-UNITDATA.request primitive is generated by a local IEEE 802.2 Type 1 LLC sublayer entity when an LPDU (MSDU) is to be transferred to a peer IEEE 802.2 Type 1 LLC sublayer entity or entities.

#### A.1.1.3 Effect on receipt

On receipt of the MA-UNITDATA.request primitive, the MAC sublayer entity shall begin the transmission of the supplied MSDU.

The MAC sublayer first builds an MPDU to transmit from the supplied arguments. The MPDU shall be transmitted using the CSMA-CA algorithm in the contention period of the frame and without requesting a handshake.

If the CSMA-CA algorithm indicates a busy channel, the MAC sublayer shall issue the MA-UNITDATA-STATUS.indication primitive with a status of CHANNEL_ACCESS_FAILURE. If the MPDU was successfully transmitted, the MAC sublayer shall issue the MA-UNITDATA-STATUS.indication primitive with a status of SUCCESS.

### A.1.2 MA-UNITDATA.indication

The MA-UNITDATA.indication primitive indicates the transfer of an LPDU (i.e., MSDU) from the MAC sublayer to the local IEEE 802.2 Type 1 LLC sublayer entity.

#### A.1.2.1 Semantics of the service primitive

The semantics of the MA-UNITDATA.indication primitive is as follows:

```
MA-UNITDATA.indication      (
                            SrcAddr,
                            DstAddr,
                            RoutingInformation,
                            data,
                            ReceptionStatus,
                            priority,
                            ServiceClass
                            )
```

Table A.2 specifies the parameters for the MA-UNITDATA.indication primitive.


Copyright © 2003 IEEE. All rights reserved.
Authorized licensed use limited to: IEEE - Staff. Downloaded on October 28,2024 at 20:20:02 UTC from IEEE Xplore. Restrictions apply.

**INTEL-1011**
**U.S. Patent 8,219,129**

**Table A.2—MA-UNITDATA.indication parameters**

| Name | Type | Valid range | Description |
|---|---|---|---|
| SrcAddr | IEEE address | Any valid IEEE address | The individual IEEE address of the entity from which the MSDU has been received |
| DstAddr | IEEE address | Any valid IEEE address | The individual IEEE address of the entity to which the MSDU is being transferred. |
| RoutingInformation | — | null | This parameter is not used by the MAC sublayer and shall be specified as a null value. |
| data | Set of octets | — | The set of octets forming the MSDU received by the MAC sublayer entity. |
| ReceptionStatus | — | null | This parameter is not used by the MAC sublayer and shall be specified as a null value. |
| priority | — | null | This parameter is not used by the MAC sublayer and shall be specified as a null value. |
| ServiceClass | — | null | This parameter is not used by the MAC sublayer and shall be specified as a null value. |

#### A.1.2.2 When generated

On receipt of a data packet at the local MAC sublayer entity, the FCS field is checked. If it is valid, the MAC sublayer shall issue the MA-UNITDATA.indication primitive to the IEEE 802.2 Type 1 LLC sublayer entity, indicating the arrival of a MSDU. If the FCS is not valid, the packet shall be discarded, and the IEEE 802.2 Type 1 LLC sublayer entity shall not be informed.

#### A.1.2.3 Effect on receipt

The effect on receipt of the MA-UNITDATA.indication primitive is not specified in this standard.

### A.1.3 MA-UNITDATA-STATUS.indication

The MA-UNITDATA-STATUS.indication primitive reports the results of a request to transfer a LPDU (MSDU) from a local IEEE 802.2 Type 1 LLC sublayer entity to a single peer IEEE 802.2 Type 1 LLC sublayer entity or to multiple peer IEEE 802.2 Type 1 LLC sublayer entities.

#### A.1.3.1 Semantics of the service primitive

The semantics of the MA-UNITDATA-STATUS.indication primitive is as follows:

```
MA-UNITDATA-STATUS.indication    (
                                 SrcAddr,
                                 DstAddr,
                                 status,
                                 ProvPriority,
                                 ProvServiceClass
                                 )
```

Table A.3 specifies the parameters for the MA-UNITDATA-STATUS.indication primitive.

Copyright © 2003 IEEE. All rights reserved.

Authorized licensed use limited to: IEEE - Staff. Downloaded on October 28,2024 at 20:20:02 UTC from IEEE Xplore. Restrictions apply.

INTEL-1011
U.S. Patent 8,219,129

**Table A.3—MA-UNITDATA-STATUS.indication parameters**

| Name | Type | Valid Range | Description |
|---|---|---|---|
| SrcAddr | IEEE address | Any valid IEEE address | The individual IEEE address of the entity from which the MSDU has been transferred. |
| DstAddr | IEEE address | Any valid IEEE address | The individual IEEE address of the entity to which the MSDU has been transferred. |
| status | Enumeration | SUCCESS, TRANSMISSION_PENDING, NO_BEACON, or CHANNEL_ACCESS_FAILURE | The status of the last MSDU transmission. |
| ProvPriority | — | null | This parameter is not used by the MAC sublayer and shall be specified as a null value. |
| ProvServiceClass | — | null | This parameter is not used by the MAC sublayer and shall be specified as a null value. |

### A.1.3.2 When generated

The MA-UNITDATA-STATUS.indication primitive is generated by the MAC sublayer entity in response to an MA-UNITDATA.request primitive issued by the IEEE 802.2 Type 1 LLC sublayer.

### A.1.3.3 Effect on receipt

The receipt of the MA-UNITDATA-STATUS.indication primitive by the IEEE 802.2 Type 1 LLC sublayer entity signals the completion of the current data transmission.


Copyright © 2003 IEEE. All rights reserved.
Authorized licensed use limited to: IEEE - Staff. Downloaded on October 28,2024 at 20:20:02 UTC from IEEE Xplore. Restrictions apply.

INTEL-1011
U.S. Patent 8,219,129

# Annex B

(normative)

# Security implementation

## B.1 Generic CCM mode

CCM is a generic authenticate-and-encrypt block cipher mode. CCM is currently defined for use only with block ciphers with a 128 bit block size, such as AES. The CCM ideas can easily be extended to other block sizes, but the ideas will require further definitions.

For the generic CCM mode, there are two parameter choices to be made. The first choice is *M*, the size of the authentication field. The choice of the value for *M* involves a trade-off between message expansion and the probability that an attacker can undetectably modify a message. Valid values are 4, 6, 8, 10, 12, 14, and 16 octets. The second choice is *L*, the size of the length field. This value requires a trade-off between the maximum message size and the size of the nonce. Different applications require different trade-offs, so *L* is a parameter. Valid values are 2 to 8 octets (the value $L = 1$ is reserved). Table B.1 shows the CCM mode parameters.

**Table B.1—Parameters of CCM mode**

| Name | Description | Field size | Encoding of field |
|---|---|---|---|
| M | Number of octets in authentication field | 3 bits | $(M - )/2$ |
| L | Number of octets in length field | 3 bits | $L - 1$ |

### B.1.1 Inputs

To send a message, the sender must provide the following information:

— An encryption key *K* suitable for the block cipher.
— A nonce *N* of $15 - L$ octets. Within the scope of any encryption key *K*, the nonce value shall be unique. In other words, the set of nonce values used with any given key shall not contain any duplicate values. Using the same nonce for two different messages encrypted with the same key destroys the security properties of this mode.
— The message *m*, consisting of a string of $l(m)$ octets where $0 \le l(m) < 2^{8L}$. The length restriction ensures that $l(m)$ can be encoded in a field of *L* octets.
— Additional authenticated data *a*, consisting of a string of $l(a)$ octets where $0 \le l(a) < 2^{64}$. These additional data are authenticated, but not encrypted, and are not included in the output of this mode. They can be used to authenticate plaintext headers or contextual information that affects the interpretation of the message. Users who do not wish to authenticate additional data can provide a string of length zero.

This information is summarized in Table B.2.

Copyright © 2003 IEEE. All rights reserved.

Authorized licensed use limited to: IEEE - Staff. Downloaded on October 28,2024 at 20:20:02 UTC from IEEE Xplore. Restrictions apply.

INTEL-1011
U.S. Patent 8,219,129

**Table B.2—Inputs for CCM**

| Name | Description | Field size | Encoding of field |
|---|---|---|---|
| K | Block cipher key | Depends on block cipher | String of octets |
| N | Nonce | $15 - L$ octets | Not specified |
| m | Message to be encrypted and sent | $l(m)$ octets | String of octets |
| a | Additional authenticated data | $l(a)$ octets | String of octets |

### B.1.2 Authentication

The first step is to compute the authentication field $T$. This is done using CBC-MAC. First define a sequence of blocks $B_0$, $B_1$, ... $B_n$ and then apply CBC-MAC to these blocks.

The first block $B_0$ is formatted as indicated in Table B.3.

**Table B.3—First authentication block $B_0$**

| Octet no. | 0 | 1 ... $15 - L$ | $16 - L$ ... 15 |
|---|---|---|---|
| Contents | Flags | Nonce $N$ | $l(m)$ |

The value $l(m)$ is encoded in most-significant-octet-first order.

The flags field is formatted as indicated in Table B.4.

**Table B.4—Authentication flags octet**

| Bit no. | 7 | 6 | 5 | 4 | 3 | 2 | 1 | 0 |
|---|---|---|---|---|---|---|---|---|
| Contents | Reserved | Adata | M | | | L | | |

The reserved bit is reserved for future expansions and should always be set to 0. The Adata bit is set to 0 if $l(a) = 0$ and set to 1 if $l(a) > 0$. The $M$ field is assigned the value of 4*(bit 5) + 2*(bit 4) + (bit 3) and encodes the value of $M$ as $(M - 2)/2$. As $M$ can take on the even values from 4 to 16, the 3 bit field can take on the values from 1 to 7. The $L$ field is assigned the value of 4*(bit 2) + 2*(bit 1) + (bit 0) and encodes the size of the length field used to store $l(m)$. The parameter $L$ can take on the values from 2 to 8 (the value $L = 1$ is reserved). This value is encoded in the 3 bit field using the values from 1 to 7 by choosing the field value as $L - 1$ (the zero value is reserved).

If $l(a) > 0$ (as indicated by the Adata field), then one or more blocks of authentication data are added. These blocks contain $l(a)$ and $a$ encoded in a reversible manner. First construct a string that encodes $l(a)$.

If $0 < l(a) < 2^{16}-2^8$ then the length field is encoded as 2 octets, which contain the value $l(a)$ in most-significant-octet-first order.


Copyright © 2003 IEEE. All rights reserved.
Authorized licensed use limited to: IEEE - Staff. Downloaded on October 28,2024 at 20:20:02 UTC from IEEE Xplore. Restrictions apply.

INTEL-1011
U.S. Patent 8,219,129

If $2^{16} - 2^8 \le l(a) < 2^{32}$, then the length field is encoded as 6 octets consisting of the octets 0 x ff, 0 x fe, and 4 octets encoding $l(a)$ in most-significant-octet-first order.

If $2^{32} \le l(a) < 2^{64}$, then the length field is encoded as 10 octets consisting of the octets 0 x ff, 0 x ff, and 8 octets encoding $l(a)$ in most-significant-octet-first order.

This information is summarized in Table B.5. Note that all fields are interpreted in most-significant-octet-first order.

**Table B.5—Length encoding for additional authentication data**

| First two octets | Followed by | Comment |
|---|---|---|
| 0 x 0000 | | Reserved |
| 0 x 0001 ... 0 x FEFF | | For $0 < l(a) < 2^{16} - 2^8$ |
| 0 x FF00 ... 0 x FFFD | | Reserved |
| 0 x FFFE | 4 octets *l(a)* | For $2^{16} - 2^8 \le l(a) < 2^{32}$ |
| 0 x FFFF | 8 octets *l(a)* | For $2^{32} \le l(a) < 2^{64}$ |

The blocks encoding $a$ are formed by concatenating the string that encodes $l(a)$ with $a$ itself and splitting the result into 16 octet blocks, padding the last block with zeroes if necessary. These blocks are appended to the first block $B_0$.

After the (optional) additional authentication blocks have been added, add the message blocks. The message blocks are formed by splitting the message $m$ into 16 octet blocks, padding the last block with zeroes if necessary. If the message $m$ consists of the empty string, then no blocks are added in this step.

The result is a sequence of blocks $B_0, B_1, ..., B_n$. The CBC-MAC is now computed by

$$X_1 := \mathrm{E}(\, K, B_0 \,)$$

$$X_{i+1} := \mathrm{E}(\, K, X_i \oplus B_i \,) \quad \text{for } i = 1, \ldots, n$$

$$T := \text{first-}M\text{-octets}(\, X_{n+1} \,)$$

where

E() is the block cipher encryption function,
$T$ is the MAC value.

Note that the last block $B_n$ is XORed with $X_n$ and encrypted with the block cipher to give $T$.

### B.1.3 Encryption

To encrypt the message data, use CTR mode. First define the key stream blocks by

$$S_i := \mathrm{E}(\, K, A_i \,) \quad \text{for } i = 0, 1, 2, \ldots .$$

Copyright © 2003 IEEE. All rights reserved.

Authorized licensed use limited to: IEEE - Staff. Downloaded on October 28,2024 at 20:20:02 UTC from IEEE Xplore. Restrictions apply.

INTEL-1011
U.S. Patent 8,219,129

The values $A_i$ are formatted as shown in Table B.6.

**Table B.6—Encryption blocks $A_i$**

| **Octet no.** | 0 | 1 ... 15 – $L$ | 16 – $L$ ... 15 |
|---|---|---|---|
| **Contents** | Flags | Nonce $N$ | Counter $i$ |

where $i$ is encoded in most-significant-octet-first order.

The flags field is formatted as shown in Table B.7.

**Table B.7—Encryption flags octet**

| **Bit no.** | 7 | 6 | 5 | 4 | 3 | 2 | 1 | 0 |
|---|---|---|---|---|---|---|---|---|
| **Contents** | Reserved | Reserved | 0 | | | L | | |

The reserved bits are reserved for future expansions and shall be set to 0. Bit 6 corresponds to the Adata bit in the $B_0$ block, but as this bit is not used here, it is reserved. Bit 3, bit 4, and bit 5 are set to 0. This ensures that all the $A$ blocks are distinct from $B_0$, which has the nonzero encoding of $M$ in this position. Bit 0, bit 1, and bit 2 contain $L$, using the same encoding as in $B_0$.

The message is encrypted by XORing the octets of message $m$ with the first $l(m)$ octets of the concatenation of $S_1$, $S_2$, $S_3$, ... . Note that $S_0$ is not used to encrypt the message.

The authentication value $U$ is computed by encrypting $T$ with the key stream block $S_0$ and truncating it to the desired length.

$$U := T \oplus \text{first-}M\text{-octets}(S_0)$$

### B.1.4 Output

The final result $c$ consists of the encrypted message $m$, followed by the encrypted authentication value $U$.

### B.1.5 Decryption

To decrypt a message, the following information is required:

— The encryption key $K$.
— The nonce $N$.
— The additional authenticated data $a$.
— The encrypted and authenticated message $c$.

Decryption starts by recomputing the key stream to recover the message $m$ and the MAC value $T$. The message and additional authentication data is then used to recompute the CBC-MAC value and check $T$.


Copyright © 2003 IEEE. All rights reserved.
Authorized licensed use limited to: IEEE - Staff. Downloaded on October 28,2024 at 20:20:02 UTC from IEEE Xplore. Restrictions apply.

INTEL-1011
U.S. Patent 8,219,129

If the *T* value is not correct, the receiver shall not reveal any information except for the fact that *T* is incorrect. In particular, the receiver shall not reveal the decrypted message, the value *T*, or any other information.

### B.1.6 Restrictions

All implementations shall limit the total amount of data that are encrypted with a single key. The sender shall ensure that the total number of block cipher encryption operations in the CBC-MAC and encryption together shall not exceed $2^{61}$. (This allows close to $2^{64}$ octets to be encrypted and authenticated using CCM, which should be more than enough for most applications.) Receivers that do not expect to decrypt the same message twice may also implement this limit.

The receiver shall verify the CBC-MAC before releasing any information such as the plaintext. If the CBC-MAC verification fails, the receiver shall destroy all information, except for the fact that the CBC-MAC verification failed

### B.1.7 List of symbols

Table B.8 provides a list of the symbols used for the specification of CCM.

**Table B.8—List of symbols**

| Name | Description | Size | Comment |
|---|---|---|---|
| a | Additional authenticated data | $l(a)$ octets | Use empty string if not desired. |
| $A_i$ | Counter block to generate key stream | 16 octets | Contains block counter, nonce, and flags. |
| $B_i$ | Input block for CBC-MAC | 16 octets | Encode *N*, *L*, *M*, *m*, and *a* uniquely. |
| c | Ciphertext | $l(m) + M$ octets | Includes the encrypted MAC. |
| K | Block cipher key | N/A | At least 128 bits, preferably 256 bits. |
| L | Number of octets in length field | 3 bits | Values 1 ... 8, encoded in 3 bits as $L - 1$. |
| m | Message to be encrypted and sent | $l(m)$ octets | Subject to $0 \le l(m) < 2^{8L}$ |
| M | Number of octets in authentication field | 3 bits | Values 4, 6, 8, ..., 16. Encoded value is $(M - 2)/2$ |
| N | Nonce | $15 - L$ octets | Nonce should never be repeated for same key. |
| $S_i$ | Block of the encryption key stream | 16 octets | Use $S_0$, $S_1$, $S_2$, ... to encrypt *m* and *T*. |
| T | Unencrypted authentication tag | *M* octets | |
| U | Encrypted authentication tag | *M* octets | Appended to the message after encryption |
| $X_i$ | Intermediate value of CBC-MAC | 16 octets | |

Copyright © 2003 IEEE. All rights reserved.

Authorized licensed use limited to: IEEE - Staff. Downloaded on October 28,2024 at 20:20:02 UTC from IEEE Xplore. Restrictions apply.

INTEL-1011
U.S. Patent 8,219,129

## B.2 CTR Encryption

The CTR is a confidentiality mode that features the application of the forward cipher to a set of input blocks, called counters, to produce a sequence of output blocks that are XORed with the plaintext to produce the ciphertext, and vice versa. The sequence of counters must have the property that each block in the sequence is different from every other block. This condition is not restricted to a single message: across all of the messages that are encrypted under the given key, all of the counters must be distinct. In this standard, the counters for a given message are denoted $T_1, T_2, \ldots, T_n$. Given a sequence of counters, $T_1, T_2, \ldots, T_n$, the CTR mode is defined as follows:

CTR encryption: $O_j = CIPH_K(T_j)$ for $j = 1, 2 \ldots n$;
$C_j = P_j \oplus O_j$ for $j = 1, 2 \ldots n - 1$;
$C^*_n = P^*_n \oplus MSB_u(O_n)$.

CTR decryption: $O_j = CIPH_K(T_j)$ for $j = 1, 2 \ldots n$;
$P_j = C_j \oplus O_j$ for $j = 1, 2 \ldots n - 1$;
$P^*_n = C^*_n \oplus MSB_u(O_n)$.

In CTR encryption, the forward cipher function is invoked on each counter block, and the resulting output blocks are XORed with the corresponding plaintext blocks to produce the ciphertext blocks. For the last block, which may be a partial block of $u$ bits, the most significant $u$ bits of the last output block are used for the XOR operation. The remaining $b - u$ bits of the last output block are discarded, where $b$ is the length in bits of the block cipher.

In CTR decryption, the forward cipher function is invoked on each counter block, and the resulting output blocks are XORed with the corresponding ciphertext blocks to recover the plaintext blocks. For the last block, which may be a partial block of $u$ bits, the most significant $u$ bits of the last output block are used for the XOR operation. The remaining $b - u$ bits of the last output block are discarded.

In both CTR encryption and CTR decryption, the forward cipher functions can be performed in parallel. Similarly, the plaintext block that corresponds to any particular ciphertext block can be recovered independently from the other plaintext blocks if the corresponding counter block can be determined. Moreover, the forward cipher functions can be applied to the counters prior to the availability of the plaintext or ciphertext data.


Copyright © 2003 IEEE. All rights reserved.
Authorized licensed use limited to: IEEE - Staff. Downloaded on October 28,2024 at 20:20:02 UTC from IEEE Xplore. Restrictions apply.

INTEL-1011
U.S. Patent 8,219,129

The CTR mode is illustrated in Figure B.1.

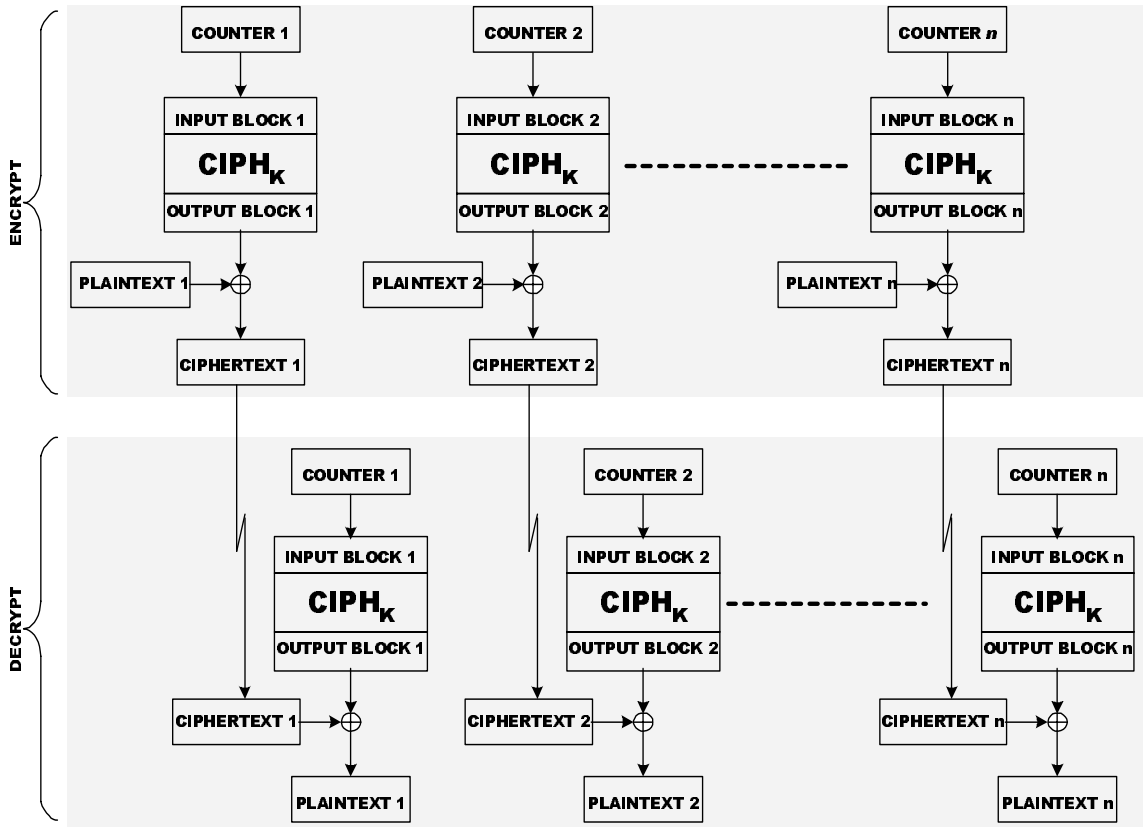


**Figure B.1—CTR mode**

## B.3 CBC-MAC

The CBC-MAC algorithm makes use of an underlying block cipher to provide data integrity on input data. The block cipher transforms (or encrypts) input vectors of the block size to output vectors of the block size using a cryptographic key. Let $D$ be any input vector and assume a key has been selected. The vector of length equal to the block size, $O$, which is the output of the block cipher when applied to $D$, using the enciphering operation, is represented as follows:

$$O = \mathrm{e}(D)$$

The data (e.g., record, file, message, program) to be authenticated is grouped into contiguous blocks, $D_1$, $D_2$,.... $D_n$, each with length equal to the block size. If the number of data bits is not a multiple of the block size, then the final input block will be a partial block of data, left justified, with zeroes appended to form a full block. The calculation of the MIC is given by the following equations where ⊕ represents the XOR of two vectors.

Copyright © 2003 IEEE. All rights reserved.

Authorized licensed use limited to: IEEE - Staff. Downloaded on October 28,2024 at 20:20:02 UTC from IEEE Xplore. Restrictions apply.

INTEL-1011
U.S. Patent 8,219,129

$O_1 = e(D_1)$

$O_2 = e(D_2 \oplus O_1)$

$O_3 = e(D_3 \oplus O_2)$

. . .

$O_n = e(D_n \oplus O_{n-1})$

The MIC is selected from $O_n$. Devices that implement CBC-MAC shall be capable of selecting the leftmost $M$ bits of $O_n$ as the MIC, where $32 < M < 128$ and $M$ is a multiple of 8. A block diagram of the MIC generation is given in Figure B.2.

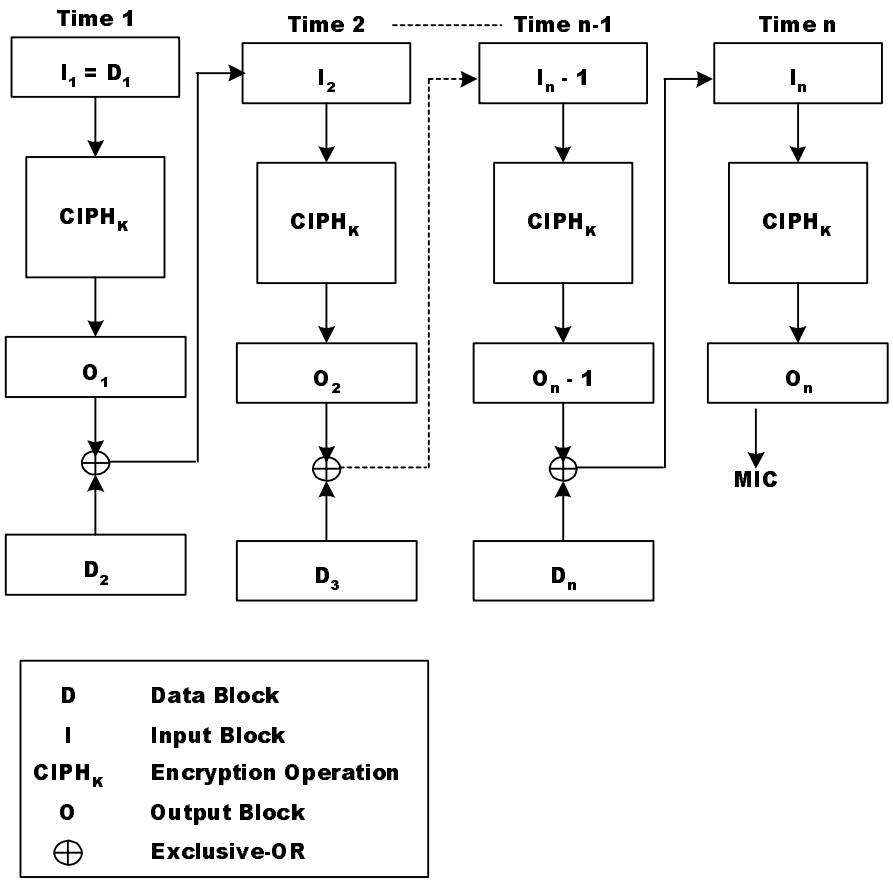


**Figure B.2— CBC-MAC**


Copyright © 2003 IEEE. All rights reserved.
Authorized licensed use limited to: IEEE - Staff. Downloaded on October 28,2024 at 20:20:02 UTC from IEEE Xplore. Restrictions apply.

INTEL-1011
U.S. Patent 8,219,129

# Annex C

(normative)

# Protocol implementation conformance statement (PICS) proforma[7]

## C.1 Introduction

To evaluate conformance of a particular implementation, it is necessary to have a statement of which capabilities and options have been implemented for a given standard. Such a statement is called a protocol implementation conformance statement (PICS).

### C.1.1 Scope

This annex provides the PICS proforma for IEEE Std 802.15.4-2003 in compliance with the relevant requirements, and in accordance with the relevant guidance, given in ISO/IEC 9646-7:1995.

### C.1.2 Purpose

The supplier of a protocol implementation claiming to conform to IEEE Std 802.15.4-2003 shall complete the following PICS proforma and accompany it with the information necessary to identify fully both the supplier and the implementation.

The PICS of a protocol implementation is a statement of which capabilities and options of the protocol have been implemented. The statement is in the form of answers to a set of questions in the PICS proforma. The questions in a proforma consist of a systematic list of protocol capabilities and options as well as their implementation requirements. The implementation requirement indicates whether implementation of a capability is mandatory, optional, or conditional depending on options selected. When a protocol implementor answers questions in a PICS proforma, the implementor indicates whether an item is implemented and provides explanations if an item is not implemented.

## C.2 Abbreviations and special symbols

Notations for requirement status:

| | |
|---|---|
| M | Mandatory |
| O | Optional |
| O.n | Optional, but support of at least one of the group of options labeled O.n is required. |
| N/A | Not applicable |
| X | Prohibited |
| “item”: | Conditional, status dependent upon the support marked for the “item” |

For example, FD1: O.1 indicates that the status is optional but at least one of the features described in FD1 and FD2 is required to be implemented, if this implementation is to follow the standard to which this PICS proforma is part.

[7]Copyright release for PICS proformas: Users of this standard may freely reproduce the PICS proforma in this annex so that it can be used for its intended purpose and may further publish the completed PICS.

Copyright © 2003 IEEE. All rights reserved.

Authorized licensed use limited to: IEEE - Staff. Downloaded on October 28,2024 at 20:20:02 UTC from IEEE Xplore. Restrictions apply.

INTEL-1011
U.S. Patent 8,219,129

## C.3 Instructions for completing the PICS proforma

If it is claimed to conform to this standard, the actual PICS proforma to be filled in by a supplier shall be technically equivalent to the text of the PICS proforma in this annex and shall preserve the numbering, naming, and ordering of the PICS proforma.

A PICS that conforms to this annex shall be a conforming PICS proforma completed in accordance with the instructions for completion given in this annex.

The main part of the PICS is a fixed-format questionnaire, divided into five tables. Answers to the questionnaire are to be provided in the rightmost column, either by simply marking an answer to indicate a restricted choice (such as Yes or No) or by entering a value or a set or range of values.

## C.4 Identification of the implementation

Implementation under test (IUT) identification

IUT name: _____

IUT version: _____

_____

System under test (SUT) identification

SUT name: _____

Hardware configuration: _____

_____

_____

Operating system: _____

Product supplier

Name: _____

Address: _____

_____

Telephone number: _____

Facsimile number: _____

Email address: _____

Additional information: _____


Copyright © 2003 IEEE. All rights reserved.
Authorized licensed use limited to: IEEE - Staff. Downloaded on October 28,2024 at 20:20:02 UTC from IEEE Xplore. Restrictions apply.

INTEL-1011
U.S. Patent 8,219,129

Client

Name: _____

Address: _____

_____

Telephone number: _____

Facsimile number: _____

Email address: _____

Additional information: _____

PICS contact person

Name: _____

Address: _____

_____

Telephone number: _____

Facsimile number: _____

Email address: _____

Additional information: _____

PICS/System conformance statement

Provide the relationship of the PICS with the system conformance statement for the system: _____

_____

_____

## C.5 Identification of the protocol

This PICS proforma applies to IEEE Std 802.15.4™-2003.

Copyright © 2003 IEEE. All rights reserved.

Authorized licensed use limited to: IEEE - Staff. Downloaded on October 28,2024 at 20:20:02 UTC from IEEE Xplore. Restrictions apply.

INTEL-1011
U.S. Patent 8,219,129

## C.6 Global statement of conformance

The implementation described in this PICS proforma meets all of the mandatory requirements of the referenced standard.

[ ] Yes

[ ] No

Note—Answering 'No' indicates nonconformance to the specified protocol standard. Nonsupported mandatory capabilities are to be identified in the following tables, with an explanation by the implementor explaining why the implementation is nonconforming.

The supplier will have fully complied with the requirements for a statement of conformance by completing the statement contained in this subclause. However, the supplier may find it helpful to continue to complete the detailed tabulations in the subclauses that follow.

## C.7 PICS proforma tables

The following tables are composed of the detailed questions to be answered, which make up the PICS proforma. There are three major subclauses. The first subclause contains the major roles for an IEEE 802.15.4 device. The second subclause contains the major capabilities for the physical layer (PHY) and radio frequencies (RFs). The third subclause contains the major capability for the MAC sublayer. Further subclauses within these subclauses may exist.

### C.7.1 Major roles for IEEE 802.15.4 devices

**Table C.1—Functional device types**

| Item number | Item description | Reference | Status | Support | | |
|---|---|---|---|---|---|---|
| | | | | N/A | Yes | No |
| FD1 | Is this a full function device (FFD) | Clause 5, 5.1 | O.1 | | | |
| FD2 | Is this a reduced function device (RFD) | Clause 5, 5.1 | O.1 | | | |
| FD3 | Support of 64 bit IEEE address | Clause 5, 5.2 | M | | | |
| FD4 | Assignment of short network address (16 bit) | Clause 5, 5.2 | FD1 : M | | | |
| FD5 | Support of short network address (16 bit) | Clause 5, 5.2 | M | | | |
| O.1 At least one of these features shall be supported. | | | | | | |


Copyright © 2003 IEEE. All rights reserved.
Authorized licensed use limited to: IEEE - Staff. Downloaded on October 28,2024 at 20:20:02 UTC from IEEE Xplore. Restrictions apply.

INTEL-1011
U.S. Patent 8,219,129

## C.7.2 Major capabilities for the PHY

### C.7.2.1 PHY functions

**Table C.2—PHY functions**

| Item number | Item description | Reference | Status | Support | | |
|---|---|---|---|---|---|---|
| | | | | N/A | Yes | No |
| PLF1 | Transmission of packets | 5.3.1, Clause 6, 6.2.1.1 | M | | | |
| PLF2 | Reception of packets | 5.3.1, Clause 6, 6.2.1.3 | M | | | |
| PLF3 | Activation of radio transceiver | 5.3.1, Clause 6, 6.2.2.7, 6.2.2.8 | M | | | |
| PLF4 | Deactivation of radio transceiver | 5.3.1, Clause 6, 6.2.2.7, 6.2.2.8 | M | | | |
| PLF5 | Energy detec-tion (ED) | 5.3.1, Clause 6, 6.2.2.3, 6.2.2.4, 6.7.7 | FD1: M<br>O | | | |
| PLF6 | Link quality indication (LQI) | 5.3.1, Clause 6, 6.2.1.3, 6.7.8 | M | | | |
| PLF7 | Channel selection | 5.3.1, Clause 6, 6.2.2.9, 6.2.2.10 | M | | | |
| PLF8 | Clear channel assessment (CCA) | 5.3.1, Clause 6, 6.2.2.1 6.7.9 | M | | | |
| PLF8.1 | Mode 1 | 6.7.9 | O.2 | | | |
| PLF8.2 | Mode 2 | 6.7.9 | O.2 | | | |
| PLF8.3 | Mode 3 | 6.7.9 | O.2 | | | |
| O.2 At least one of these features shall be supported. | | | | | | |

### C.7.2.2 PHY packet

**Table C.3—PHY packet**

| Item number | Item description | Reference | Status | Support | | |
|---|---|---|---|---|---|---|
| | | | | N/A | Yes | No |
| PLP1 | PHY protocol data unit (PPDU) packet | 6.3 | M | | | |

Copyright © 2003 IEEE. All rights reserved.

Authorized licensed use limited to: IEEE - Staff. Downloaded on October 28,2024 at 20:20:02 UTC from IEEE Xplore. Restrictions apply.

INTEL-1011
U.S. Patent 8,219,129

#### C.7.2.3 RF

**Table C.4—RF**

| Item number | Item description | Reference | Status | Support | | |
|---|---|---|---|---|---|---|
| | | | | N/A | Yes | No |
| RF1 | 868/915 MHz PHY | 5.3.1, Clause 6, Table 1, 6.6.1, 6.6 | O.3 | | | |
| RF1.1 | 868-868.6 MHz | 5.3.1, Clause 6, Table 1, 6.6.1 | M | | | |
| RF1.2 | 902-928 MHz | 5.3.1, Clause 6, Table 1, 6.6.1 | M | | | |
| RF2 | 2450 MHz PHY | 5.3.1, Clause 6, Table 1, 6.6.1, 6.5 | O.3 | | | |
| O.3 At least one of these features shall be supported. | | | | | | |

### C.7.3 Major capabilities for the MAC sublayer

#### C.7.3.1 MAC sublayer functions

**Table C.5—MAC sublayer functions**

| Item number | Item description | Reference | Status | Support | | |
|---|---|---|---|---|---|---|
| | | | | N/A | Yes | No |
| MLF1 | Transmission of data | 5.3.2, 7.1.1 | M | | | |
| MLF1.1 | Purge data | 7.1.1.4, 7.1.1.5 | FD1 : M<br>FD2 : O | | | |
| MLF2 | Reception of data | 5.3.2, 7.1.1 | M | | | |
| MLF2.1 | Promiscuous mode | 7.5.6.2, 7.4.2 | FD1 : M<br>FD2 : O | | | |
| MLF2.2 | Control of PHY receiver | 7.1.10 | M | | | |
| MLF3 | Beacon management | 5.3.2, Clause 7 | M | | | |
| MLF3.1 | Transmit beacons | 5.3.2, Clause 7, 7.5.2.4 | FD1 : M<br>FD2: O | | | |
| MLF3.2 | Receive beacons | 5.3.2, Clause 7, 7.1.5, 7.5.4.1 | M | | | |
| MLF4 | Channel access mechanism | 5.3.2, Clause 7, 7.5.1 | M | | | |


Copyright © 2003 IEEE. All rights reserved.
Authorized licensed use limited to: IEEE - Staff. Downloaded on October 28,2024 at 20:20:02 UTC from IEEE Xplore. Restrictions apply.

INTEL-1011
U.S. Patent 8,219,129

**Table C.5—MAC sublayer functions *(continued)***

| Item number | Item description | Reference | Status | Support | | |
|---|---|---|---|---|---|---|
| | | | | N/A | Yes | No |
| MLF5 | Guaranteed time slot (GTS) management | 5.3.2, Clause 7, 7.1.7, 7.3.3, 7.5.7 | FD1:M<br>FD2: O | | | |
| MLF5.1 | GTS management (allocation) | 5.3.2, Clause 7, 7.1.7, 7.3.3, 7.5.7 | FD1 : M<br>FD2 : O | | | |
| MLF5.2 | GTS management (request) | 5.3.2, Clause 7, 7.1.7, 7.3.3, 7.5.7 | FD1 : M<br>FD2 : O | | | |
| MLF6 | Frame validation | 5.3.2, 5.4.4.3, 7.1.1.3.2, 7.2, 7.5.6.2 | M | | | |
| MLF7 | Acknowledged frame delivery | 5.3.2, Clause 7, 7.1.1.3.2, 7.2.1.1.4, 7.5.6.4 | M | | | |
| MLF8 | Association and disassociation | 5.3.2, Clause 7, 7.1.3, 7.1.4, 7.3.1, 7.5.3 | M | | | |
| MLF9 | Security | 5.3.2, 5.4.6, Clause 7, 7.5.8 | M | | | |
| MLF9.1 | Unsecured mode | 5.4.6.2.1, 7.5.8, 7.5.8.2 | M | | | |
| MLF9.2 | ACL mode | 5.4.6.2.2, 7.5.8, 7.5.8.3 | MLF9.3: M<br>O | | | |
| MLF9.3 | Secured mode | 5.4.6.2.3, 7.5.8, 7.5.8.4 | O | | | |
| MLF 9.3.1 | Access control | 5.4.6.1.1 | O.4 | | | |
| MLF 9.3.2 | Data encryption | 5.4.6.1.2 | O.4 | | | |
| MLF 9.3.3 | Frame integrity | 5.4.6.1.3 | O.4 | | | |
| MLF 9.3.4 | Sequential freshness | 5.4.6.1.4 | O.4 | | | |
| MLF10.1 | ED | 7.5.2.1, 7.5.2.1.1 | FD1: M<br>FD2: O | | | |
| MLF10.2 | Active scanning | 7.5.2.1, 7.5.2.1.2 | FD1: M<br>FD2: O | | | |
| MLF10.3 | Passive scanning | 7.5.2.1, 7.5.2.1.3 | M | | | |
| MLF10.4 | Orphan scanning | 7.5.2.1, 7.5.2.1.4 | M | | | |
| MLF11 | Control/define/determine/declare superframe structure | 5.4.1, 7.5.1.1 | FD1: M | | | |

Copyright © 2003 IEEE. All rights reserved.

Authorized licensed use limited to: IEEE - Staff. Downloaded on October 28,2024 at 20:20:02 UTC from IEEE Xplore. Restrictions apply.

INTEL-1011
U.S. Patent 8,219,129

**Table C.5—MAC sublayer functions *(continued)***

| Item number | Item description | Reference | Status | Support | | |
|---|---|---|---|---|---|---|
| | | | | N/A | Yes | No |
| MLF12 | Follow/use superframe structure | 5.4.1, 7.5.1.1 | M | | | |
| MLF13 | Store one transaction | 7.5.5 | FD1: M | | | |
| O.4 At least one of these features shall be supported. | | | | | | |

### C.7.3.2 MAC frames

**Table C.6—MAC frames**

| Item number | Item description | Reference | Transmitter | | Receiver | |
|---|---|---|---|---|---|---|
| | | | Status | Support N/A Yes No | Status | Support N/A Yes No |
| MF1 | Beacon | 5.4.3.1, 7.2.2.1 | FD1: M | | M | |
| MF2 | Data | 5.4.3.2, 7.2.2.2 | M | | M | |
| MF3 | Acknowledgment | 5.4.3.3, 7.2.2.3 | M | | M | |
| MF4 | Command | 5.4.3.4, 7.2.2.4 | M | | M | |
| MF4.1 | Association request | 5.4.3.4, 7.2.2.4, 7.3.1.1 | M | | FD1: M | |
| MF4.2 | Association response | 5.4.3.4, 7.2.2.4, 7.3.1.2 | FD1: M | | M | |
| MF4.3 | Disassociation notification | 5.4.3.4, 7.2.2.4, 7.3.1.3 | M | | M | |
| MF4.4 | Data request | 5.4.3.4, 7.2.2.4, 7.3.2.1 | M | | FD1: M | |
| MF4.5 | PAN identifier conflict notifica-tion | 5.4.3.4, 7.2.2.4, 7.3.2.2 | M | | FD1: M | |
| MF4.6 | Orphaned device notification | 5.4.3.4, 7.2.2.4, 7.3.2.3 | M | | FD1: M | |
| MF4.7 | Beacon request | 5.4.3.4, 7.2.2.4, 7.3.2.4 | FD1: M | | FD1: M | |


Copyright © 2003 IEEE. All rights reserved.
Authorized licensed use limited to: IEEE - Staff. Downloaded on October 28,2024 at 20:20:02 UTC from IEEE Xplore. Restrictions apply.

INTEL-1011
U.S. Patent 8,219,129

**Table C.6—MAC frames *(continued)***

| Item number | Item description | Reference | Transmitter | | Receiver | |
|---|---|---|---|---|---|---|
| | | | Status | Support N/A Yes No | Status | Support N/A Yes No |
| MF4.8 | Coordinator realignment | 5.4.3.4, 7.2.2.4, 7.3.2.5 | FD1: M | | M | |
| MF4.9 | GTS request | 5.4.3.4, 7.2.2.4, 7.3.3.1 | MLF5 : M | | MLF5: M | |

Copyright © 2003 IEEE. All rights reserved.

Authorized licensed use limited to: IEEE - Staff. Downloaded on October 28,2024 at 20:20:02 UTC from IEEE Xplore. Restrictions apply.

INTEL-1011
U.S. Patent 8,219,129

Copyright © 2003 IEEE. All rights reserved.
Authorized licensed use limited to: IEEE - Staff. Downloaded on October 28,2024 at 20:20:02 UTC from IEEE Xplore. Restrictions apply.

**INTEL-1011**
**U.S. Patent 8,219,129**

# Annex D

(informative)

# Formal description of IEEE 802.15.4 operation

## D.1 Specification and description language (SDL)

This annex describes the protocol behavior and abstract data structure of the MAC sublayer and PHY SDL model. That is it explains the behavior of these protocols. It does not specify the exact coding of the frames, packets, or messages or the parameters contained herein.

### D.1.1 SDL overview

SDL is an object-oriented, formal language defined by The International Telecommunications Union–Telecommunications (ITU–T) Standardization Sector [formerly Comité Consultatif International Telegraphique et Telephonique (CCITT)] as Recommendation Z.100. The language is intended for the specification of complex, event-driven, real-time, and interactive applications involving many concurrent activities that communicate using discrete signals. SDL is usually used in combination with other languages: message sequence chart, Abstract Syntax Notation Number 1 (ASN.1), and TTCN. The use of traditional SDL state models, message sequence charts, and ASN.1 is a powerful combination that covers most aspects of system engineering. These languages have been studied in the same group within the ITU-T. ITU-T Recommendation Z.100 coupled with ITU-T Recommendation Z.105 and Recommendation Z.107 define the use of SDL with ASN.1. ITU-T Recommendation Z.109 defines a unified modeling language (UML) profile for SDL, and ITU-T Recommendation Z.120 defines message sequence charts. The SDL source is written using SDL-88, with one exception. Therefore, as long as SDL-92 and SDL-2000 are backward/forward compatible with SDL-88, then so is the SDL source. The exception is the use of the ‘choice’ construct, which is currently specific to Telelogic’s product and not part of the SDL-XX recommendations. However, the construct is similar to the one used in the ASN.1, which is now part of the SDL recommendations.

NOTES:

1—The SDL definitions in this annex should be usable with any SDL tool that supports the SDL-92 or SDL-2000 update of ITU-T Recommendation Z.100. More info: http://www.sdl-forum.org/Tools/Commercial.htm.

2—The SDL code in this annex was generated using the Telelogic Tau SDL Suite (on the Sun OS v5.6) v4.2; from Telelogic AB, Malmö, Sweden (+46 40 17 47 00; http://www.telelogic.se); U.S. office in Irvine, CA (+1 949 830 8022; http://www.telelogic.com). The suite can be integrated with any operating system or kernel for automatic generation of complete real-time applications.

3—The use of Telelogic’s product to prepare this annex does not constitute an endorsement of Telelogic Tau SDL Suite by the IEEE LAN/MAN Standards Committee or by the IEEE.

4—All SDL behavior diagrams are 150mm x 180mm so that both headers and footers can be added to the annex pages that con-tain these diagrams and to satisfy the publishing margin requirements.

### D.1.2 SDL system overview

The SDL system is shown in Figure D.1. It shows the PHY and MAC sublayer following the IEEE 802 architecture as SDL blocks. Each of these blocks are described in detail in their respective clauses (i.e., D.2 and D.3). There are five SAPs shown that interface with the radio (RF), PHY/MAC (PD and PLME), or the

Copyright © 2003 IEEE. All rights reserved.

Authorized licensed use limited to: IEEE - Staff. Downloaded on October 28,2024 at 20:20:02 UTC from IEEE Xplore. Restrictions apply.

INTEL-1011
U.S. Patent 8,219,129

upper layers (MCPS and MLME). The SAPs are defined as channels and gates in the SDL system. The primitives that are carried by these channels are labelled as signallist. See D.4 for the detailed member signals for each of these signallists.

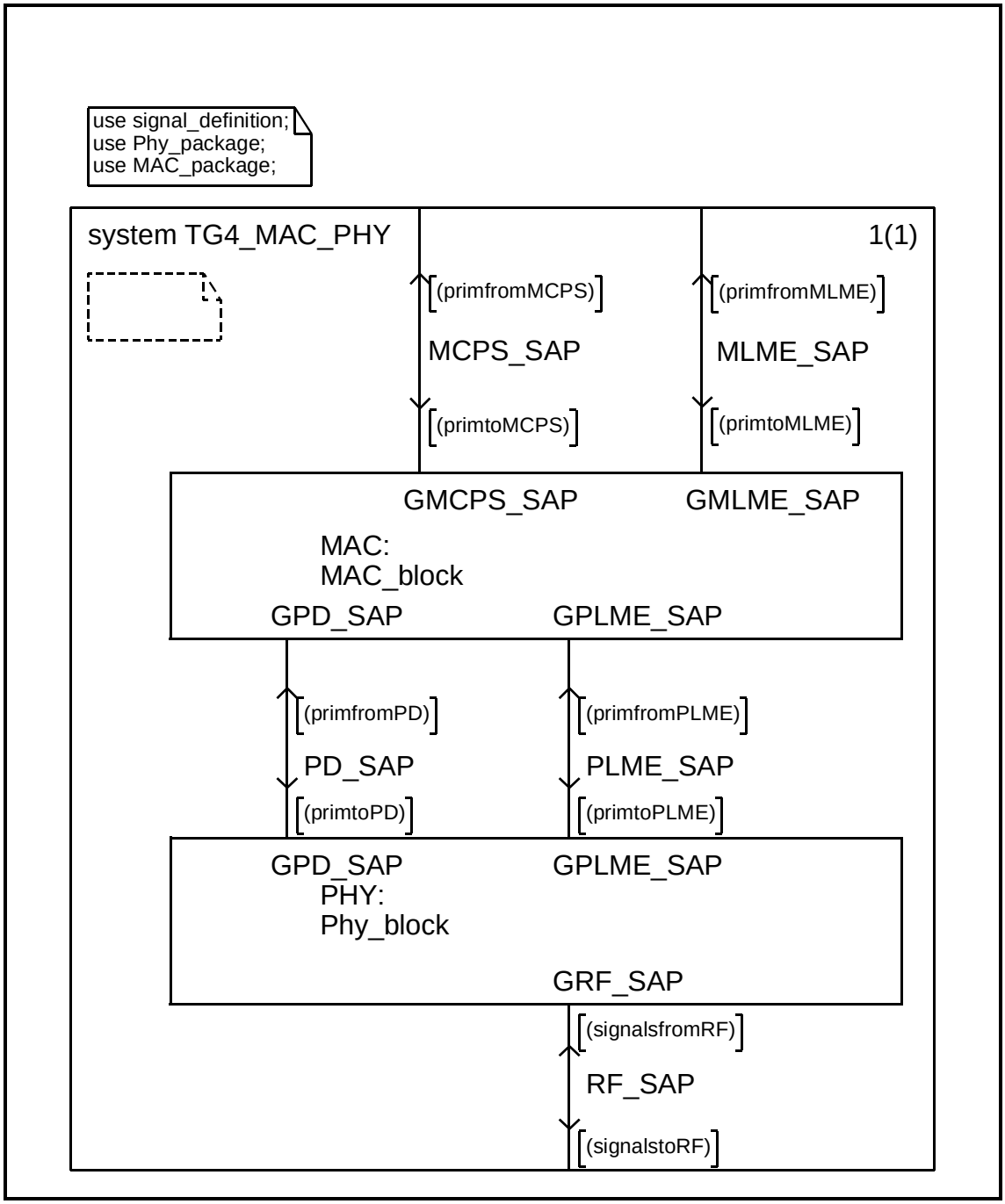


**Figure D.1—IEEE 802.15.4 system view**


Copyright © 2003 IEEE. All rights reserved.
Authorized licensed use limited to: IEEE - Staff. Downloaded on October 28,2024 at 20:20:02 UTC from IEEE Xplore. Restrictions apply.

**INTEL-1011**
**U.S. Patent 8,219,129**

### D.1.3 IEEE 802.15.4 SDL model overview

The IEEE 802.15.4 SDL model describes only the protocol behavior and abstract data structure. It is meant to explain the behavior (i.e., the interaction) of the protocols. It does not contain "code." In other words, the actual bit structure and coding are not supported. Also implementation issues, e.g., database management, are not part of the requirements, but are used as an example, so that the SDL tool extensions, e.g., the simulator and validator, can be used.

The protocols modeled are the PHY and the MAC sublayer.

Annex D.2 contains the Physical block (and package).

Annex D.3 contains the MAC sublayer (and package).

Annex D.4 contains the SDL package called "Signal_definition" contains all the signals, signallists, newtypes, and synonyms used by the entire system.

The first page of each process contains the signals (i.e., signallists) entering and leaving this process via SDL gates. The next pages contain all the variables, timers, and procedures used within this process. The remainder of the pages cover the protocol described by the process.

All variables are to be initialized in an "initialize" procedure. Some are set in an "implementation" procedure when the variable is truly an implementation decision. The goal here is to identify which variables are needed and defined by the protocol with default values and which variables are needed, but whose values are an implementation decision.

Copyright © 2003 IEEE. All rights reserved.

Authorized licensed use limited to: IEEE - Staff. Downloaded on October 28,2024 at 20:20:02 UTC from IEEE Xplore. Restrictions apply.

INTEL-1011
U.S. Patent 8,219,129

## D.2 IEEE 802.15.4 PHY package

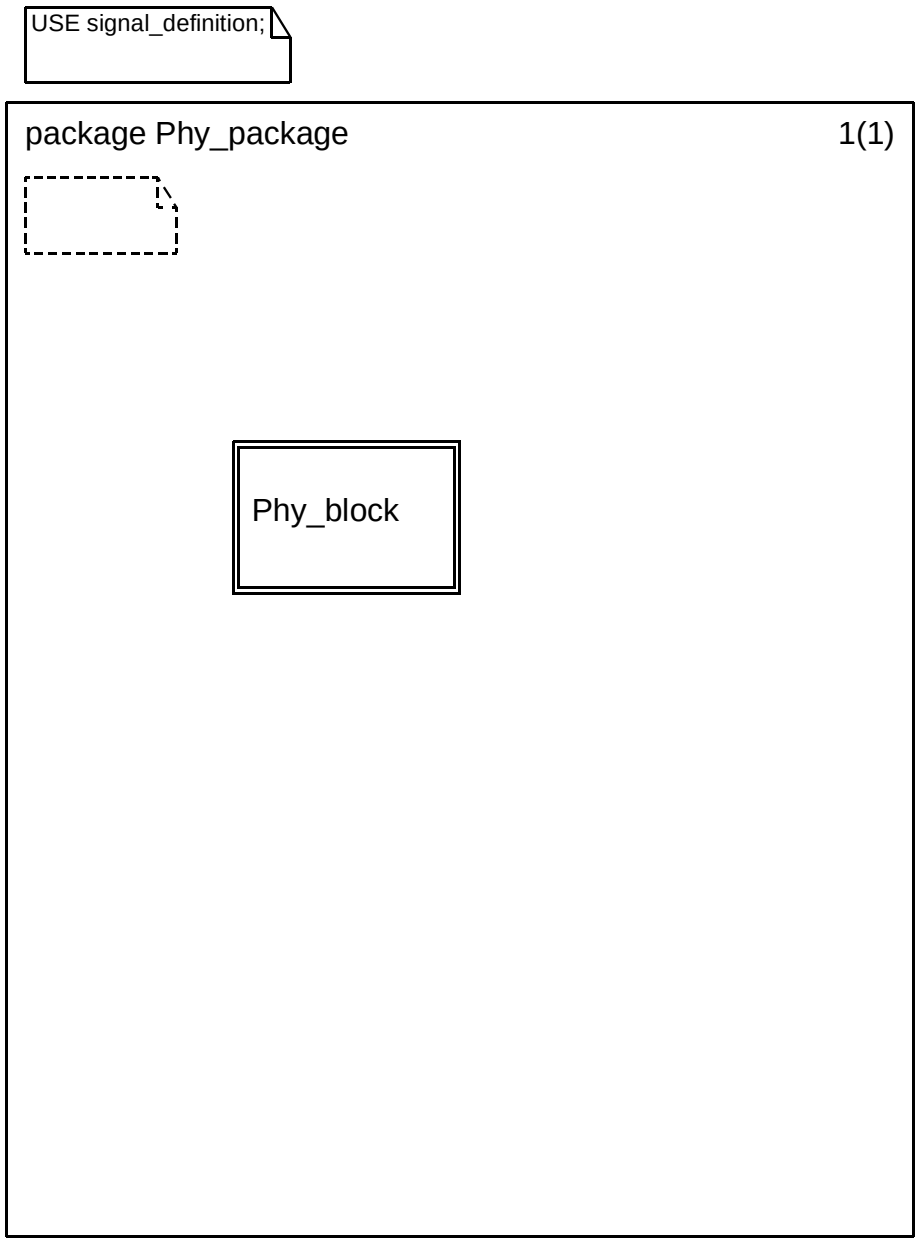



Copyright © 2003 IEEE. All rights reserved.
Authorized licensed use limited to: IEEE - Staff. Downloaded on October 28,2024 at 20:20:02 UTC from IEEE Xplore. Restrictions apply.

INTEL-1011
U.S. Patent 8,219,129

### D.2.1 Block type Phy_block

.

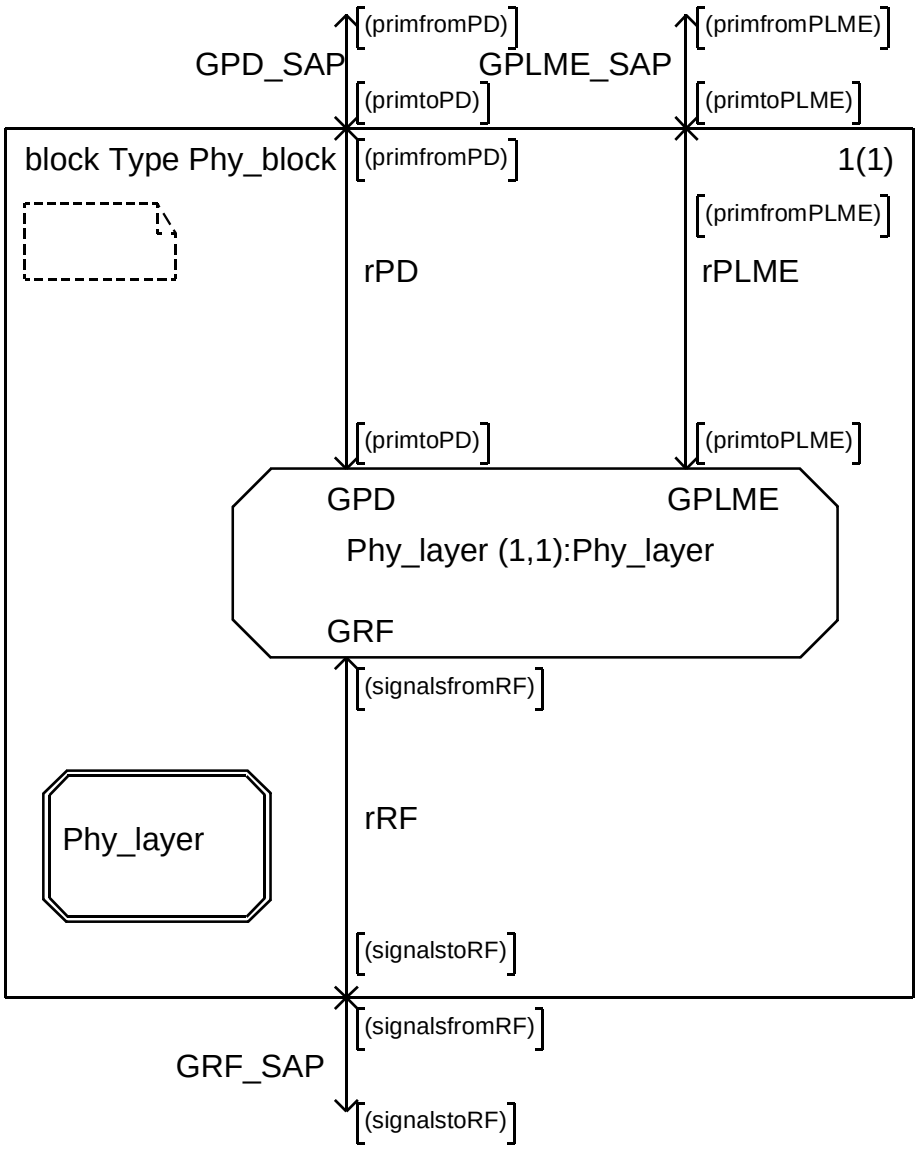


Copyright © 2003 IEEE. All rights reserved.

Authorized licensed use limited to: IEEE - Staff. Downloaded on October 28,2024 at 20:20:02 UTC from IEEE Xplore. Restrictions apply.

INTEL-1011
U.S. Patent 8,219,129

### D.2.1.1 Process type Phy_Layer (1)

.

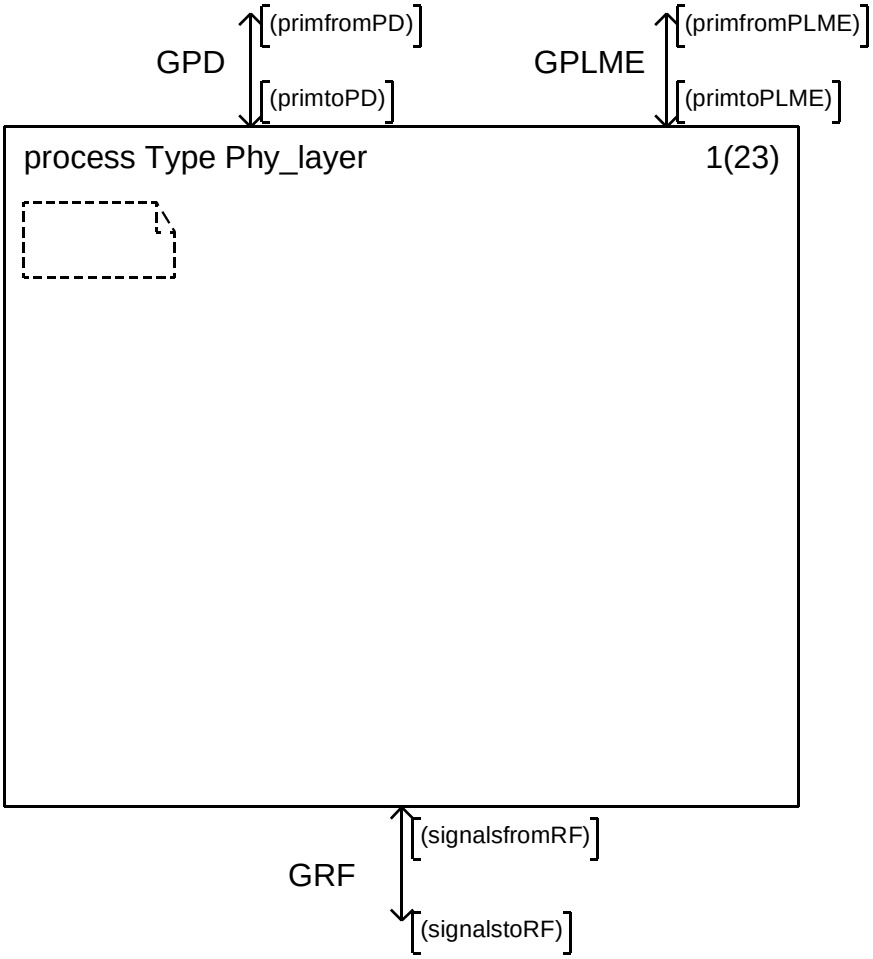



Copyright © 2003 IEEE. All rights reserved.
Authorized licensed use limited to: IEEE - Staff. Downloaded on October 28,2024 at 20:20:02 UTC from IEEE Xplore. Restrictions apply.

INTEL-1011
U.S. Patent 8,219,129

### D.2.1.2 Process type Phy_Layer (2)

.

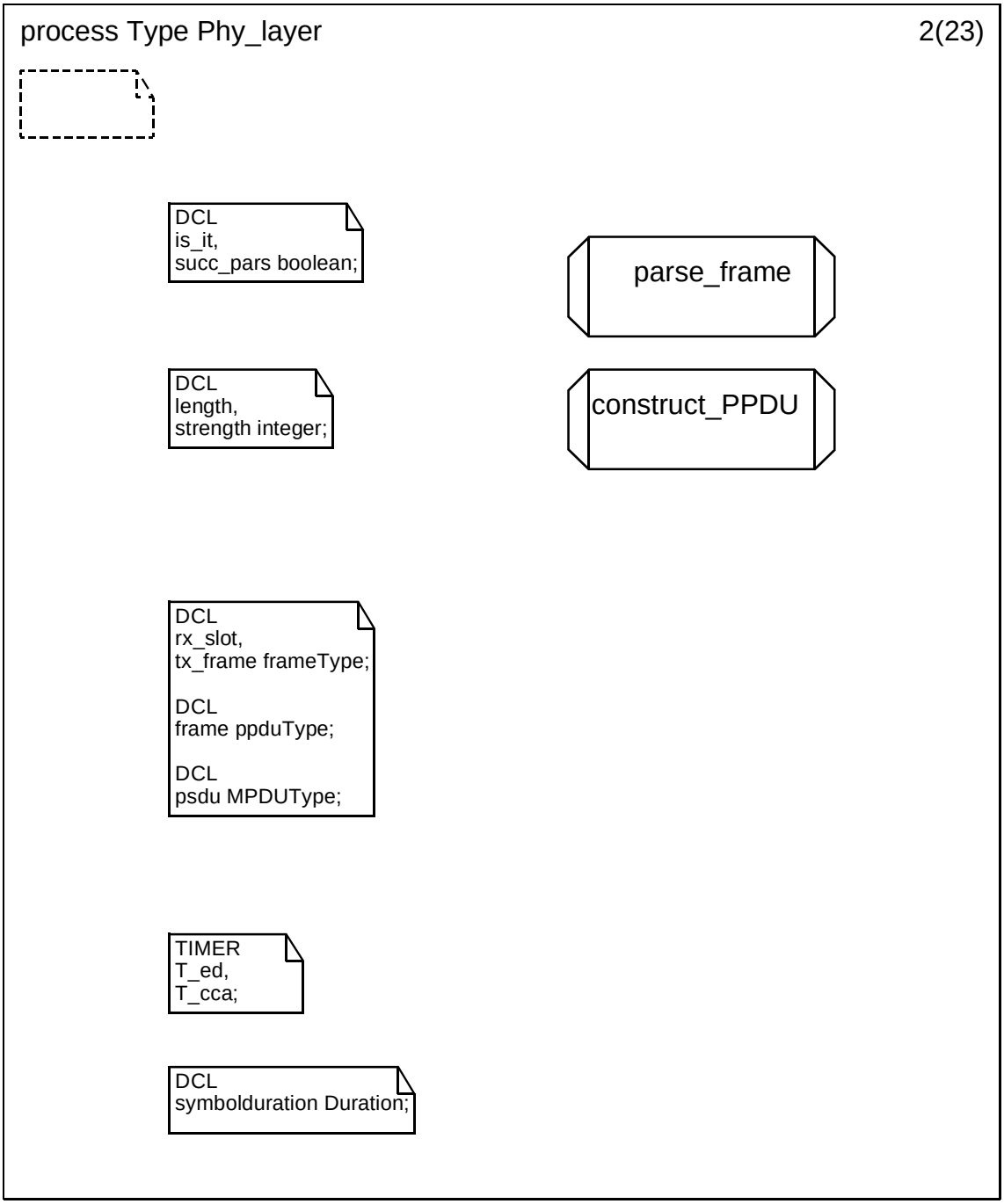


Copyright © 2003 IEEE. All rights reserved.

Authorized licensed use limited to: IEEE - Staff. Downloaded on October 28,2024 at 20:20:02 UTC from IEEE Xplore. Restrictions apply.

INTEL-1011
U.S. Patent 8,219,129

### D.2.1.3 Process type Phy_Layer (3)

.

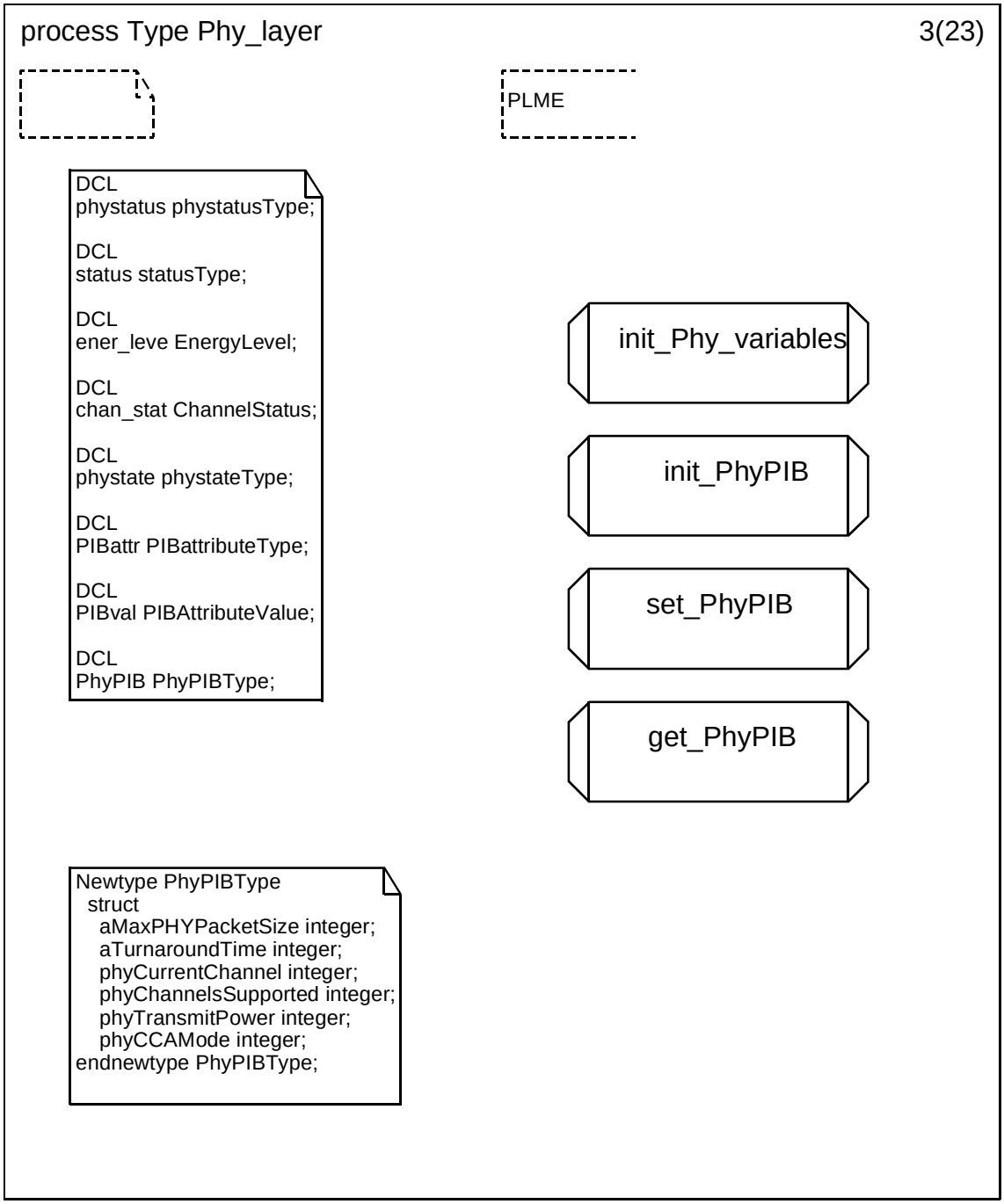



Copyright © 2003 IEEE. All rights reserved.
Authorized licensed use limited to: IEEE - Staff. Downloaded on October 28,2024 at 20:20:02 UTC from IEEE Xplore. Restrictions apply.

INTEL-1011
U.S. Patent 8,219,129

### D.2.1.4 Process type Phy_Layer (4)

.

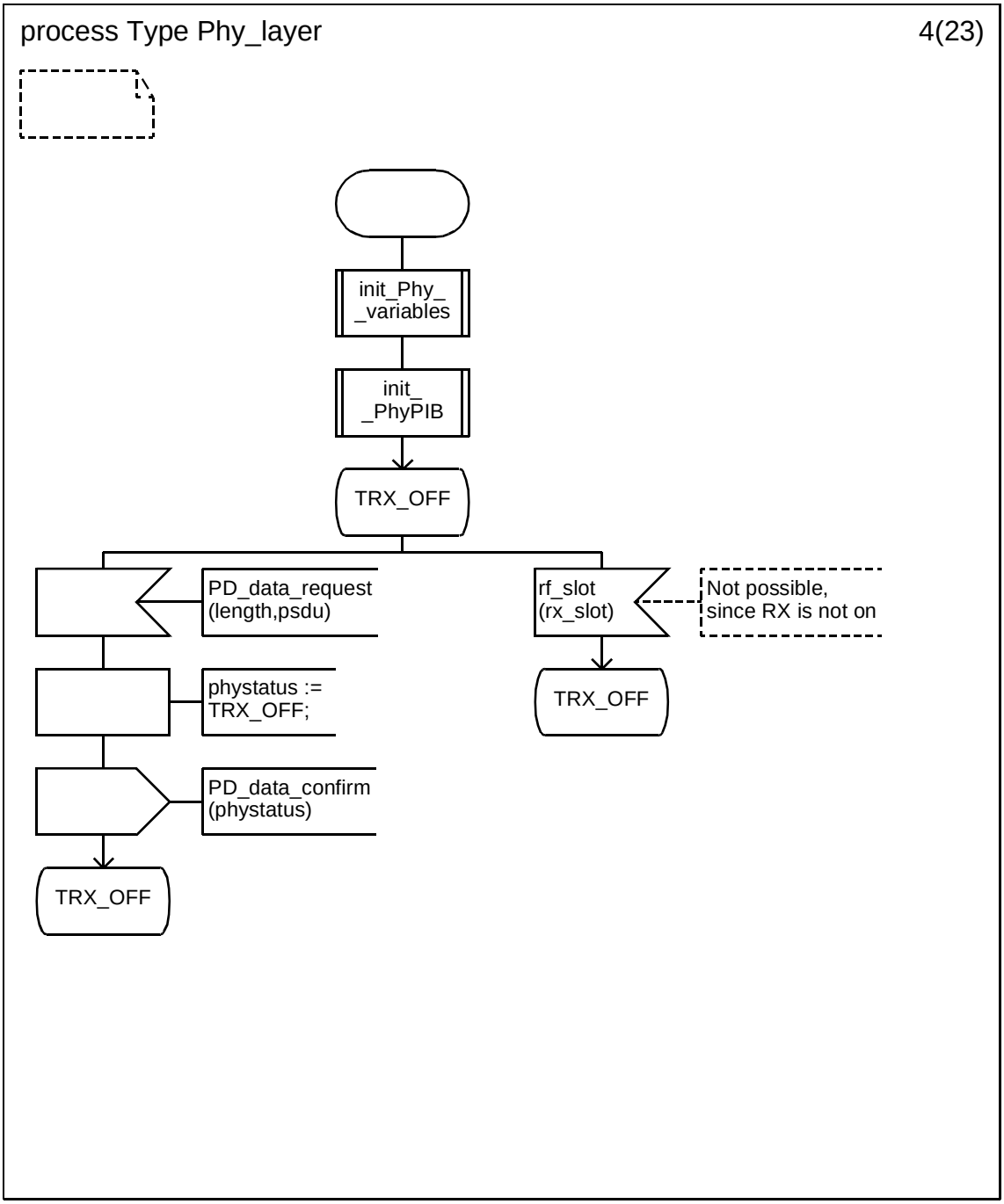


Copyright © 2003 IEEE. All rights reserved.

Authorized licensed use limited to: IEEE - Staff. Downloaded on October 28,2024 at 20:20:02 UTC from IEEE Xplore. Restrictions apply.

INTEL-1011
U.S. Patent 8,219,129

### D.2.1.5 Process type Phy_Layer (5)

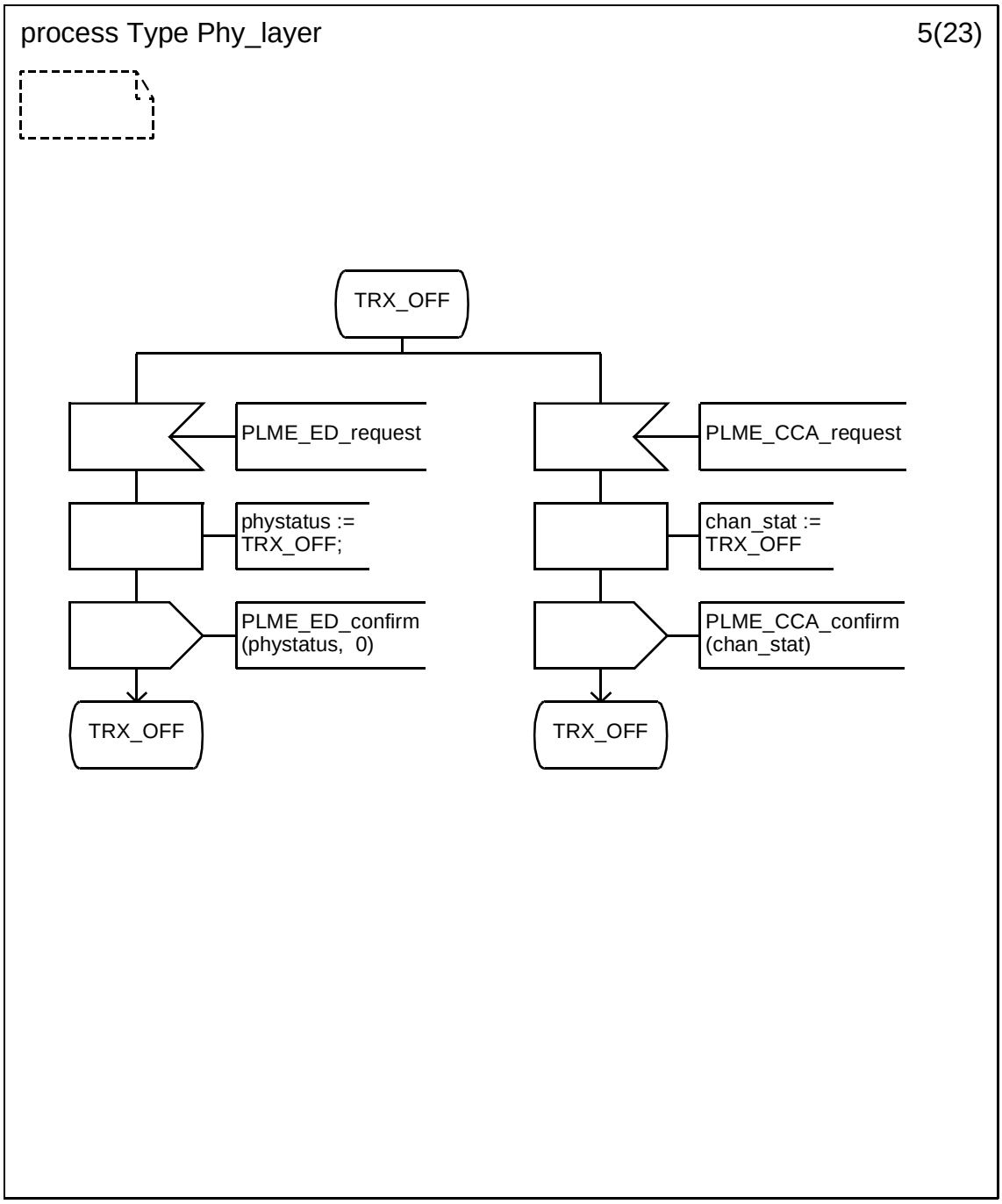



Copyright © 2003 IEEE. All rights reserved.
Authorized licensed use limited to: IEEE - Staff. Downloaded on October 28,2024 at 20:20:02 UTC from IEEE Xplore. Restrictions apply.

INTEL-1011
U.S. Patent 8,219,129

### D.2.1.6 Process type Phy_Layer (6)

.

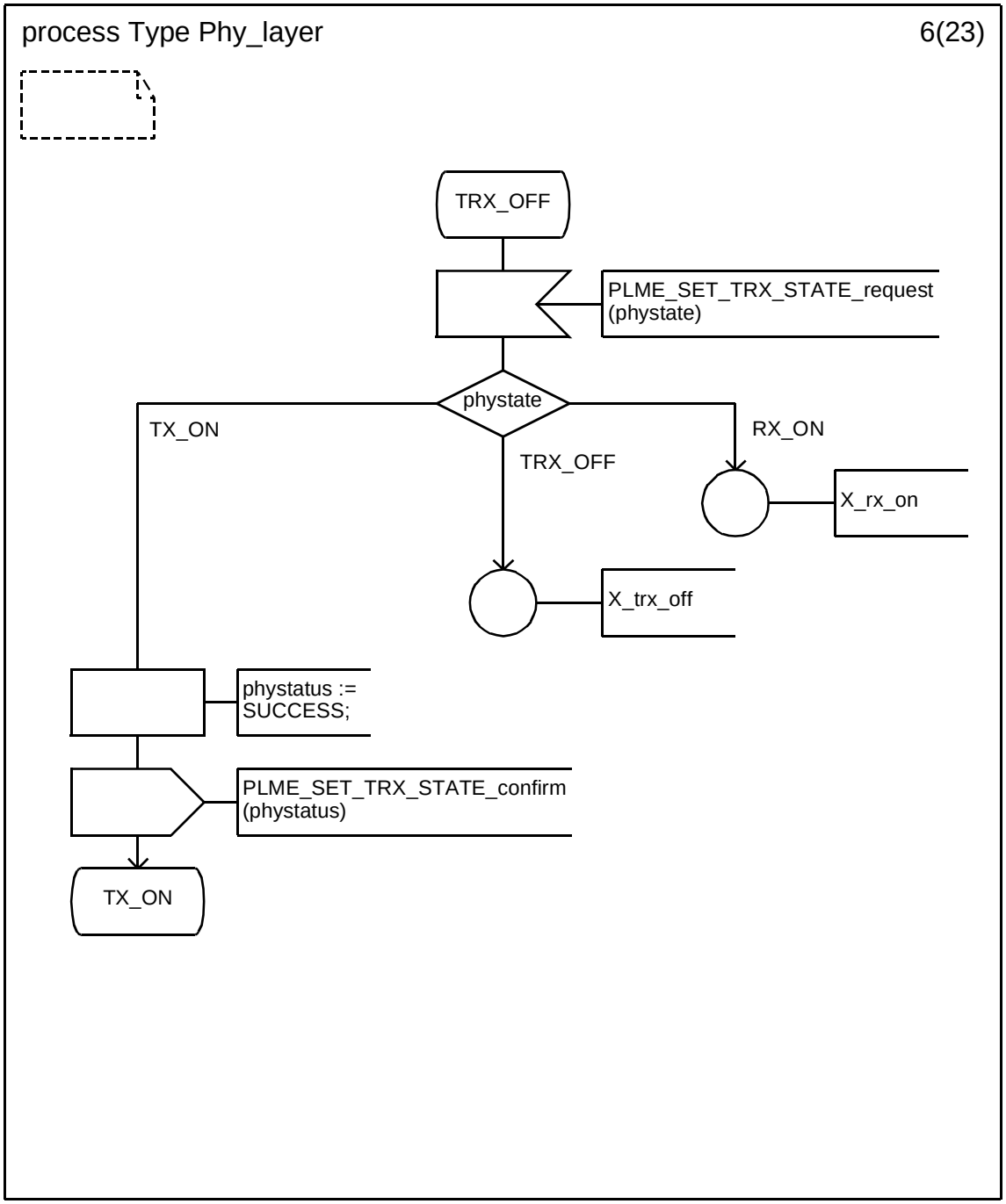


Copyright © 2003 IEEE. All rights reserved.

Authorized licensed use limited to: IEEE - Staff. Downloaded on October 28,2024 at 20:20:02 UTC from IEEE Xplore. Restrictions apply.

INTEL-1011
U.S. Patent 8,219,129

### D.2.1.7 Process type Phy_Layer (7)

.

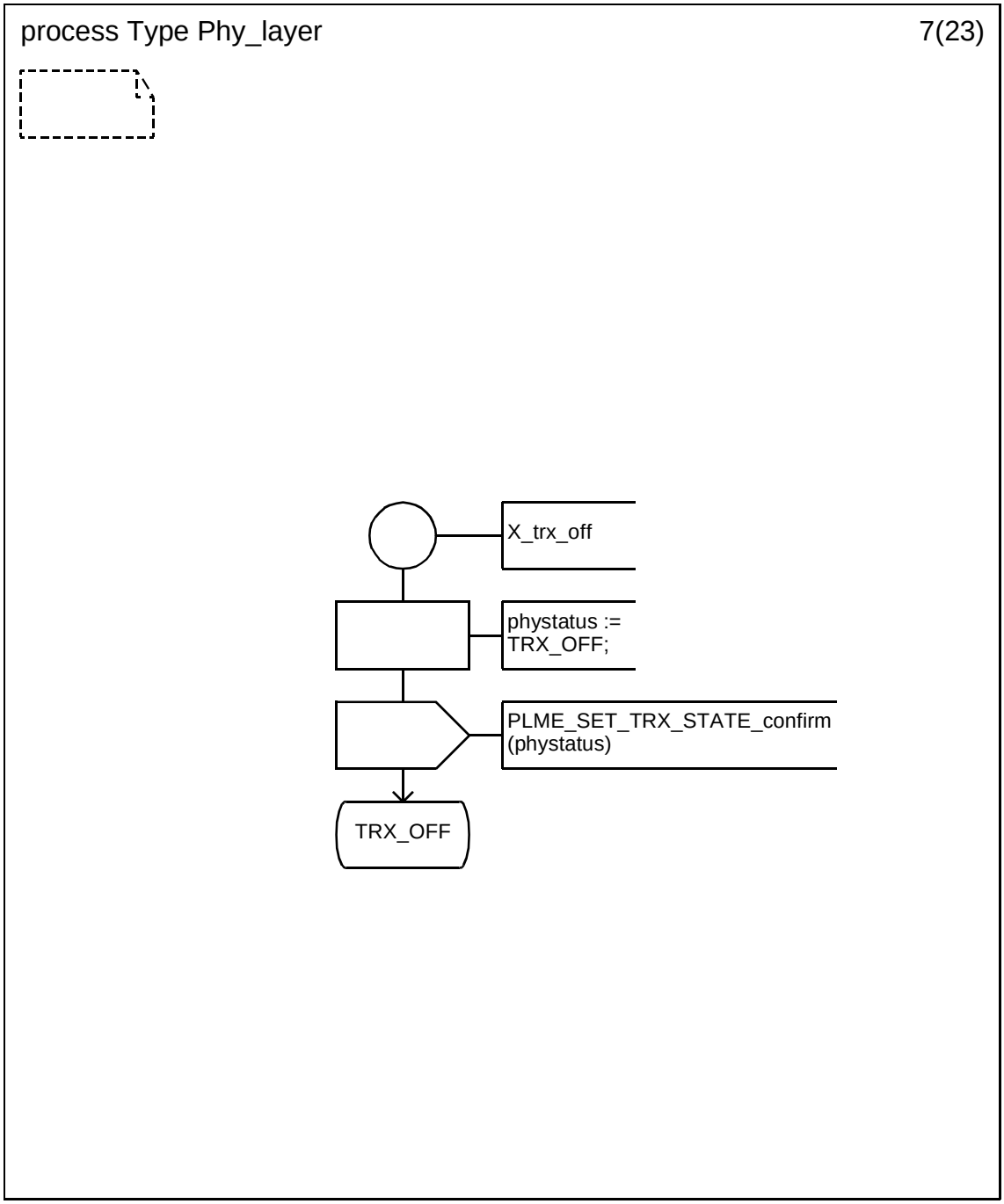



Copyright © 2003 IEEE. All rights reserved.
Authorized licensed use limited to: IEEE - Staff. Downloaded on October 28,2024 at 20:20:02 UTC from IEEE Xplore. Restrictions apply.

INTEL-1011
U.S. Patent 8,219,129

### D.2.1.8 Process type Phy_Layer (8)

.

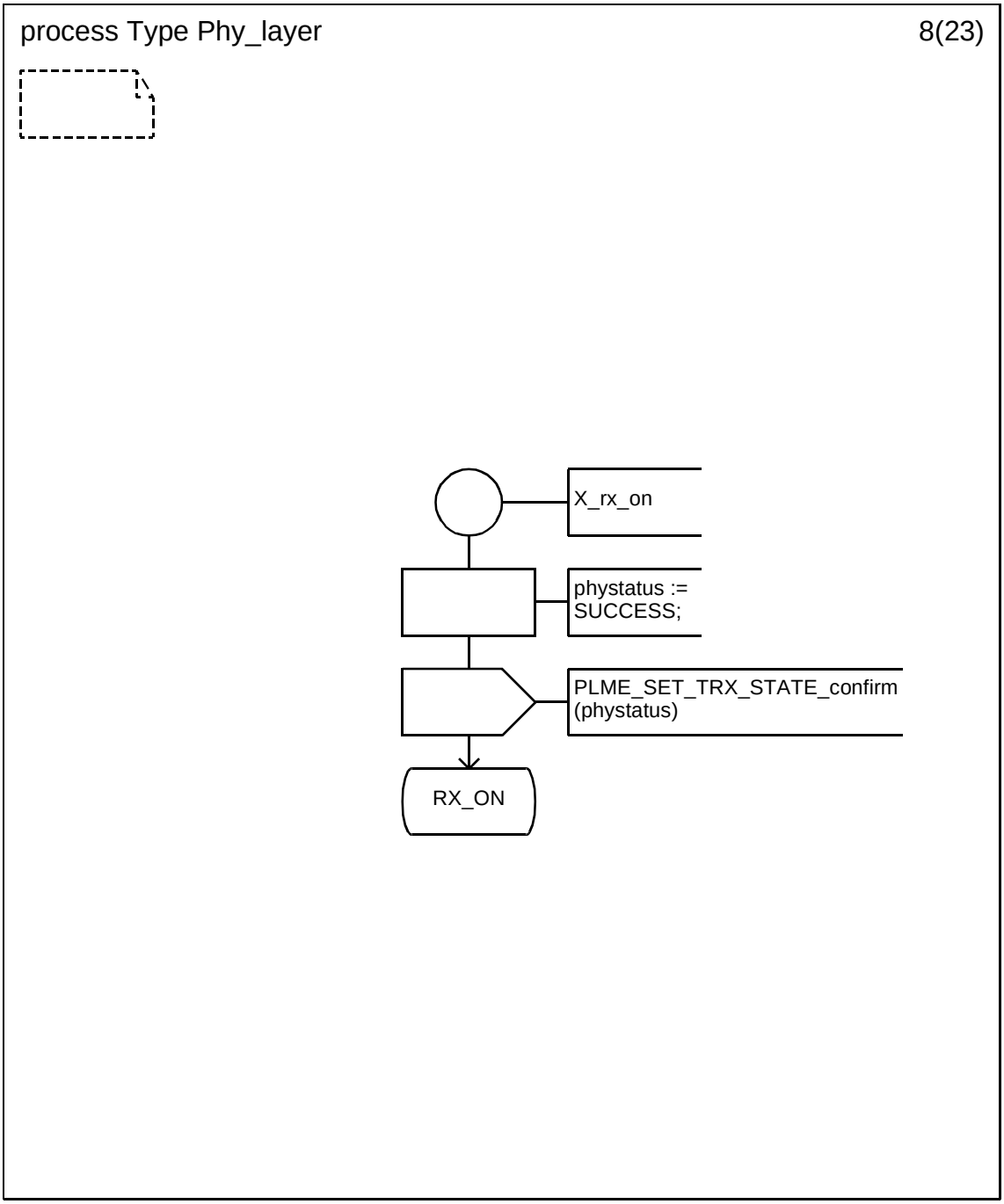


Copyright © 2003 IEEE. All rights reserved.

Authorized licensed use limited to: IEEE - Staff. Downloaded on October 28,2024 at 20:20:02 UTC from IEEE Xplore. Restrictions apply.

INTEL-1011
U.S. Patent 8,219,129

### D.2.1.9 Process type Phy_Layer (9)

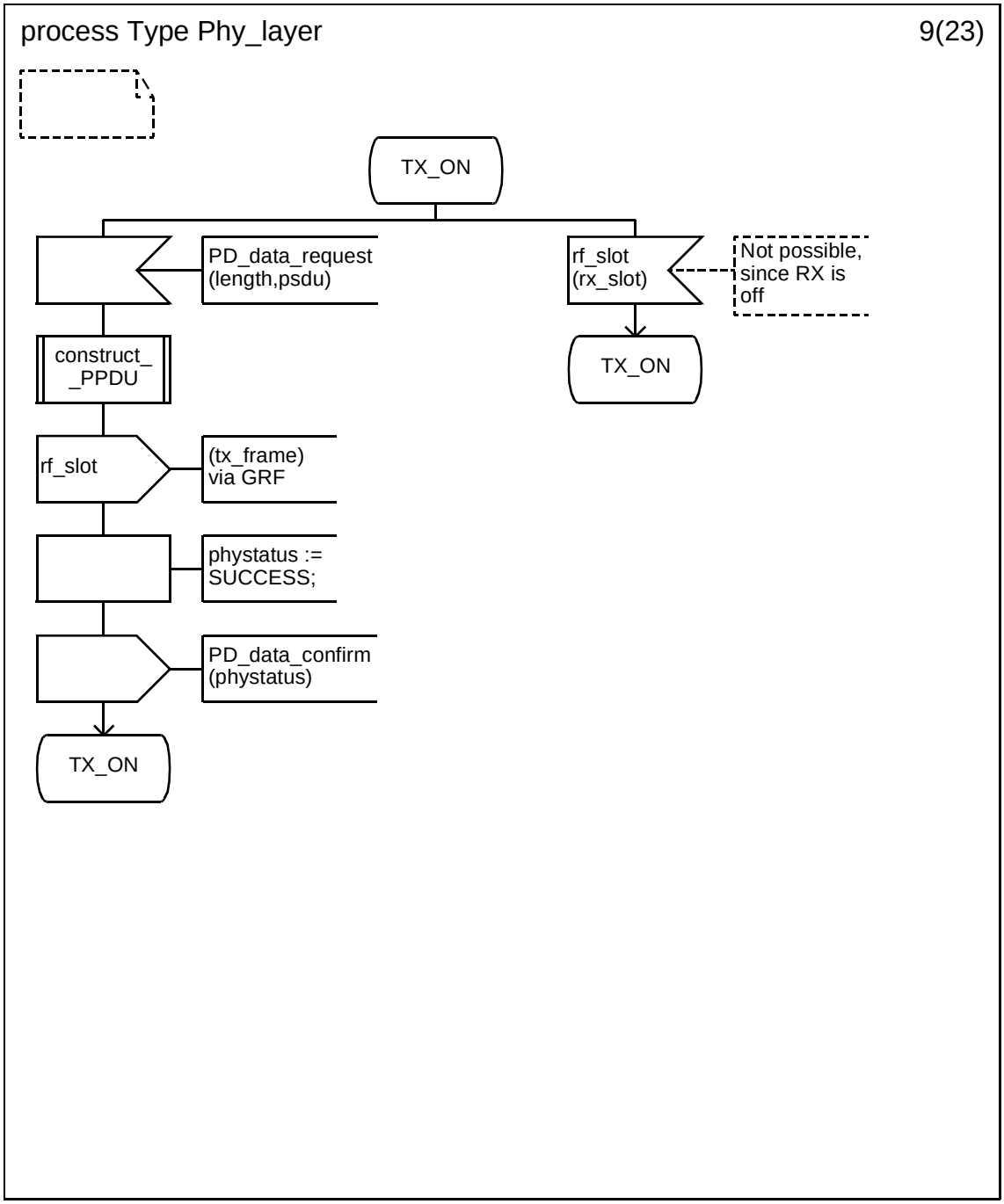



Copyright © 2003 IEEE. All rights reserved.
Authorized licensed use limited to: IEEE - Staff. Downloaded on October 28,2024 at 20:20:02 UTC from IEEE Xplore. Restrictions apply.

INTEL-1011
U.S. Patent 8,219,129

### D.2.1.10 Process type Phy_Layer (10)

.

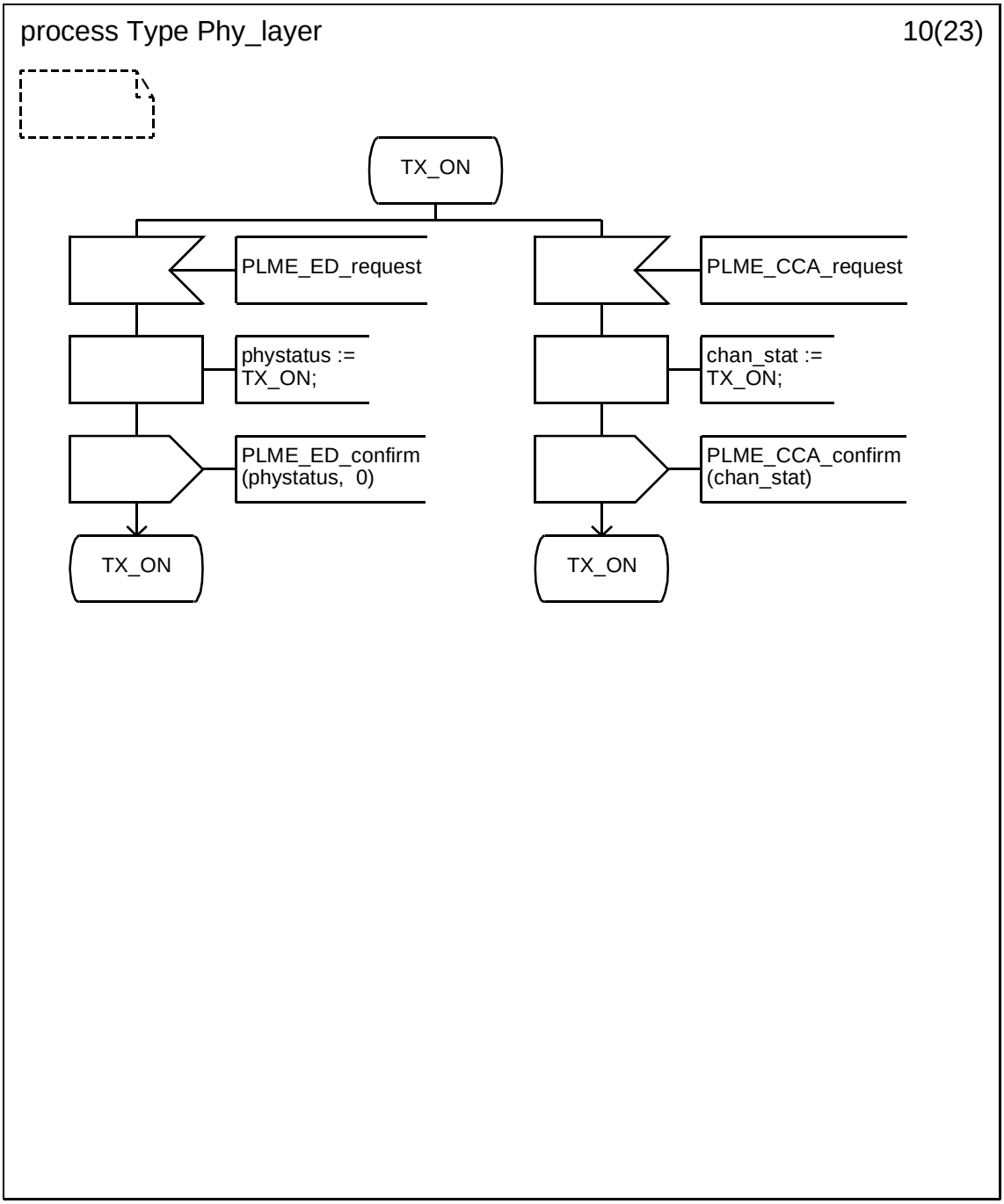


Copyright © 2003 IEEE. All rights reserved.

Authorized licensed use limited to: IEEE - Staff. Downloaded on October 28,2024 at 20:20:02 UTC from IEEE Xplore. Restrictions apply.

INTEL-1011
U.S. Patent 8,219,129

### D.2.1.11 Process type Phy_Layer (11)

.

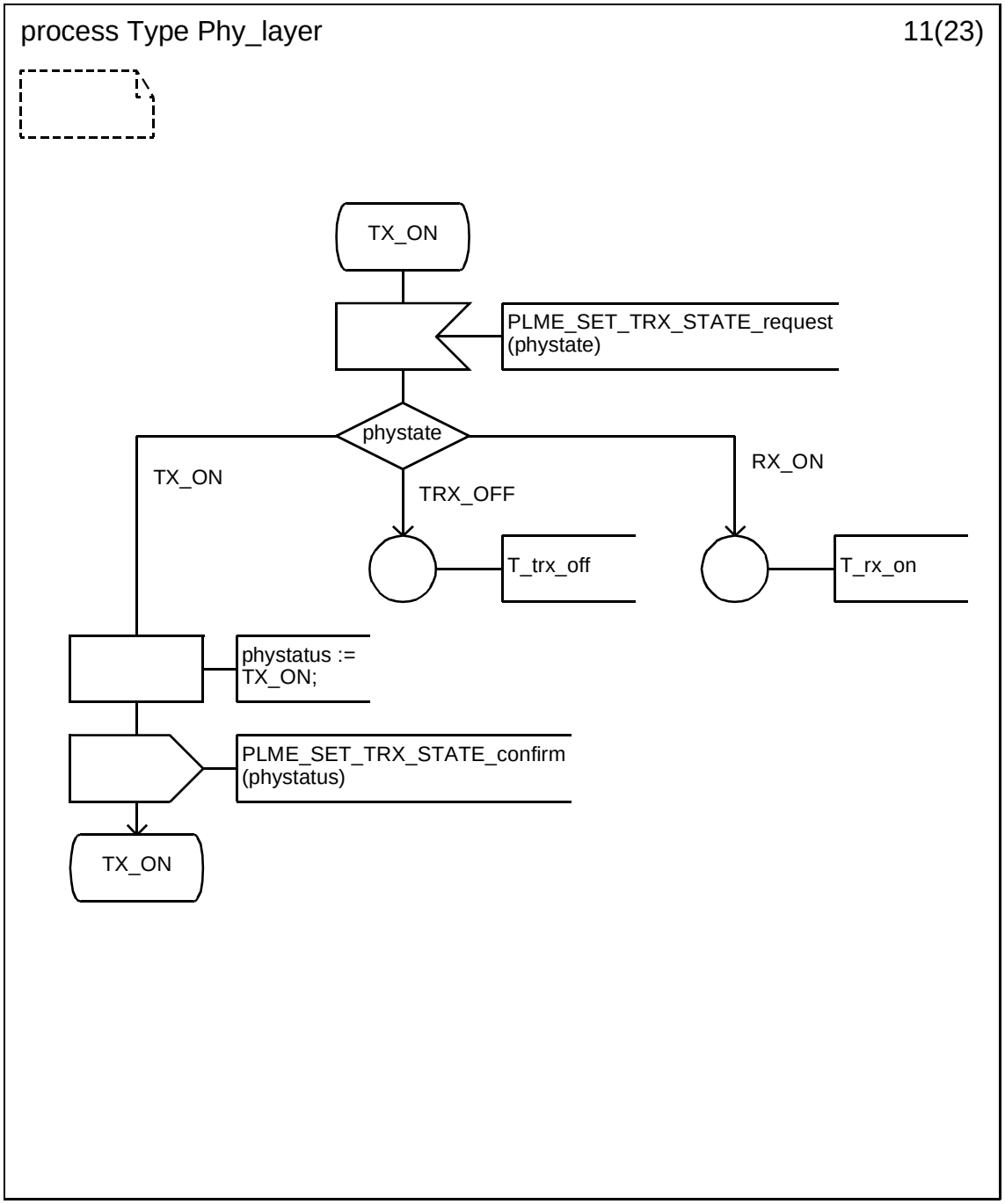



Copyright © 2003 IEEE. All rights reserved.
Authorized licensed use limited to: IEEE - Staff. Downloaded on October 28,2024 at 20:20:02 UTC from IEEE Xplore. Restrictions apply.

INTEL-1011
U.S. Patent 8,219,129

### D.2.1.12 Process type Phy_Layer (12)

.

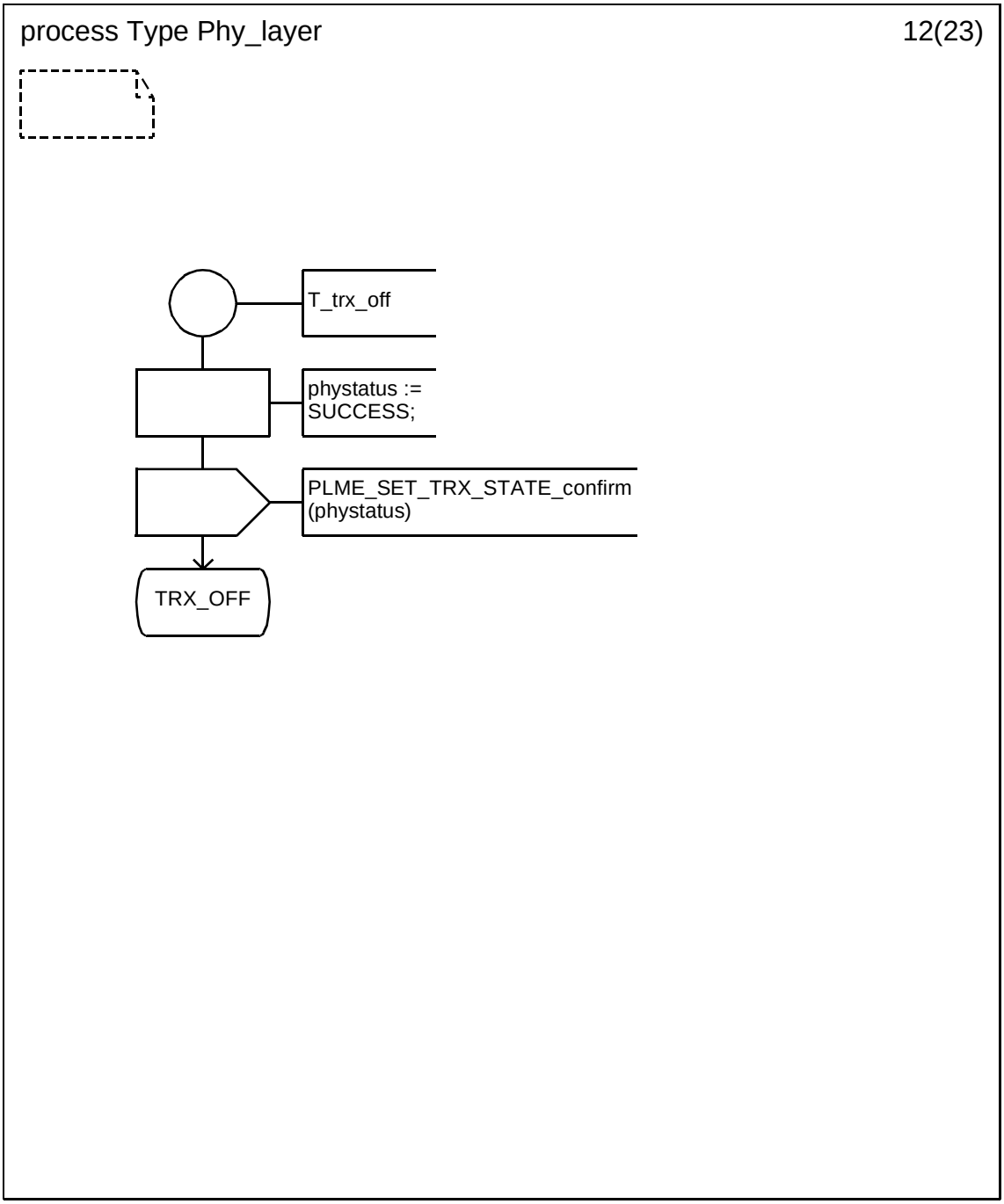


Copyright © 2003 IEEE. All rights reserved.

Authorized licensed use limited to: IEEE - Staff. Downloaded on October 28,2024 at 20:20:02 UTC from IEEE Xplore. Restrictions apply.

INTEL-1011
U.S. Patent 8,219,129

### D.2.1.13 Process type Phy_Layer (13)

.

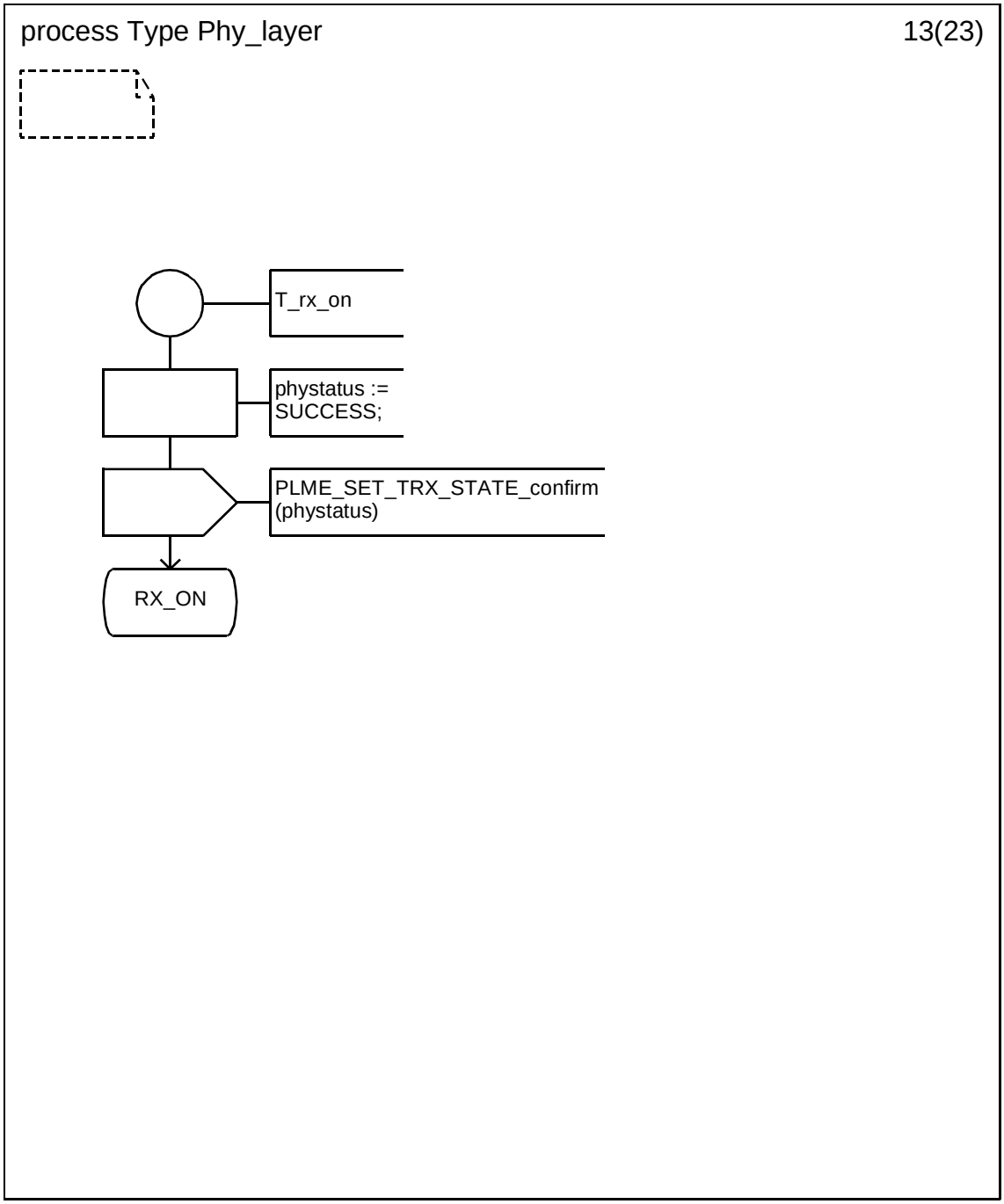



Copyright © 2003 IEEE. All rights reserved.
Authorized licensed use limited to: IEEE - Staff. Downloaded on October 28,2024 at 20:20:02 UTC from IEEE Xplore. Restrictions apply.

INTEL-1011
U.S. Patent 8,219,129

### D.2.1.14 Process type Phy_Layer (14)

.

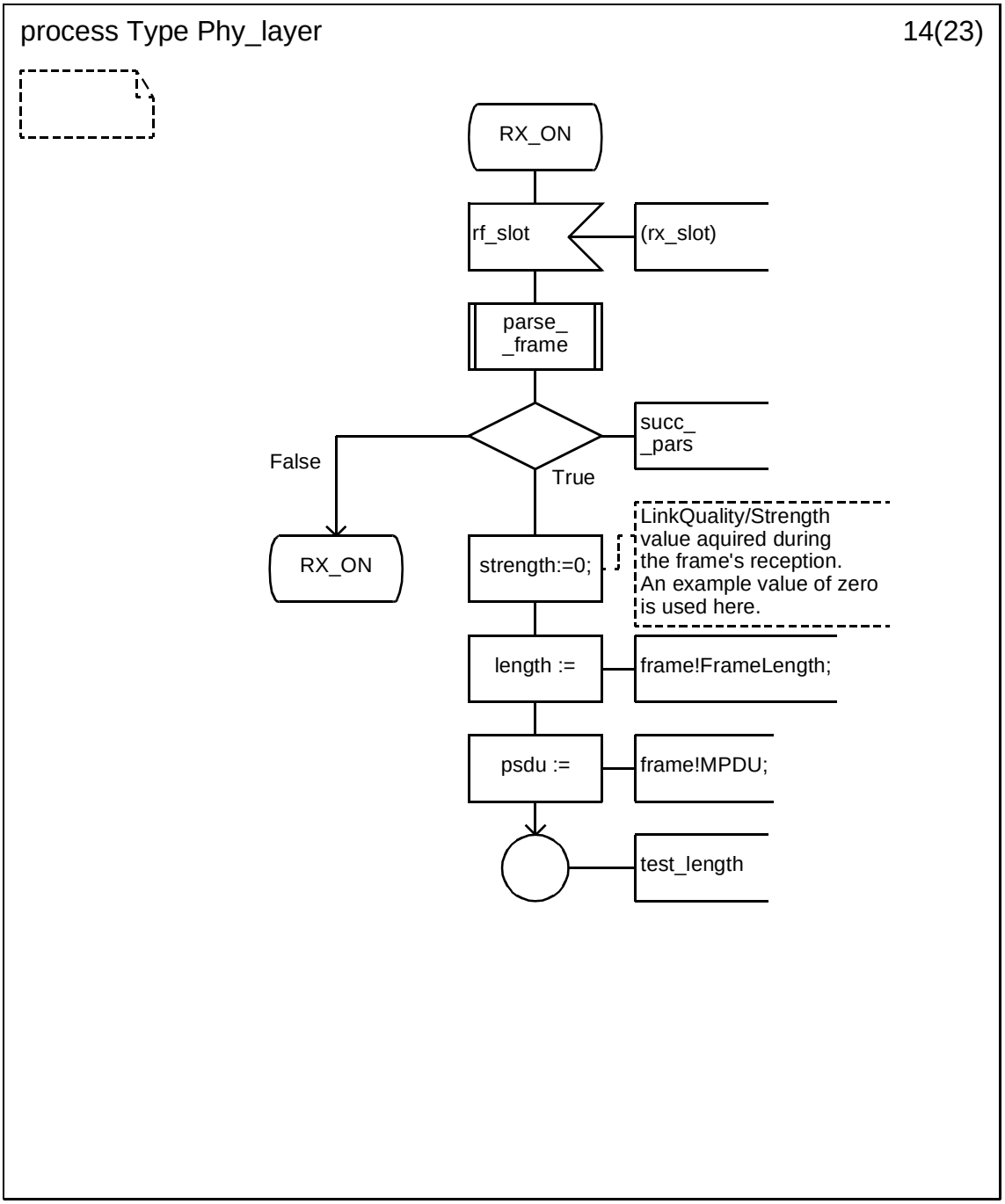


Copyright © 2003 IEEE. All rights reserved.

Authorized licensed use limited to: IEEE - Staff. Downloaded on October 28,2024 at 20:20:02 UTC from IEEE Xplore. Restrictions apply.

INTEL-1011
U.S. Patent 8,219,129

### D.2.1.15 Process type Phy_Layer (15)

.

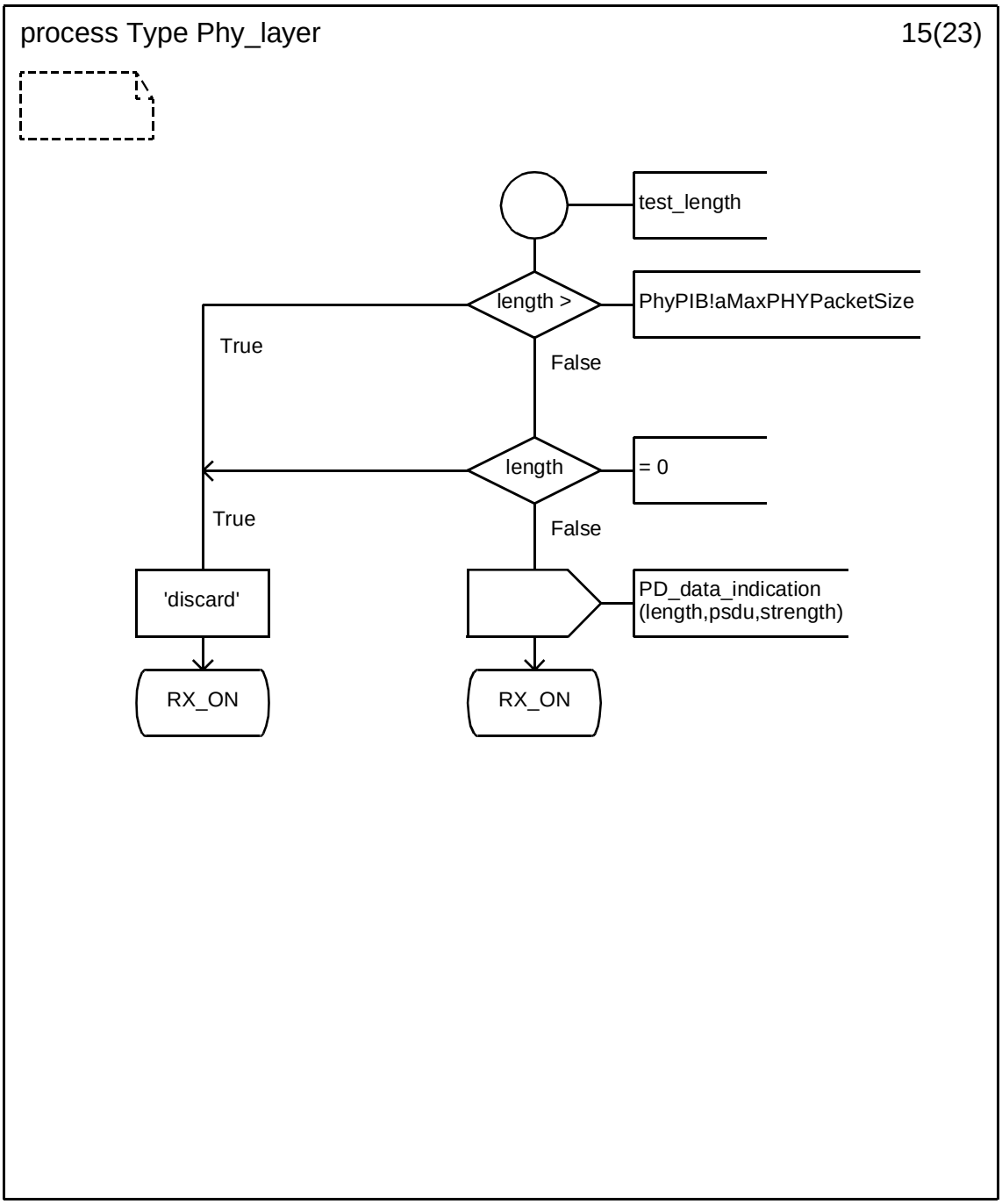



Copyright © 2003 IEEE. All rights reserved.
Authorized licensed use limited to: IEEE - Staff. Downloaded on October 28,2024 at 20:20:02 UTC from IEEE Xplore. Restrictions apply.

INTEL-1011
U.S. Patent 8,219,129

### D.2.1.16 Process type Phy_Layer (16)

.

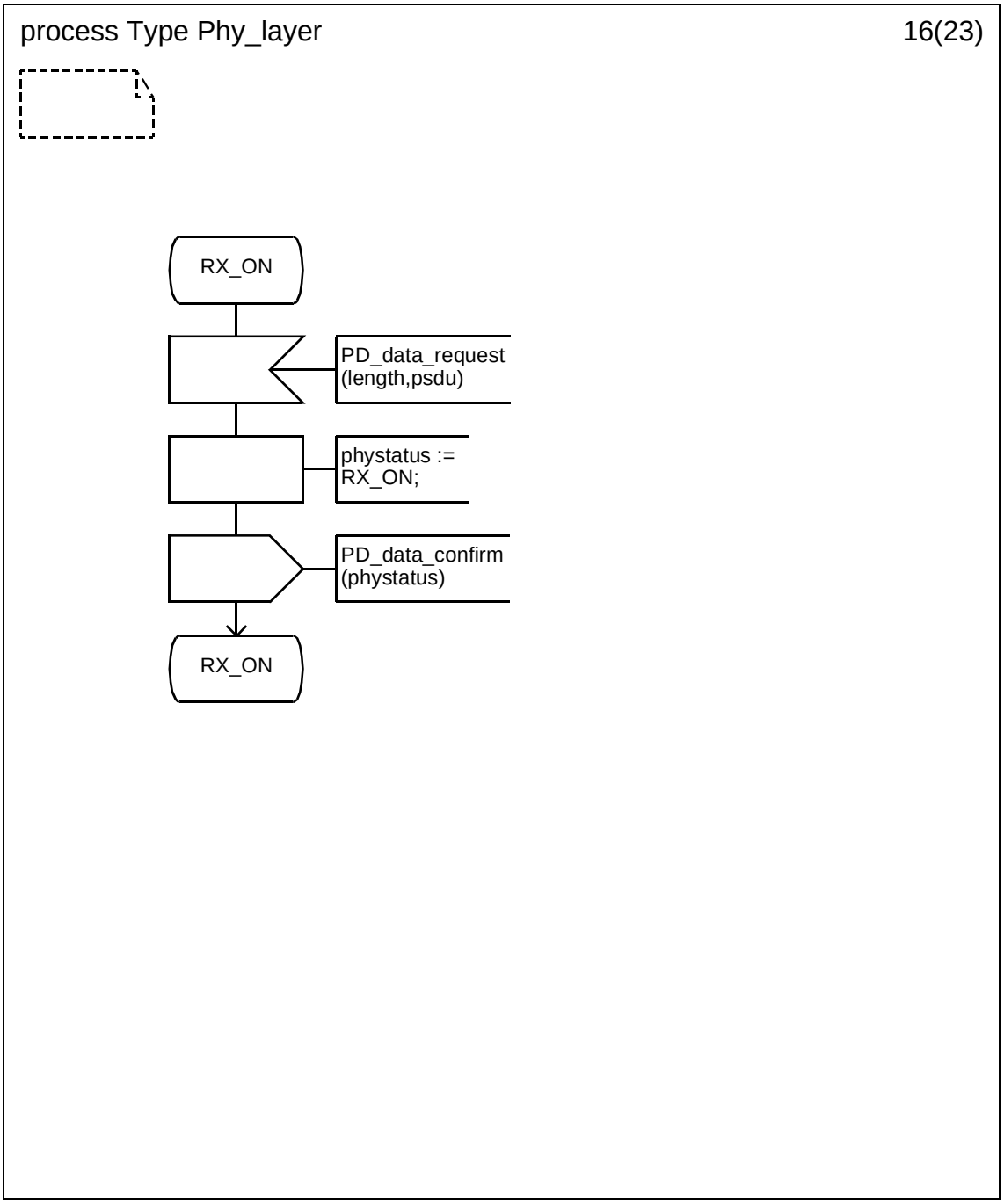


Copyright © 2003 IEEE. All rights reserved.

Authorized licensed use limited to: IEEE - Staff. Downloaded on October 28,2024 at 20:20:02 UTC from IEEE Xplore. Restrictions apply.

INTEL-1011
U.S. Patent 8,219,129

### D.2.1.17 Process type Phy_Layer (17)

.

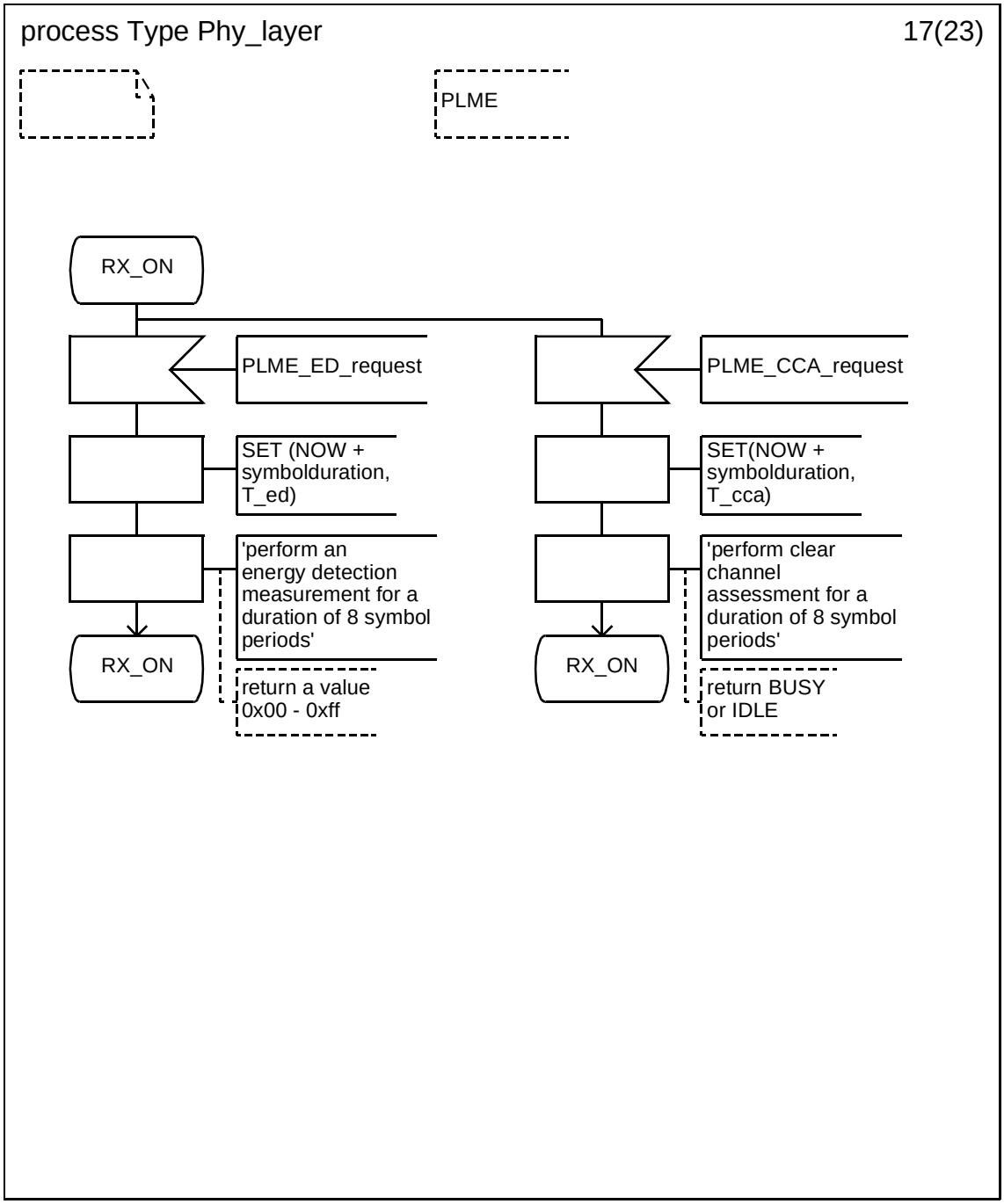



Copyright © 2003 IEEE. All rights reserved.
Authorized licensed use limited to: IEEE - Staff. Downloaded on October 28,2024 at 20:20:02 UTC from IEEE Xplore. Restrictions apply.

INTEL-1011
U.S. Patent 8,219,129

### D.2.1.18 Process type Phy_Layer (18)

.

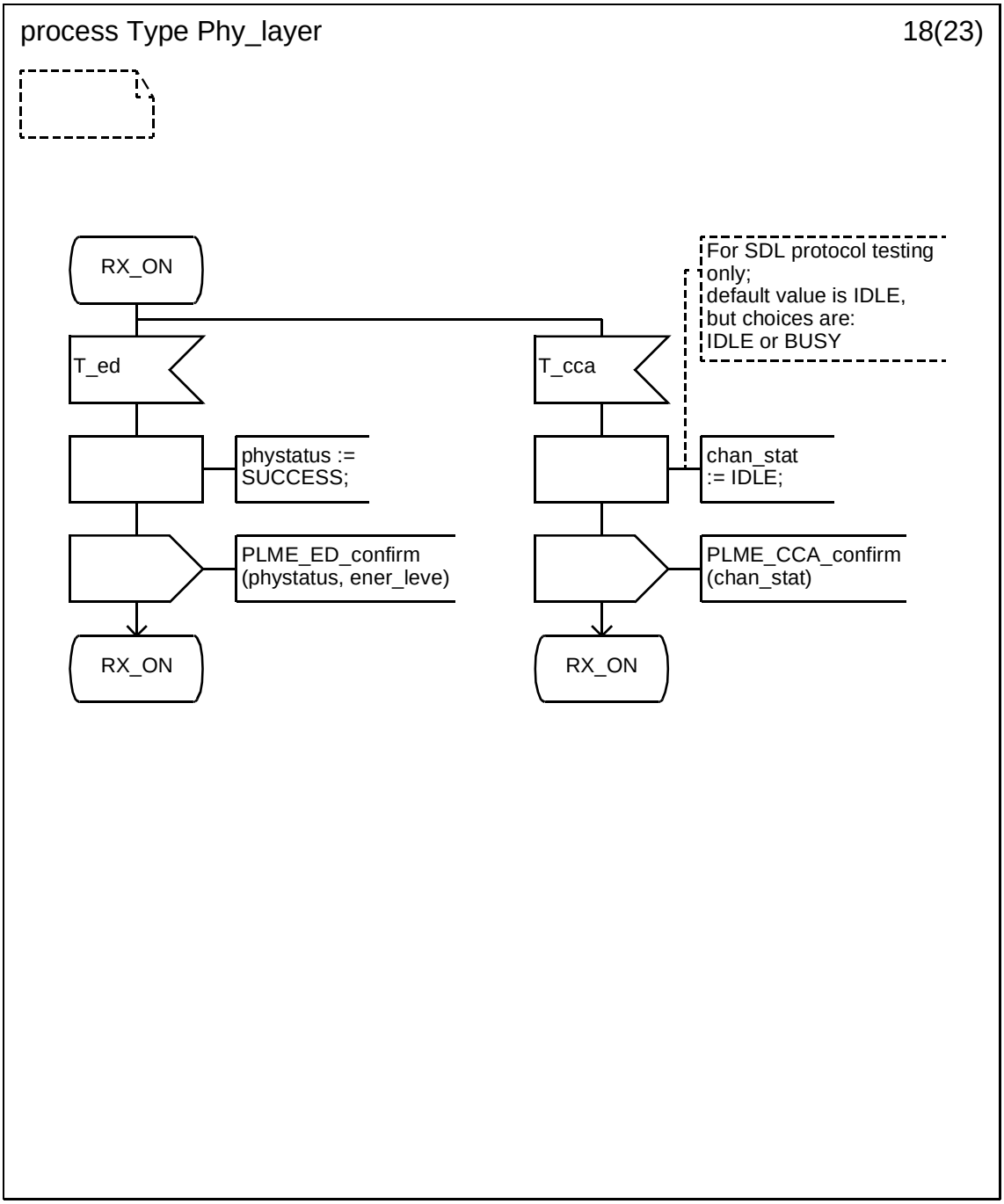


Copyright © 2003 IEEE. All rights reserved.

Authorized licensed use limited to: IEEE - Staff. Downloaded on October 28,2024 at 20:20:02 UTC from IEEE Xplore. Restrictions apply.

INTEL-1011
U.S. Patent 8,219,129

### D.2.1.19 Process type Phy_Layer (19)

.

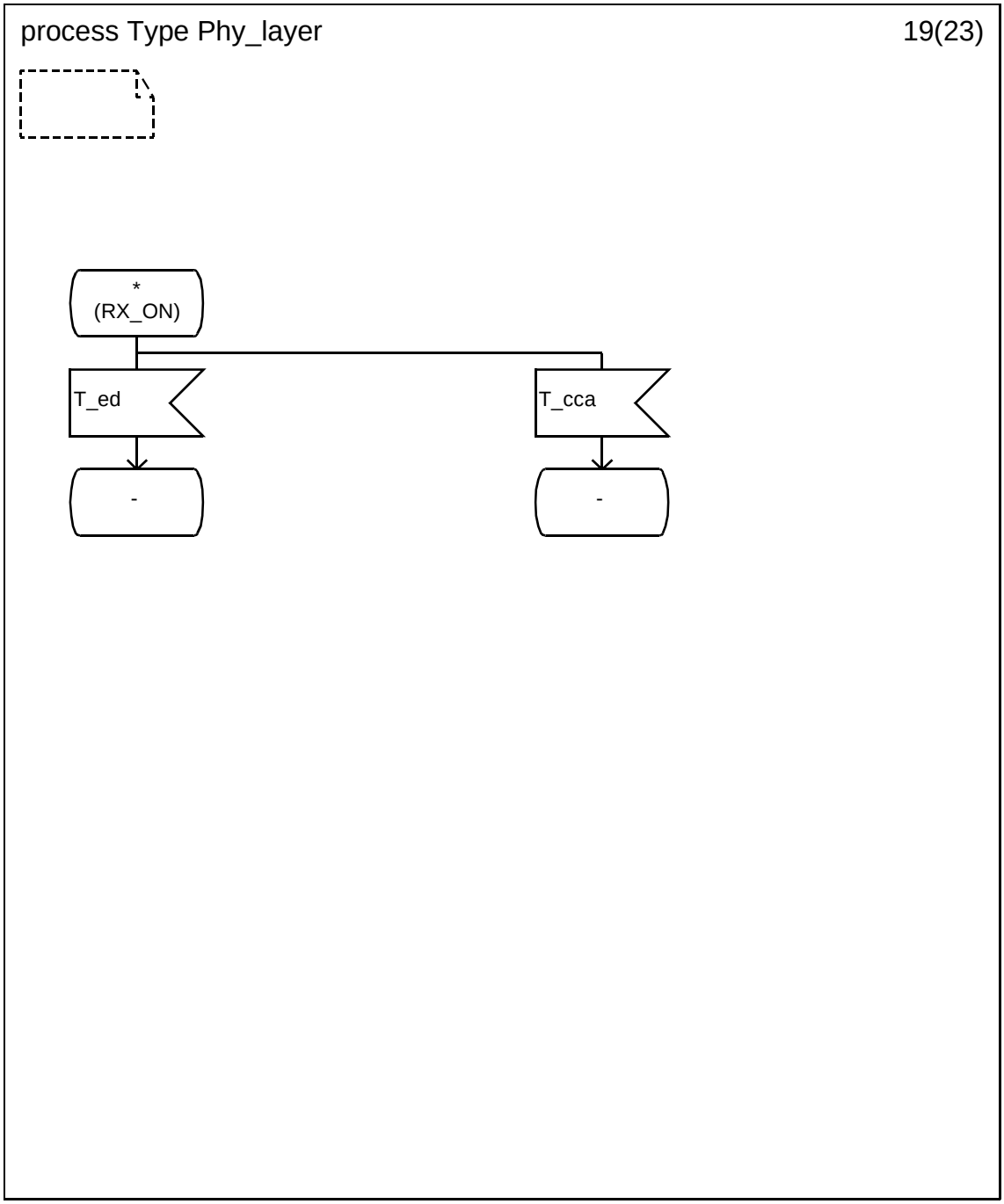



Copyright © 2003 IEEE. All rights reserved.
Authorized licensed use limited to: IEEE - Staff. Downloaded on October 28,2024 at 20:20:02 UTC from IEEE Xplore. Restrictions apply.

INTEL-1011
U.S. Patent 8,219,129

### D.2.1.20 Process type Phy_Layer (20)

.

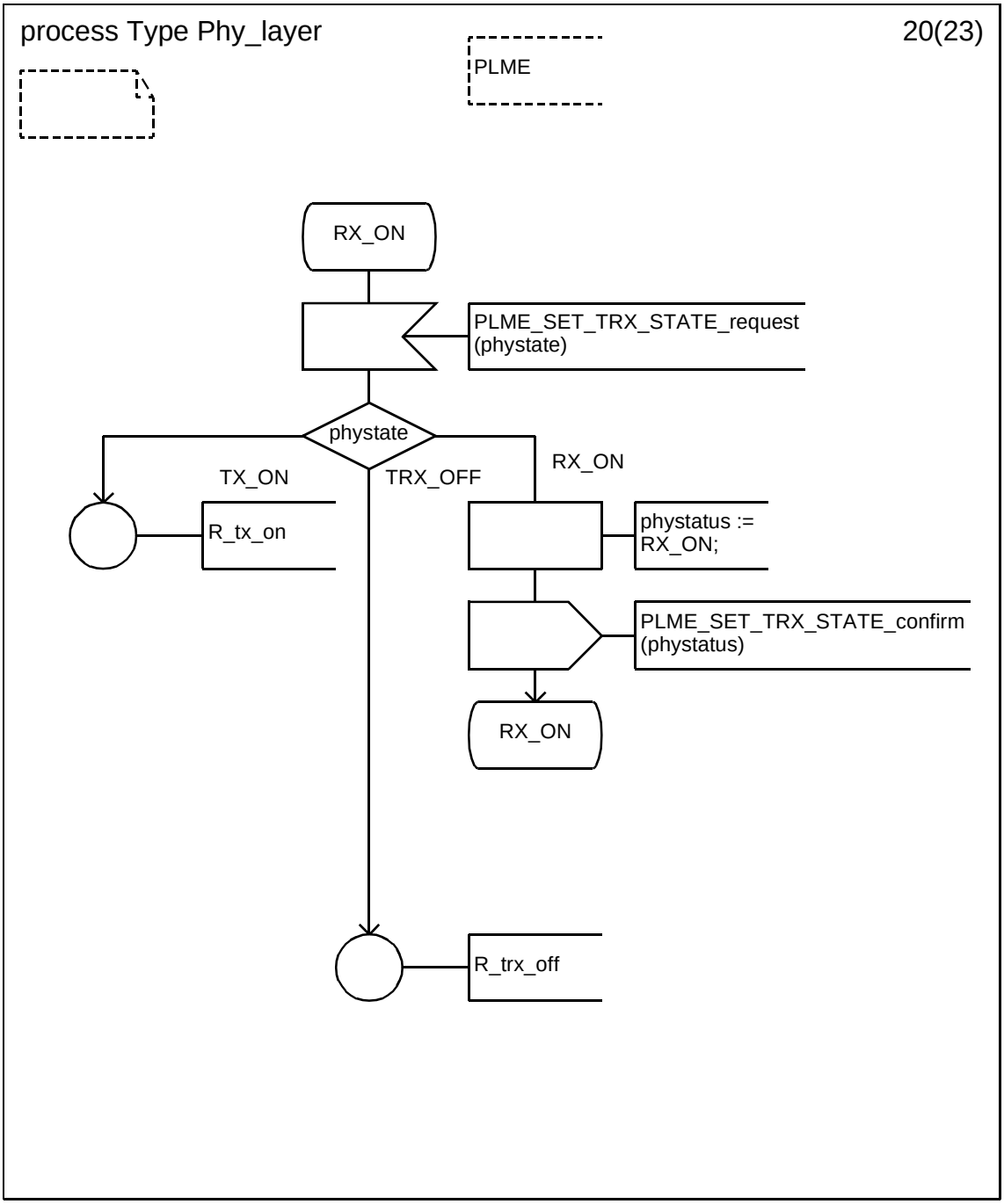


Copyright © 2003 IEEE. All rights reserved.

Authorized licensed use limited to: IEEE - Staff. Downloaded on October 28,2024 at 20:20:02 UTC from IEEE Xplore. Restrictions apply.

INTEL-1011
U.S. Patent 8,219,129

### D.2.1.21 Process type Phy_Layer (21)

.

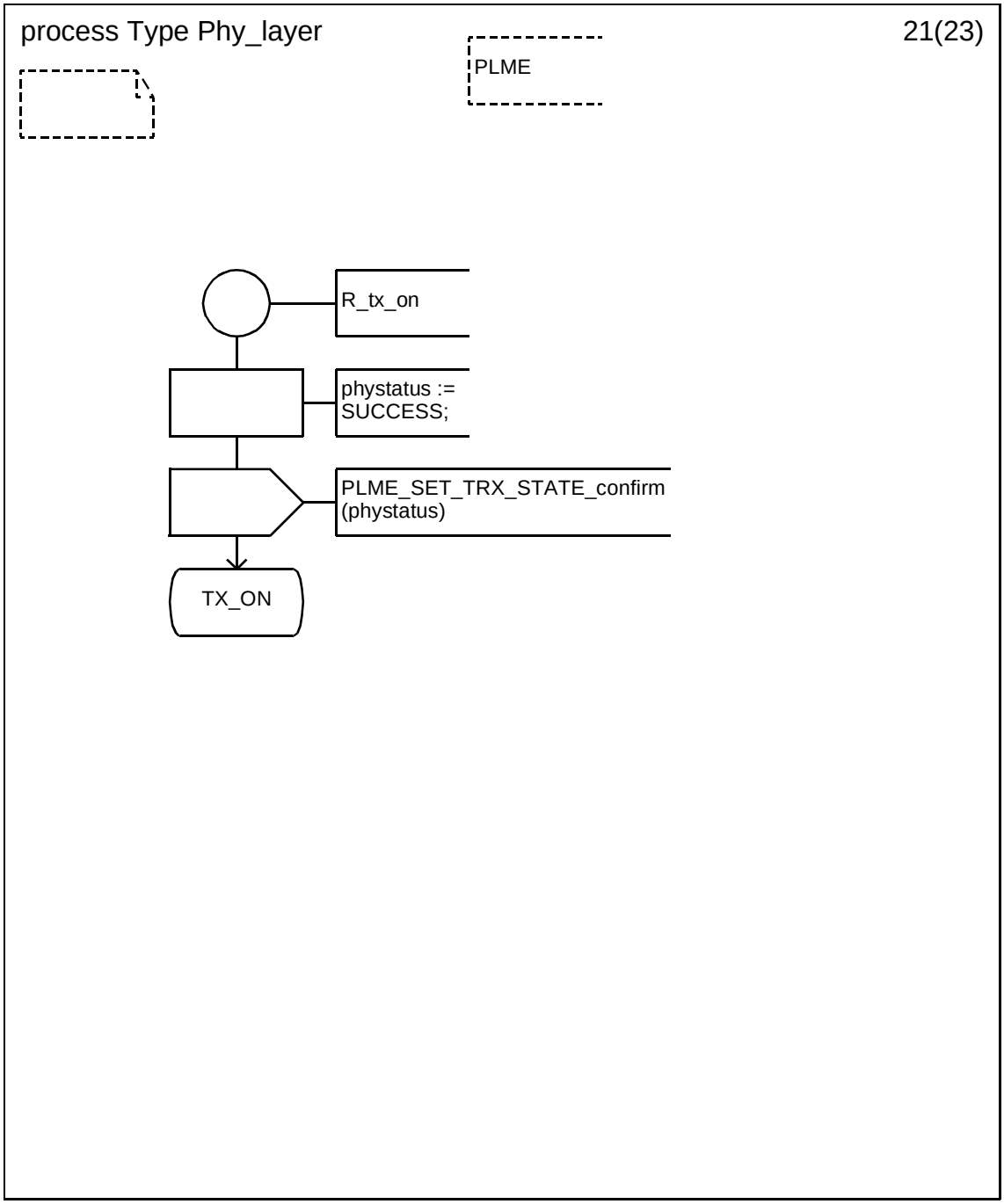



Copyright © 2003 IEEE. All rights reserved.
Authorized licensed use limited to: IEEE - Staff. Downloaded on October 28,2024 at 20:20:02 UTC from IEEE Xplore. Restrictions apply.

INTEL-1011
U.S. Patent 8,219,129

### D.2.1.22 Process type Phy_Layer (22)

.

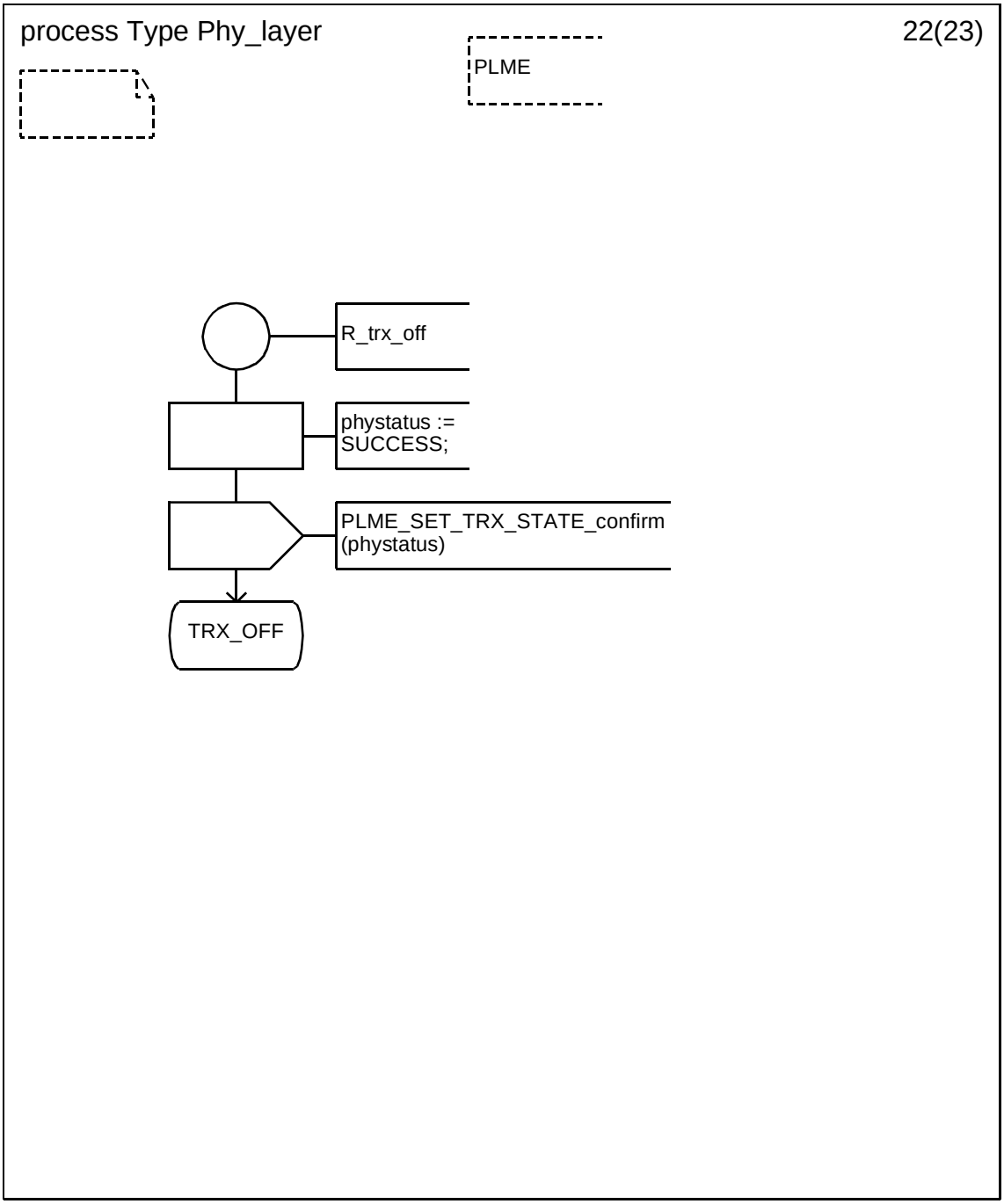


Copyright © 2003 IEEE. All rights reserved.

Authorized licensed use limited to: IEEE - Staff. Downloaded on October 28,2024 at 20:20:02 UTC from IEEE Xplore. Restrictions apply.

INTEL-1011
U.S. Patent 8,219,129

### D.2.1.23 Process type Phy_Layer (23)

.

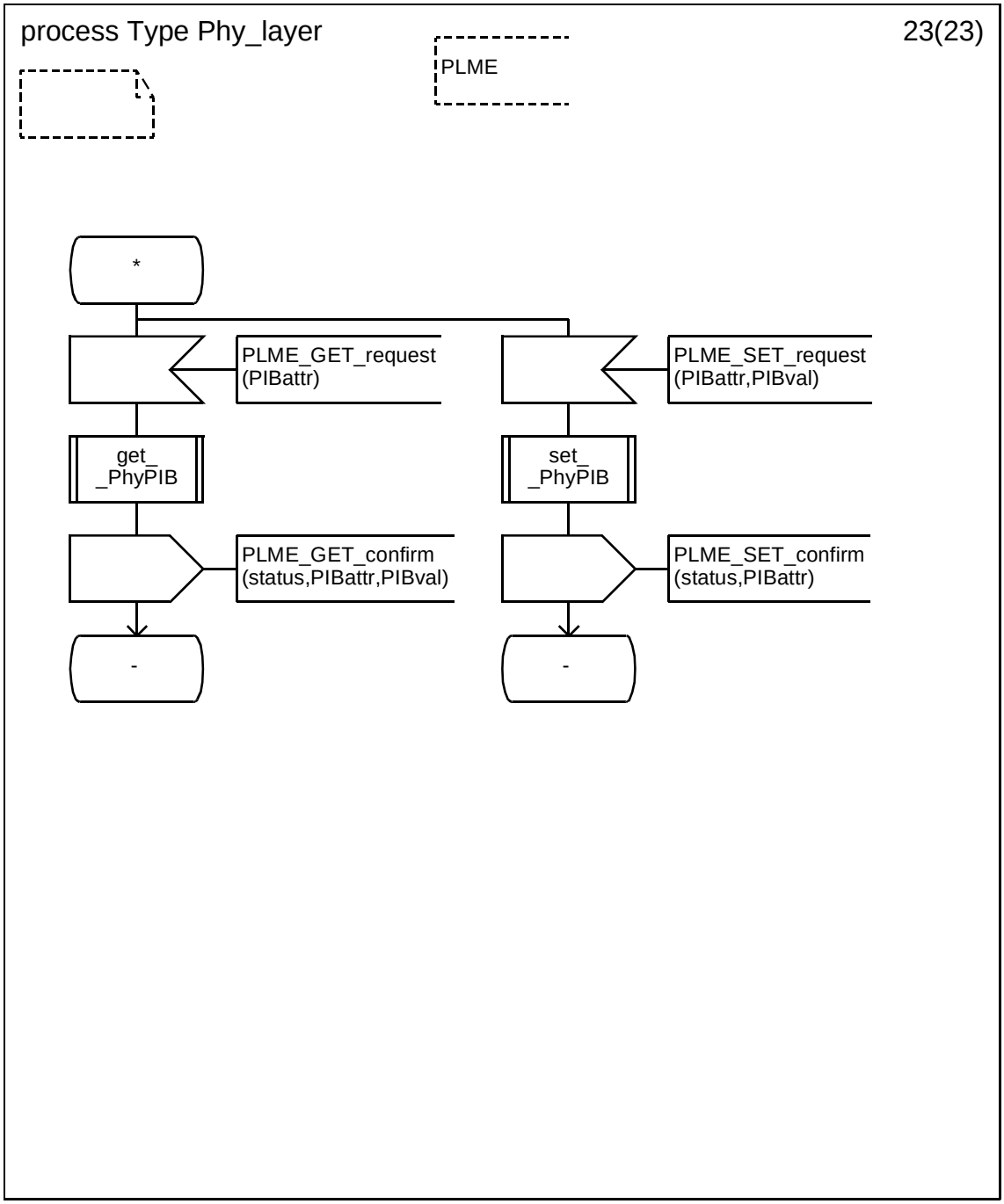



Copyright © 2003 IEEE. All rights reserved.
Authorized licensed use limited to: IEEE - Staff. Downloaded on October 28,2024 at 20:20:02 UTC from IEEE Xplore. Restrictions apply.

INTEL-1011
U.S. Patent 8,219,129

#### D.2.1.23.1 Procedure init_Phy_variables

.

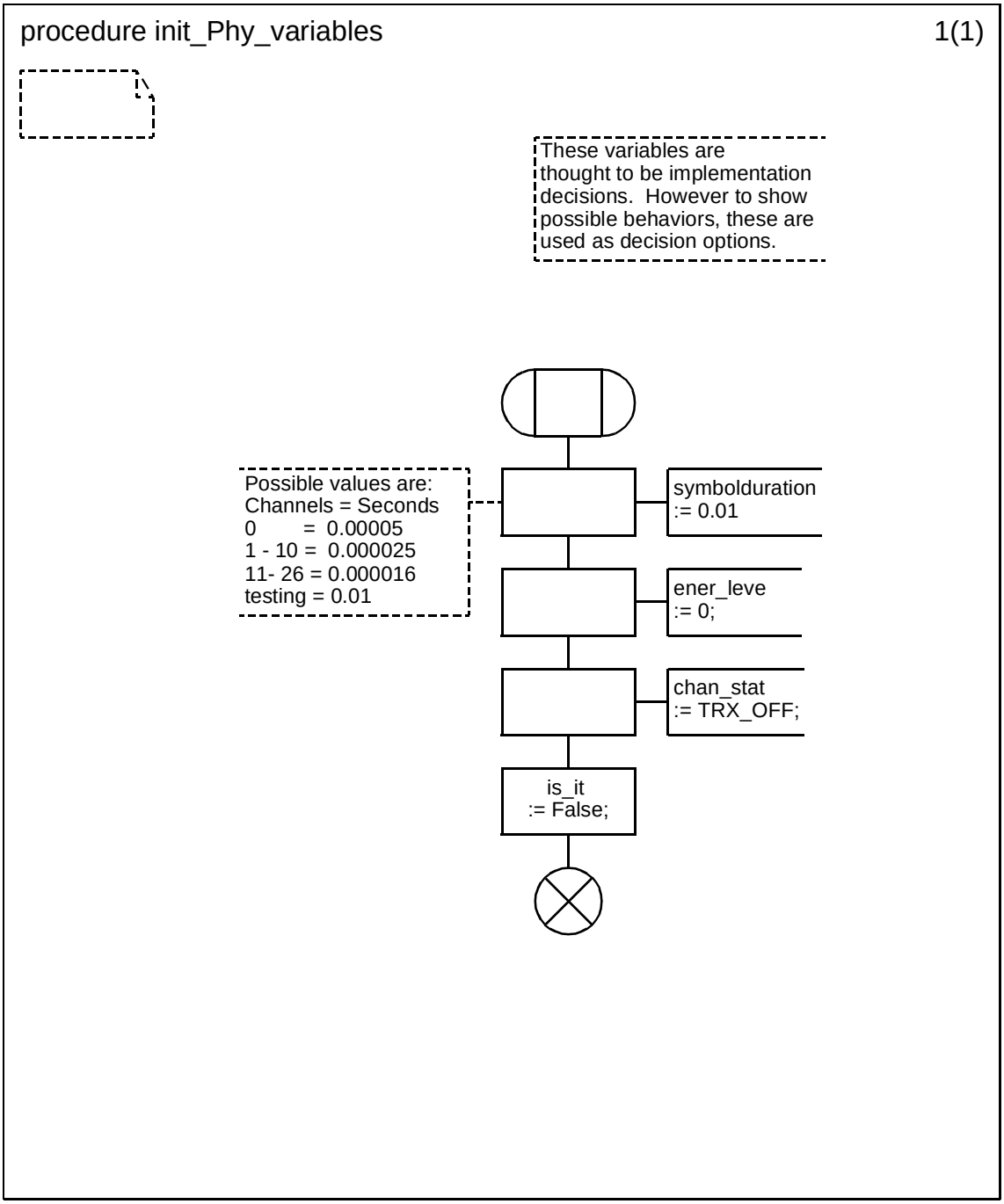


Copyright © 2003 IEEE. All rights reserved.

Authorized licensed use limited to: IEEE - Staff. Downloaded on October 28,2024 at 20:20:02 UTC from IEEE Xplore. Restrictions apply.

INTEL-1011
U.S. Patent 8,219,129

### D.2.1.23.2 Procedure init_PhyPIB (1)

.

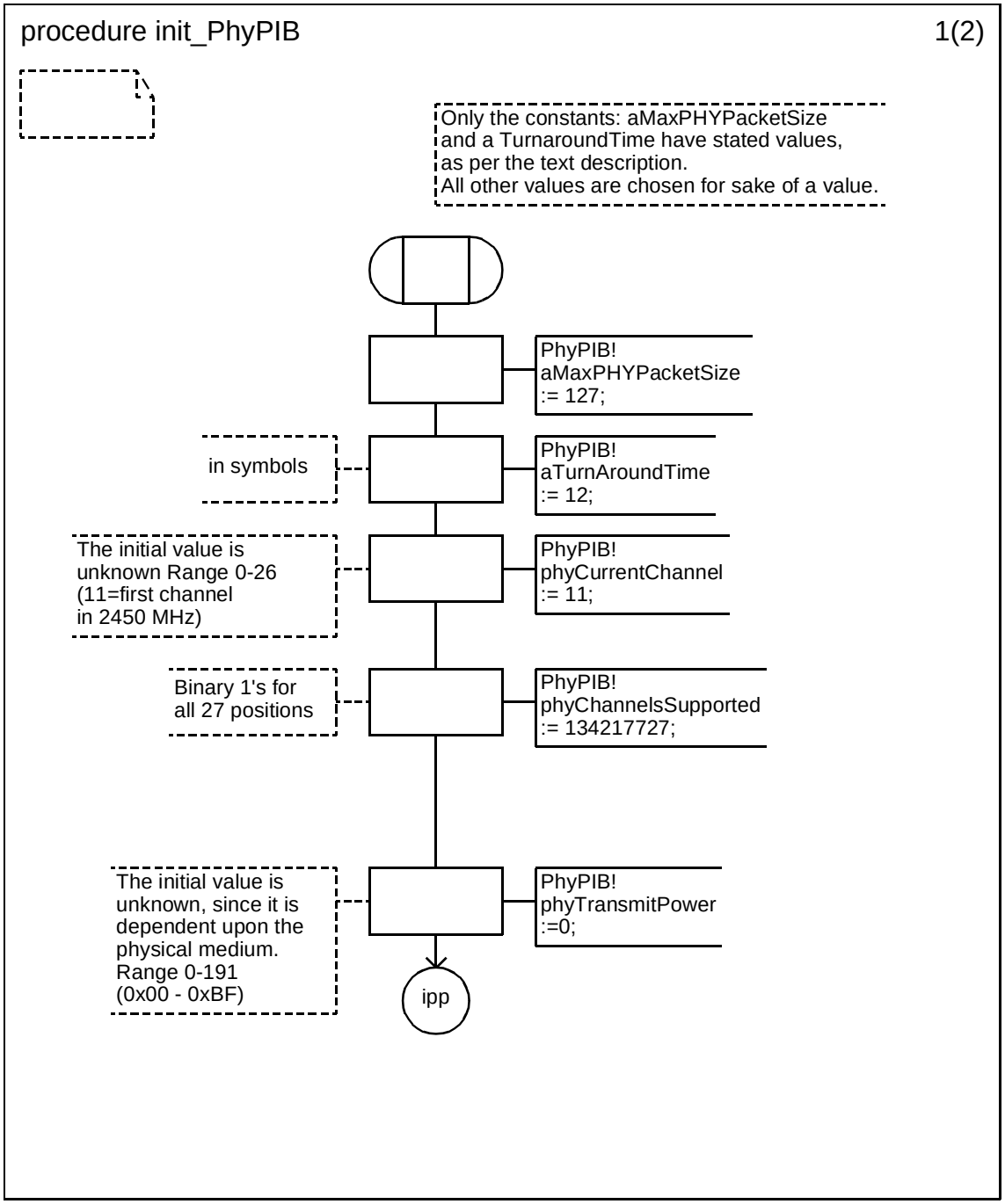



Copyright © 2003 IEEE. All rights reserved.
Authorized licensed use limited to: IEEE - Staff. Downloaded on October 28,2024 at 20:20:02 UTC from IEEE Xplore. Restrictions apply.

INTEL-1011
U.S. Patent 8,219,129

### D.2.1.23.3 Procedure init_PhyPIB (2)

.

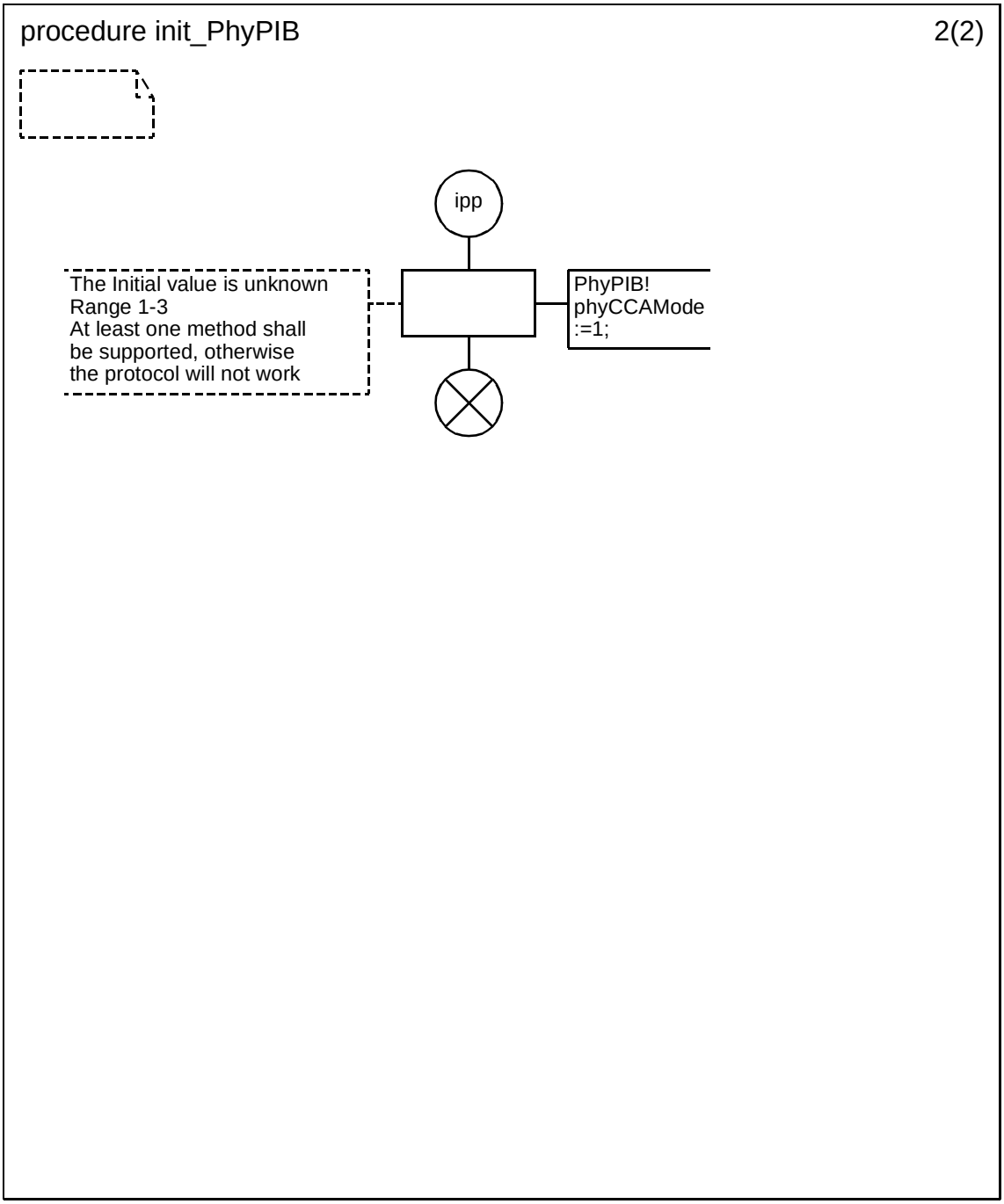


Copyright © 2003 IEEE. All rights reserved.

Authorized licensed use limited to: IEEE - Staff. Downloaded on October 28,2024 at 20:20:02 UTC from IEEE Xplore. Restrictions apply.

INTEL-1011
U.S. Patent 8,219,129

### D.2.1.23.4 Procedure parse_frame

.

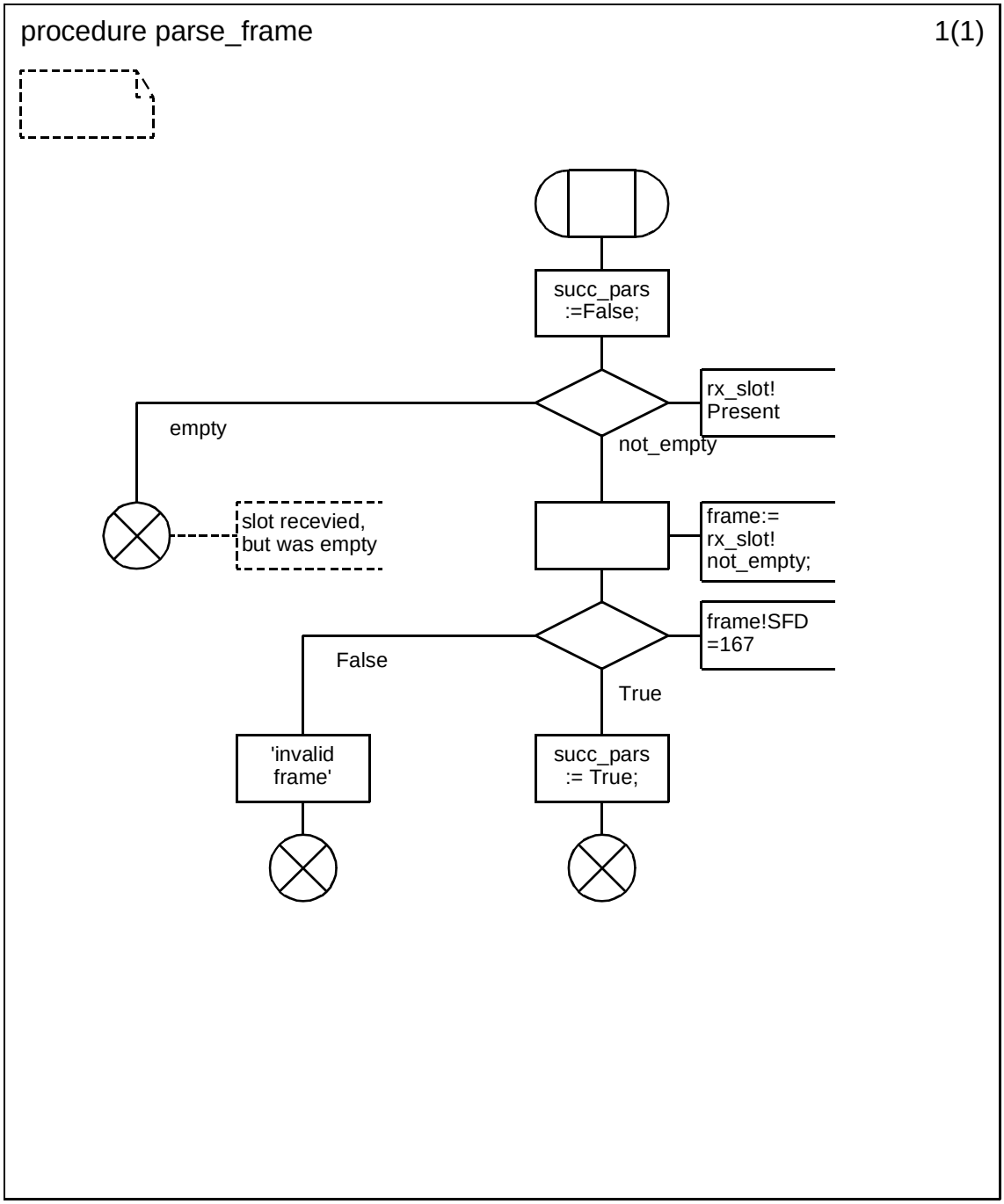



Copyright © 2003 IEEE. All rights reserved.
Authorized licensed use limited to: IEEE - Staff. Downloaded on October 28,2024 at 20:20:02 UTC from IEEE Xplore. Restrictions apply.

INTEL-1011
U.S. Patent 8,219,129

### D.2.1.23.5 Procedure construct_PPDU

.

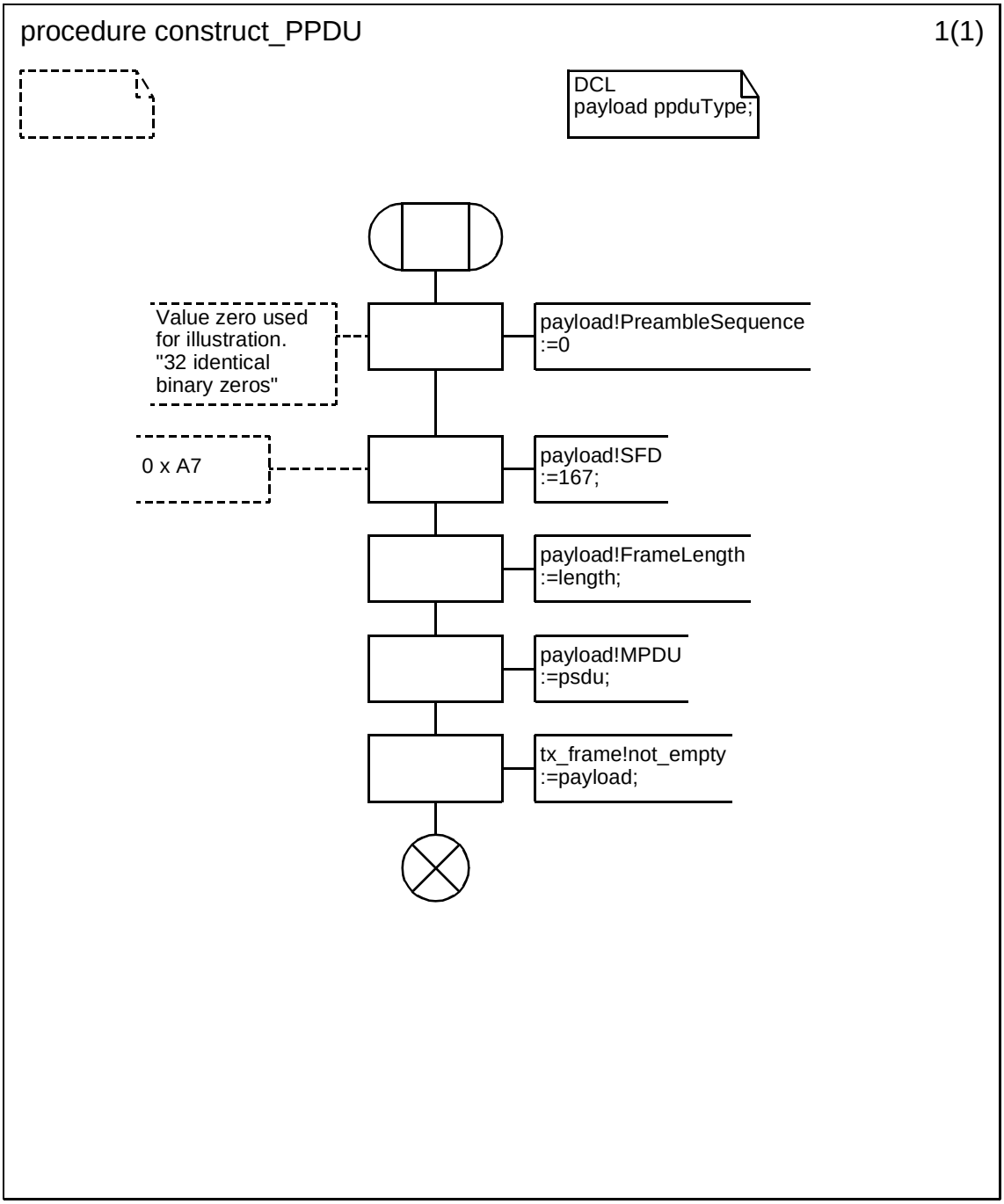


Copyright © 2003 IEEE. All rights reserved.

Authorized licensed use limited to: IEEE - Staff. Downloaded on October 28,2024 at 20:20:02 UTC from IEEE Xplore. Restrictions apply.

INTEL-1011
U.S. Patent 8,219,129

### D.2.1.23.6 Procedure get_PhyPIB (1)

.

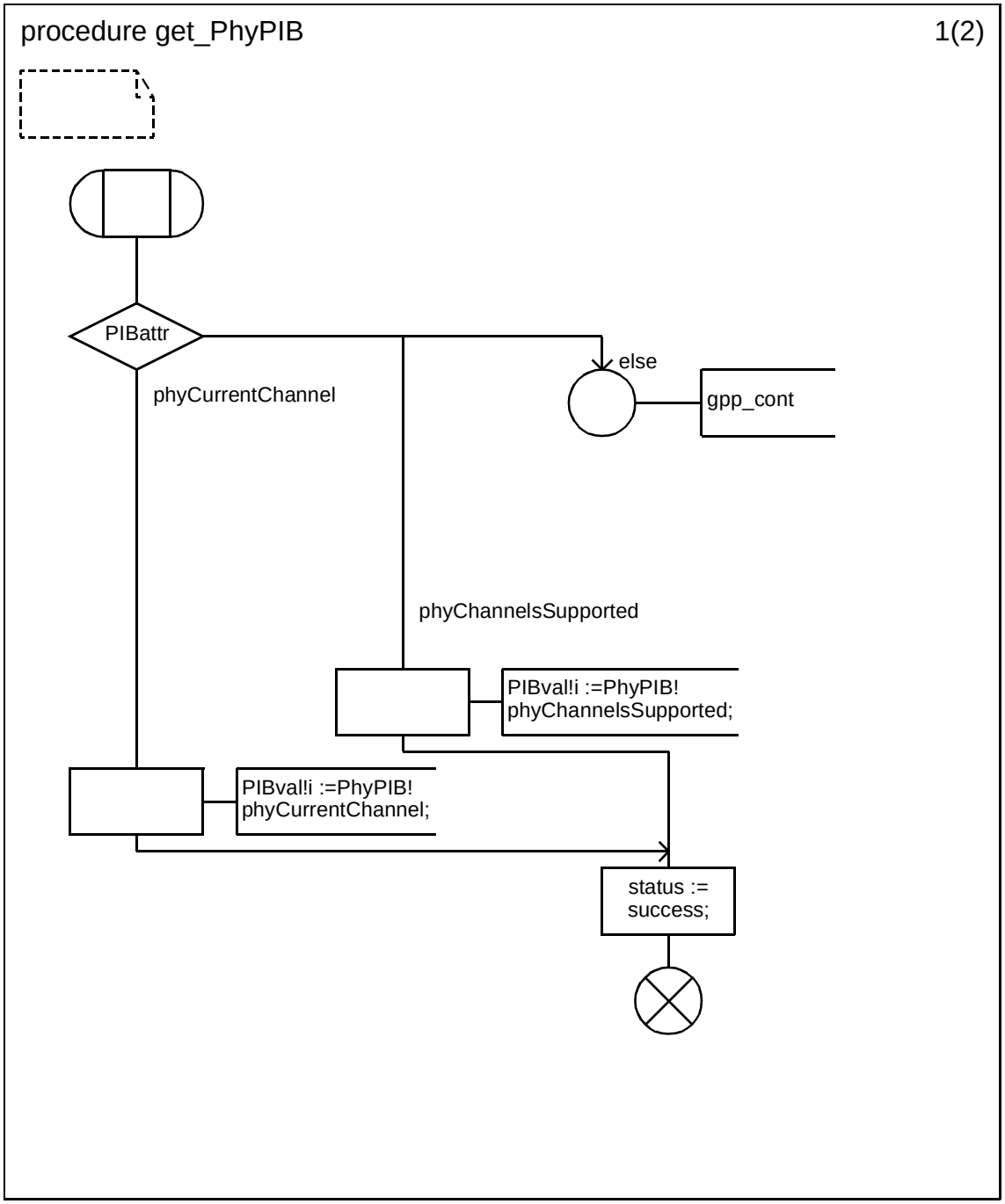



Copyright © 2003 IEEE. All rights reserved.
Authorized licensed use limited to: IEEE - Staff. Downloaded on October 28,2024 at 20:20:02 UTC from IEEE Xplore. Restrictions apply.

INTEL-1011
U.S. Patent 8,219,129

### D.2.1.23.7 Procedure get_PhyPIB (2)

.

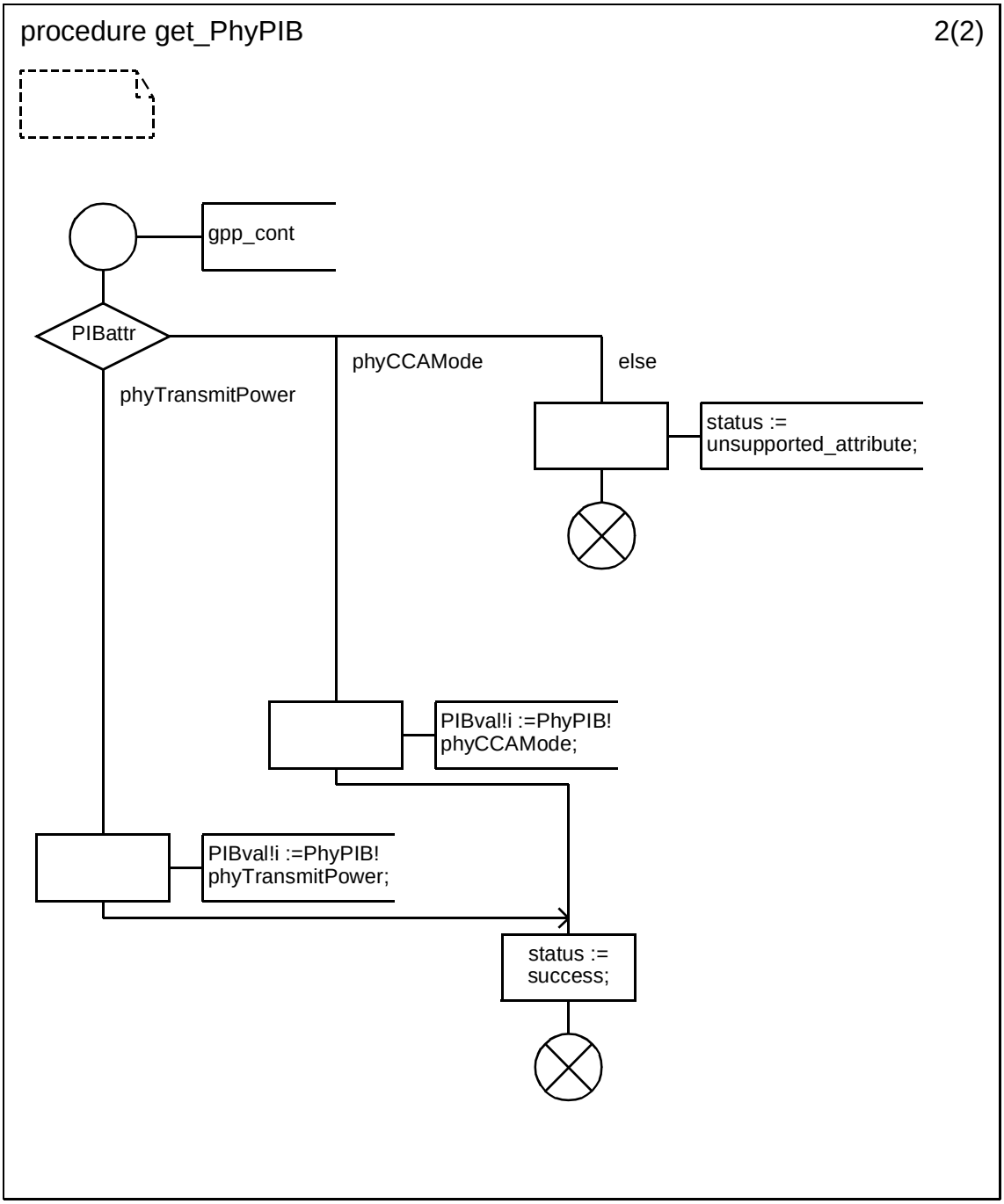


Copyright © 2003 IEEE. All rights reserved.

Authorized licensed use limited to: IEEE - Staff. Downloaded on October 28,2024 at 20:20:02 UTC from IEEE Xplore. Restrictions apply.

INTEL-1011
U.S. Patent 8,219,129

**D.2.1.23.8 Procedure set_PhyPIB (1)**

.

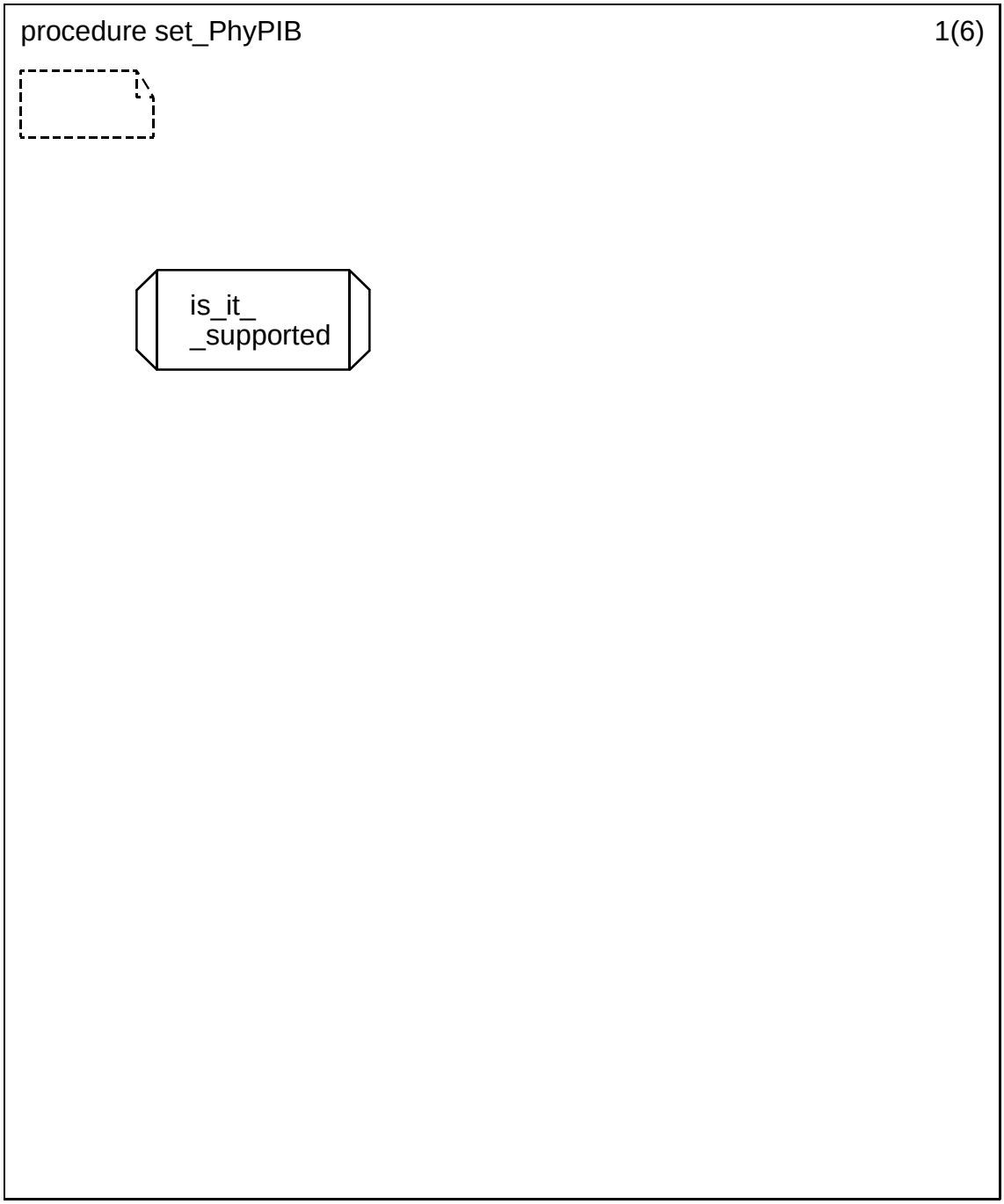



Copyright © 2003 IEEE. All rights reserved.
Authorized licensed use limited to: IEEE - Staff. Downloaded on October 28,2024 at 20:20:02 UTC from IEEE Xplore. Restrictions apply.

INTEL-1011
U.S. Patent 8,219,129

### D.2.1.23.9 Procedure set_PhyPIB (2)

.

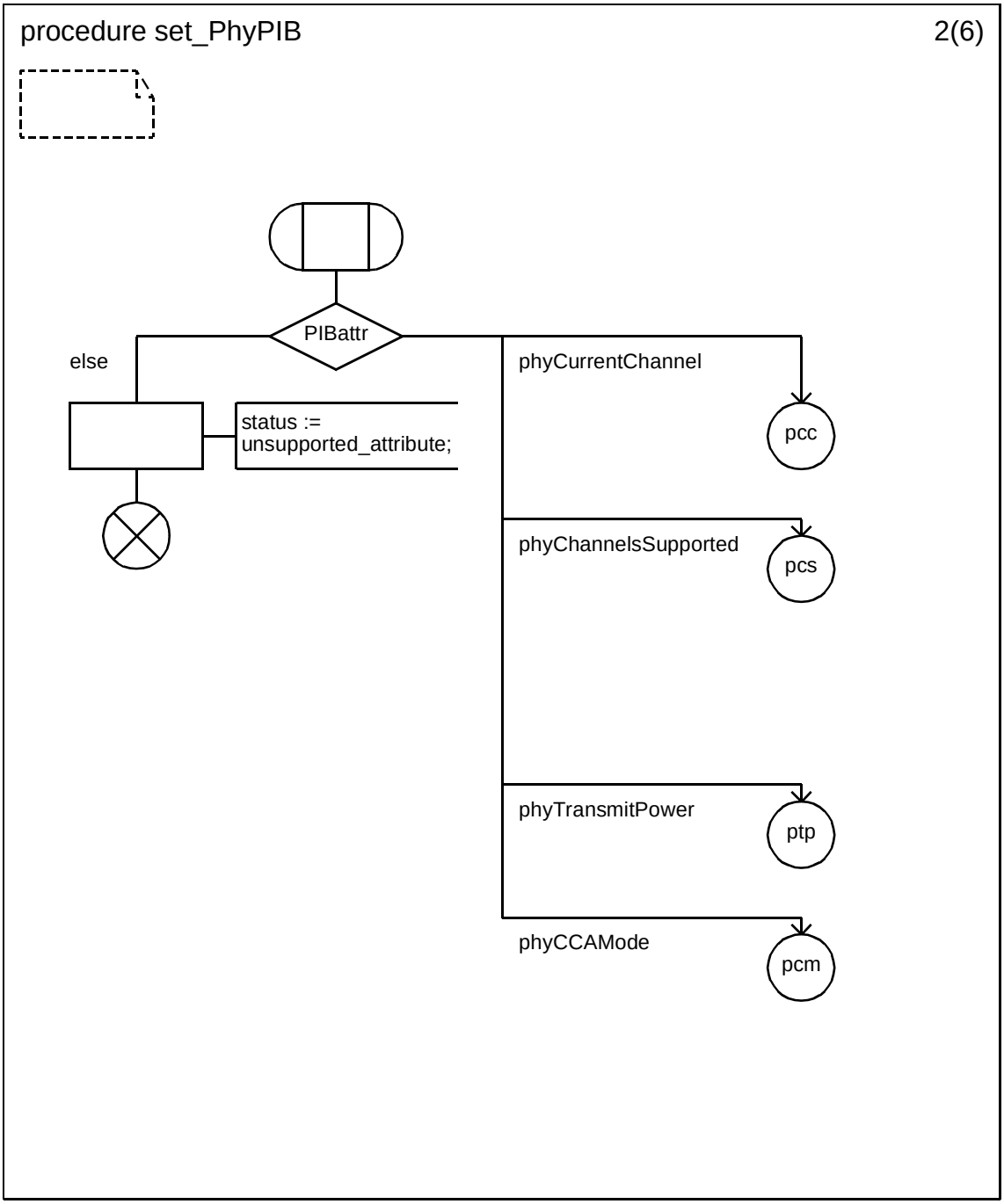


Copyright © 2003 IEEE. All rights reserved.

Authorized licensed use limited to: IEEE - Staff. Downloaded on October 28,2024 at 20:20:02 UTC from IEEE Xplore. Restrictions apply.

INTEL-1011
U.S. Patent 8,219,129

### D.2.1.23.10 Procedure set_PhyPIB (3)

.

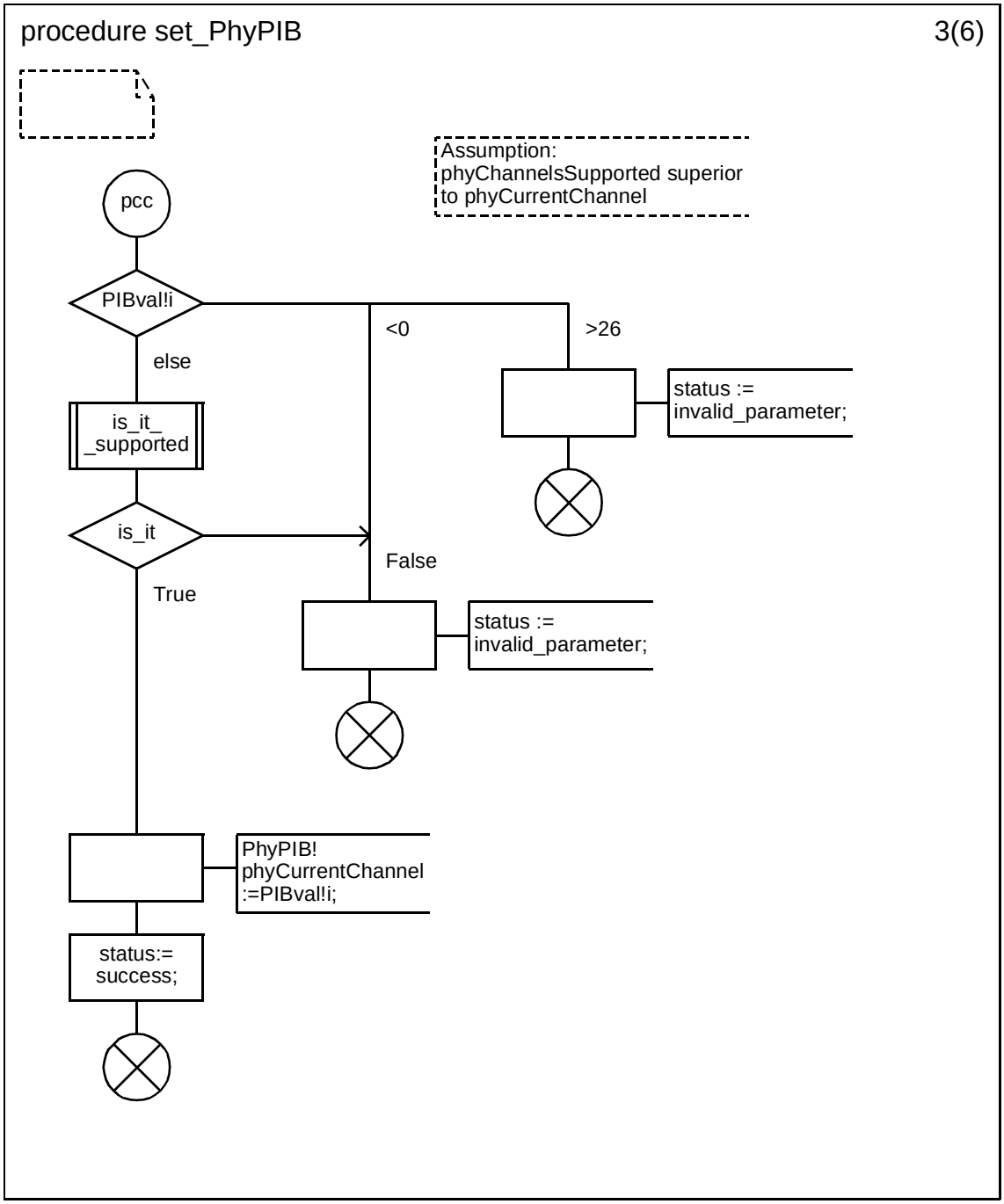



Copyright © 2003 IEEE. All rights reserved.
Authorized licensed use limited to: IEEE - Staff. Downloaded on October 28,2024 at 20:20:02 UTC from IEEE Xplore. Restrictions apply.

INTEL-1011
U.S. Patent 8,219,129

### D.2.1.23.11 Procedure set_PhyPIB (4)

.

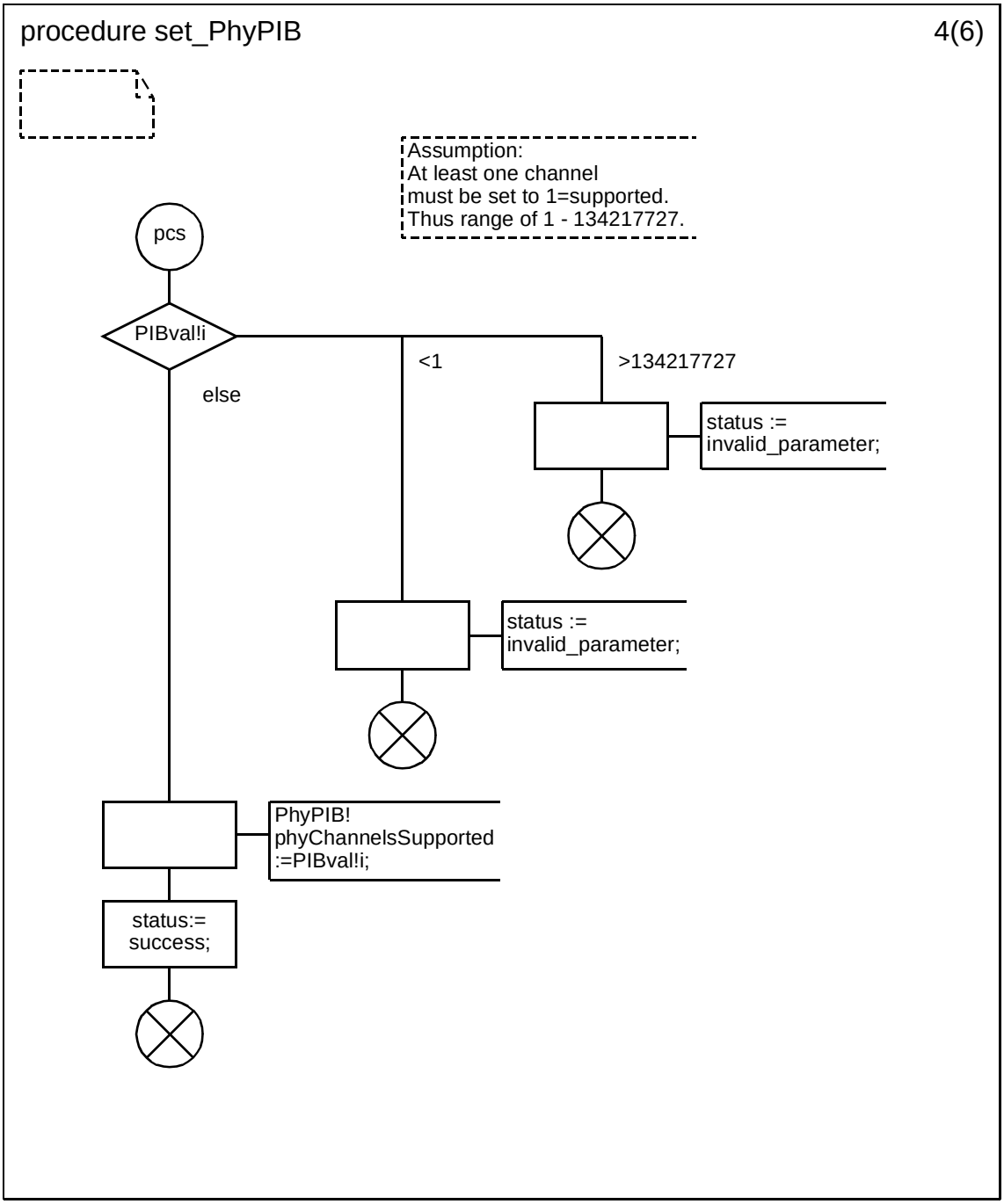


Copyright © 2003 IEEE. All rights reserved.

Authorized licensed use limited to: IEEE - Staff. Downloaded on October 28,2024 at 20:20:02 UTC from IEEE Xplore. Restrictions apply.

INTEL-1011
U.S. Patent 8,219,129

### D.2.1.23.12 Procedure set_PhyPIB (5)

.

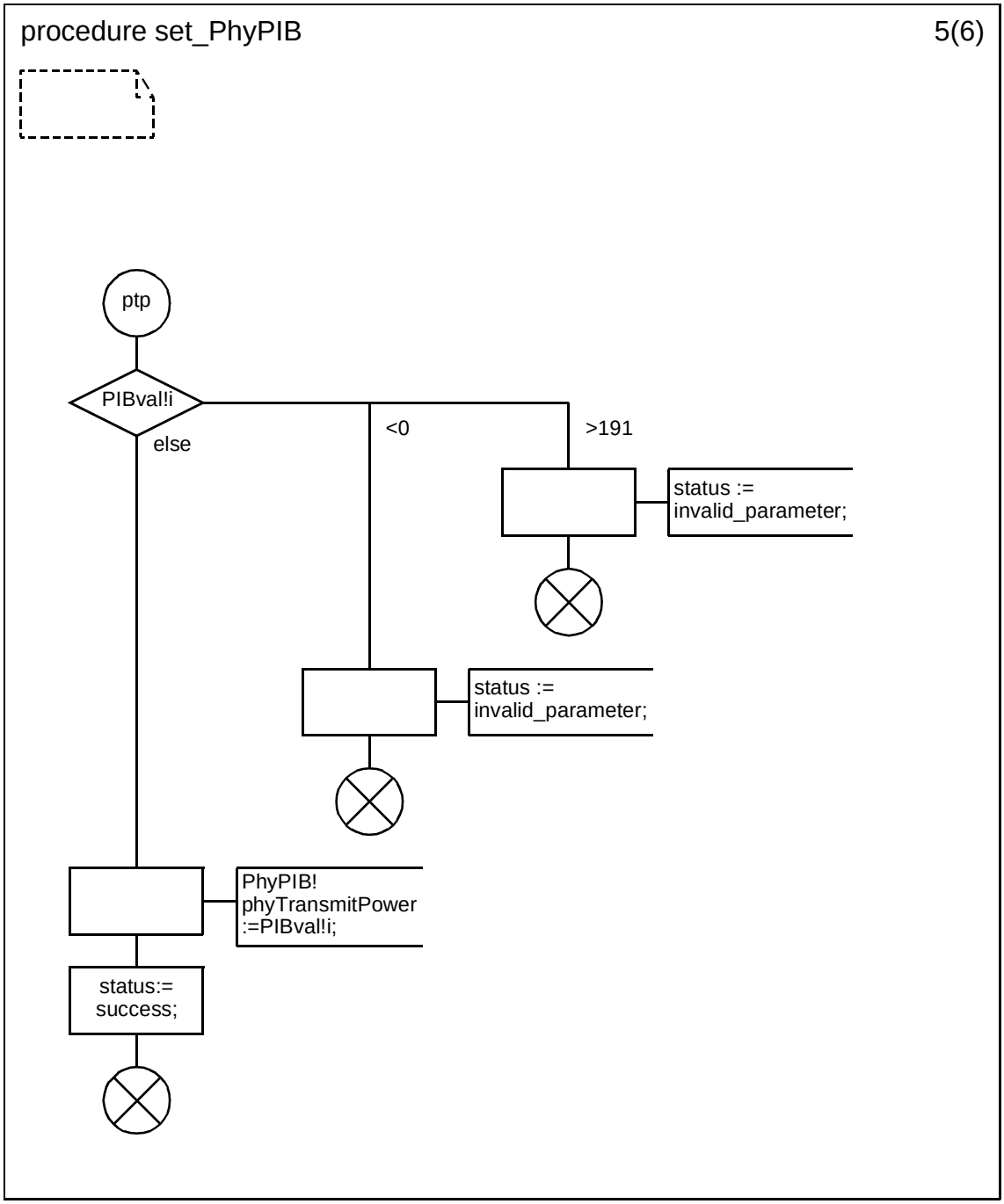



Copyright © 2003 IEEE. All rights reserved.
Authorized licensed use limited to: IEEE - Staff. Downloaded on October 28,2024 at 20:20:02 UTC from IEEE Xplore. Restrictions apply.

INTEL-1011
U.S. Patent 8,219,129

### D.2.1.23.13 Procedure set_PhyPIB (6)

.

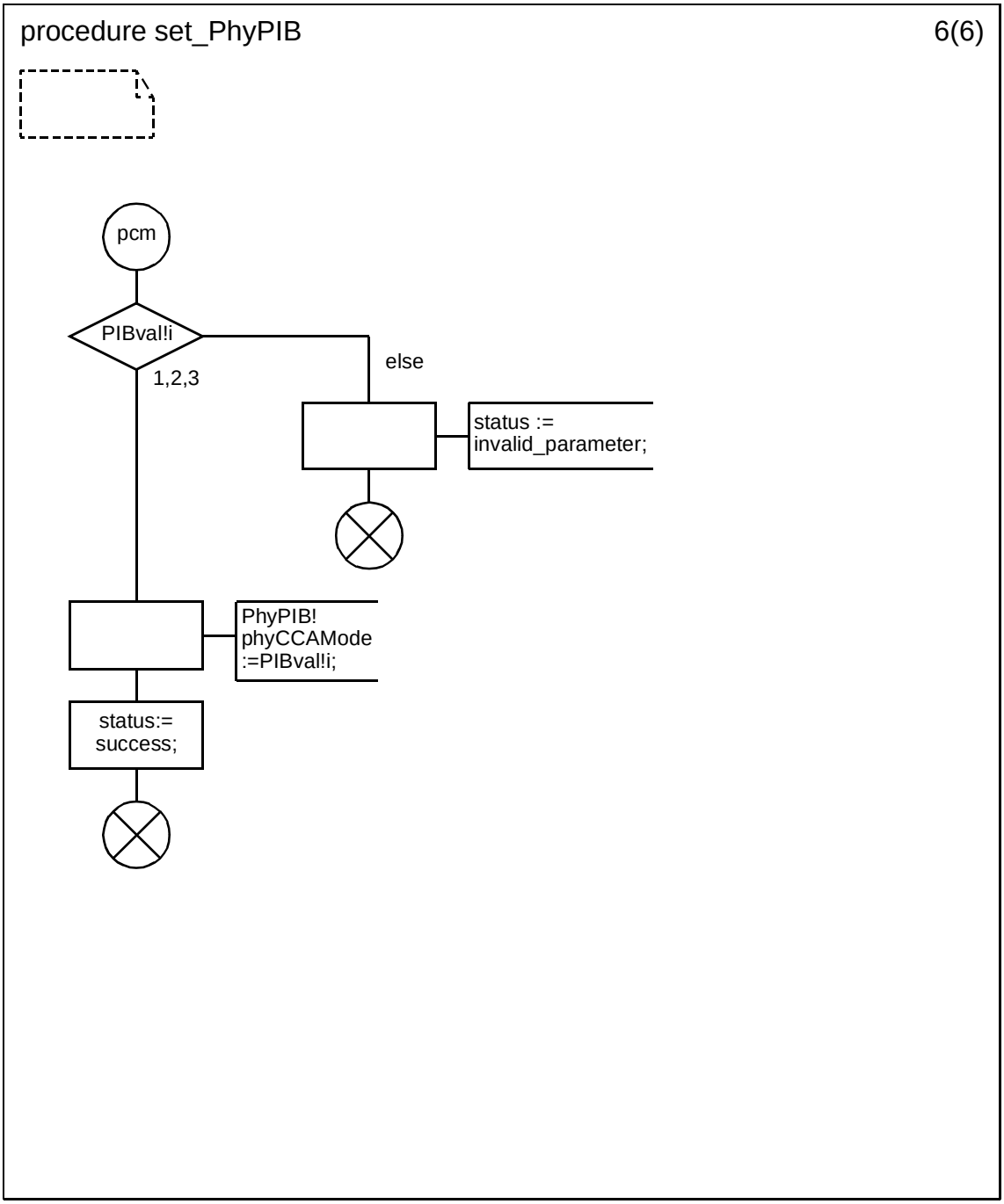


Copyright © 2003 IEEE. All rights reserved.

Authorized licensed use limited to: IEEE - Staff. Downloaded on October 28,2024 at 20:20:02 UTC from IEEE Xplore. Restrictions apply.

INTEL-1011
U.S. Patent 8,219,129

### D.2.1.23.13.1 Procedure is_it_supported

.

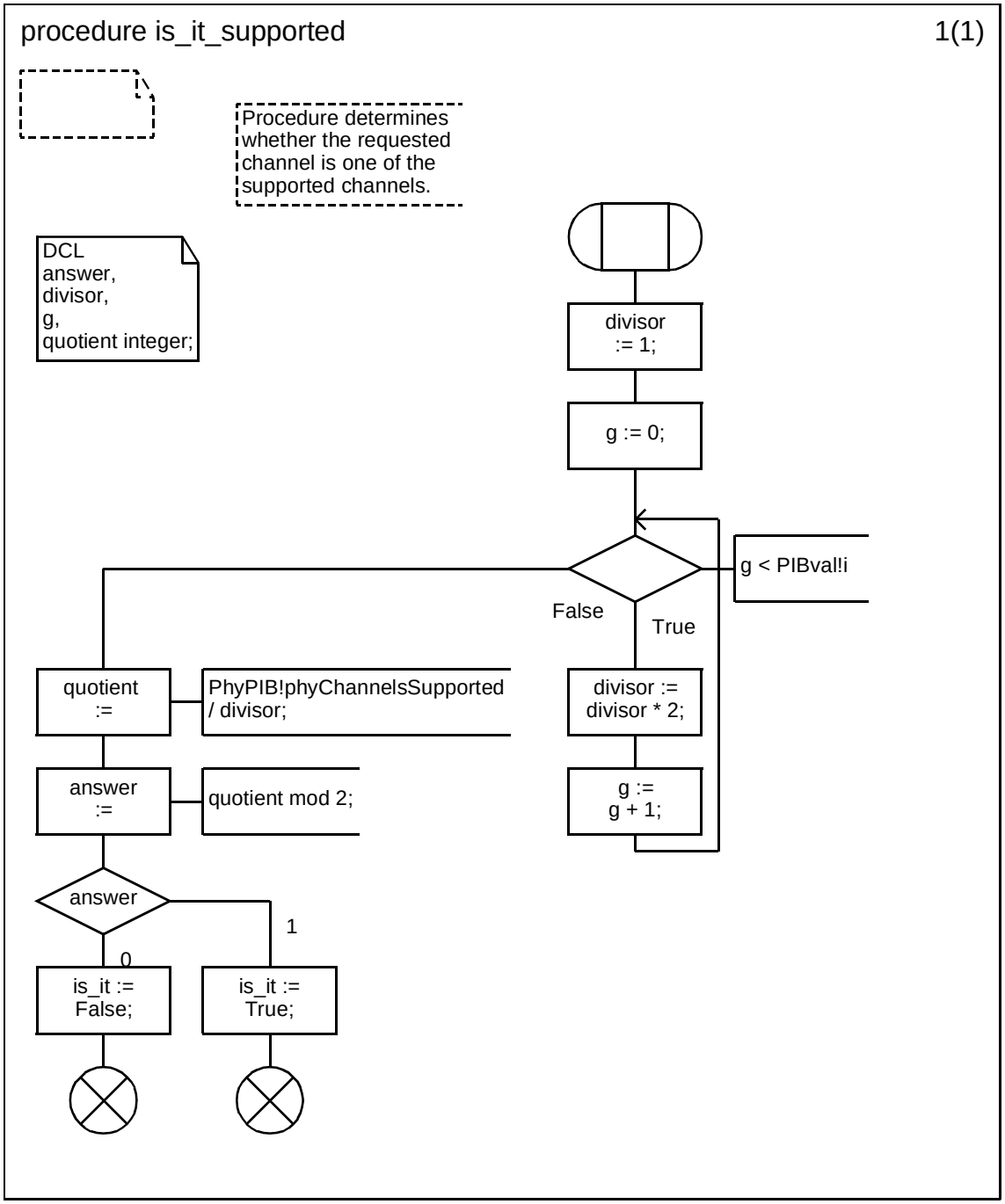



Copyright © 2003 IEEE. All rights reserved.
Authorized licensed use limited to: IEEE - Staff. Downloaded on October 28,2024 at 20:20:02 UTC from IEEE Xplore. Restrictions apply.

INTEL-1011
U.S. Patent 8,219,129

## D.3 IEEE 802.15.4 MAC sublayer package

.

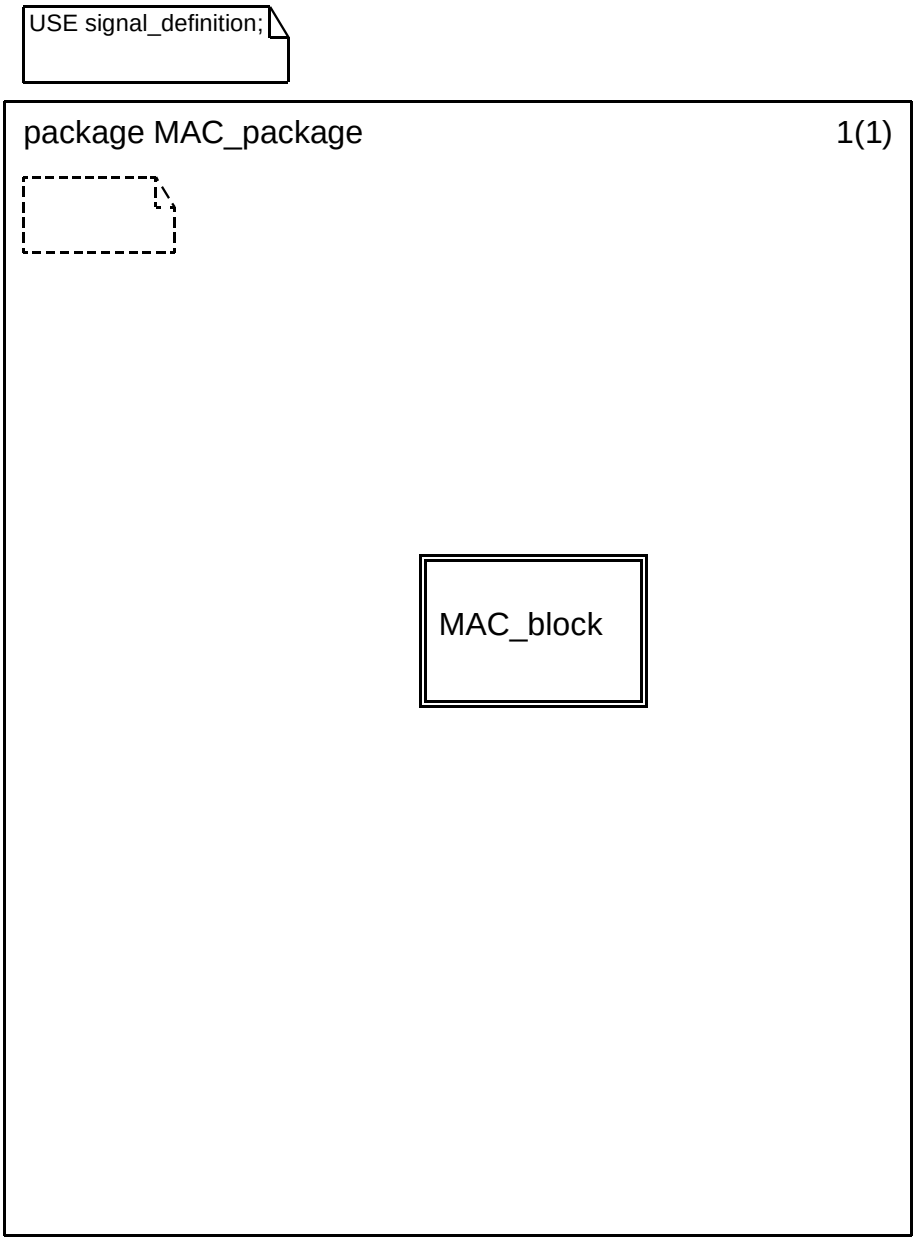


Copyright © 2003 IEEE. All rights reserved.

Authorized licensed use limited to: IEEE - Staff. Downloaded on October 28,2024 at 20:20:02 UTC from IEEE Xplore. Restrictions apply.

INTEL-1011
U.S. Patent 8,219,129

### D.3.1 Block type MAC_block

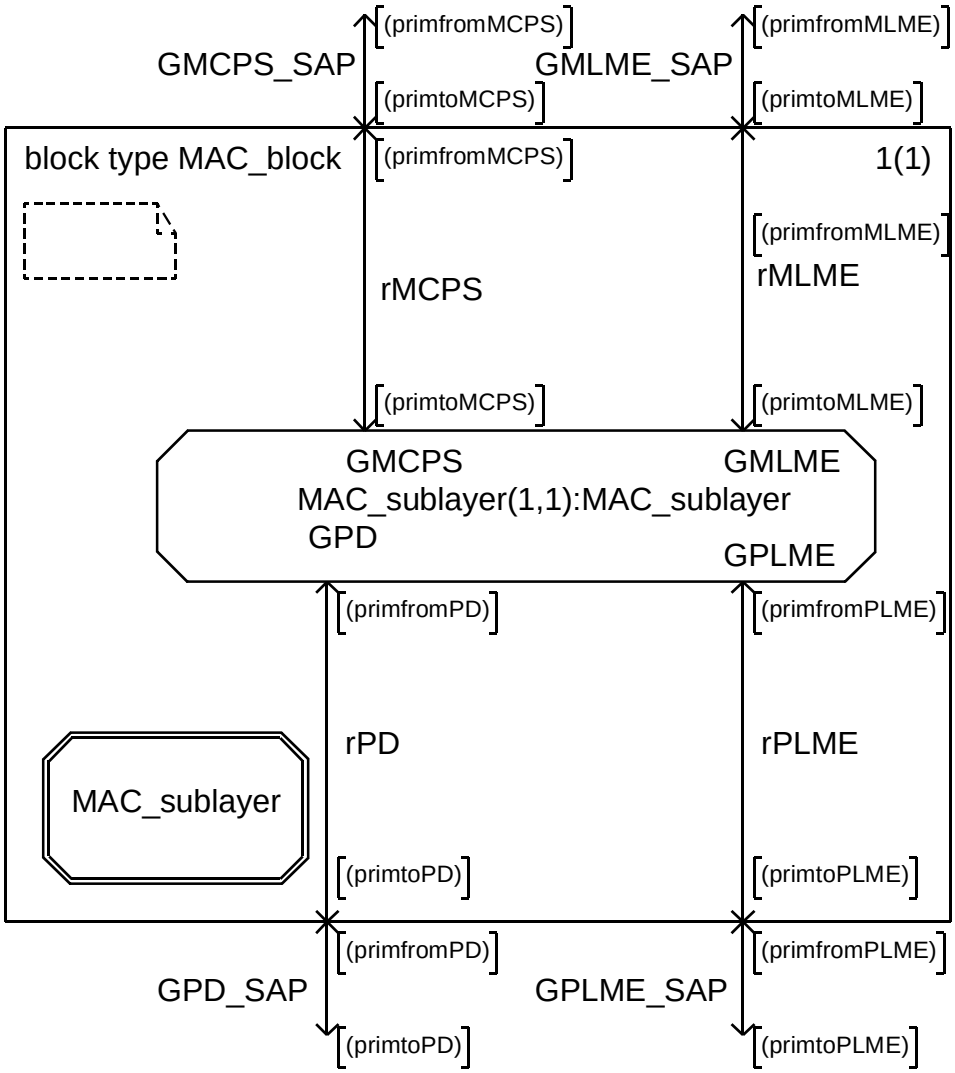



Copyright © 2003 IEEE. All rights reserved.
Authorized licensed use limited to: IEEE - Staff. Downloaded on October 28,2024 at 20:20:02 UTC from IEEE Xplore. Restrictions apply.

INTEL-1011
U.S. Patent 8,219,129

### D.3.1.1 Process type MAC_sublayer (1)

.

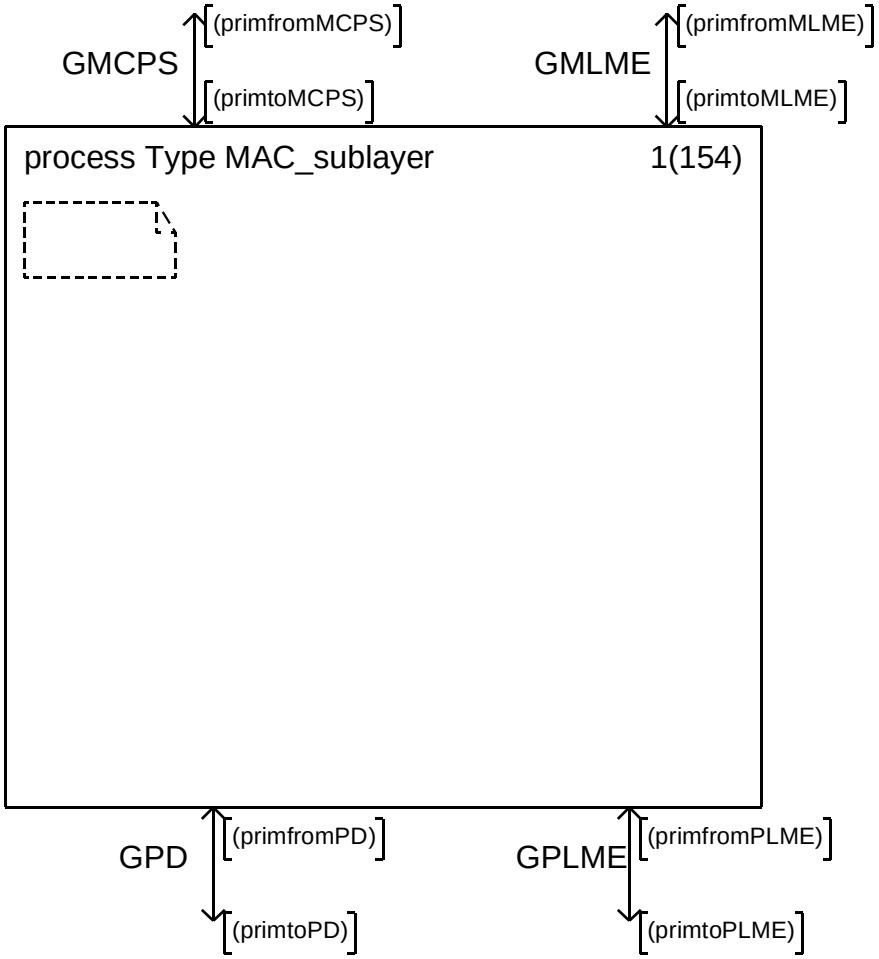


Copyright © 2003 IEEE. All rights reserved.

Authorized licensed use limited to: IEEE - Staff. Downloaded on October 28,2024 at 20:20:02 UTC from IEEE Xplore. Restrictions apply.

INTEL-1011
U.S. Patent 8,219,129

### D.3.1.2 Process type MAC_sublayer (2)

.

process Type MAC_sublayer 2(154)

```
DCL
ack_received,
AssocMember,
Beacon_enabled_PAN,
beacon_request,
ble,
broadcast,
co_re,
decode_successful,
findabeacon,
findacoordinator_realignment,
FFD_device,
GTSCapability,
InACL,
key_found,
msdu_found,
notcorrect,
PANCoordinator,
passed,
PHY_in_TX,
r_acle,
r_sec,
sec_proc,
SecurityEnable,
SetDefaultPIB,
TrackBeacon,
too_late,
too_long,
will_fit            Boolean;
```

```
DCL
symbolduration,
totaltime duration;
```

```
TIMER
T_AckWait,
T_backoff,
T_beacon,
T_btp,
T_defertime,
T_MaxFrameResponseTime,
T_ResponseWaitTime,
T_RxOnTime,
T_scan_duration,
T_superframe;
```


Copyright © 2003 IEEE. All rights reserved.
Authorized licensed use limited to: IEEE - Staff. Downloaded on October 28,2024 at 20:20:02 UTC from IEEE Xplore. Restrictions apply.

INTEL-1011
U.S. Patent 8,219,129

### D.3.1.3 Process type MAC_sublayer (3)

.

process Type MAC_sublayer 3(154)

```
DCL
AssocDevAddr,
BE,
beaconOrder,
cam,
clc,
cpid,
co_PID,
co_shortaddr,
current_channel,
CW,
dam,
data_request,
RxOnTime,
DisassociateReason,
dpid,
etbd,
iPANcoordinator,
length,
missed_beacons,
ml,
mlq,
NB,
num_GTSs,
num_of_backoffs,
numCommFailures,
numPend,
original_channel,
PANID,
resultlistsize,
r_sn,
r_dam,
r_dpid,
r_sam,
r_spid,
RxOnDuration,
sam,
spid,
statA,
strength,
SuperframeOrder     Integer;
```

Copyright © 2003 IEEE. All rights reserved.

Authorized licensed use limited to: IEEE - Staff. Downloaded on October 28,2024 at 20:20:02 UTC from IEEE Xplore. Restrictions apply.

INTEL-1011
U.S. Patent 8,219,129

### D.3.1.4 Process type MAC_sublayer (4)

.

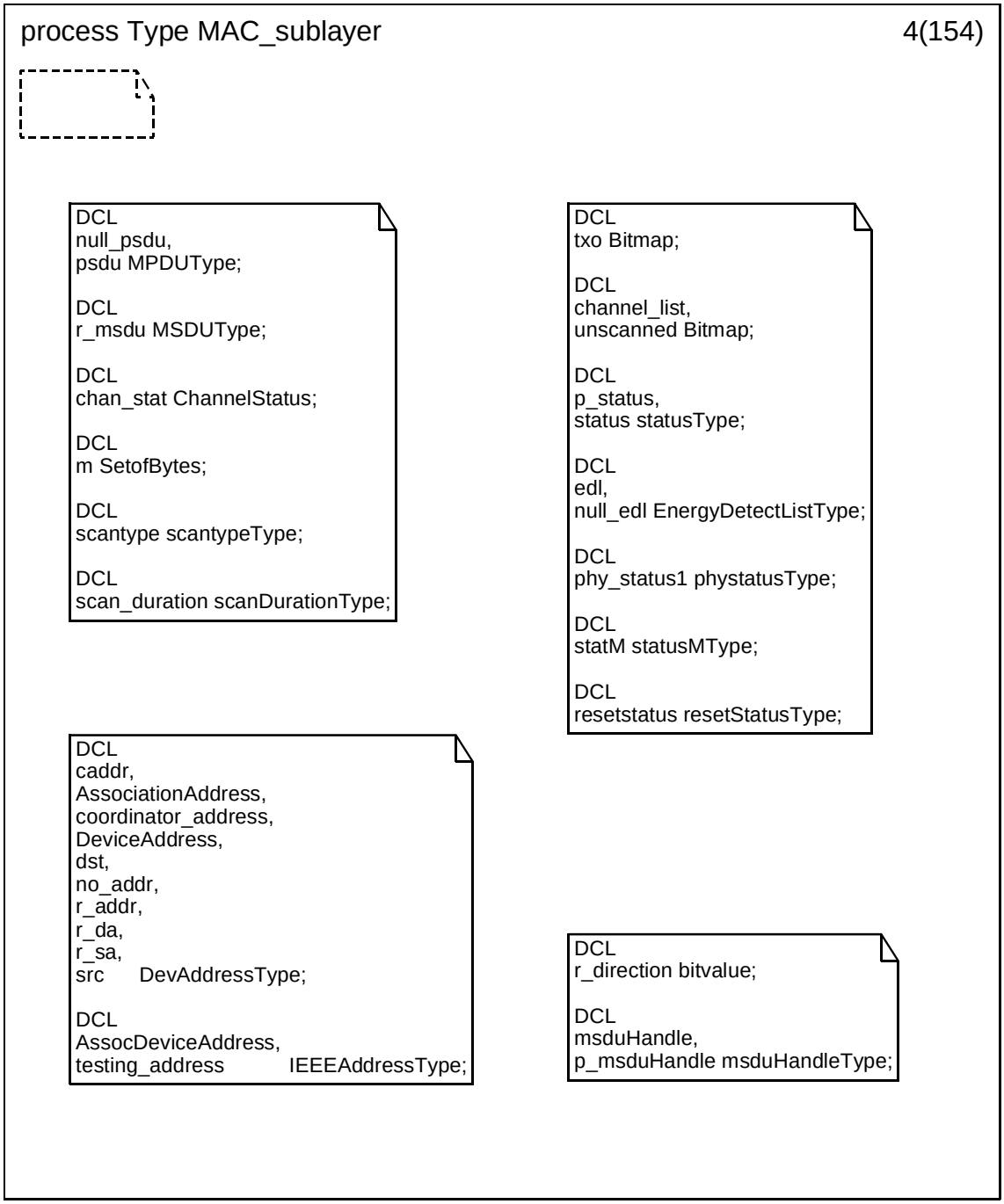



Copyright © 2003 IEEE. All rights reserved.
Authorized licensed use limited to: IEEE - Staff. Downloaded on October 28,2024 at 20:20:02 UTC from IEEE Xplore. Restrictions apply.

INTEL-1011
U.S. Patent 8,219,129

### D.3.1.5 Process type MAC_sublayer (5)

.

process Type MAC_sublayer 5(154)

```
DCL
message,
message2,
p_message messageType;
```

```
DCL
original_state nameofstate;
```

```
Newtype nameofstate
literals
   W,
   X_as,
   X_as1,
   X_os,
   X_os1,
   X_ps,
   Ya,
   Za,
   Zp,
   A,
   B,
   C,
   D,
   E,
   F,
   G,
   H;
endnewtype nameofstate;
```

```
DCL
r_fc FrameControlType;

DCL
r_MHR addressMHRType;

DCL
CapabilityInformation Bitmap;

DCL
BPID BPIDType;

DCL
xchannel ChannelType;

DCL
ener_leve EnergyLevel;

DCL
PANDescriptorset,
null_PANDescriptorSet PANDescriptorSetType;

DCL
phystate phystateType;

DCL
LossReason LossReasonType;

DCL
PTL PendingTransactionListType;

DCL
r_PANDescriptor PANDescriptorType;
```

Copyright © 2003 IEEE. All rights reserved.

Authorized licensed use limited to: IEEE - Staff. Downloaded on October 28,2024 at 20:20:02 UTC from IEEE Xplore. Restrictions apply.

INTEL-1011
U.S. Patent 8,219,129

### D.3.1.6 Process type MAC_sublayer (6)

process Type MAC_sublayer 6(154)

GTS related information

```
DCL
GTSId,
GTSspecification,
s_GTSstatus,
s_GTSss,
s_GTSln,
request_type,
s_GTSId,
CAP_length    Integer;

DCL
GTSChar GTSCharacteristicsType;

DCL
GTS_db GTSinfoType;
```

```
newtype GTSinfoEntryType
struct
    GTSId integer;
    starting_slot integer;
    length integer;
    direction bitvalue;
    saddr DevAddressType;
endnewtype GTSinfoEntryType;

newtype GTSinfoType
  array (integer,GTSinfoEntryType)
endnewtype GTSinfoType;
```


Copyright © 2003 IEEE. All rights reserved.
Authorized licensed use limited to: IEEE - Staff. Downloaded on October 28,2024 at 20:20:02 UTC from IEEE Xplore. Restrictions apply.

INTEL-1011
U.S. Patent 8,219,129

### D.3.1.7 Process type MAC_sublayer (7)

.

process Type MAC_sublayer 7(154)

MAC constants

```
Newtype MacConType
 struct
  aBaseSlotDuration integer;
  aBaseSuperframeDuration integer;
  aExtendedAddress IEEEAddressType;
  aMinLIFSPeriod integer;
  aMaxBE integer;
  aMaxBeaconOverhead integer;
  aMaxBeaconPayloadLength integer;
  aMaxCommunicationsFailures integer;
  aMaxFrameOverhead integer;
  aMaxFrameResponseTime integer;
  aMaxFrameRetries integer;
  aMaxLostBeacons integer;
  aMaxMACFrameSize integer;
  aMaxSIFSFrameSize integer;
  aMinCAPLength integer;
  aNumSuperframeSlots integer;
  aResponseWaitTime integer;
  aMinSIFSPeriod integer;
  aSuperframesBeforeSnooze integer;
  aUnitBackoffPeriod integer;
  MaxPHYPacketSize integer;
endnewtype MacConType;
```

A number of contants
have been changed to
SDL duration or real,
instead of integer.
This is to directly use
the SDL Time and Duration
features.

Copyright © 2003 IEEE. All rights reserved.

Authorized licensed use limited to: IEEE - Staff. Downloaded on October 28,2024 at 20:20:02 UTC from IEEE Xplore. Restrictions apply.

INTEL-1011
U.S. Patent 8,219,129

### D.3.1.8 Process type MAC_sublayer (8)

.

process Type MAC_sublayer 8(154)

MAC PIB

```
Newtype MacPIBType
 struct
  macAckWaitDuration integer;
  macAssociationPermit boolean;
  macAutoRequest boolean;
  macBattLifeExt boolean;
  macBeaconPayload integer;
  macBeaconPayloadLength integer;
  macBeaconOrder integer;
  macBeaconTxTime Time;
  macBSN integer;
  macCoordShortAddress integer;
  macCoordExtendedAddress IEEEAddressType;
  macDSN integer;
  macMaxCSMABackoffs integer;
  macMinBE integer;
  macPANId integer;
  macPromiscuousMode boolean;
  macRxGTSId integer;
  macRxOnWhenIdle boolean;
  macShortAddress integer;
  macSuperframeOrder integer;
  macTransactionPersistenceTime integer;
  macTxGTSId integer;

  macACLEntryDescriptorSet ACLEntryDescriptorElementType;
  macACLEntryDescriptorSetSize integer;
  macDefaultSecurity boolean;
  macACLDefaultSecurityMaterialLength integer;
  macDefaultSecurityMaterial integer;
  macDefaultSecuritySuite integer;
  macSecurityMode integer;
endnewtype MacPIBType;
```


Copyright © 2003 IEEE. All rights reserved.
Authorized licensed use limited to: IEEE - Staff. Downloaded on October 28,2024 at 20:20:02 UTC from IEEE Xplore. Restrictions apply.

INTEL-1011
U.S. Patent 8,219,129

### D.3.1.9 Process type MAC_sublayer (9)

.

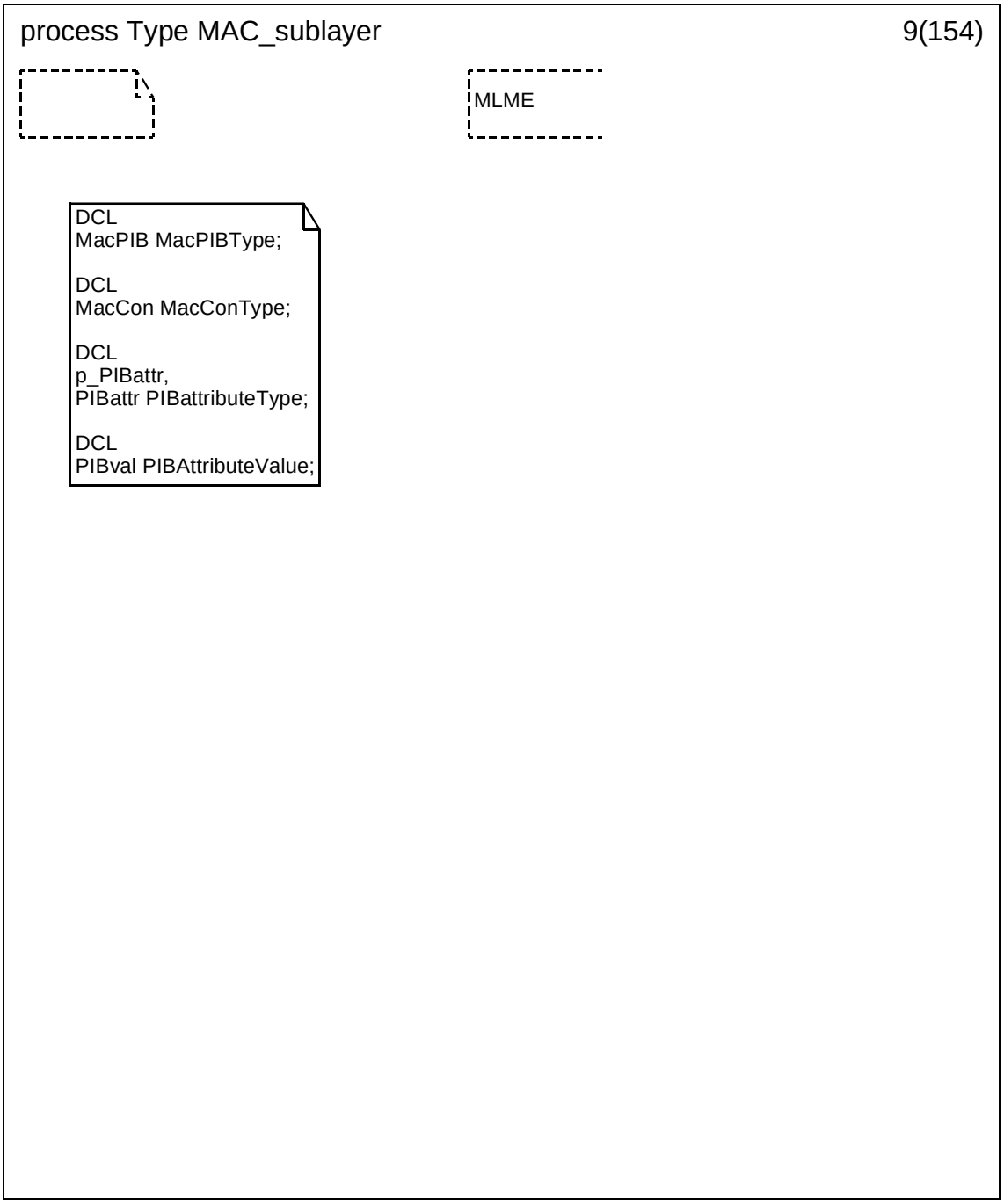


Copyright © 2003 IEEE. All rights reserved.

Authorized licensed use limited to: IEEE - Staff. Downloaded on October 28,2024 at 20:20:02 UTC from IEEE Xplore. Restrictions apply.

INTEL-1011
U.S. Patent 8,219,129

### D.3.1.10 Process type MAC_sublayer (10)

.

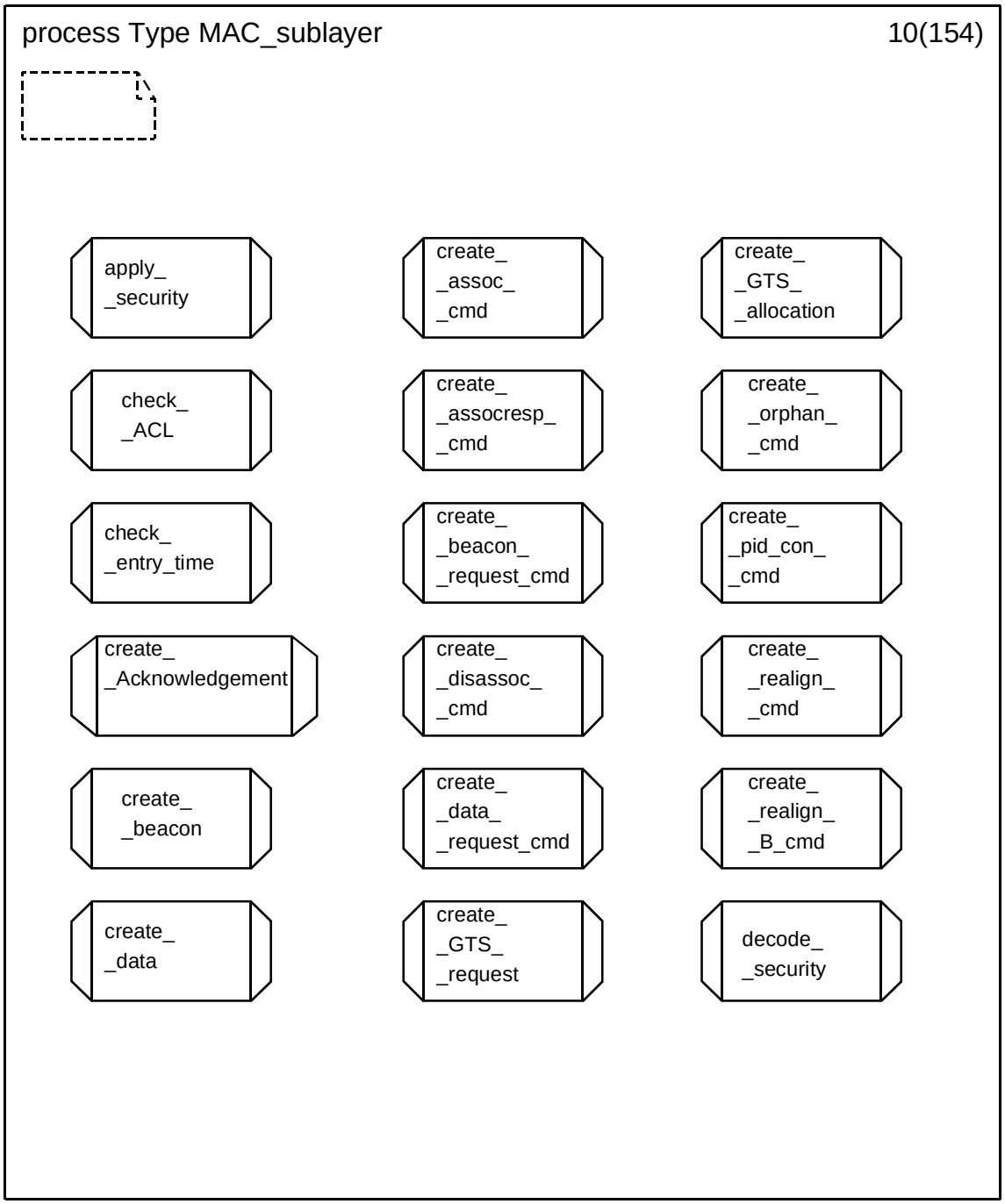



Copyright © 2003 IEEE. All rights reserved.
Authorized licensed use limited to: IEEE - Staff. Downloaded on October 28,2024 at 20:20:02 UTC from IEEE Xplore. Restrictions apply.

INTEL-1011
U.S. Patent 8,219,129

### D.3.1.11 Process type MAC_sublayer (11)

.

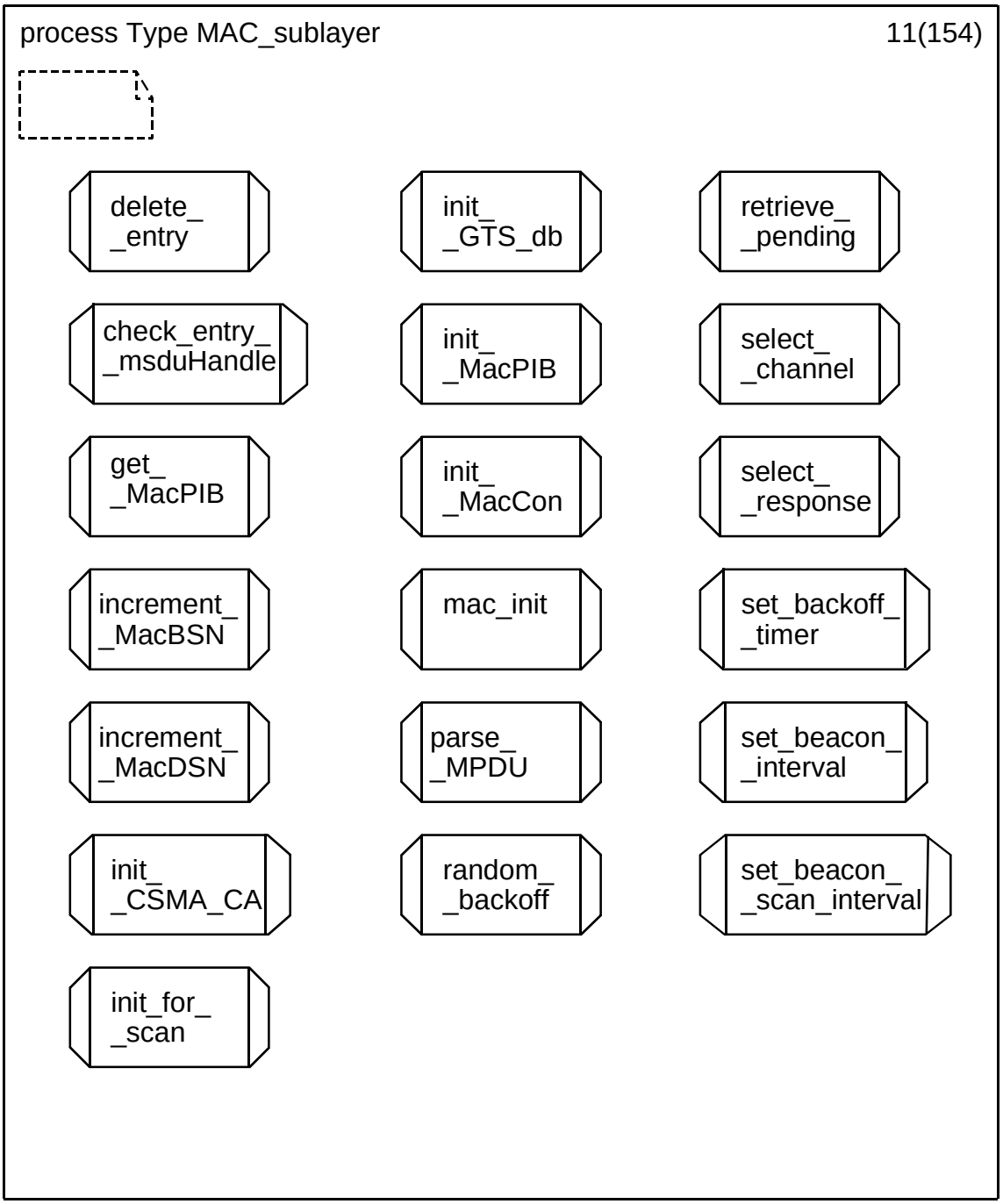


Copyright © 2003 IEEE. All rights reserved.

Authorized licensed use limited to: IEEE - Staff. Downloaded on October 28,2024 at 20:20:02 UTC from IEEE Xplore. Restrictions apply.

INTEL-1011
U.S. Patent 8,219,129

**D.3.1.12 Process type MAC_sublayer (12)**

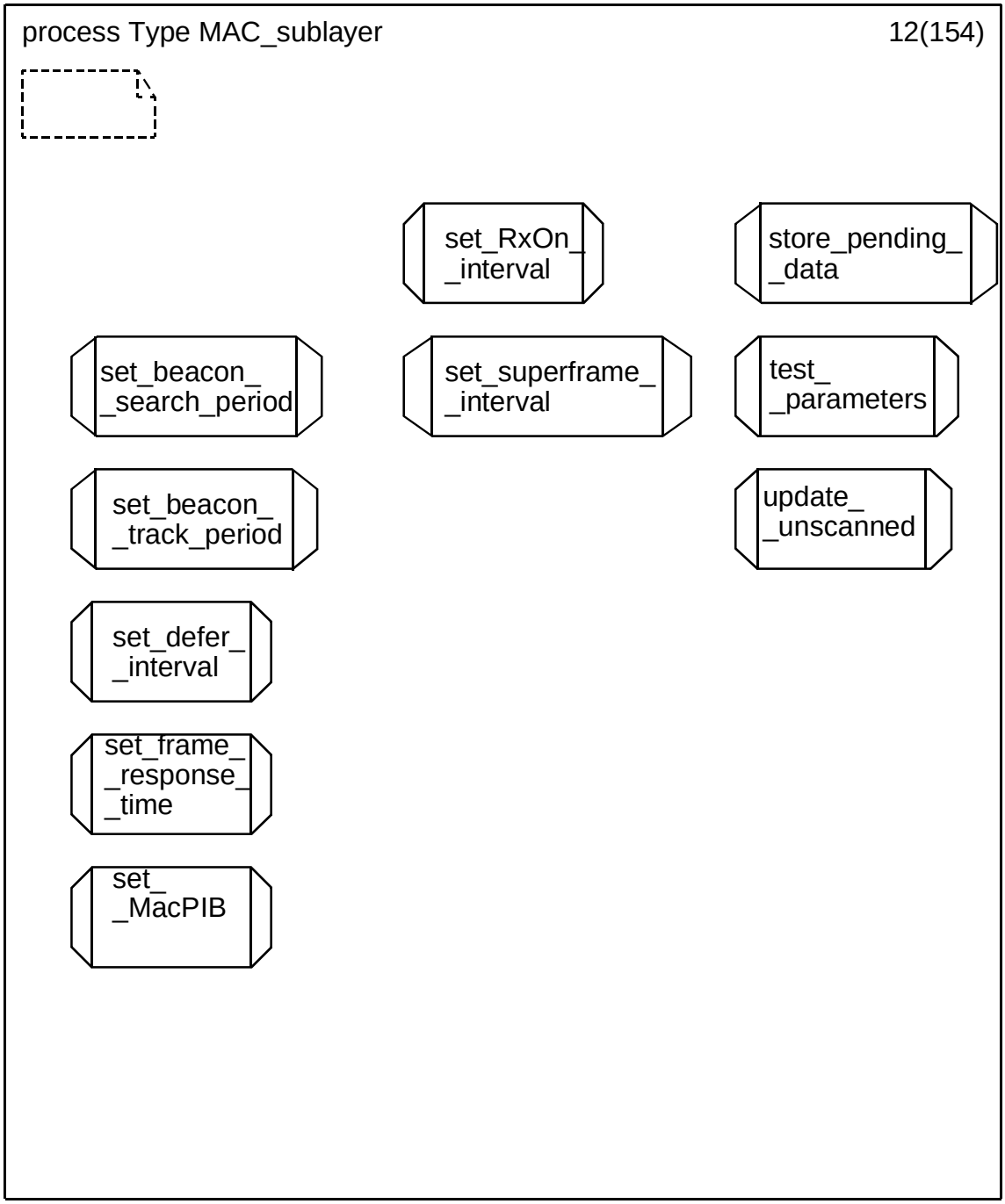



Copyright © 2003 IEEE. All rights reserved.
Authorized licensed use limited to: IEEE - Staff. Downloaded on October 28,2024 at 20:20:02 UTC from IEEE Xplore. Restrictions apply.

INTEL-1011
U.S. Patent 8,219,129

### D.3.1.13 Process type MAC_sublayer (13)

.

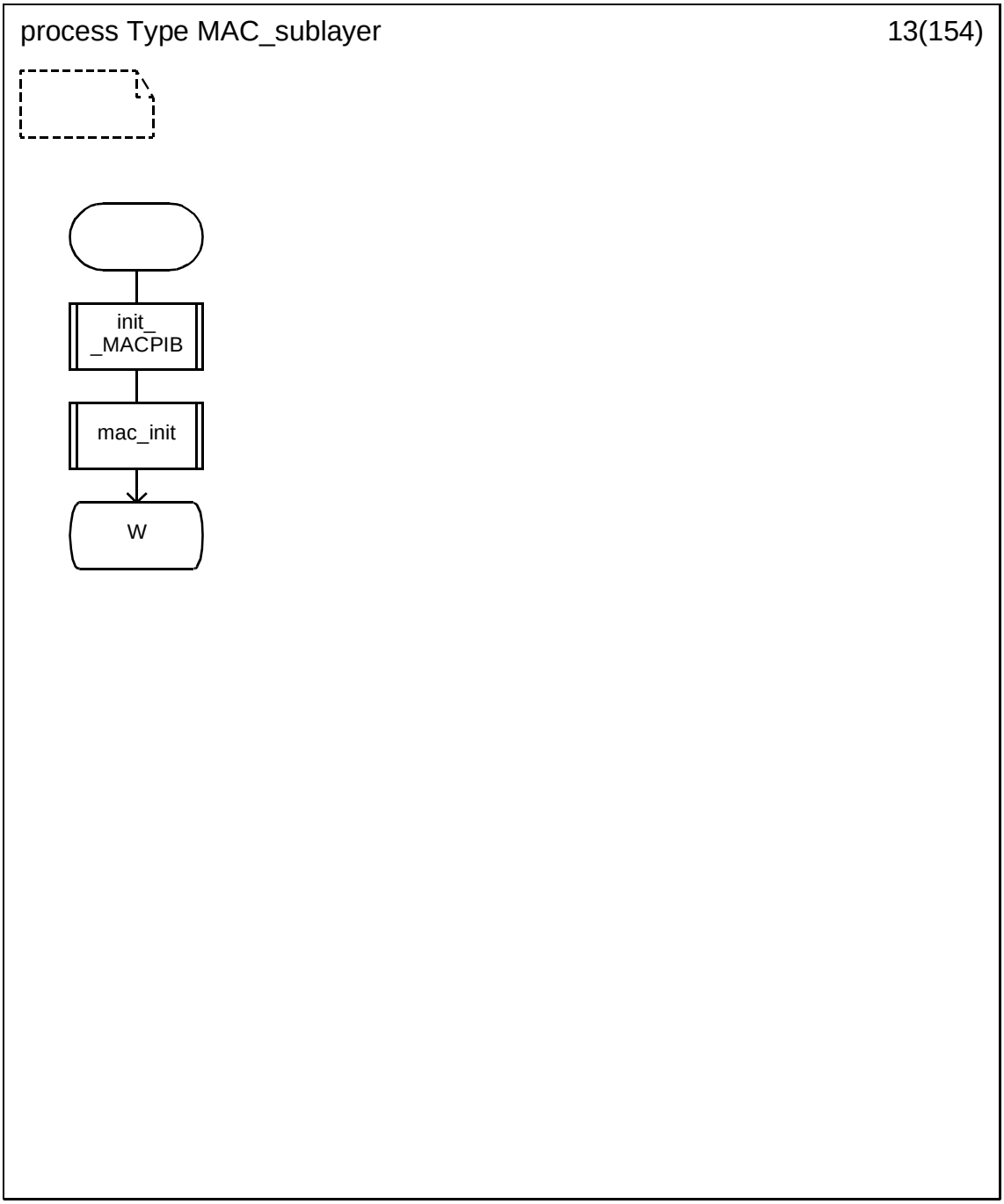


Copyright © 2003 IEEE. All rights reserved.

Authorized licensed use limited to: IEEE - Staff. Downloaded on October 28,2024 at 20:20:02 UTC from IEEE Xplore. Restrictions apply.

INTEL-1011
U.S. Patent 8,219,129

### D.3.1.14 Process type MAC_sublayer (14)

.

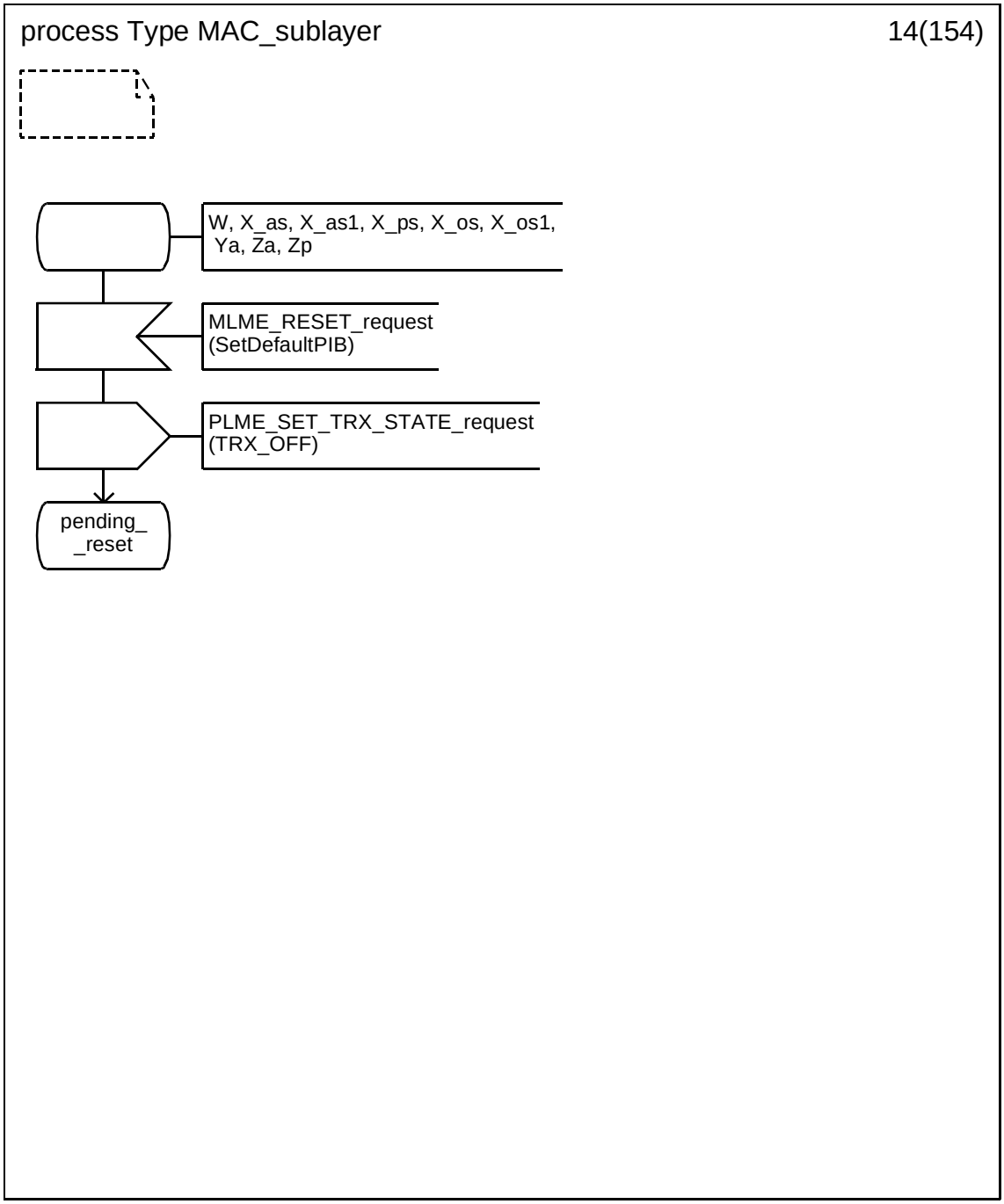



Copyright © 2003 IEEE. All rights reserved.
Authorized licensed use limited to: IEEE - Staff. Downloaded on October 28,2024 at 20:20:02 UTC from IEEE Xplore. Restrictions apply.

INTEL-1011
U.S. Patent 8,219,129

### D.3.1.15 Process type MAC_sublayer (15)

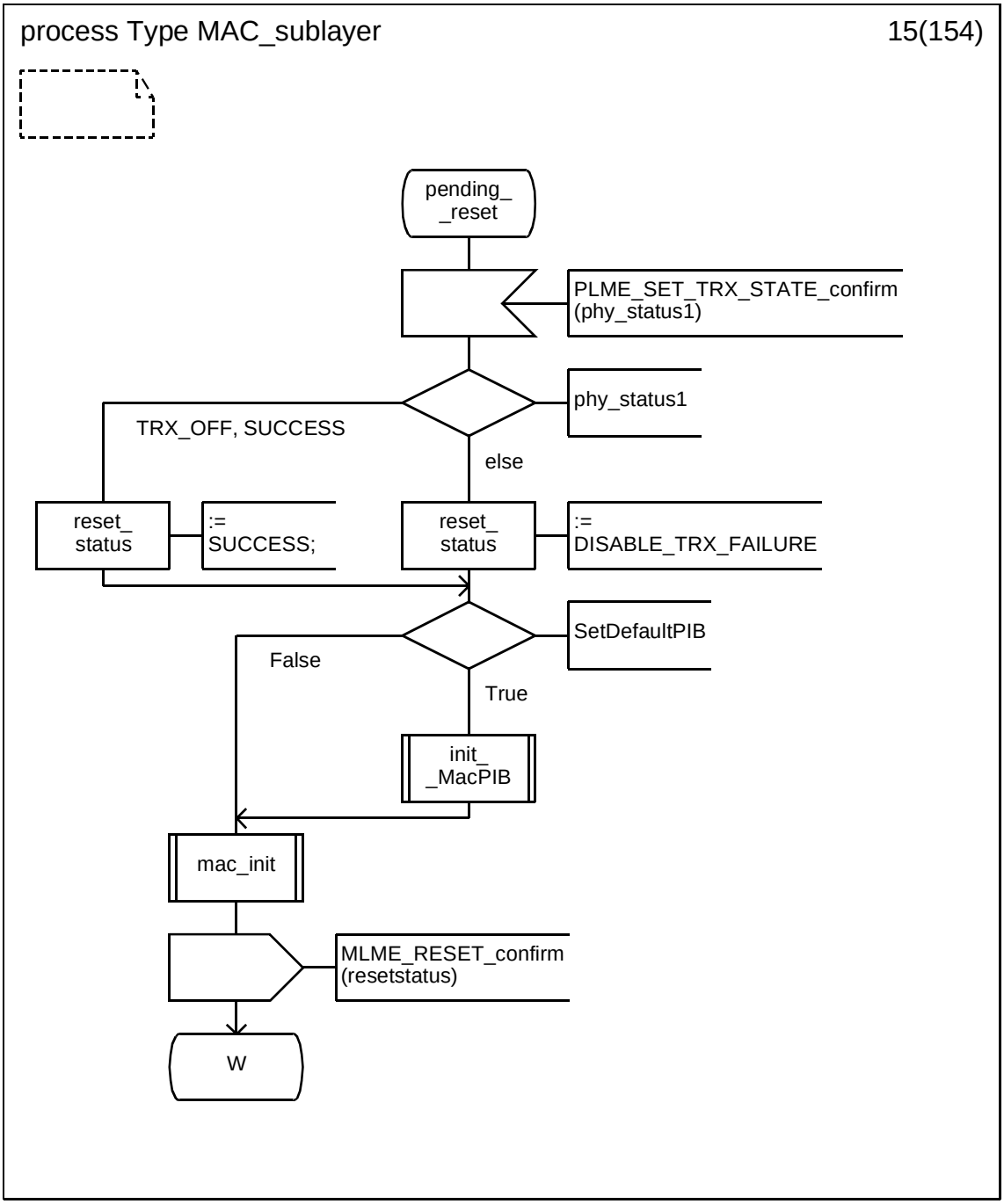


Copyright © 2003 IEEE. All rights reserved.

Authorized licensed use limited to: IEEE - Staff. Downloaded on October 28,2024 at 20:20:02 UTC from IEEE Xplore. Restrictions apply.

INTEL-1011
U.S. Patent 8,219,129

### D.3.1.16 Process type MAC_sublayer (16)

.

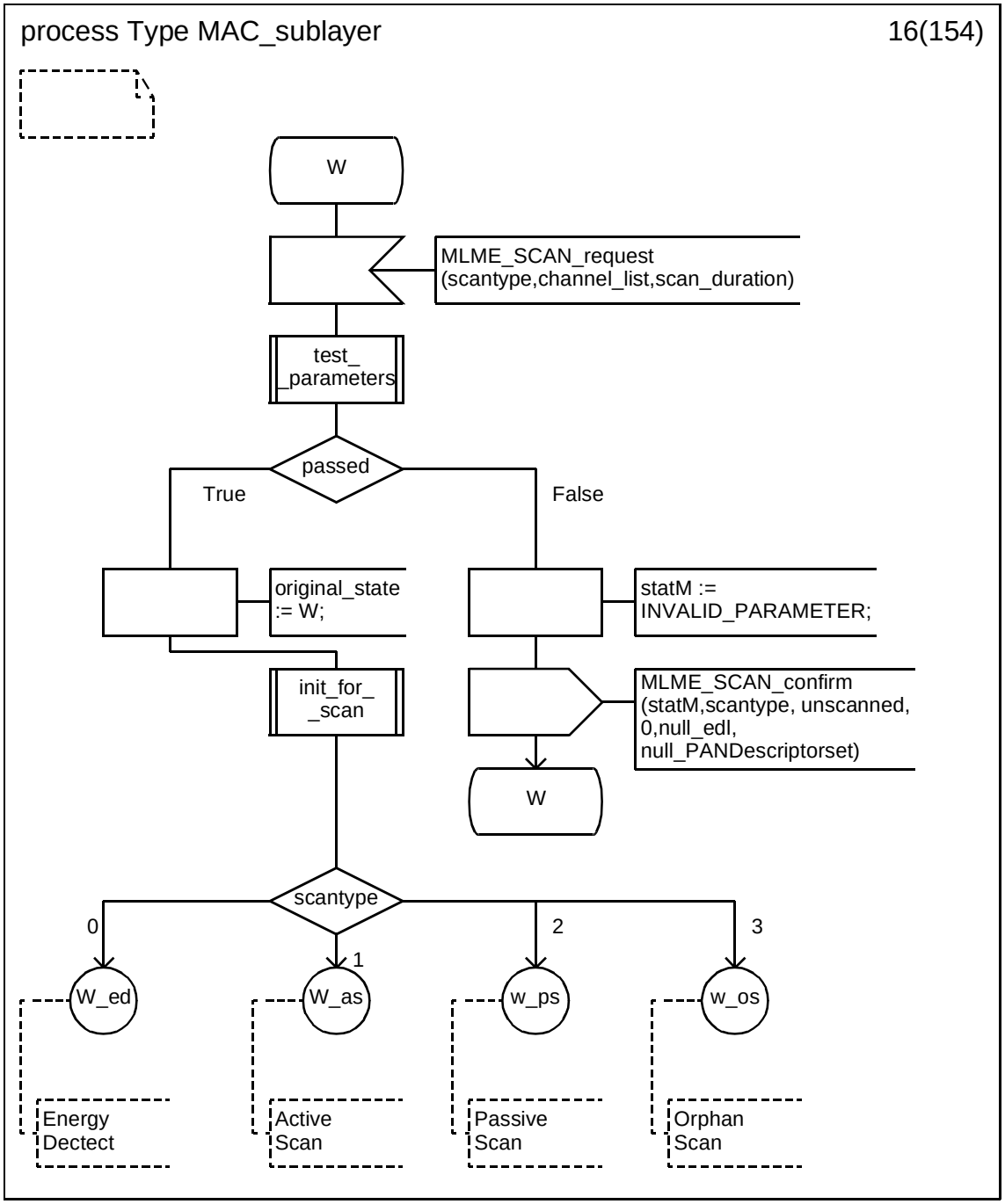



Copyright © 2003 IEEE. All rights reserved.
Authorized licensed use limited to: IEEE - Staff. Downloaded on October 28,2024 at 20:20:02 UTC from IEEE Xplore. Restrictions apply.

INTEL-1011
U.S. Patent 8,219,129

### D.3.1.17 Process type MAC_sublayer (17)

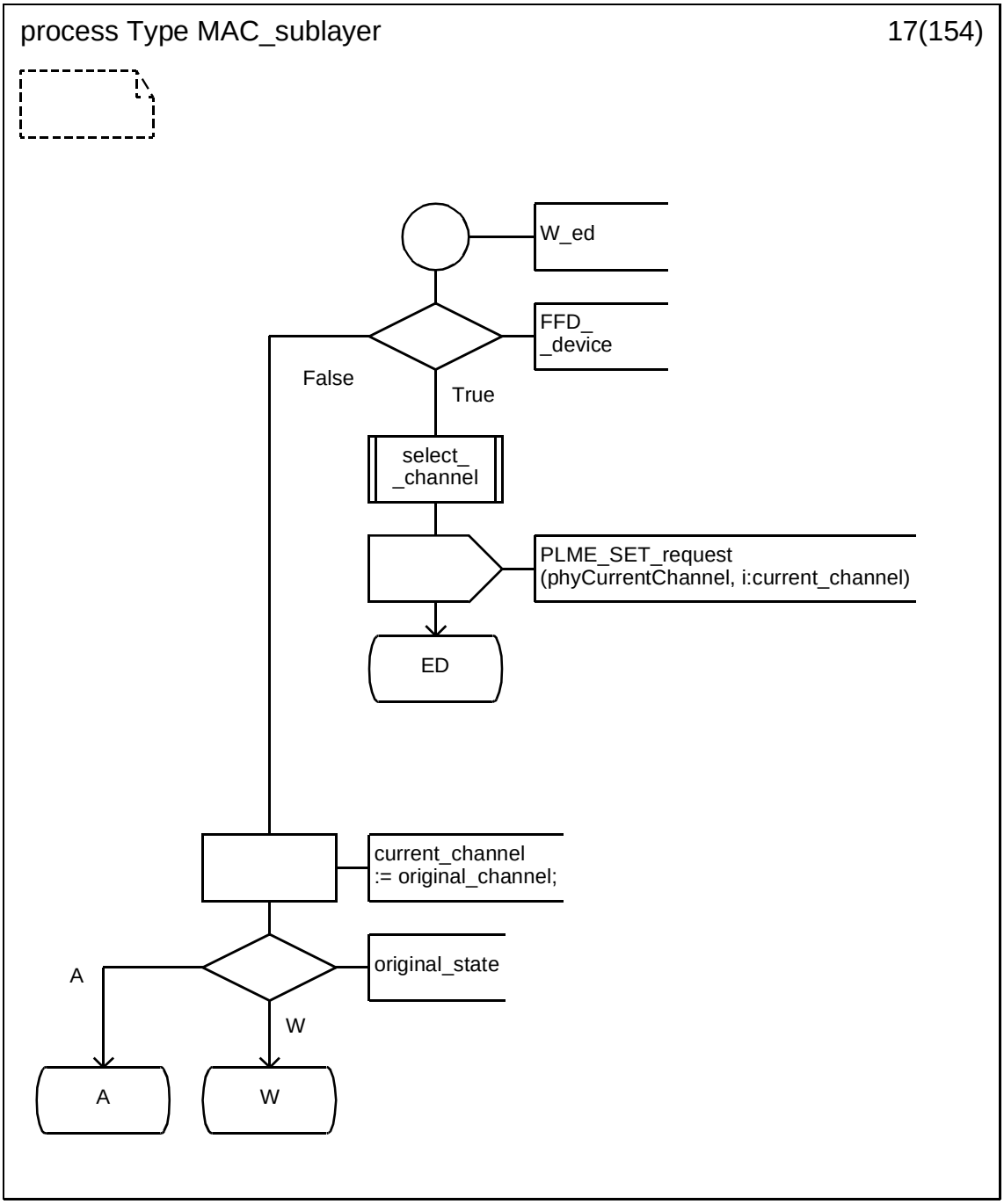


Copyright © 2003 IEEE. All rights reserved.

Authorized licensed use limited to: IEEE - Staff. Downloaded on October 28,2024 at 20:20:02 UTC from IEEE Xplore. Restrictions apply.

INTEL-1011
U.S. Patent 8,219,129

### D.3.1.18 Process type MAC_sublayer (18)

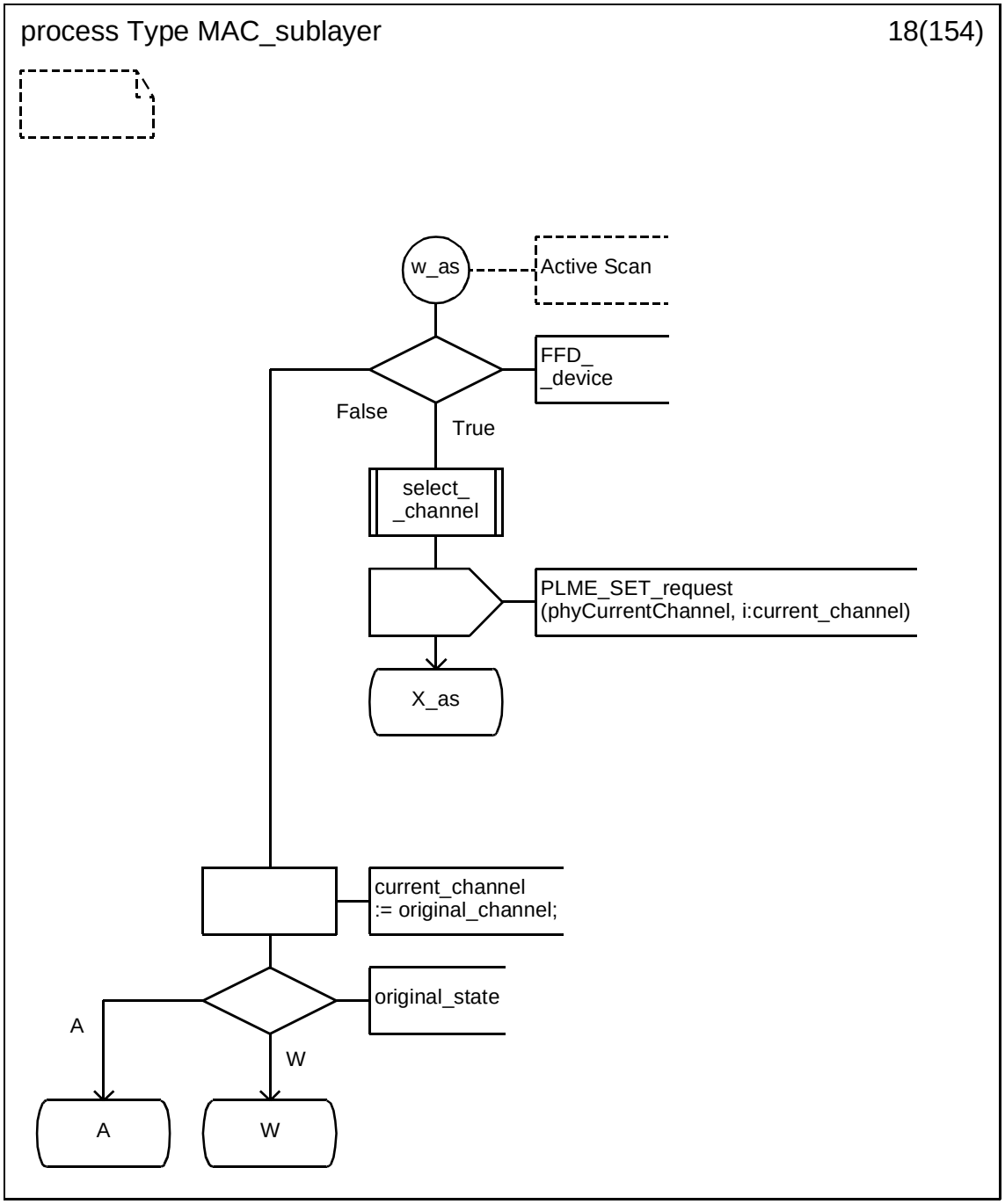



Copyright © 2003 IEEE. All rights reserved.
Authorized licensed use limited to: IEEE - Staff. Downloaded on October 28,2024 at 20:20:02 UTC from IEEE Xplore. Restrictions apply.

INTEL-1011
U.S. Patent 8,219,129

### D.3.1.19 Process type MAC_sublayer (19)

.

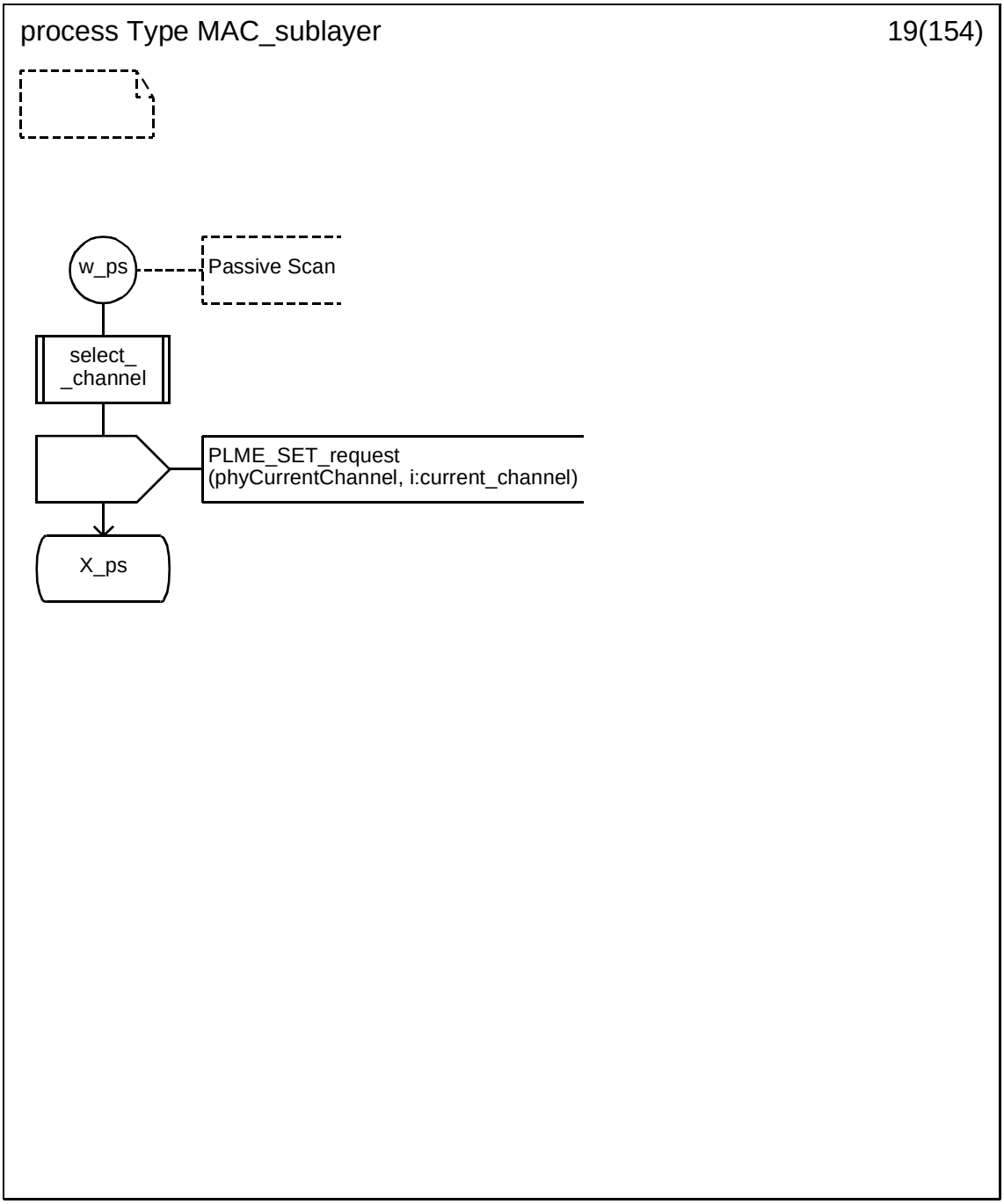


Copyright © 2003 IEEE. All rights reserved.

Authorized licensed use limited to: IEEE - Staff. Downloaded on October 28,2024 at 20:20:02 UTC from IEEE Xplore. Restrictions apply.

INTEL-1011
U.S. Patent 8,219,129

### D.3.1.20 Process type MAC_sublayer (20)

.

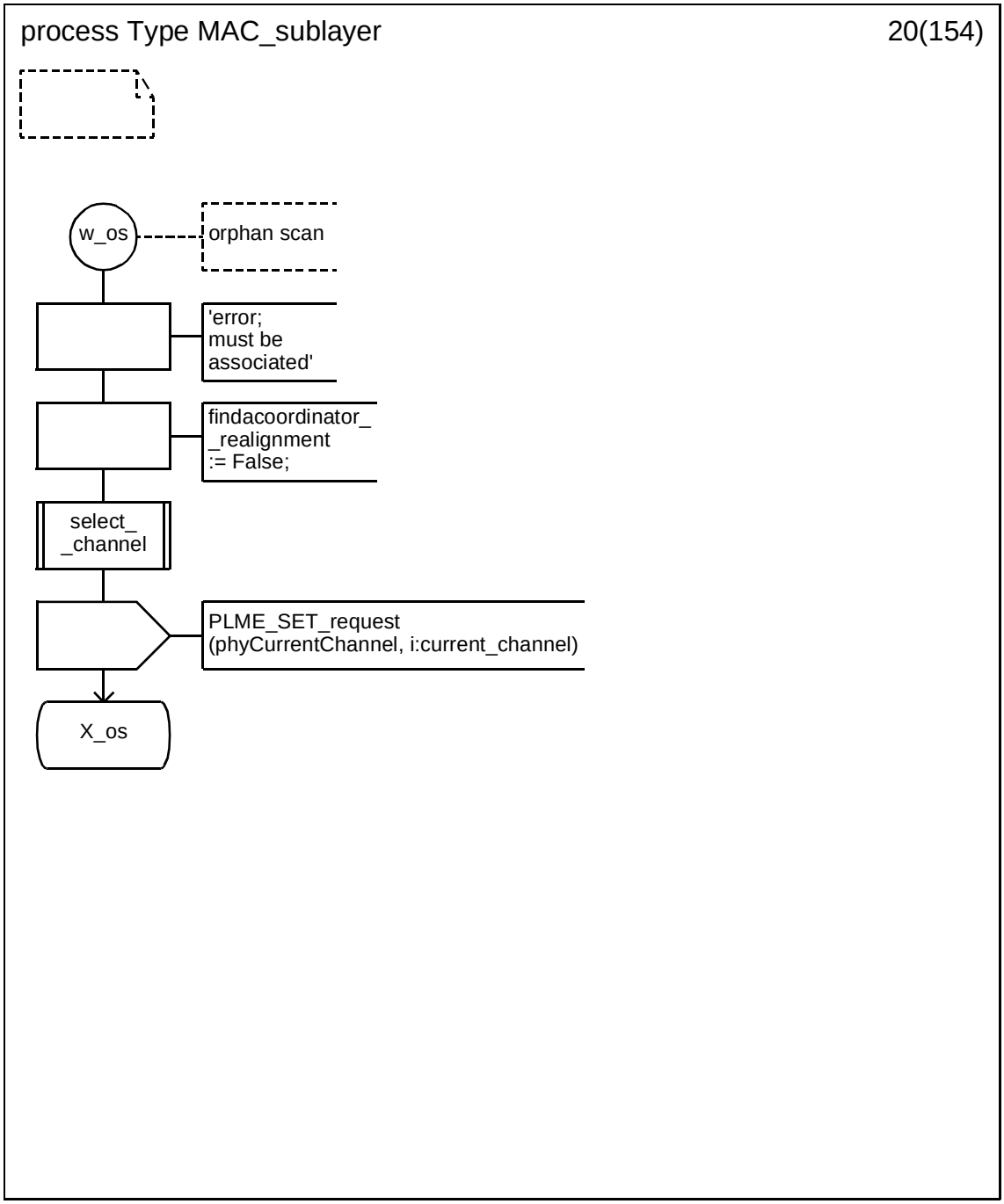



Copyright © 2003 IEEE. All rights reserved.
Authorized licensed use limited to: IEEE - Staff. Downloaded on October 28,2024 at 20:20:02 UTC from IEEE Xplore. Restrictions apply.

INTEL-1011
U.S. Patent 8,219,129

### D.3.1.21 Process type MAC_sublayer (21)

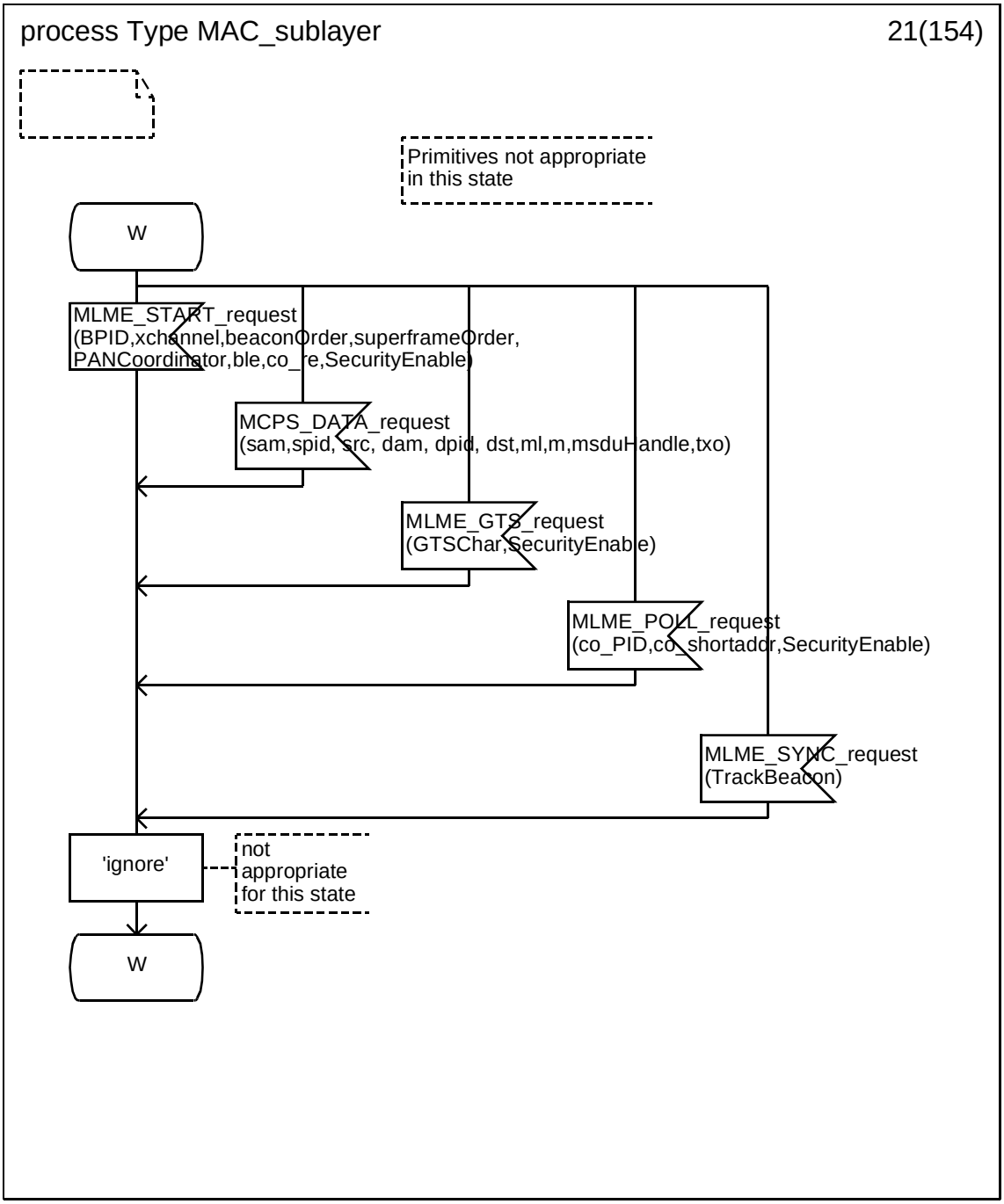


Copyright © 2003 IEEE. All rights reserved.

Authorized licensed use limited to: IEEE - Staff. Downloaded on October 28,2024 at 20:20:02 UTC from IEEE Xplore. Restrictions apply.

INTEL-1011
U.S. Patent 8,219,129

### D.3.1.22 Process type MAC_sublayer (22)

.

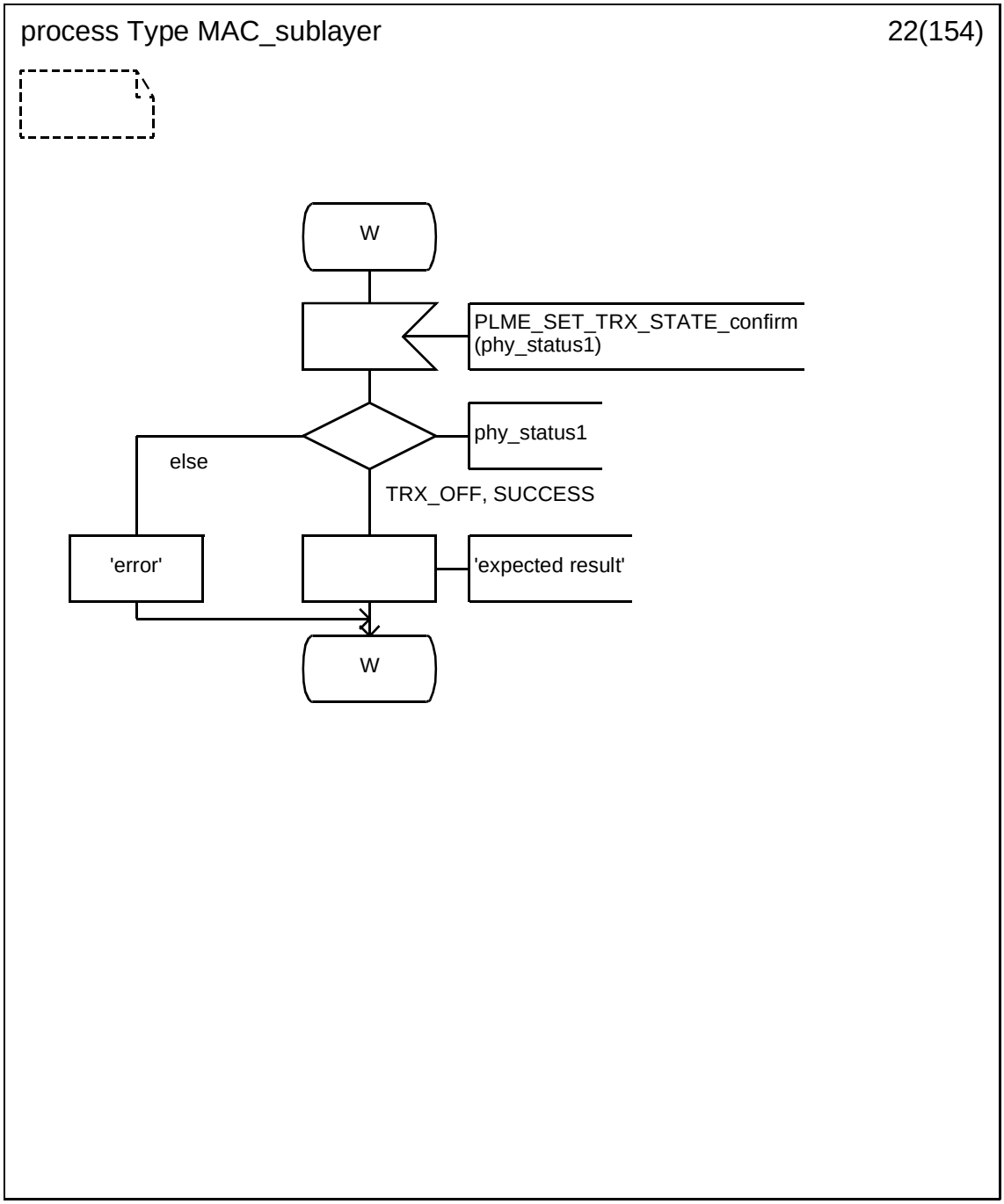



Copyright © 2003 IEEE. All rights reserved.
Authorized licensed use limited to: IEEE - Staff. Downloaded on October 28,2024 at 20:20:02 UTC from IEEE Xplore. Restrictions apply.

INTEL-1011
U.S. Patent 8,219,129

### D.3.1.23 Process type MAC_sublayer (23)

.

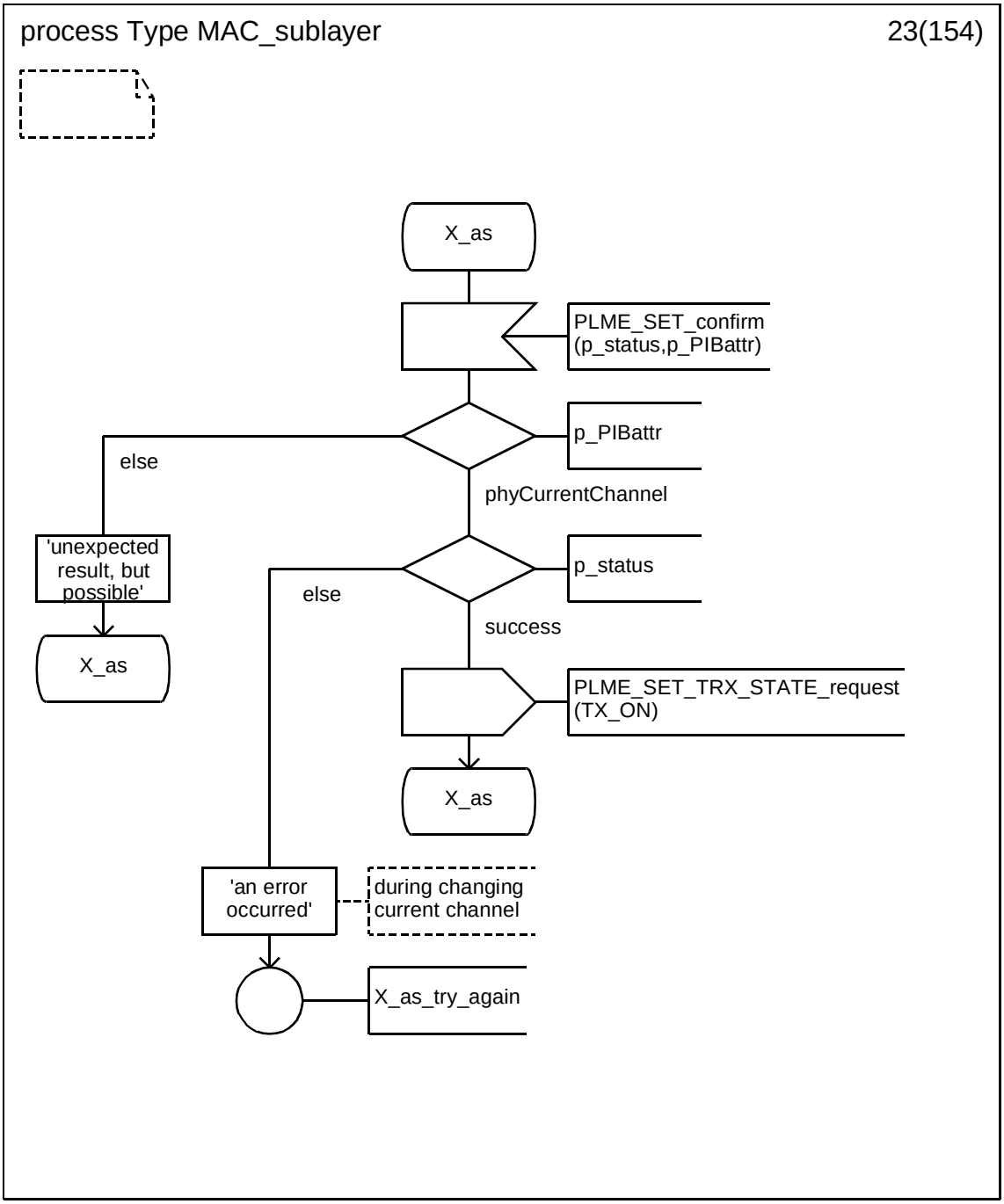


Copyright © 2003 IEEE. All rights reserved.

Authorized licensed use limited to: IEEE - Staff. Downloaded on October 28,2024 at 20:20:02 UTC from IEEE Xplore. Restrictions apply.

INTEL-1011
U.S. Patent 8,219,129

### D.3.1.24 Process type MAC_sublayer (24)

.

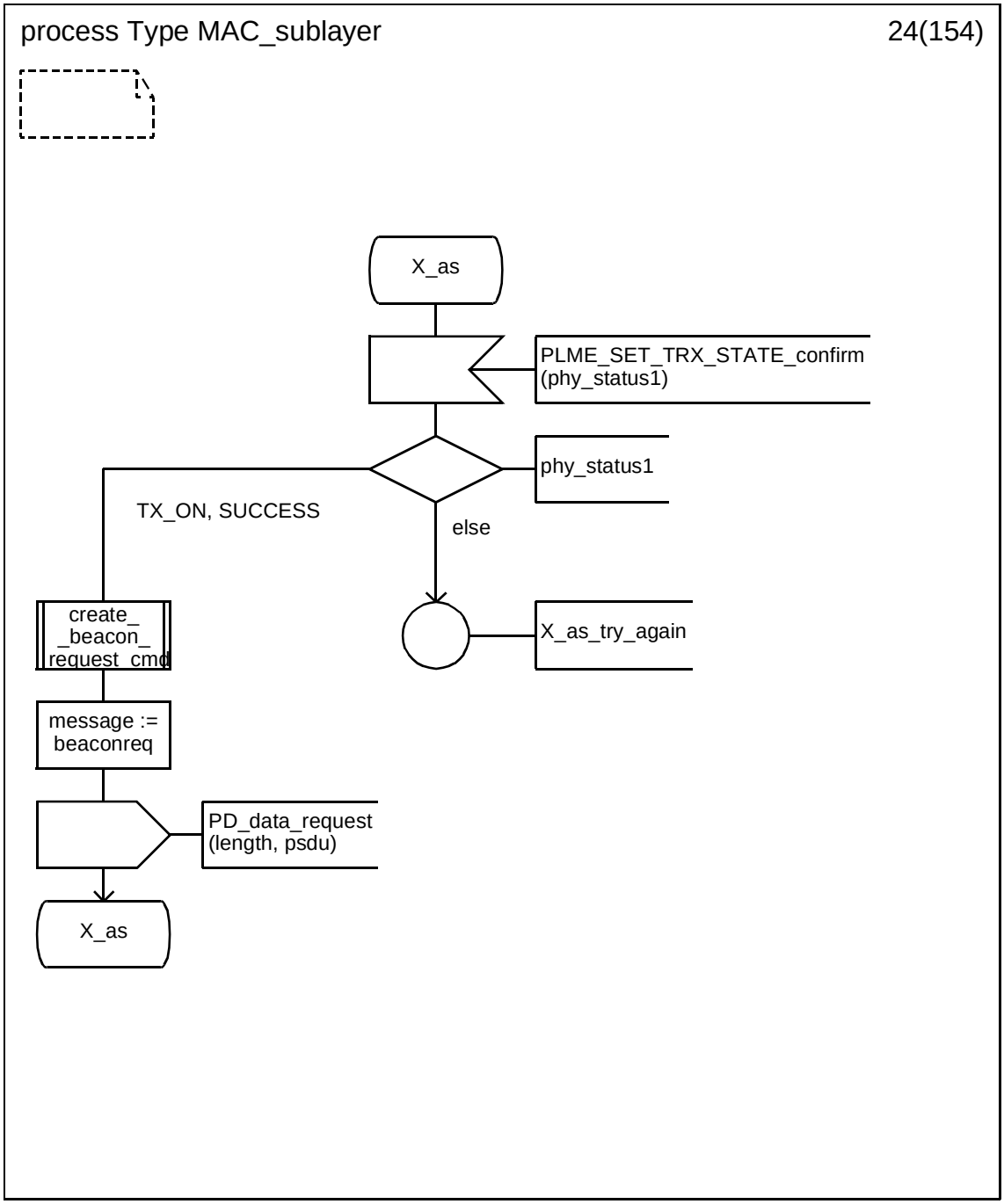



Copyright © 2003 IEEE. All rights reserved.
Authorized licensed use limited to: IEEE - Staff. Downloaded on October 28,2024 at 20:20:02 UTC from IEEE Xplore. Restrictions apply.

INTEL-1011
U.S. Patent 8,219,129

### D.3.1.25 Process type MAC_sublayer (25)

.

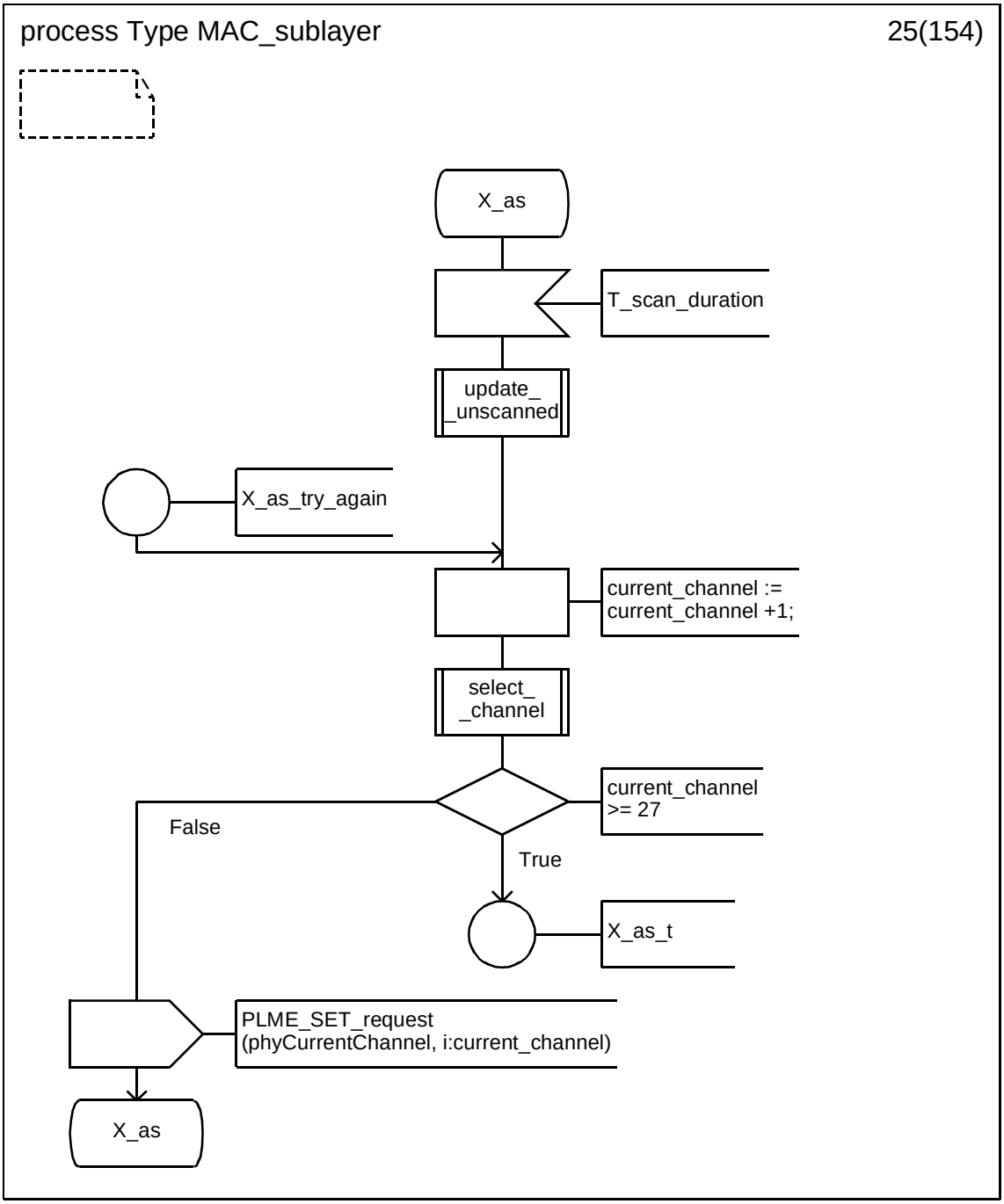


Copyright © 2003 IEEE. All rights reserved.

Authorized licensed use limited to: IEEE - Staff. Downloaded on October 28,2024 at 20:20:02 UTC from IEEE Xplore. Restrictions apply.

INTEL-1011
U.S. Patent 8,219,129

### D.3.1.26 Process type MAC_sublayer (26)

.

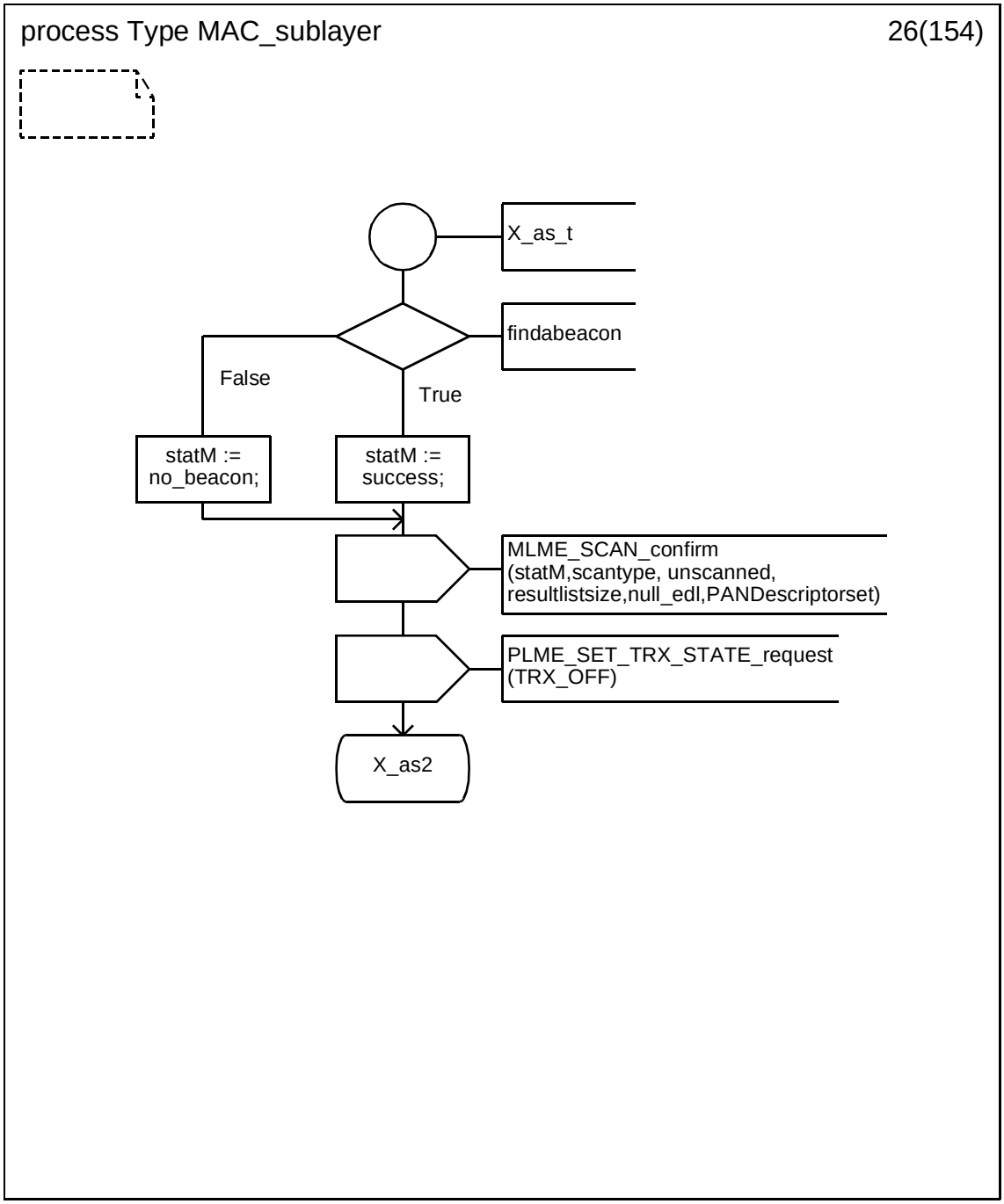



Copyright © 2003 IEEE. All rights reserved.
Authorized licensed use limited to: IEEE - Staff. Downloaded on October 28,2024 at 20:20:02 UTC from IEEE Xplore. Restrictions apply.

INTEL-1011
U.S. Patent 8,219,129

### D.3.1.27 Process type MAC_sublayer (27)

.

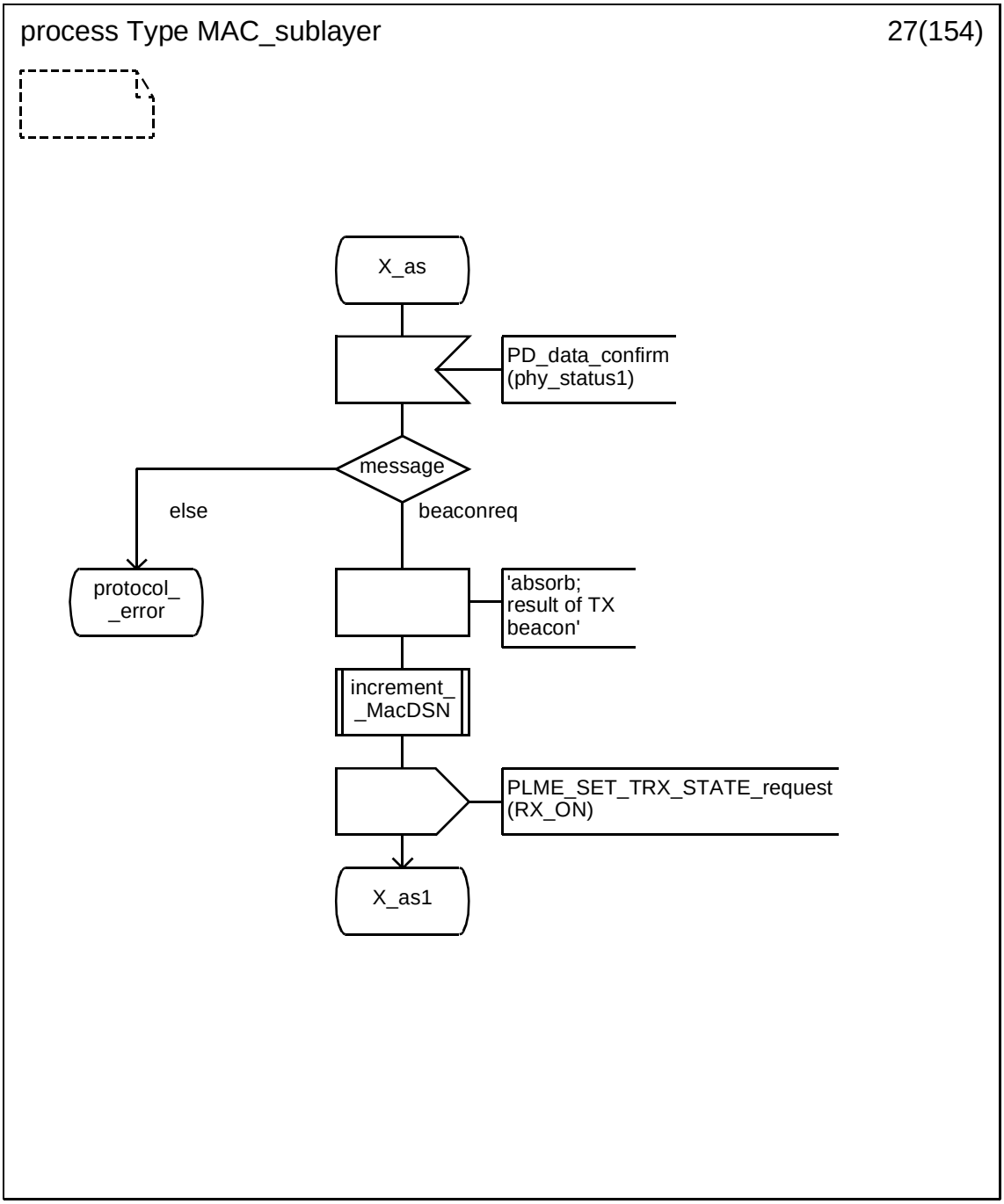


Copyright © 2003 IEEE. All rights reserved.

Authorized licensed use limited to: IEEE - Staff. Downloaded on October 28,2024 at 20:20:02 UTC from IEEE Xplore. Restrictions apply.

INTEL-1011
U.S. Patent 8,219,129

### D.3.1.28 Process type MAC_sublayer (28)

.

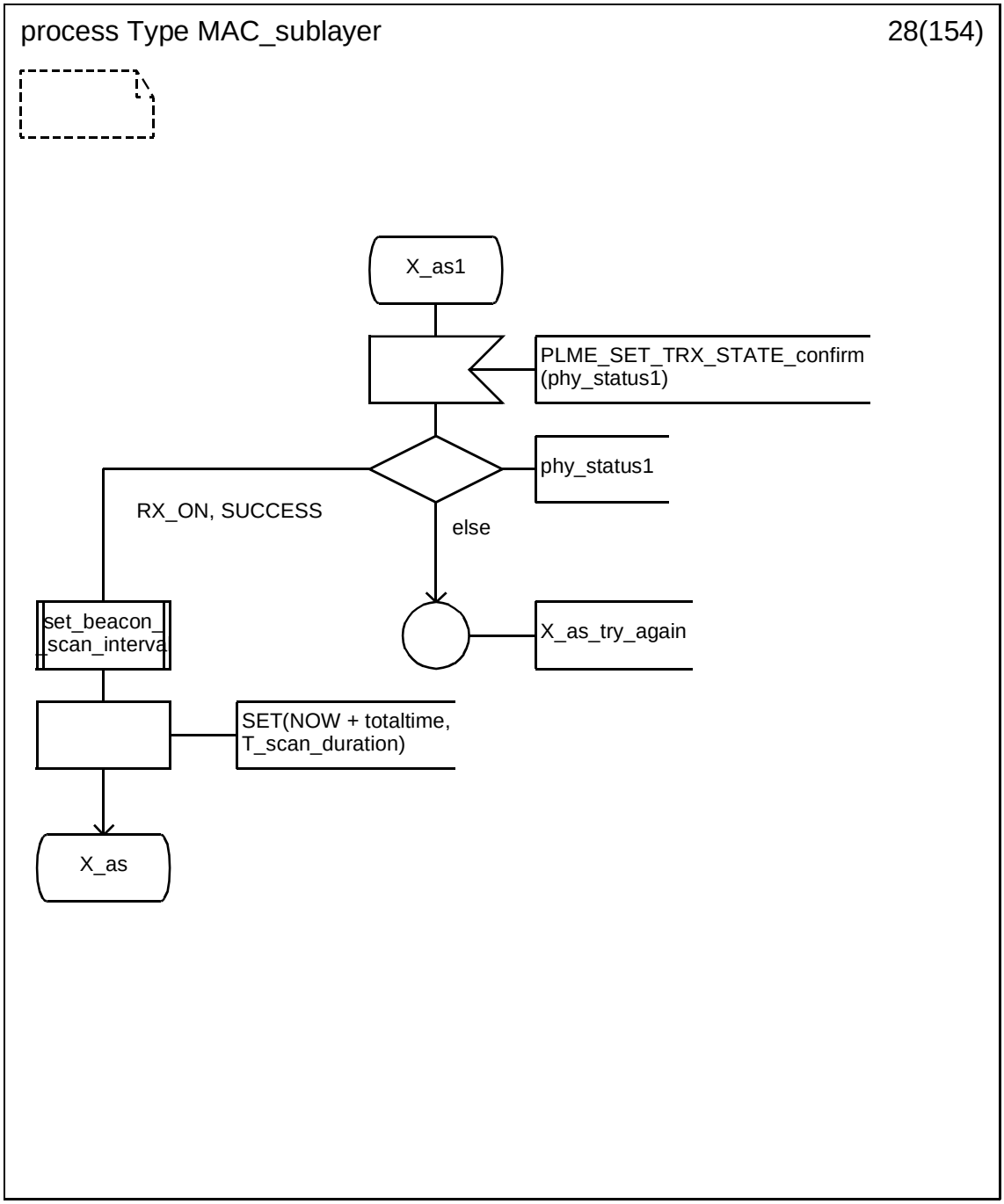



Copyright © 2003 IEEE. All rights reserved.
Authorized licensed use limited to: IEEE - Staff. Downloaded on October 28,2024 at 20:20:02 UTC from IEEE Xplore. Restrictions apply.

INTEL-1011
U.S. Patent 8,219,129

### D.3.1.29 Process type MAC_sublayer (29)

.

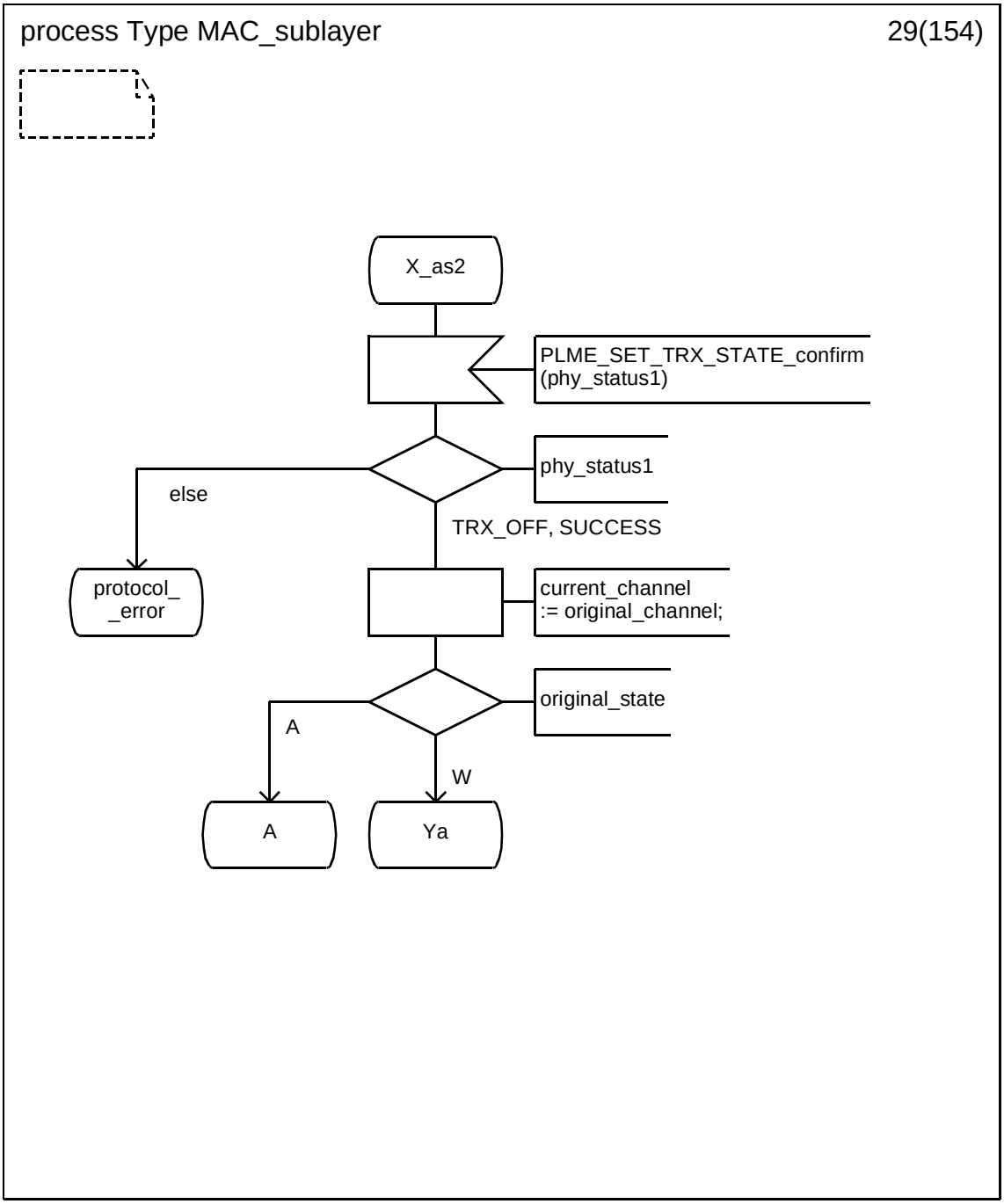


Copyright © 2003 IEEE. All rights reserved.

Authorized licensed use limited to: IEEE - Staff. Downloaded on October 28,2024 at 20:20:02 UTC from IEEE Xplore. Restrictions apply.

INTEL-1011
U.S. Patent 8,219,129

### D.3.1.30 Process type MAC_sublayer (30)

.

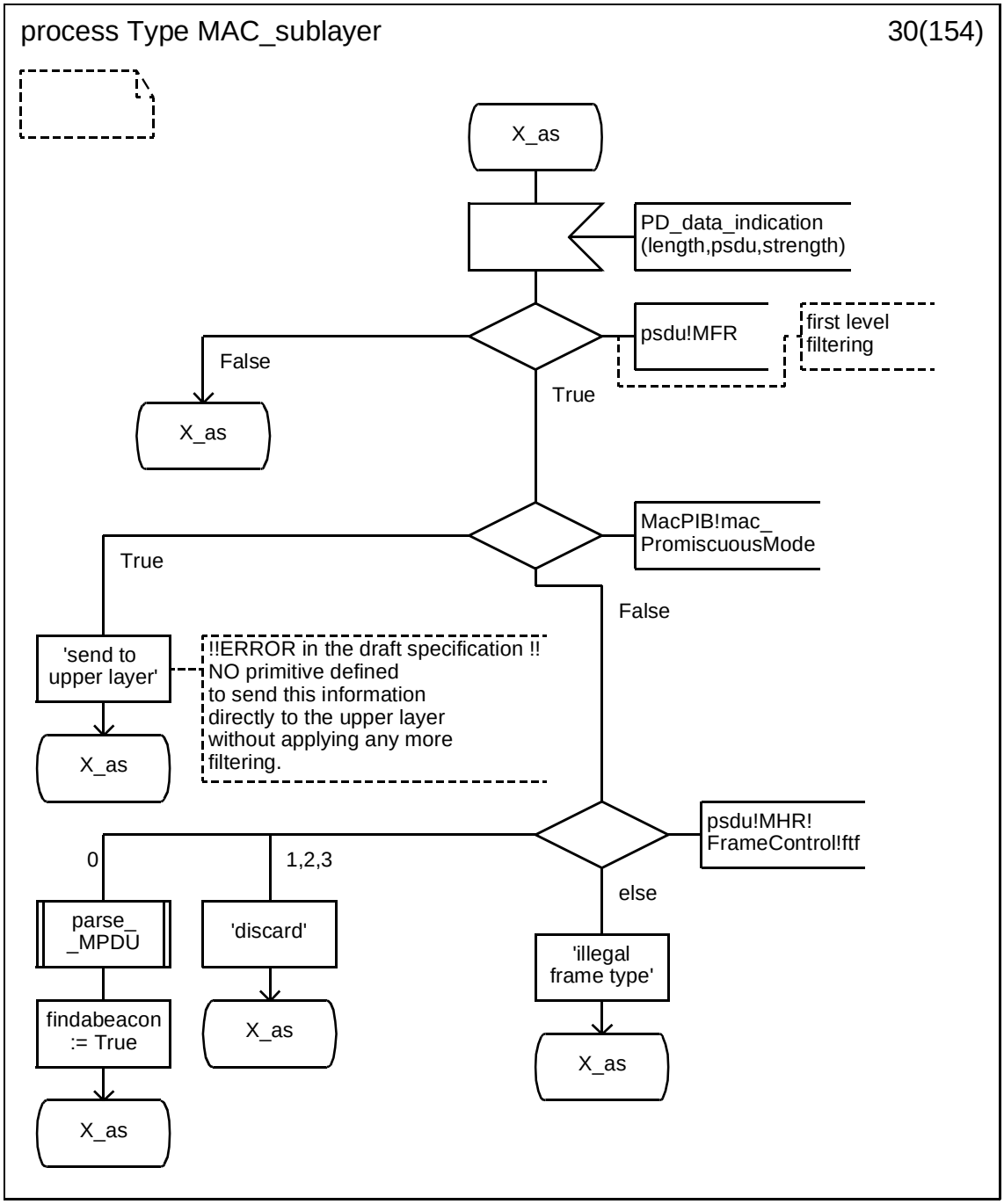



Copyright © 2003 IEEE. All rights reserved.
Authorized licensed use limited to: IEEE - Staff. Downloaded on October 28,2024 at 20:20:02 UTC from IEEE Xplore. Restrictions apply.

INTEL-1011
U.S. Patent 8,219,129

### D.3.1.31 Process type MAC_sublayer (31)

.

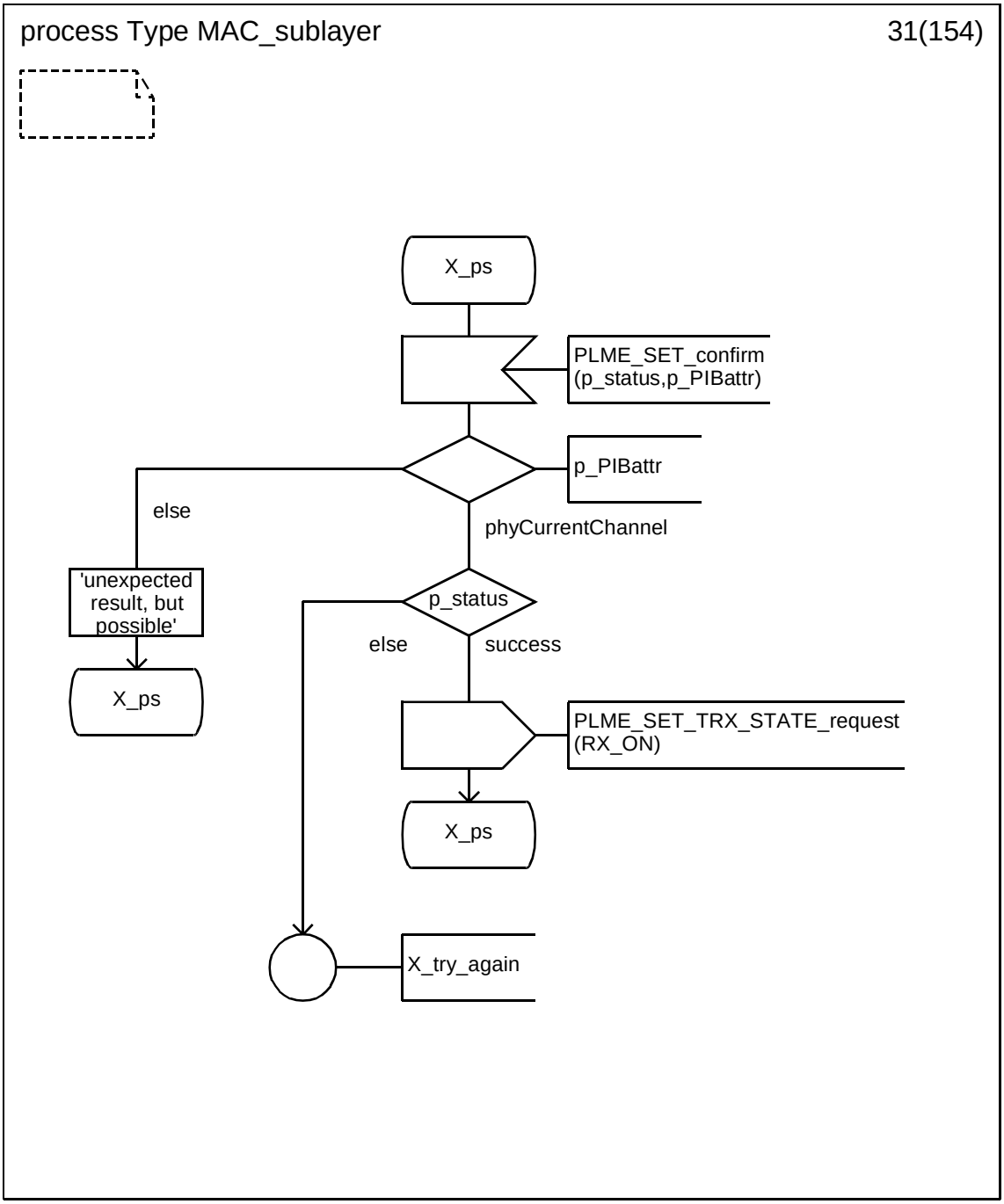


Copyright © 2003 IEEE. All rights reserved.

Authorized licensed use limited to: IEEE - Staff. Downloaded on October 28,2024 at 20:20:02 UTC from IEEE Xplore. Restrictions apply.

INTEL-1011
U.S. Patent 8,219,129

### D.3.1.32 Process type MAC_sublayer (32)

.

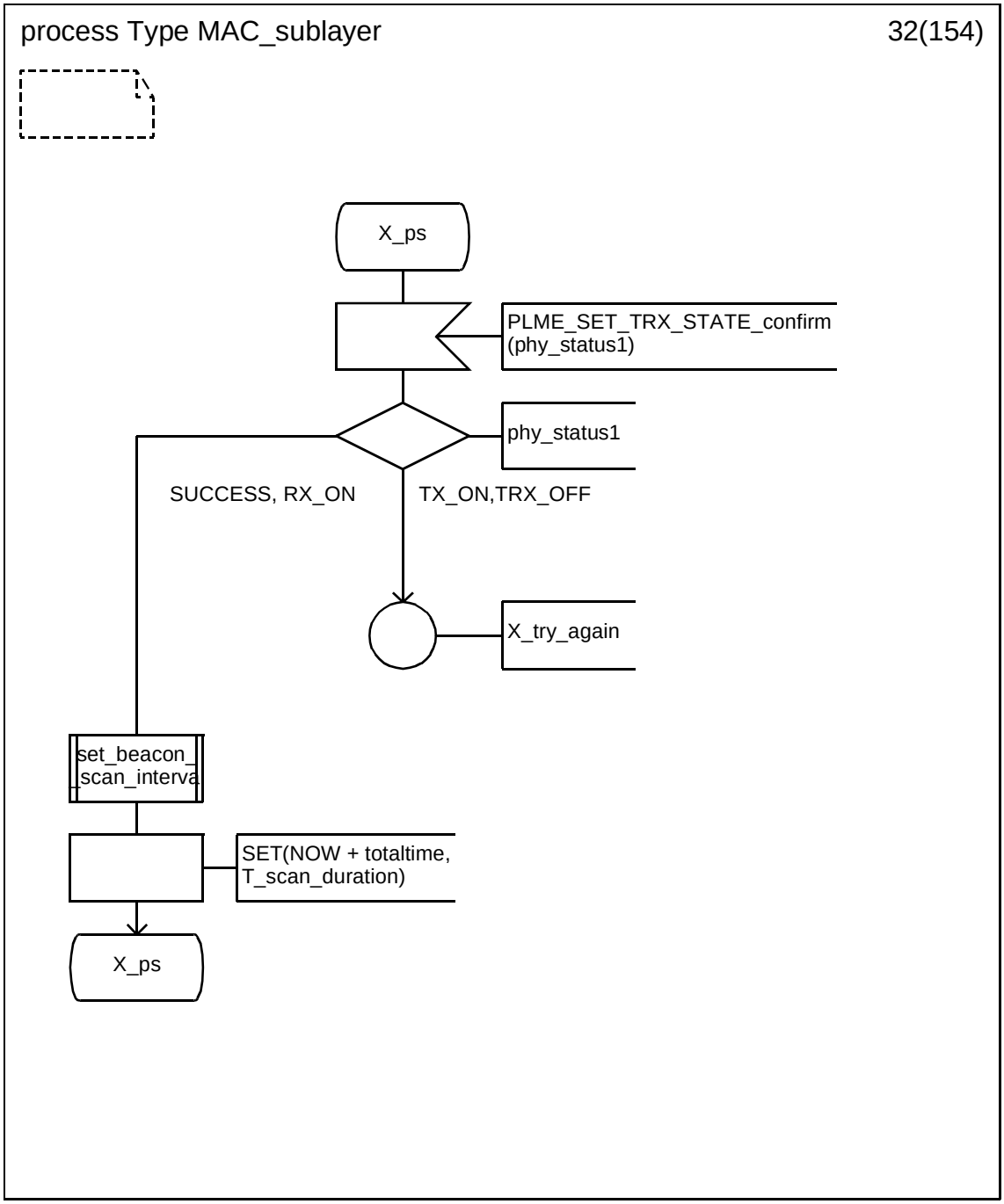



Copyright © 2003 IEEE. All rights reserved.
Authorized licensed use limited to: IEEE - Staff. Downloaded on October 28,2024 at 20:20:02 UTC from IEEE Xplore. Restrictions apply.

INTEL-1011
U.S. Patent 8,219,129

### D.3.1.33 Process type MAC_sublayer (33)

.

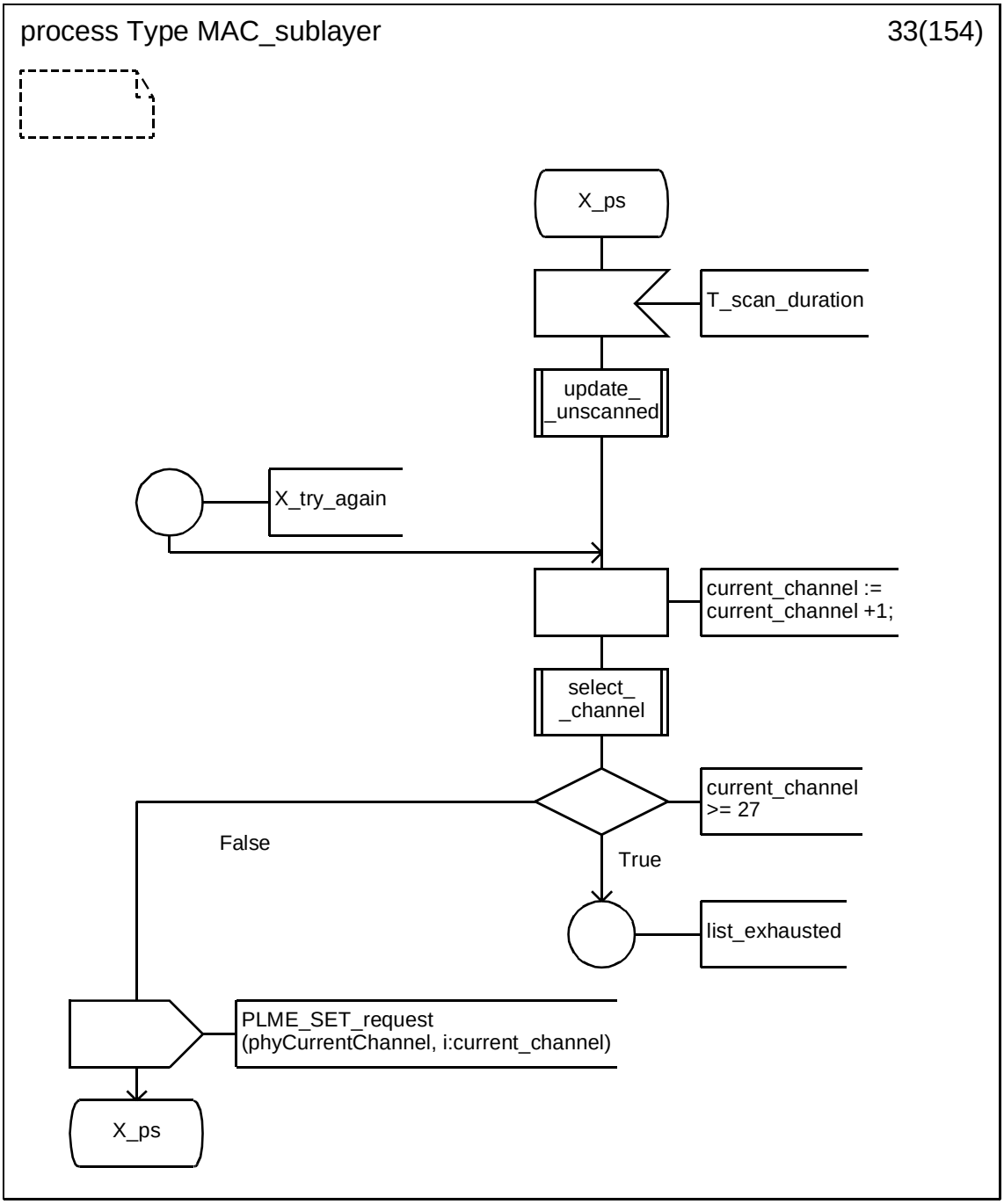


Copyright © 2003 IEEE. All rights reserved.

Authorized licensed use limited to: IEEE - Staff. Downloaded on October 28,2024 at 20:20:02 UTC from IEEE Xplore. Restrictions apply.

INTEL-1011
U.S. Patent 8,219,129

### D.3.1.34 Process type MAC_sublayer (34)

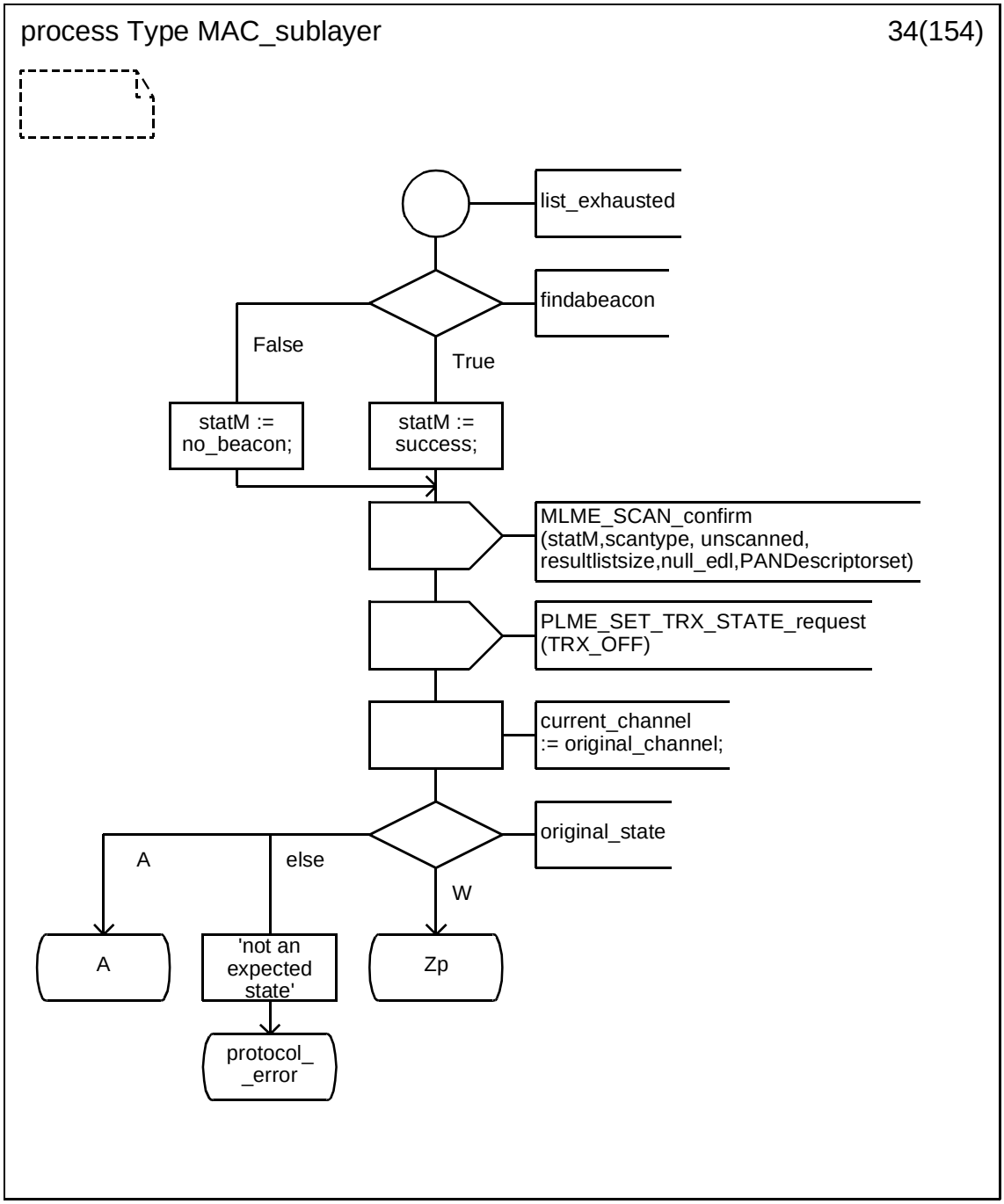



Copyright © 2003 IEEE. All rights reserved.
Authorized licensed use limited to: IEEE - Staff. Downloaded on October 28,2024 at 20:20:02 UTC from IEEE Xplore. Restrictions apply.

INTEL-1011
U.S. Patent 8,219,129

### D.3.1.35 Process type MAC_sublayer (35)

.

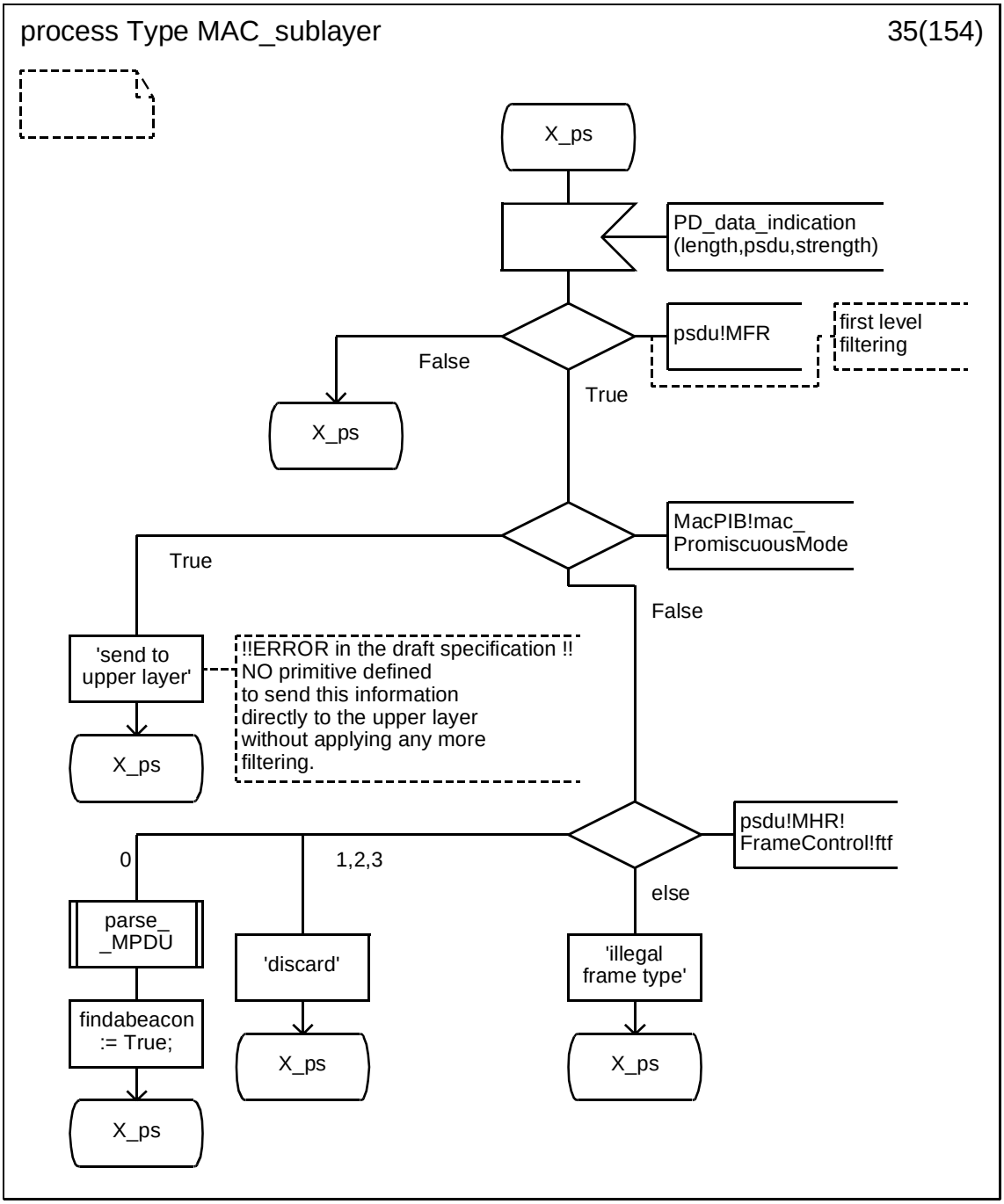


Copyright © 2003 IEEE. All rights reserved.

Authorized licensed use limited to: IEEE - Staff. Downloaded on October 28,2024 at 20:20:02 UTC from IEEE Xplore. Restrictions apply.

INTEL-1011
U.S. Patent 8,219,129

### D.3.1.36 Process type MAC_sublayer (36)

.

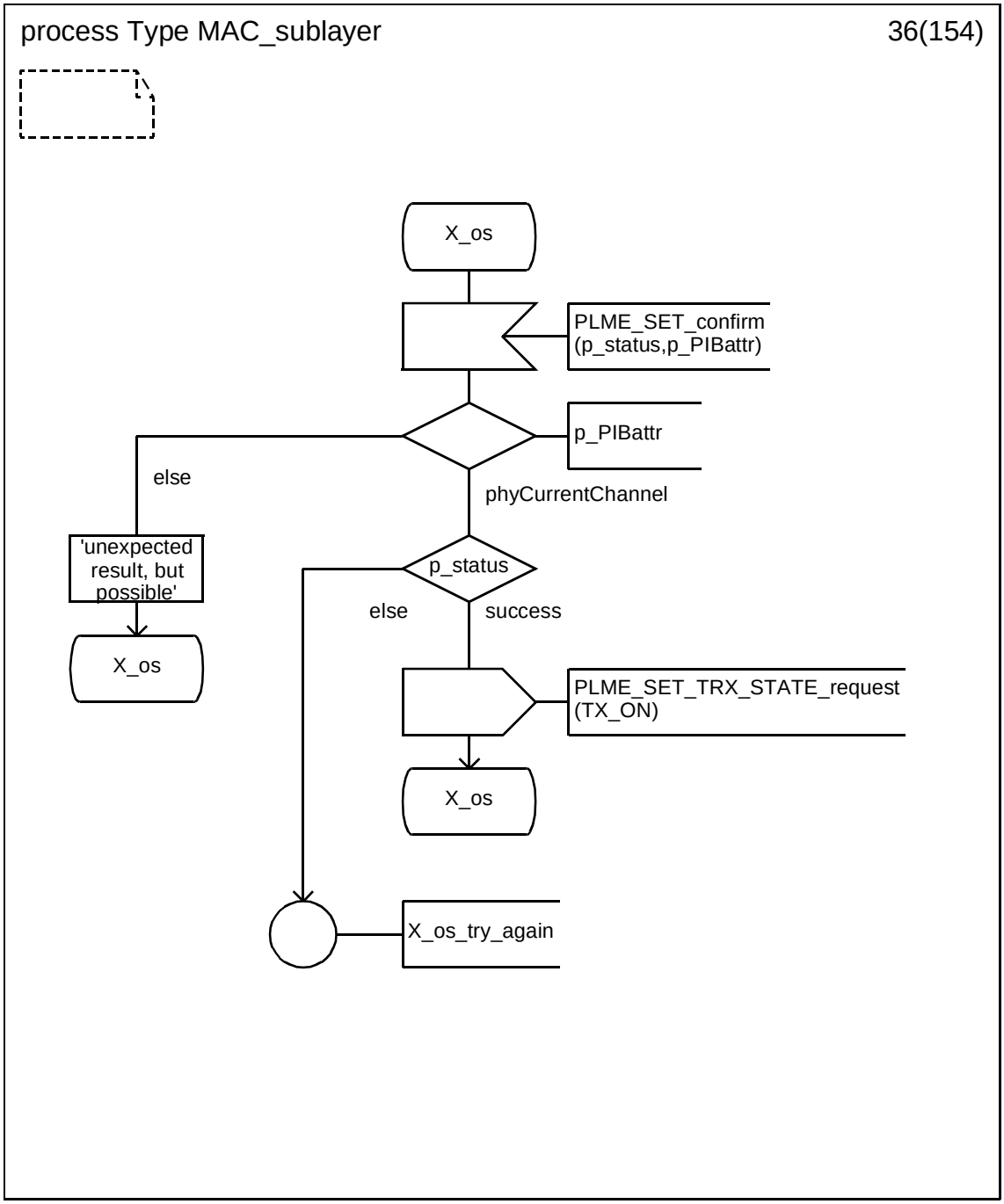



Copyright © 2003 IEEE. All rights reserved.
Authorized licensed use limited to: IEEE - Staff. Downloaded on October 28,2024 at 20:20:02 UTC from IEEE Xplore. Restrictions apply.

INTEL-1011
U.S. Patent 8,219,129

### D.3.1.37 Process type MAC_sublayer (37)

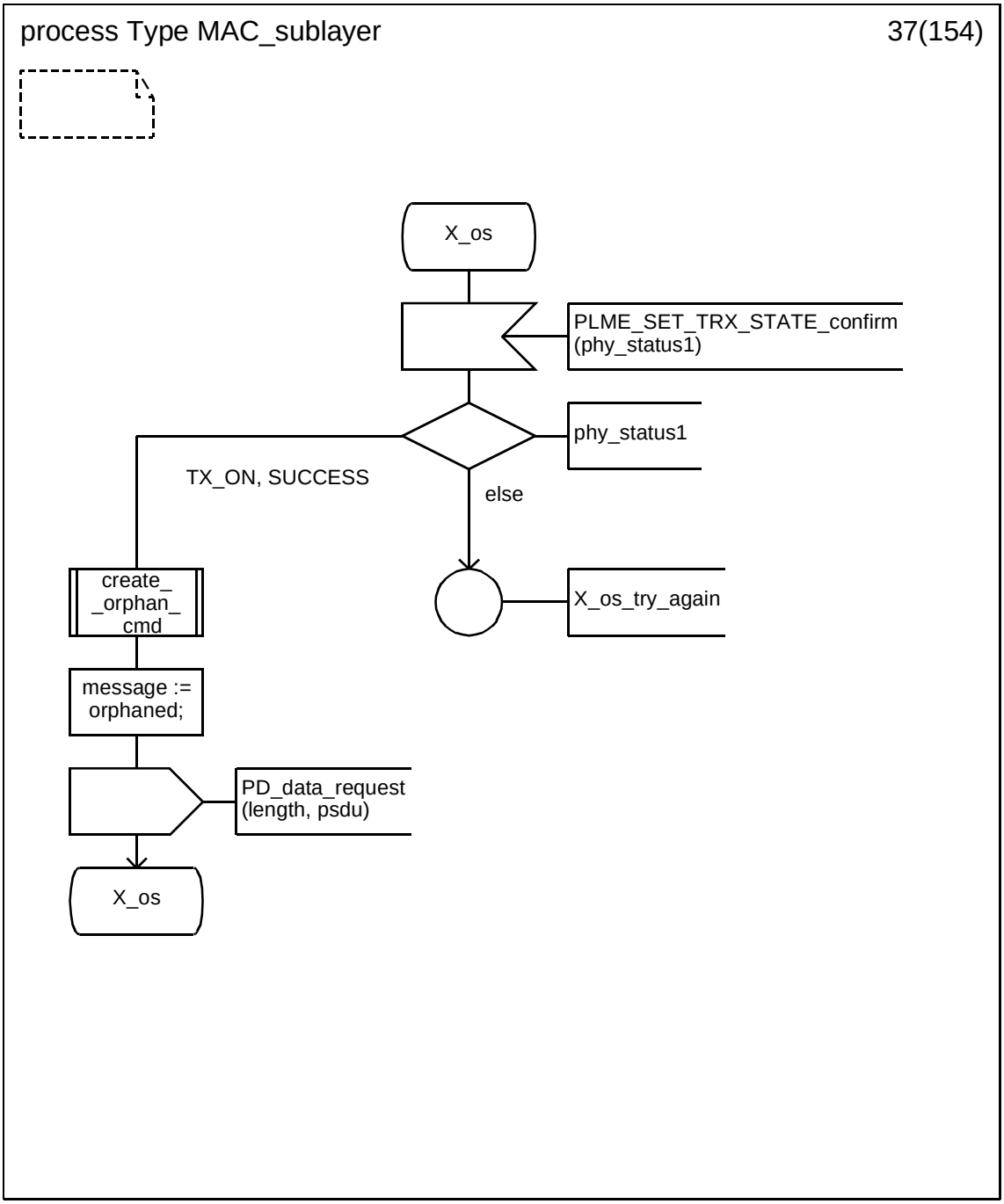


Copyright © 2003 IEEE. All rights reserved.

Authorized licensed use limited to: IEEE - Staff. Downloaded on October 28,2024 at 20:20:02 UTC from IEEE Xplore. Restrictions apply.

INTEL-1011
U.S. Patent 8,219,129

### D.3.1.38 Process type MAC_sublayer (38)

.

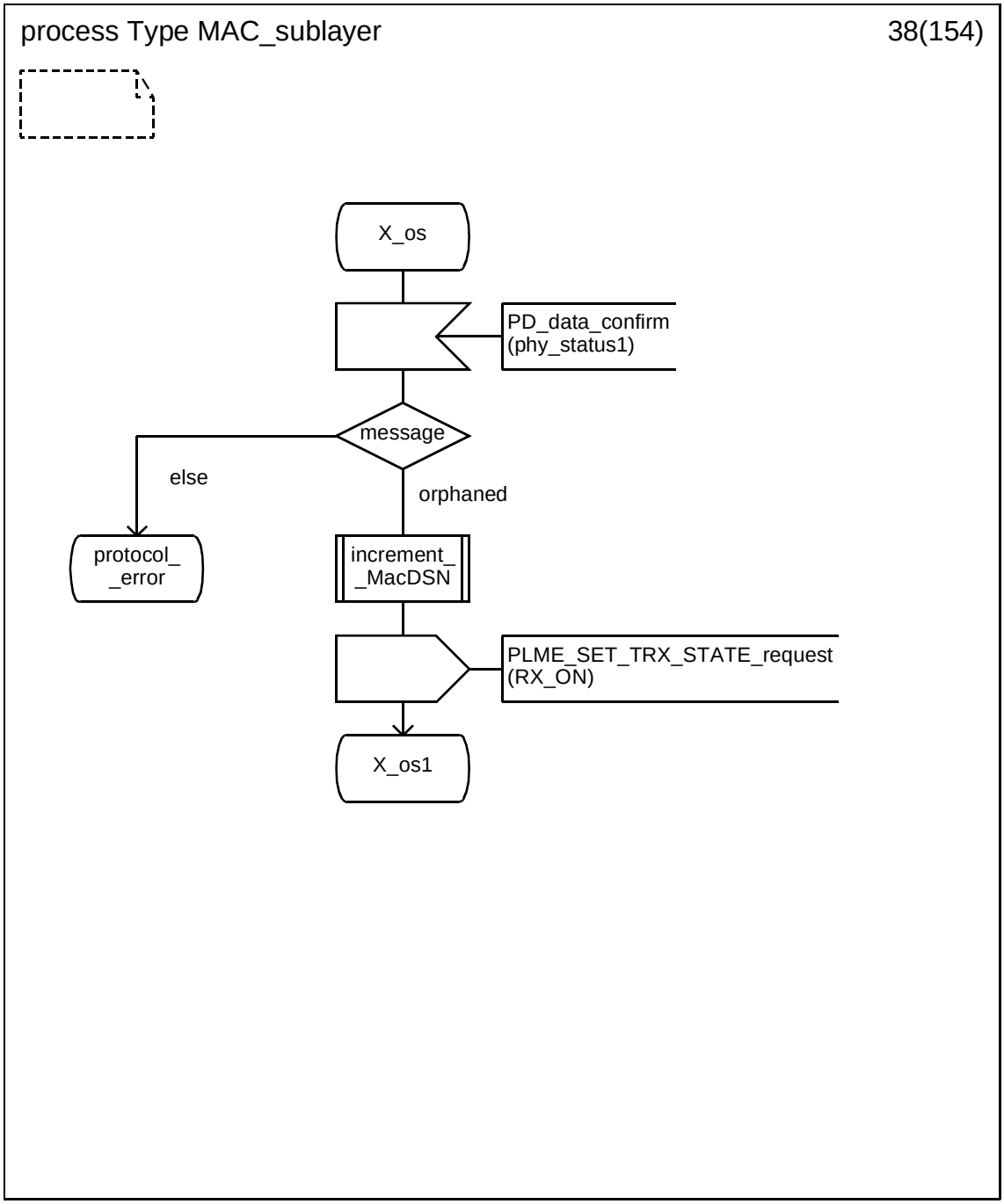



Copyright © 2003 IEEE. All rights reserved.
Authorized licensed use limited to: IEEE - Staff. Downloaded on October 28,2024 at 20:20:02 UTC from IEEE Xplore. Restrictions apply.

INTEL-1011
U.S. Patent 8,219,129

### D.3.1.39 Process type MAC_sublayer (39)

.

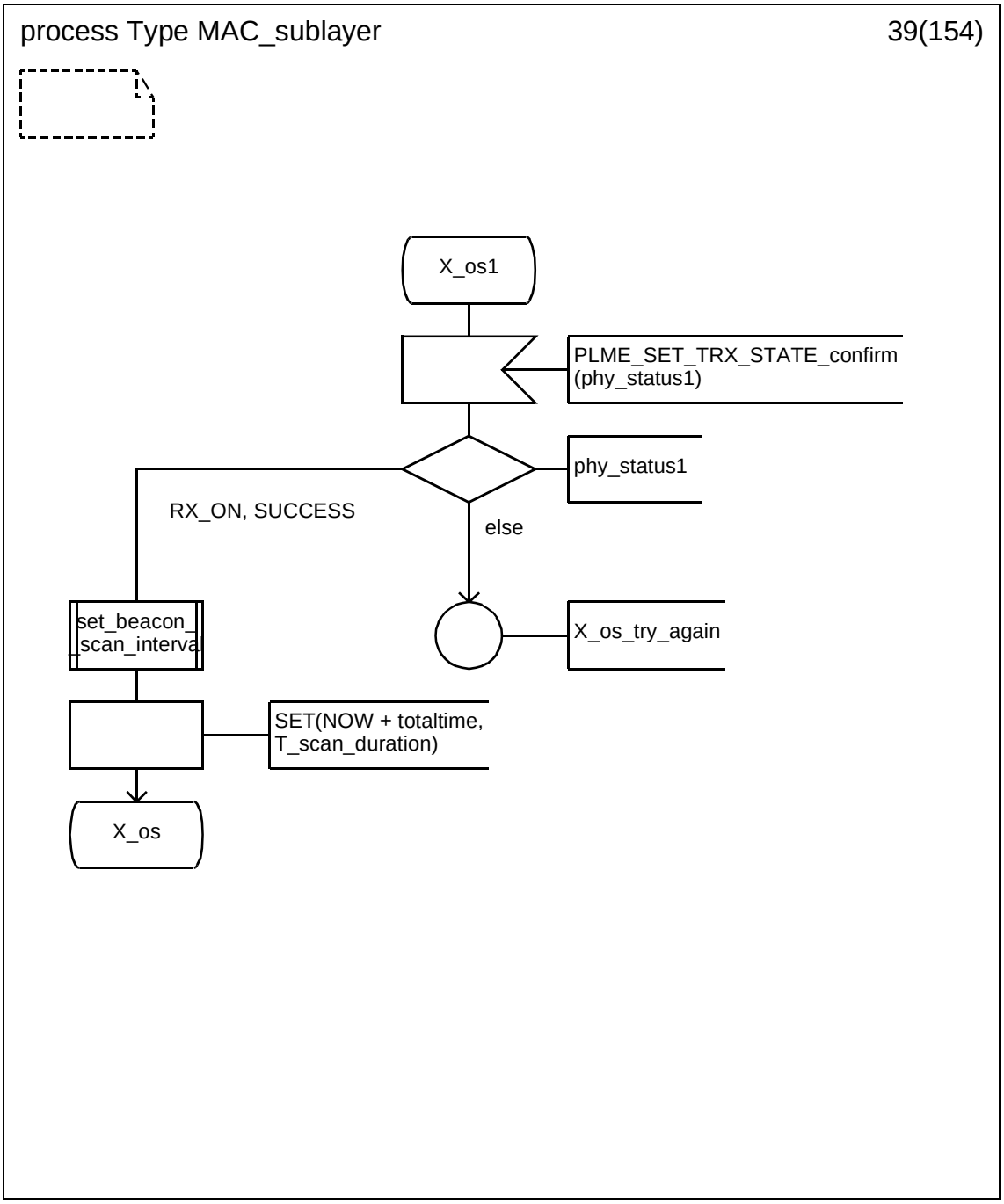


Copyright © 2003 IEEE. All rights reserved.

Authorized licensed use limited to: IEEE - Staff. Downloaded on October 28,2024 at 20:20:02 UTC from IEEE Xplore. Restrictions apply.

INTEL-1011
U.S. Patent 8,219,129

### D.3.1.40 Process type MAC_sublayer (40)

.

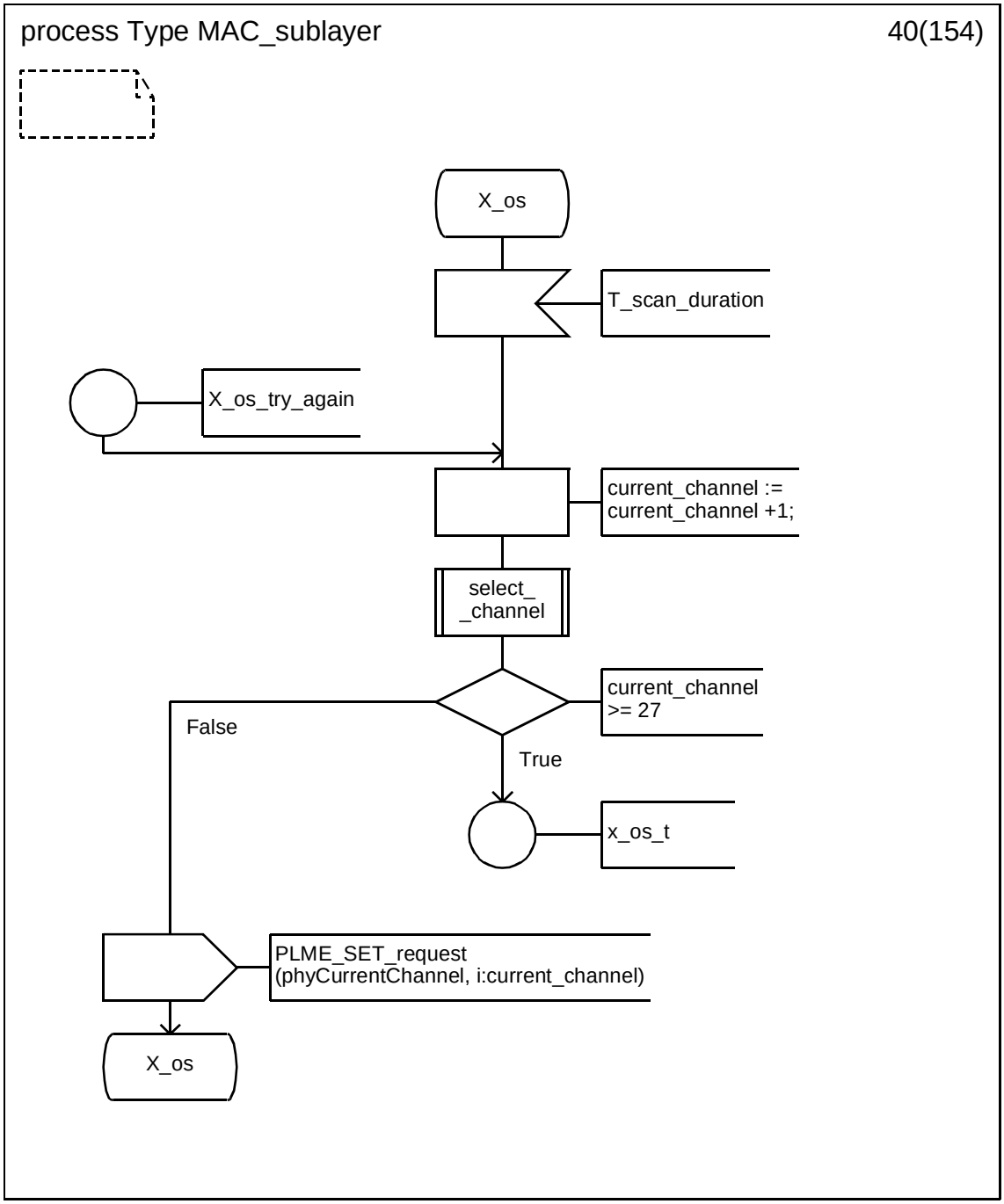



Copyright © 2003 IEEE. All rights reserved.
Authorized licensed use limited to: IEEE - Staff. Downloaded on October 28,2024 at 20:20:02 UTC from IEEE Xplore. Restrictions apply.

INTEL-1011
U.S. Patent 8,219,129

### D.3.1.41 Process type MAC_sublayer (41)

.

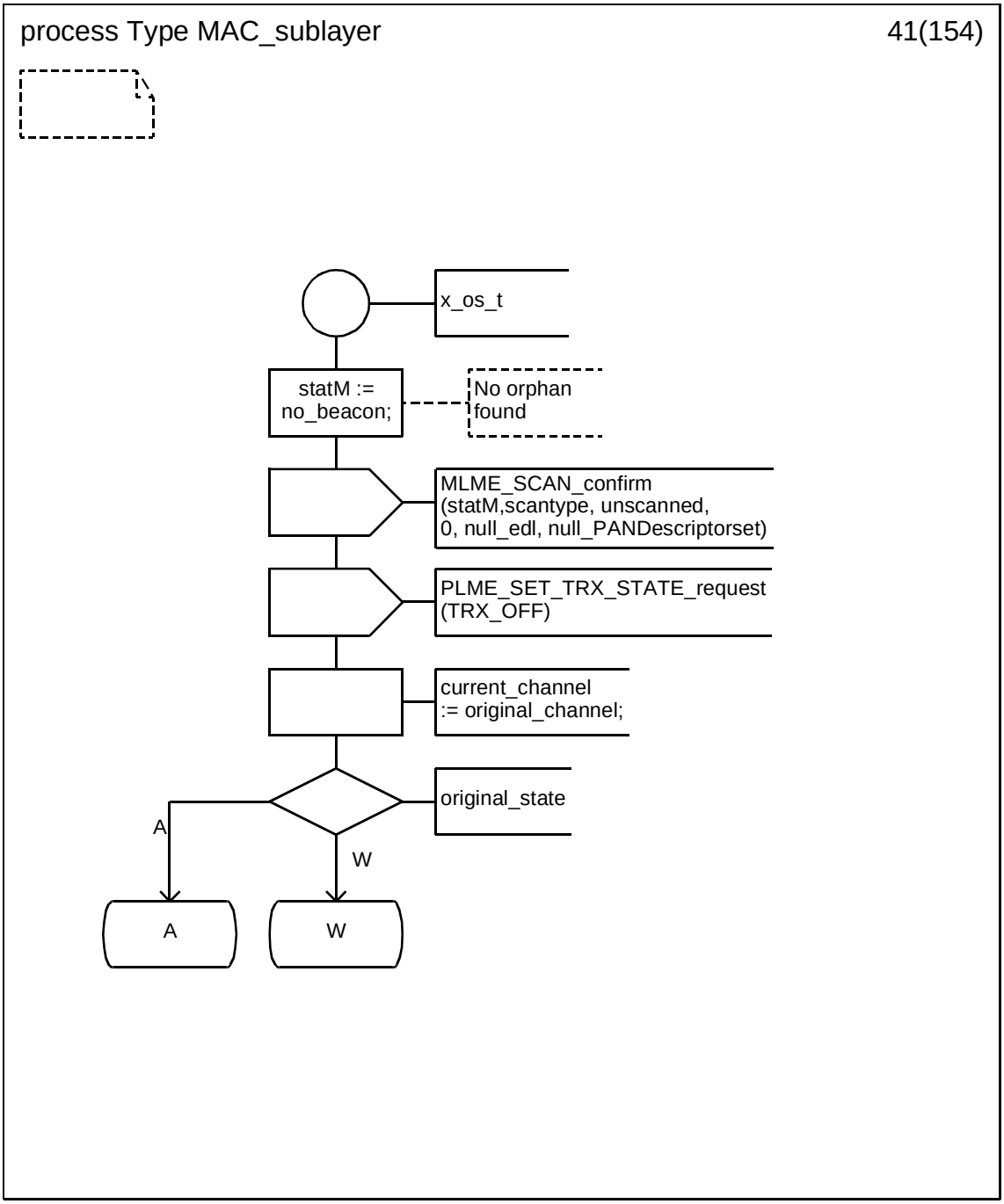


Copyright © 2003 IEEE. All rights reserved.

Authorized licensed use limited to: IEEE - Staff. Downloaded on October 28,2024 at 20:20:02 UTC from IEEE Xplore. Restrictions apply.

INTEL-1011
U.S. Patent 8,219,129

### D.3.1.42 Process type MAC_sublayer (42)

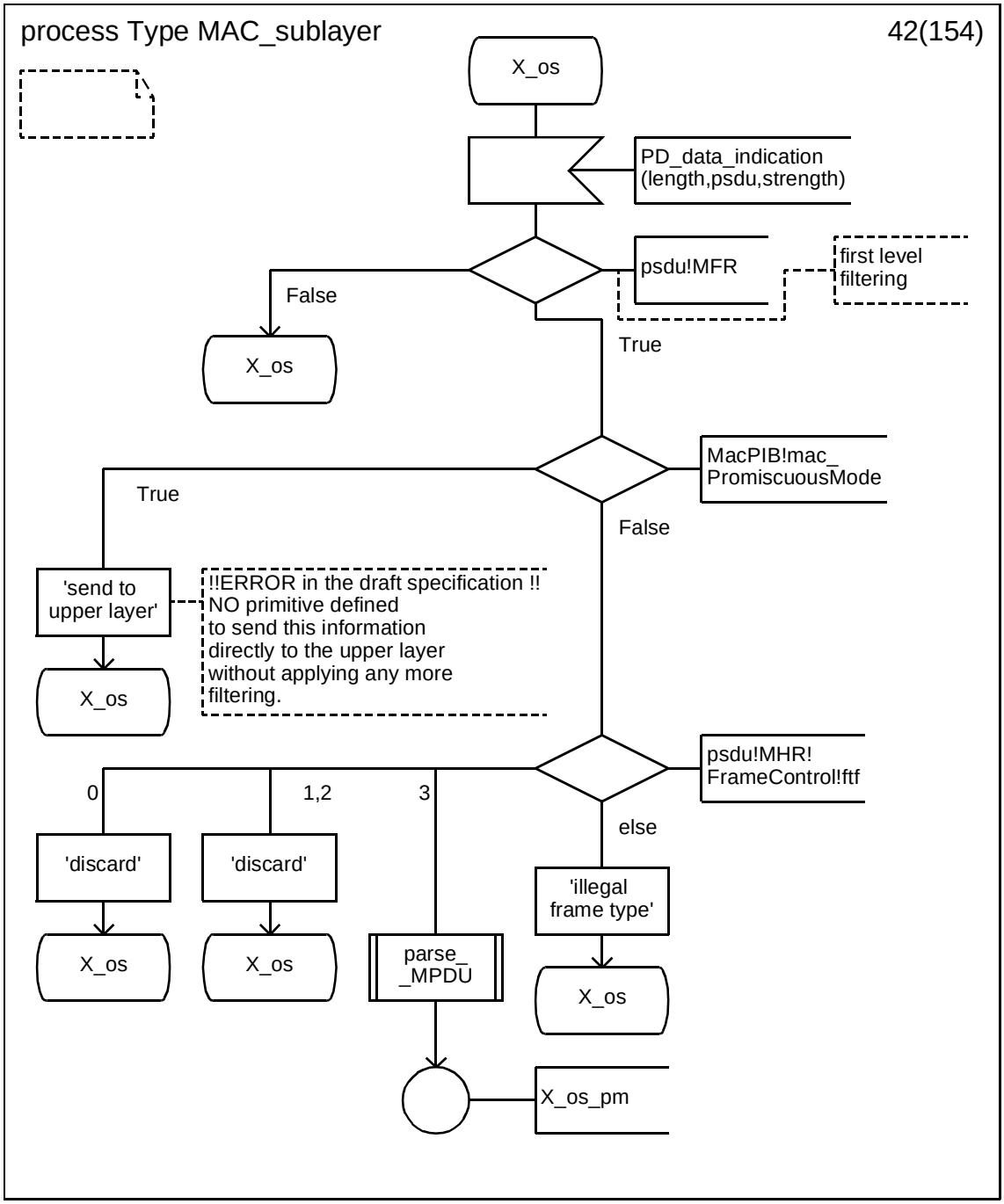



Copyright © 2003 IEEE. All rights reserved.
Authorized licensed use limited to: IEEE - Staff. Downloaded on October 28,2024 at 20:20:02 UTC from IEEE Xplore. Restrictions apply.

INTEL-1011
U.S. Patent 8,219,129

### D.3.1.43 Process type MAC_sublayer (43)

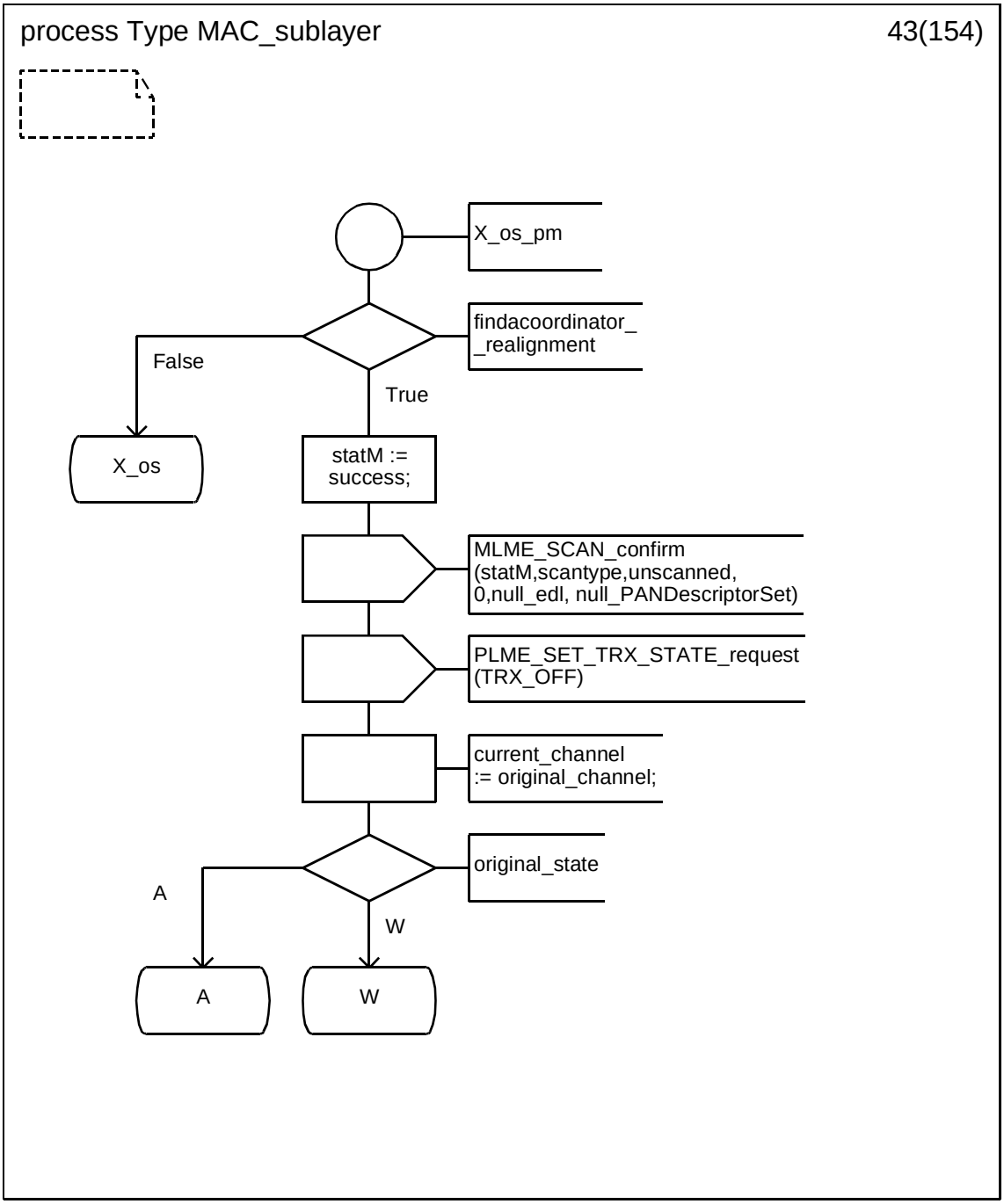


Copyright © 2003 IEEE. All rights reserved.

Authorized licensed use limited to: IEEE - Staff. Downloaded on October 28,2024 at 20:20:02 UTC from IEEE Xplore. Restrictions apply.

INTEL-1011
U.S. Patent 8,219,129

### D.3.1.44 Process type MAC_sublayer (44)

.

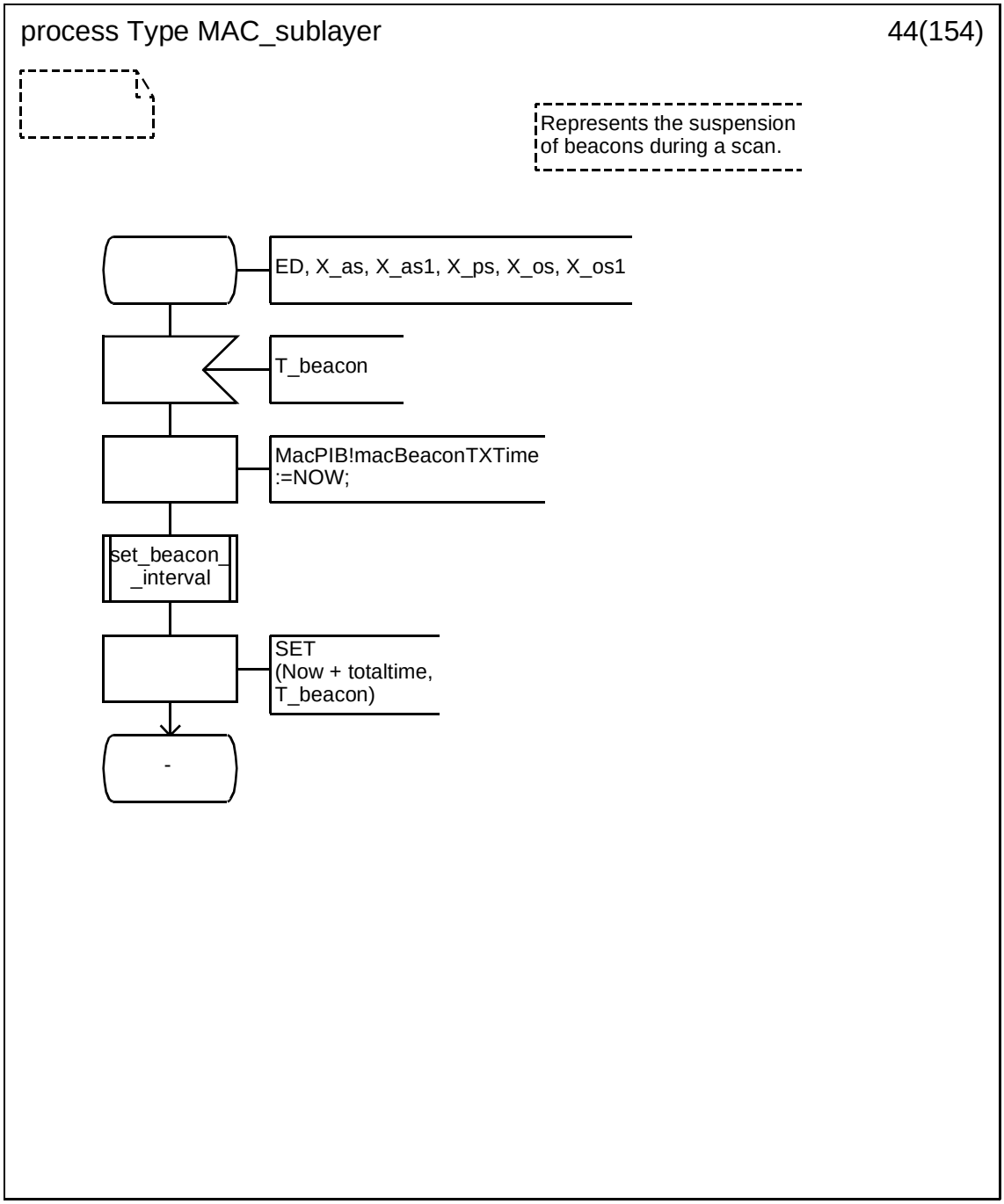



Copyright © 2003 IEEE. All rights reserved.
Authorized licensed use limited to: IEEE - Staff. Downloaded on October 28,2024 at 20:20:02 UTC from IEEE Xplore. Restrictions apply.

INTEL-1011
U.S. Patent 8,219,129

### D.3.1.45 Process type MAC_sublayer (45)

.

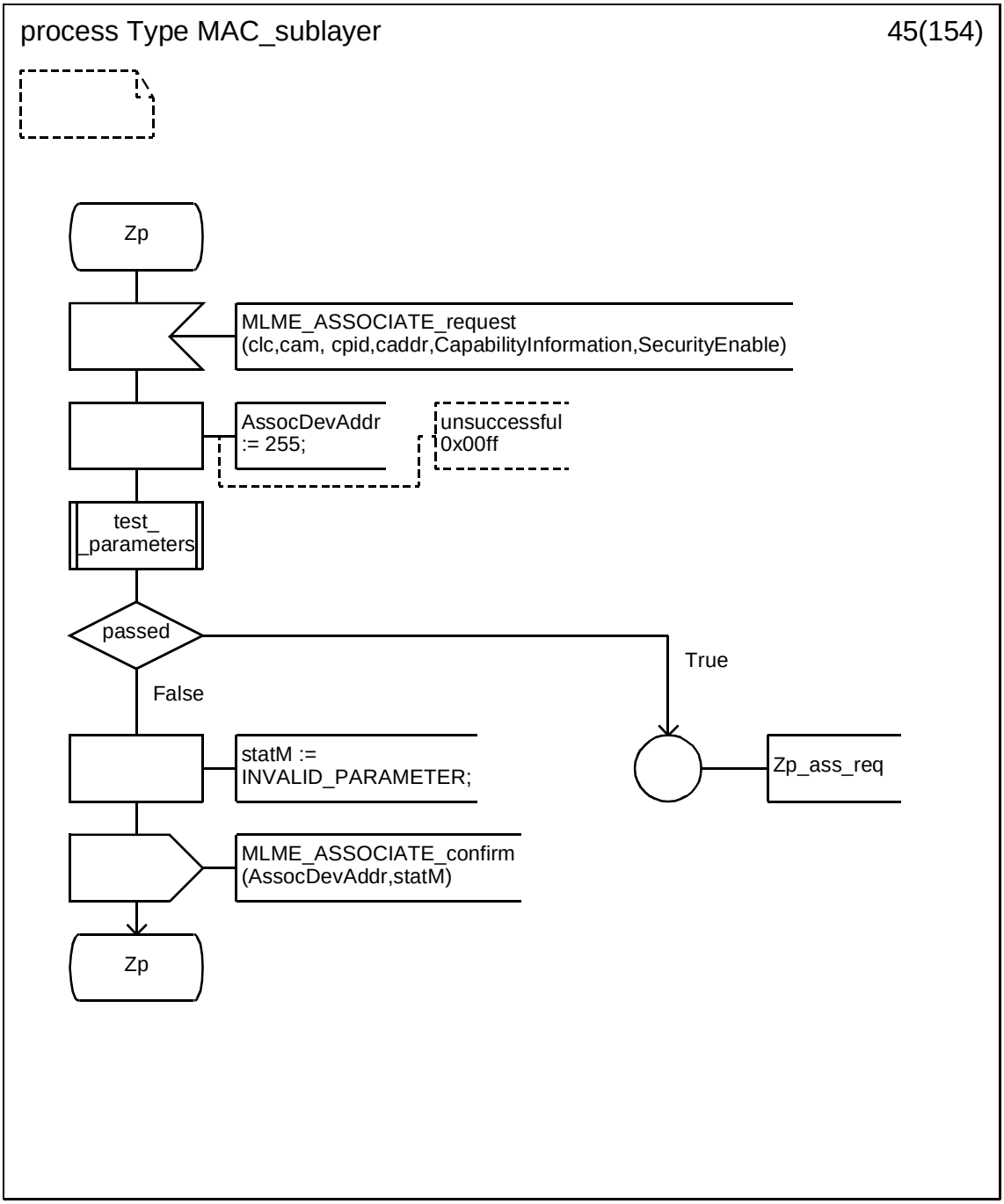


Copyright © 2003 IEEE. All rights reserved.

Authorized licensed use limited to: IEEE - Staff. Downloaded on October 28,2024 at 20:20:02 UTC from IEEE Xplore. Restrictions apply.

INTEL-1011
U.S. Patent 8,219,129

### D.3.1.46 Process type MAC_sublayer (46)

.

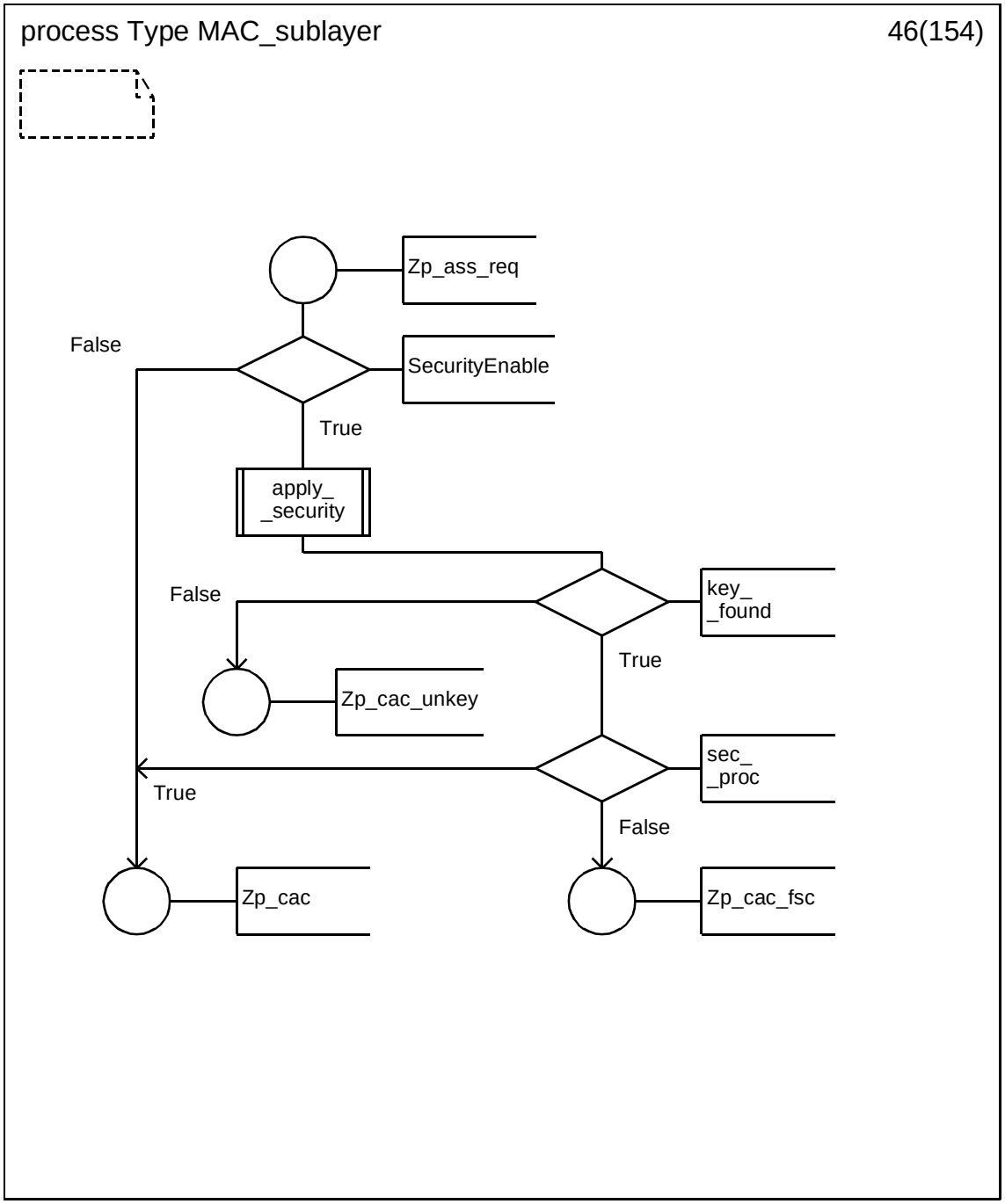



Copyright © 2003 IEEE. All rights reserved.
Authorized licensed use limited to: IEEE - Staff. Downloaded on October 28,2024 at 20:20:02 UTC from IEEE Xplore. Restrictions apply.

INTEL-1011
U.S. Patent 8,219,129

### D.3.1.47 Process type MAC_sublayer (47)

.

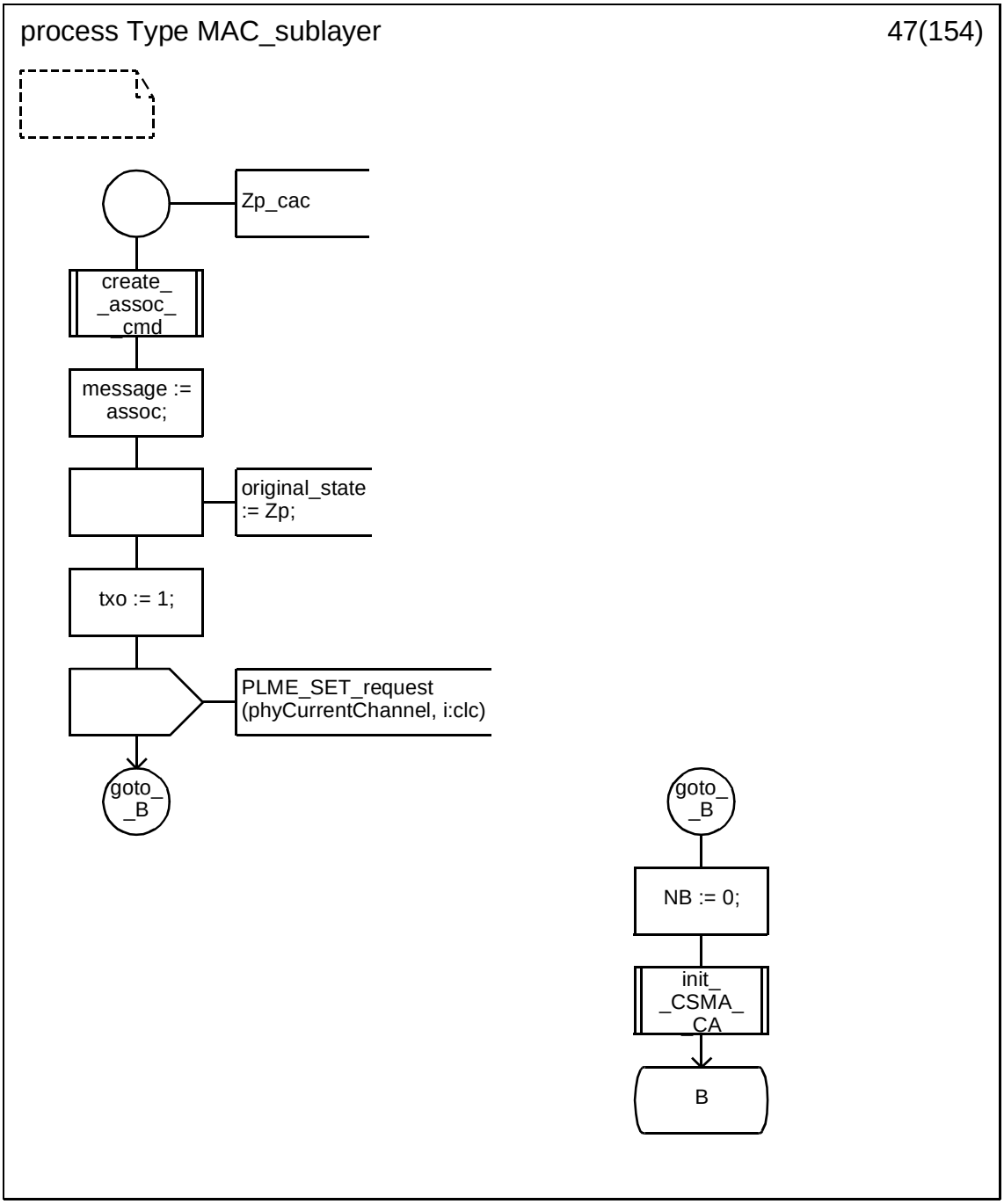


Copyright © 2003 IEEE. All rights reserved.

Authorized licensed use limited to: IEEE - Staff. Downloaded on October 28,2024 at 20:20:02 UTC from IEEE Xplore. Restrictions apply.

INTEL-1011
U.S. Patent 8,219,129

### D.3.1.48 Process type MAC_sublayer (48)

.

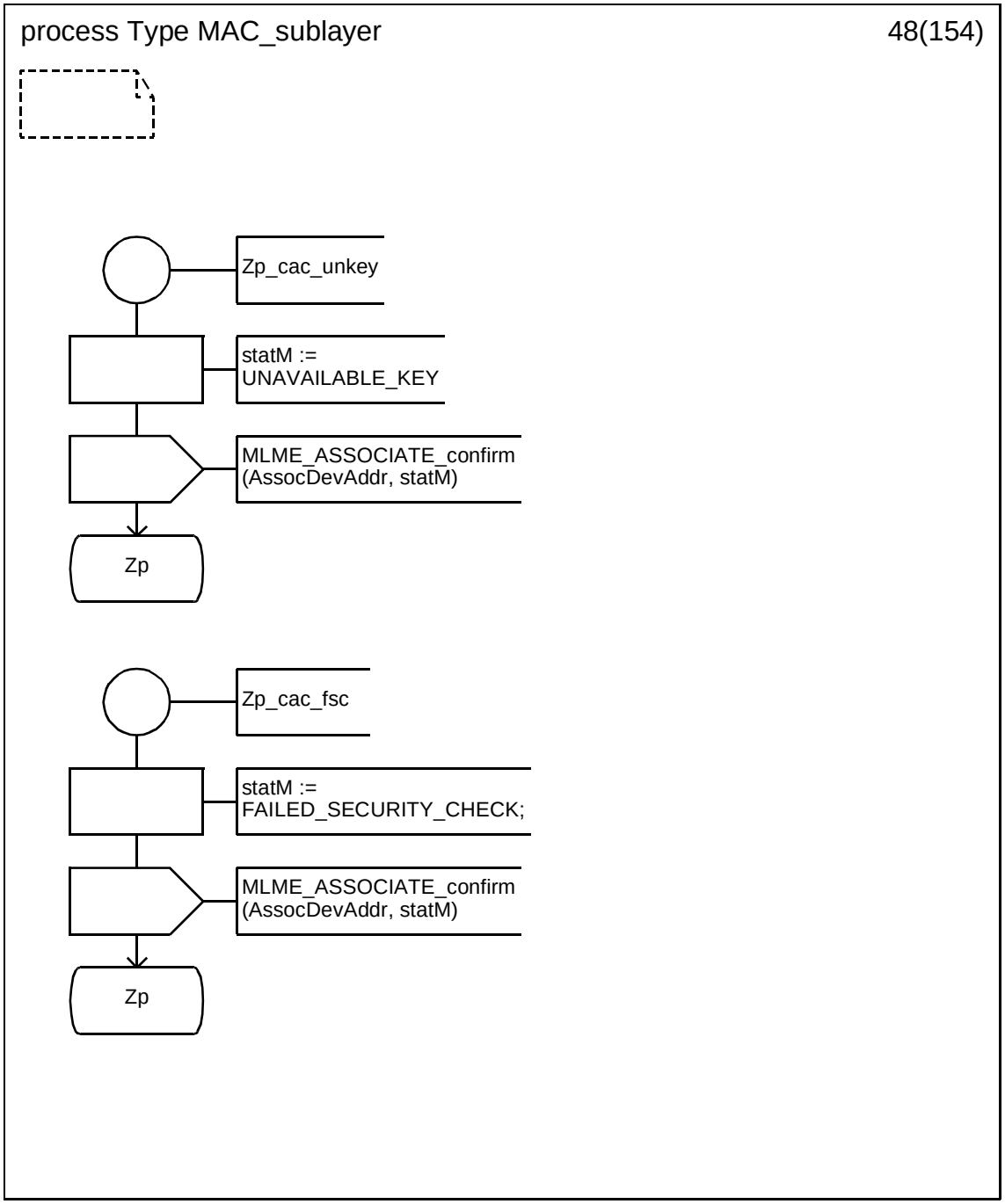



Copyright © 2003 IEEE. All rights reserved.
Authorized licensed use limited to: IEEE - Staff. Downloaded on October 28,2024 at 20:20:02 UTC from IEEE Xplore. Restrictions apply.

INTEL-1011
U.S. Patent 8,219,129

### D.3.1.49 Process type MAC_sublayer (49)

.

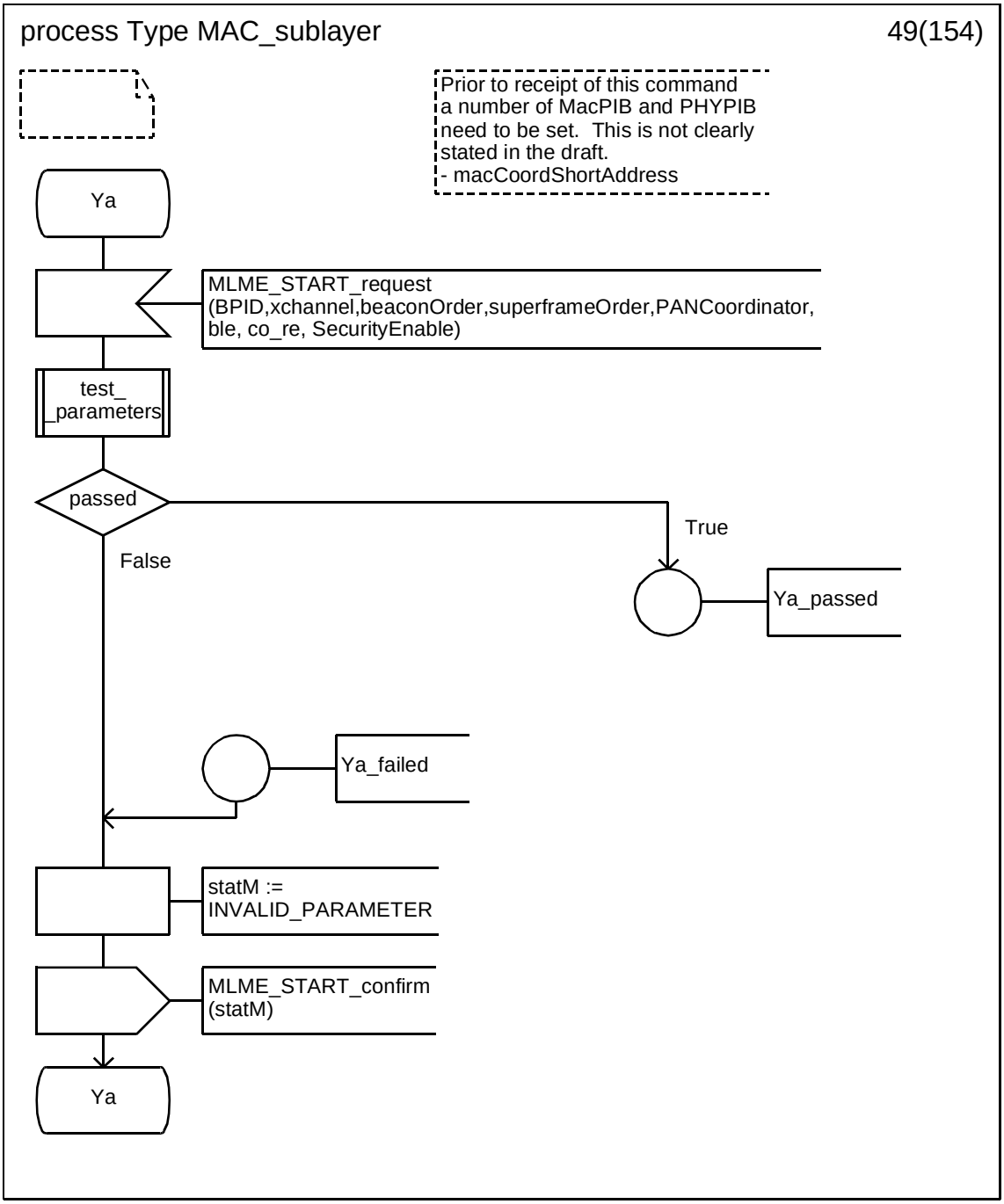


Copyright © 2003 IEEE. All rights reserved.

Authorized licensed use limited to: IEEE - Staff. Downloaded on October 28,2024 at 20:20:02 UTC from IEEE Xplore. Restrictions apply.

INTEL-1011
U.S. Patent 8,219,129

### D.3.1.50 Process type MAC_sublayer (50)

.

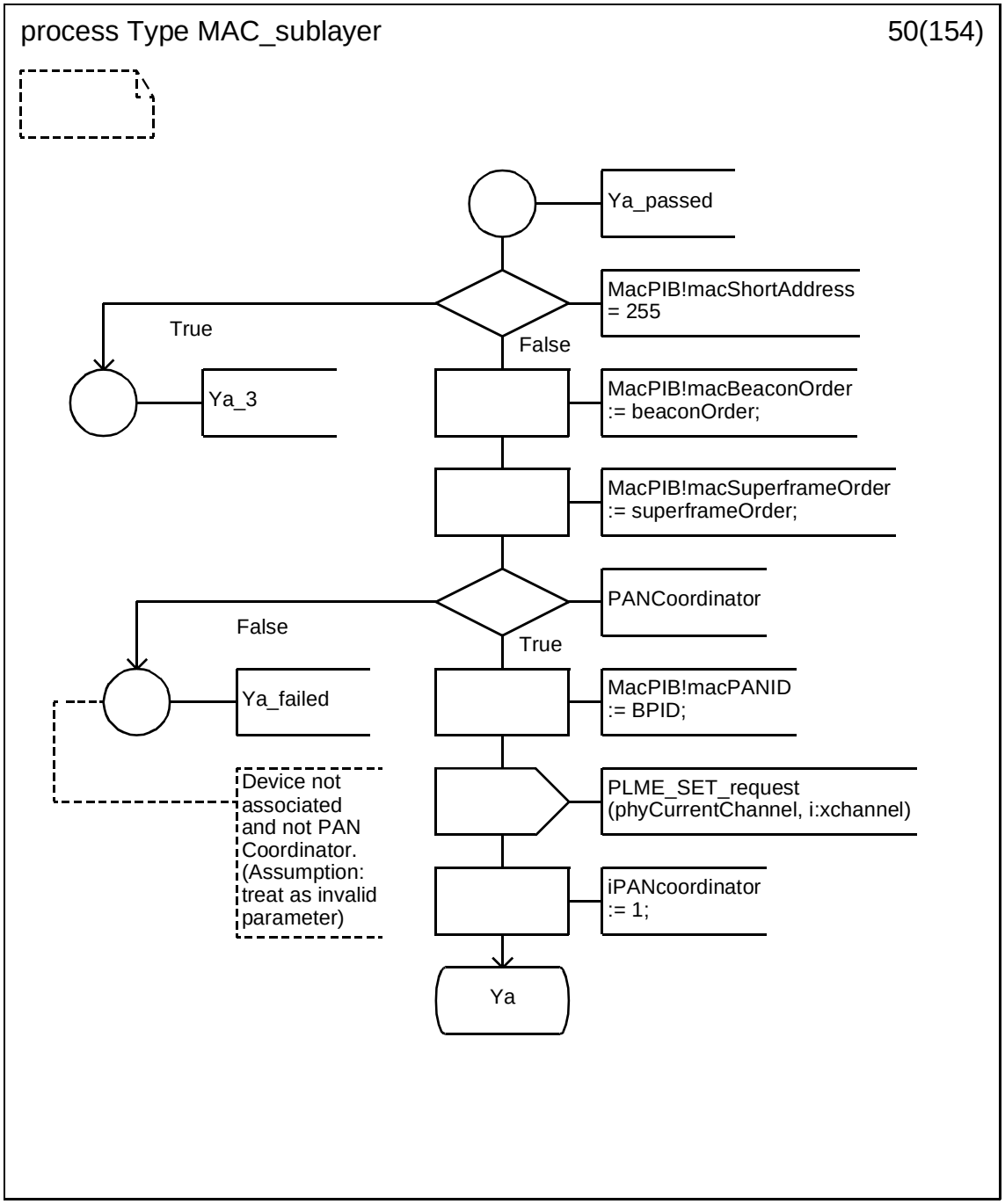



Copyright © 2003 IEEE. All rights reserved.
Authorized licensed use limited to: IEEE - Staff. Downloaded on October 28,2024 at 20:20:02 UTC from IEEE Xplore. Restrictions apply.

INTEL-1011
U.S. Patent 8,219,129

### D.3.1.51 Process type MAC_sublayer (51)

.

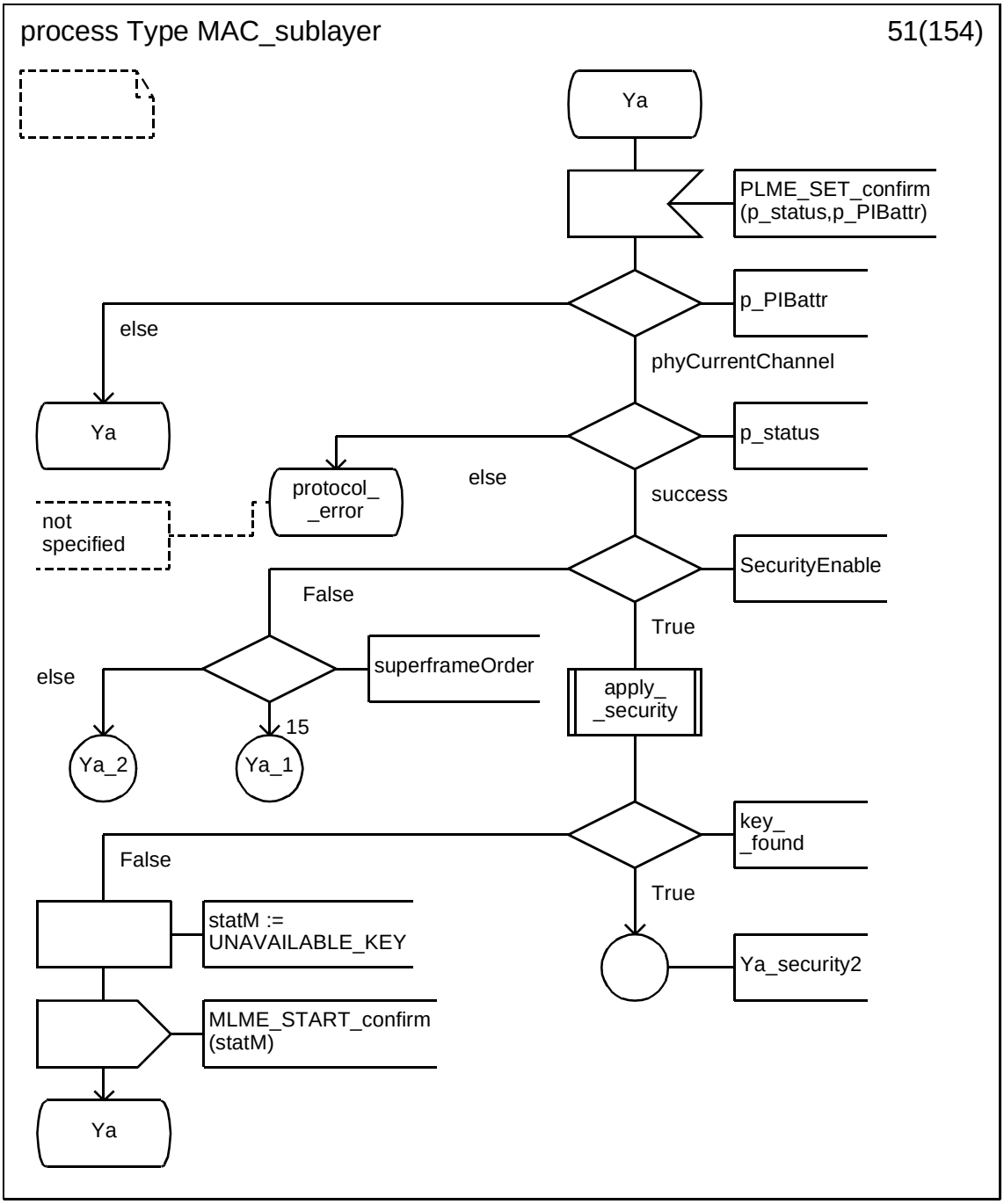


Copyright © 2003 IEEE. All rights reserved.
Authorized licensed use limited to: IEEE - Staff. Downloaded on October 28,2024 at 20:20:02 UTC from IEEE Xplore. Restrictions apply.


INTEL-1011
U.S. Patent 8,219,129

### D.3.1.52 Process type MAC_sublayer (52)

.

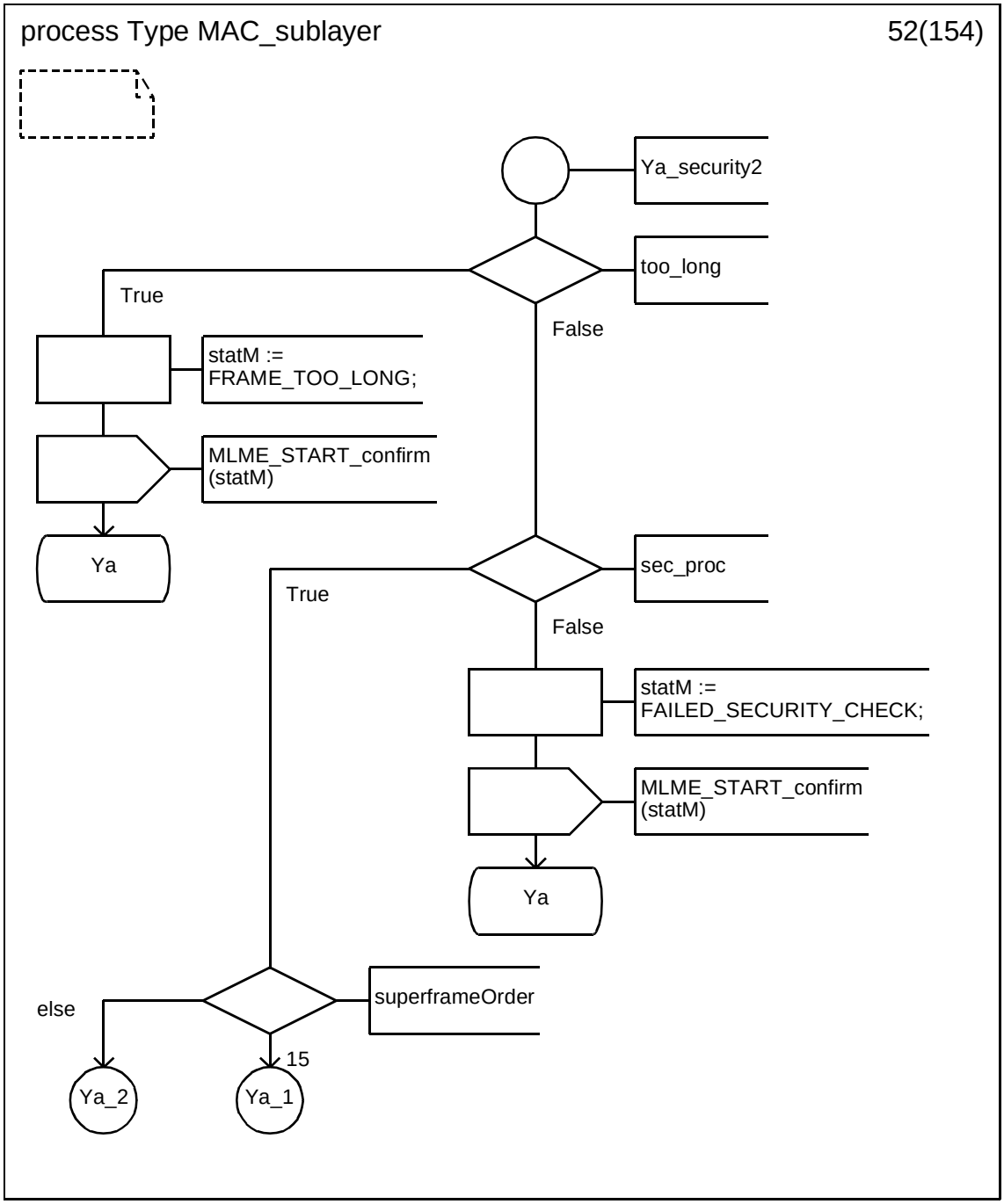



Copyright © 2003 IEEE. All rights reserved.
Authorized licensed use limited to: IEEE - Staff. Downloaded on October 28,2024 at 20:20:02 UTC from IEEE Xplore. Restrictions apply.

INTEL-1011
U.S. Patent 8,219,129

### D.3.1.53 Process type MAC_sublayer (53)

.

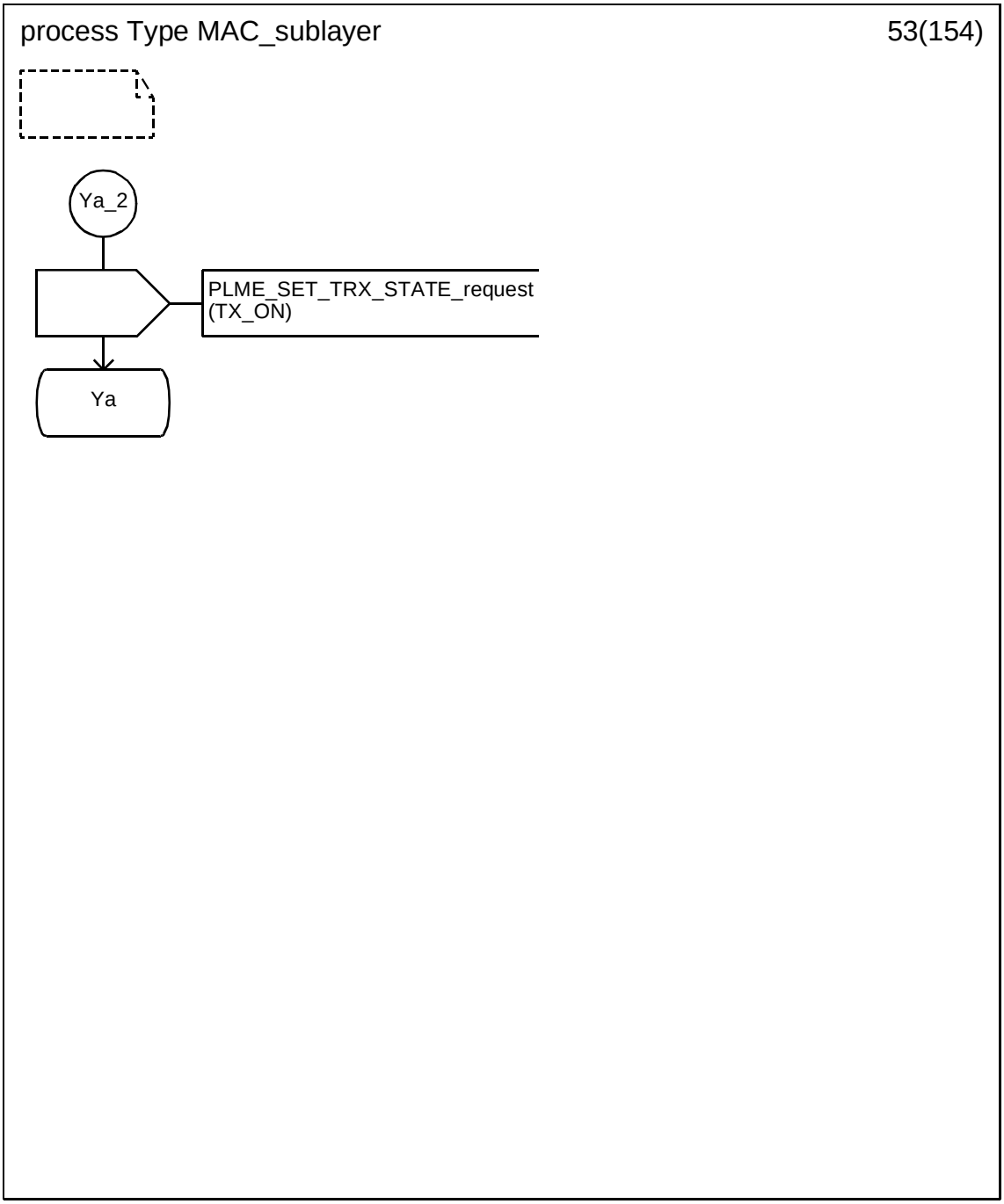


Copyright © 2003 IEEE. All rights reserved.

Authorized licensed use limited to: IEEE - Staff. Downloaded on October 28,2024 at 20:20:02 UTC from IEEE Xplore. Restrictions apply.

INTEL-1011
U.S. Patent 8,219,129

### D.3.1.54 Process type MAC_sublayer (54)

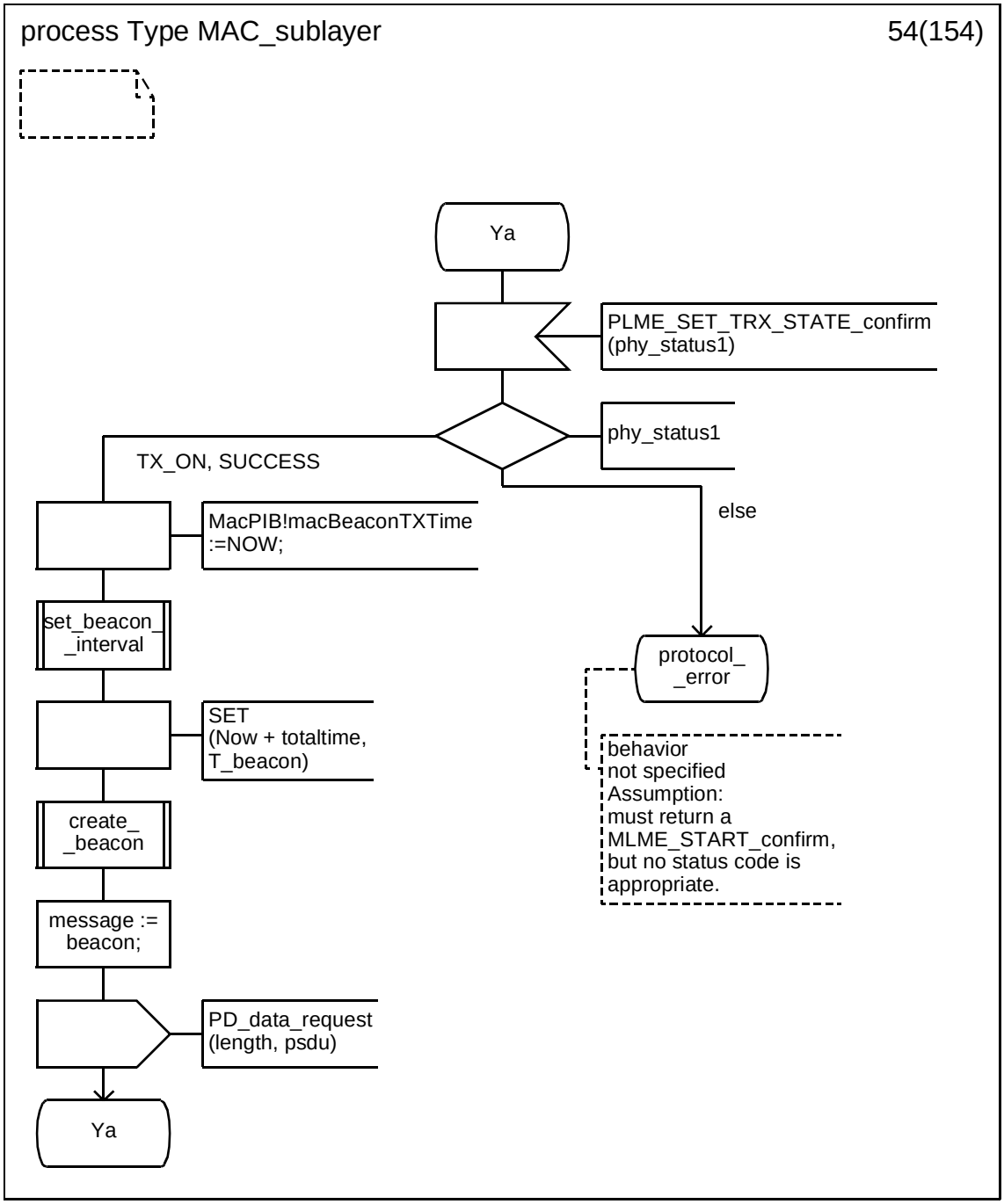



Copyright © 2003 IEEE. All rights reserved.
Authorized licensed use limited to: IEEE - Staff. Downloaded on October 28,2024 at 20:20:02 UTC from IEEE Xplore. Restrictions apply.

INTEL-1011
U.S. Patent 8,219,129

### D.3.1.55 Process type MAC_sublayer (55)

.

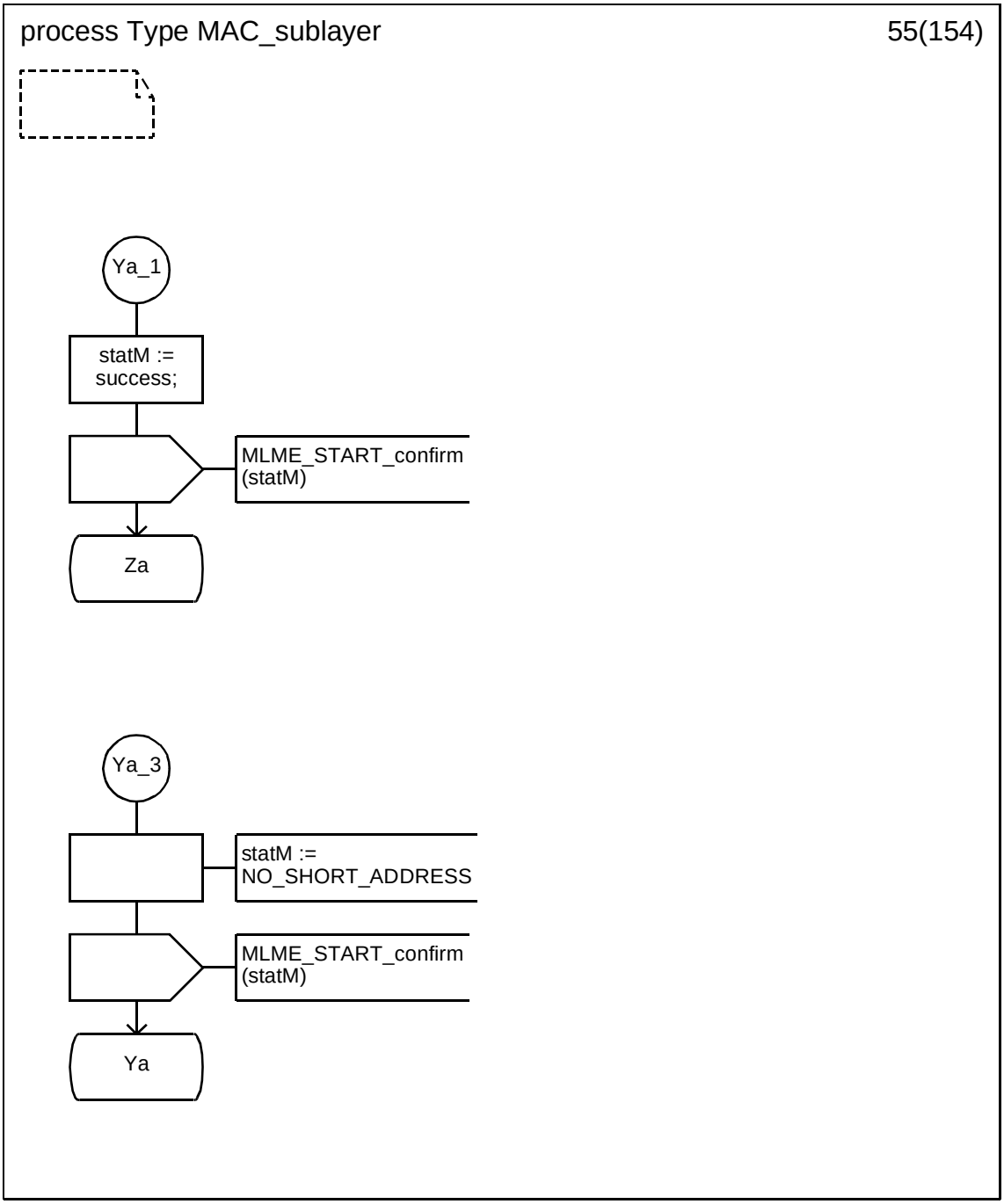


Copyright © 2003 IEEE. All rights reserved.

Authorized licensed use limited to: IEEE - Staff. Downloaded on October 28,2024 at 20:20:02 UTC from IEEE Xplore. Restrictions apply.

INTEL-1011
U.S. Patent 8,219,129

### D.3.1.56 Process type MAC_sublayer (56)

.

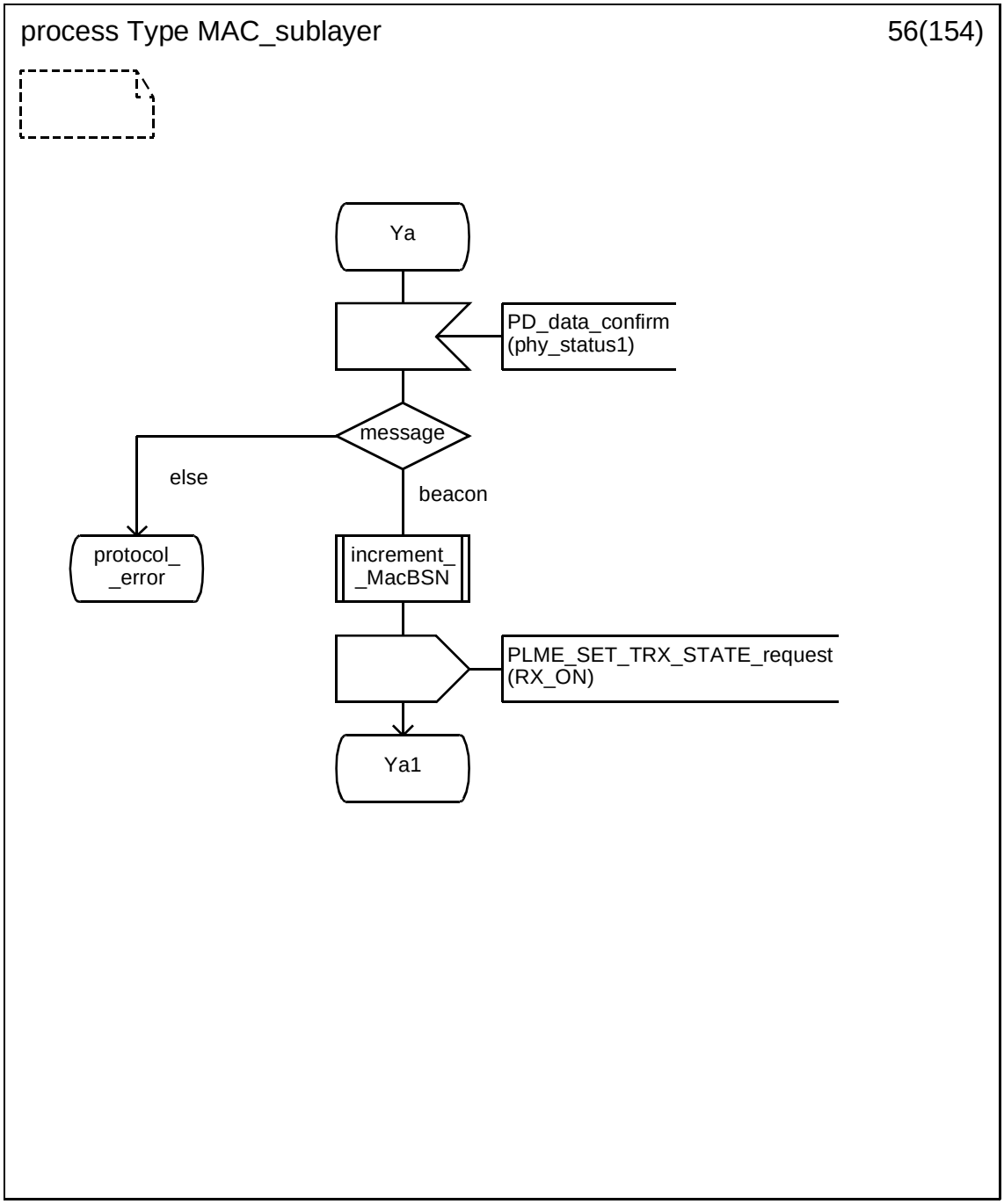



Copyright © 2003 IEEE. All rights reserved.
Authorized licensed use limited to: IEEE - Staff. Downloaded on October 28,2024 at 20:20:02 UTC from IEEE Xplore. Restrictions apply.

INTEL-1011
U.S. Patent 8,219,129

### D.3.1.57 Process type MAC_sublayer (57)

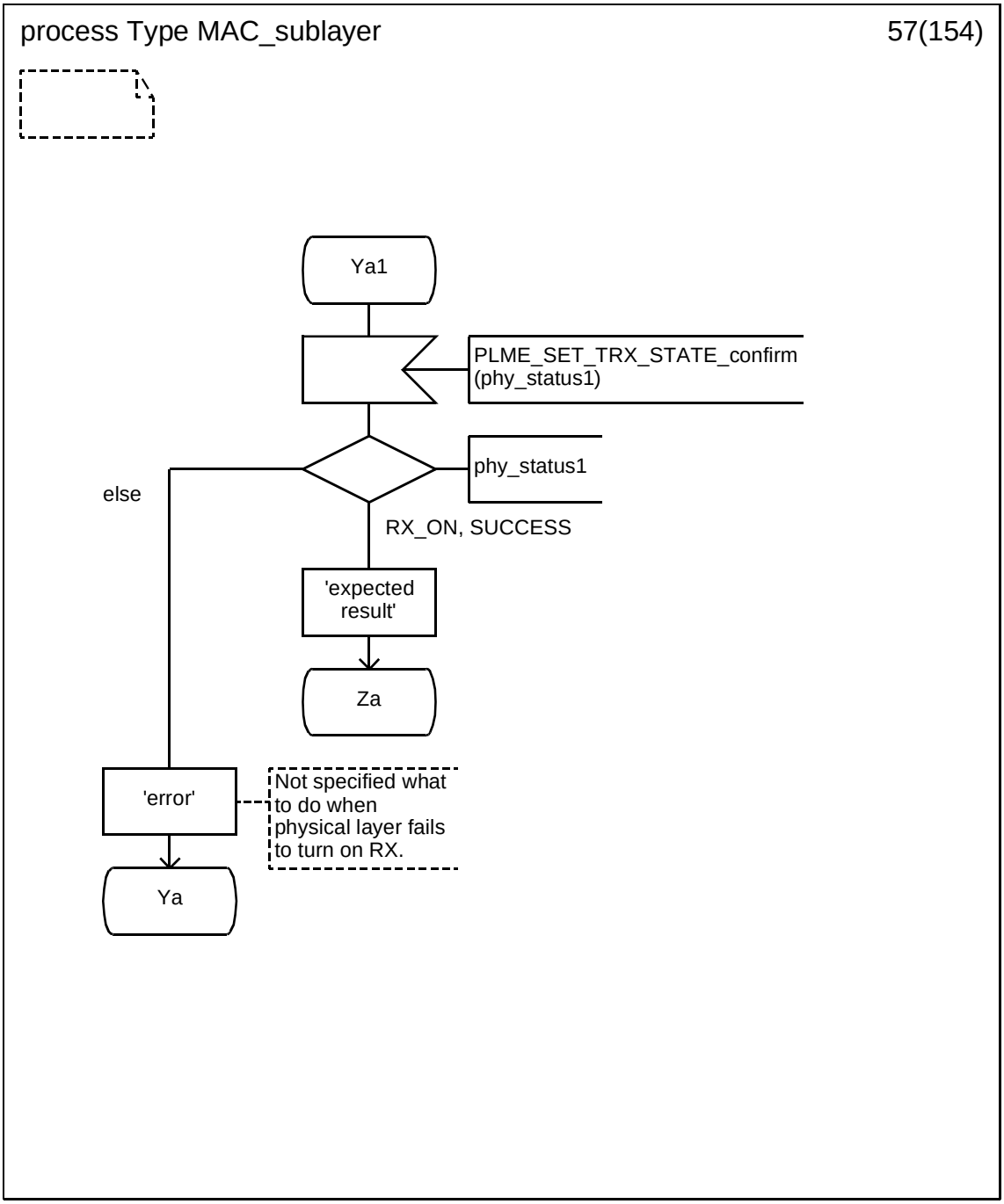


Copyright © 2003 IEEE. All rights reserved.

Authorized licensed use limited to: IEEE - Staff. Downloaded on October 28,2024 at 20:20:02 UTC from IEEE Xplore. Restrictions apply.

INTEL-1011
U.S. Patent 8,219,129

### D.3.1.58 Process type MAC_sublayer (58)

.

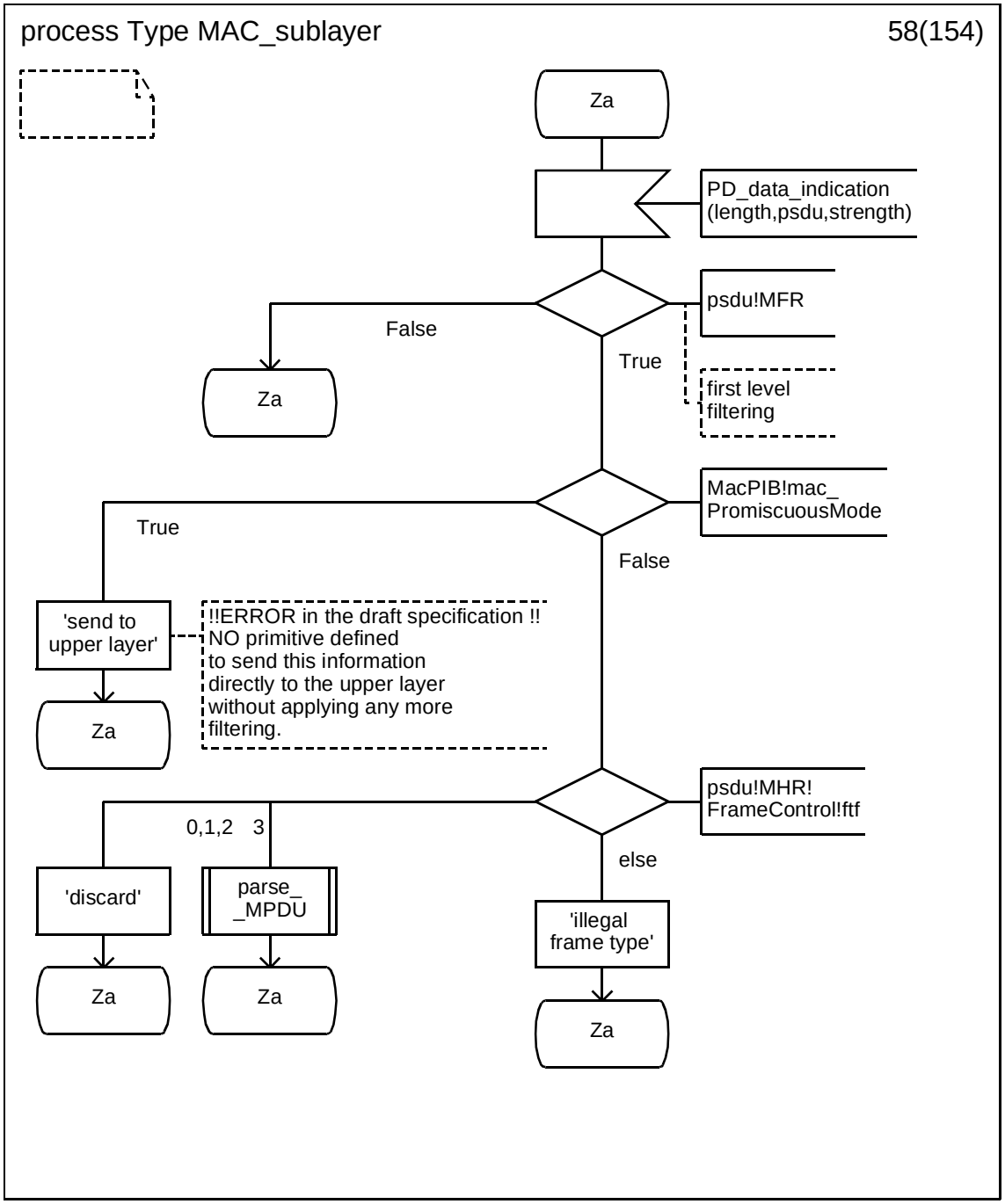



Copyright © 2003 IEEE. All rights reserved.
Authorized licensed use limited to: IEEE - Staff. Downloaded on October 28,2024 at 20:20:02 UTC from IEEE Xplore. Restrictions apply.

INTEL-1011
U.S. Patent 8,219,129

### D.3.1.59 Process type MAC_sublayer (59)

.

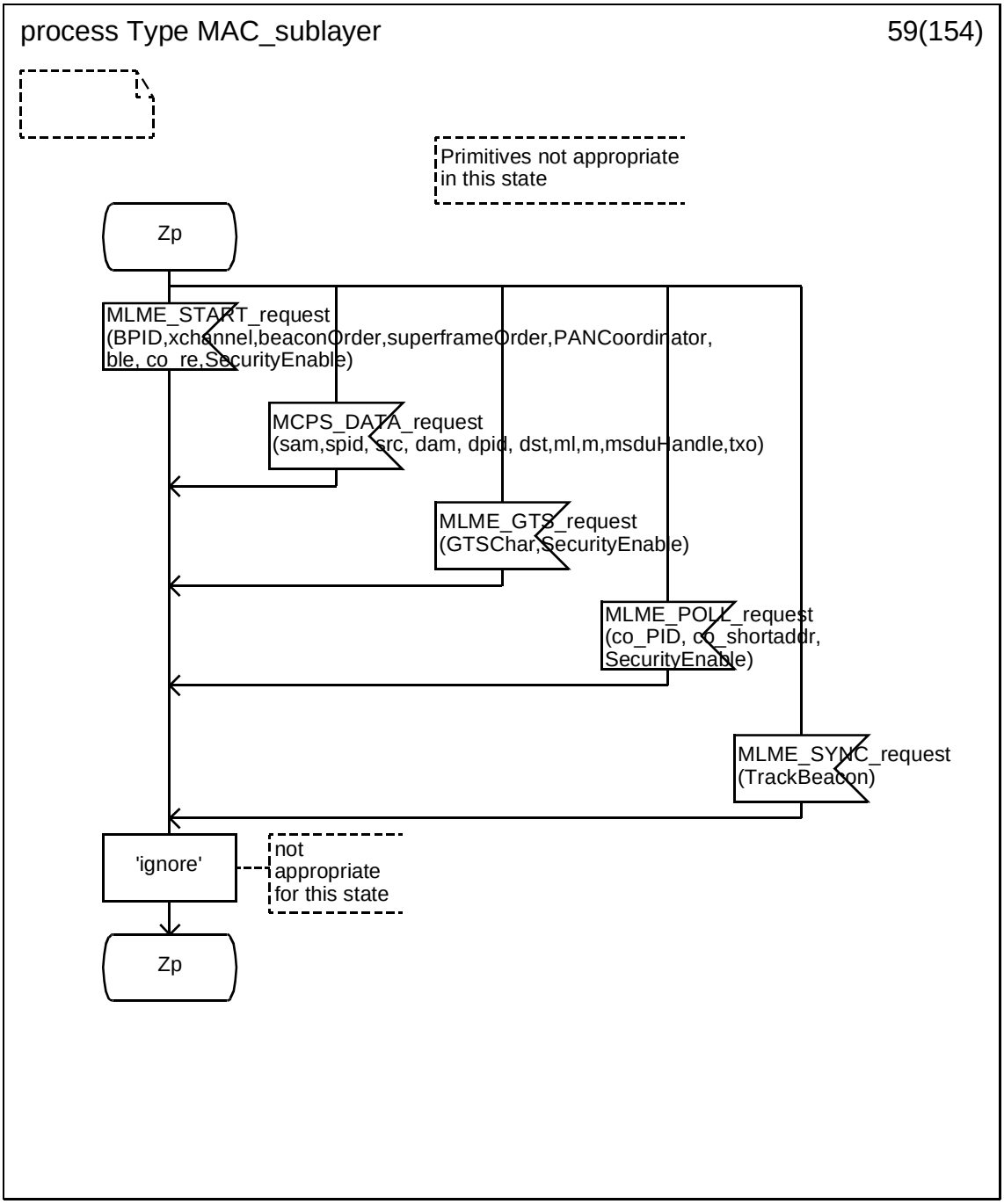


Copyright © 2003 IEEE. All rights reserved.

Authorized licensed use limited to: IEEE - Staff. Downloaded on October 28,2024 at 20:20:02 UTC from IEEE Xplore. Restrictions apply.

INTEL-1011
U.S. Patent 8,219,129

### D.3.1.60 Process type MAC_sublayer (60)

.

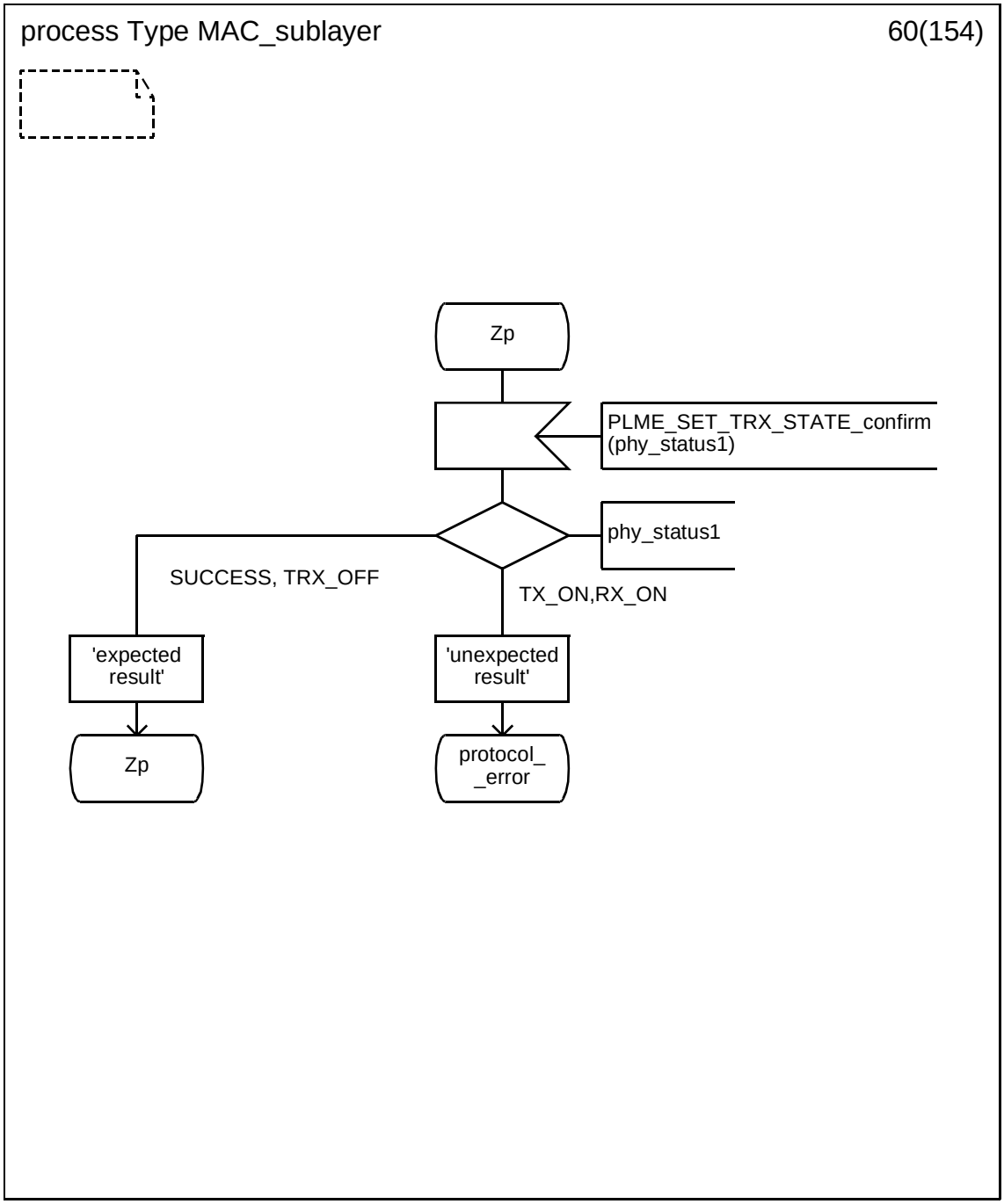



Copyright © 2003 IEEE. All rights reserved.
Authorized licensed use limited to: IEEE - Staff. Downloaded on October 28,2024 at 20:20:02 UTC from IEEE Xplore. Restrictions apply.

INTEL-1011
U.S. Patent 8,219,129

### D.3.1.61 Process type MAC_sublayer (61)

.

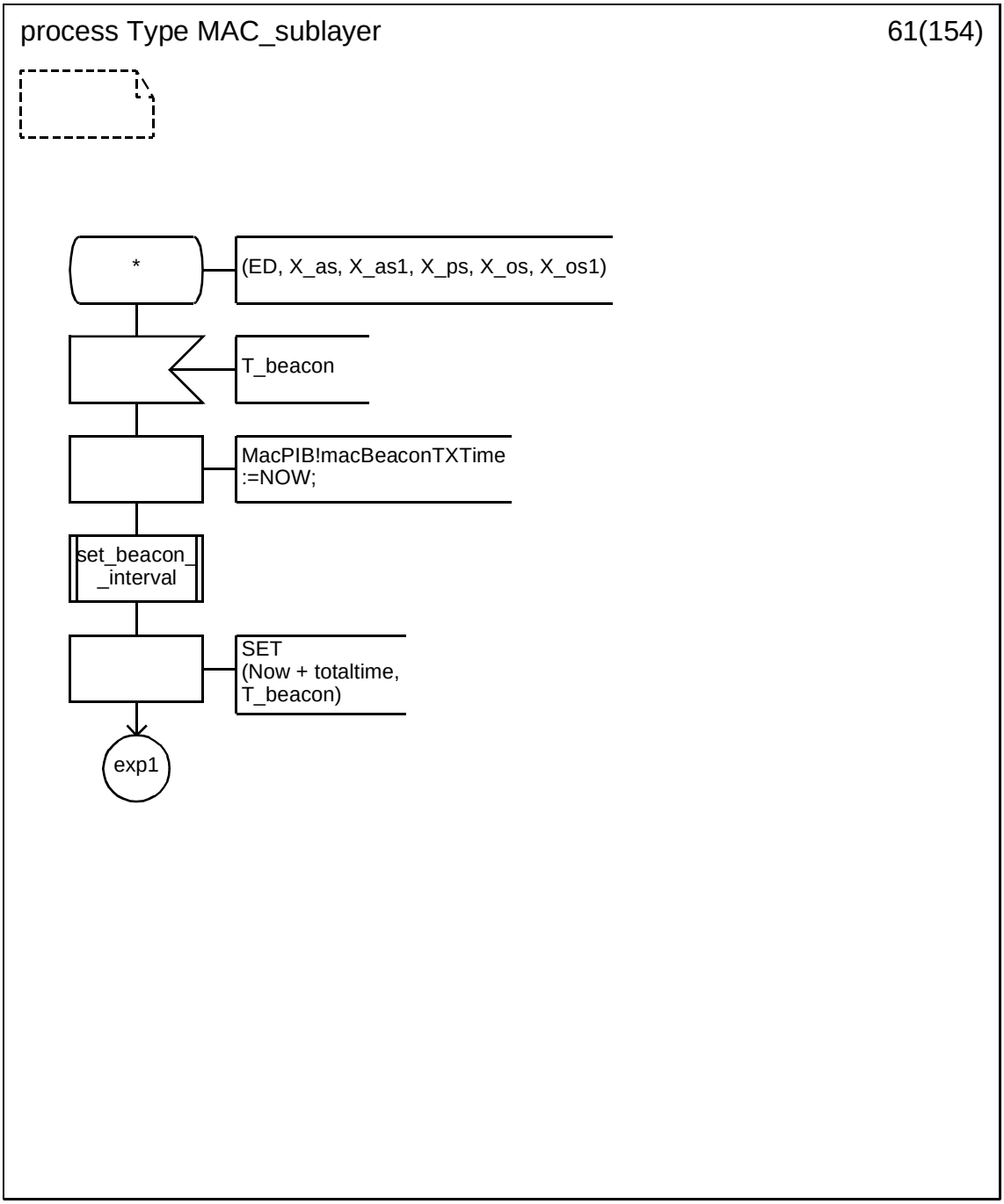


Copyright © 2003 IEEE. All rights reserved.

Authorized licensed use limited to: IEEE - Staff. Downloaded on October 28,2024 at 20:20:02 UTC from IEEE Xplore. Restrictions apply.

INTEL-1011
U.S. Patent 8,219,129

### D.3.1.62 Process type MAC_sublayer (62)

.

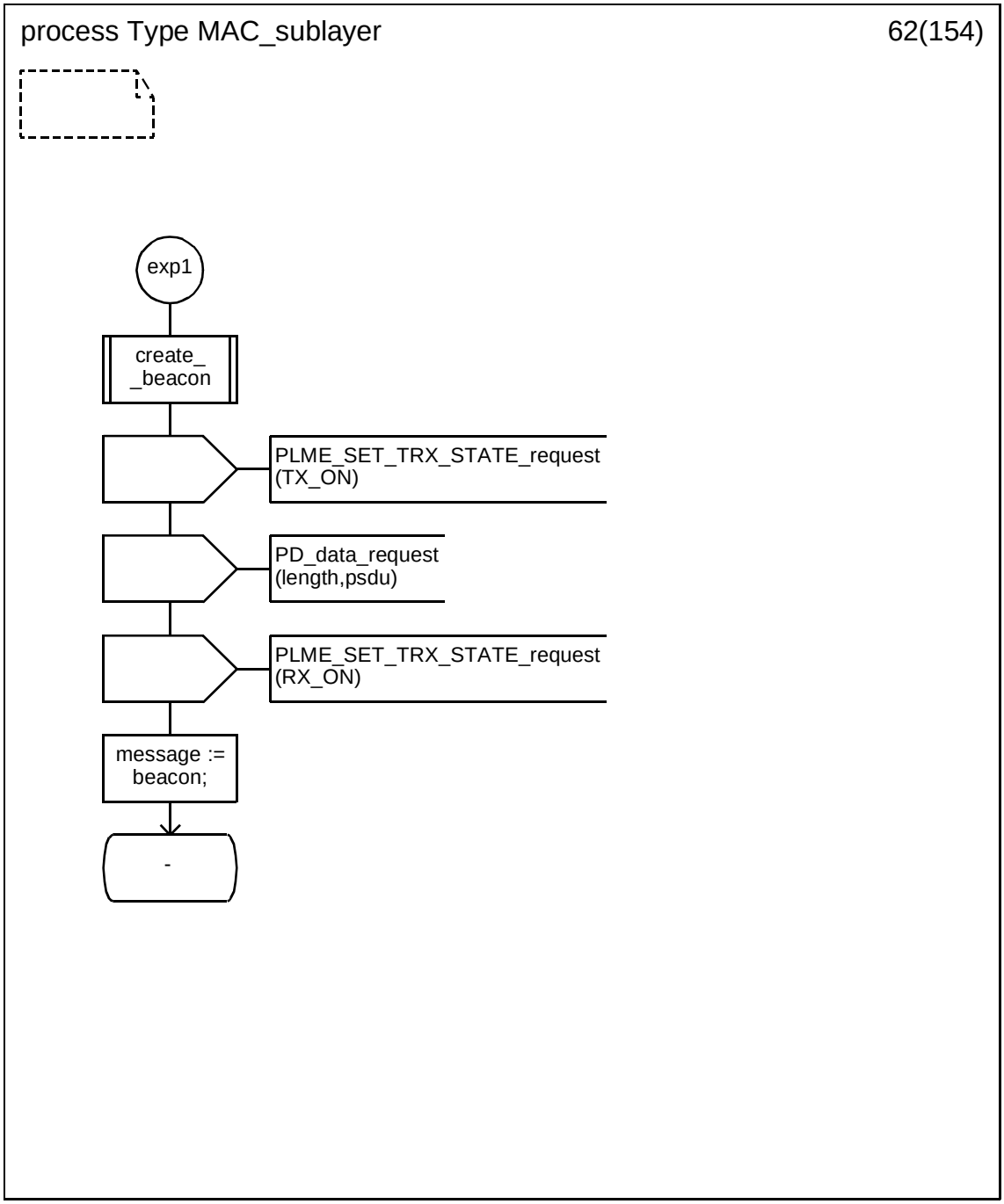



Copyright © 2003 IEEE. All rights reserved.
Authorized licensed use limited to: IEEE - Staff. Downloaded on October 28,2024 at 20:20:02 UTC from IEEE Xplore. Restrictions apply.

INTEL-1011
U.S. Patent 8,219,129

### D.3.1.63 Process type MAC_sublayer (63)

.

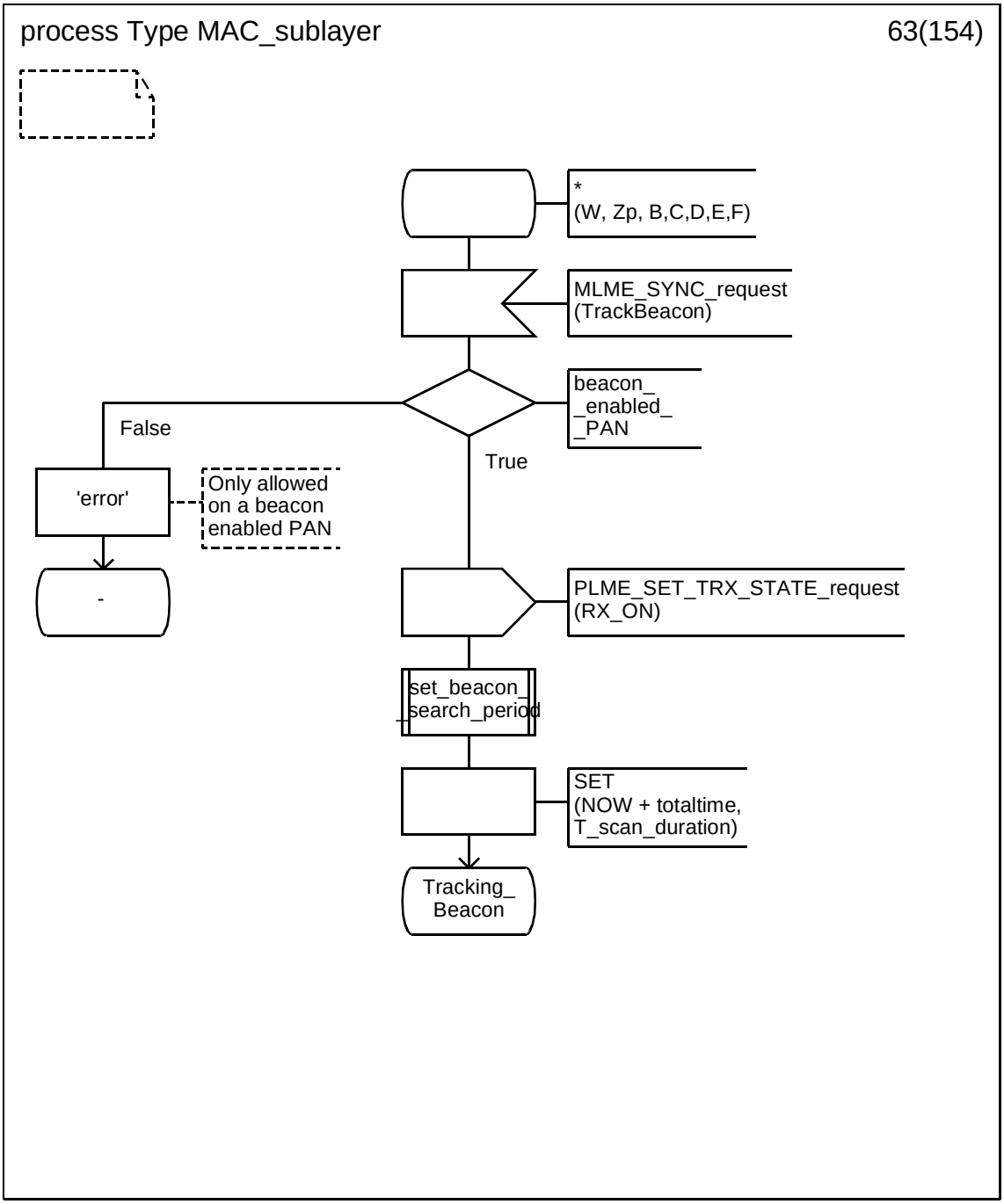


Copyright © 2003 IEEE. All rights reserved.

Authorized licensed use limited to: IEEE - Staff. Downloaded on October 28,2024 at 20:20:02 UTC from IEEE Xplore. Restrictions apply.

INTEL-1011
U.S. Patent 8,219,129

### D.3.1.64 Process type MAC_sublayer (64)

.

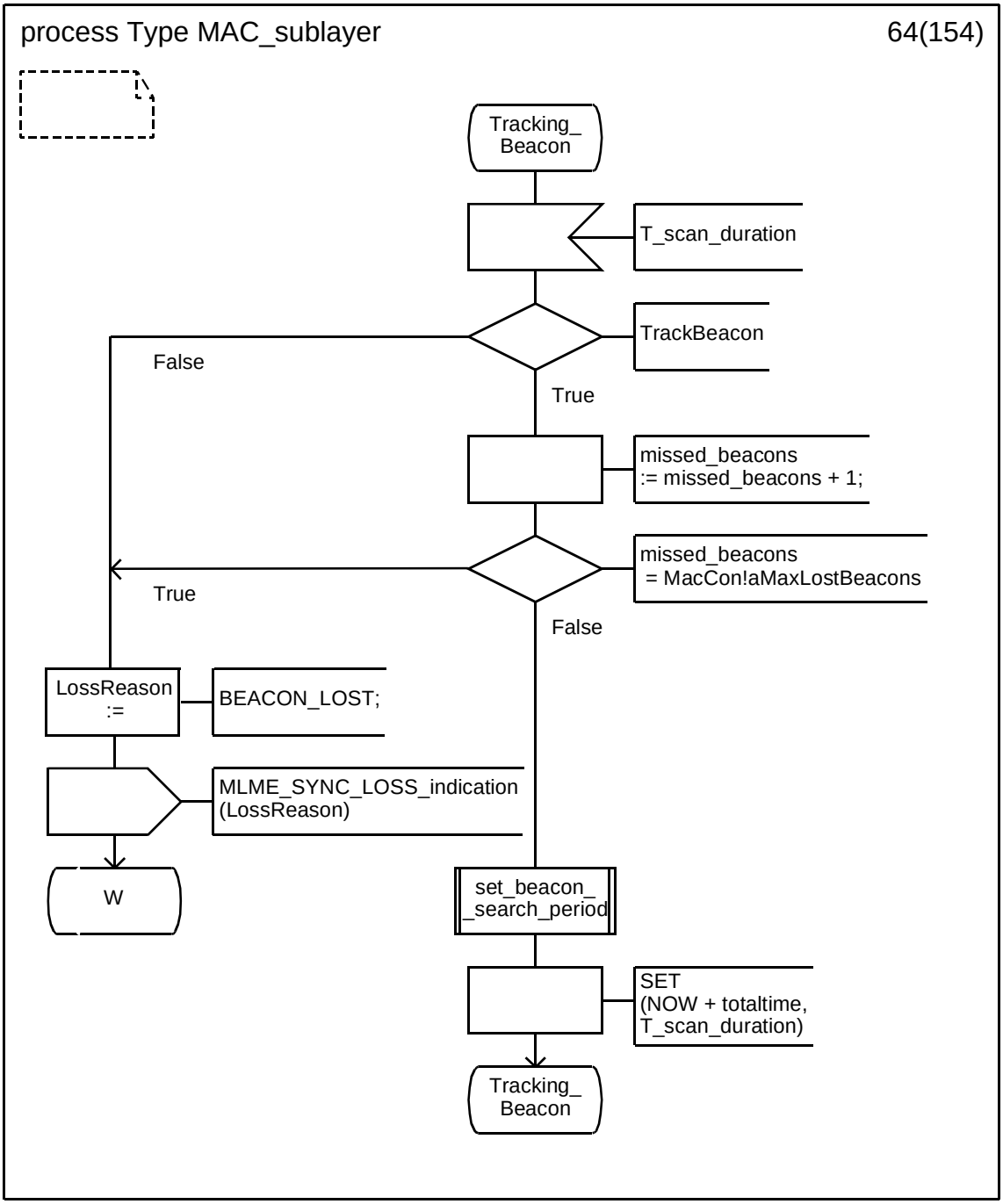



Copyright © 2003 IEEE. All rights reserved.
Authorized licensed use limited to: IEEE - Staff. Downloaded on October 28,2024 at 20:20:02 UTC from IEEE Xplore. Restrictions apply.

INTEL-1011
U.S. Patent 8,219,129

### D.3.1.65 Process type MAC_sublayer (65)

.

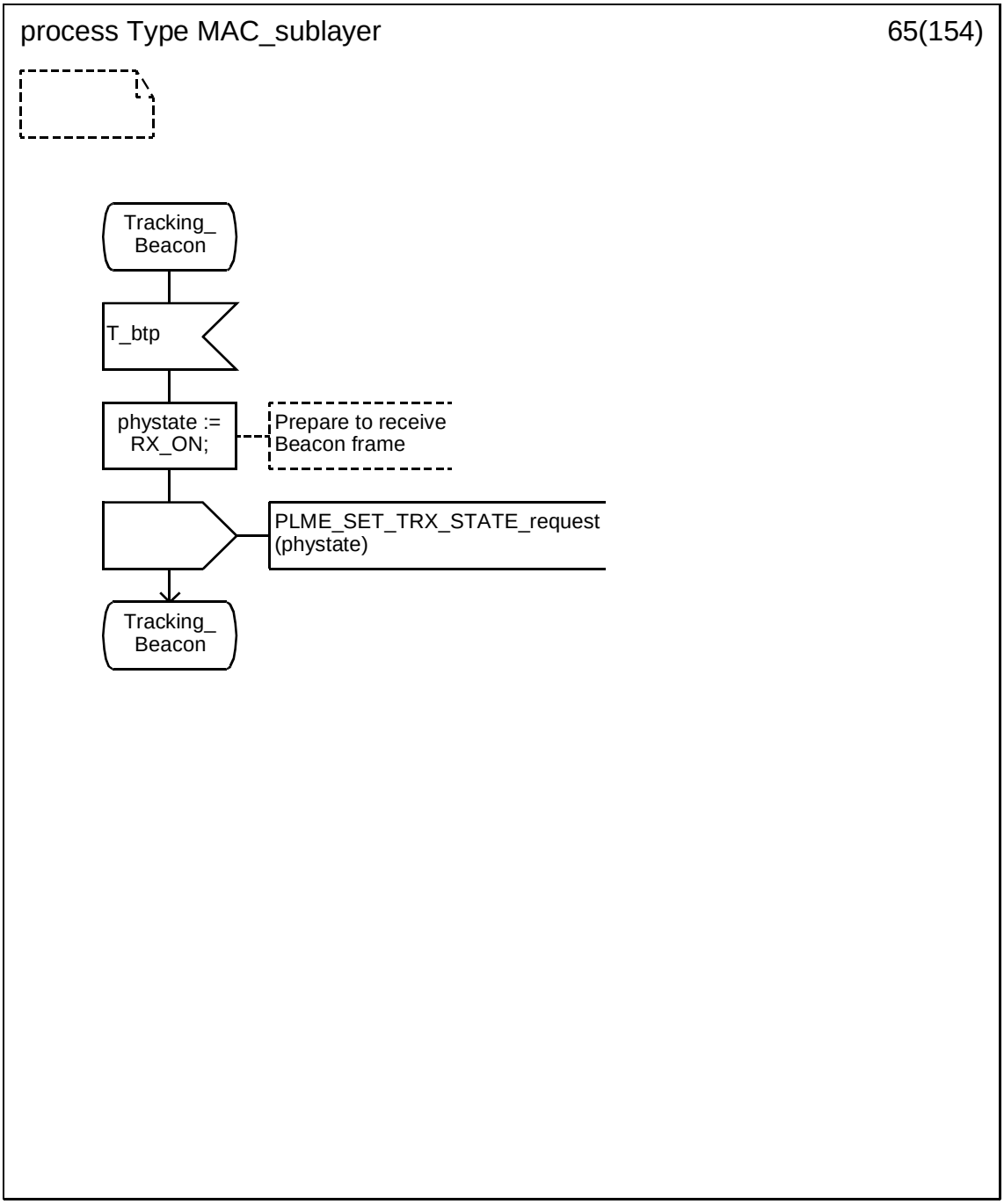


Copyright © 2003 IEEE. All rights reserved.

Authorized licensed use limited to: IEEE - Staff. Downloaded on October 28,2024 at 20:20:02 UTC from IEEE Xplore. Restrictions apply.

INTEL-1011
U.S. Patent 8,219,129

### D.3.1.66 Process type MAC_sublayer (66)

.

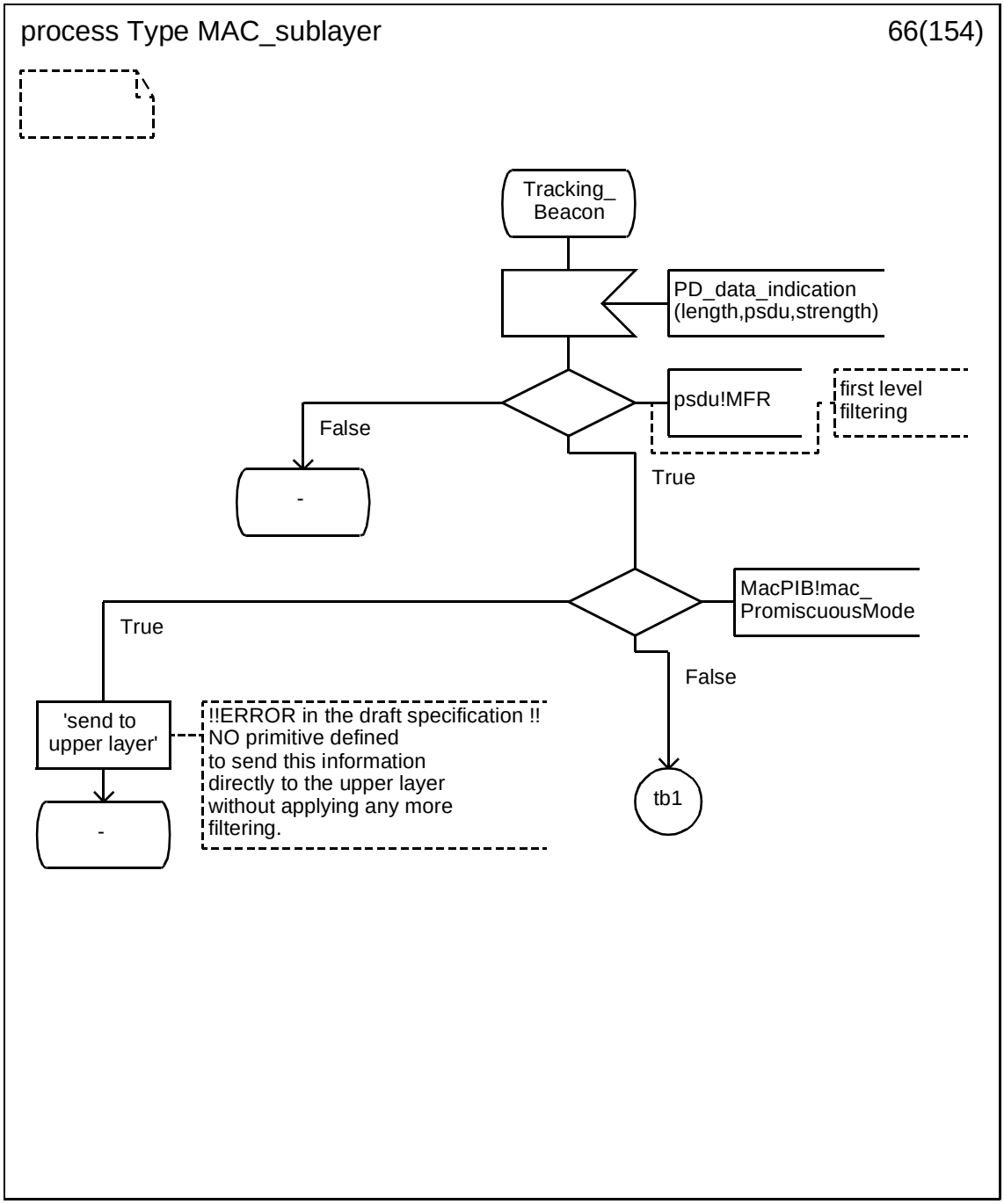



Copyright © 2003 IEEE. All rights reserved.
Authorized licensed use limited to: IEEE - Staff. Downloaded on October 28,2024 at 20:20:02 UTC from IEEE Xplore. Restrictions apply.

INTEL-1011
U.S. Patent 8,219,129

### D.3.1.67 Process type MAC_sublayer (67)

.

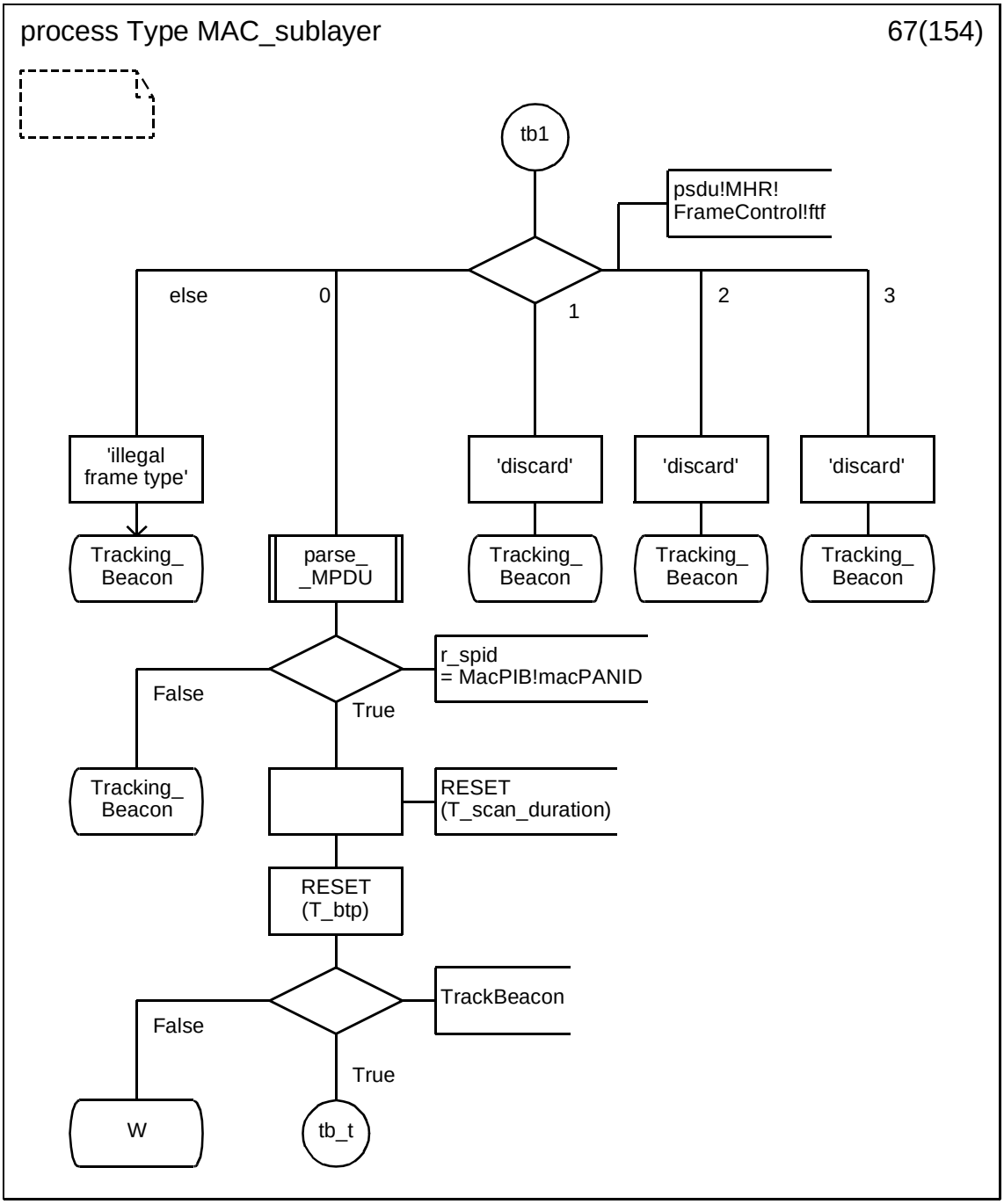


Copyright © 2003 IEEE. All rights reserved.

Authorized licensed use limited to: IEEE - Staff. Downloaded on October 28,2024 at 20:20:02 UTC from IEEE Xplore. Restrictions apply.

INTEL-1011
U.S. Patent 8,219,129

### D.3.1.68 Process type MAC_sublayer (68)

.

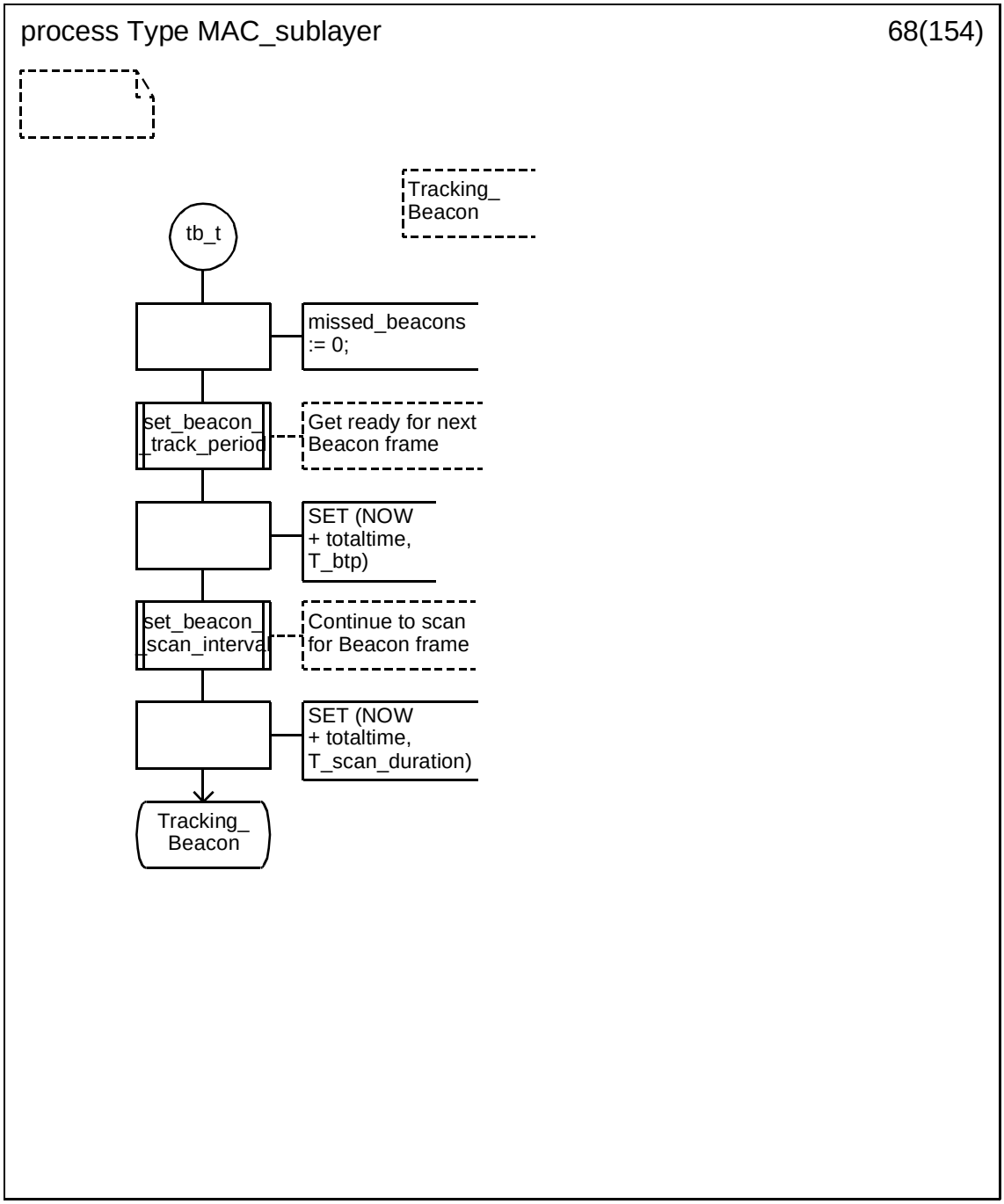



Copyright © 2003 IEEE. All rights reserved.
Authorized licensed use limited to: IEEE - Staff. Downloaded on October 28,2024 at 20:20:02 UTC from IEEE Xplore. Restrictions apply.

INTEL-1011
U.S. Patent 8,219,129

### D.3.1.69 Process type MAC_sublayer (69)

.

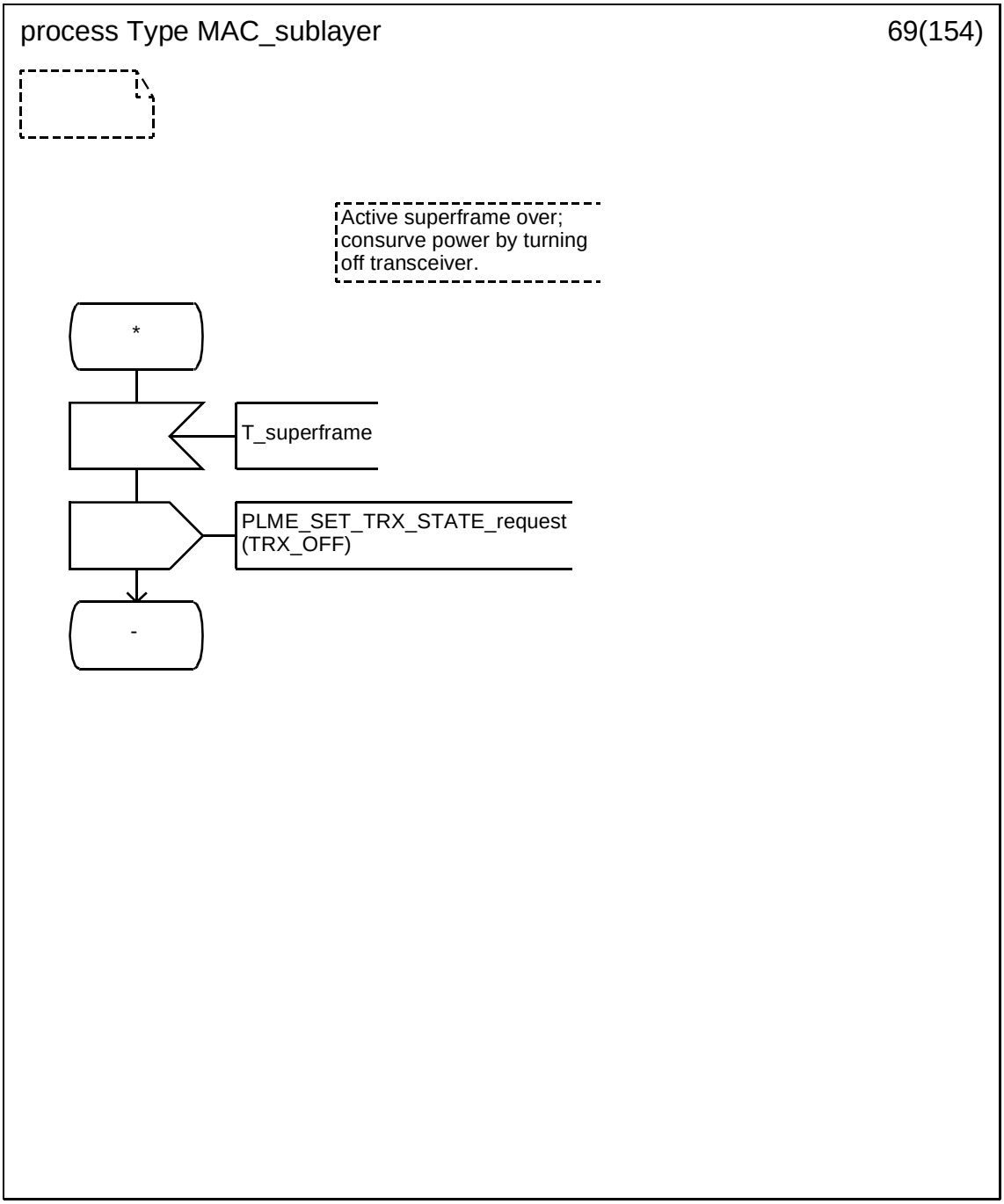


Copyright © 2003 IEEE. All rights reserved.

Authorized licensed use limited to: IEEE - Staff. Downloaded on October 28,2024 at 20:20:02 UTC from IEEE Xplore. Restrictions apply.

INTEL-1011
U.S. Patent 8,219,129

### D.3.1.70 Process type MAC_sublayer (70)

.

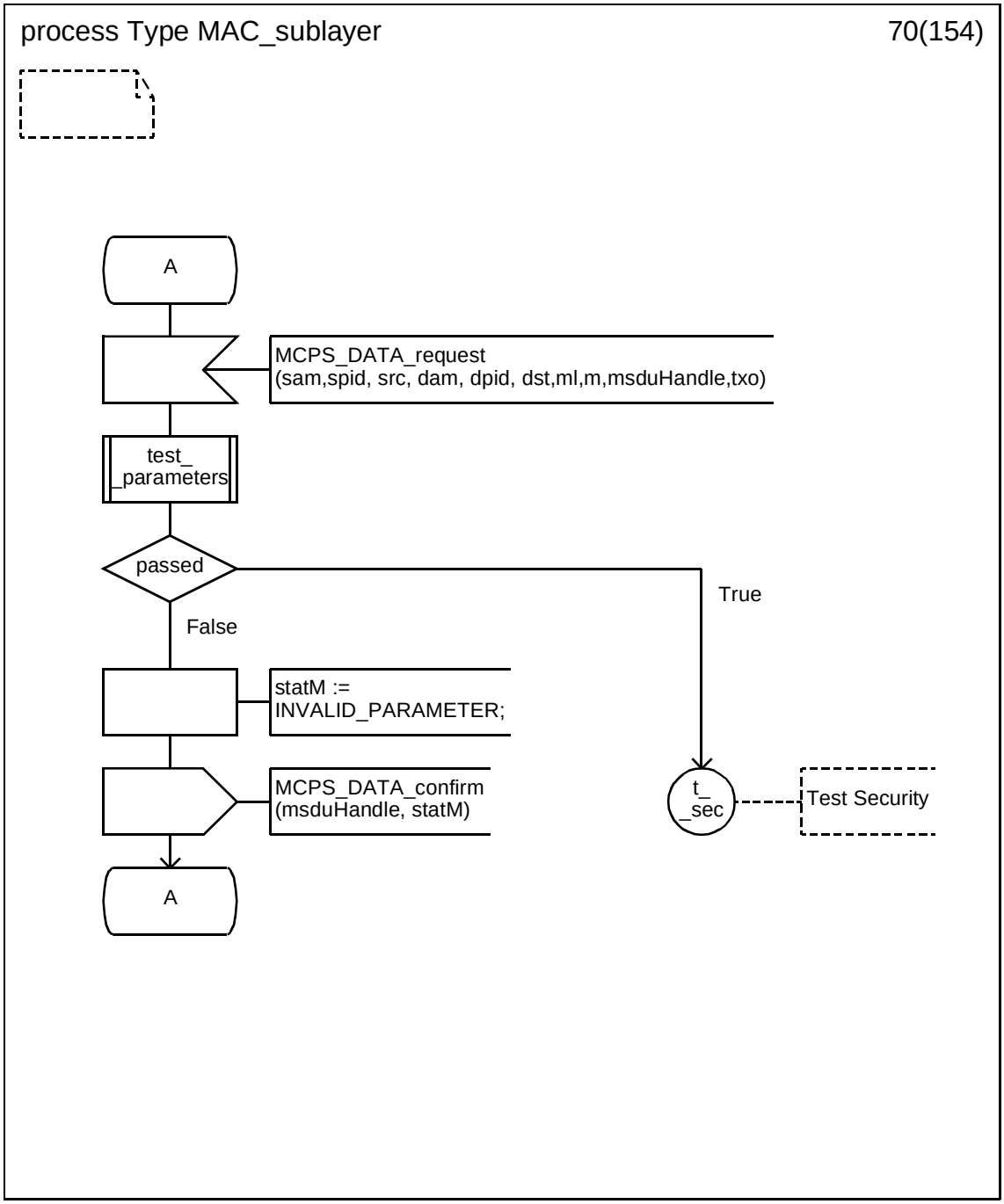



Copyright © 2003 IEEE. All rights reserved.
Authorized licensed use limited to: IEEE - Staff. Downloaded on October 28,2024 at 20:20:02 UTC from IEEE Xplore. Restrictions apply.

INTEL-1011
U.S. Patent 8,219,129

### D.3.1.71 Process type MAC_sublayer (71)

.

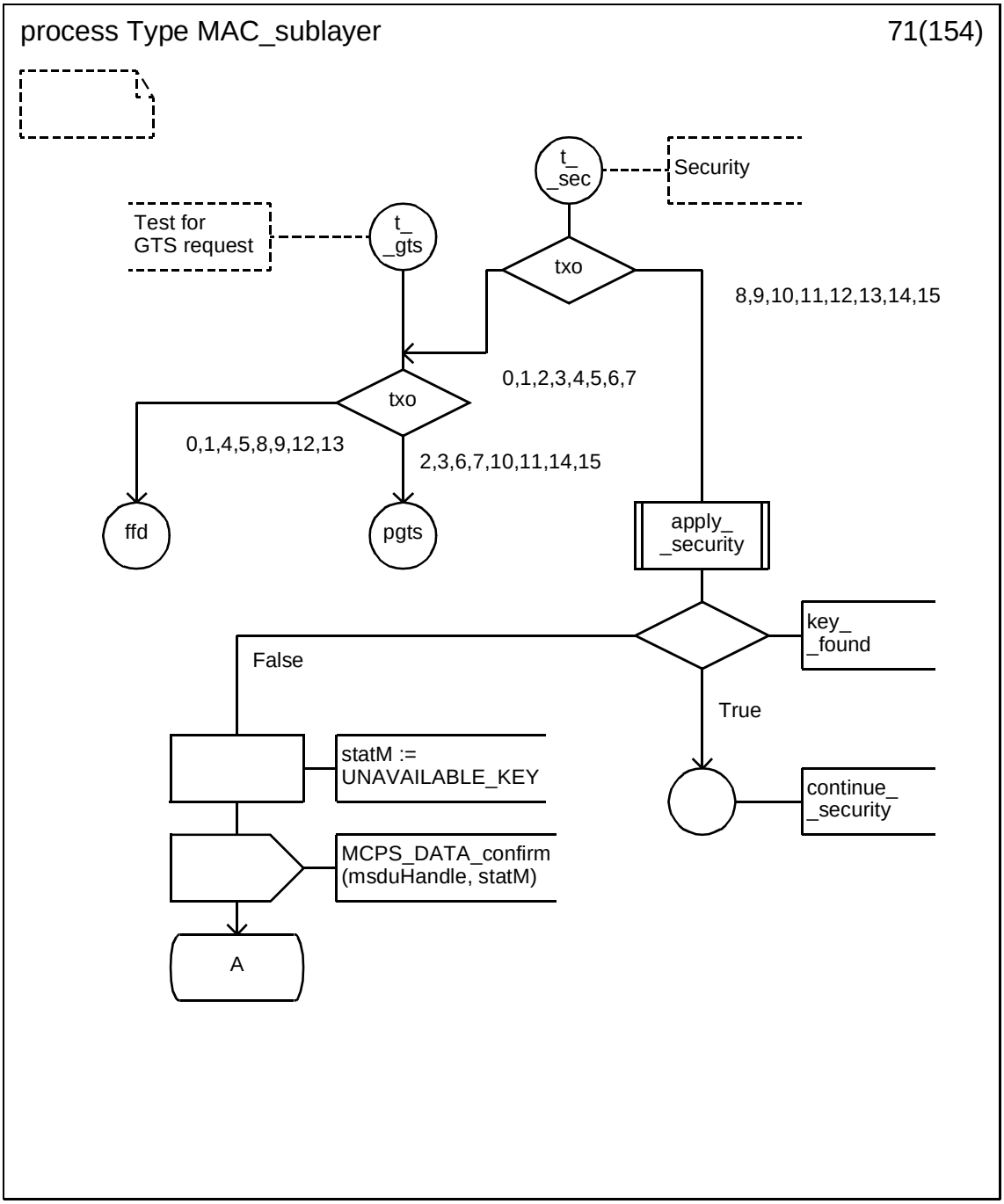


Copyright © 2003 IEEE. All rights reserved.

Authorized licensed use limited to: IEEE - Staff. Downloaded on October 28,2024 at 20:20:02 UTC from IEEE Xplore. Restrictions apply.

INTEL-1011
U.S. Patent 8,219,129

### D.3.1.72 Process type MAC_sublayer (72)

.

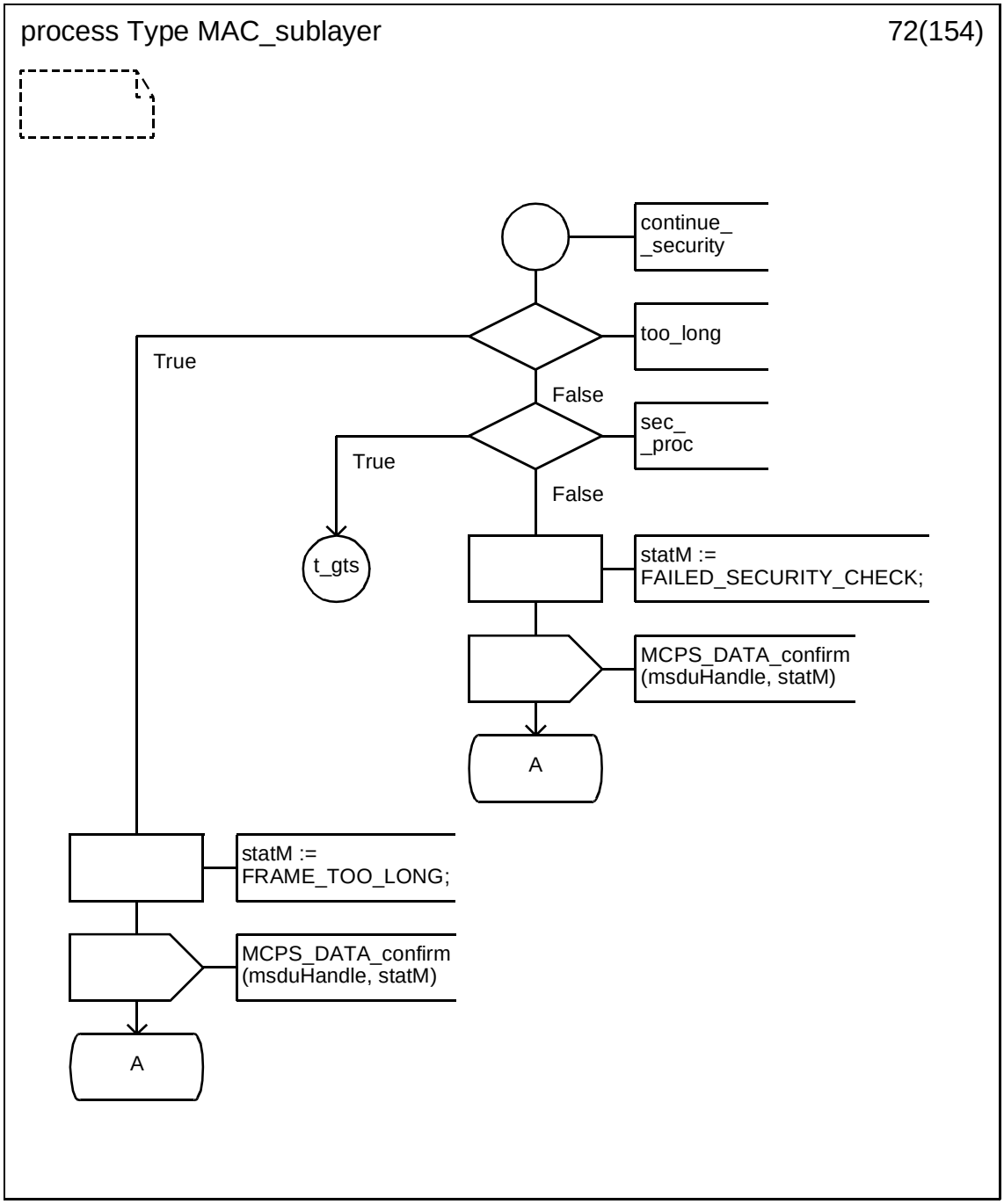



Copyright © 2003 IEEE. All rights reserved.
Authorized licensed use limited to: IEEE - Staff. Downloaded on October 28,2024 at 20:20:02 UTC from IEEE Xplore. Restrictions apply.

INTEL-1011
U.S. Patent 8,219,129

### D.3.1.73 Process type MAC_sublayer (73)

.

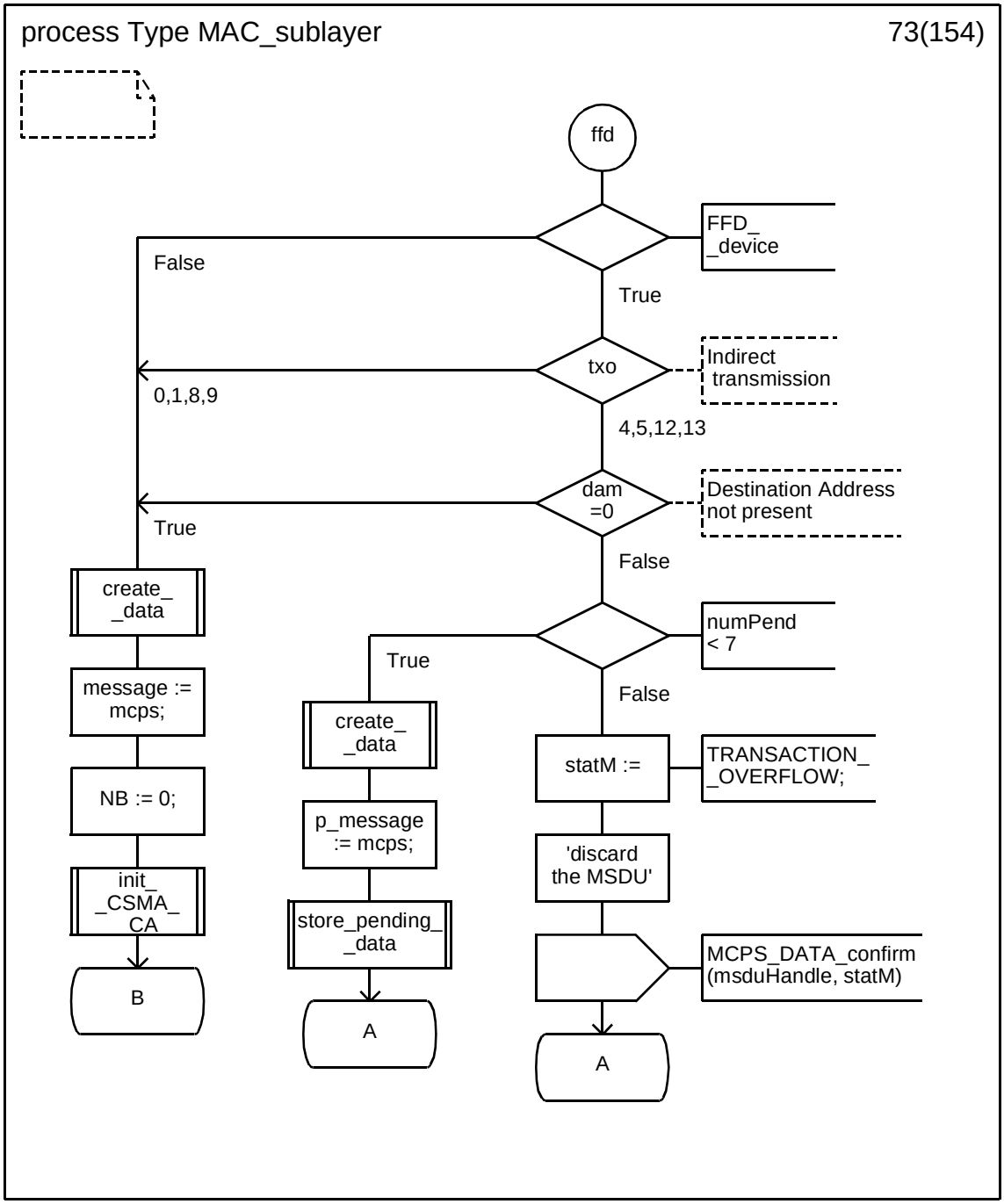


Copyright © 2003 IEEE. All rights reserved.

Authorized licensed use limited to: IEEE - Staff. Downloaded on October 28,2024 at 20:20:02 UTC from IEEE Xplore. Restrictions apply.

INTEL-1011
U.S. Patent 8,219,129

### D.3.1.74 Process type MAC_sublayer (74)

.

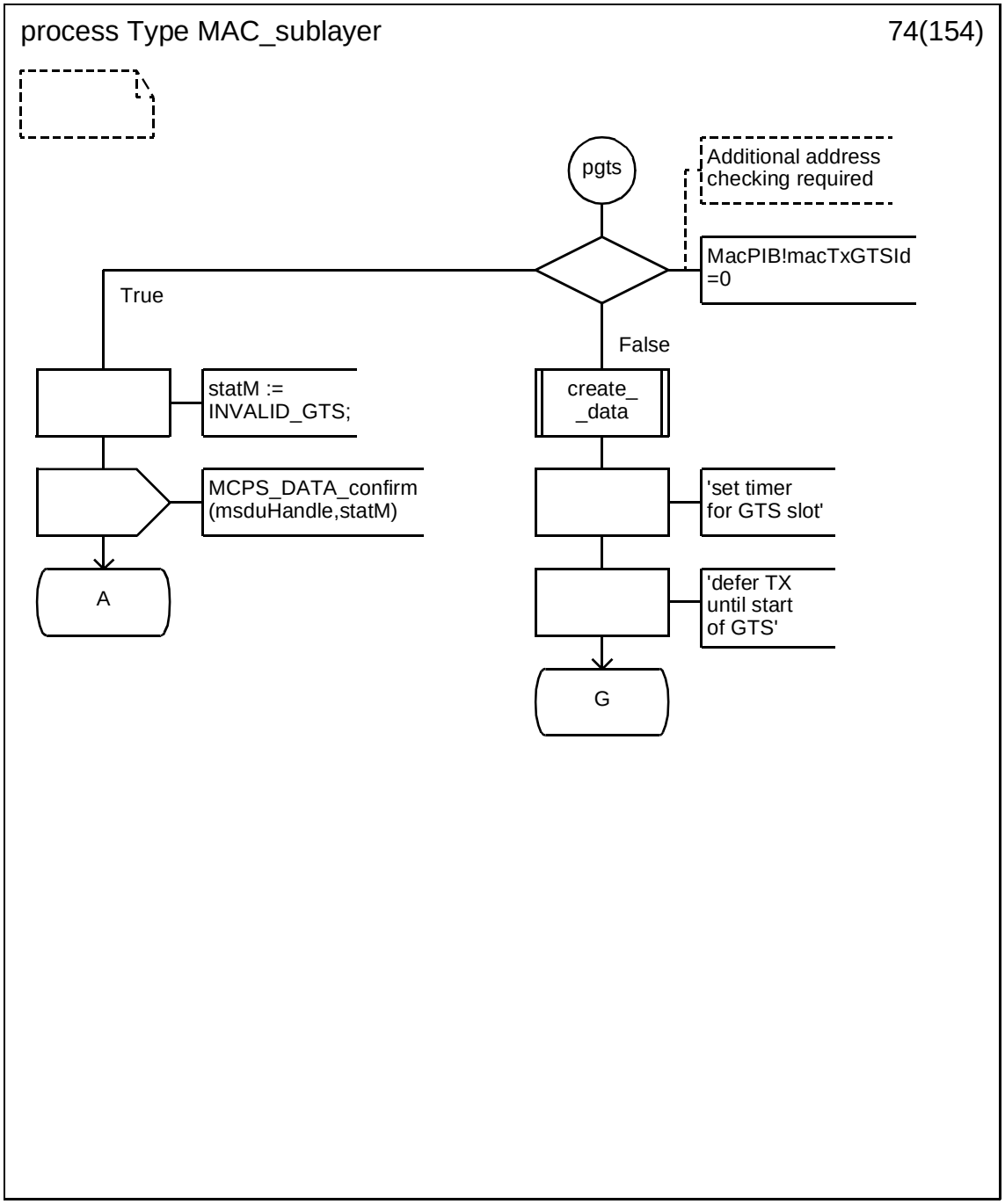



Copyright © 2003 IEEE. All rights reserved.
Authorized licensed use limited to: IEEE - Staff. Downloaded on October 28,2024 at 20:20:02 UTC from IEEE Xplore. Restrictions apply.

INTEL-1011
U.S. Patent 8,219,129

### D.3.1.75 Process type MAC_sublayer (75)

.

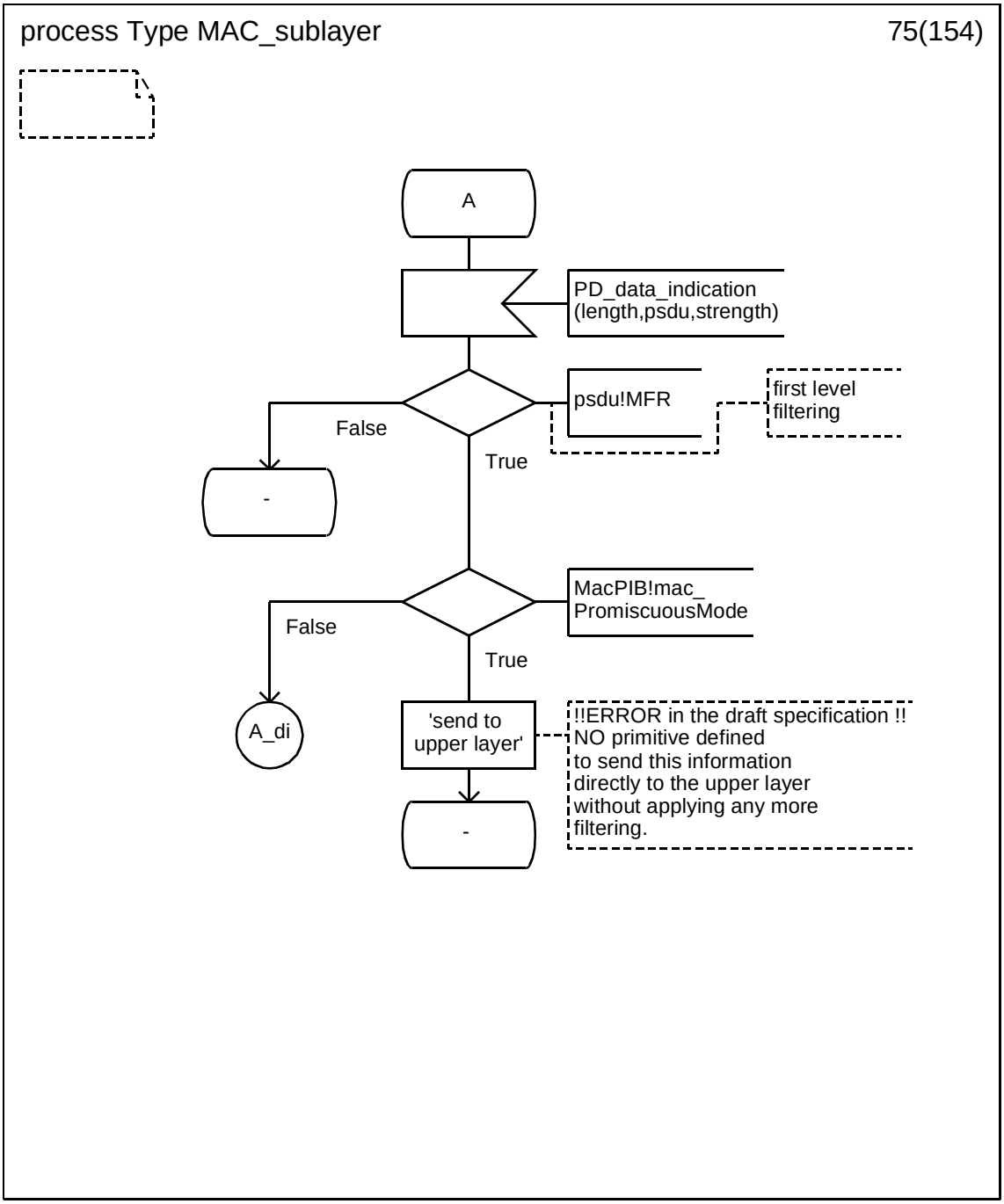


Copyright © 2003 IEEE. All rights reserved.

Authorized licensed use limited to: IEEE - Staff. Downloaded on October 28,2024 at 20:20:02 UTC from IEEE Xplore. Restrictions apply.

INTEL-1011
U.S. Patent 8,219,129

### D.3.1.76 Process type MAC_sublayer (76)

.

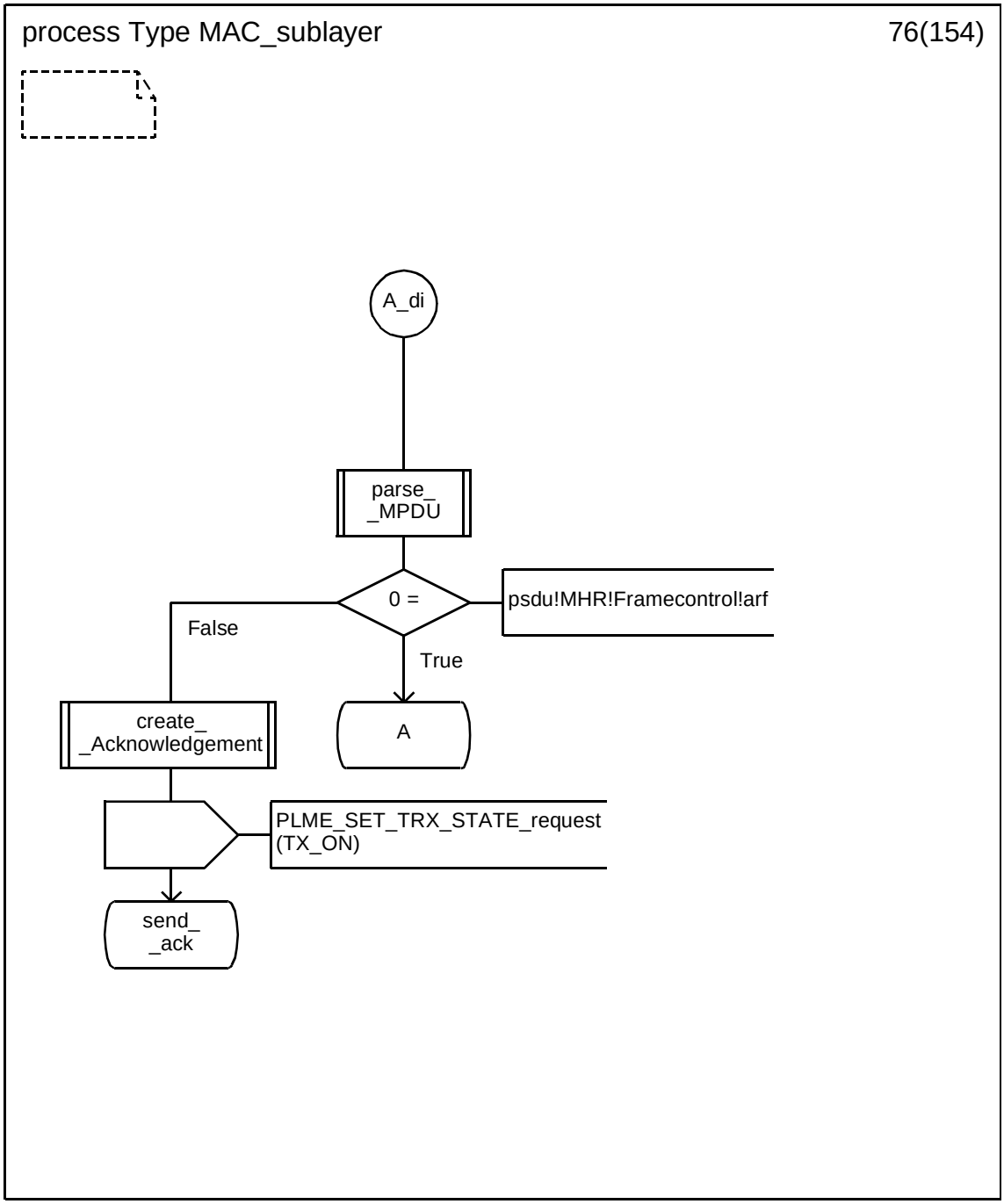



Copyright © 2003 IEEE. All rights reserved.
Authorized licensed use limited to: IEEE - Staff. Downloaded on October 28,2024 at 20:20:02 UTC from IEEE Xplore. Restrictions apply.

INTEL-1011
U.S. Patent 8,219,129

### D.3.1.77 Process type MAC_sublayer (77)

.

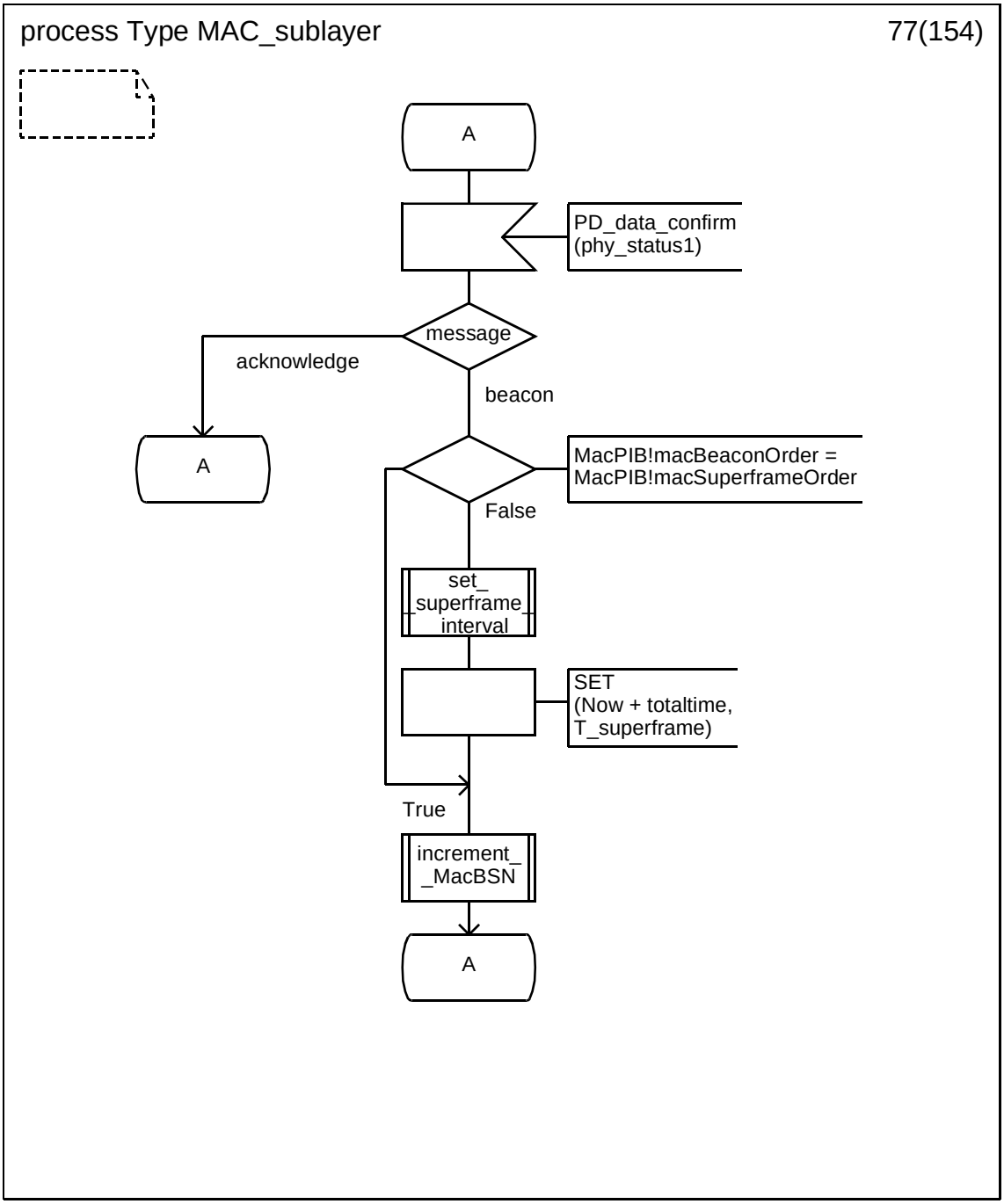


Copyright © 2003 IEEE. All rights reserved.

Authorized licensed use limited to: IEEE - Staff. Downloaded on October 28,2024 at 20:20:02 UTC from IEEE Xplore. Restrictions apply.

INTEL-1011
U.S. Patent 8,219,129

### D.3.1.78 Process type MAC_sublayer (78)

.

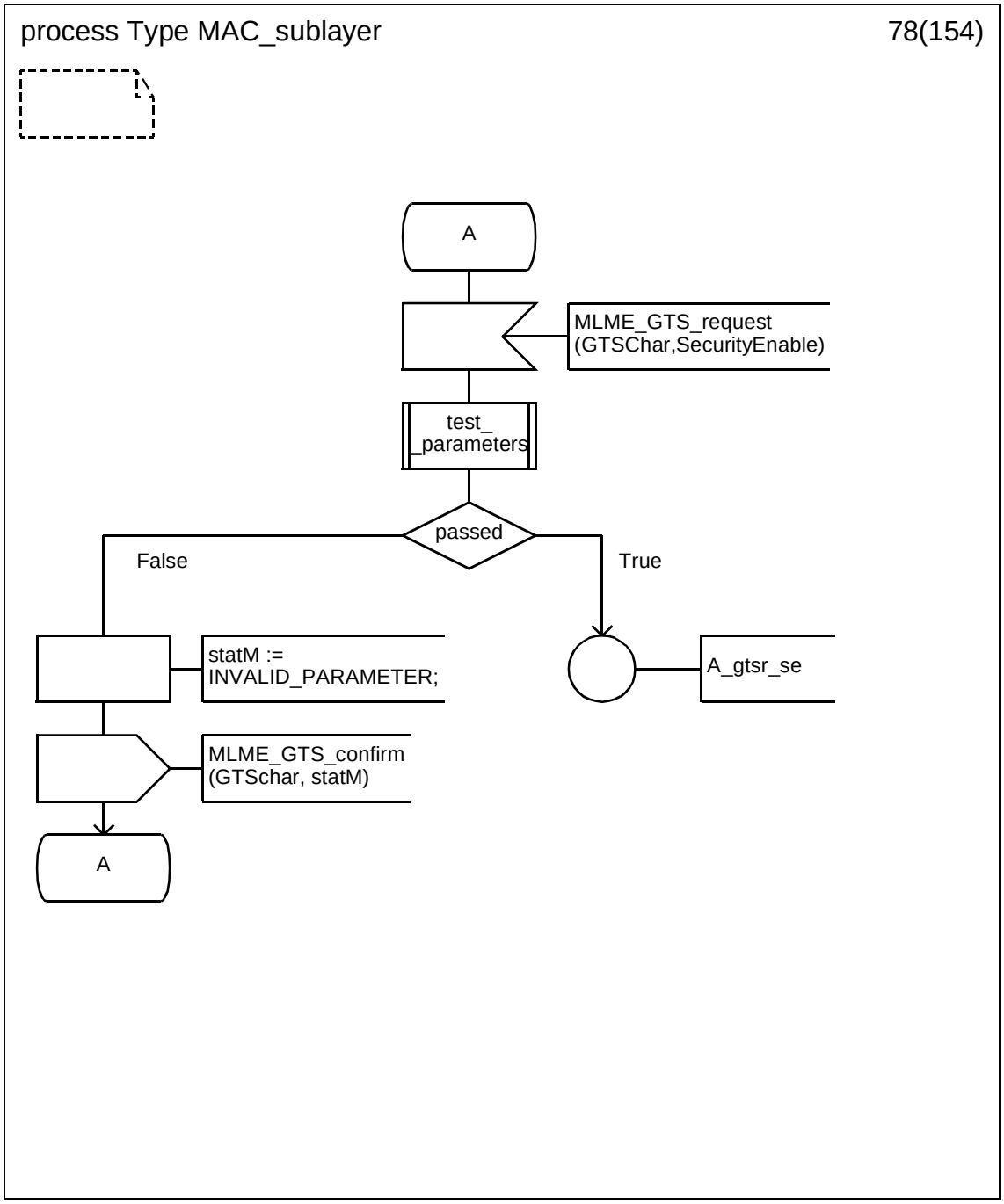



Copyright © 2003 IEEE. All rights reserved.
Authorized licensed use limited to: IEEE - Staff. Downloaded on October 28,2024 at 20:20:02 UTC from IEEE Xplore. Restrictions apply.

INTEL-1011
U.S. Patent 8,219,129

### D.3.1.79 Process type MAC_sublayer (79)

.

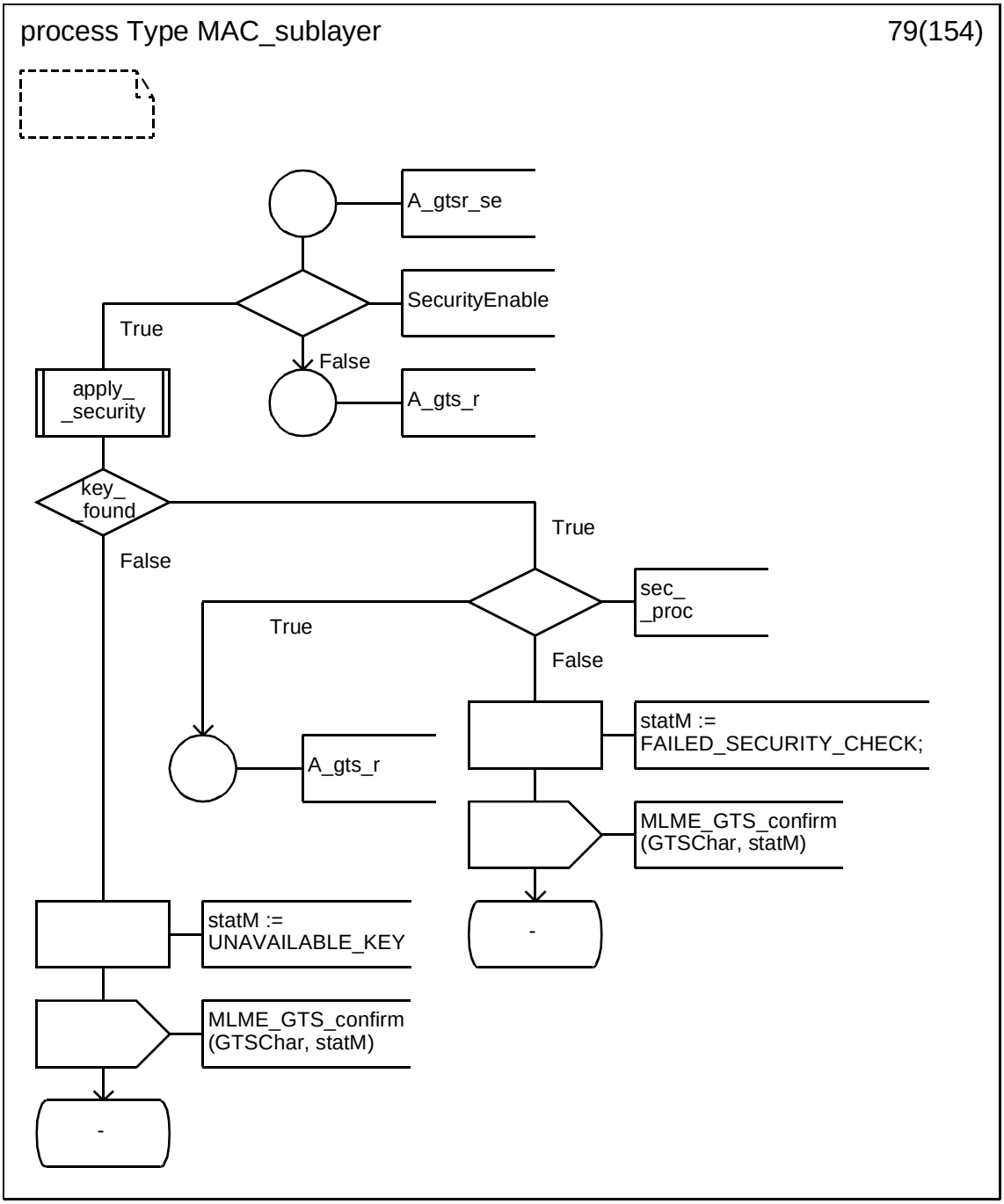


Copyright © 2003 IEEE. All rights reserved.

Authorized licensed use limited to: IEEE - Staff. Downloaded on October 28,2024 at 20:20:02 UTC from IEEE Xplore. Restrictions apply.

INTEL-1011
U.S. Patent 8,219,129

### D.3.1.80 Process type MAC_sublayer (80)

.

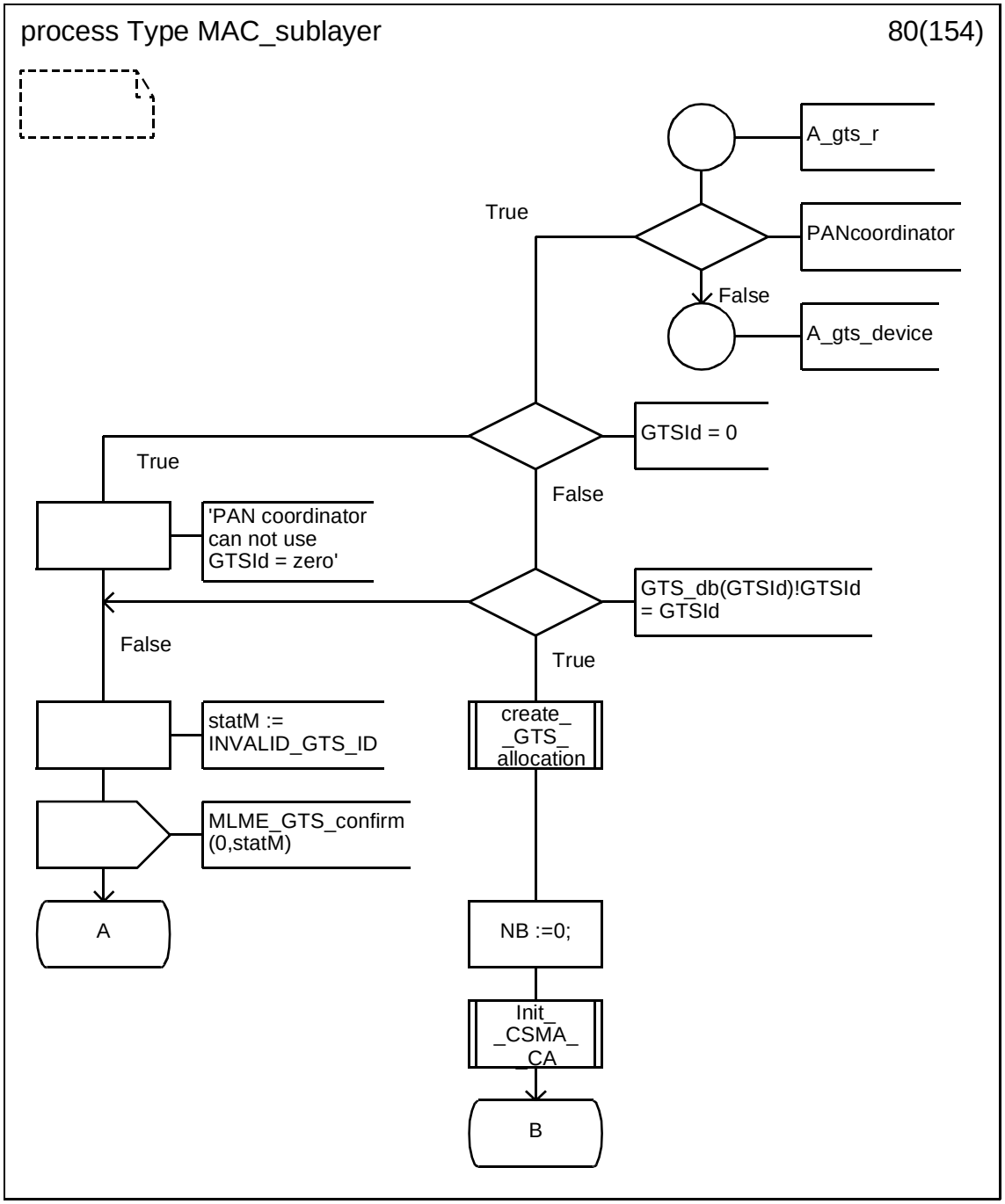



Copyright © 2003 IEEE. All rights reserved.
Authorized licensed use limited to: IEEE - Staff. Downloaded on October 28,2024 at 20:20:02 UTC from IEEE Xplore. Restrictions apply.

INTEL-1011
U.S. Patent 8,219,129

### D.3.1.81 Process type MAC_sublayer (81)

.

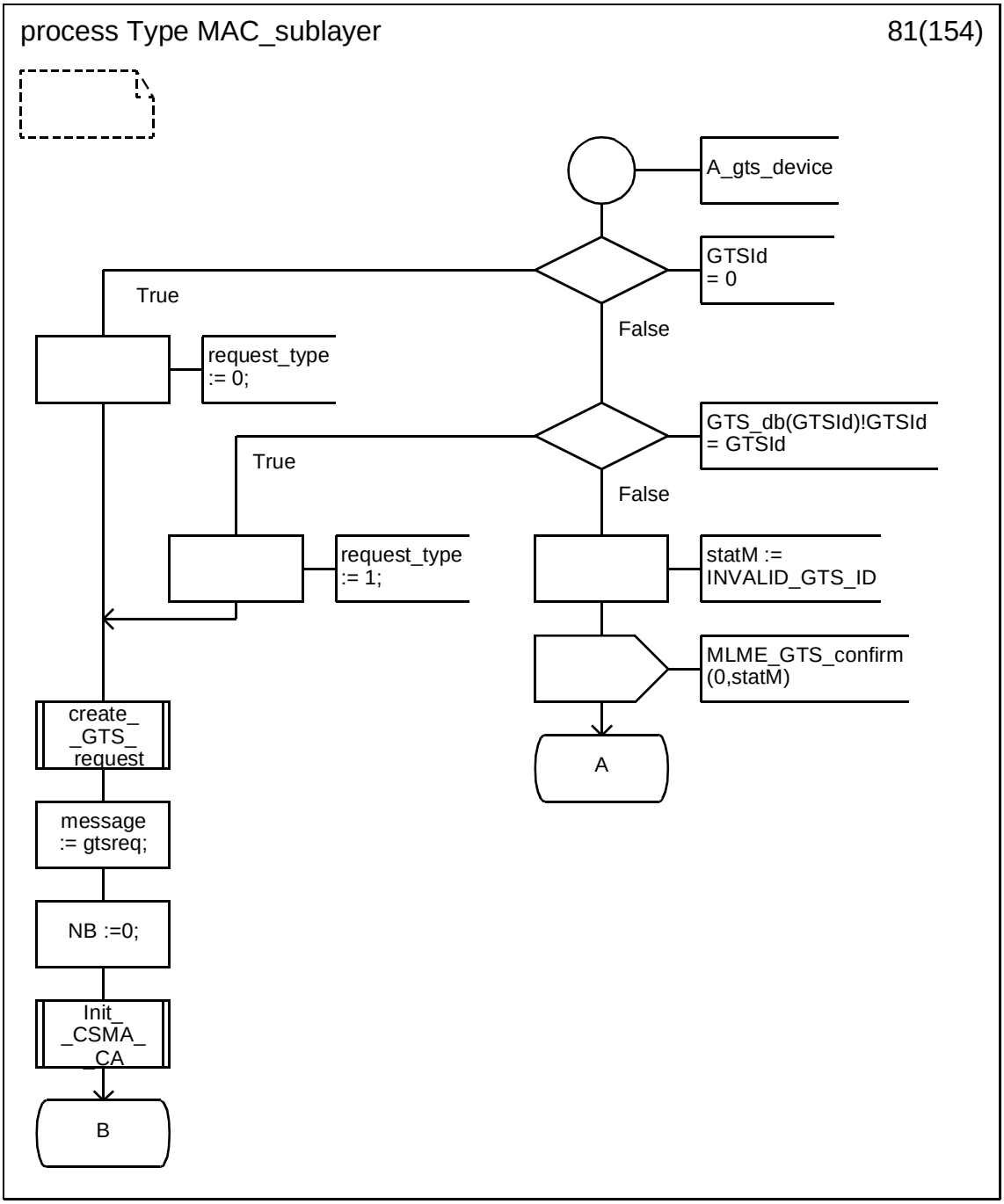


Copyright © 2003 IEEE. All rights reserved.

Authorized licensed use limited to: IEEE - Staff. Downloaded on October 28,2024 at 20:20:02 UTC from IEEE Xplore. Restrictions apply.

INTEL-1011
U.S. Patent 8,219,129

### D.3.1.82 Process type MAC_sublayer (82)

.

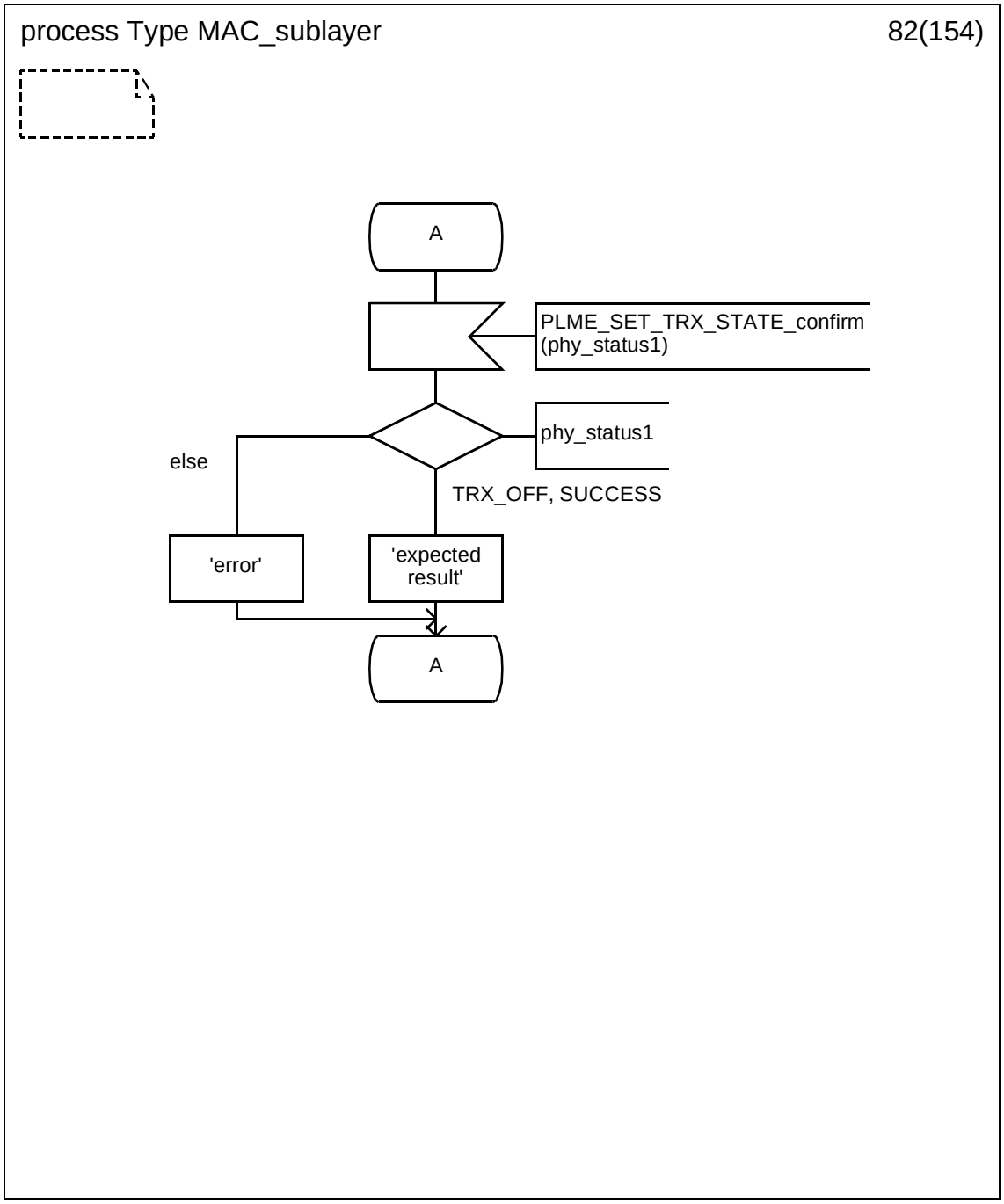



Copyright © 2003 IEEE. All rights reserved.
Authorized licensed use limited to: IEEE - Staff. Downloaded on October 28,2024 at 20:20:02 UTC from IEEE Xplore. Restrictions apply.

INTEL-1011
U.S. Patent 8,219,129

### D.3.1.83 Process type MAC_sublayer (83)

.

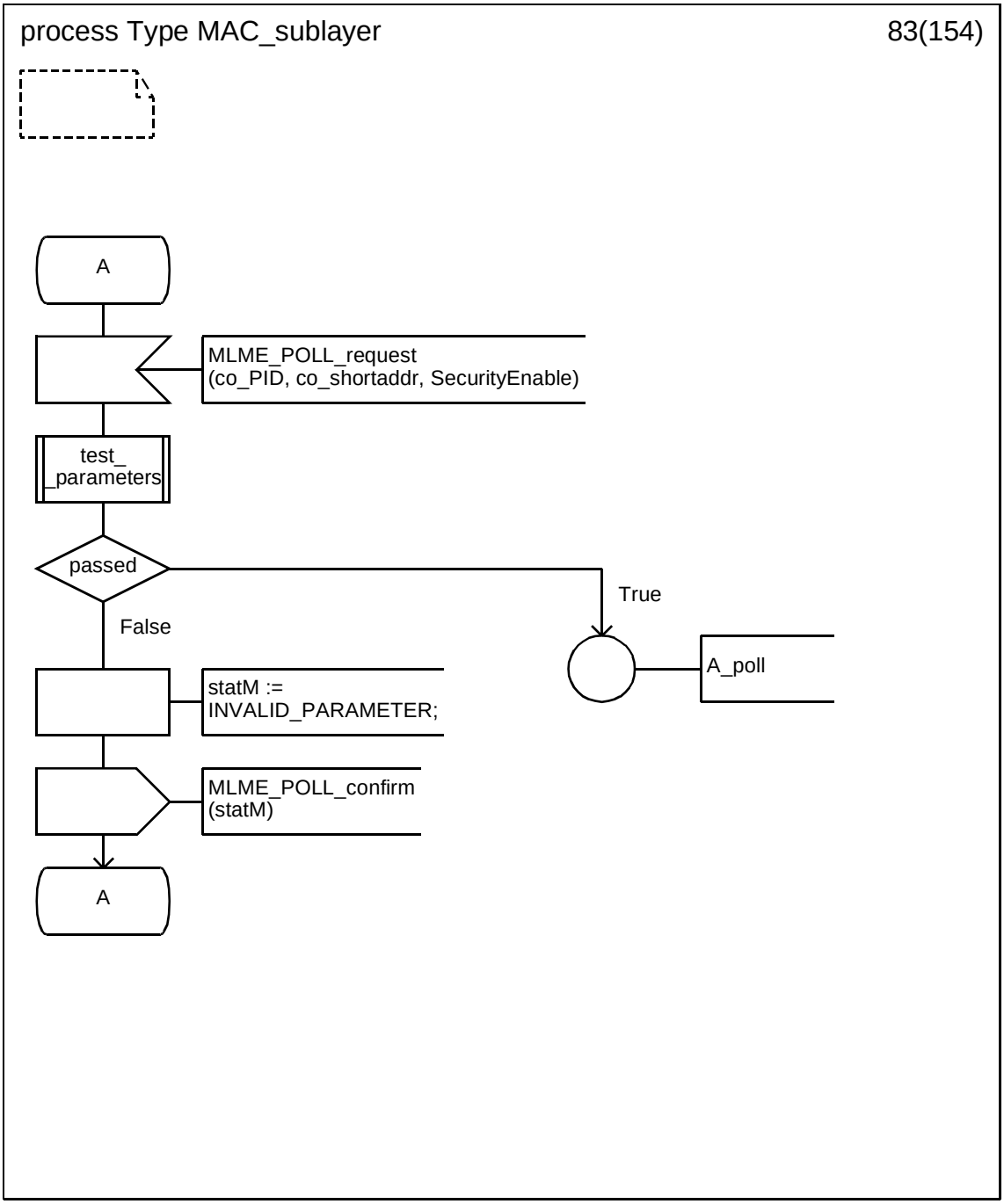


Copyright © 2003 IEEE. All rights reserved.

Authorized licensed use limited to: IEEE - Staff. Downloaded on October 28,2024 at 20:20:02 UTC from IEEE Xplore. Restrictions apply.

INTEL-1011
U.S. Patent 8,219,129

### D.3.1.84 Process type MAC_sublayer (84)

.

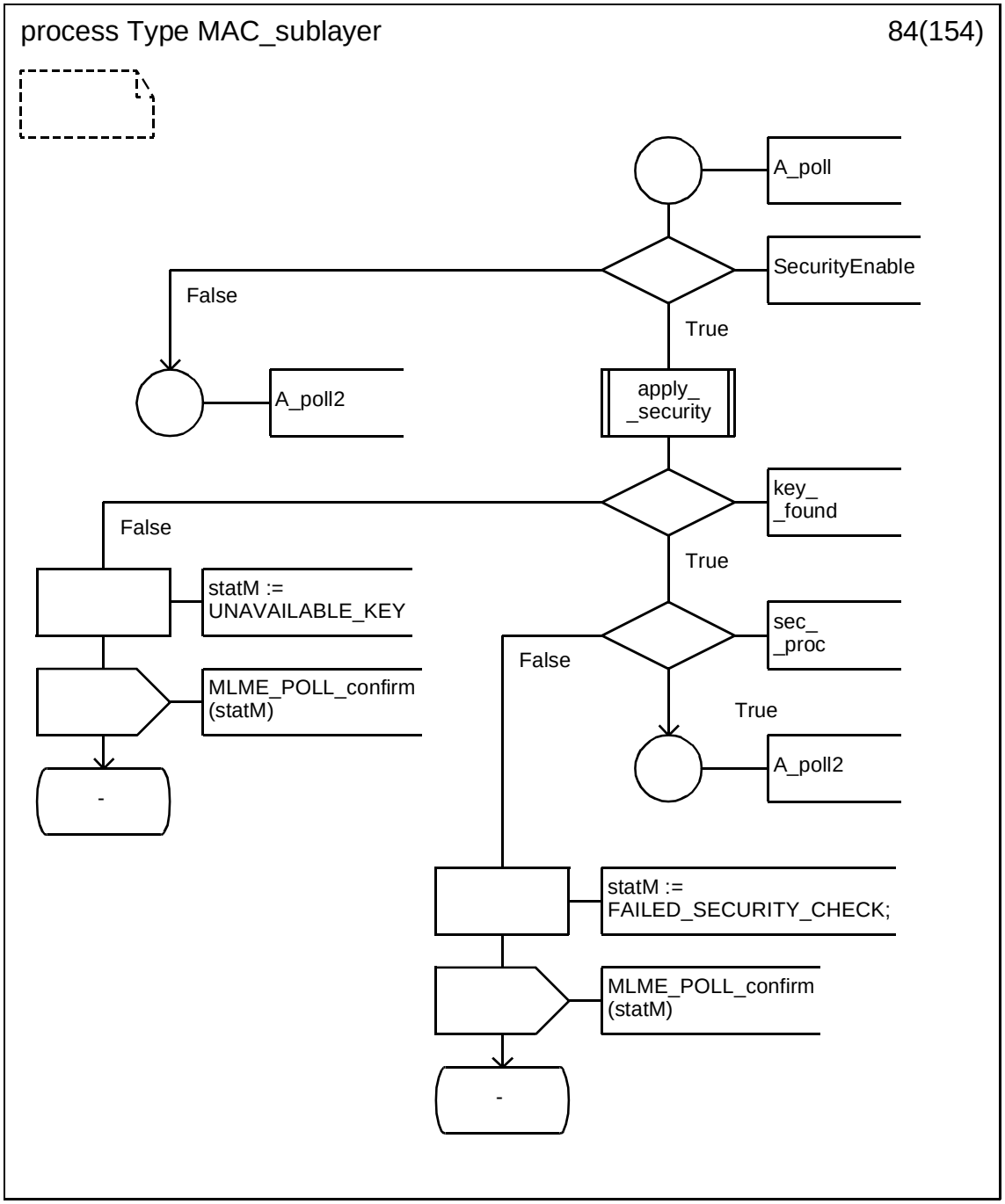



Copyright © 2003 IEEE. All rights reserved.
Authorized licensed use limited to: IEEE - Staff. Downloaded on October 28,2024 at 20:20:02 UTC from IEEE Xplore. Restrictions apply.

INTEL-1011
U.S. Patent 8,219,129

### D.3.1.85 Process type MAC_sublayer (85)

.

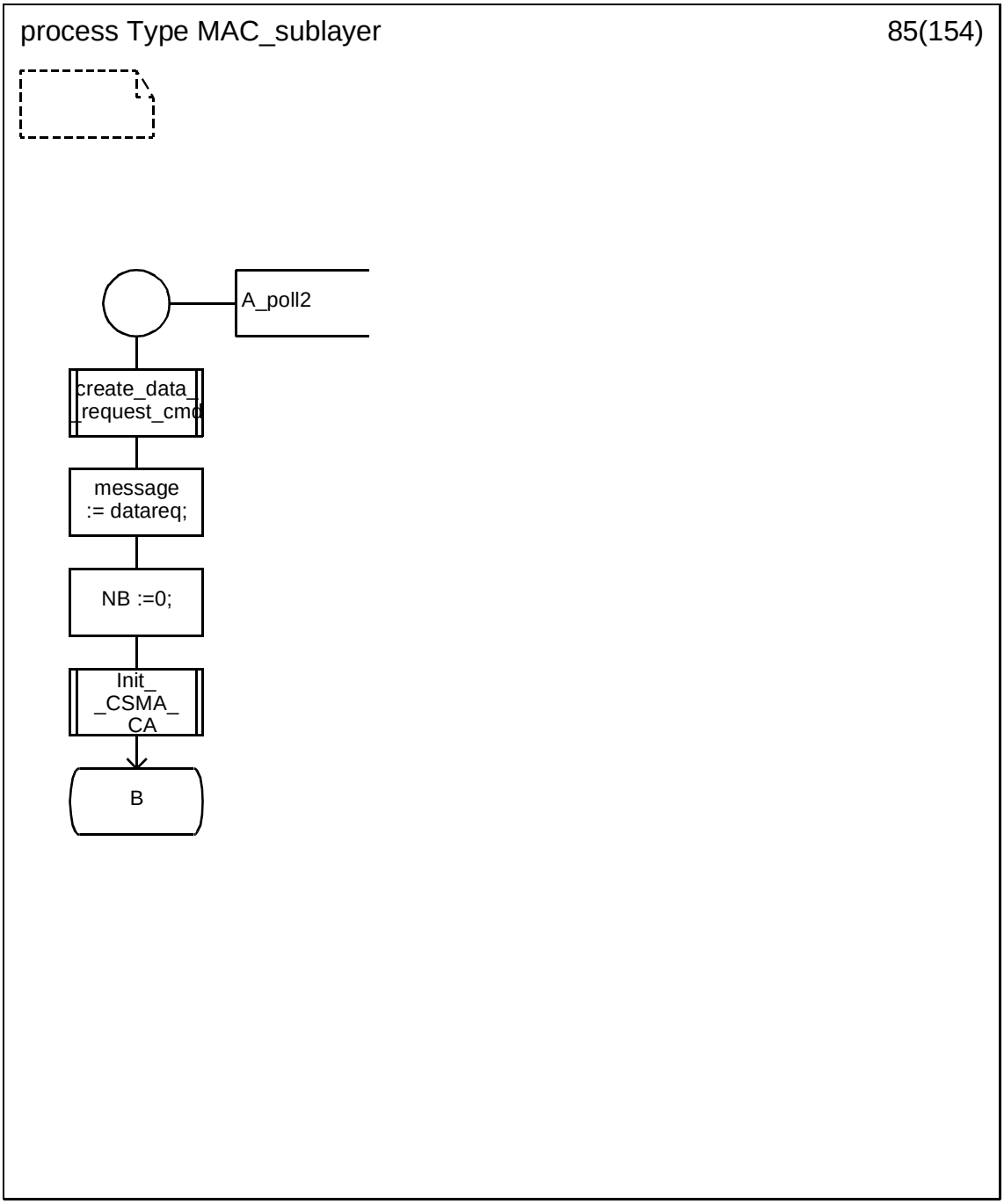


Copyright © 2003 IEEE. All rights reserved.

Authorized licensed use limited to: IEEE - Staff. Downloaded on October 28,2024 at 20:20:02 UTC from IEEE Xplore. Restrictions apply.

INTEL-1011
U.S. Patent 8,219,129

### D.3.1.86 Process type MAC_sublayer (86)

.

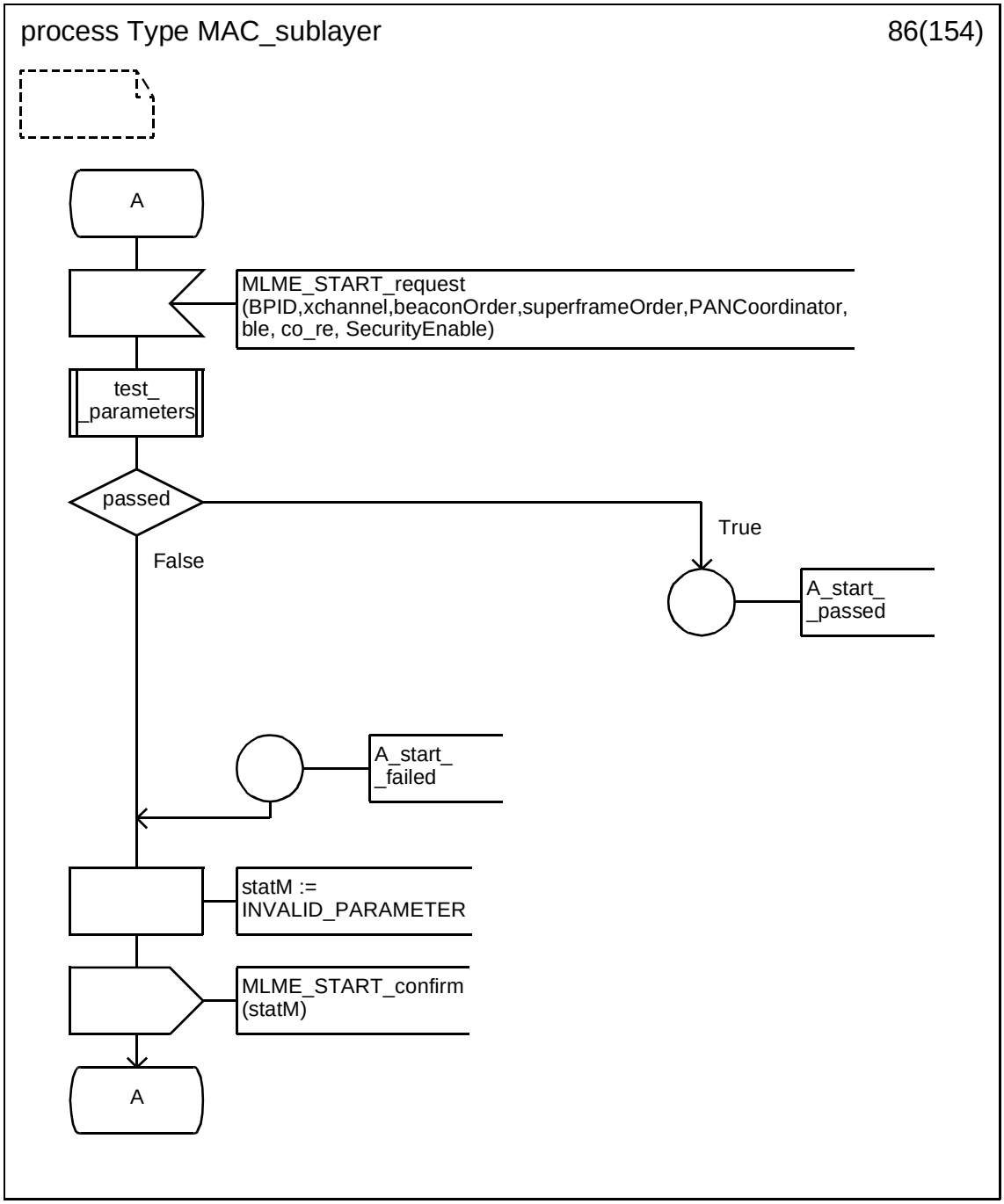



Copyright © 2003 IEEE. All rights reserved.
Authorized licensed use limited to: IEEE - Staff. Downloaded on October 28,2024 at 20:20:02 UTC from IEEE Xplore. Restrictions apply.

INTEL-1011
U.S. Patent 8,219,129

### D.3.1.87 Process type MAC_sublayer (87)

.

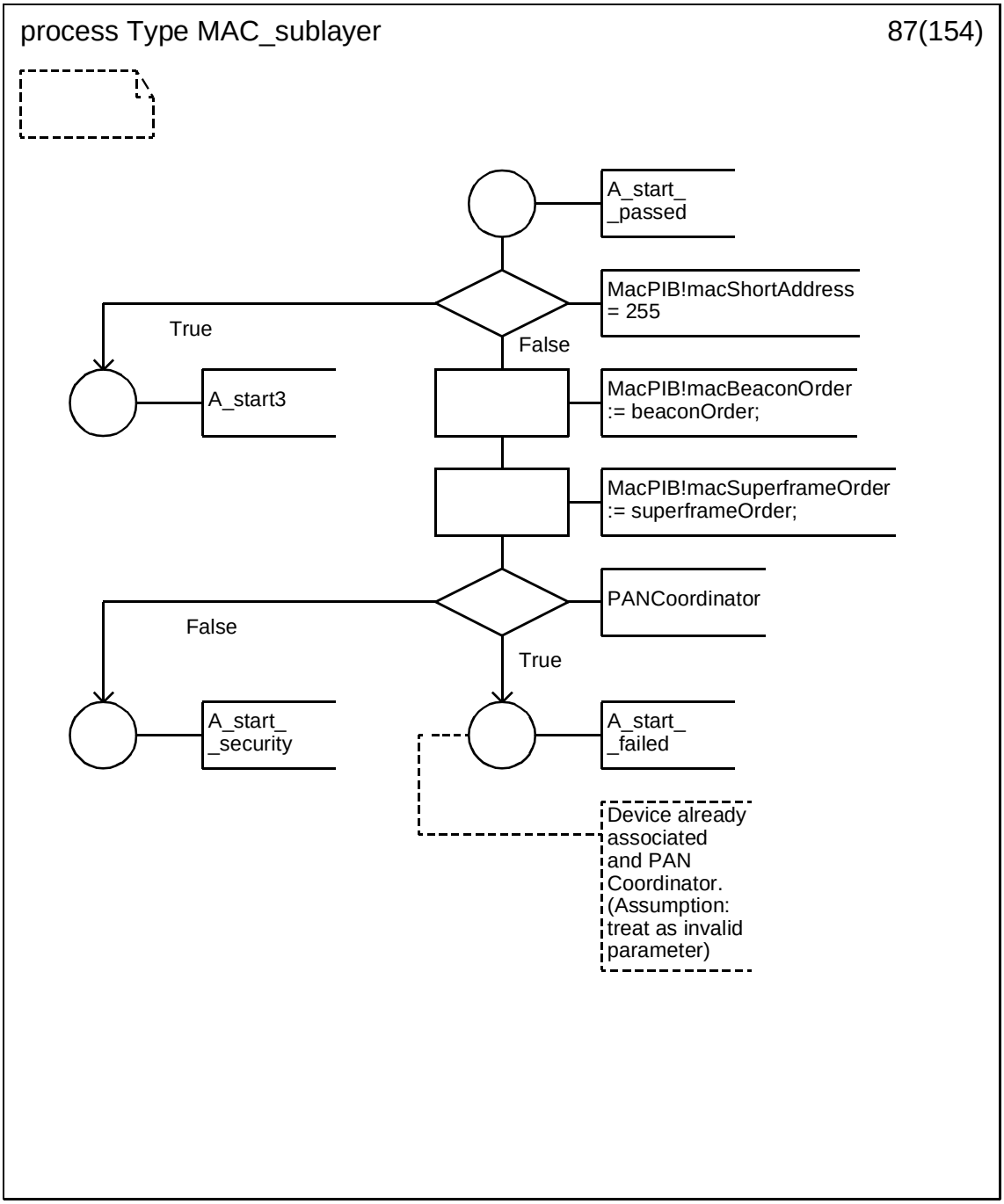


Copyright © 2003 IEEE. All rights reserved.

Authorized licensed use limited to: IEEE - Staff. Downloaded on October 28,2024 at 20:20:02 UTC from IEEE Xplore. Restrictions apply.

INTEL-1011
U.S. Patent 8,219,129

### D.3.1.88 Process type MAC_sublayer (88)

.

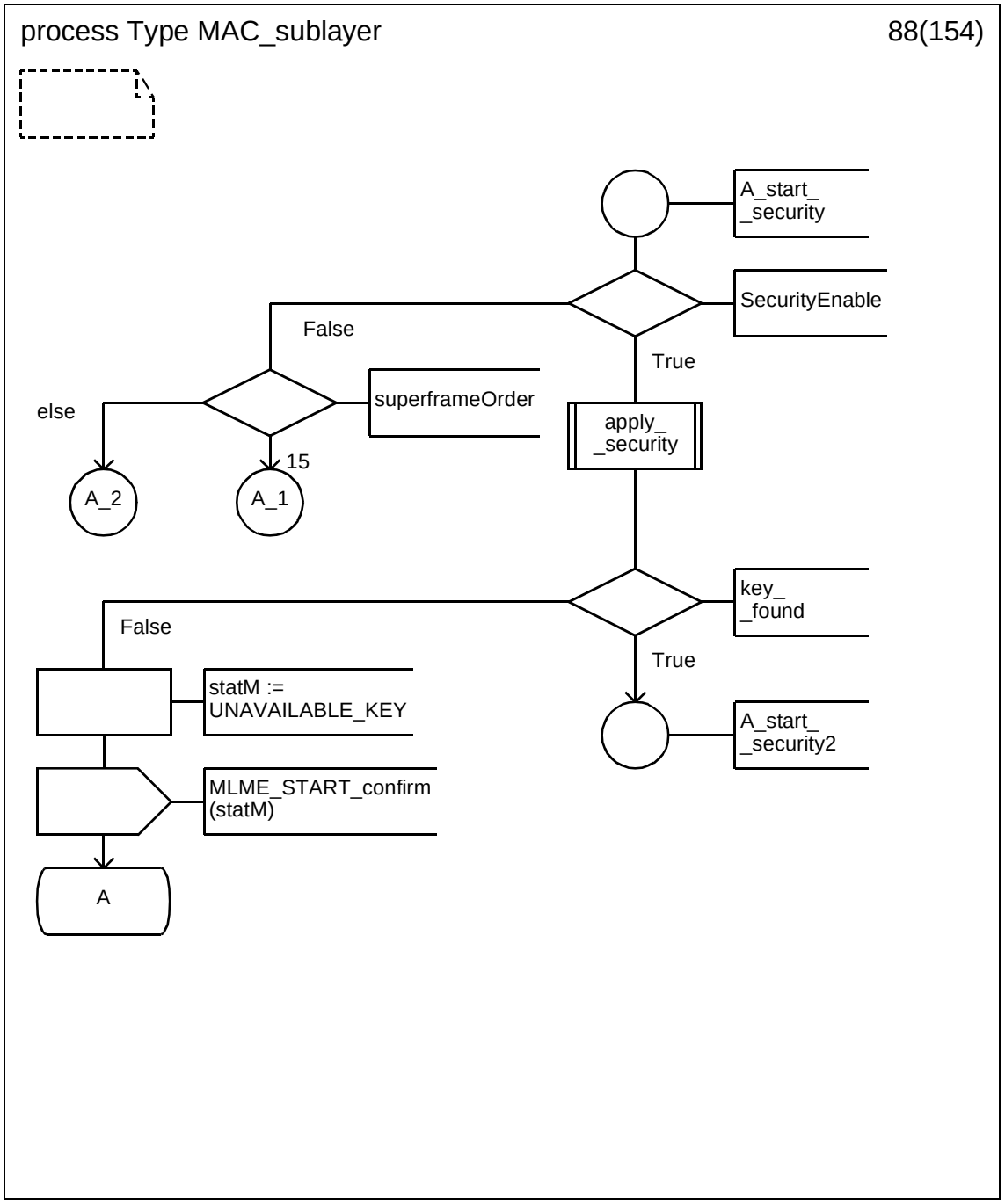



Copyright © 2003 IEEE. All rights reserved.
Authorized licensed use limited to: IEEE - Staff. Downloaded on October 28,2024 at 20:20:02 UTC from IEEE Xplore. Restrictions apply.

INTEL-1011
U.S. Patent 8,219,129

### D.3.1.89 Process type MAC_sublayer (89)

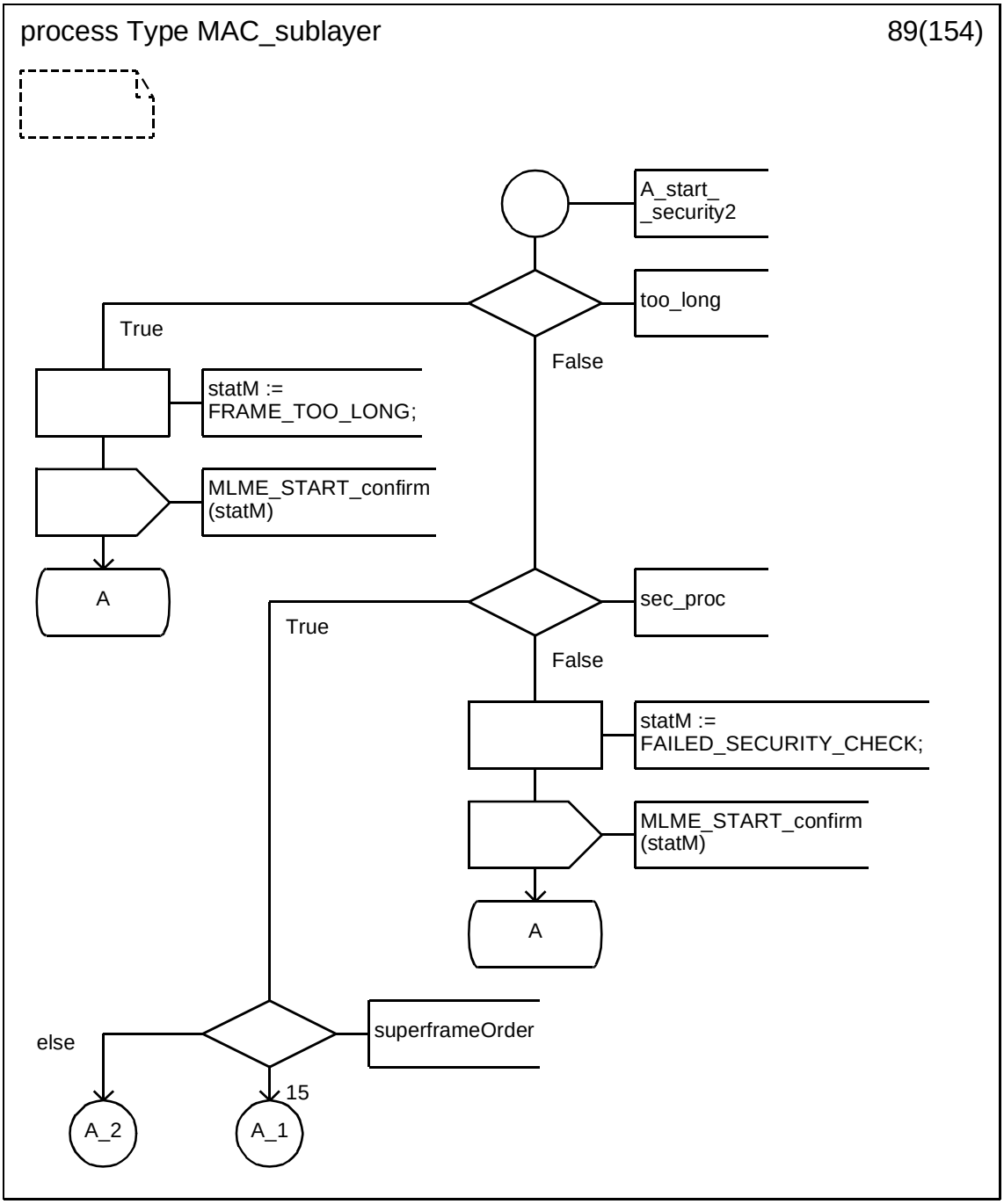


Copyright © 2003 IEEE. All rights reserved.

Authorized licensed use limited to: IEEE - Staff. Downloaded on October 28,2024 at 20:20:02 UTC from IEEE Xplore. Restrictions apply.

INTEL-1011
U.S. Patent 8,219,129

### D.3.1.90 Process type MAC_sublayer (90)

.

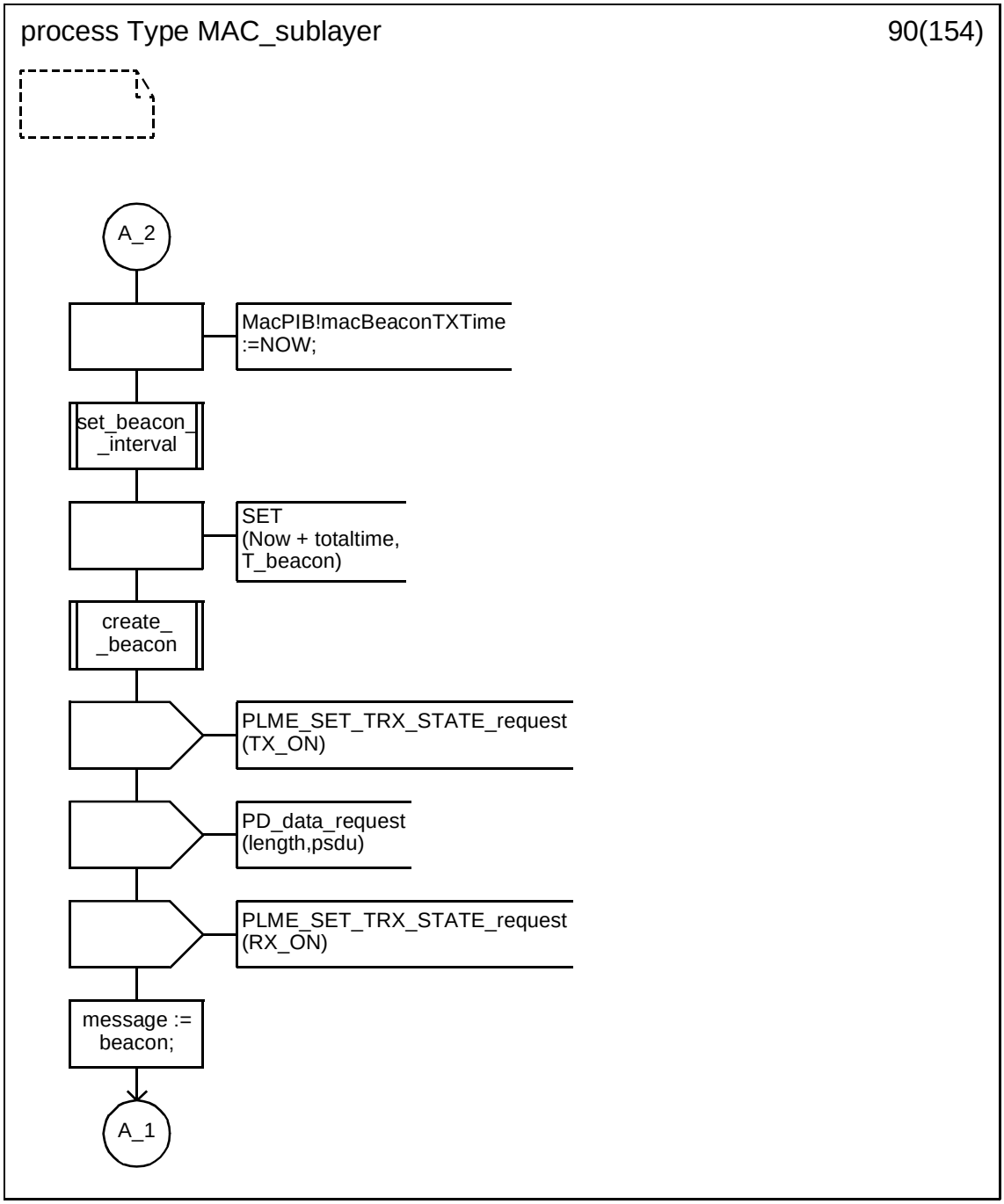



Copyright © 2003 IEEE. All rights reserved.
Authorized licensed use limited to: IEEE - Staff. Downloaded on October 28,2024 at 20:20:02 UTC from IEEE Xplore. Restrictions apply.

INTEL-1011
U.S. Patent 8,219,129

### D.3.1.91 Process type MAC_sublayer (91)

.

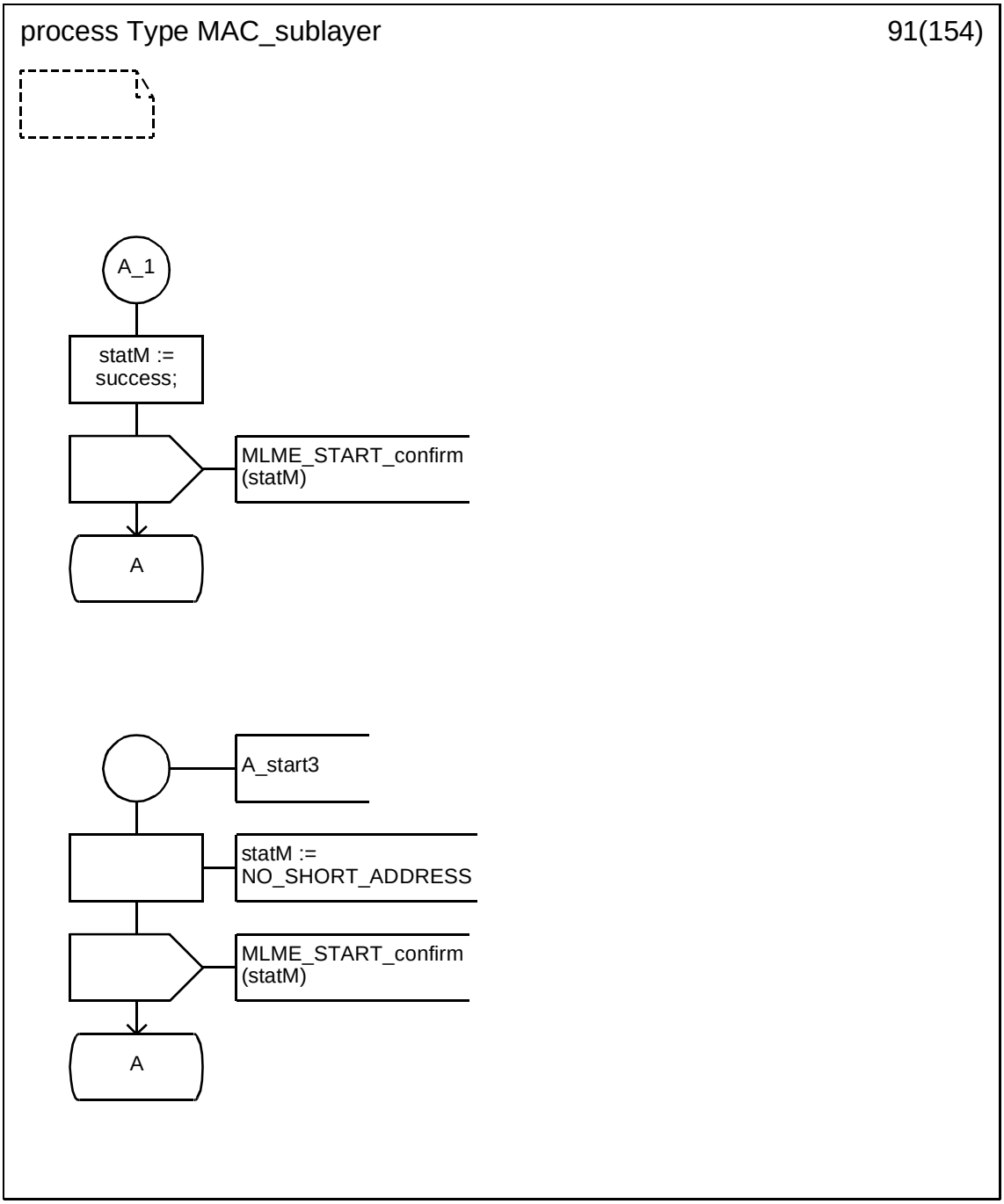


Copyright © 2003 IEEE. All rights reserved.

Authorized licensed use limited to: IEEE - Staff. Downloaded on October 28,2024 at 20:20:02 UTC from IEEE Xplore. Restrictions apply.

INTEL-1011
U.S. Patent 8,219,129

### D.3.1.92 Process type MAC_sublayer (92)

.

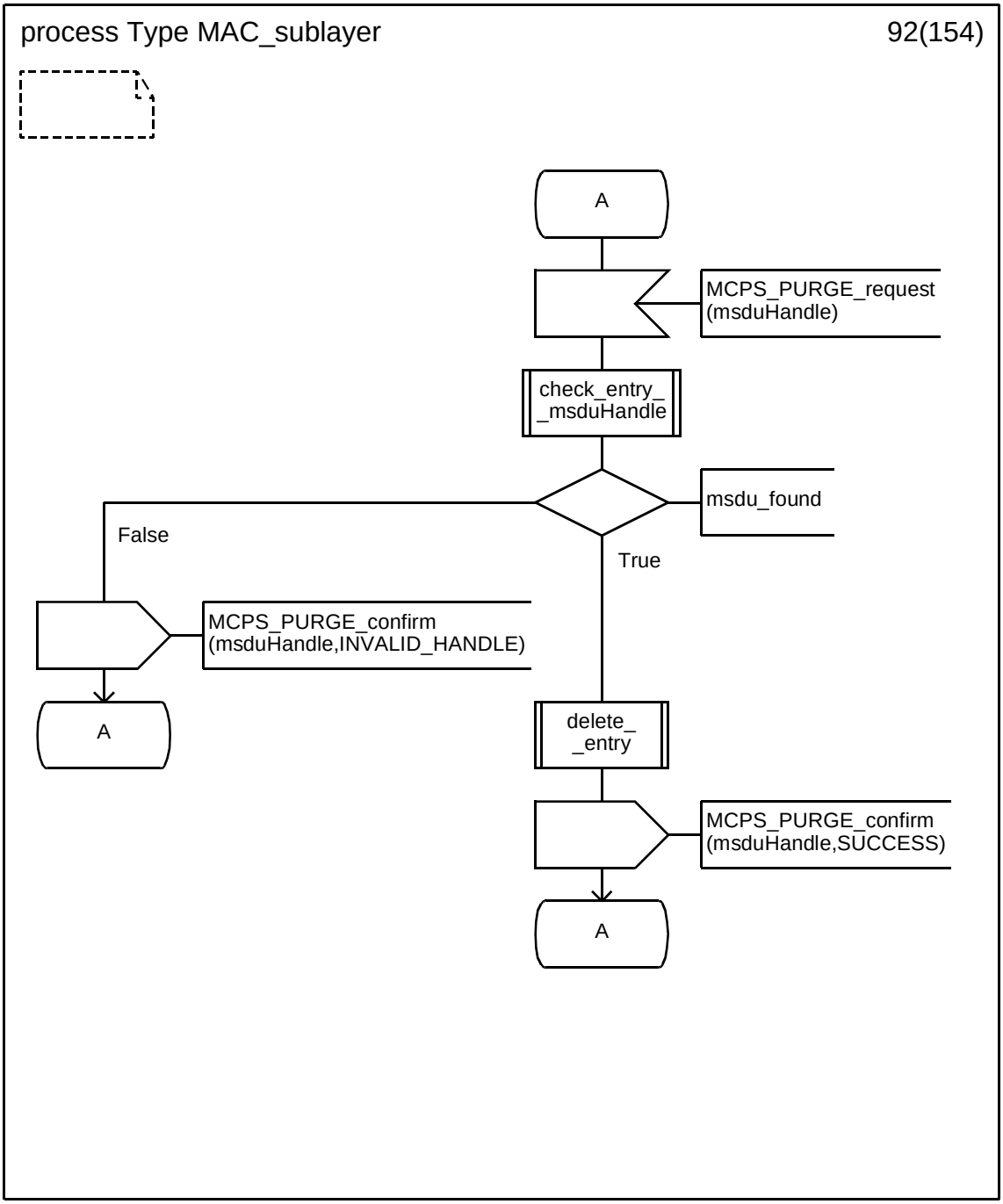



Copyright © 2003 IEEE. All rights reserved.
Authorized licensed use limited to: IEEE - Staff. Downloaded on October 28,2024 at 20:20:02 UTC from IEEE Xplore. Restrictions apply.

INTEL-1011
U.S. Patent 8,219,129

### D.3.1.93 Process type MAC_sublayer (93)

.

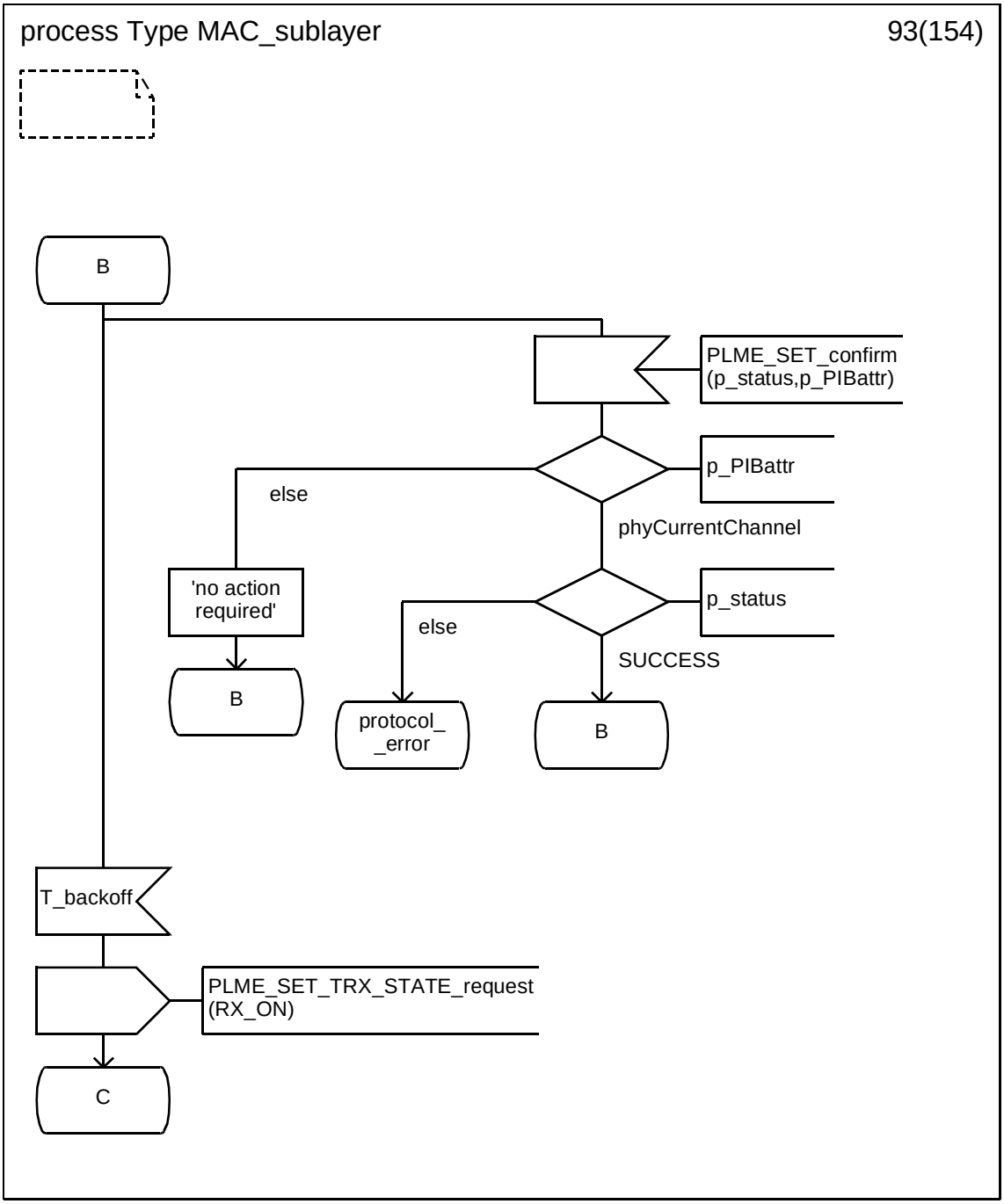


Copyright © 2003 IEEE. All rights reserved.

Authorized licensed use limited to: IEEE - Staff. Downloaded on October 28,2024 at 20:20:02 UTC from IEEE Xplore. Restrictions apply.

INTEL-1011
U.S. Patent 8,219,129

### D.3.1.94 Process type MAC_sublayer (94)

.

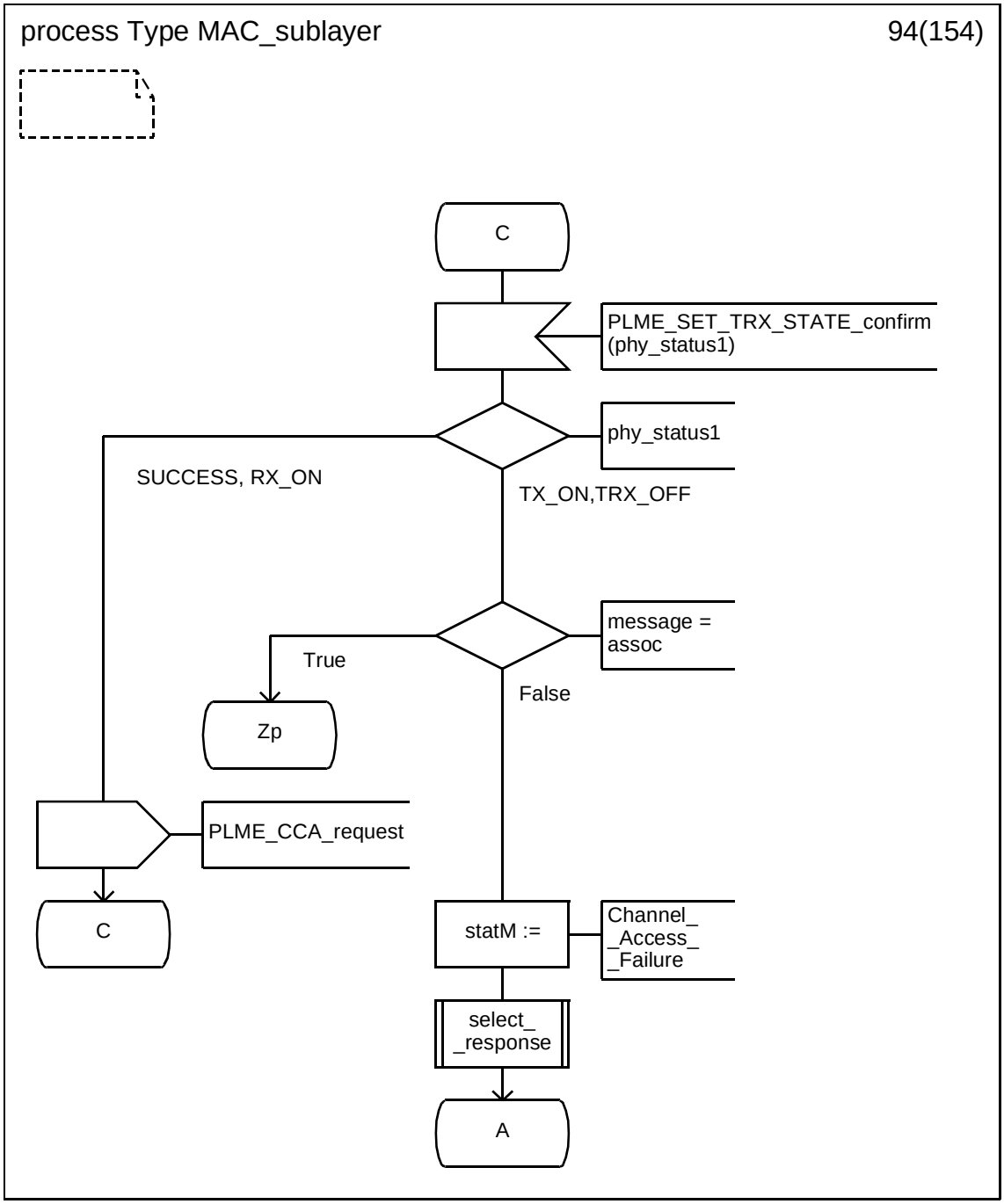



Copyright © 2003 IEEE. All rights reserved.
Authorized licensed use limited to: IEEE - Staff. Downloaded on October 28,2024 at 20:20:02 UTC from IEEE Xplore. Restrictions apply.

INTEL-1011
U.S. Patent 8,219,129

### D.3.1.95 Process type MAC_sublayer (95)

.

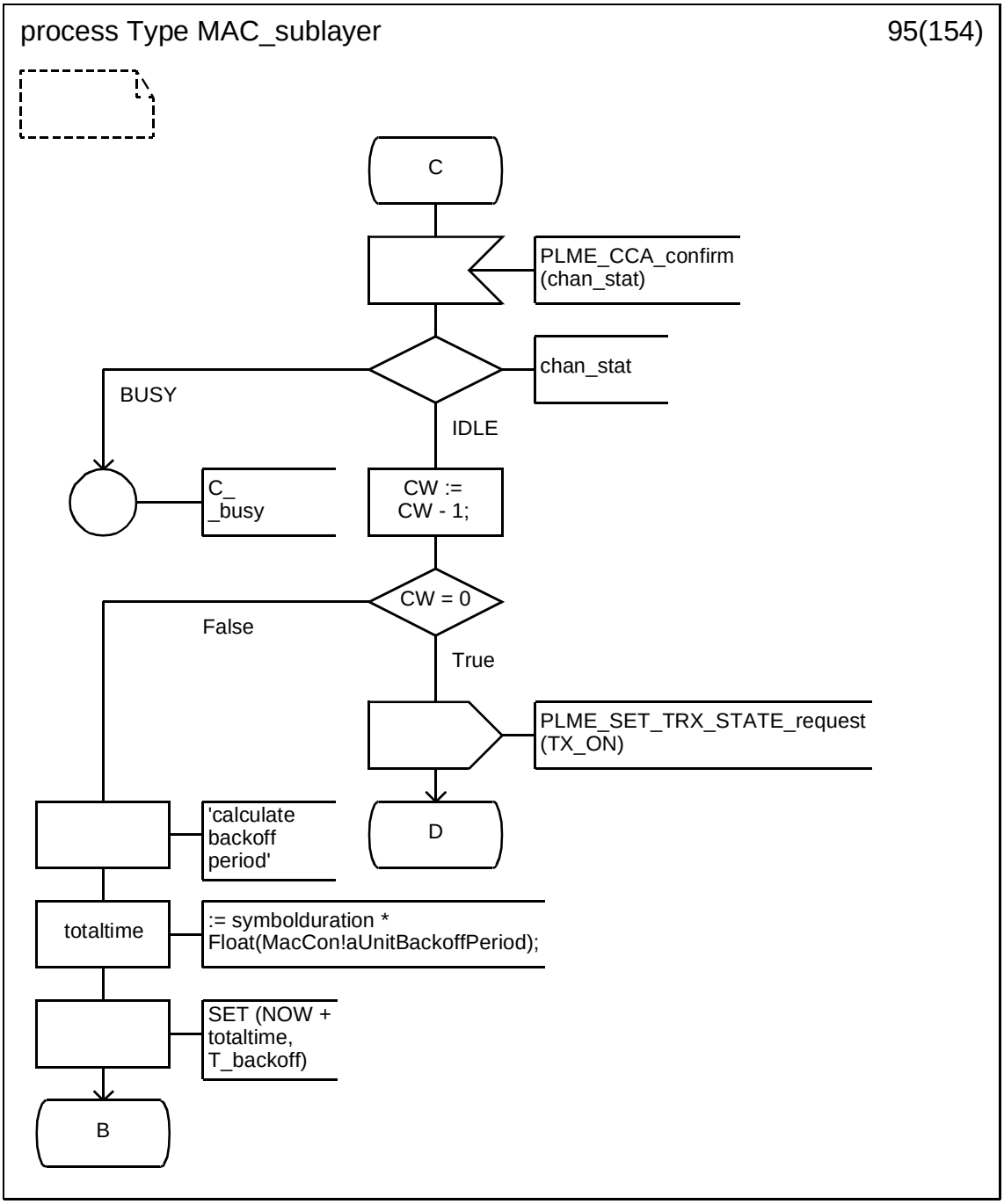


Copyright © 2003 IEEE. All rights reserved.

Authorized licensed use limited to: IEEE - Staff. Downloaded on October 28,2024 at 20:20:02 UTC from IEEE Xplore. Restrictions apply.

INTEL-1011
U.S. Patent 8,219,129

### D.3.1.96 Process type MAC_sublayer (96)

.

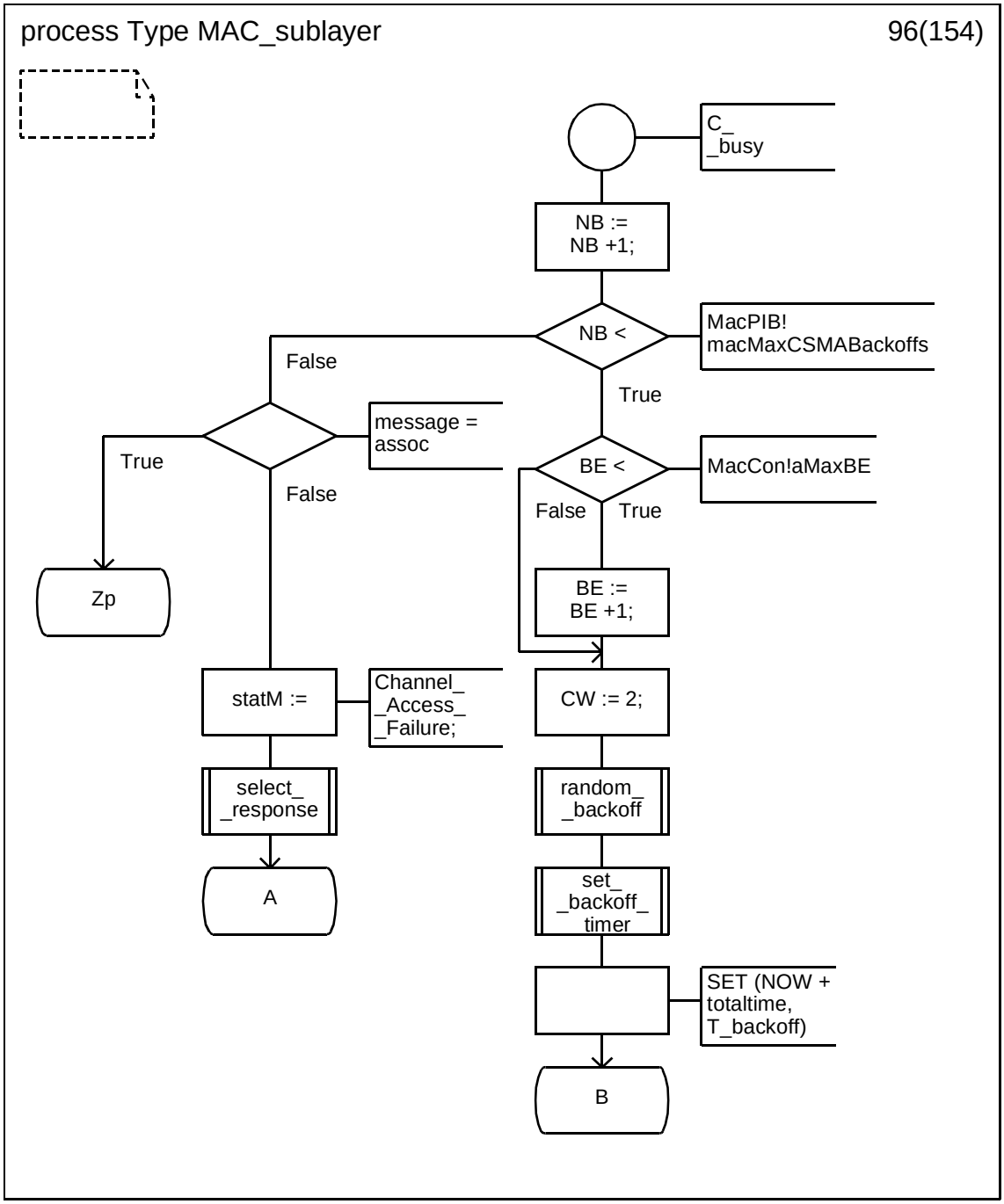



Copyright © 2003 IEEE. All rights reserved.
Authorized licensed use limited to: IEEE - Staff. Downloaded on October 28,2024 at 20:20:02 UTC from IEEE Xplore. Restrictions apply.

INTEL-1011
U.S. Patent 8,219,129

### D.3.1.97 Process type MAC_sublayer (97)

.

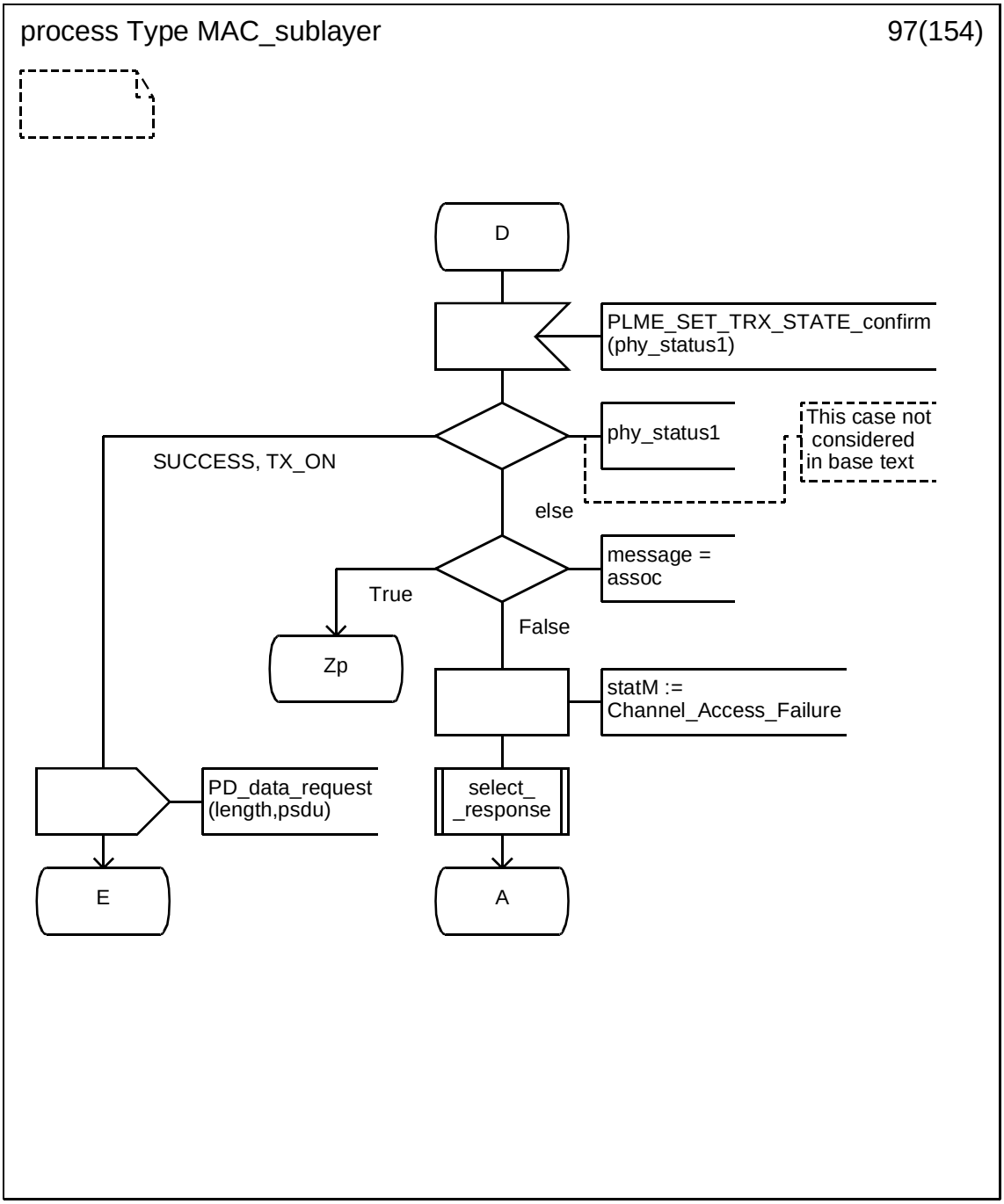


Copyright © 2003 IEEE. All rights reserved.

Authorized licensed use limited to: IEEE - Staff. Downloaded on October 28,2024 at 20:20:02 UTC from IEEE Xplore. Restrictions apply.

INTEL-1011
U.S. Patent 8,219,129

### D.3.1.98 Process type MAC_sublayer (98)

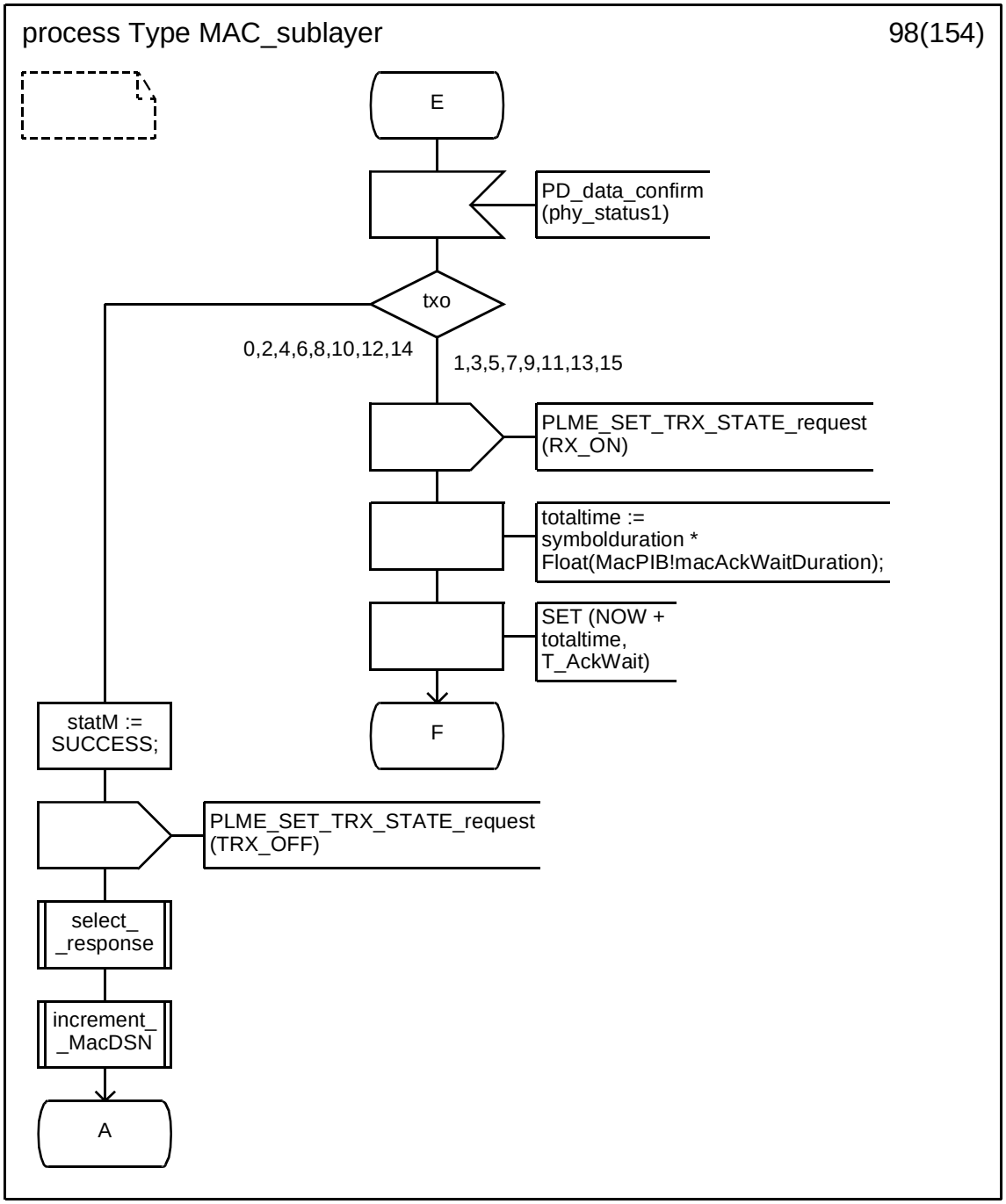



Copyright © 2003 IEEE. All rights reserved.
Authorized licensed use limited to: IEEE - Staff. Downloaded on October 28,2024 at 20:20:02 UTC from IEEE Xplore. Restrictions apply.

INTEL-1011
U.S. Patent 8,219,129

### D.3.1.99 Process type MAC_sublayer (99)

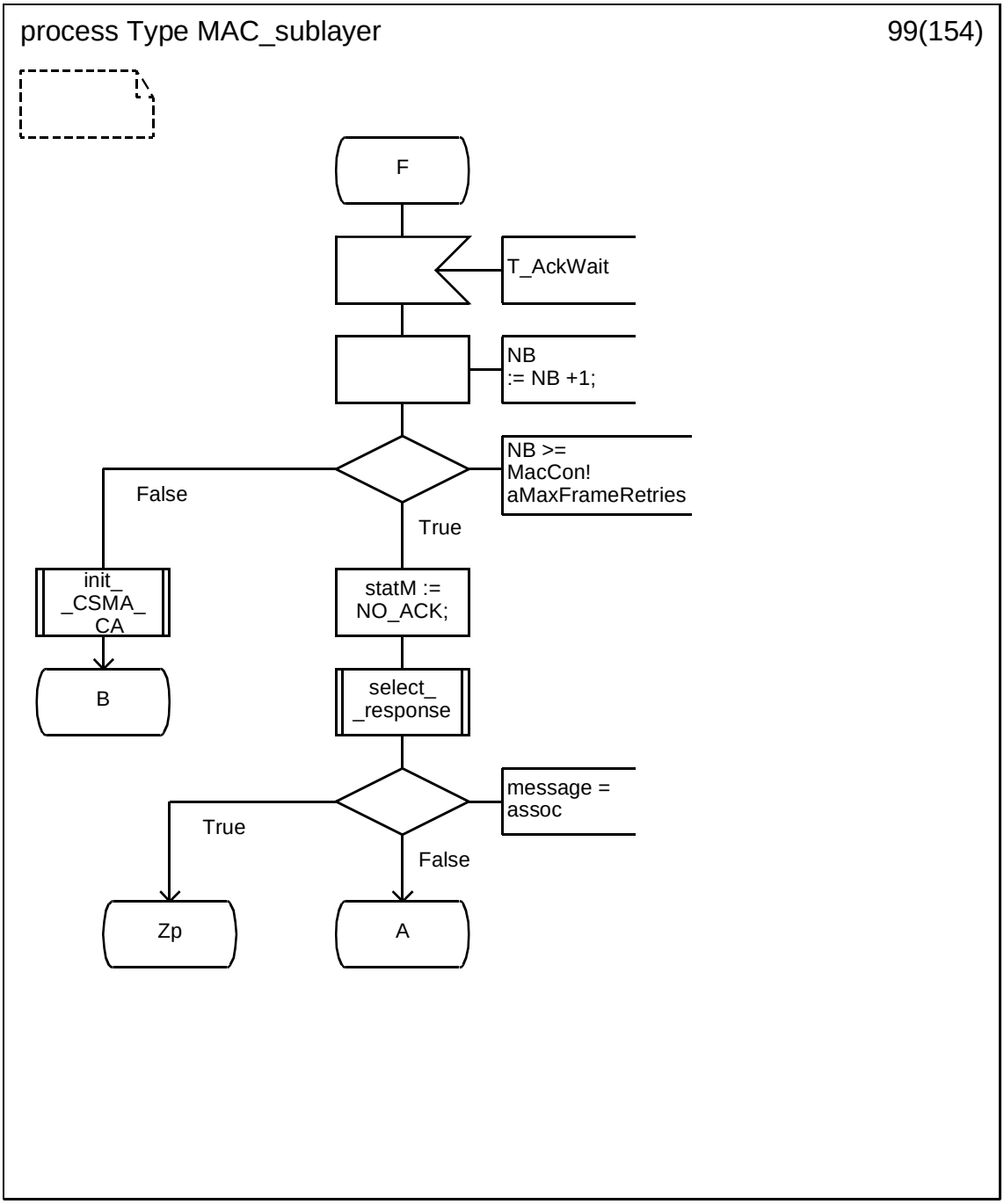


Copyright © 2003 IEEE. All rights reserved.

Authorized licensed use limited to: IEEE - Staff. Downloaded on October 28,2024 at 20:20:02 UTC from IEEE Xplore. Restrictions apply.

INTEL-1011
U.S. Patent 8,219,129

### D.3.1.100 Process type MAC_sublayer (100)

.

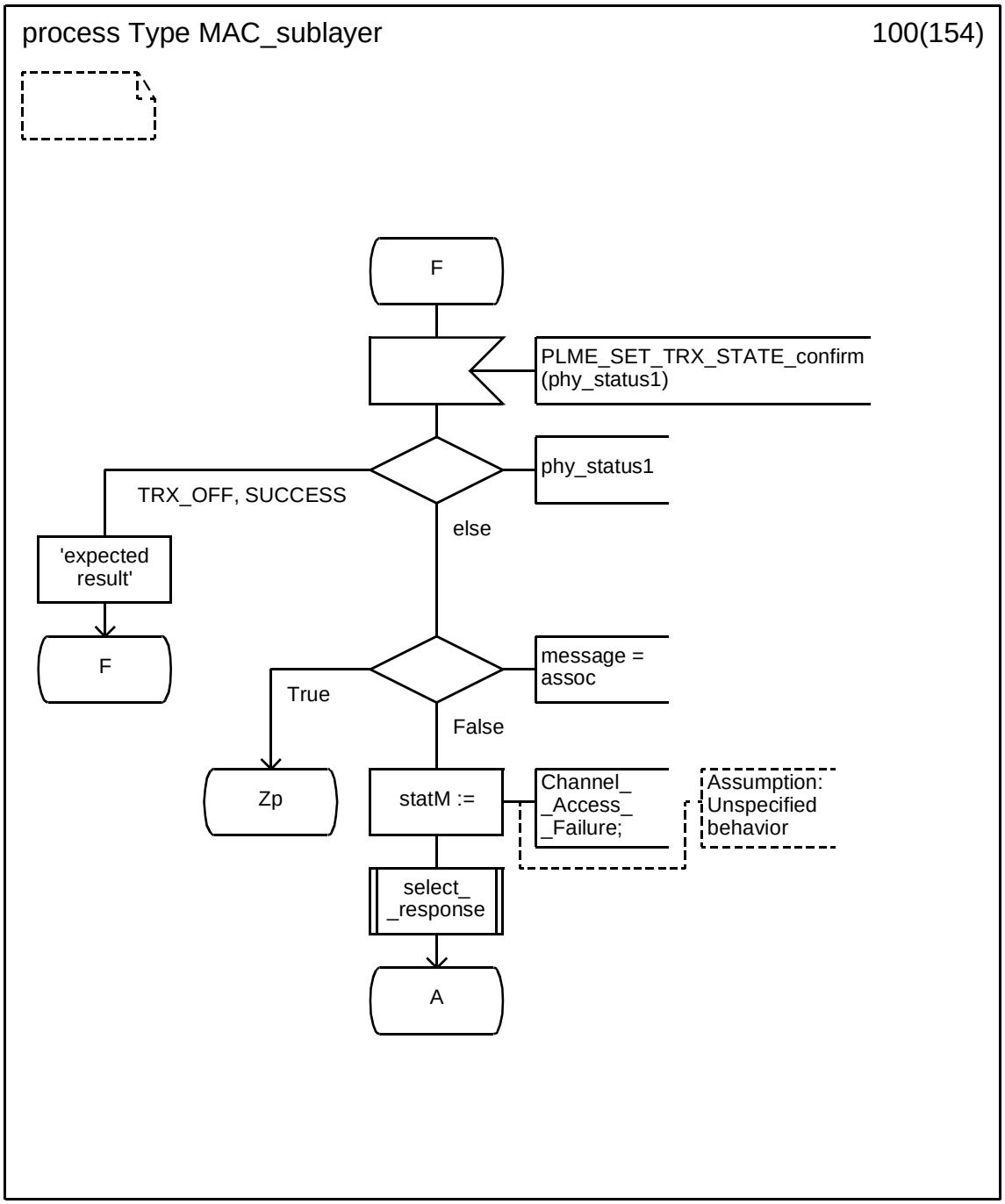



Copyright © 2003 IEEE. All rights reserved.
Authorized licensed use limited to: IEEE - Staff. Downloaded on October 28,2024 at 20:20:02 UTC from IEEE Xplore. Restrictions apply.

INTEL-1011
U.S. Patent 8,219,129

### D.3.1.101 Process type MAC_sublayer (101)

.

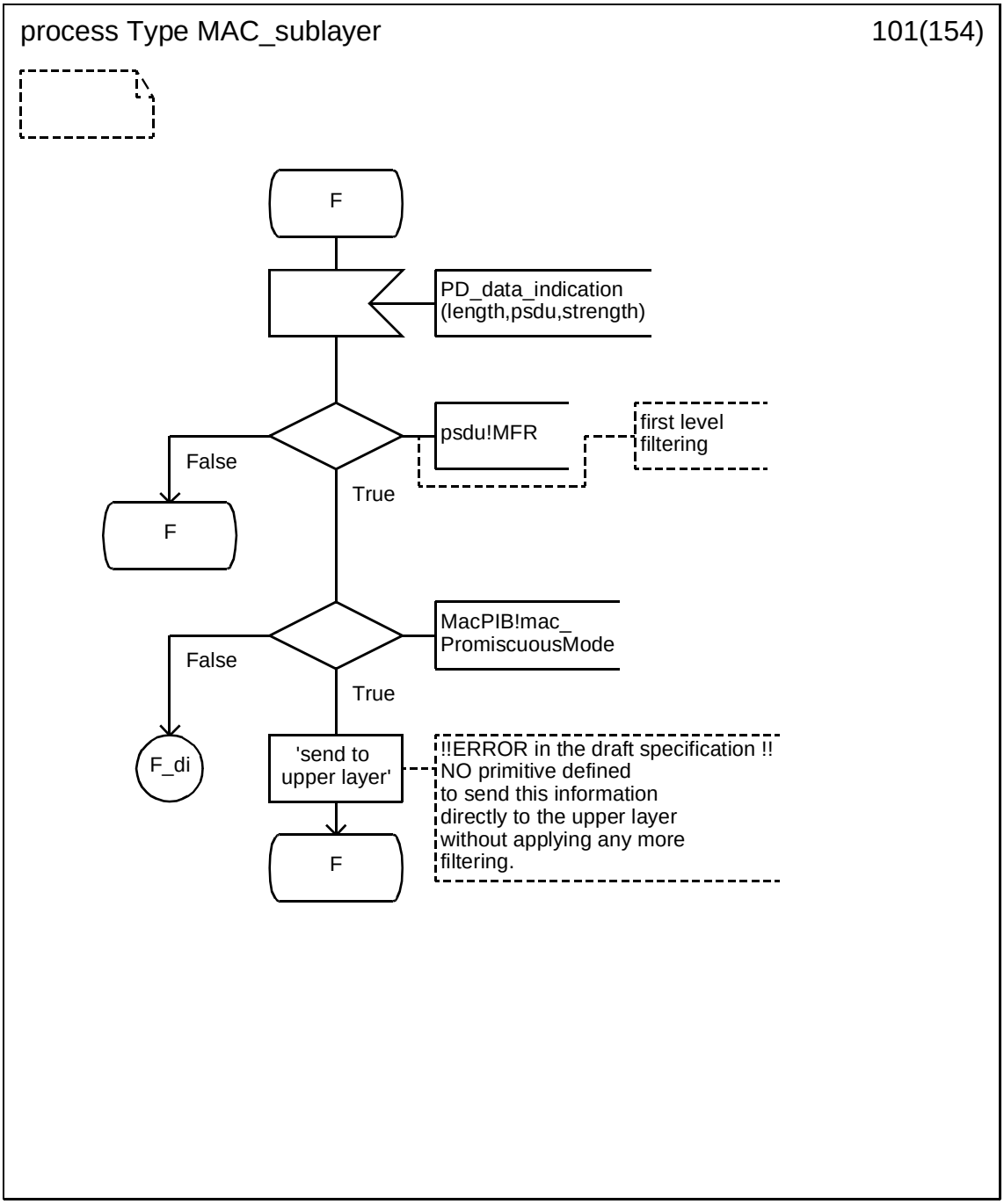


Copyright © 2003 IEEE. All rights reserved.

Authorized licensed use limited to: IEEE - Staff. Downloaded on October 28,2024 at 20:20:02 UTC from IEEE Xplore. Restrictions apply.

INTEL-1011
U.S. Patent 8,219,129

### D.3.1.102 Process type MAC_sublayer (102)

.

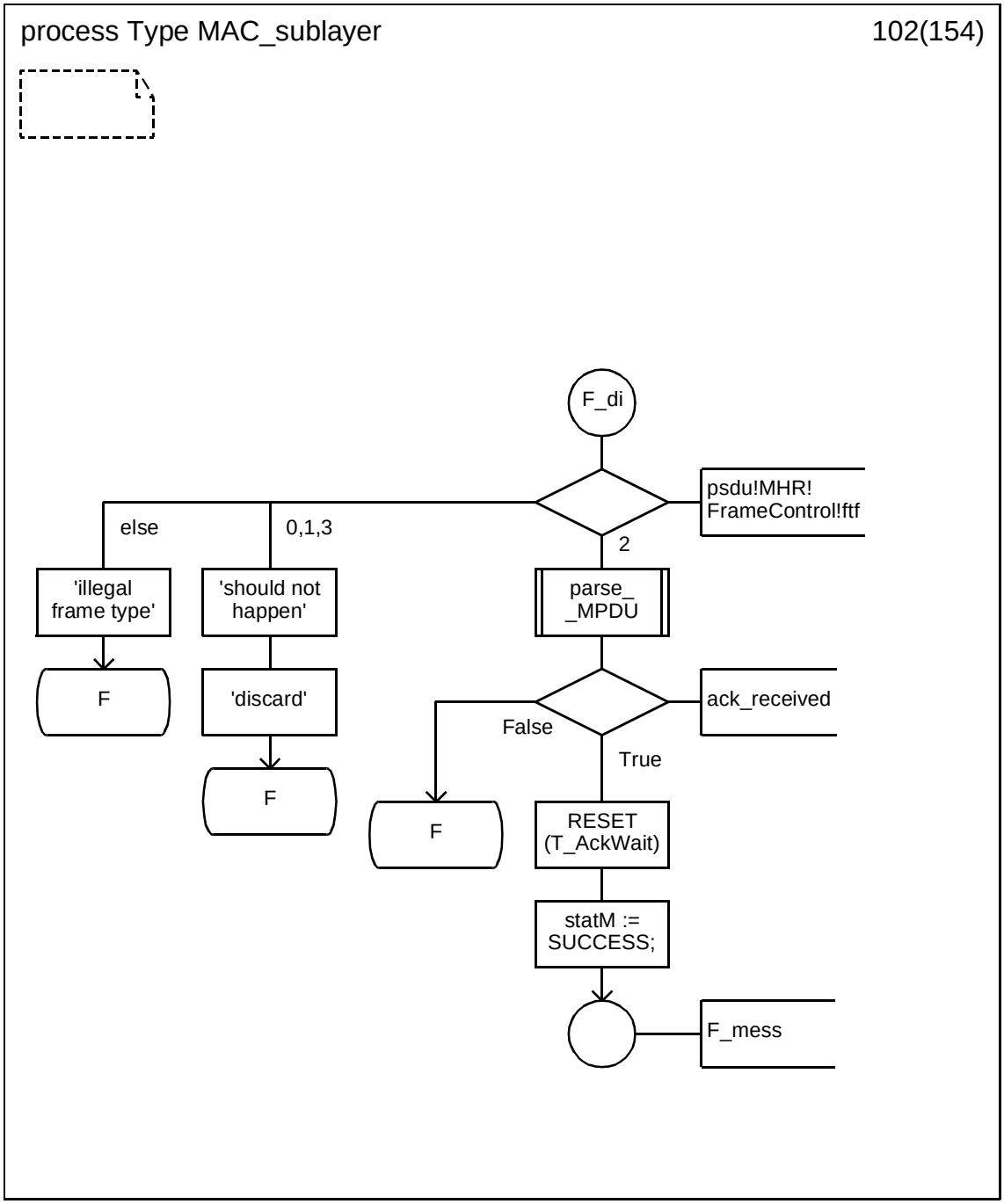



Copyright © 2003 IEEE. All rights reserved.
Authorized licensed use limited to: IEEE - Staff. Downloaded on October 28,2024 at 20:20:02 UTC from IEEE Xplore. Restrictions apply.

INTEL-1011
U.S. Patent 8,219,129

### D.3.1.103 Process type MAC_sublayer (103)

.

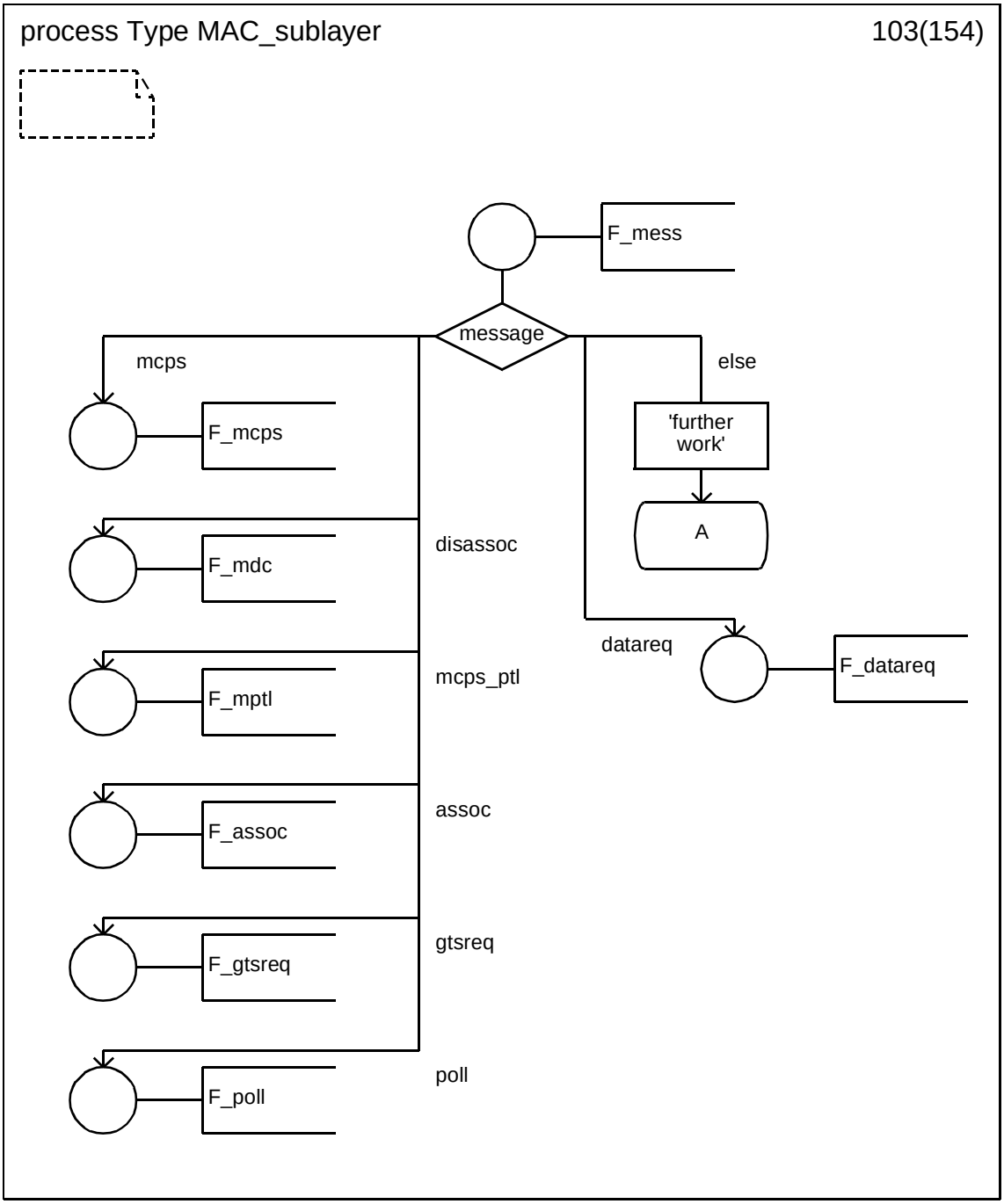


Copyright © 2003 IEEE. All rights reserved.

Authorized licensed use limited to: IEEE - Staff. Downloaded on October 28,2024 at 20:20:02 UTC from IEEE Xplore. Restrictions apply.

INTEL-1011
U.S. Patent 8,219,129

### D.3.1.104 Process type MAC_sublayer (104)

.

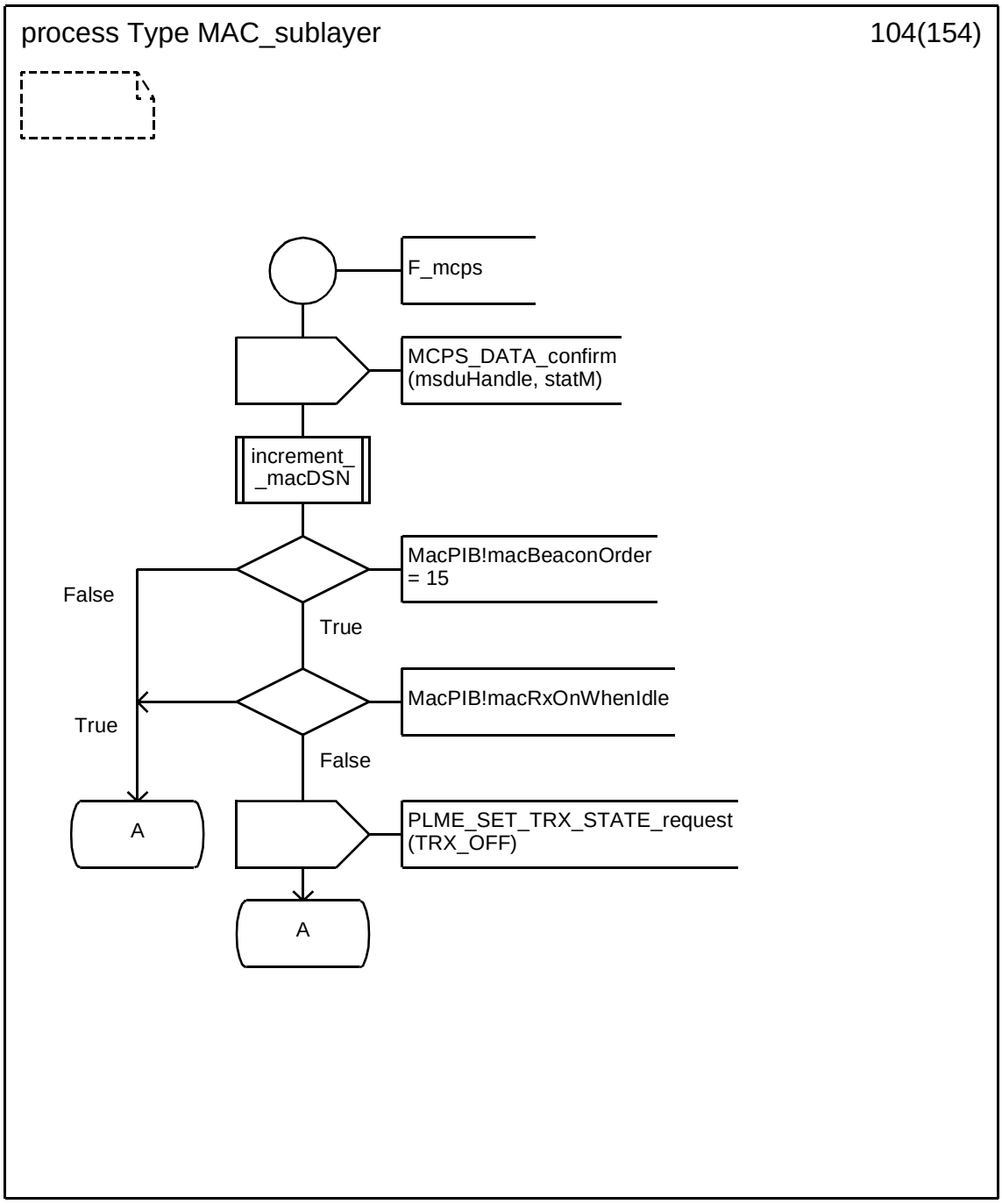



Copyright © 2003 IEEE. All rights reserved.
Authorized licensed use limited to: IEEE - Staff. Downloaded on October 28,2024 at 20:20:02 UTC from IEEE Xplore. Restrictions apply.

INTEL-1011
U.S. Patent 8,219,129

### D.3.1.105 Process type MAC_sublayer (105)

.

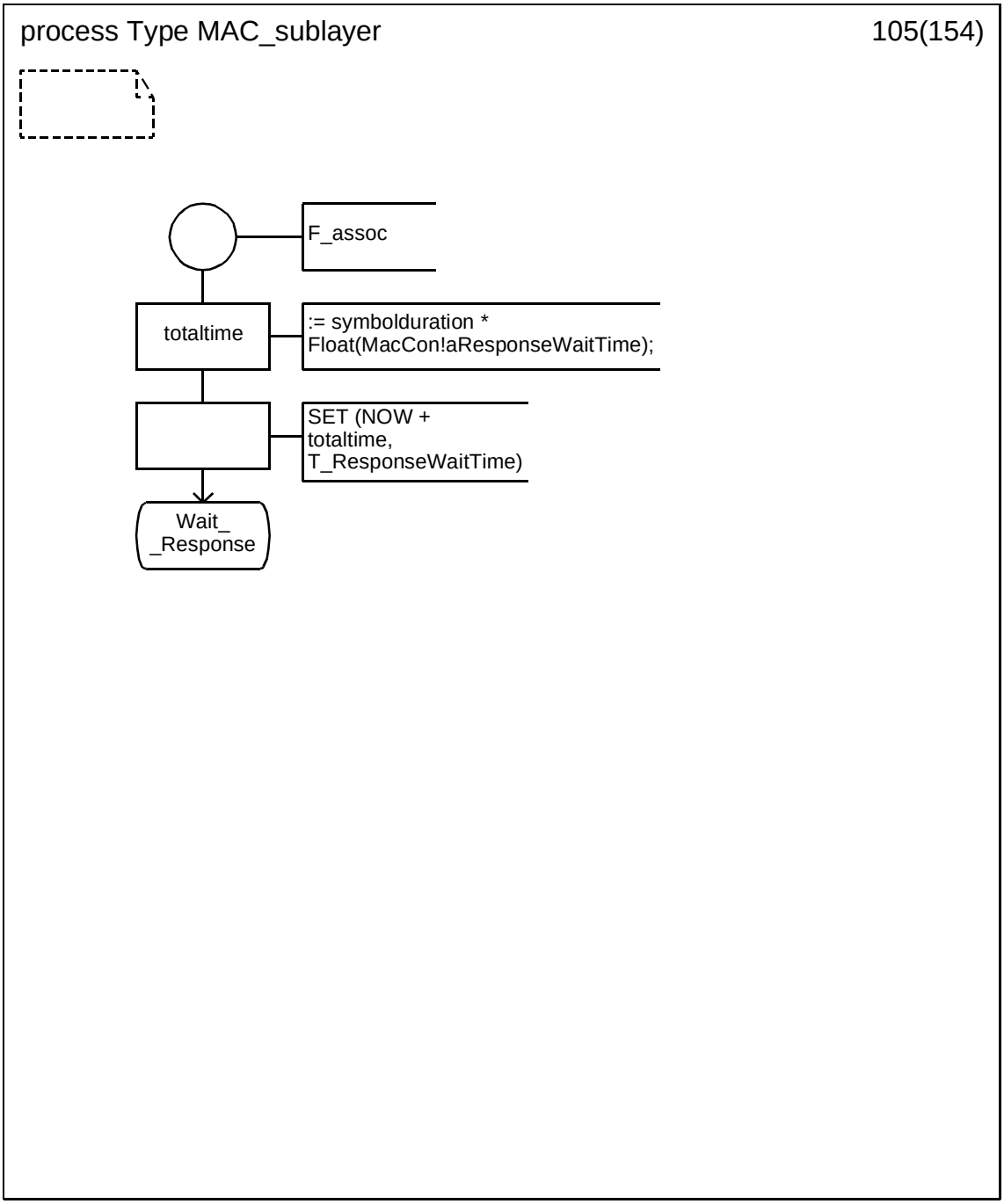


Copyright © 2003 IEEE. All rights reserved.

Authorized licensed use limited to: IEEE - Staff. Downloaded on October 28,2024 at 20:20:02 UTC from IEEE Xplore. Restrictions apply.

INTEL-1011
U.S. Patent 8,219,129

### D.3.1.106 Process type MAC_sublayer (106)

.

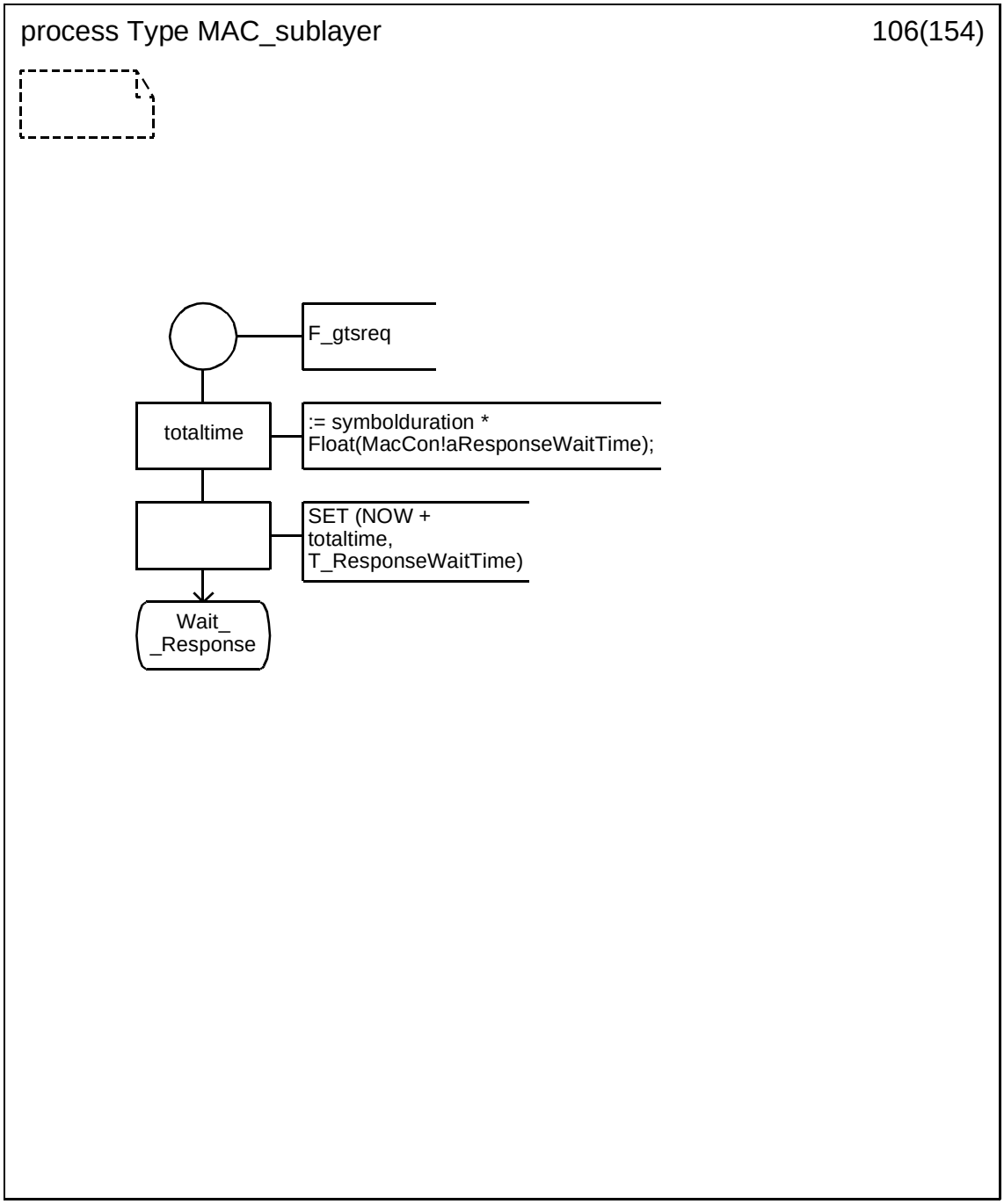



Copyright © 2003 IEEE. All rights reserved.
Authorized licensed use limited to: IEEE - Staff. Downloaded on October 28,2024 at 20:20:02 UTC from IEEE Xplore. Restrictions apply.

INTEL-1011
U.S. Patent 8,219,129

### D.3.1.107 Process type MAC_sublayer (107)

.

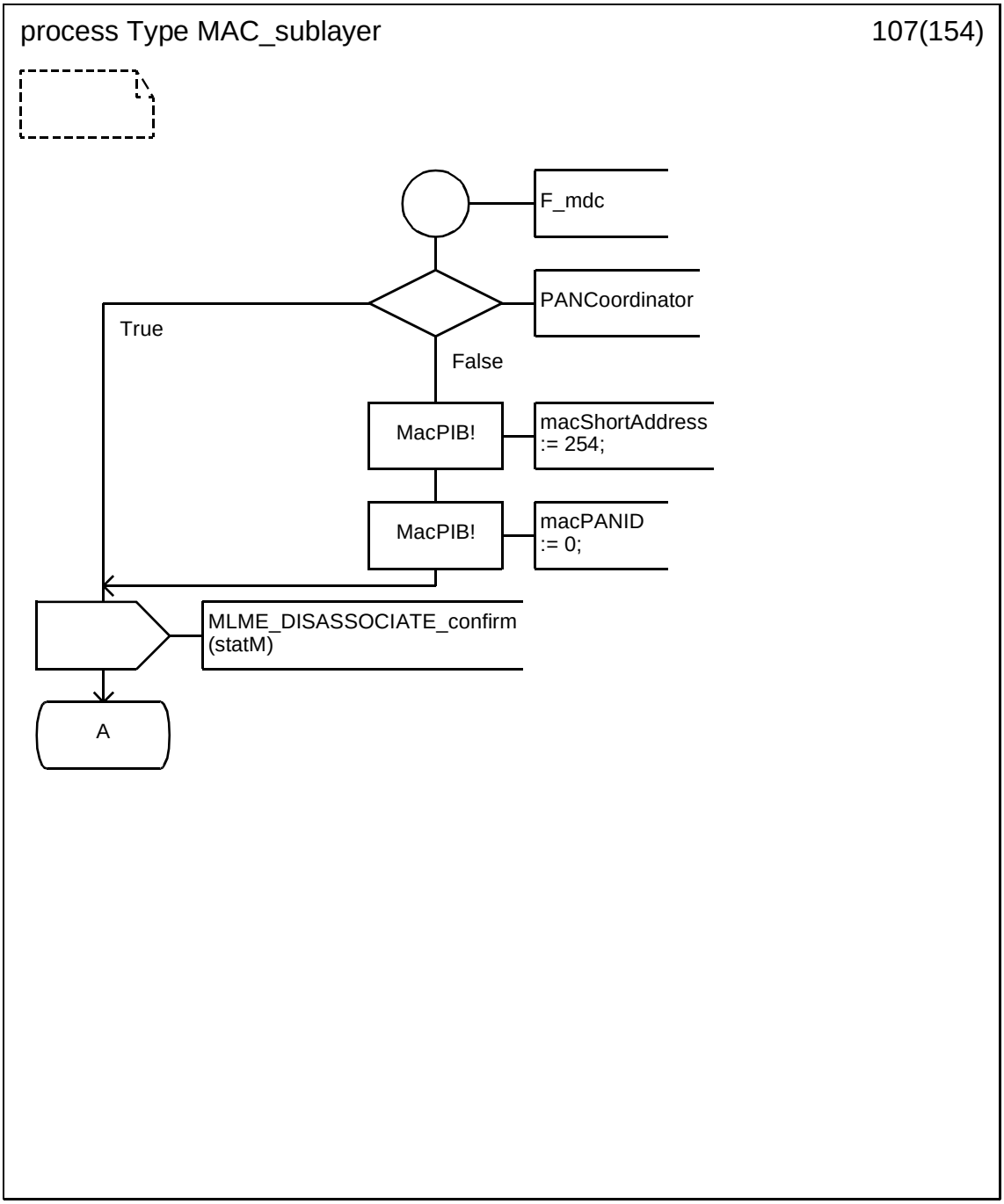


Copyright © 2003 IEEE. All rights reserved.

Authorized licensed use limited to: IEEE - Staff. Downloaded on October 28,2024 at 20:20:02 UTC from IEEE Xplore. Restrictions apply.

INTEL-1011
U.S. Patent 8,219,129

### D.3.1.108 Process type MAC_sublayer (108)

.

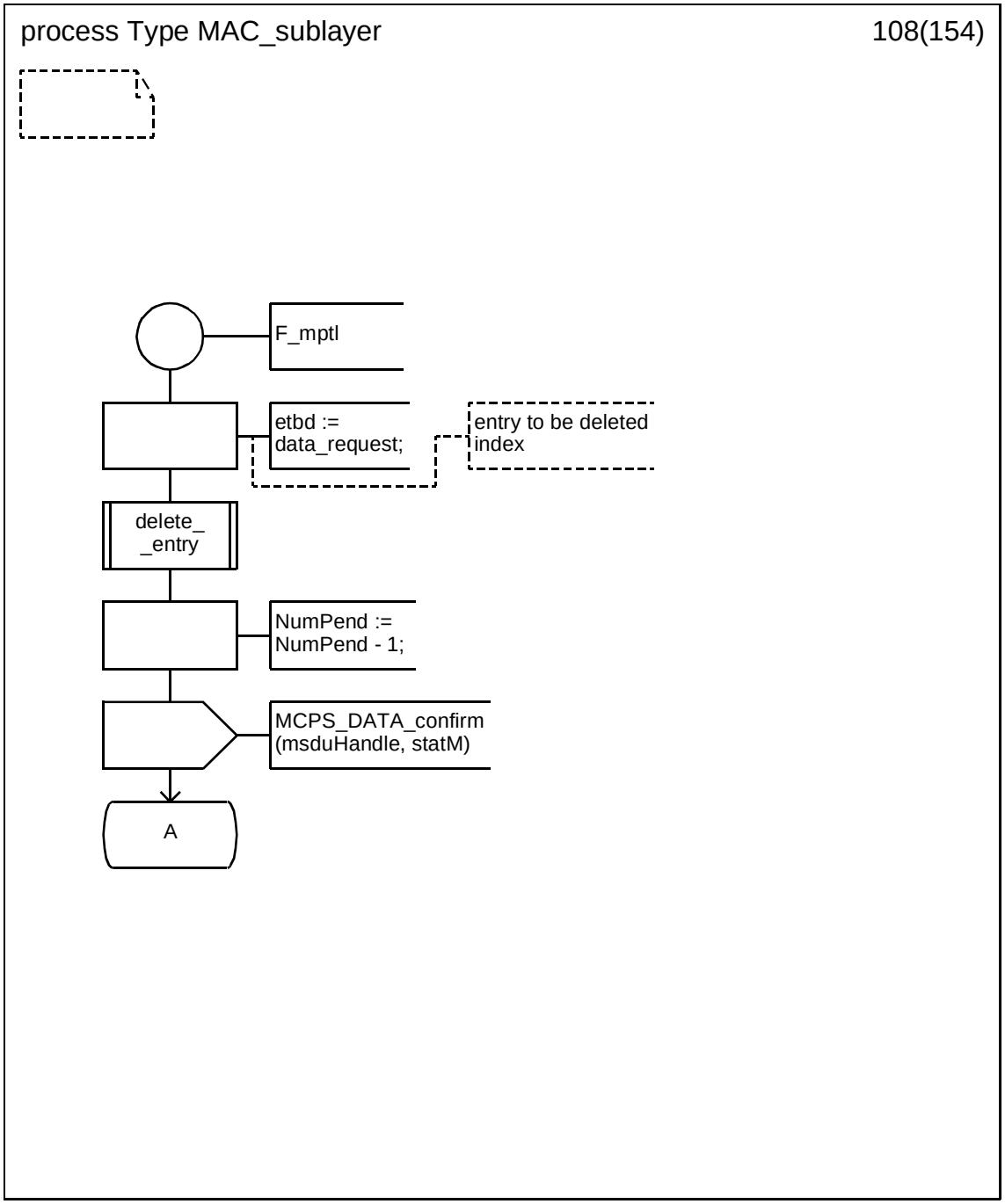



Copyright © 2003 IEEE. All rights reserved.
Authorized licensed use limited to: IEEE - Staff. Downloaded on October 28,2024 at 20:20:02 UTC from IEEE Xplore. Restrictions apply.

INTEL-1011
U.S. Patent 8,219,129

### D.3.1.109 Process type MAC_sublayer (109)

.

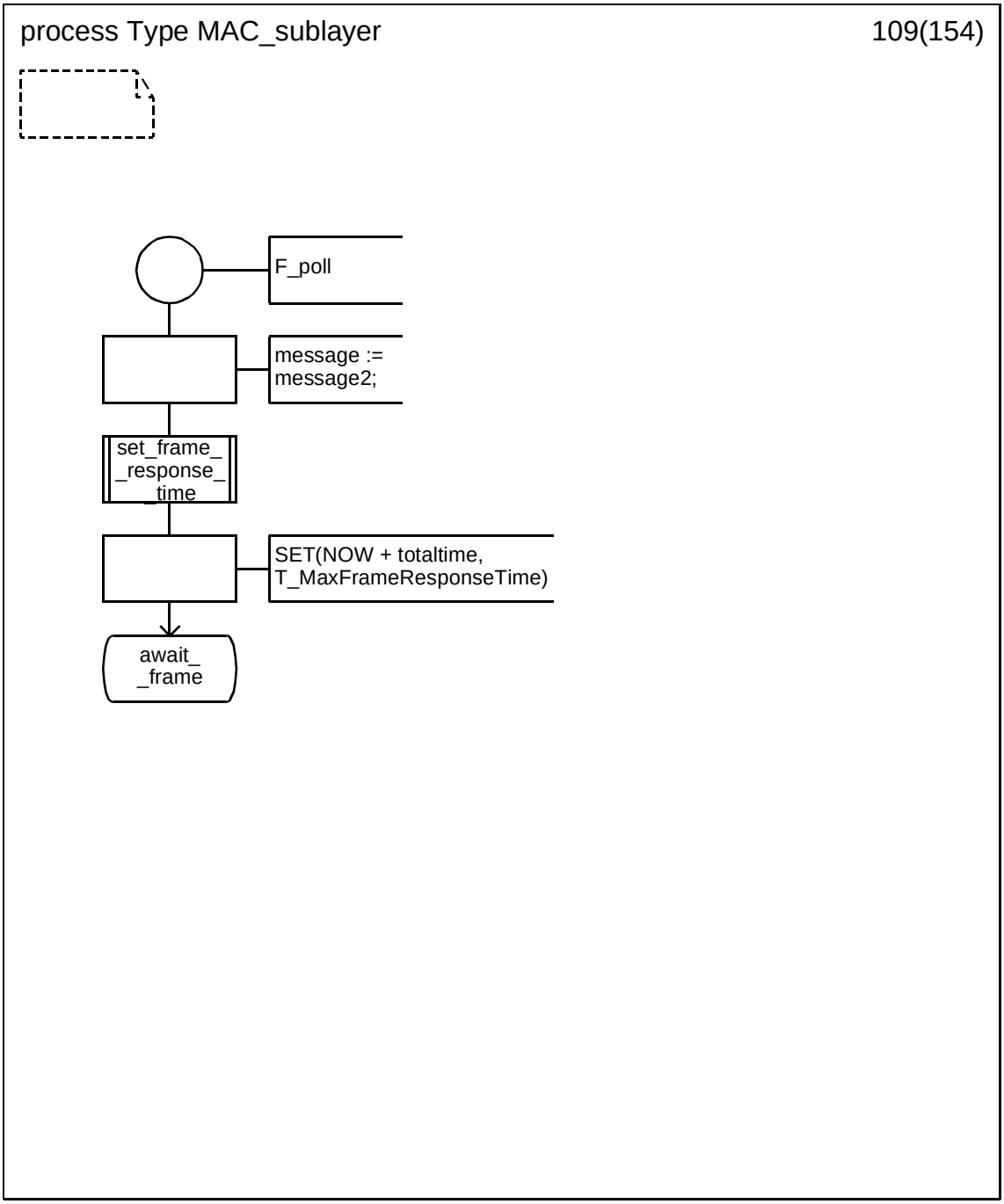


Copyright © 2003 IEEE. All rights reserved.

Authorized licensed use limited to: IEEE - Staff. Downloaded on October 28,2024 at 20:20:02 UTC from IEEE Xplore. Restrictions apply.

INTEL-1011
U.S. Patent 8,219,129

### D.3.1.110 Process type MAC_sublayer (110)

.

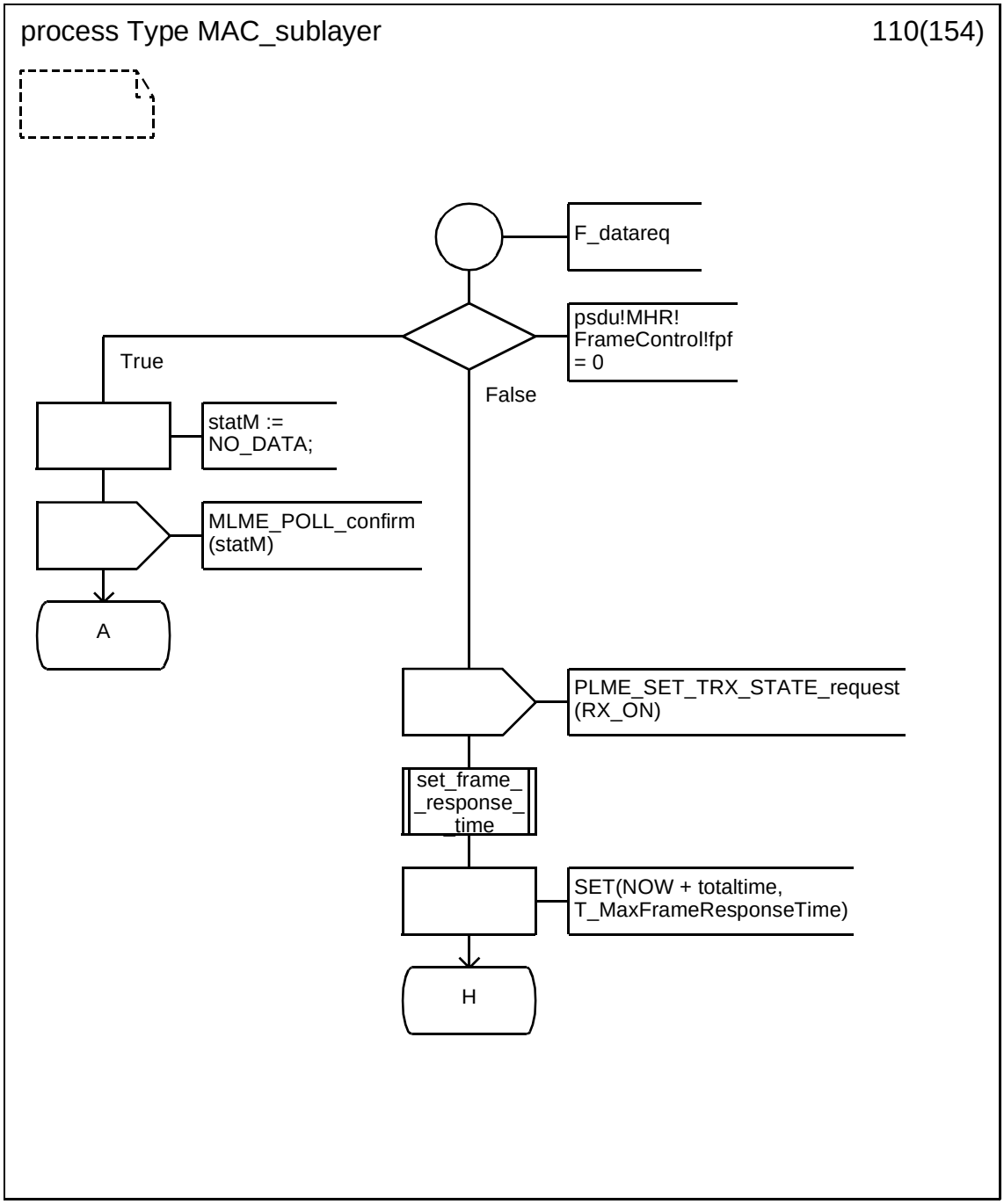



Copyright © 2003 IEEE. All rights reserved.
Authorized licensed use limited to: IEEE - Staff. Downloaded on October 28,2024 at 20:20:02 UTC from IEEE Xplore. Restrictions apply.

INTEL-1011
U.S. Patent 8,219,129

### D.3.1.111 Process type MAC_sublayer (111)

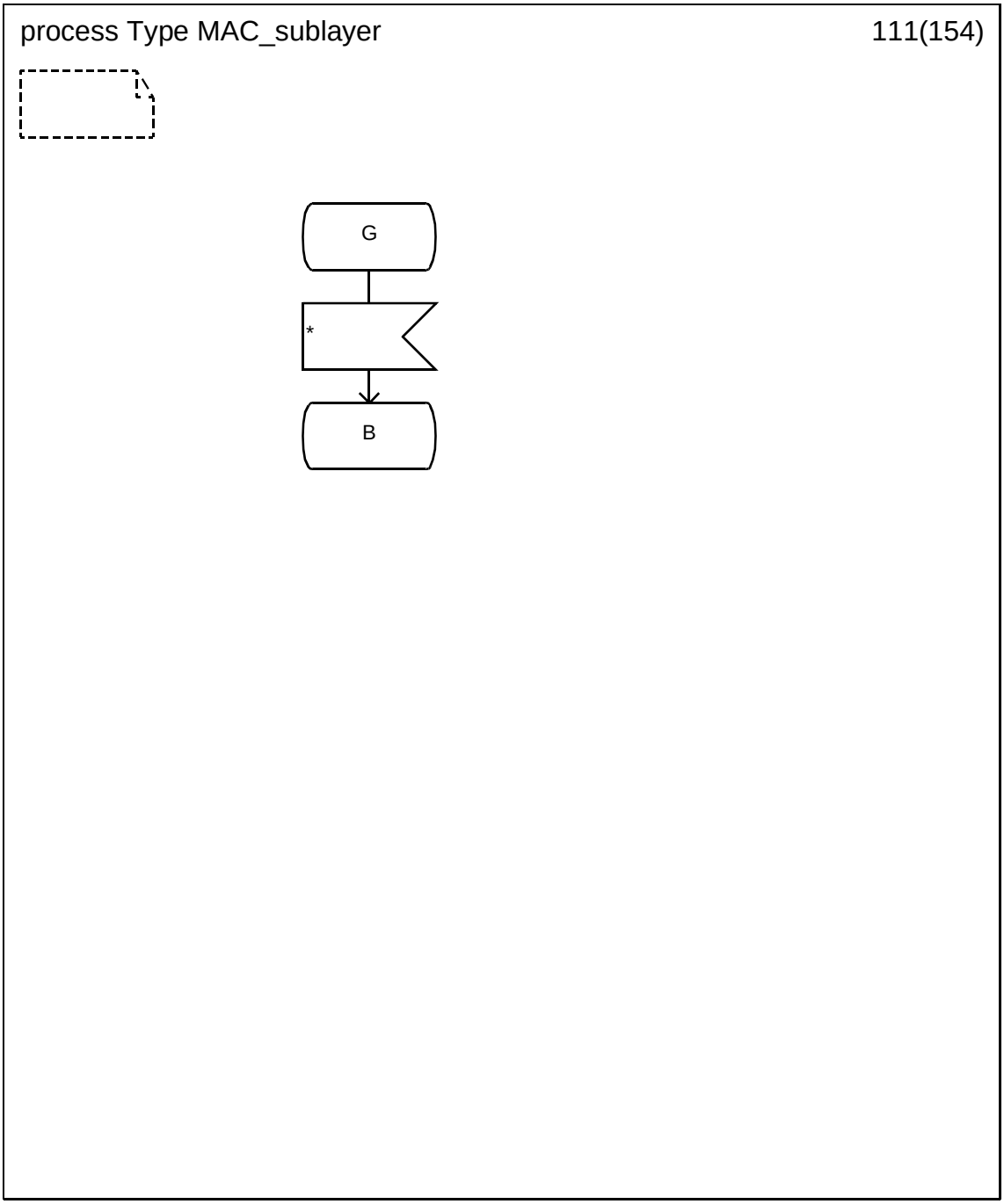


Copyright © 2003 IEEE. All rights reserved.

Authorized licensed use limited to: IEEE - Staff. Downloaded on October 28,2024 at 20:20:02 UTC from IEEE Xplore. Restrictions apply.

INTEL-1011
U.S. Patent 8,219,129

### D.3.1.112 Process type MAC_sublayer (112)

.

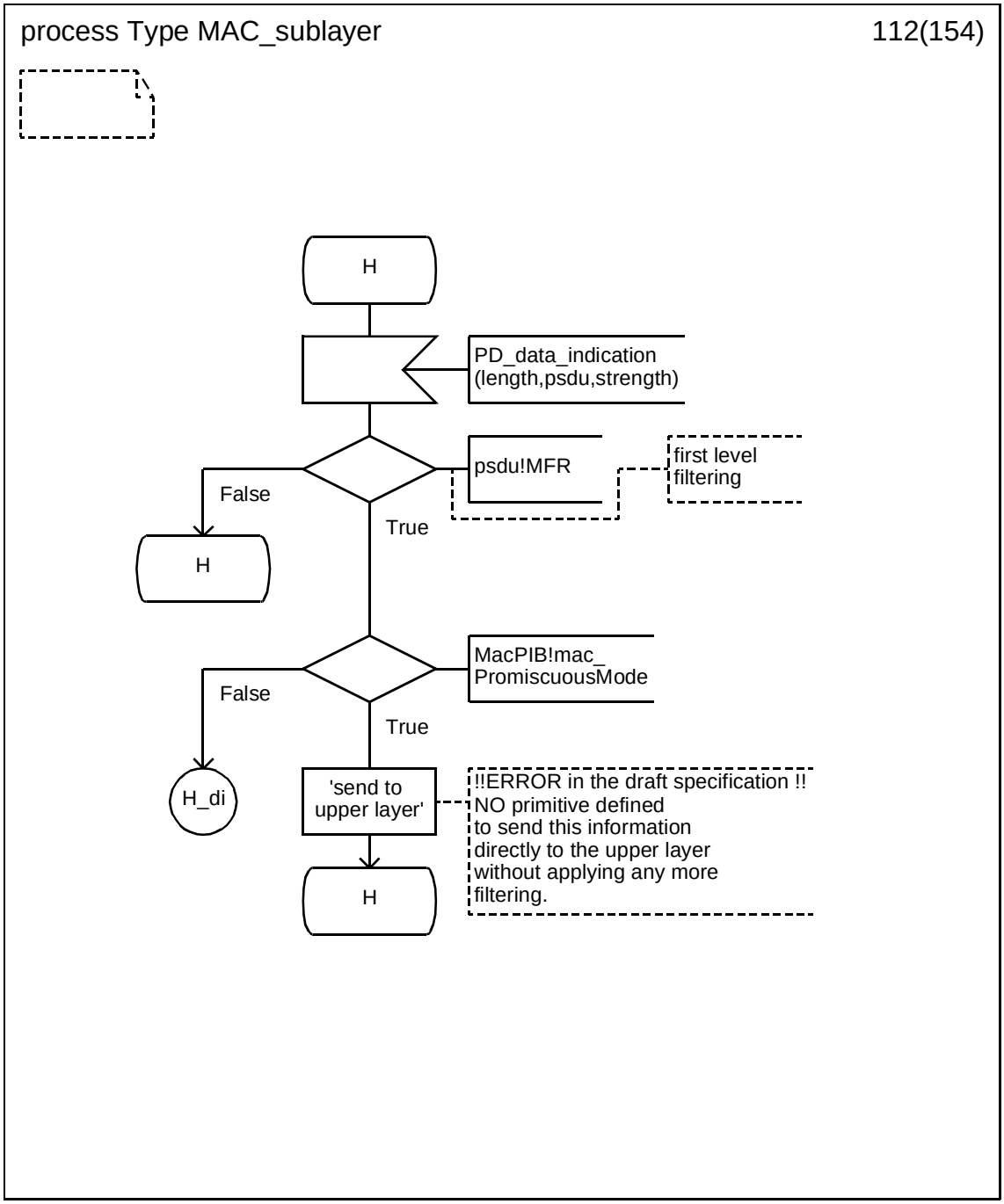



Copyright © 2003 IEEE. All rights reserved.
Authorized licensed use limited to: IEEE - Staff. Downloaded on October 28,2024 at 20:20:02 UTC from IEEE Xplore. Restrictions apply.

INTEL-1011
U.S. Patent 8,219,129

### D.3.1.113 Process type MAC_sublayer (113)

.

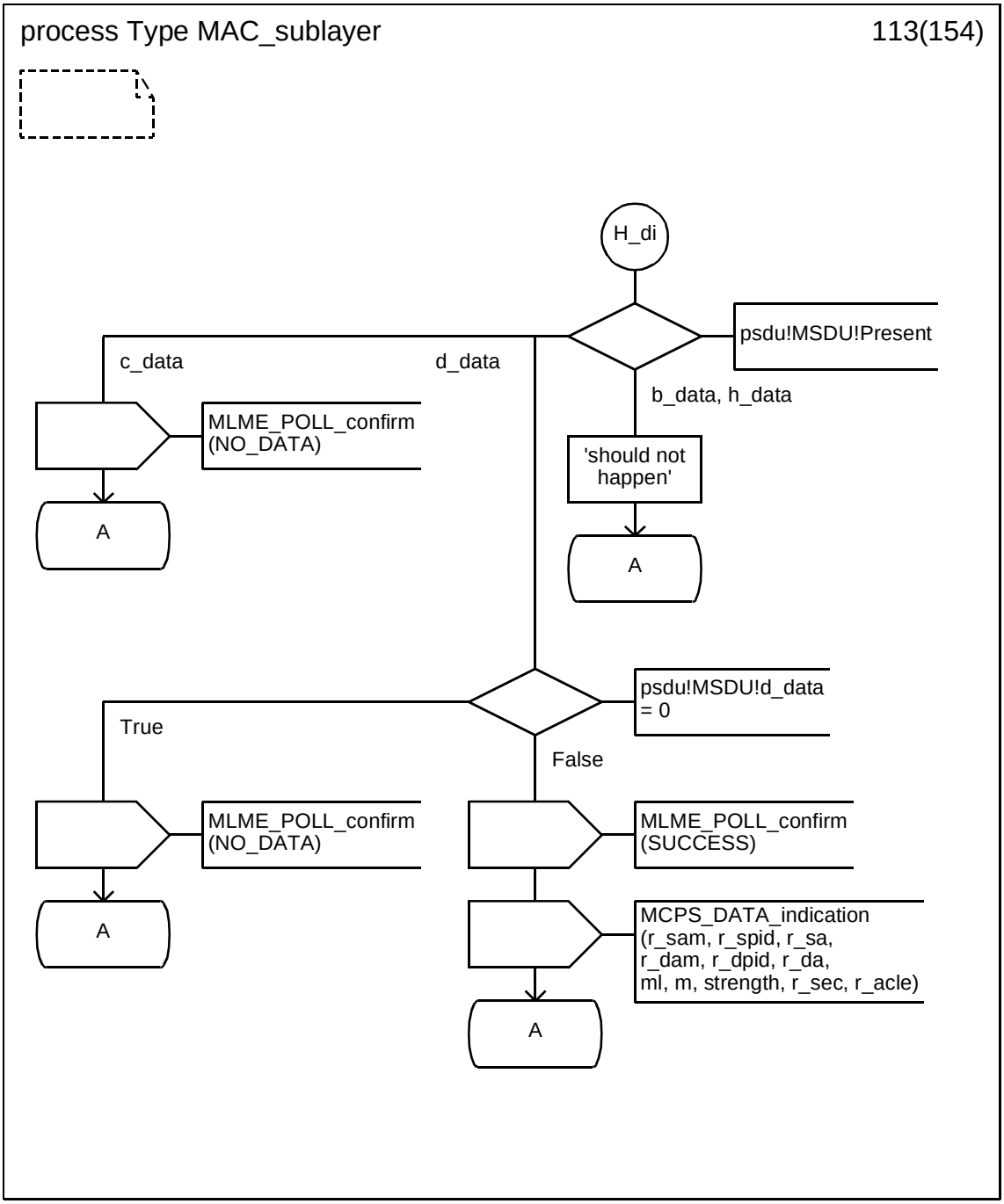


Copyright © 2003 IEEE. All rights reserved.

Authorized licensed use limited to: IEEE - Staff. Downloaded on October 28,2024 at 20:20:02 UTC from IEEE Xplore. Restrictions apply.

INTEL-1011
U.S. Patent 8,219,129

### D.3.1.114 Process type MAC_sublayer (114)

.

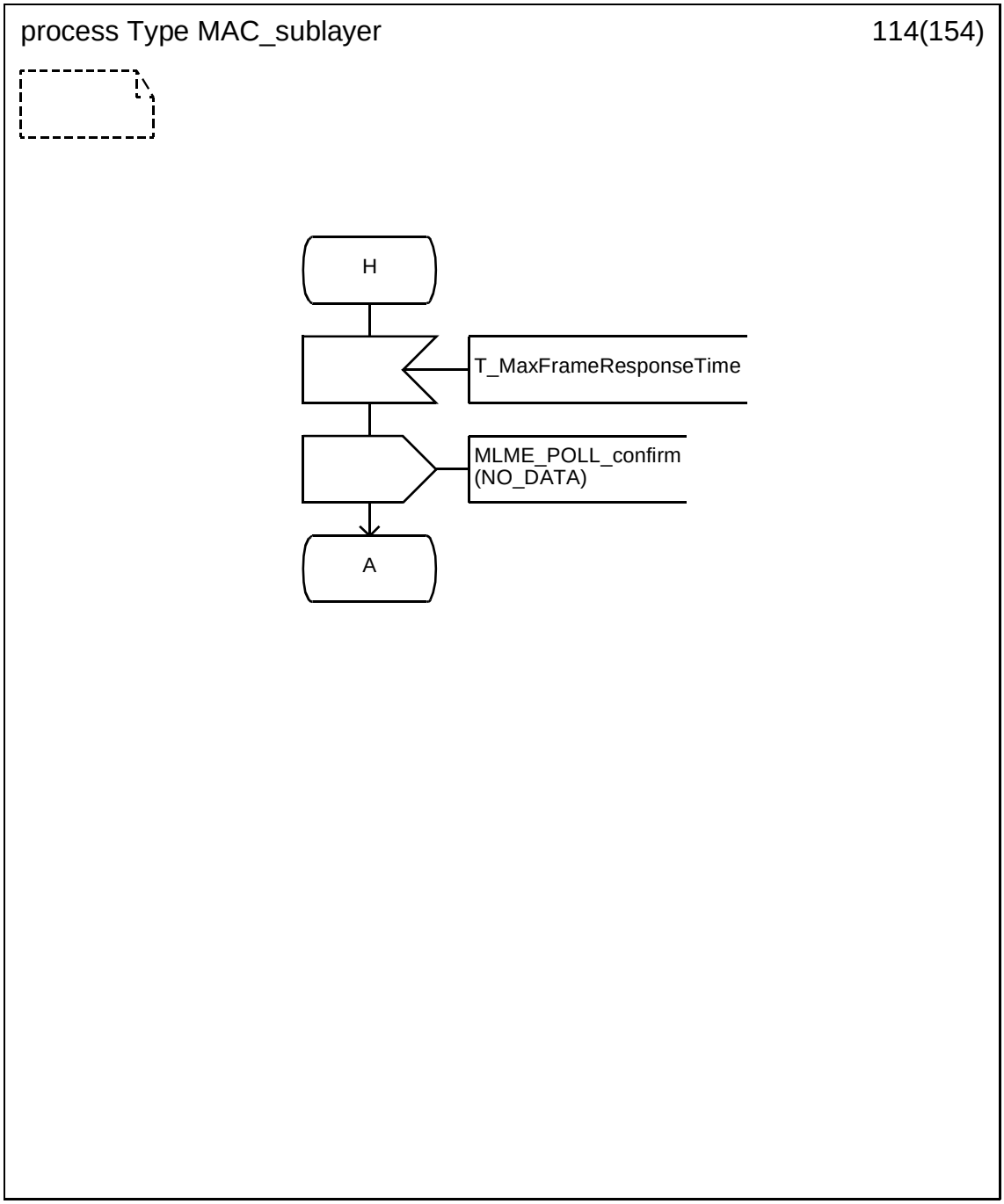



Copyright © 2003 IEEE. All rights reserved.
Authorized licensed use limited to: IEEE - Staff. Downloaded on October 28,2024 at 20:20:02 UTC from IEEE Xplore. Restrictions apply.

INTEL-1011
U.S. Patent 8,219,129

### D.3.1.115 Process type MAC_sublayer (115)

.

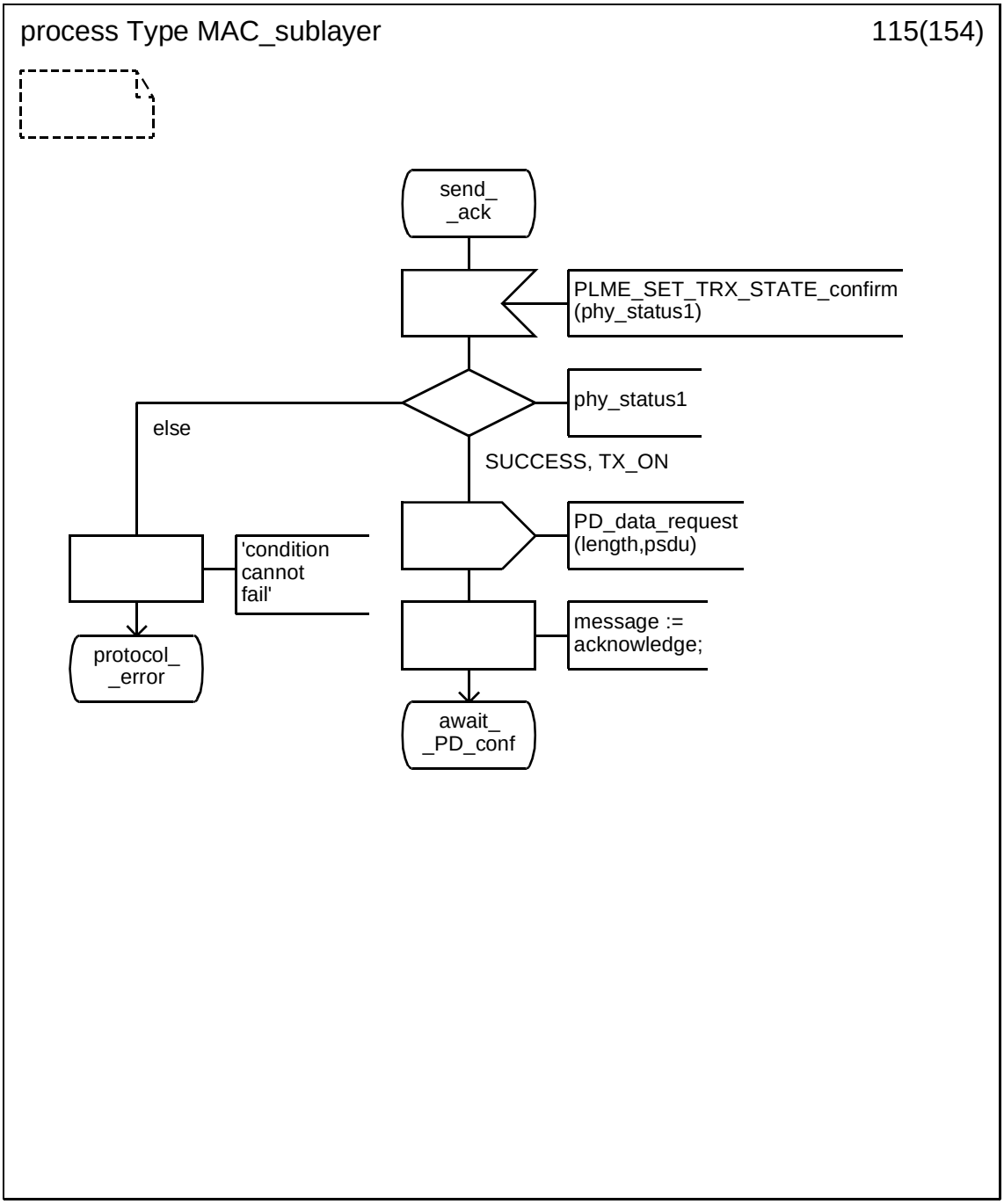


Copyright © 2003 IEEE. All rights reserved.

Authorized licensed use limited to: IEEE - Staff. Downloaded on October 28,2024 at 20:20:02 UTC from IEEE Xplore. Restrictions apply.

INTEL-1011
U.S. Patent 8,219,129

### D.3.1.116 Process type MAC_sublayer (116)

.

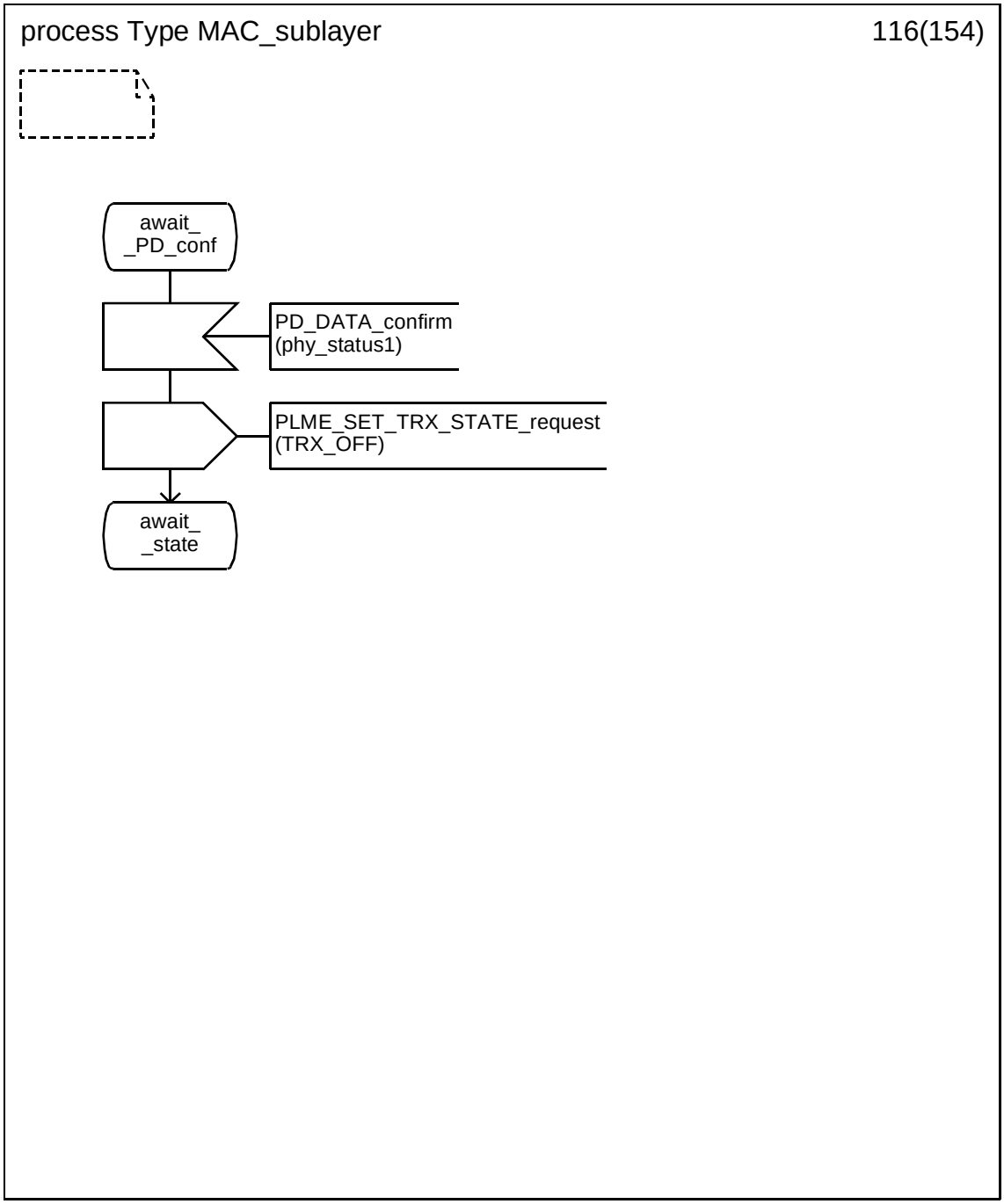



Copyright © 2003 IEEE. All rights reserved.
Authorized licensed use limited to: IEEE - Staff. Downloaded on October 28,2024 at 20:20:02 UTC from IEEE Xplore. Restrictions apply.

INTEL-1011
U.S. Patent 8,219,129

### D.3.1.117 Process type MAC_sublayer (117)

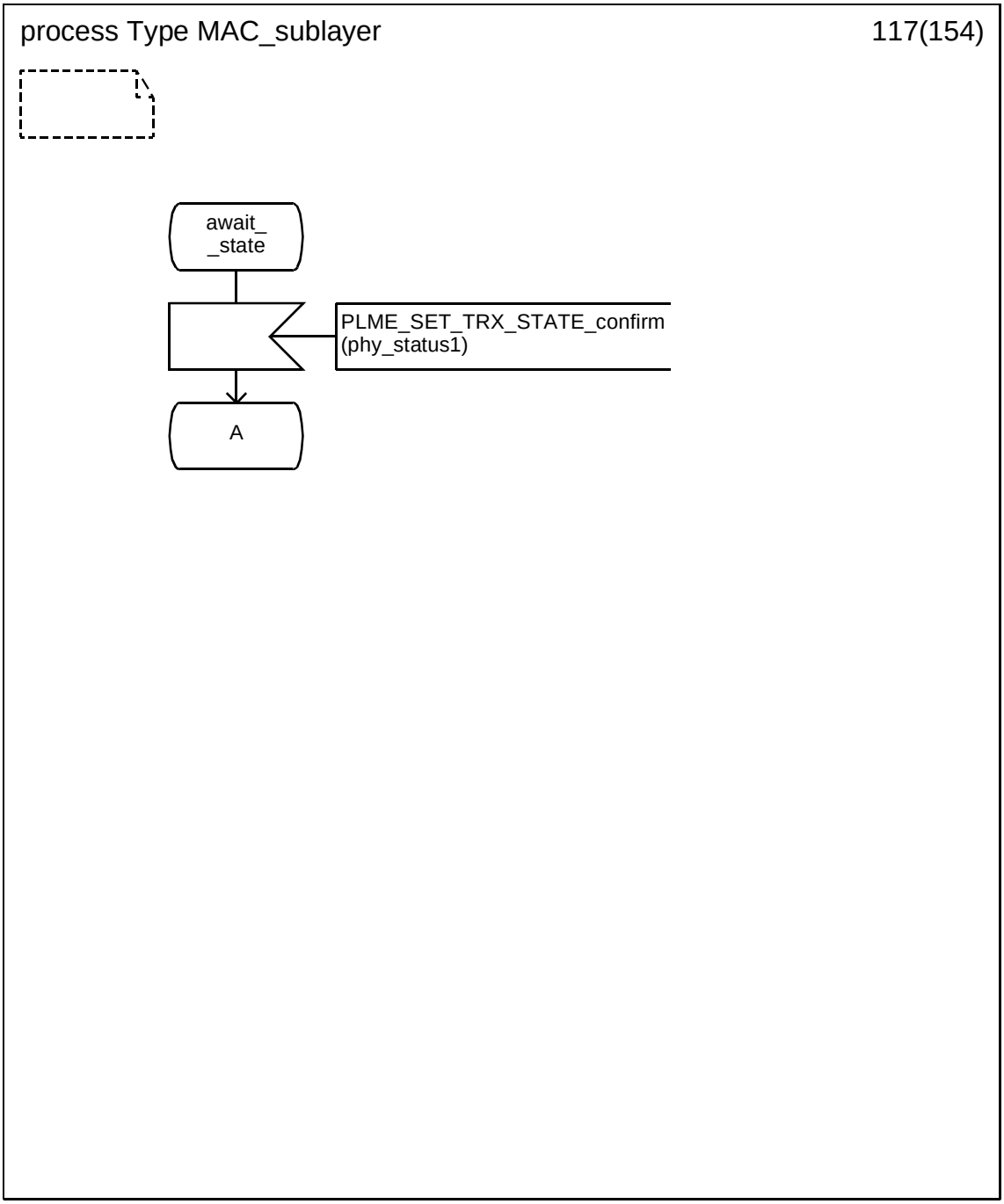


Copyright © 2003 IEEE. All rights reserved.

Authorized licensed use limited to: IEEE - Staff. Downloaded on October 28,2024 at 20:20:02 UTC from IEEE Xplore. Restrictions apply.

INTEL-1011
U.S. Patent 8,219,129

### D.3.1.118 Process type MAC_sublayer (118)

.

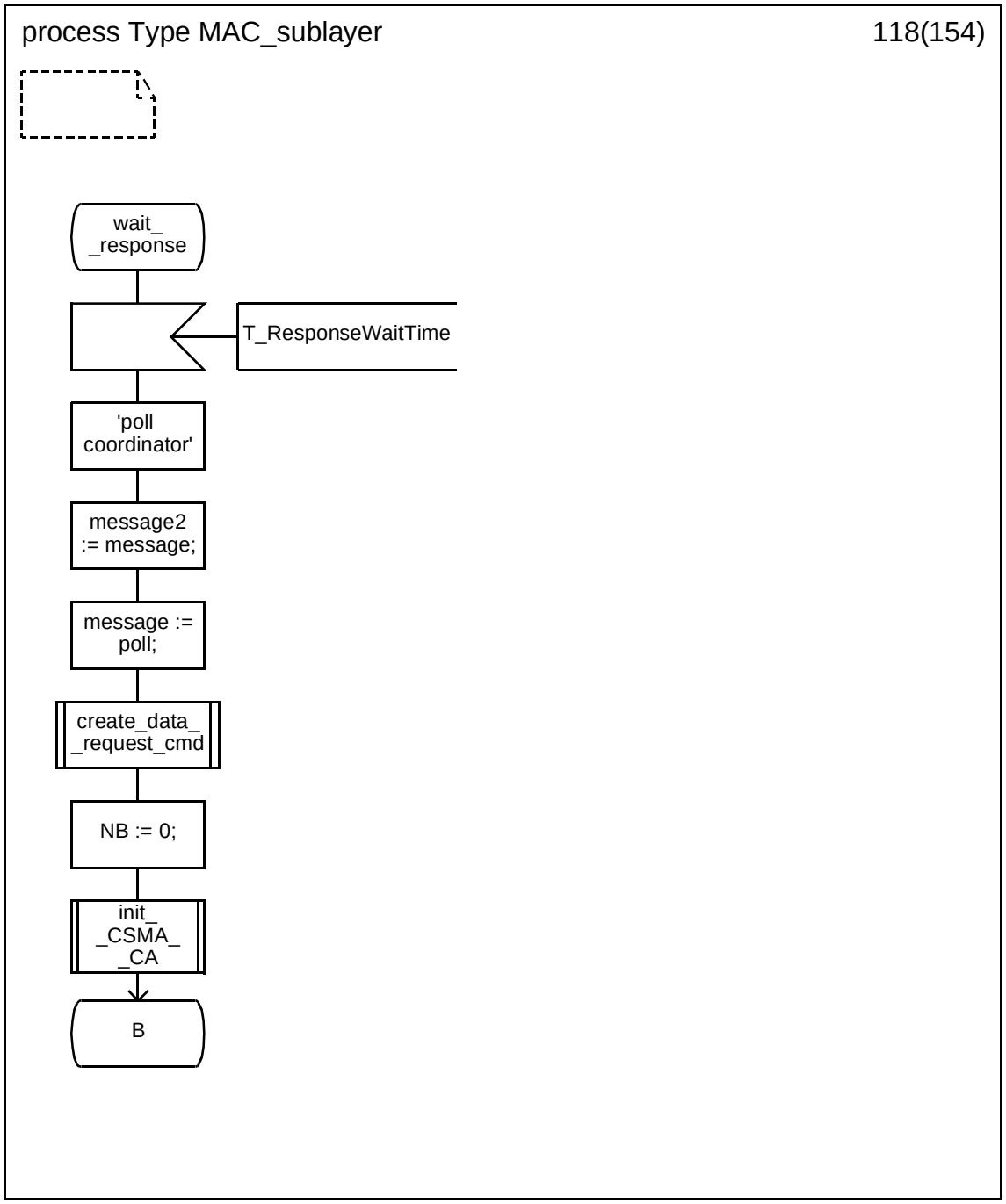



Copyright © 2003 IEEE. All rights reserved.
Authorized licensed use limited to: IEEE - Staff. Downloaded on October 28,2024 at 20:20:02 UTC from IEEE Xplore. Restrictions apply.

INTEL-1011
U.S. Patent 8,219,129

### D.3.1.119 Process type MAC_sublayer (119)

.

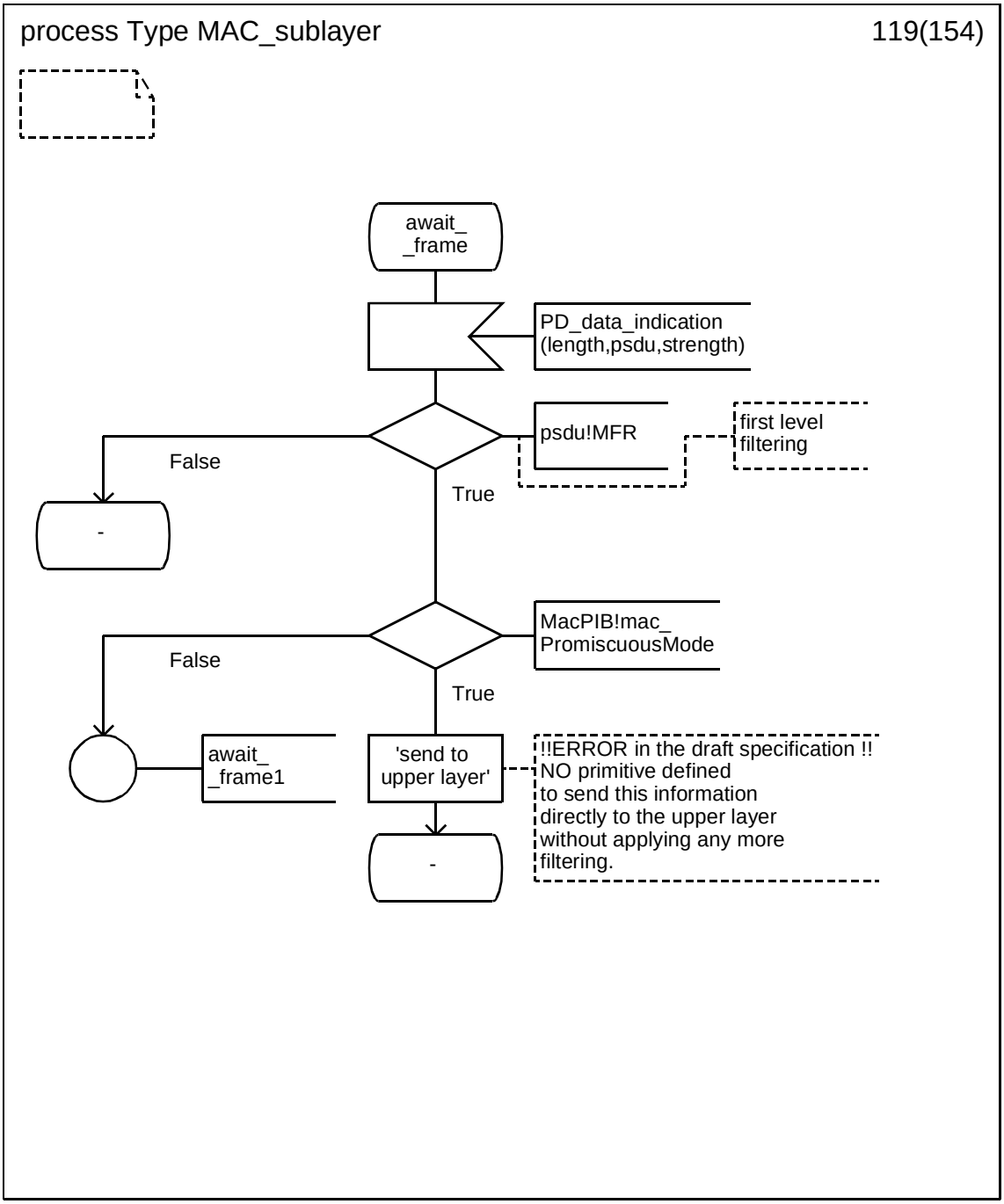


Copyright © 2003 IEEE. All rights reserved.

Authorized licensed use limited to: IEEE - Staff. Downloaded on October 28,2024 at 20:20:02 UTC from IEEE Xplore. Restrictions apply.

INTEL-1011
U.S. Patent 8,219,129

### D.3.1.120 Process type MAC_sublayer (120)

.

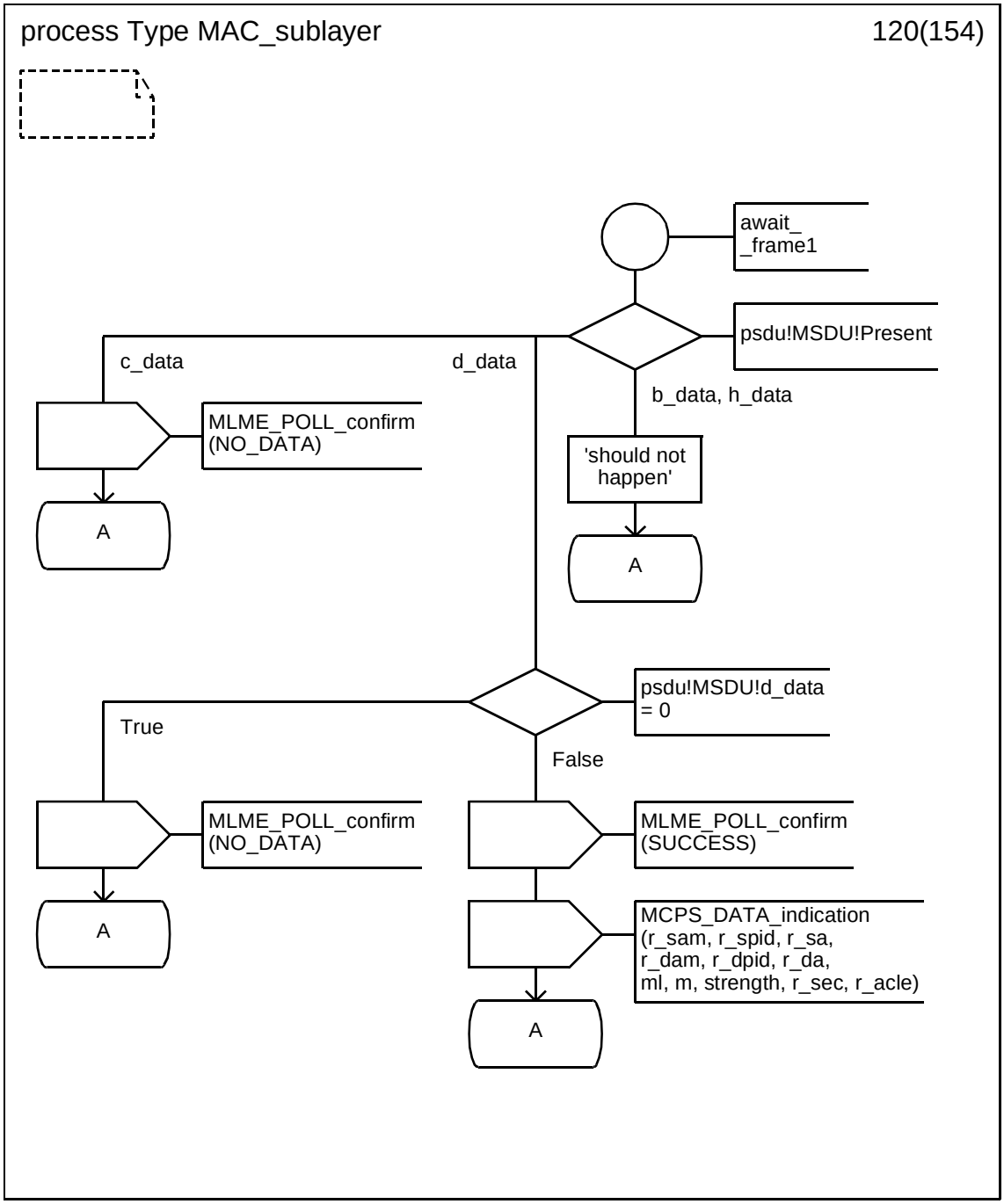



Copyright © 2003 IEEE. All rights reserved.
Authorized licensed use limited to: IEEE - Staff. Downloaded on October 28,2024 at 20:20:02 UTC from IEEE Xplore. Restrictions apply.

INTEL-1011
U.S. Patent 8,219,129

### D.3.1.121 Process type MAC_sublayer (121)

.

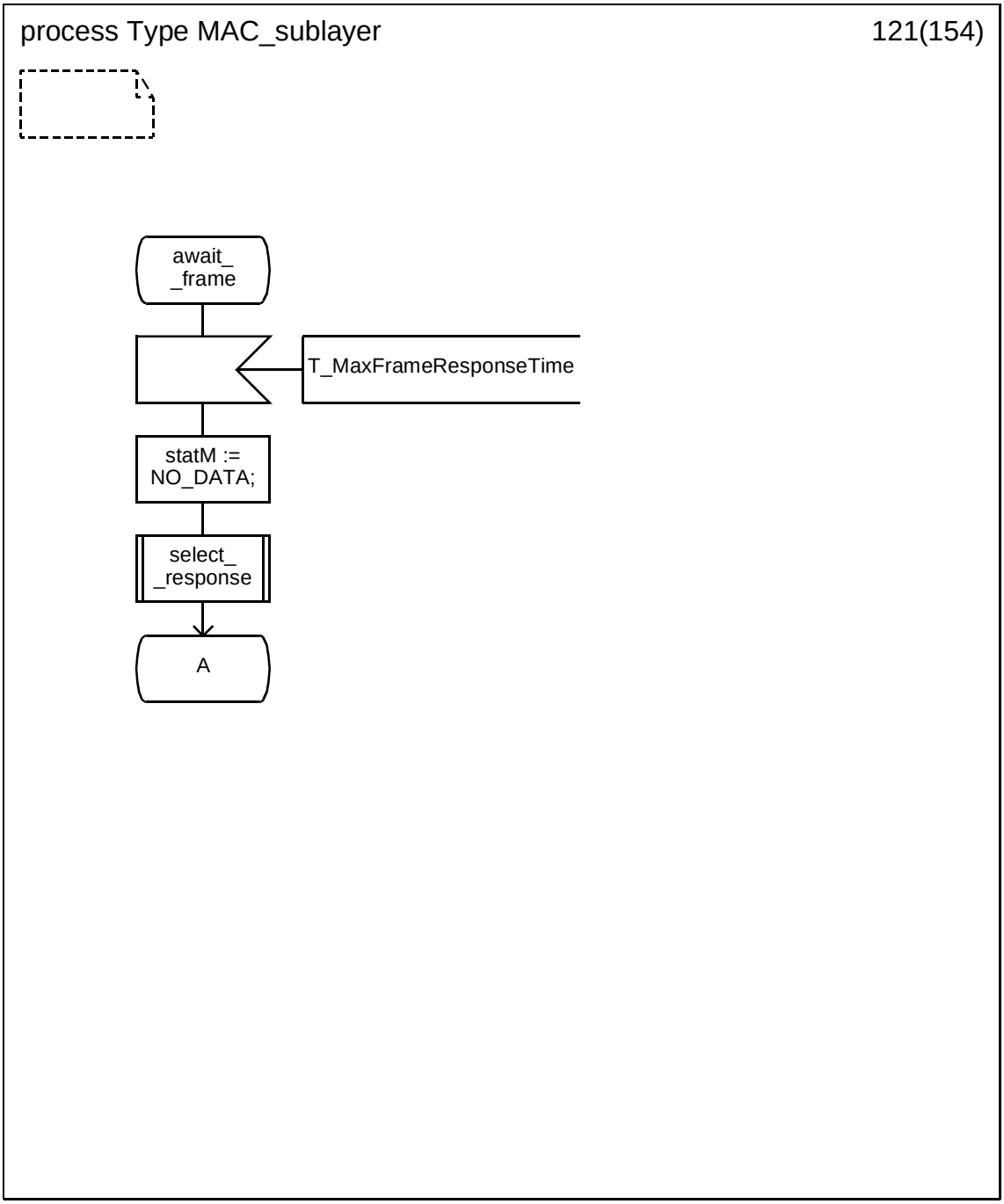


Copyright © 2003 IEEE. All rights reserved.

Authorized licensed use limited to: IEEE - Staff. Downloaded on October 28,2024 at 20:20:02 UTC from IEEE Xplore. Restrictions apply.

INTEL-1011
U.S. Patent 8,219,129

### D.3.1.122 Process type MAC_sublayer (122)

.

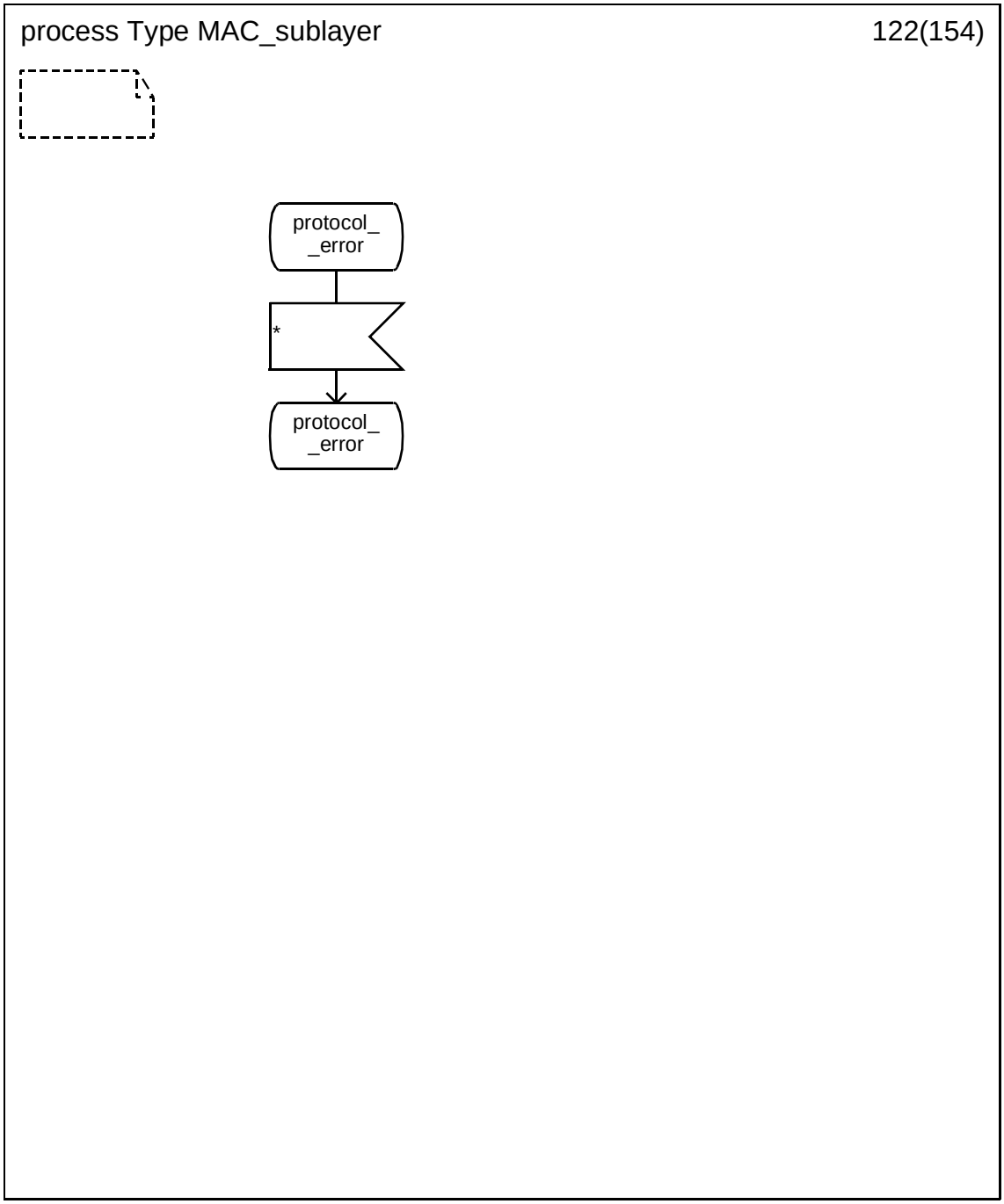



Copyright © 2003 IEEE. All rights reserved.
Authorized licensed use limited to: IEEE - Staff. Downloaded on October 28,2024 at 20:20:02 UTC from IEEE Xplore. Restrictions apply.

INTEL-1011
U.S. Patent 8,219,129

### D.3.1.123 Process type MAC_sublayer (123)

.

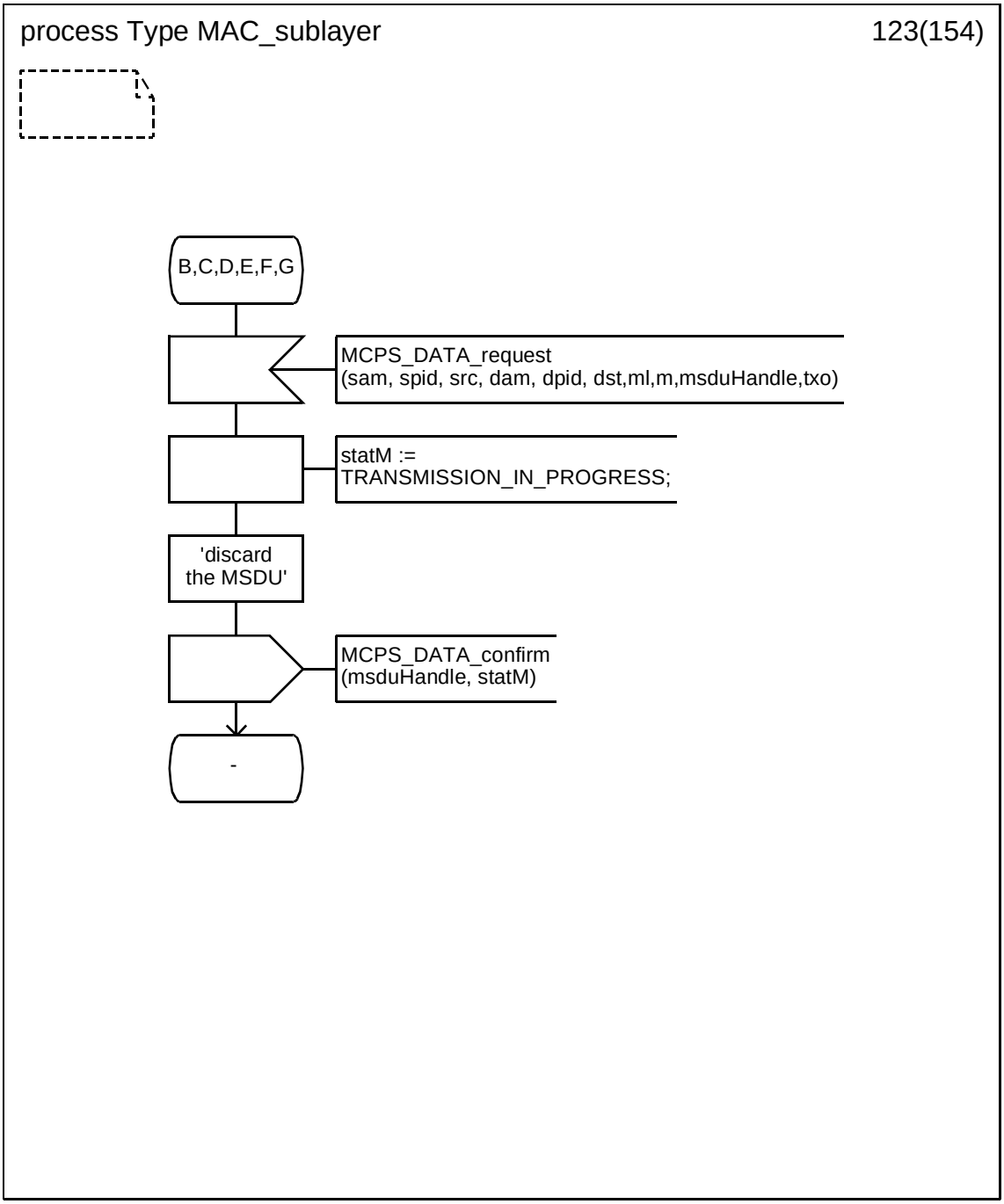


Copyright © 2003 IEEE. All rights reserved.

Authorized licensed use limited to: IEEE - Staff. Downloaded on October 28,2024 at 20:20:02 UTC from IEEE Xplore. Restrictions apply.

INTEL-1011
U.S. Patent 8,219,129

### D.3.1.124 Process type MAC_sublayer (124)

.

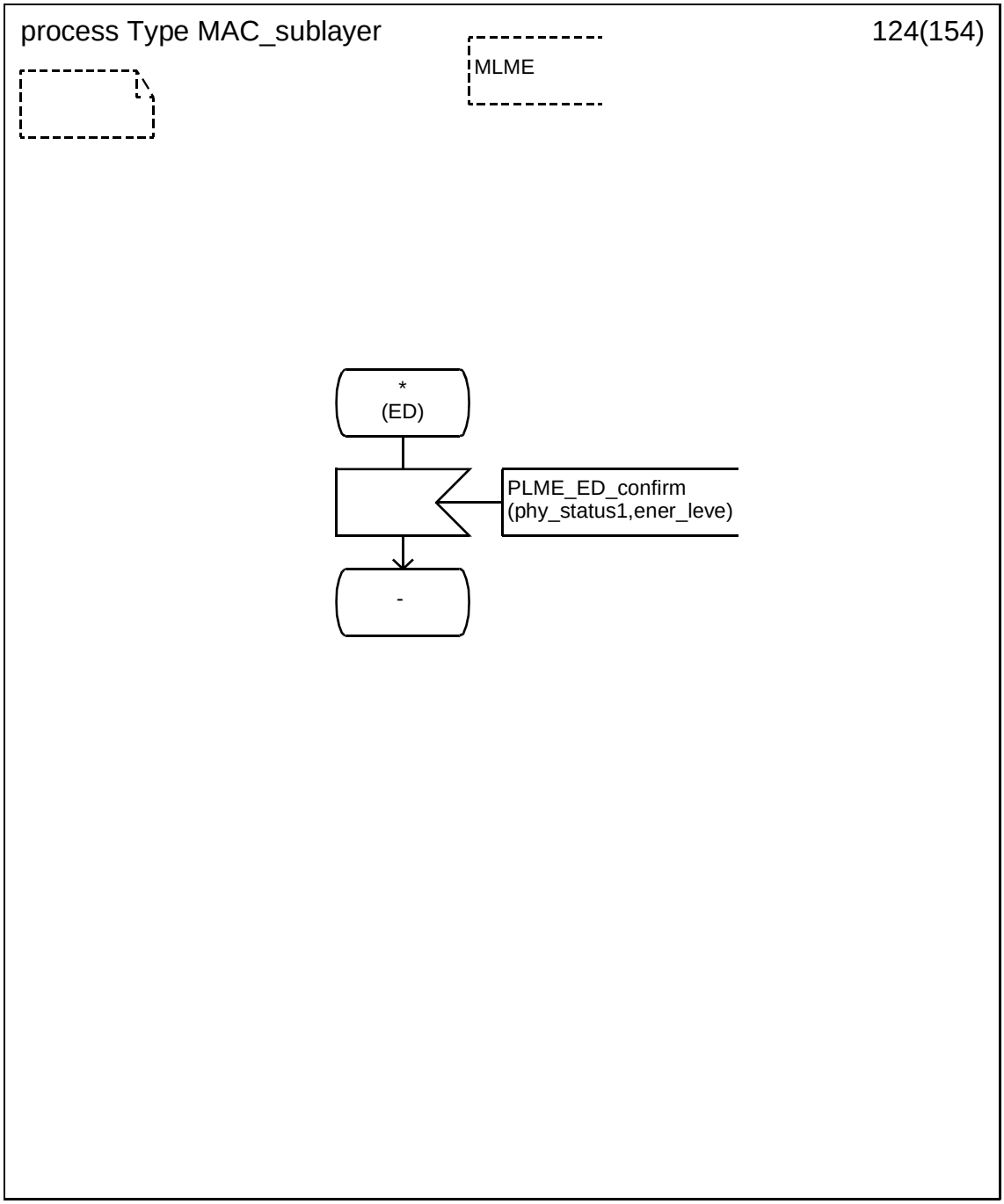



Copyright © 2003 IEEE. All rights reserved.
Authorized licensed use limited to: IEEE - Staff. Downloaded on October 28,2024 at 20:20:02 UTC from IEEE Xplore. Restrictions apply.

INTEL-1011
U.S. Patent 8,219,129

### D.3.1.125 Process type MAC_sublayer (125)

.

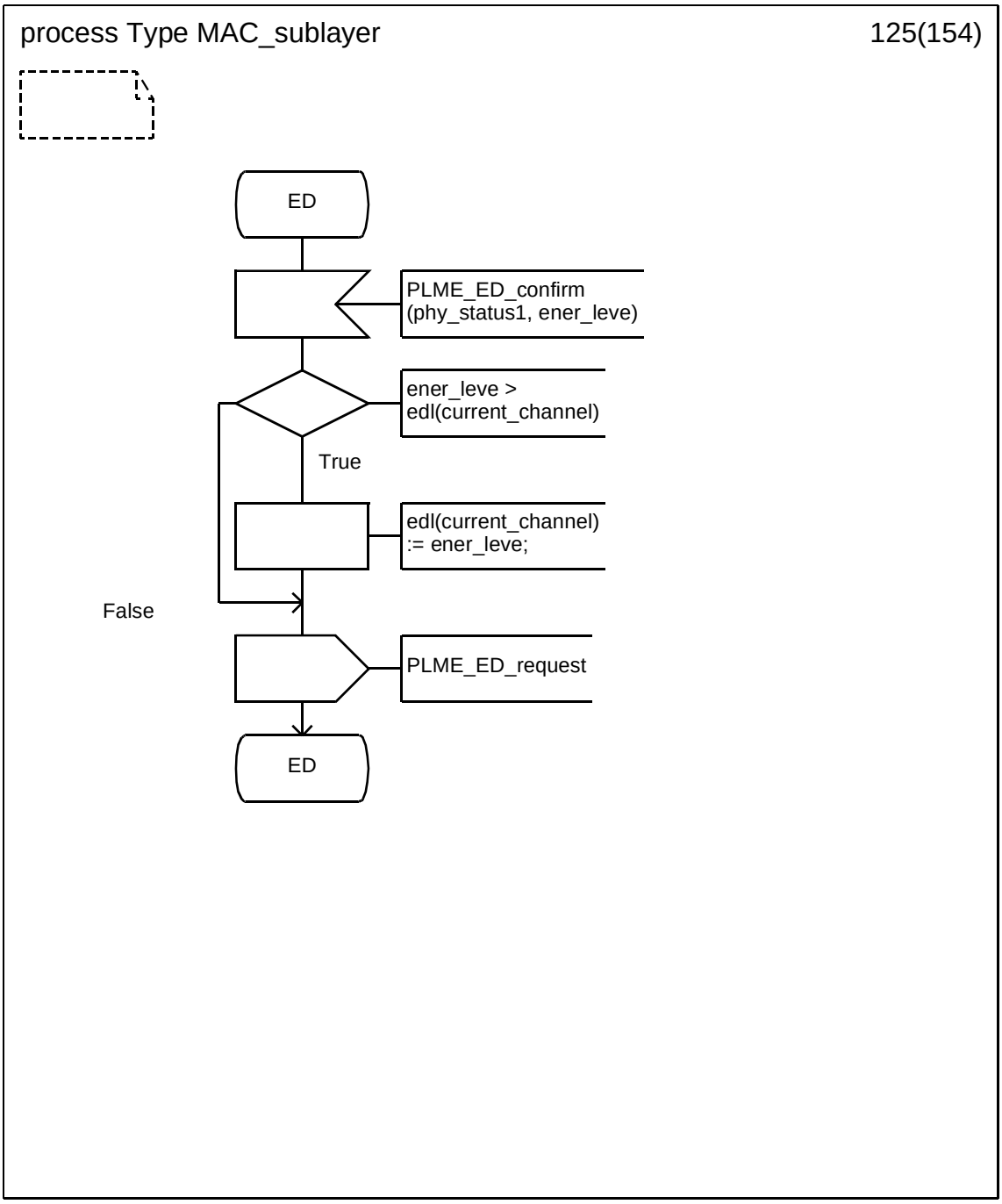


Copyright © 2003 IEEE. All rights reserved.

Authorized licensed use limited to: IEEE - Staff. Downloaded on October 28,2024 at 20:20:02 UTC from IEEE Xplore. Restrictions apply.

INTEL-1011
U.S. Patent 8,219,129

### D.3.1.126 Process type MAC_sublayer (126)

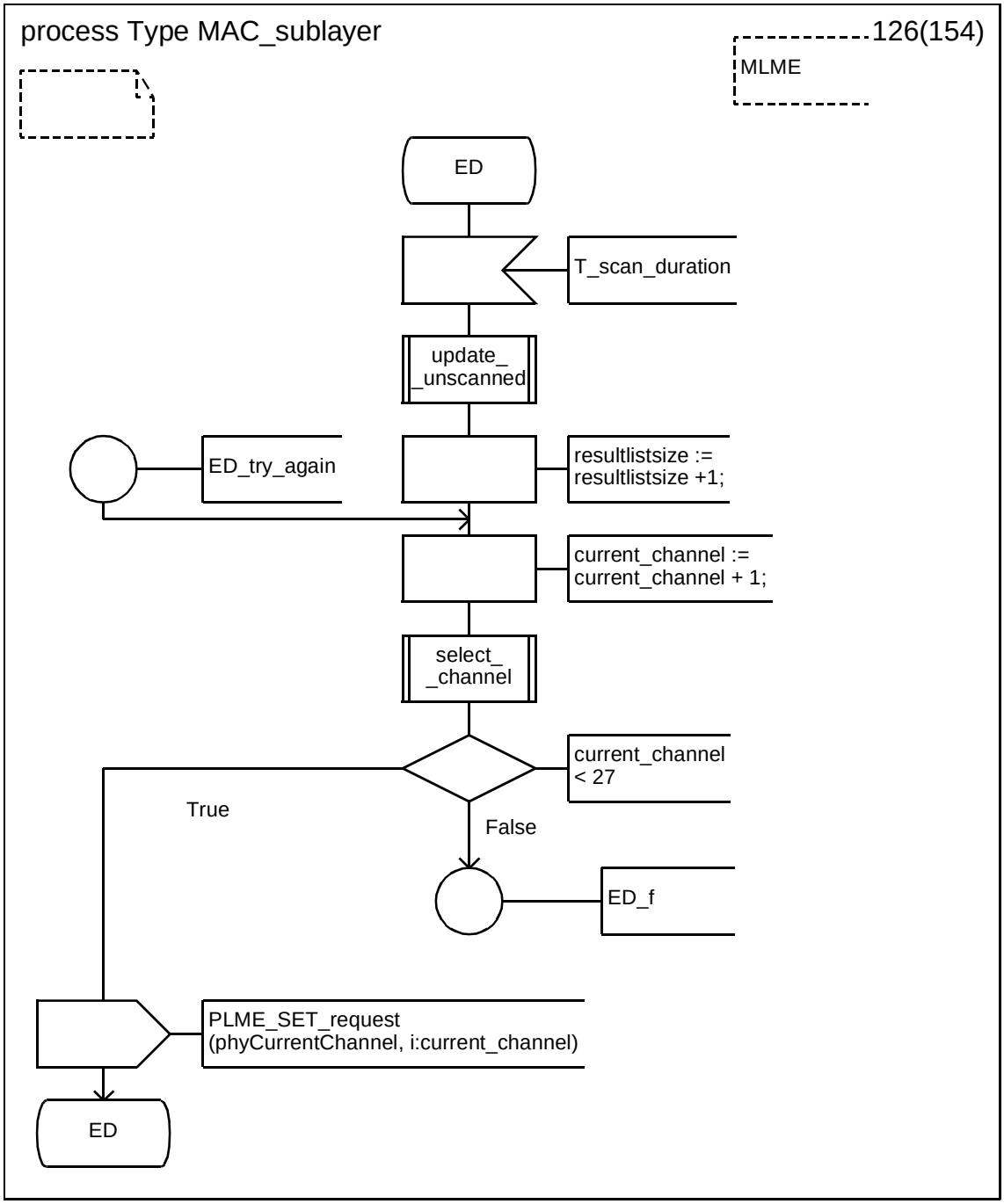



Copyright © 2003 IEEE. All rights reserved.
Authorized licensed use limited to: IEEE - Staff. Downloaded on October 28,2024 at 20:20:02 UTC from IEEE Xplore. Restrictions apply.

INTEL-1011
U.S. Patent 8,219,129

### D.3.1.127 Process type MAC_sublayer (127)

.

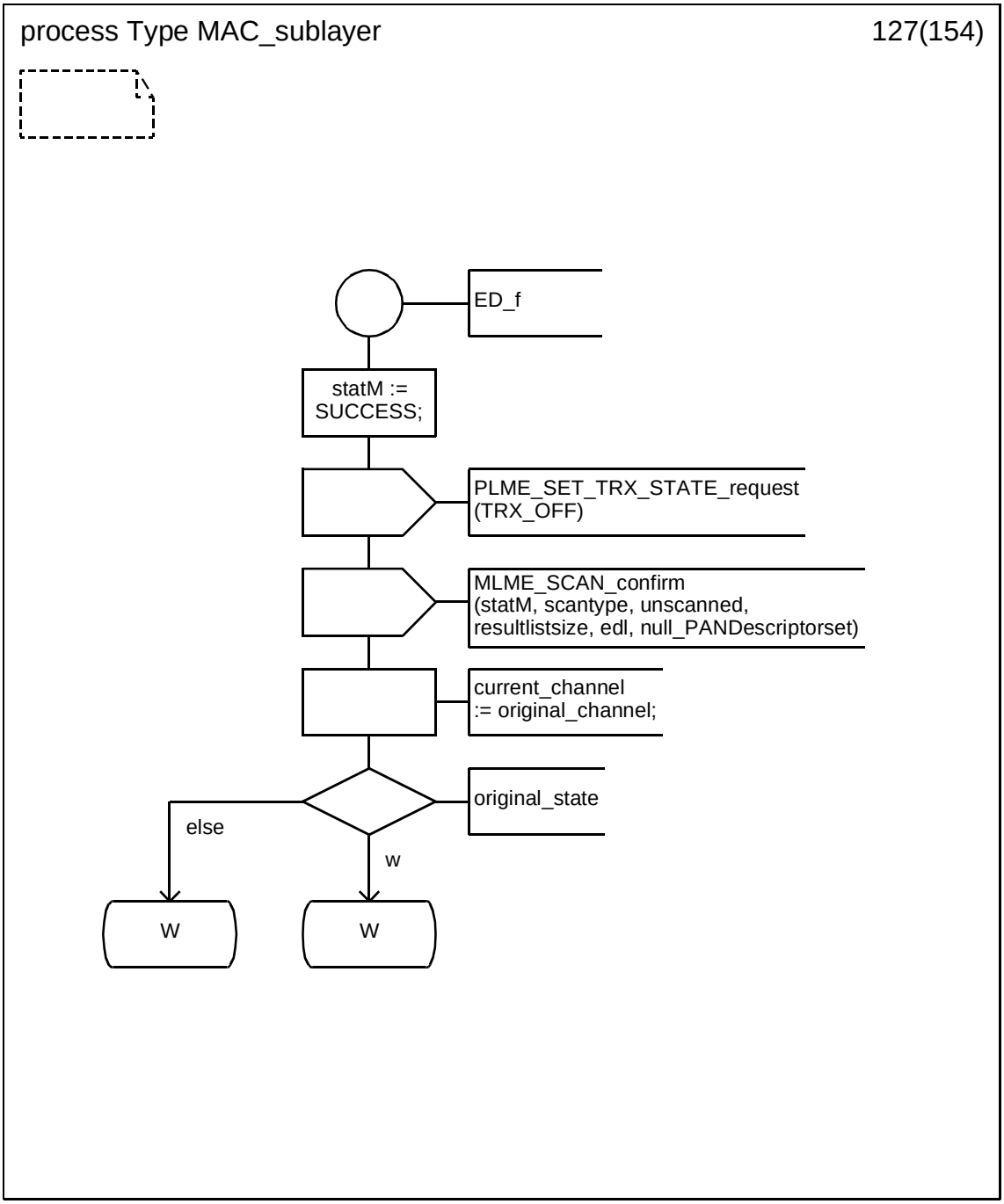


Copyright © 2003 IEEE. All rights reserved.

Authorized licensed use limited to: IEEE - Staff. Downloaded on October 28,2024 at 20:20:02 UTC from IEEE Xplore. Restrictions apply.

INTEL-1011
U.S. Patent 8,219,129

### D.3.1.128 Process type MAC_sublayer (128)

.

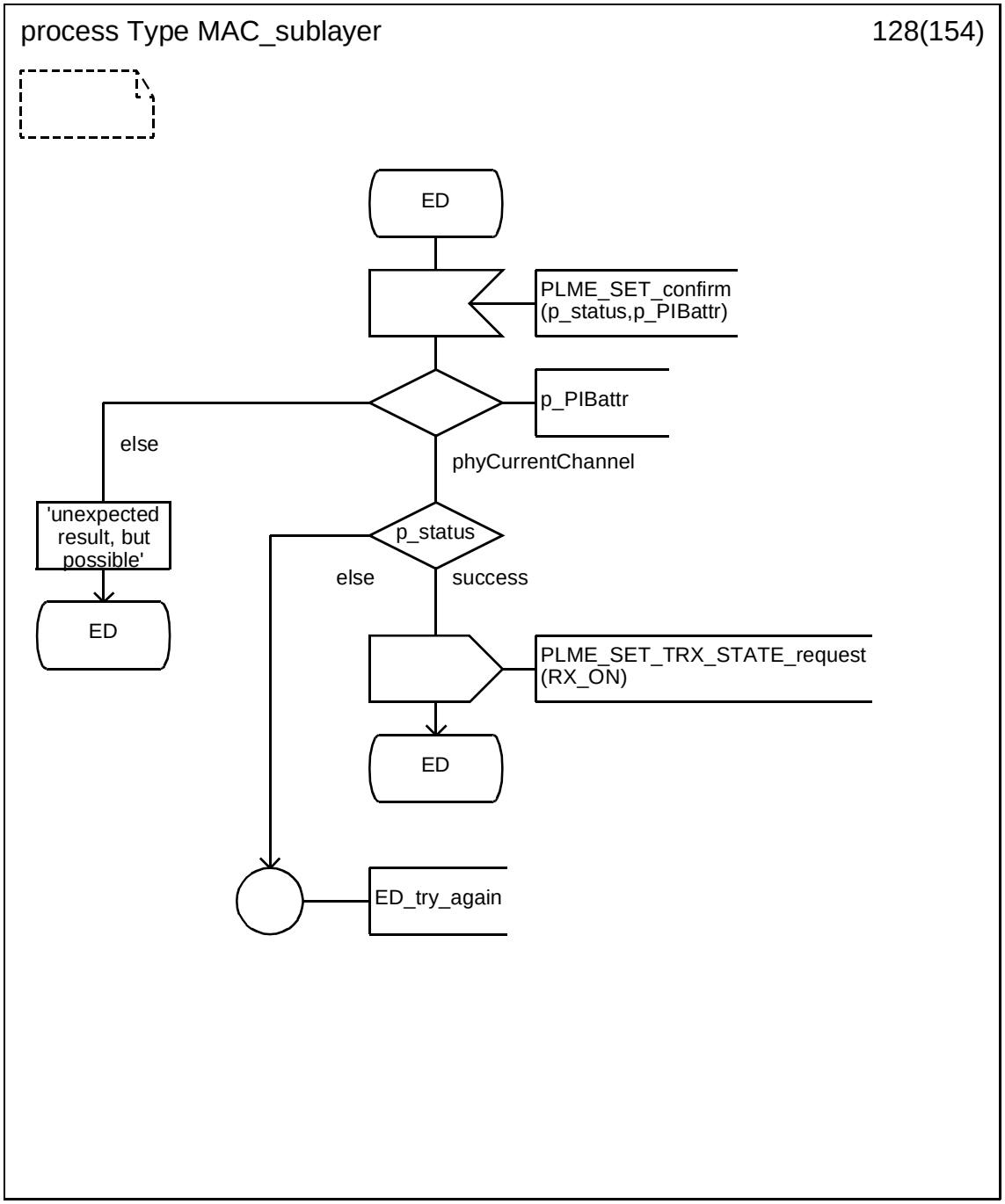



Copyright © 2003 IEEE. All rights reserved.
Authorized licensed use limited to: IEEE - Staff. Downloaded on October 28,2024 at 20:20:02 UTC from IEEE Xplore. Restrictions apply.

INTEL-1011
U.S. Patent 8,219,129

### D.3.1.129 Process type MAC_sublayer (129)

.

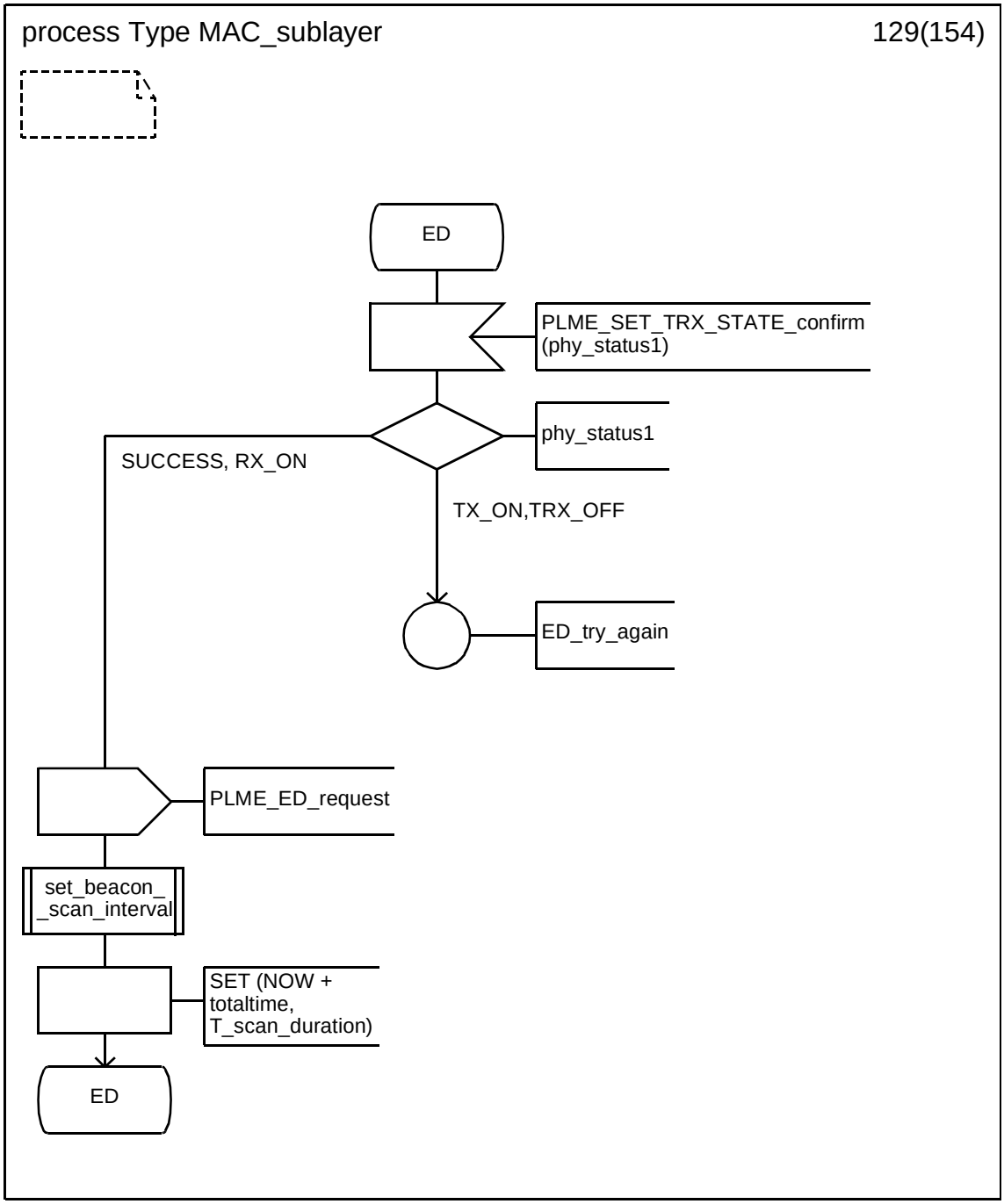


Copyright © 2003 IEEE. All rights reserved.

Authorized licensed use limited to: IEEE - Staff. Downloaded on October 28,2024 at 20:20:02 UTC from IEEE Xplore. Restrictions apply.

INTEL-1011
U.S. Patent 8,219,129

### D.3.1.130 Process type MAC_sublayer (130)

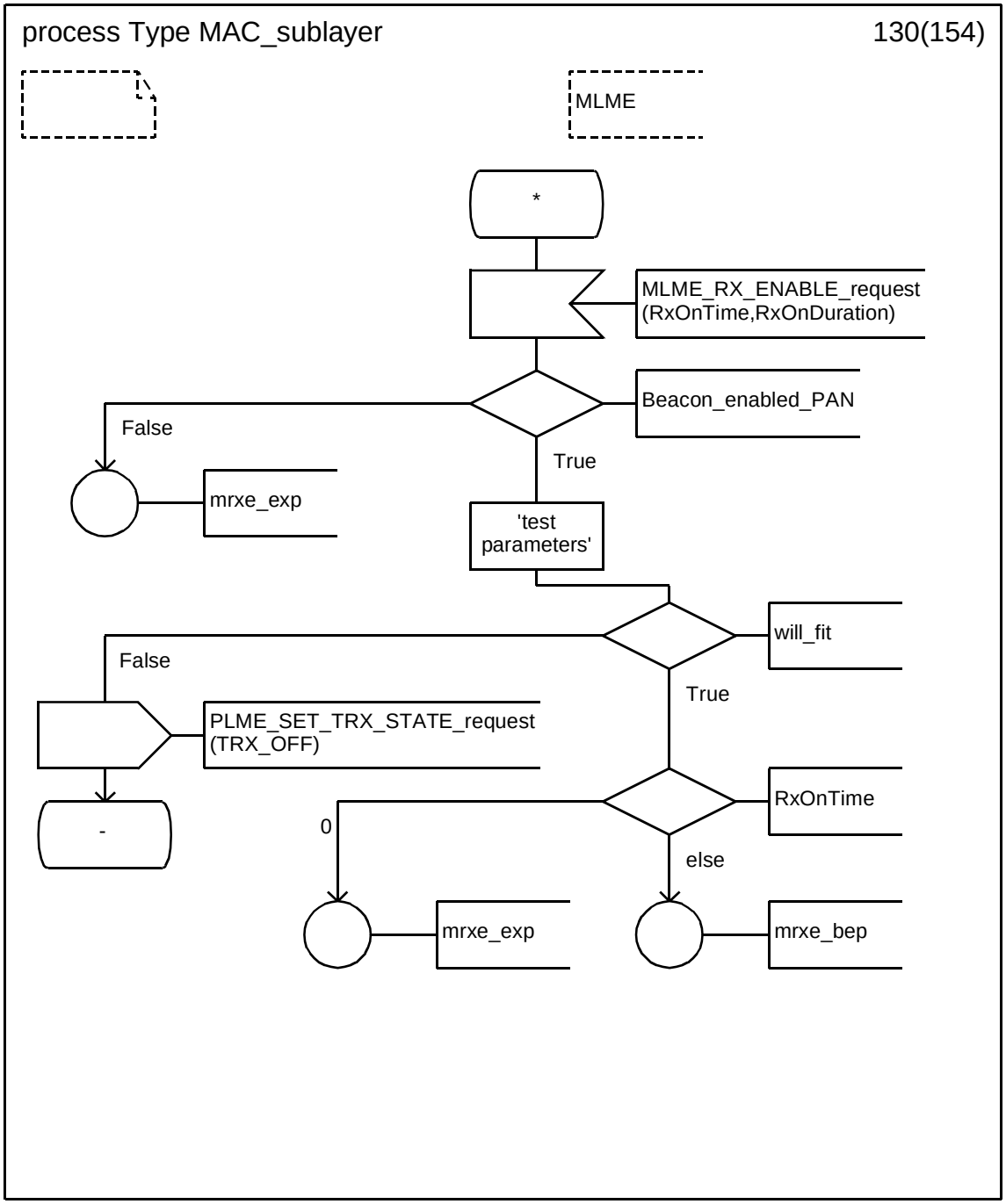



Copyright © 2003 IEEE. All rights reserved.
Authorized licensed use limited to: IEEE - Staff. Downloaded on October 28,2024 at 20:20:02 UTC from IEEE Xplore. Restrictions apply.

INTEL-1011
U.S. Patent 8,219,129

### D.3.1.131 Process type MAC_sublayer (131)

.

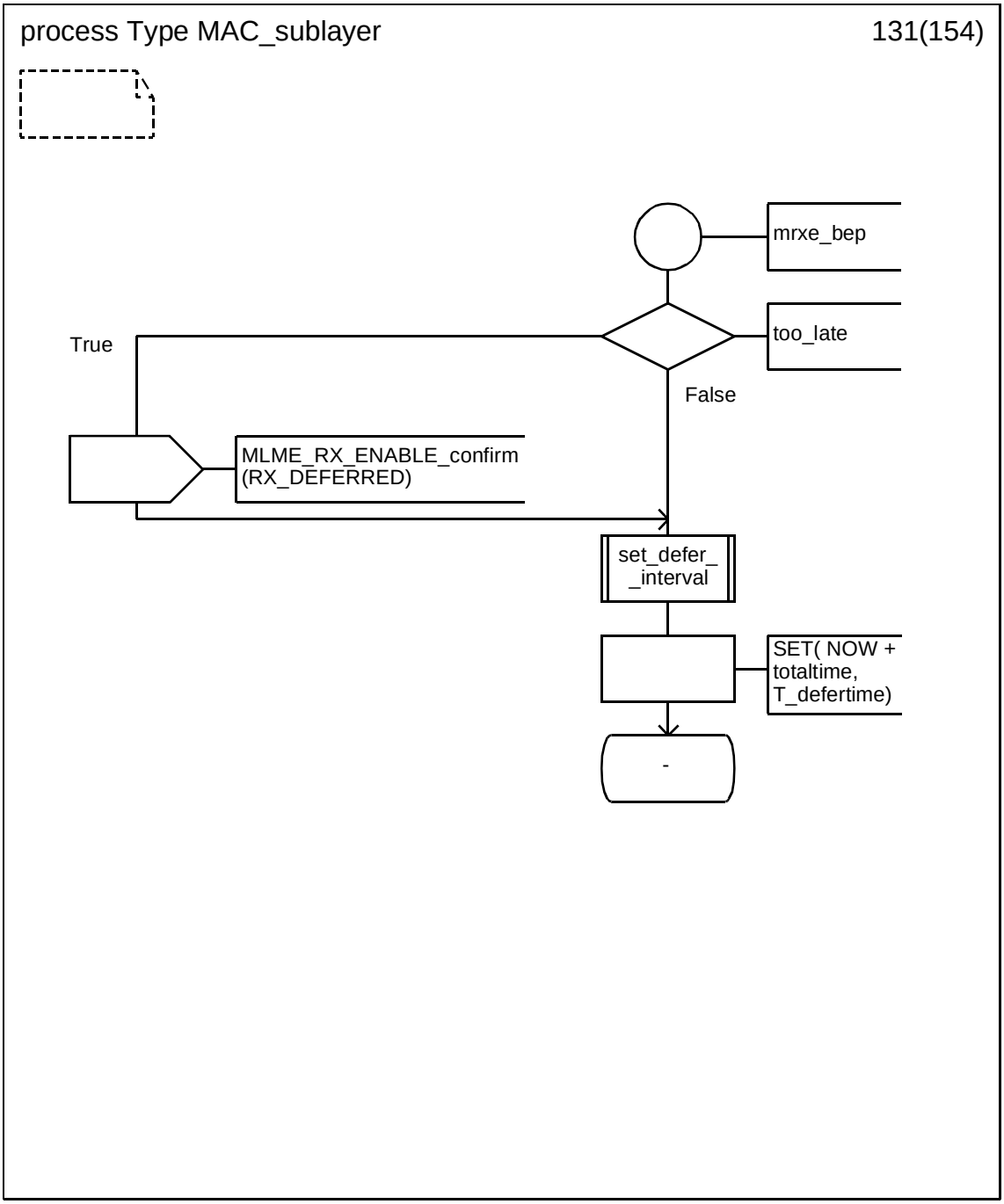


Copyright © 2003 IEEE. All rights reserved.

Authorized licensed use limited to: IEEE - Staff. Downloaded on October 28,2024 at 20:20:02 UTC from IEEE Xplore. Restrictions apply.

INTEL-1011
U.S. Patent 8,219,129

### D.3.1.132 Process type MAC_sublayer (132)

.

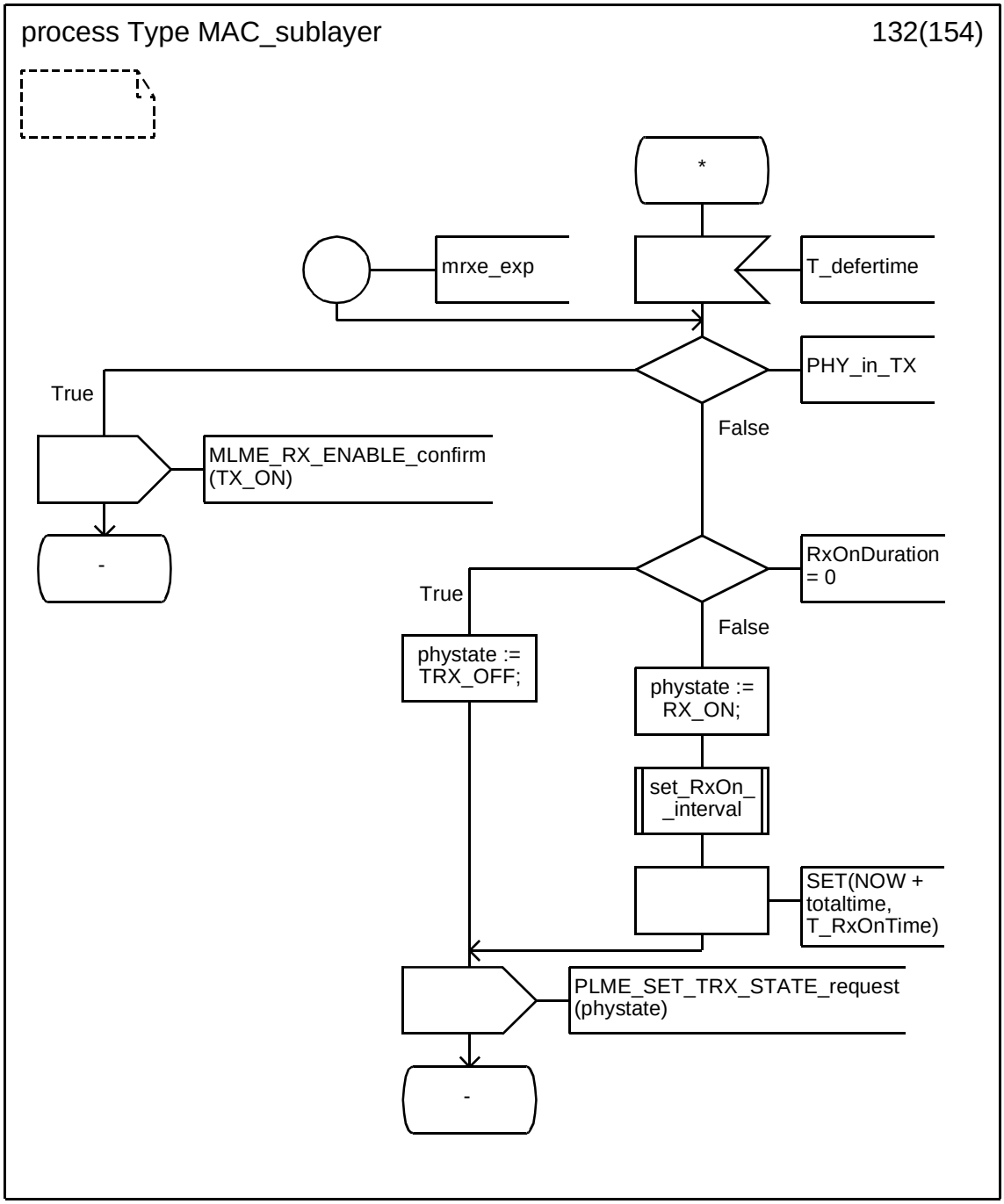



Copyright © 2003 IEEE. All rights reserved.
Authorized licensed use limited to: IEEE - Staff. Downloaded on October 28,2024 at 20:20:02 UTC from IEEE Xplore. Restrictions apply.

INTEL-1011
U.S. Patent 8,219,129

### D.3.1.133 Process type MAC_sublayer (133)

.

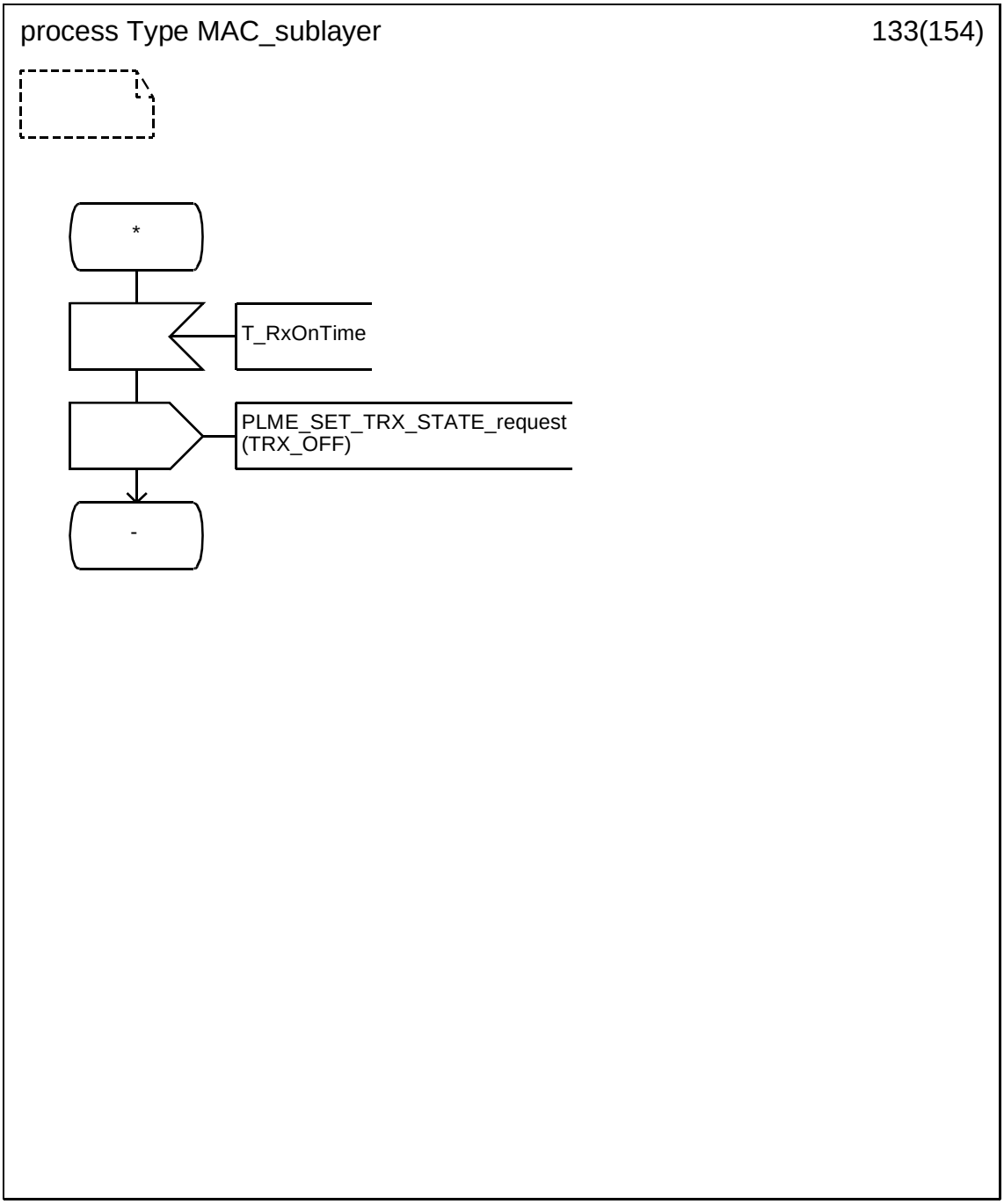


Copyright © 2003 IEEE. All rights reserved.

Authorized licensed use limited to: IEEE - Staff. Downloaded on October 28,2024 at 20:20:02 UTC from IEEE Xplore. Restrictions apply.

INTEL-1011
U.S. Patent 8,219,129

### D.3.1.134 Process type MAC_sublayer (134)

.

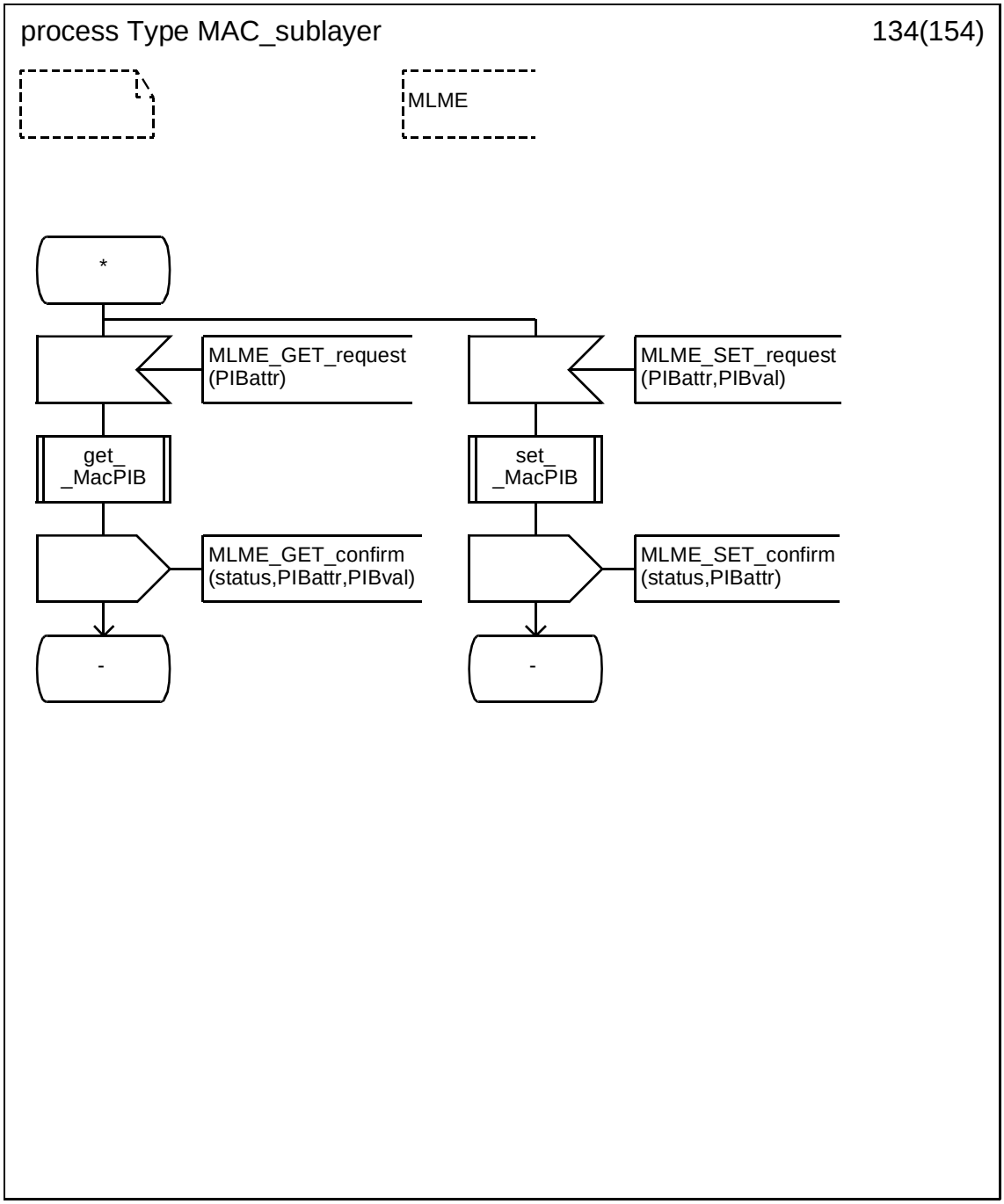



Copyright © 2003 IEEE. All rights reserved.
Authorized licensed use limited to: IEEE - Staff. Downloaded on October 28,2024 at 20:20:02 UTC from IEEE Xplore. Restrictions apply.

INTEL-1011
U.S. Patent 8,219,129

### D.3.1.135 Process type MAC_sublayer (135)

.

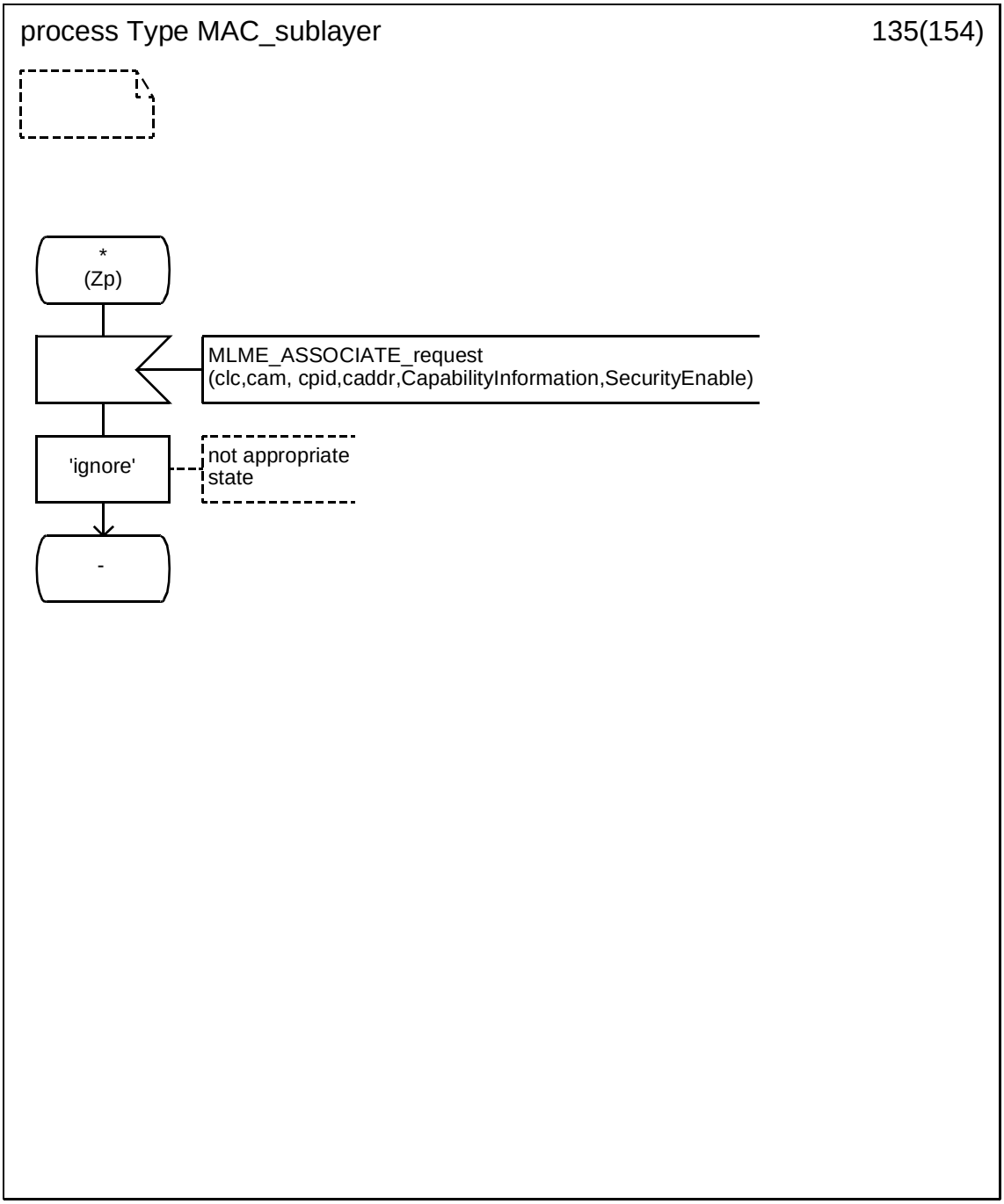


Copyright © 2003 IEEE. All rights reserved.

Authorized licensed use limited to: IEEE - Staff. Downloaded on October 28,2024 at 20:20:02 UTC from IEEE Xplore. Restrictions apply.

INTEL-1011
U.S. Patent 8,219,129

### D.3.1.136 Process type MAC_sublayer (136)

.

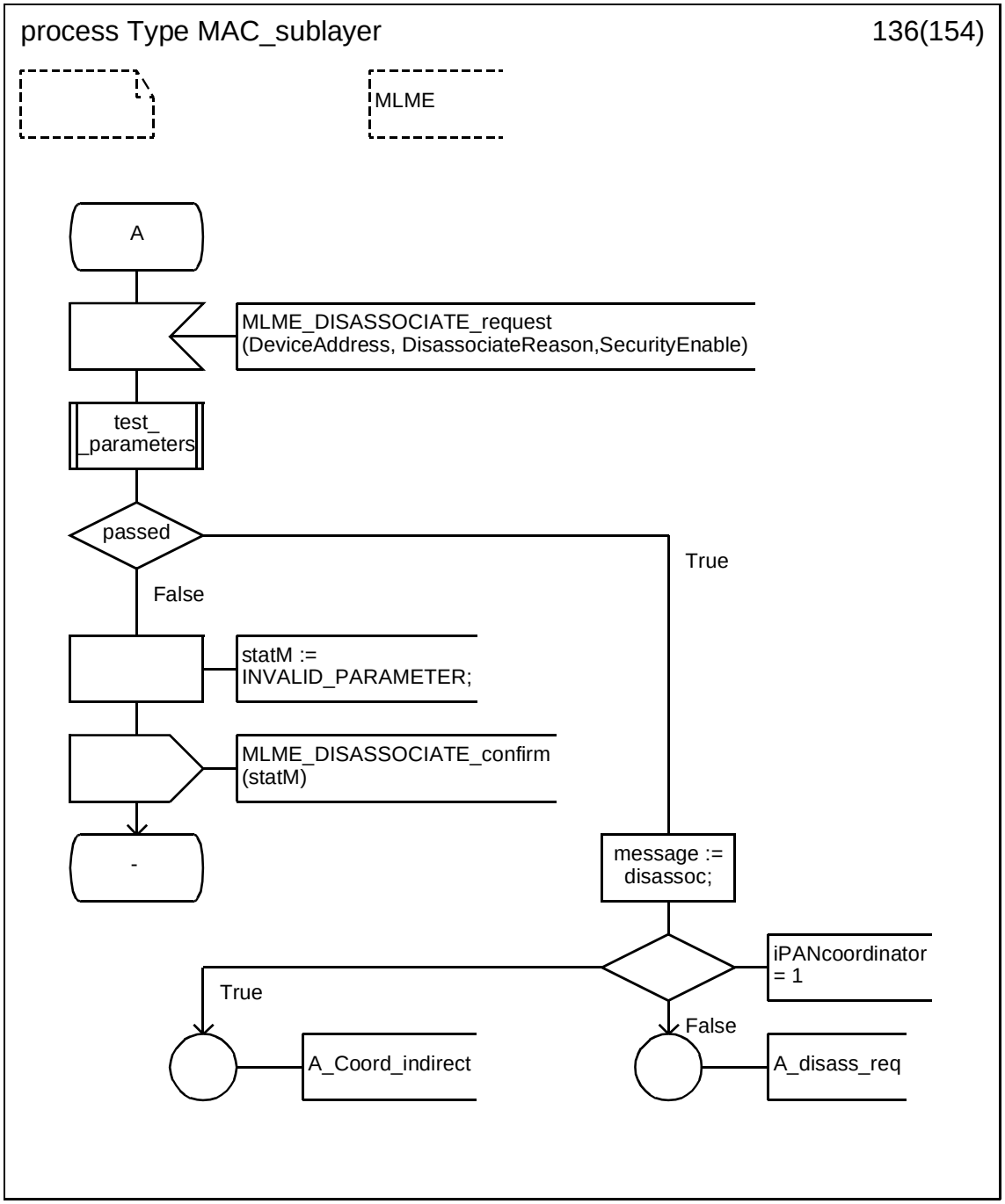



Copyright © 2003 IEEE. All rights reserved.
Authorized licensed use limited to: IEEE - Staff. Downloaded on October 28,2024 at 20:20:02 UTC from IEEE Xplore. Restrictions apply.

INTEL-1011
U.S. Patent 8,219,129

### D.3.1.137 Process type MAC_sublayer (137)

.

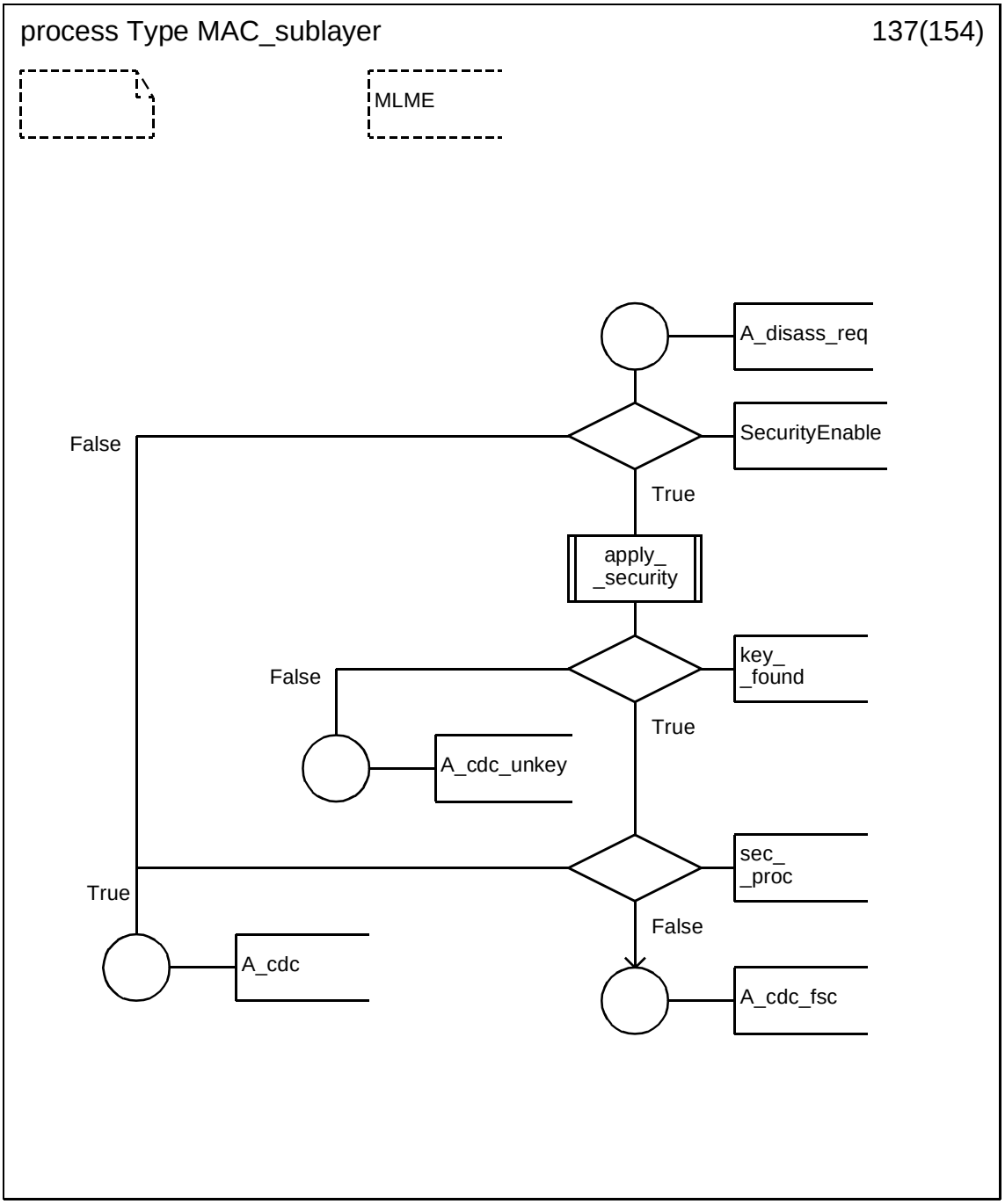


Copyright © 2003 IEEE. All rights reserved.

Authorized licensed use limited to: IEEE - Staff. Downloaded on October 28,2024 at 20:20:02 UTC from IEEE Xplore. Restrictions apply.

INTEL-1011
U.S. Patent 8,219,129

### D.3.1.138 Process type MAC_sublayer (138)

r.

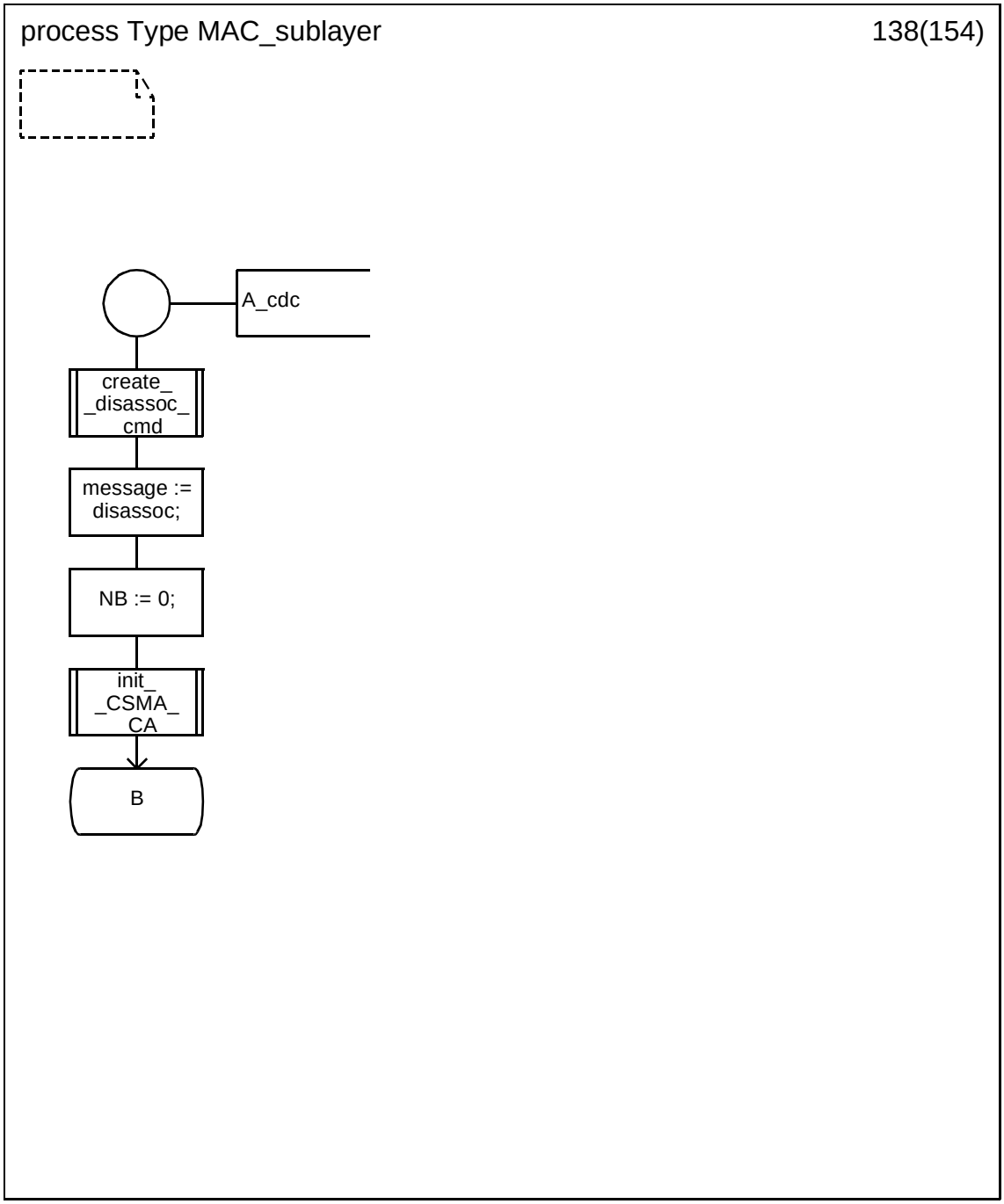



Copyright © 2003 IEEE. All rights reserved.
Authorized licensed use limited to: IEEE - Staff. Downloaded on October 28,2024 at 20:20:02 UTC from IEEE Xplore. Restrictions apply.

INTEL-1011
U.S. Patent 8,219,129

### D.3.1.139 Process type MAC_sublayer (139)

.

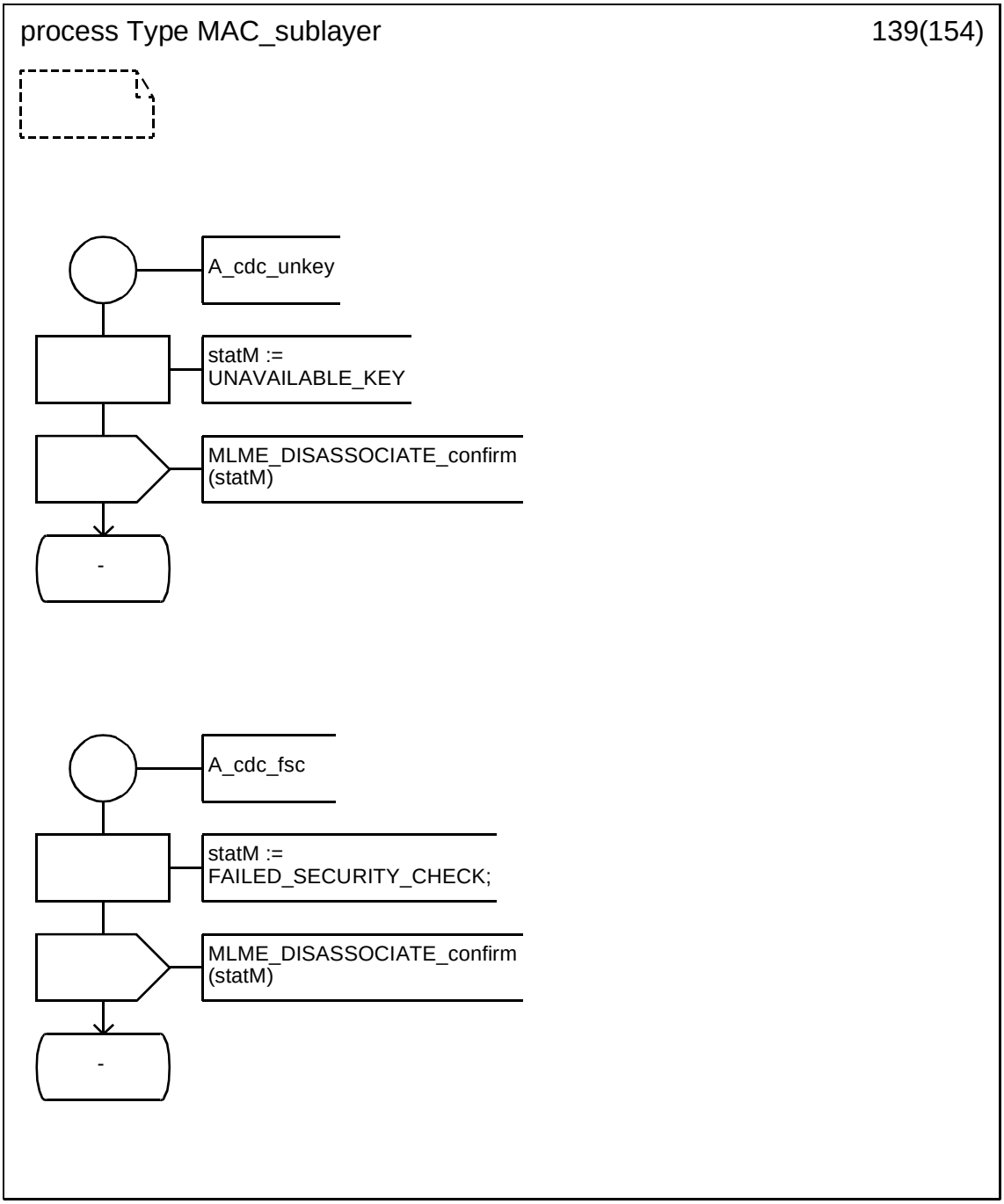


Copyright © 2003 IEEE. All rights reserved.

Authorized licensed use limited to: IEEE - Staff. Downloaded on October 28,2024 at 20:20:02 UTC from IEEE Xplore. Restrictions apply.

INTEL-1011
U.S. Patent 8,219,129

### D.3.1.140 Process type MAC_sublayer (140)

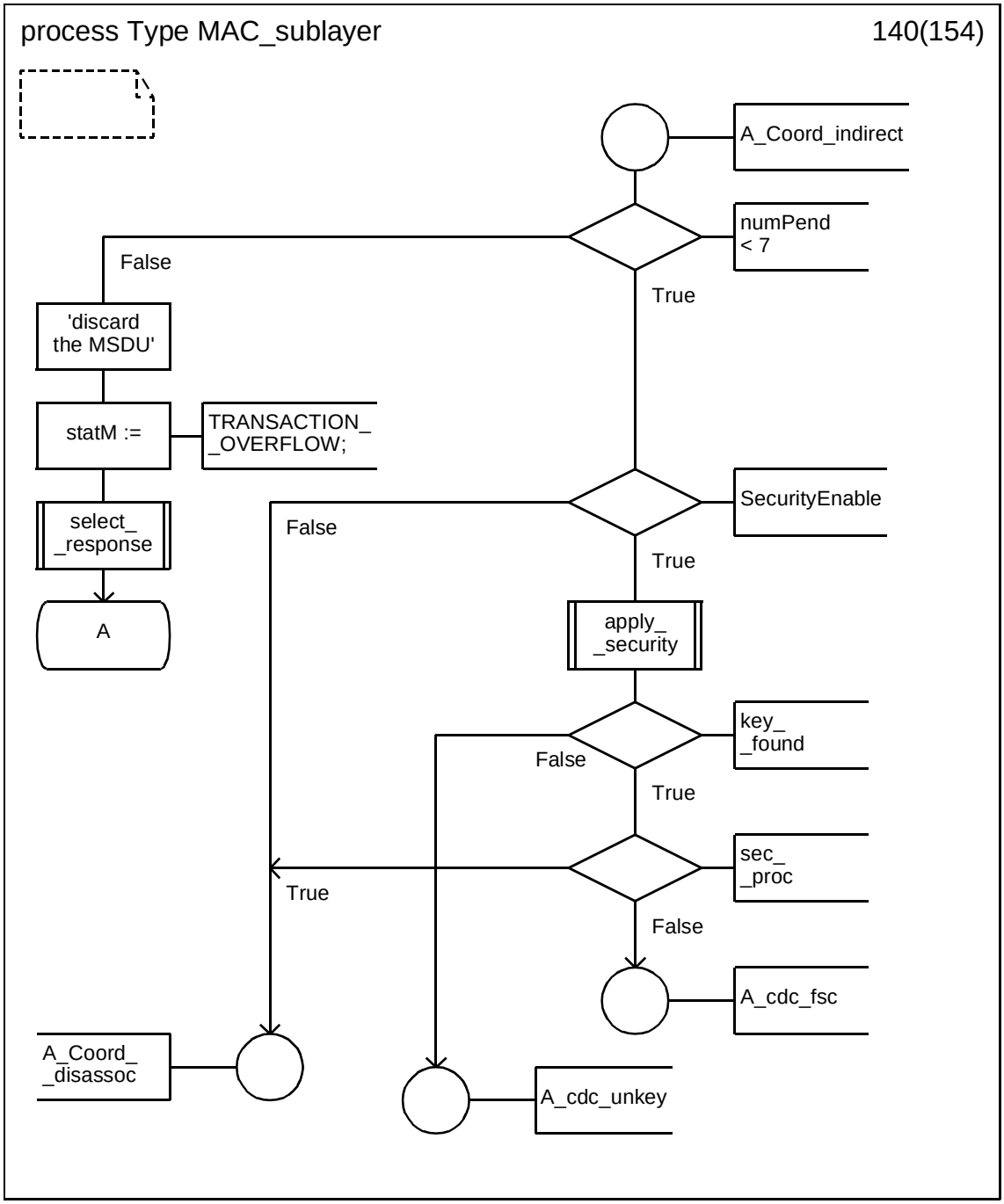



Copyright © 2003 IEEE. All rights reserved.
Authorized licensed use limited to: IEEE - Staff. Downloaded on October 28,2024 at 20:20:02 UTC from IEEE Xplore. Restrictions apply.

INTEL-1011
U.S. Patent 8,219,129

### D.3.1.141 Process type MAC_sublayer (141)

r.

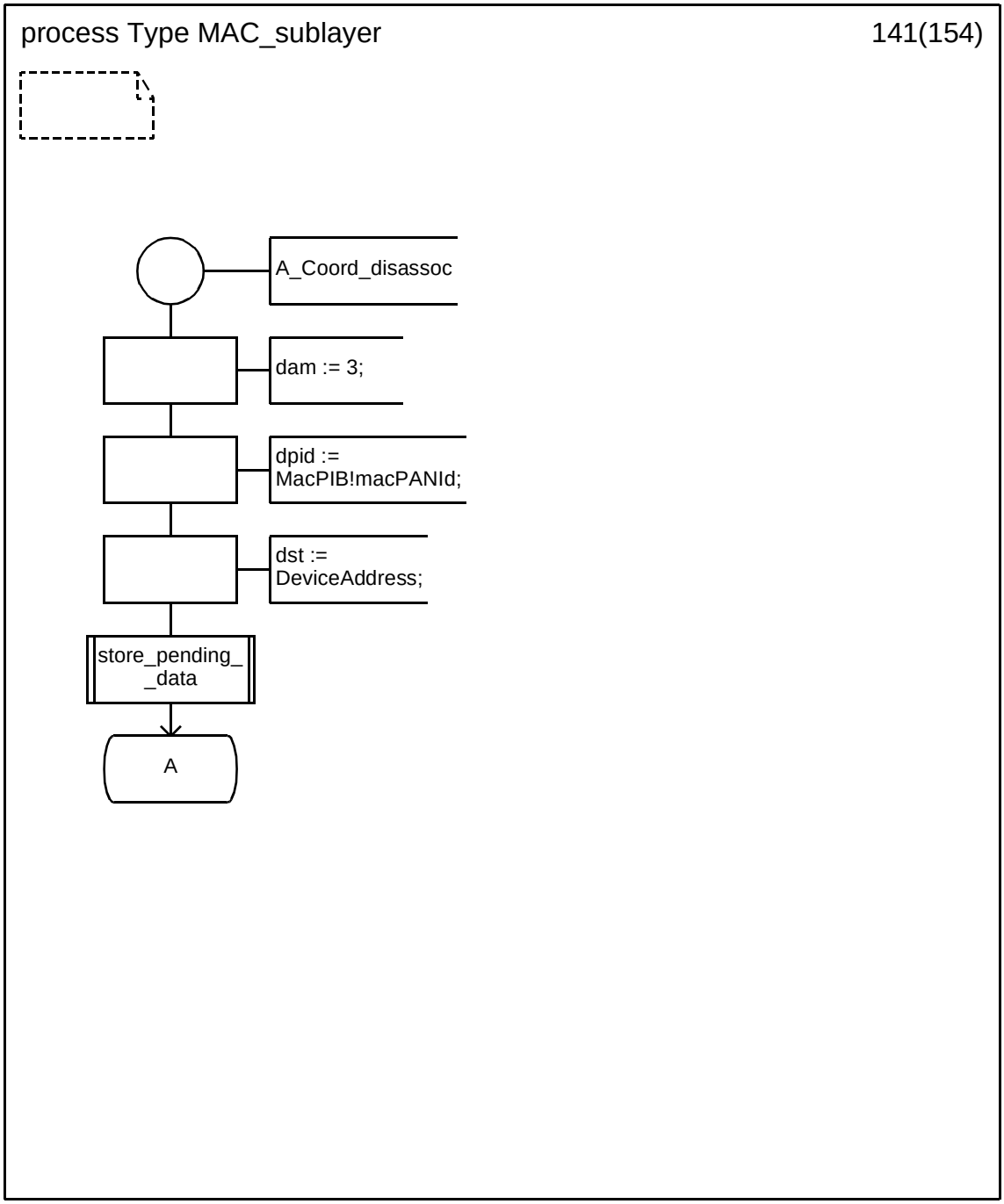


Copyright © 2003 IEEE. All rights reserved.

Authorized licensed use limited to: IEEE - Staff. Downloaded on October 28,2024 at 20:20:02 UTC from IEEE Xplore. Restrictions apply.

INTEL-1011
U.S. Patent 8,219,129

### D.3.1.142 Process type MAC_sublayer (142)

.

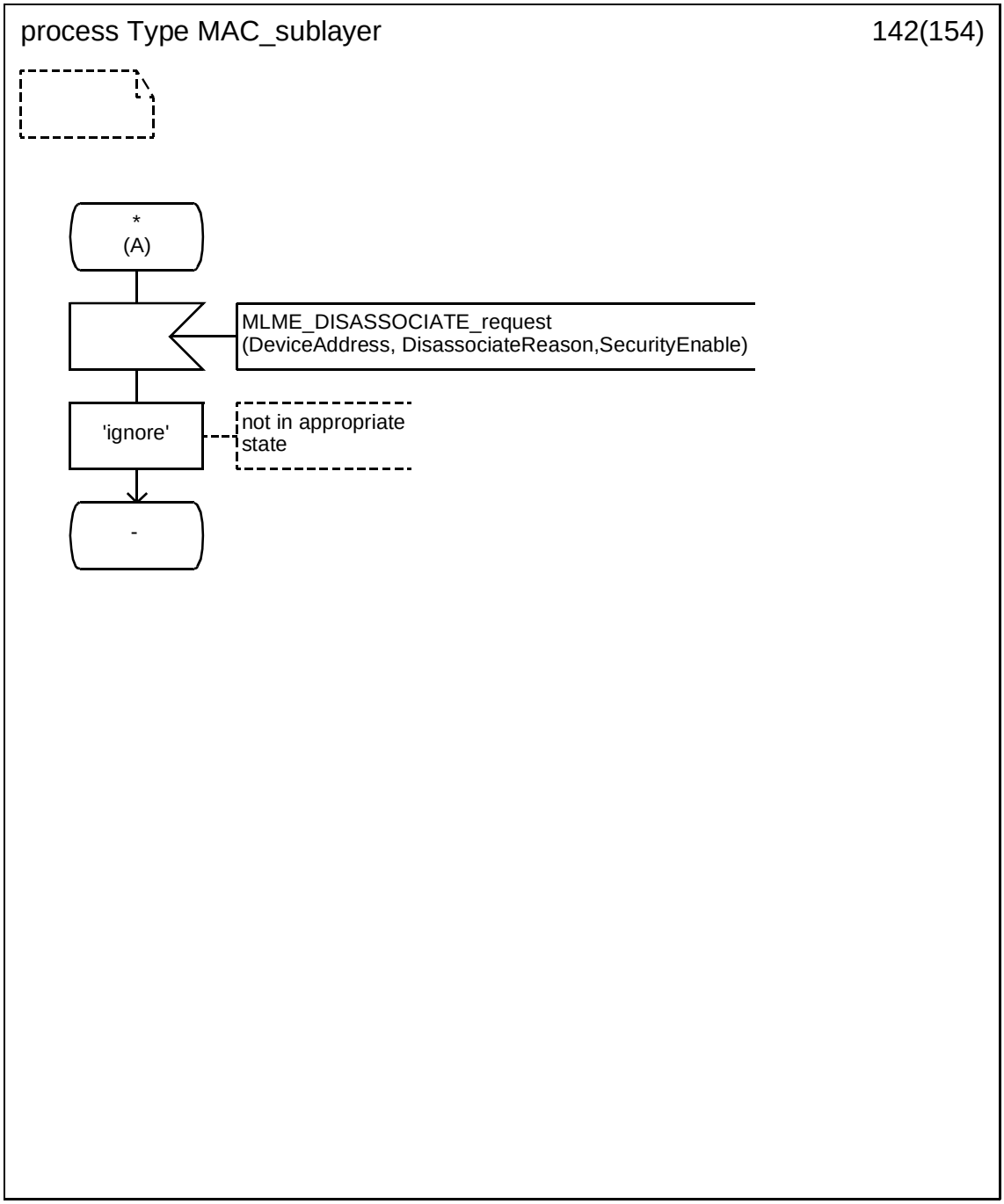



Copyright © 2003 IEEE. All rights reserved.
Authorized licensed use limited to: IEEE - Staff. Downloaded on October 28,2024 at 20:20:02 UTC from IEEE Xplore. Restrictions apply.

INTEL-1011
U.S. Patent 8,219,129

### D.3.1.143 Process type MAC_sublayer (143)

.

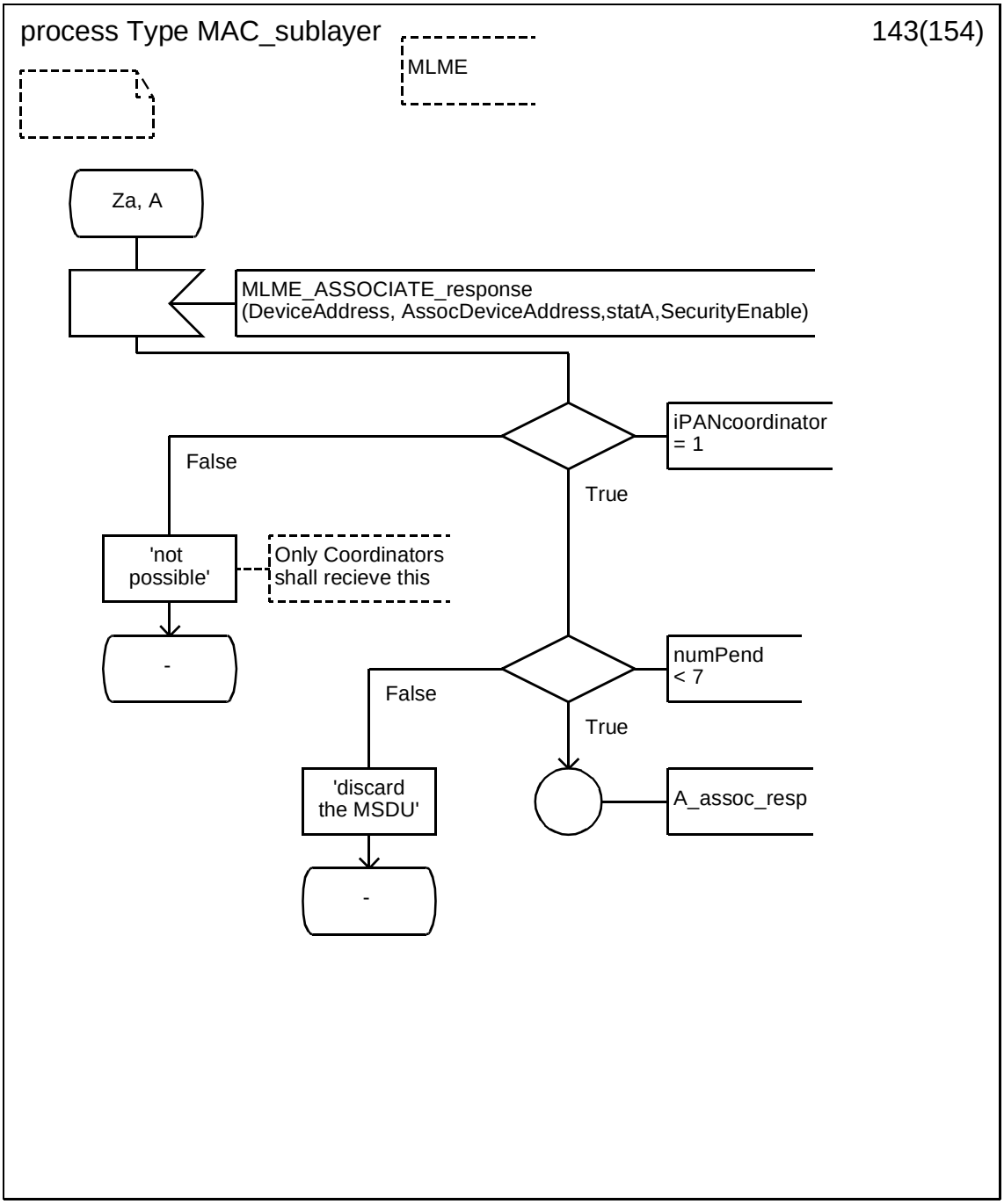


Copyright © 2003 IEEE. All rights reserved.

Authorized licensed use limited to: IEEE - Staff. Downloaded on October 28,2024 at 20:20:02 UTC from IEEE Xplore. Restrictions apply.

INTEL-1011
U.S. Patent 8,219,129

### D.3.1.144 Process type MAC_sublayer (144)

.

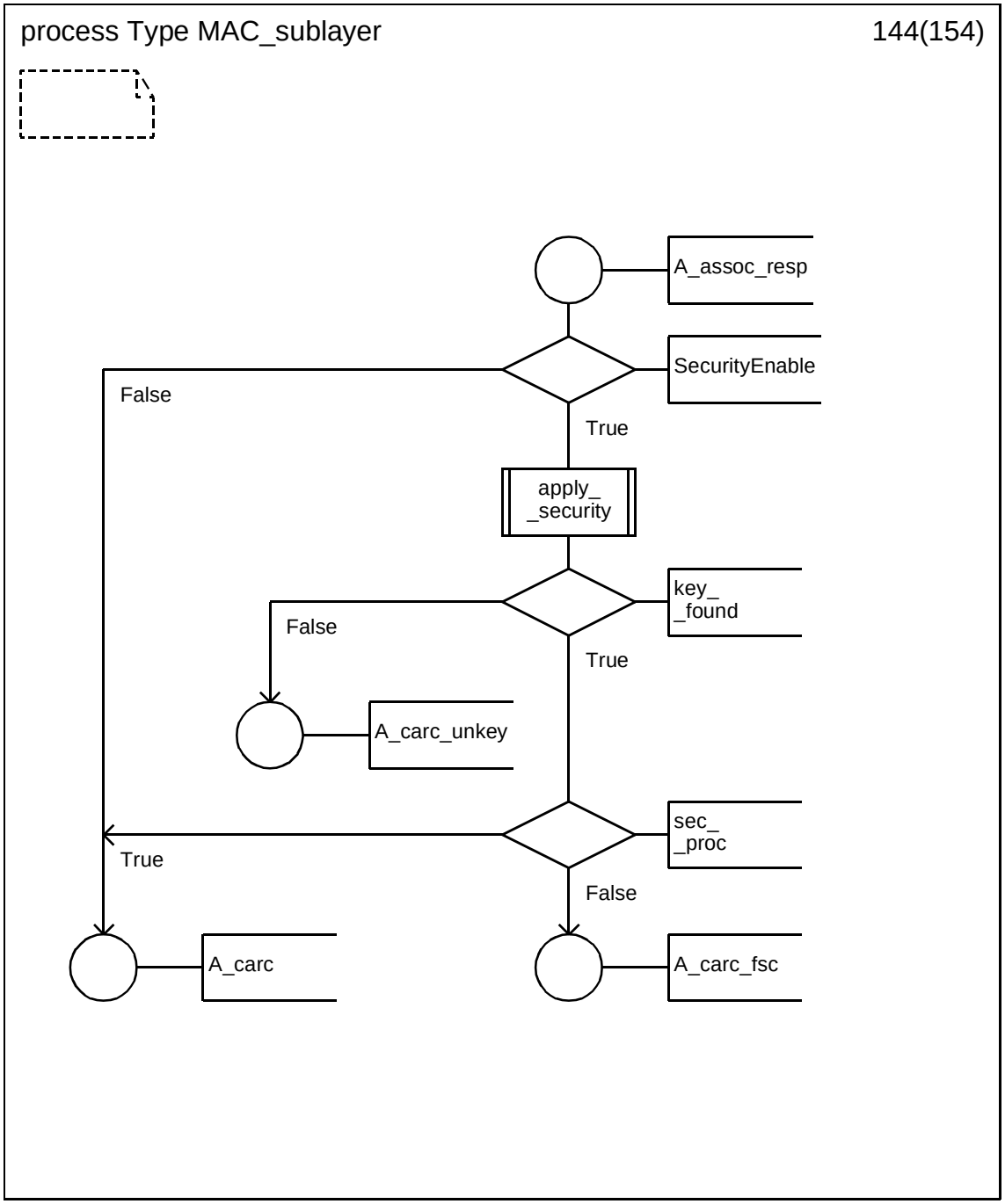



Copyright © 2003 IEEE. All rights reserved.
Authorized licensed use limited to: IEEE - Staff. Downloaded on October 28,2024 at 20:20:02 UTC from IEEE Xplore. Restrictions apply.

INTEL-1011
U.S. Patent 8,219,129

### D.3.1.145 Process type MAC_sublayer (145)

.

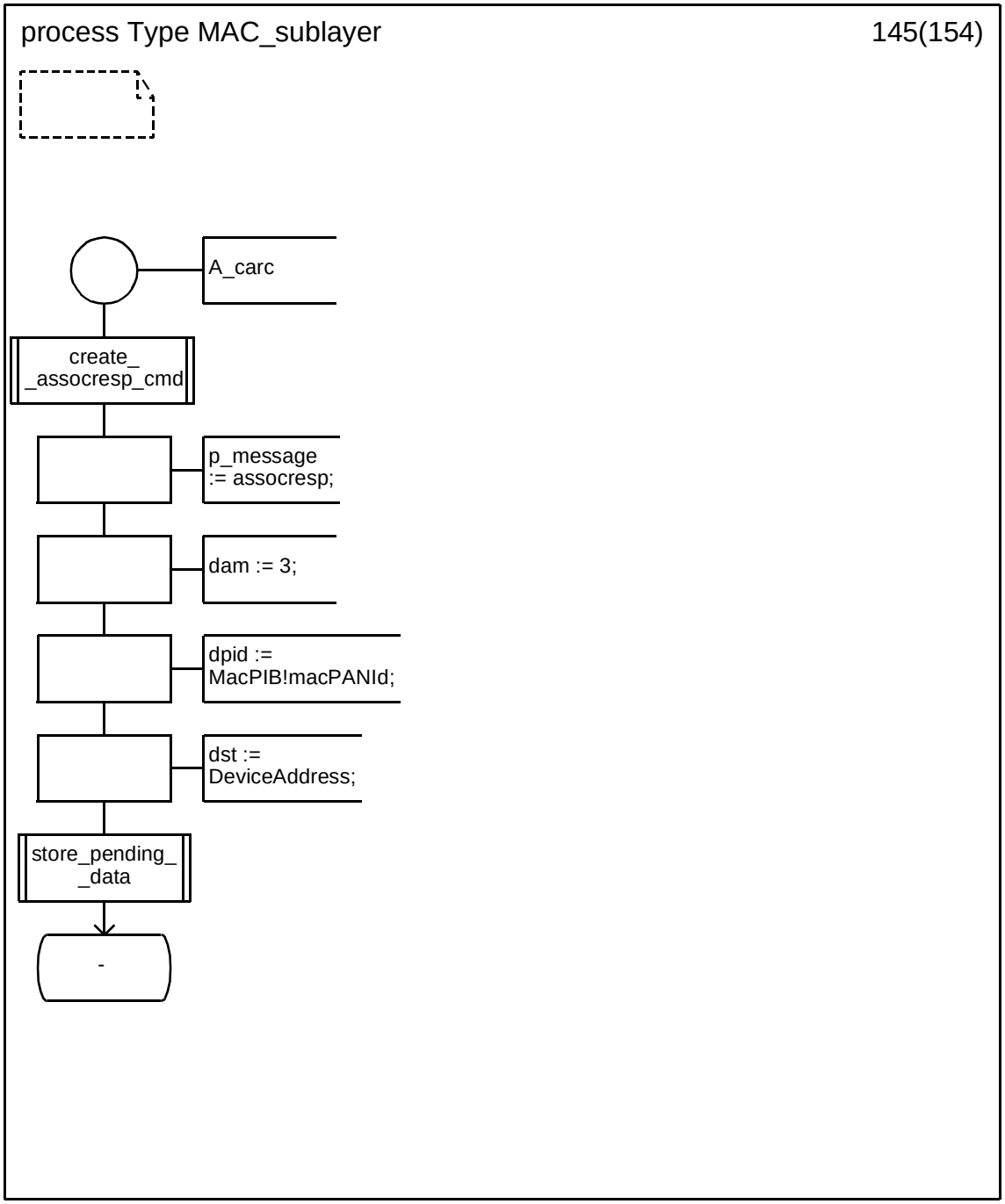


Copyright © 2003 IEEE. All rights reserved.

Authorized licensed use limited to: IEEE - Staff. Downloaded on October 28,2024 at 20:20:02 UTC from IEEE Xplore. Restrictions apply.

INTEL-1011
U.S. Patent 8,219,129

### D.3.1.146 Process type MAC_sublayer (146)

.

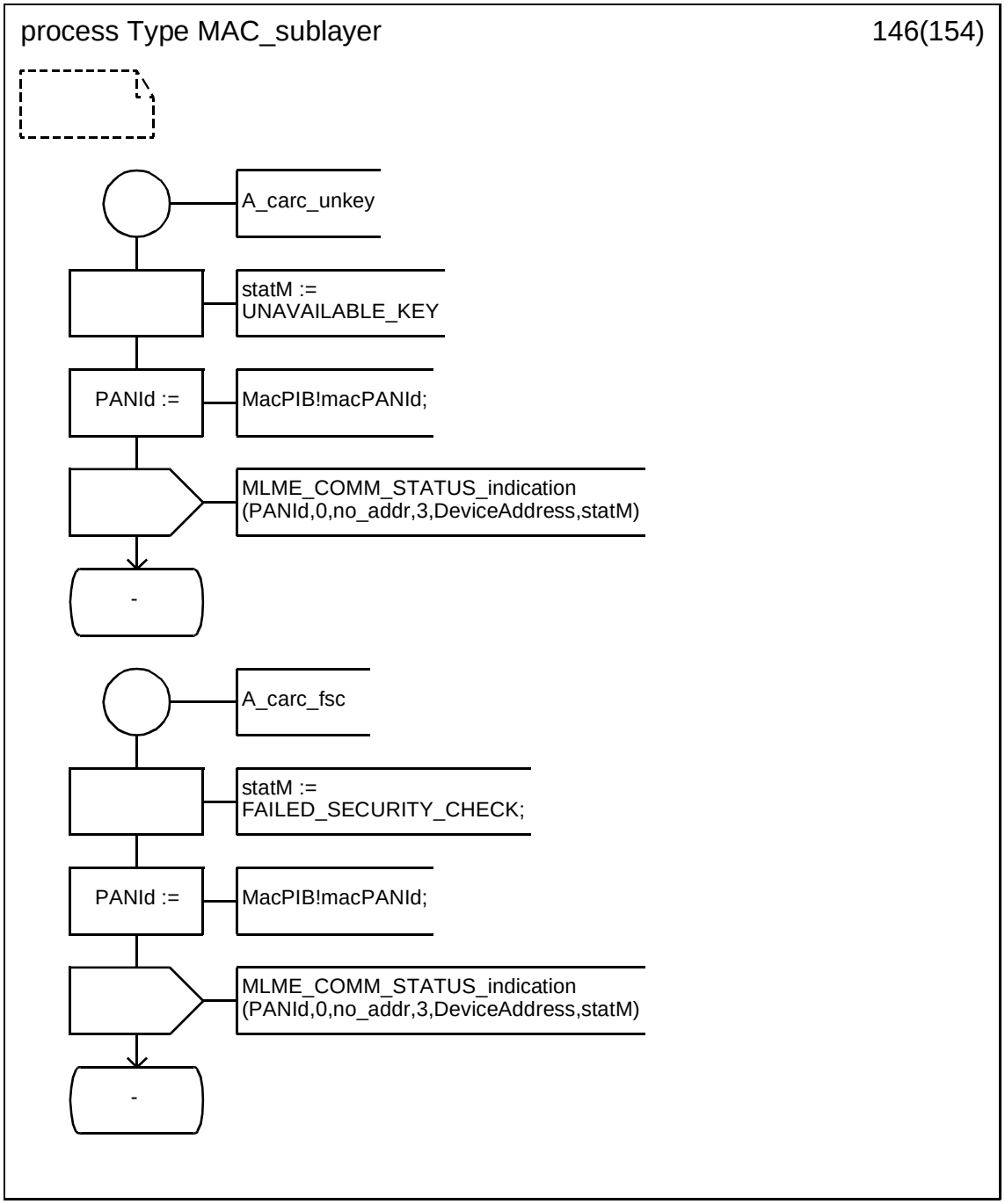



Copyright © 2003 IEEE. All rights reserved.
Authorized licensed use limited to: IEEE - Staff. Downloaded on October 28,2024 at 20:20:02 UTC from IEEE Xplore. Restrictions apply.

INTEL-1011
U.S. Patent 8,219,129

### D.3.1.147 Process type MAC_sublayer (147)

.

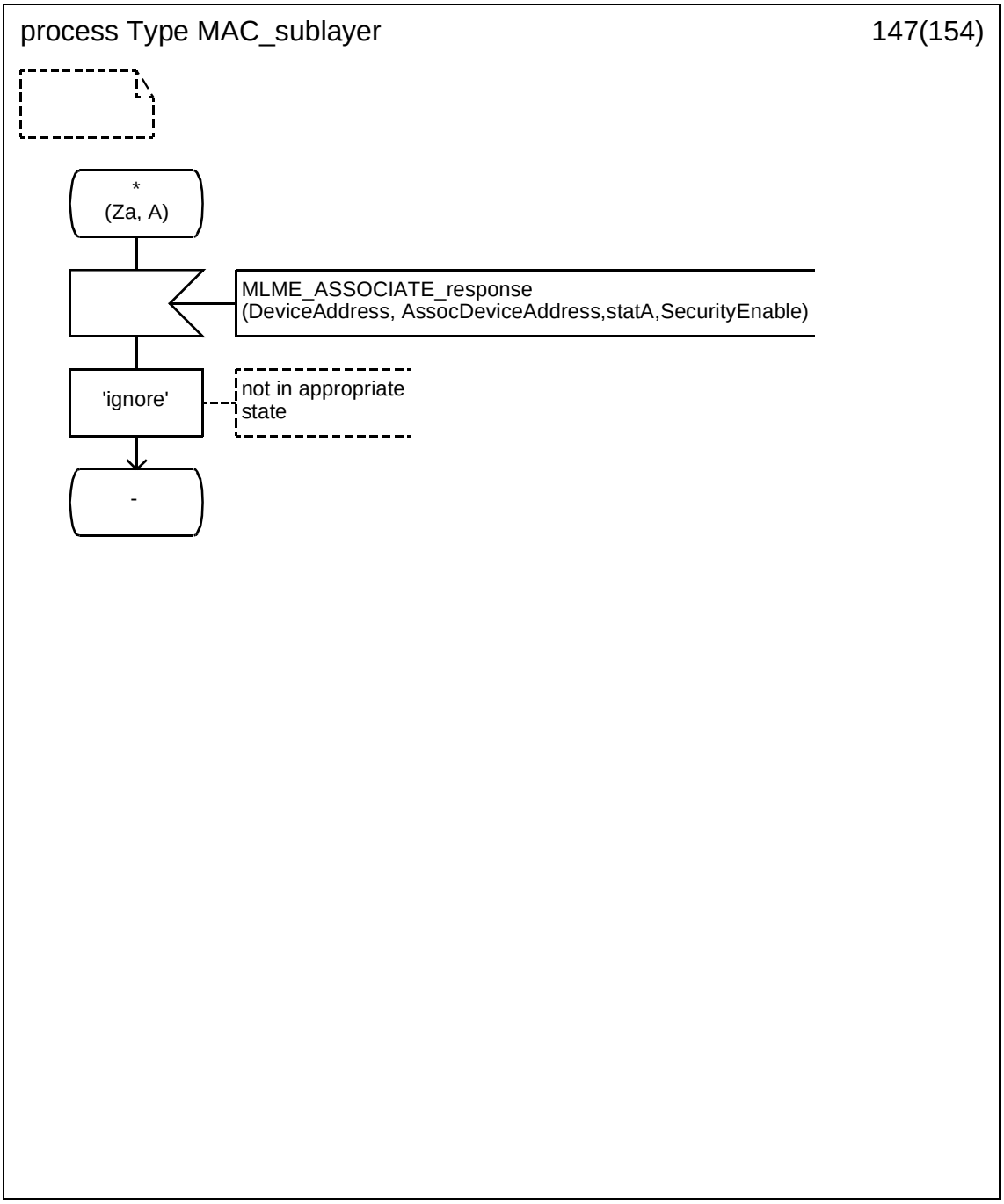


Copyright © 2003 IEEE. All rights reserved.

Authorized licensed use limited to: IEEE - Staff. Downloaded on October 28,2024 at 20:20:02 UTC from IEEE Xplore. Restrictions apply.

INTEL-1011
U.S. Patent 8,219,129

### D.3.1.148 Process type MAC_sublayer (148)

.

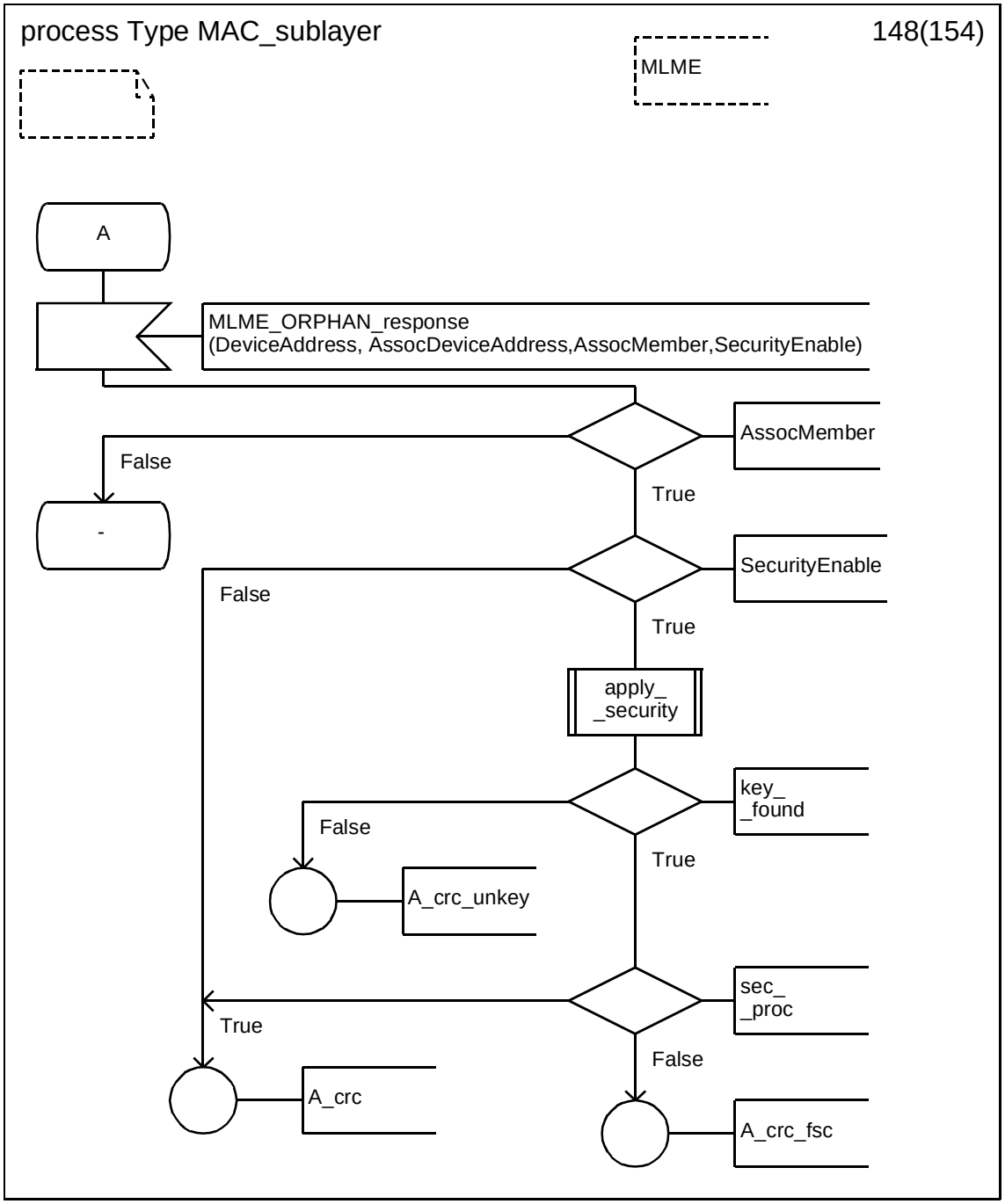



Copyright © 2003 IEEE. All rights reserved.
Authorized licensed use limited to: IEEE - Staff. Downloaded on October 28,2024 at 20:20:02 UTC from IEEE Xplore. Restrictions apply.

INTEL-1011
U.S. Patent 8,219,129

### D.3.1.149 Process type MAC_sublayer (149)

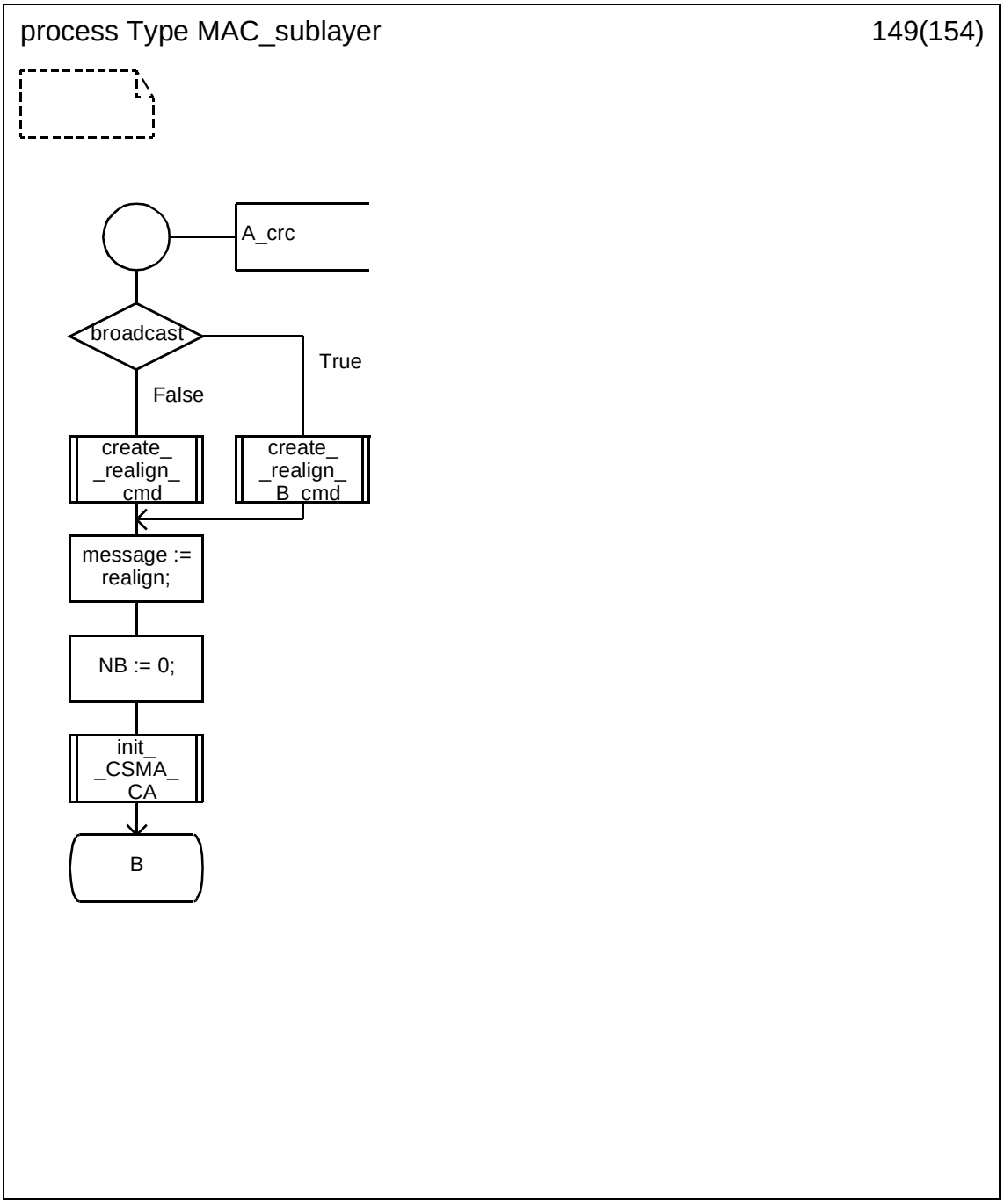


Copyright © 2003 IEEE. All rights reserved.

Authorized licensed use limited to: IEEE - Staff. Downloaded on October 28,2024 at 20:20:02 UTC from IEEE Xplore. Restrictions apply.

INTEL-1011
U.S. Patent 8,219,129

### D.3.1.150 Process type MAC_sublayer (150)

.

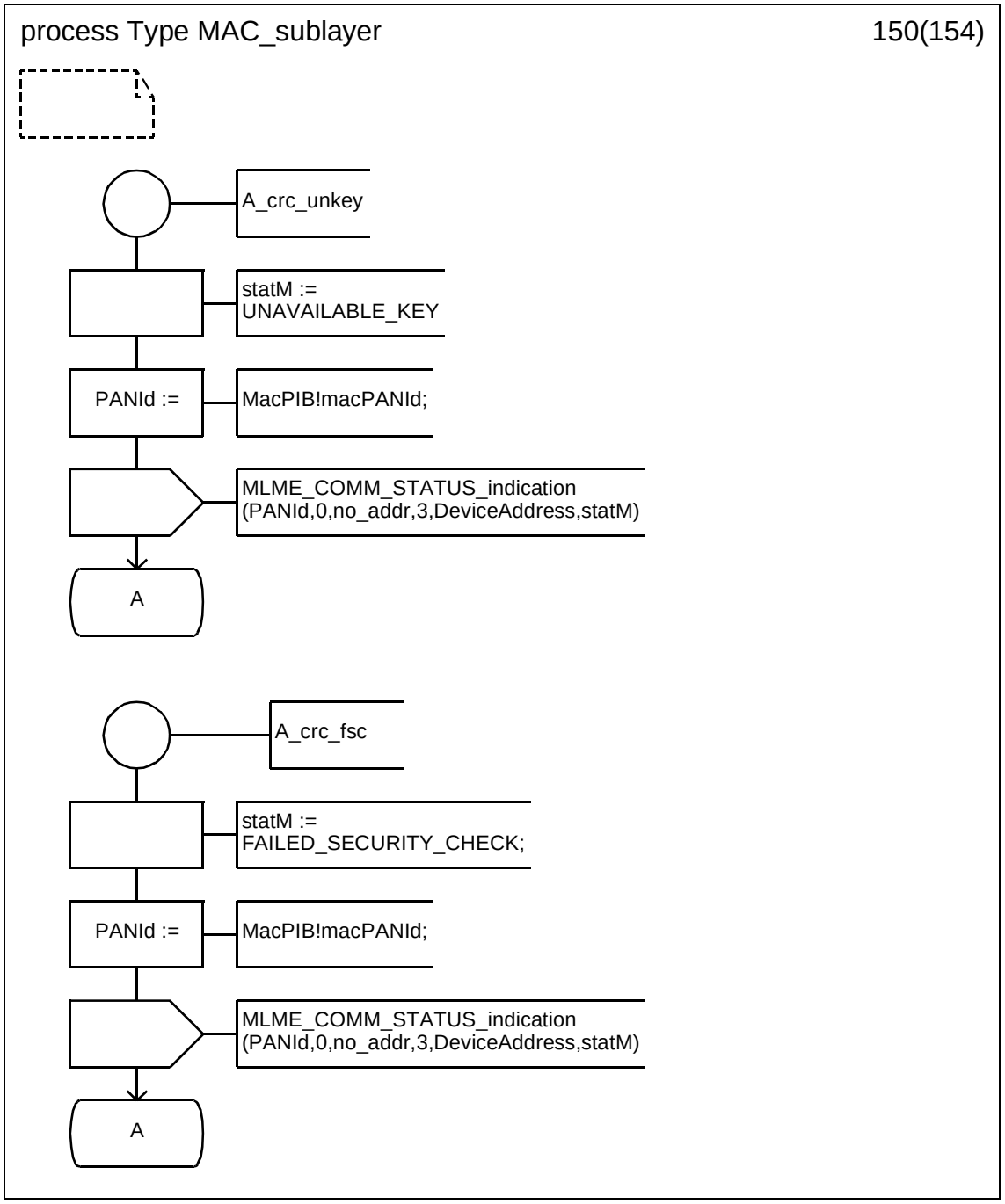



Copyright © 2003 IEEE. All rights reserved.
Authorized licensed use limited to: IEEE - Staff. Downloaded on October 28,2024 at 20:20:02 UTC from IEEE Xplore. Restrictions apply.

INTEL-1011
U.S. Patent 8,219,129

### D.3.1.151 Process type MAC_sublayer (151)

.

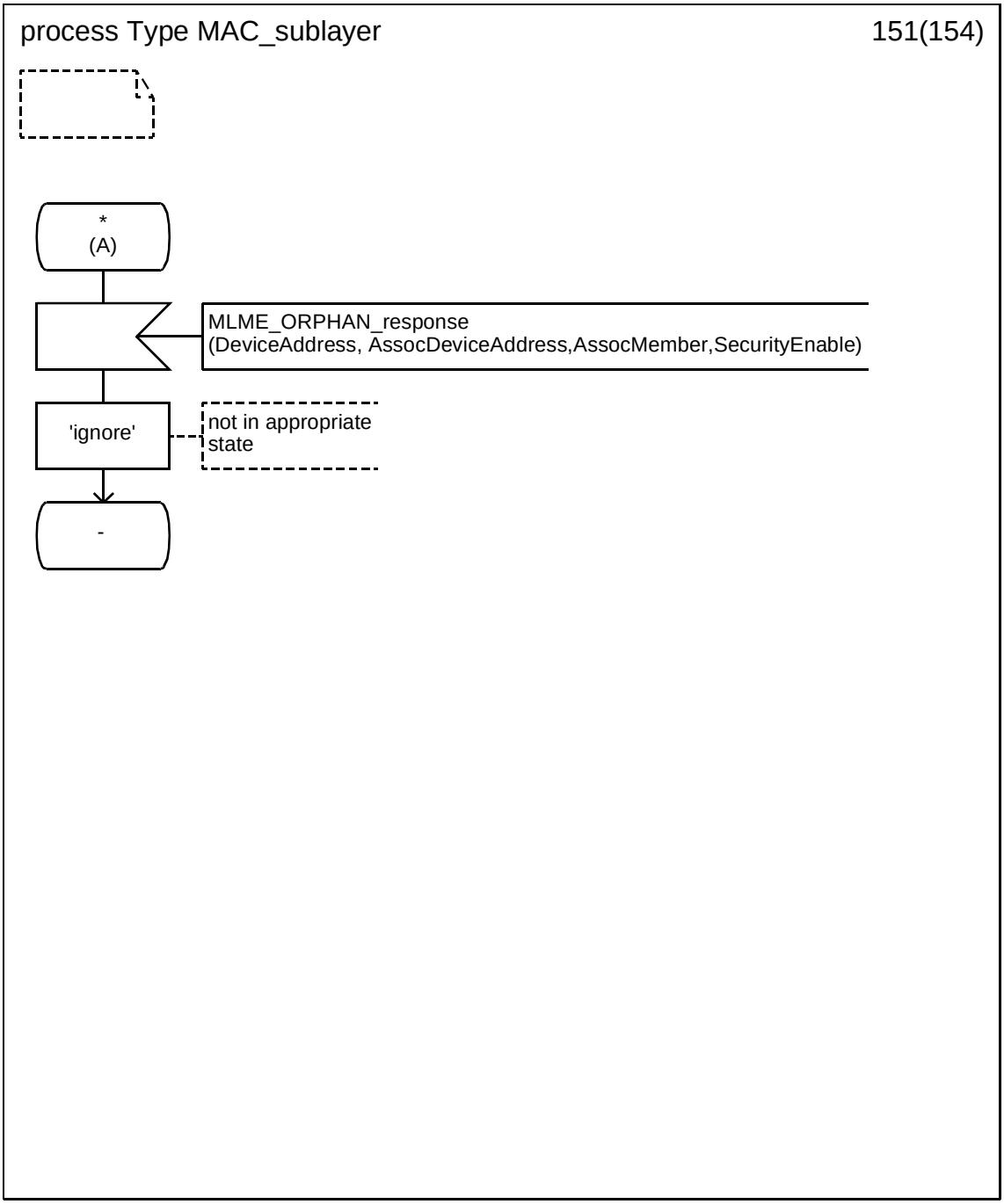


Copyright © 2003 IEEE. All rights reserved.

Authorized licensed use limited to: IEEE - Staff. Downloaded on October 28,2024 at 20:20:02 UTC from IEEE Xplore. Restrictions apply.

INTEL-1011
U.S. Patent 8,219,129

### D.3.1.152 Process type MAC_sublayer (152)

.

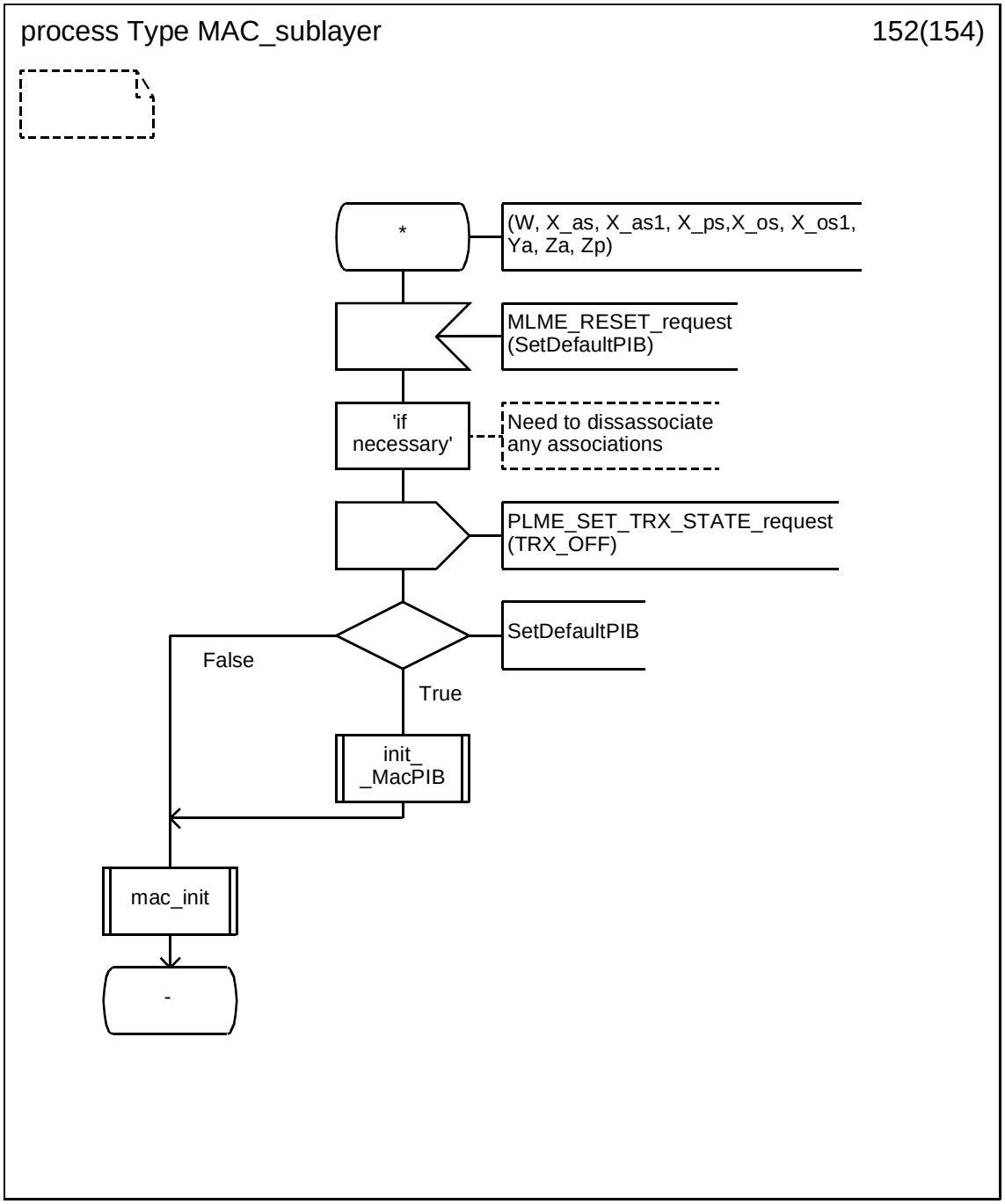



Copyright © 2003 IEEE. All rights reserved.
Authorized licensed use limited to: IEEE - Staff. Downloaded on October 28,2024 at 20:20:02 UTC from IEEE Xplore. Restrictions apply.

INTEL-1011
U.S. Patent 8,219,129

### D.3.1.153 Process type MAC_sublayer (153)

.

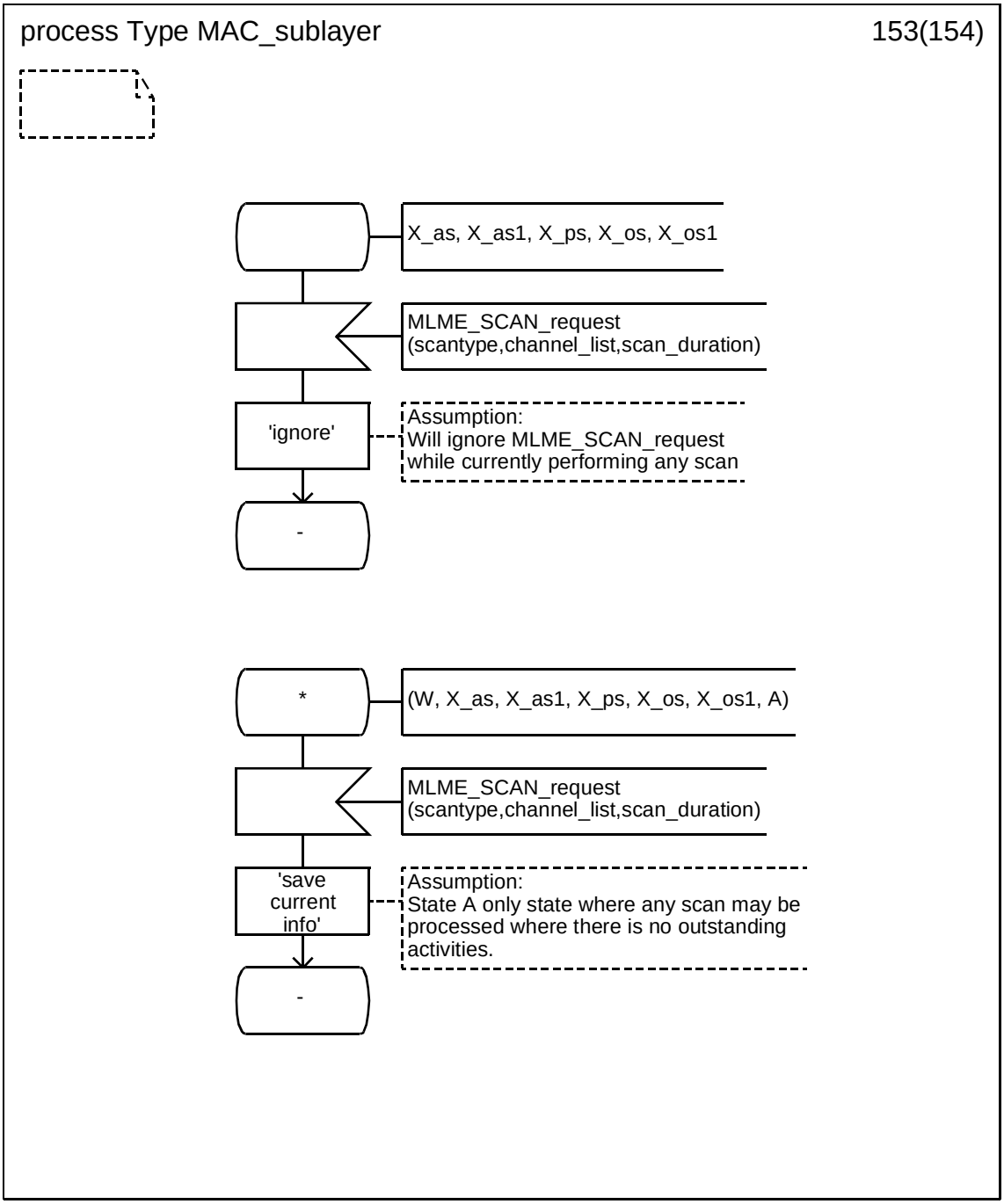


Copyright © 2003 IEEE. All rights reserved.

Authorized licensed use limited to: IEEE - Staff. Downloaded on October 28,2024 at 20:20:02 UTC from IEEE Xplore. Restrictions apply.

INTEL-1011
U.S. Patent 8,219,129

### D.3.1.154 Process type MAC_sublayer (154)

.

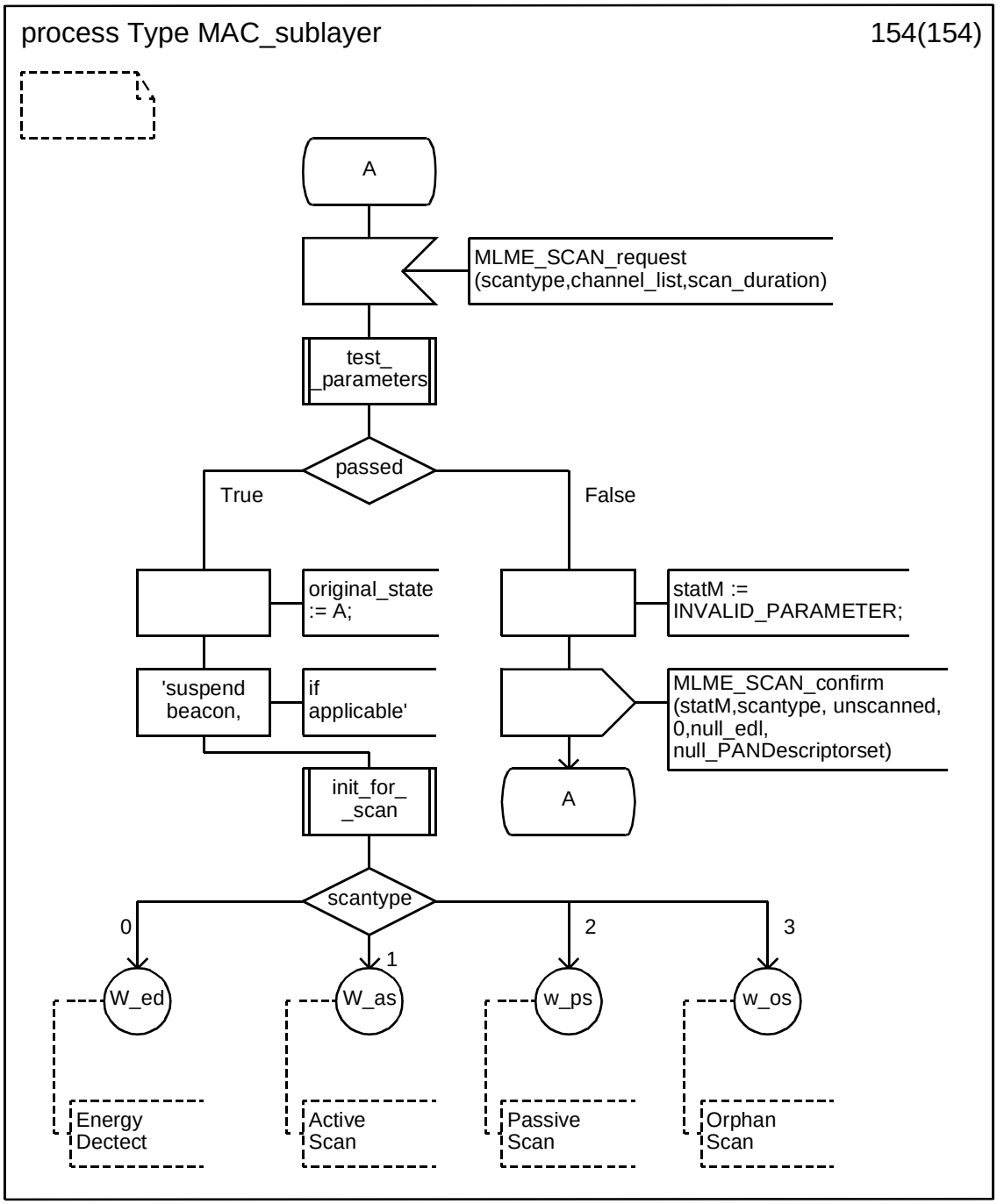



Copyright © 2003 IEEE. All rights reserved.
Authorized licensed use limited to: IEEE - Staff. Downloaded on October 28,2024 at 20:20:02 UTC from IEEE Xplore. Restrictions apply.

INTEL-1011
U.S. Patent 8,219,129

### D.3.1.154.1 Procedure mac_init (1)

.

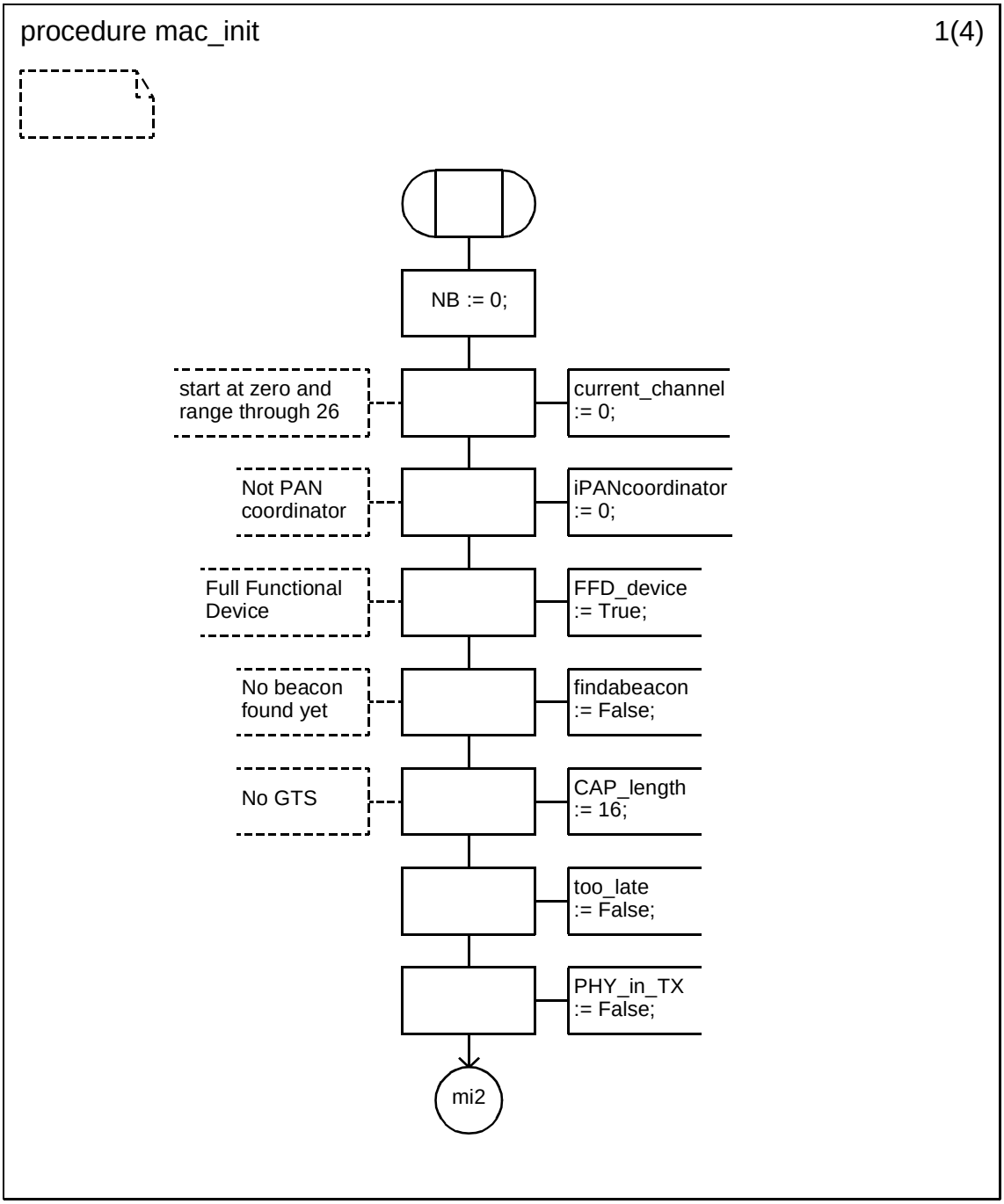


Copyright © 2003 IEEE. All rights reserved.

Authorized licensed use limited to: IEEE - Staff. Downloaded on October 28,2024 at 20:20:02 UTC from IEEE Xplore. Restrictions apply.

INTEL-1011
U.S. Patent 8,219,129

**D.3.1.154.2 Procedure mac_init (2)**

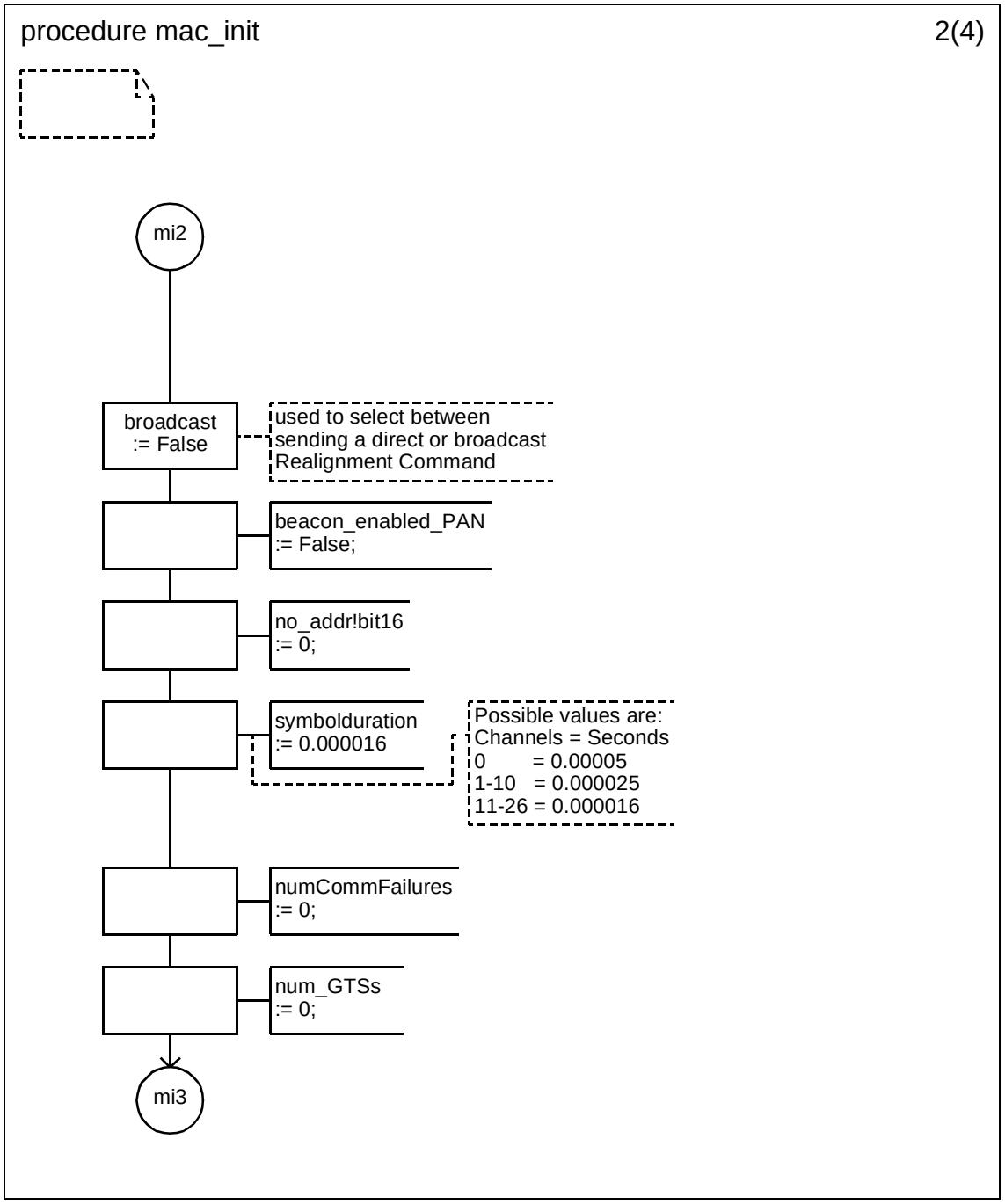



Copyright © 2003 IEEE. All rights reserved.
Authorized licensed use limited to: IEEE - Staff. Downloaded on October 28,2024 at 20:20:02 UTC from IEEE Xplore. Restrictions apply.

INTEL-1011
U.S. Patent 8,219,129

### D.3.1.154.3 Procedure mac_init (3)

.

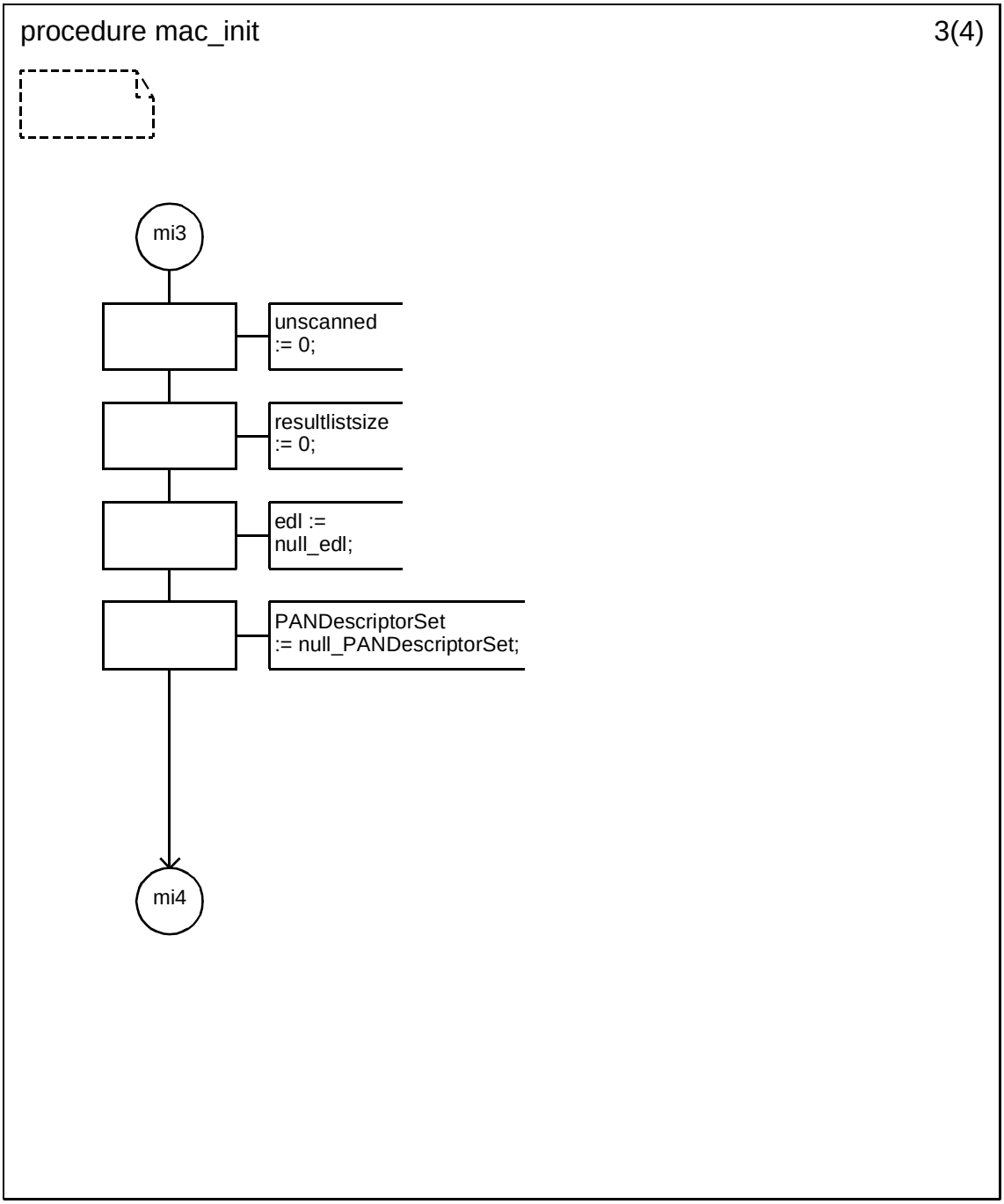


Copyright © 2003 IEEE. All rights reserved.

Authorized licensed use limited to: IEEE - Staff. Downloaded on October 28,2024 at 20:20:02 UTC from IEEE Xplore. Restrictions apply.

INTEL-1011
U.S. Patent 8,219,129

### D.3.1.154.4 Procedure mac_init (4)

.

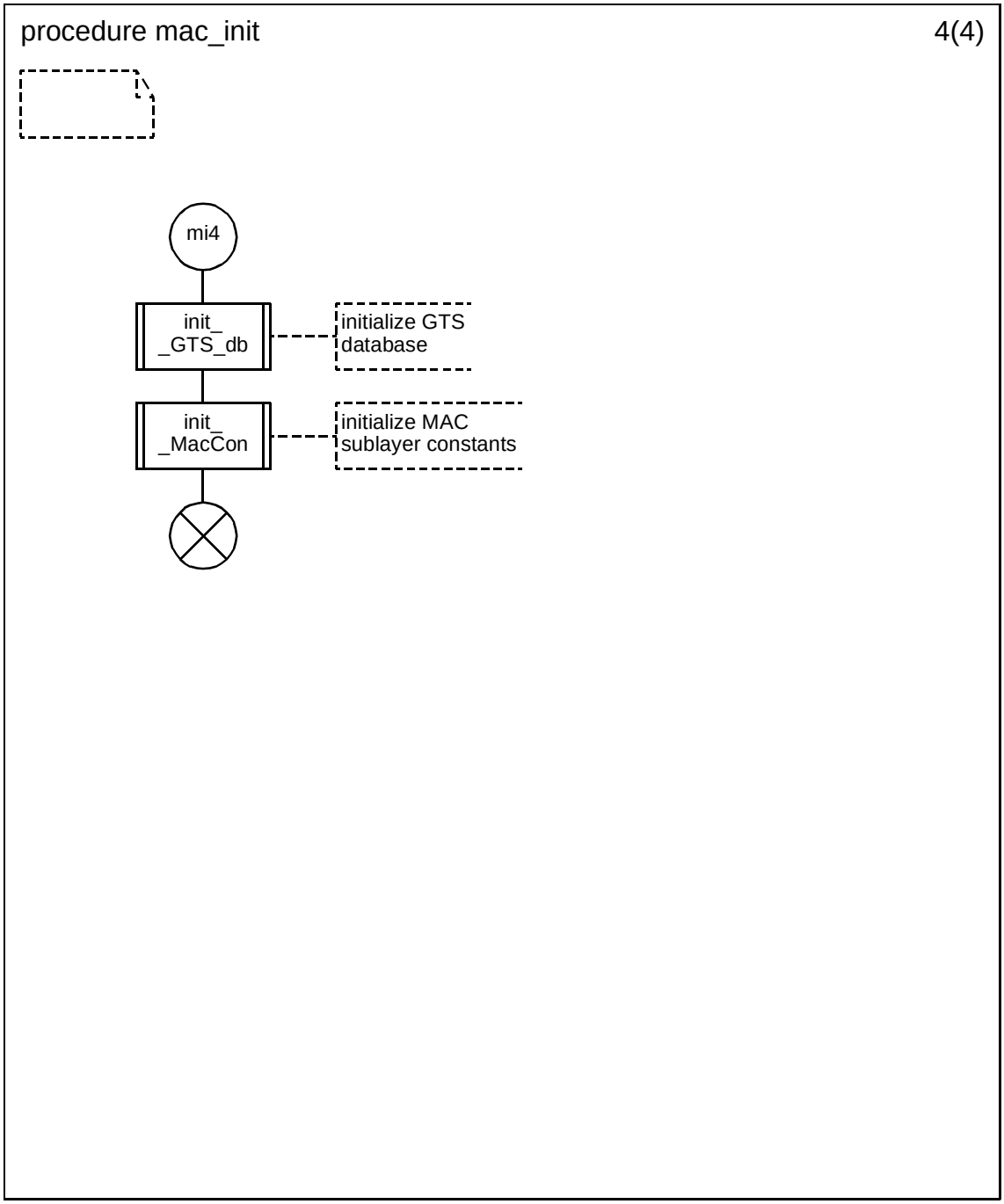



Copyright © 2003 IEEE. All rights reserved.
Authorized licensed use limited to: IEEE - Staff. Downloaded on October 28,2024 at 20:20:02 UTC from IEEE Xplore. Restrictions apply.

INTEL-1011
U.S. Patent 8,219,129

### D.3.1.154.5 Procedure init_MacPIB (1)

.

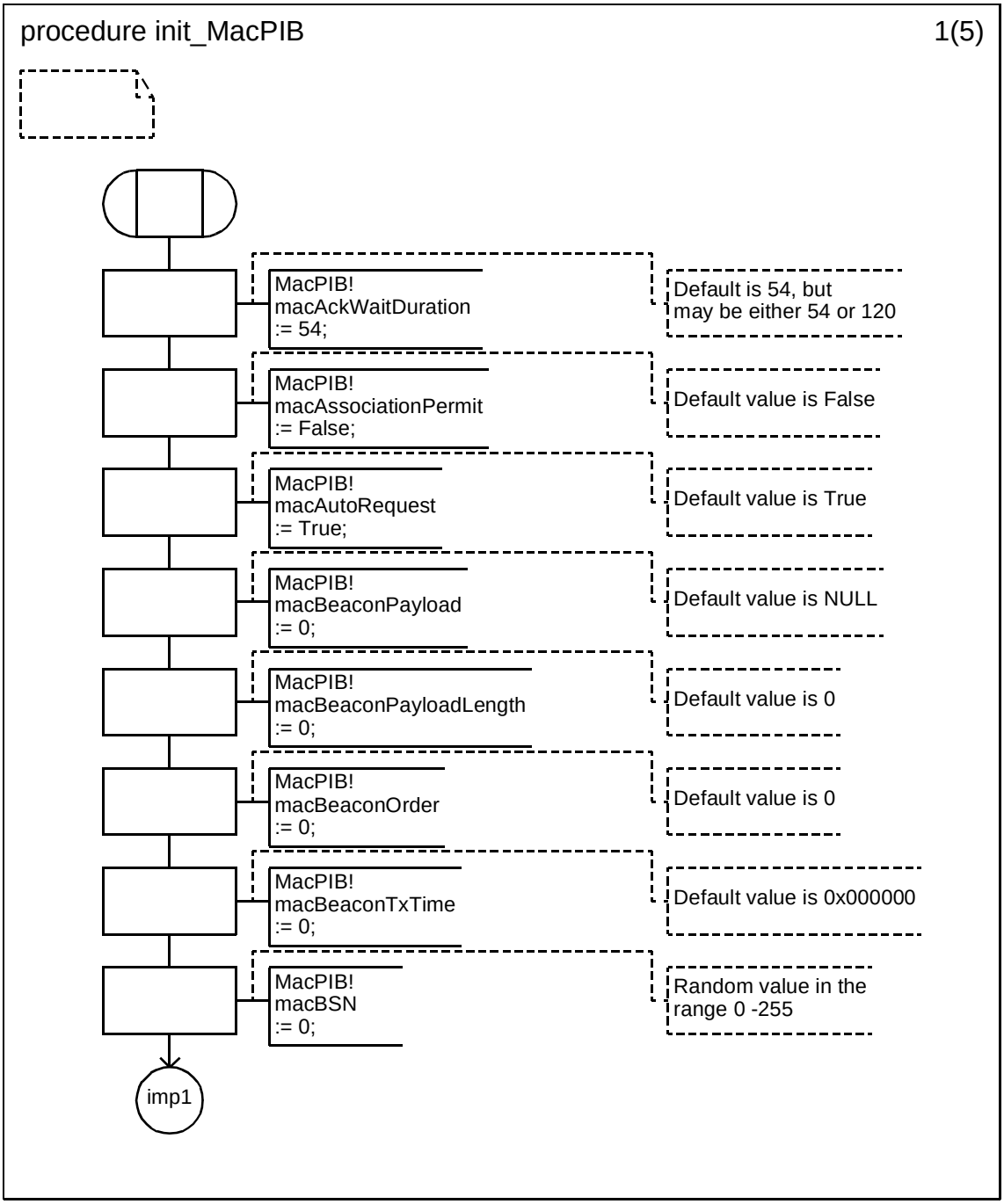


Copyright © 2003 IEEE. All rights reserved.

Authorized licensed use limited to: IEEE - Staff. Downloaded on October 28,2024 at 20:20:02 UTC from IEEE Xplore. Restrictions apply.

INTEL-1011
U.S. Patent 8,219,129

### D.3.1.154.6 Procedure init_MacPIB (2)

.

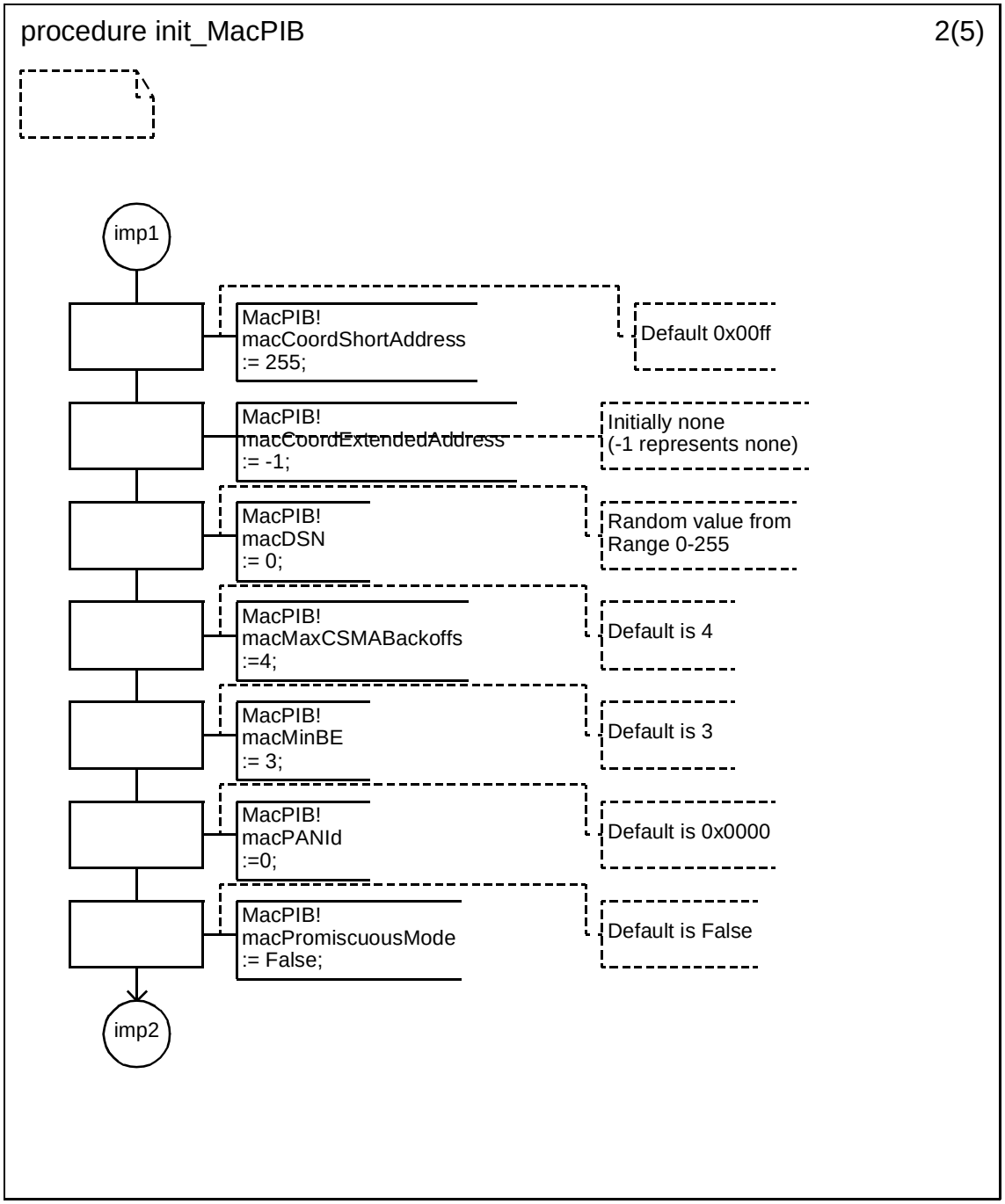



Copyright © 2003 IEEE. All rights reserved.
Authorized licensed use limited to: IEEE - Staff. Downloaded on October 28,2024 at 20:20:02 UTC from IEEE Xplore. Restrictions apply.

INTEL-1011
U.S. Patent 8,219,129

### D.3.1.154.7 Procedure init_MacPIB (3)

.

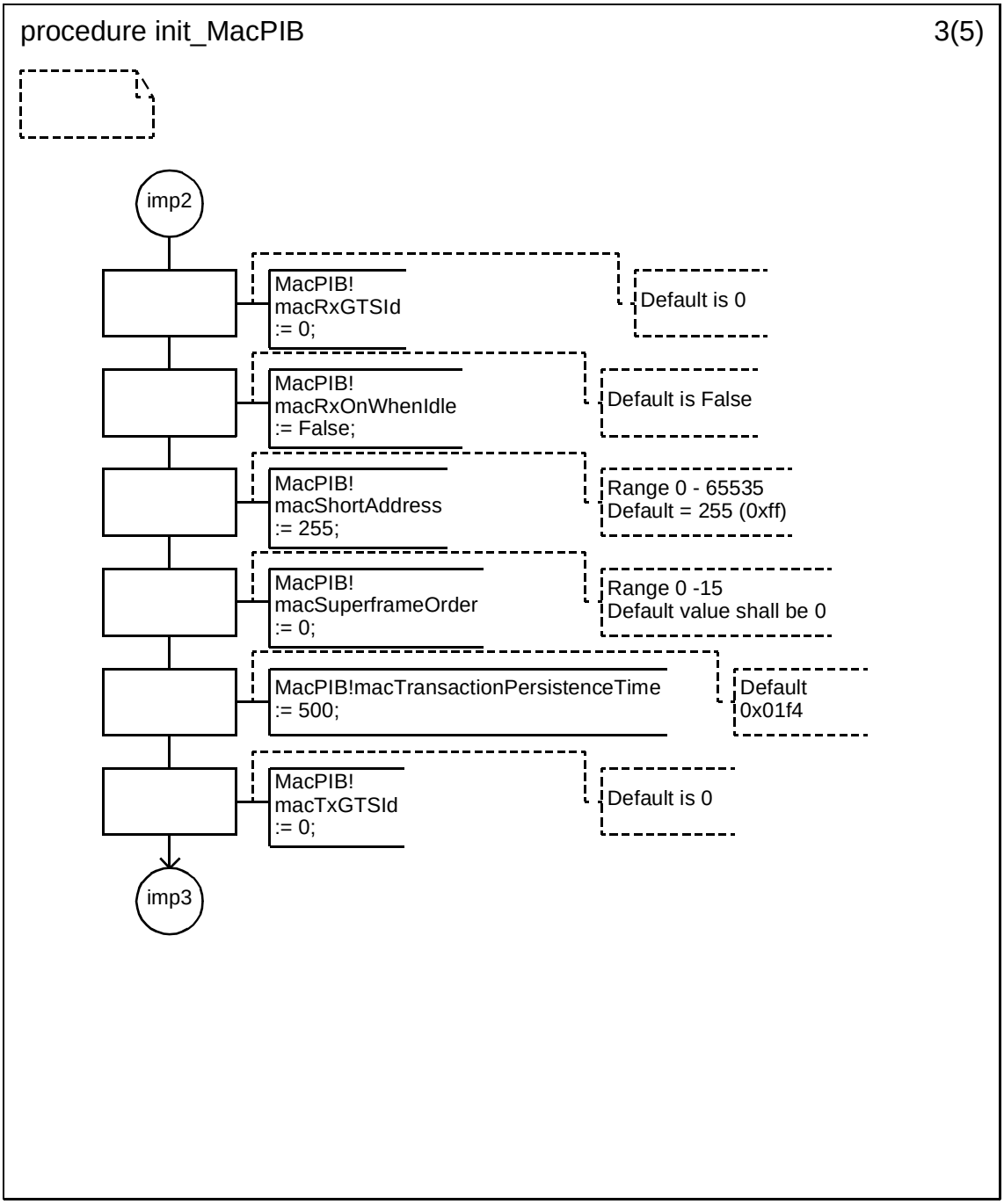


Copyright © 2003 IEEE. All rights reserved.

Authorized licensed use limited to: IEEE - Staff. Downloaded on October 28,2024 at 20:20:02 UTC from IEEE Xplore. Restrictions apply.

INTEL-1011
U.S. Patent 8,219,129

### D.3.1.154.8 Procedure init_MacPIB (4)

.

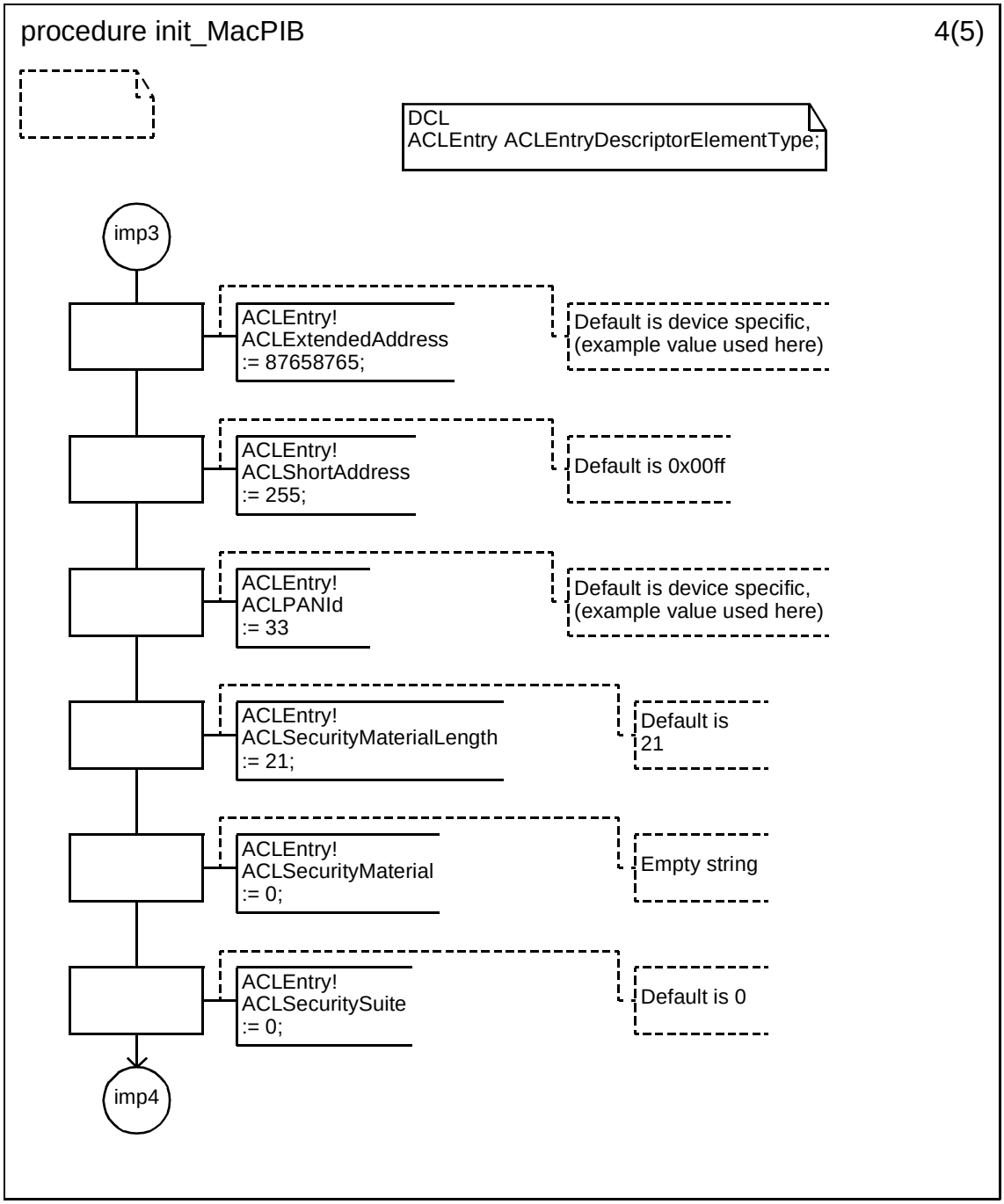



Copyright © 2003 IEEE. All rights reserved.
Authorized licensed use limited to: IEEE - Staff. Downloaded on October 28,2024 at 20:20:02 UTC from IEEE Xplore. Restrictions apply.

INTEL-1011
U.S. Patent 8,219,129

### D.3.1.154.9 Procedure init_MacPIB (5)

.

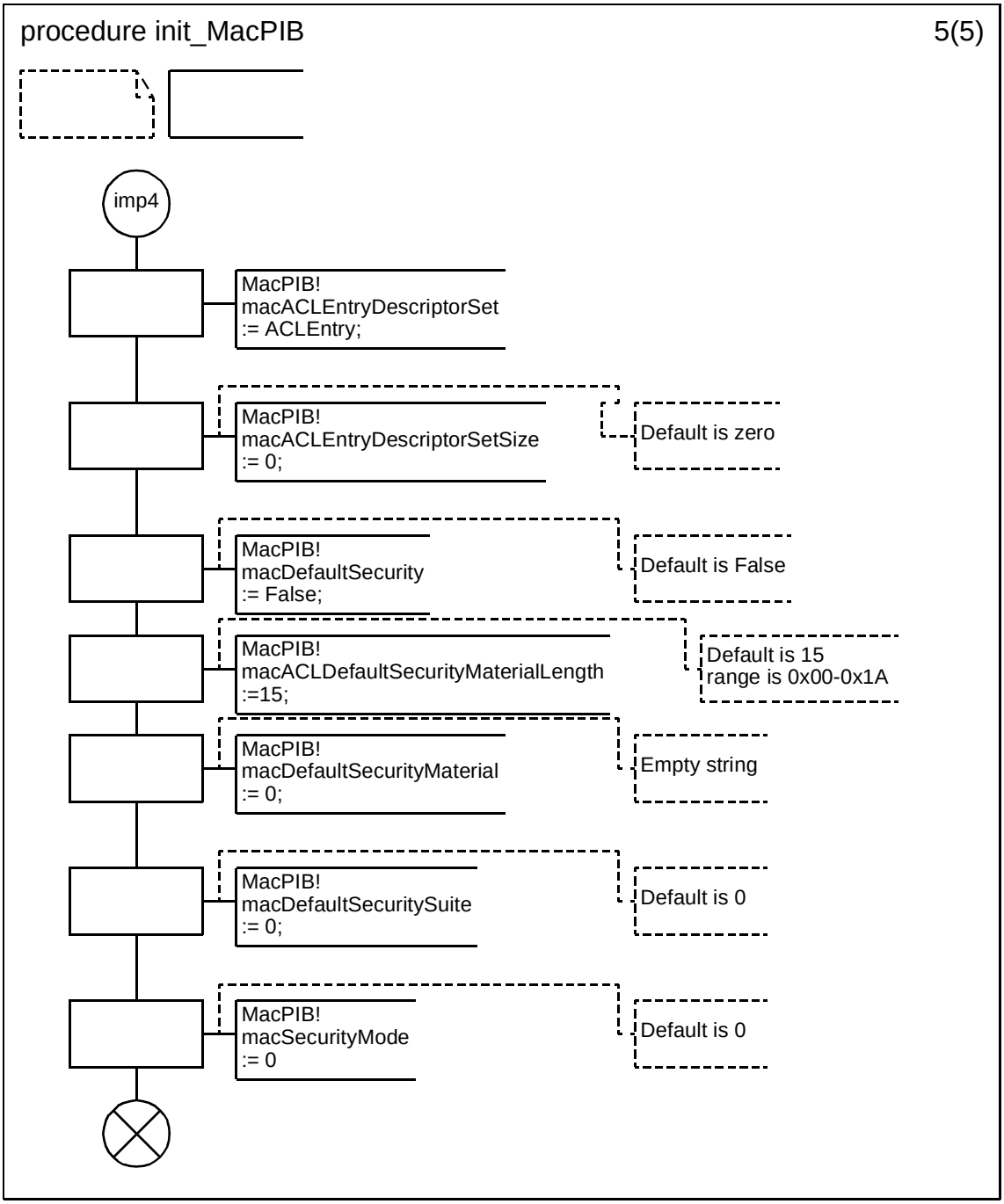


Copyright © 2003 IEEE. All rights reserved.

Authorized licensed use limited to: IEEE - Staff. Downloaded on October 28,2024 at 20:20:02 UTC from IEEE Xplore. Restrictions apply.

INTEL-1011
U.S. Patent 8,219,129

### D.3.1.154.10 Procedure init_MACCon (1)

.

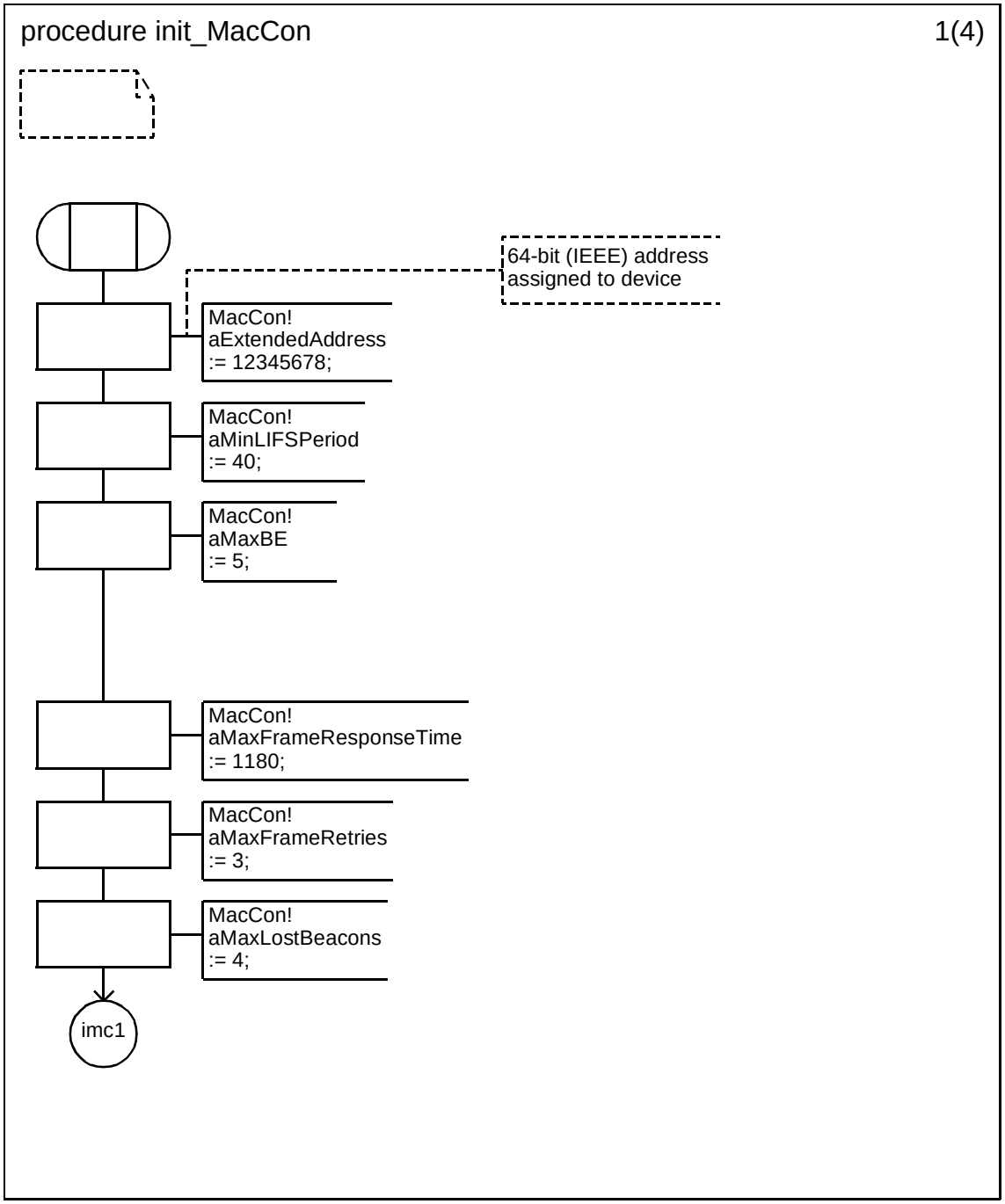



Copyright © 2003 IEEE. All rights reserved.
Authorized licensed use limited to: IEEE - Staff. Downloaded on October 28,2024 at 20:20:02 UTC from IEEE Xplore. Restrictions apply.

INTEL-1011
U.S. Patent 8,219,129

### D.3.1.154.11 Procedure init_MACCon (2)

.

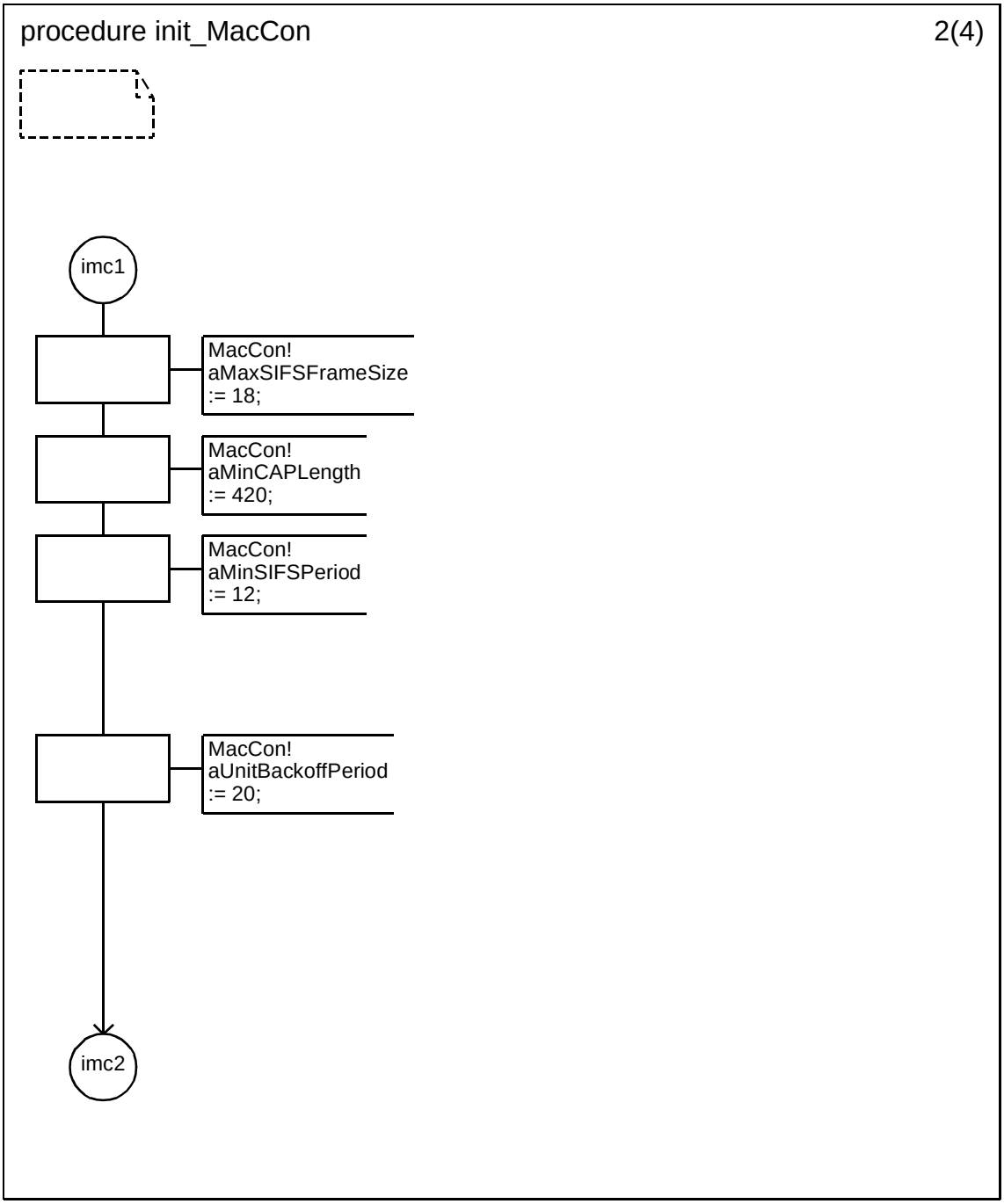


Copyright © 2003 IEEE. All rights reserved.

Authorized licensed use limited to: IEEE - Staff. Downloaded on October 28,2024 at 20:20:02 UTC from IEEE Xplore. Restrictions apply.

INTEL-1011
U.S. Patent 8,219,129

### D.3.1.154.12 Procedure init_MACCon (3)

.

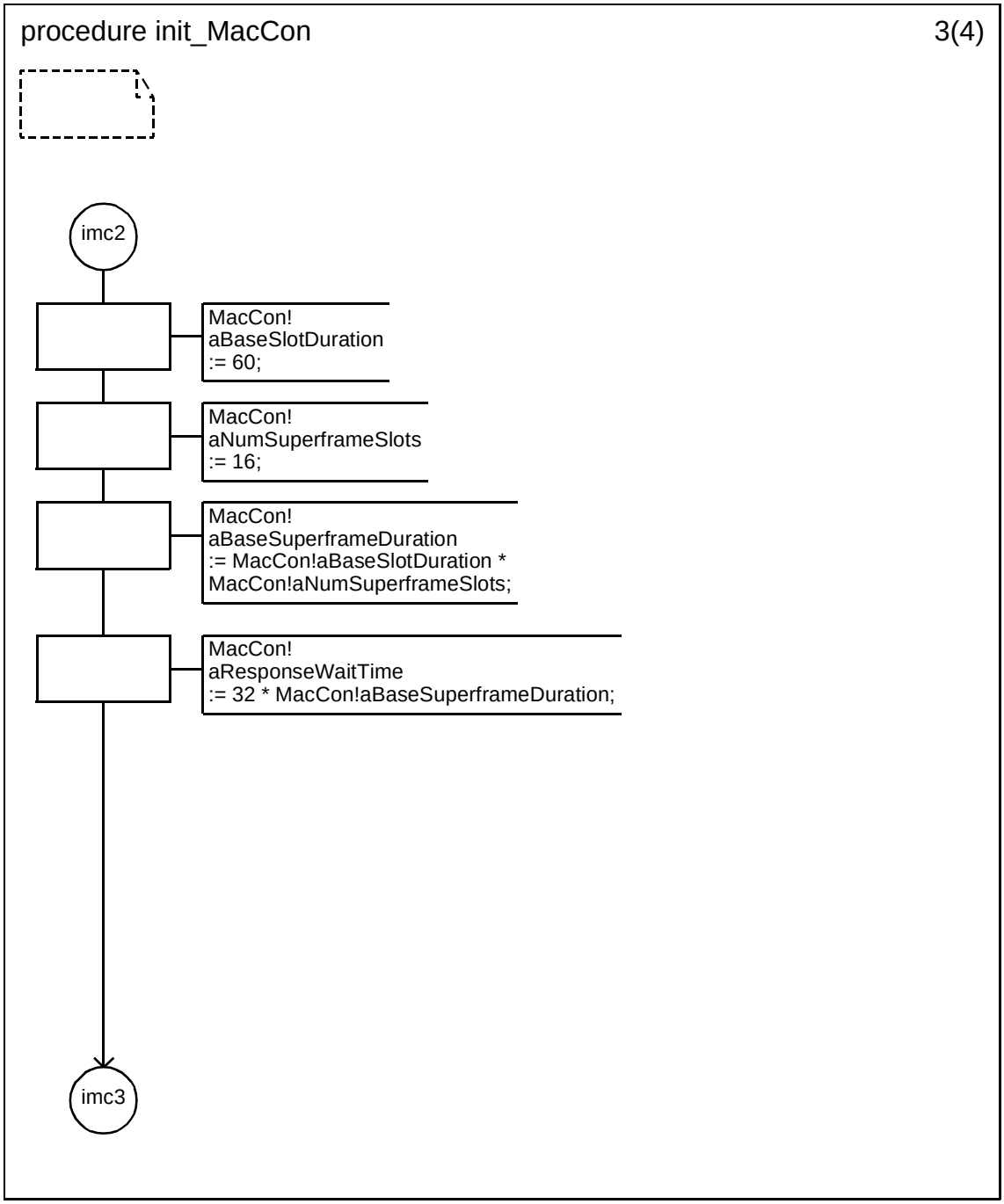



Copyright © 2003 IEEE. All rights reserved.
Authorized licensed use limited to: IEEE - Staff. Downloaded on October 28,2024 at 20:20:02 UTC from IEEE Xplore. Restrictions apply.

INTEL-1011
U.S. Patent 8,219,129

### D.3.1.154.13 Procedure init_MACCon (4)

.

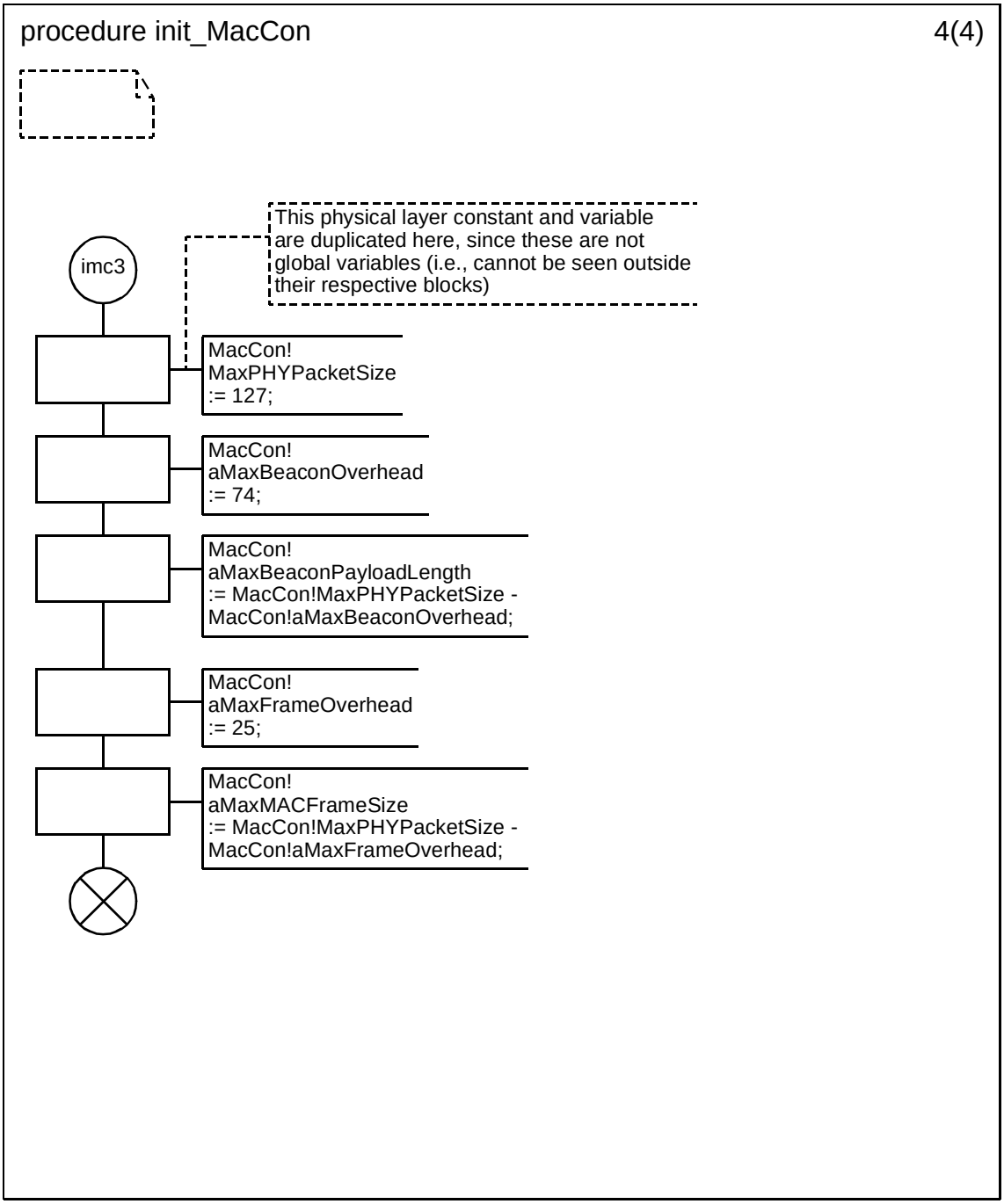


Copyright © 2003 IEEE. All rights reserved.

Authorized licensed use limited to: IEEE - Staff. Downloaded on October 28,2024 at 20:20:02 UTC from IEEE Xplore. Restrictions apply.

INTEL-1011
U.S. Patent 8,219,129

### D.3.1.154.14 Procedure init_GTS_db

.

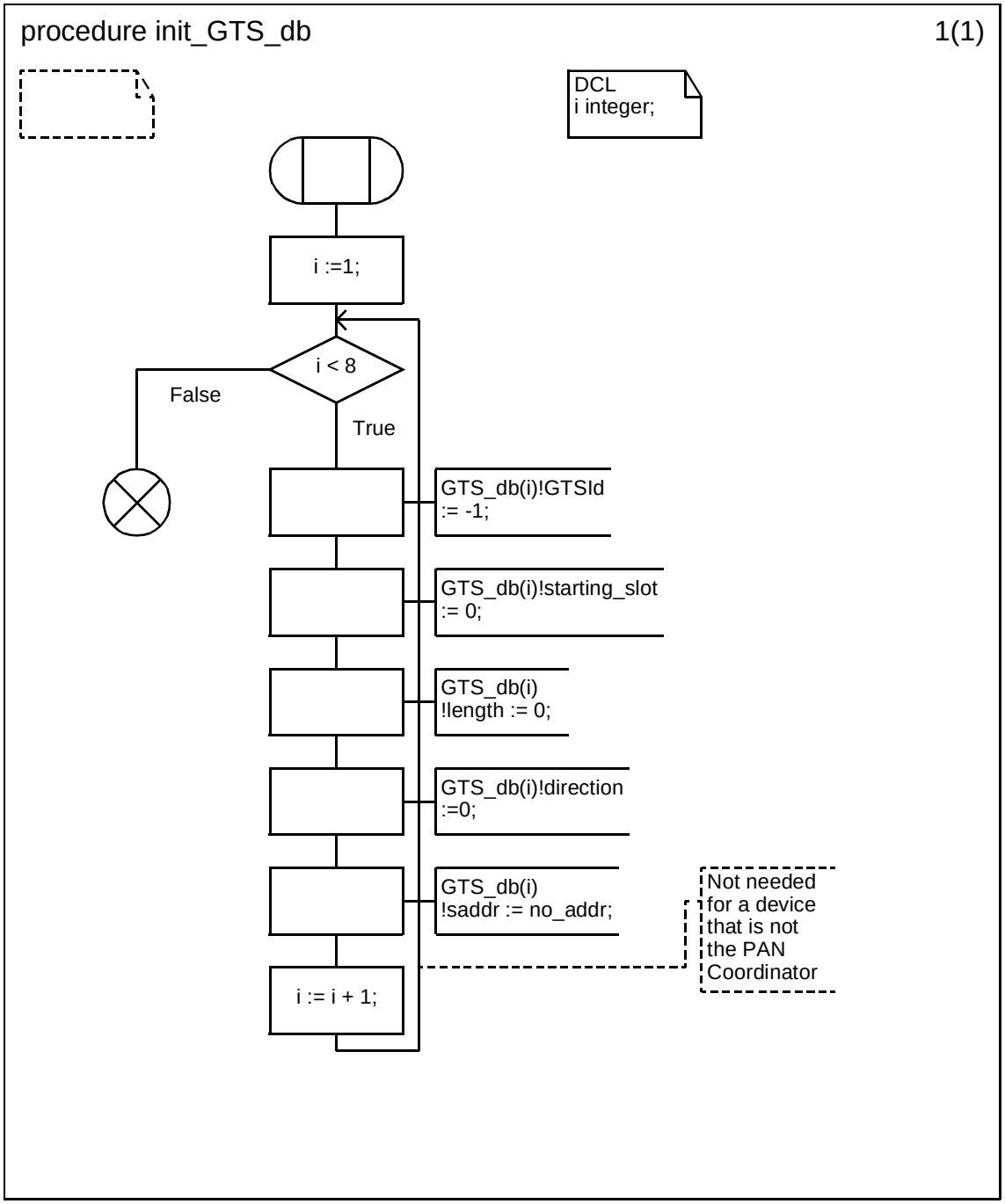



Copyright © 2003 IEEE. All rights reserved.
Authorized licensed use limited to: IEEE - Staff. Downloaded on October 28,2024 at 20:20:02 UTC from IEEE Xplore. Restrictions apply.

INTEL-1011
U.S. Patent 8,219,129

### D.3.1.154.15 Procedure create_Acknowledgement (1)

.

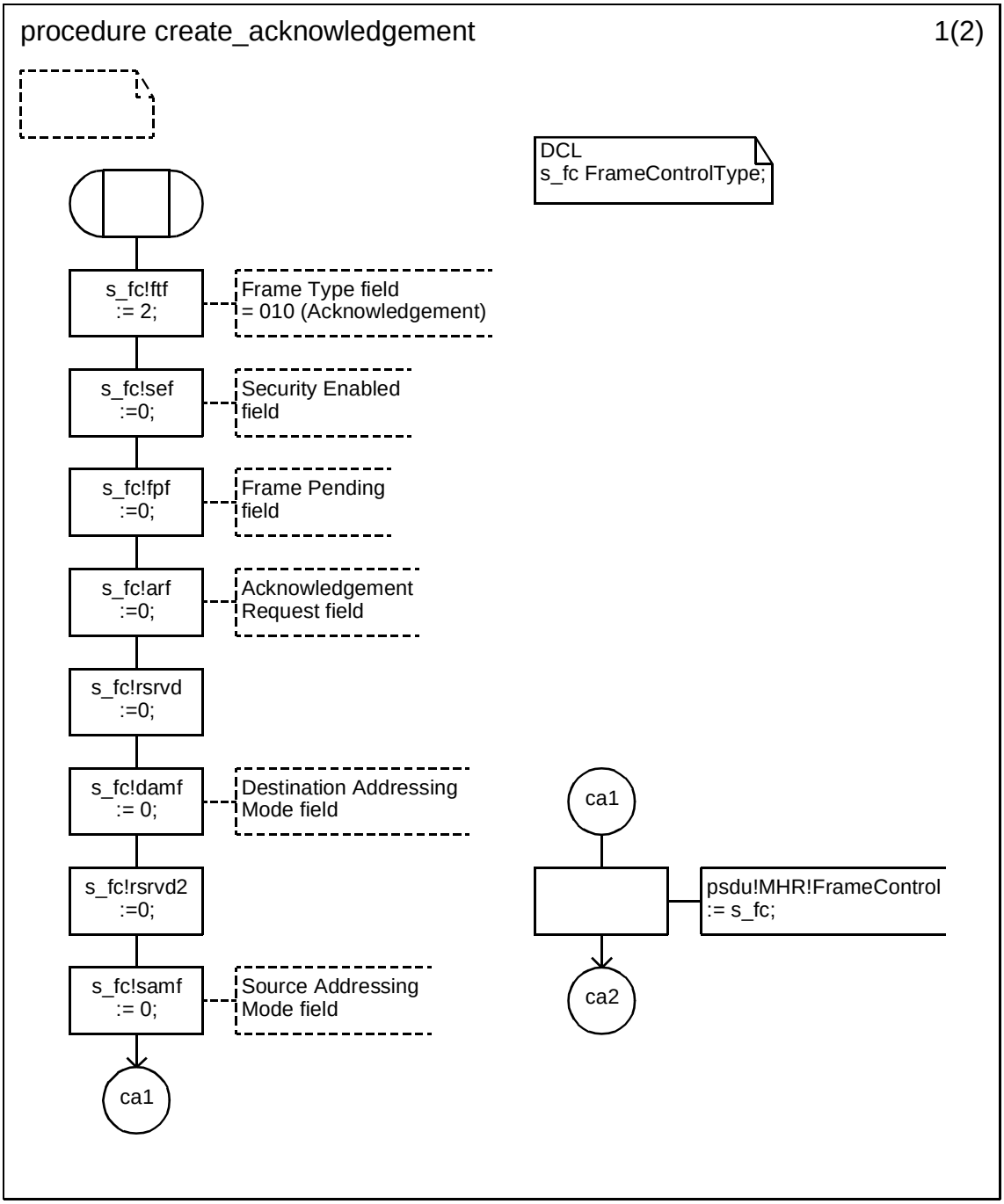


Copyright © 2003 IEEE. All rights reserved.

Authorized licensed use limited to: IEEE - Staff. Downloaded on October 28,2024 at 20:20:02 UTC from IEEE Xplore. Restrictions apply.

INTEL-1011
U.S. Patent 8,219,129

**D.3.1.154.16 Procedure create_Acknowledgement (2)**

.

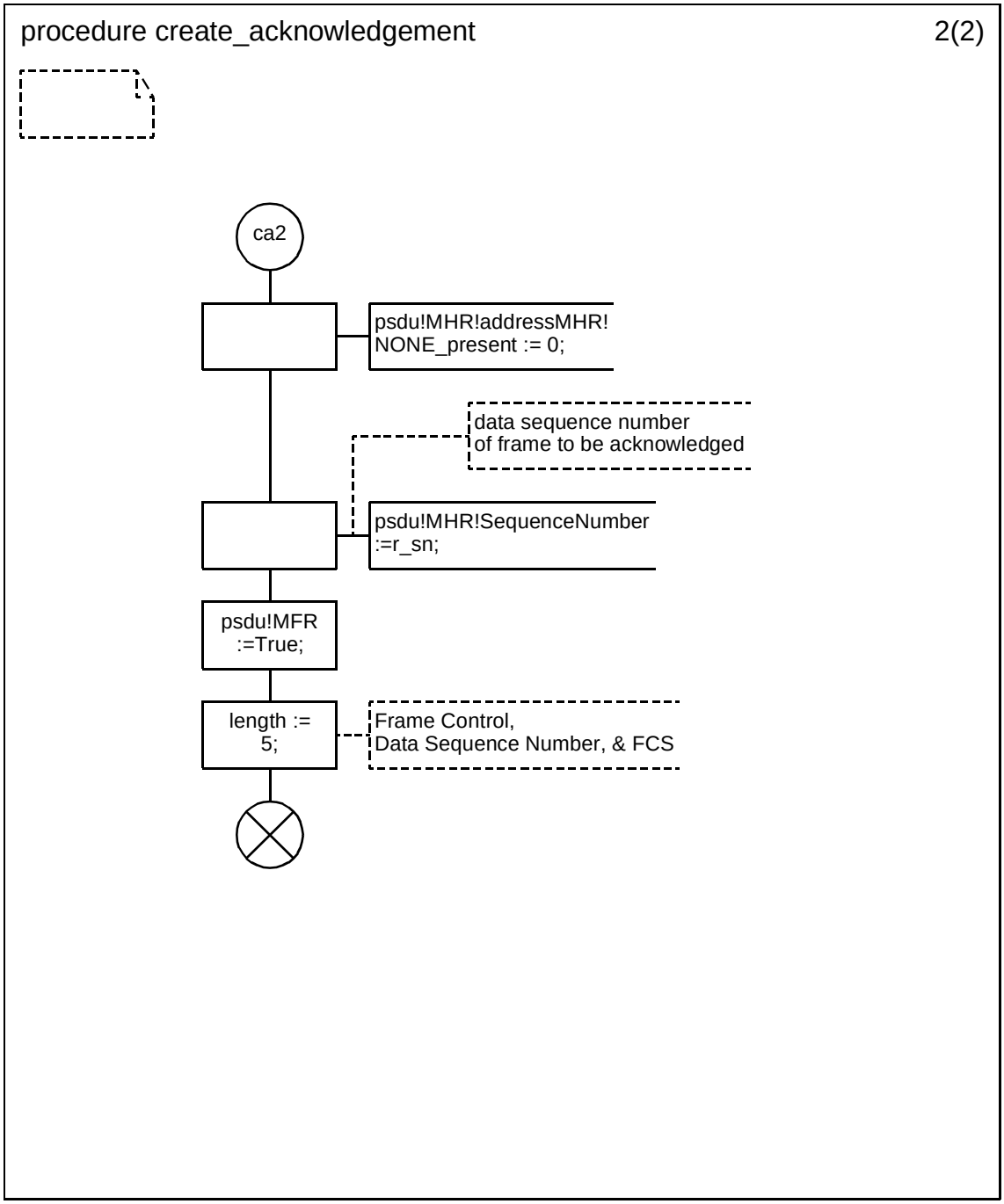



Copyright © 2003 IEEE. All rights reserved.
Authorized licensed use limited to: IEEE - Staff. Downloaded on October 28,2024 at 20:20:02 UTC from IEEE Xplore. Restrictions apply.

INTEL-1011
U.S. Patent 8,219,129

### D.3.1.154.17 Procedure create_beacon (1)

.

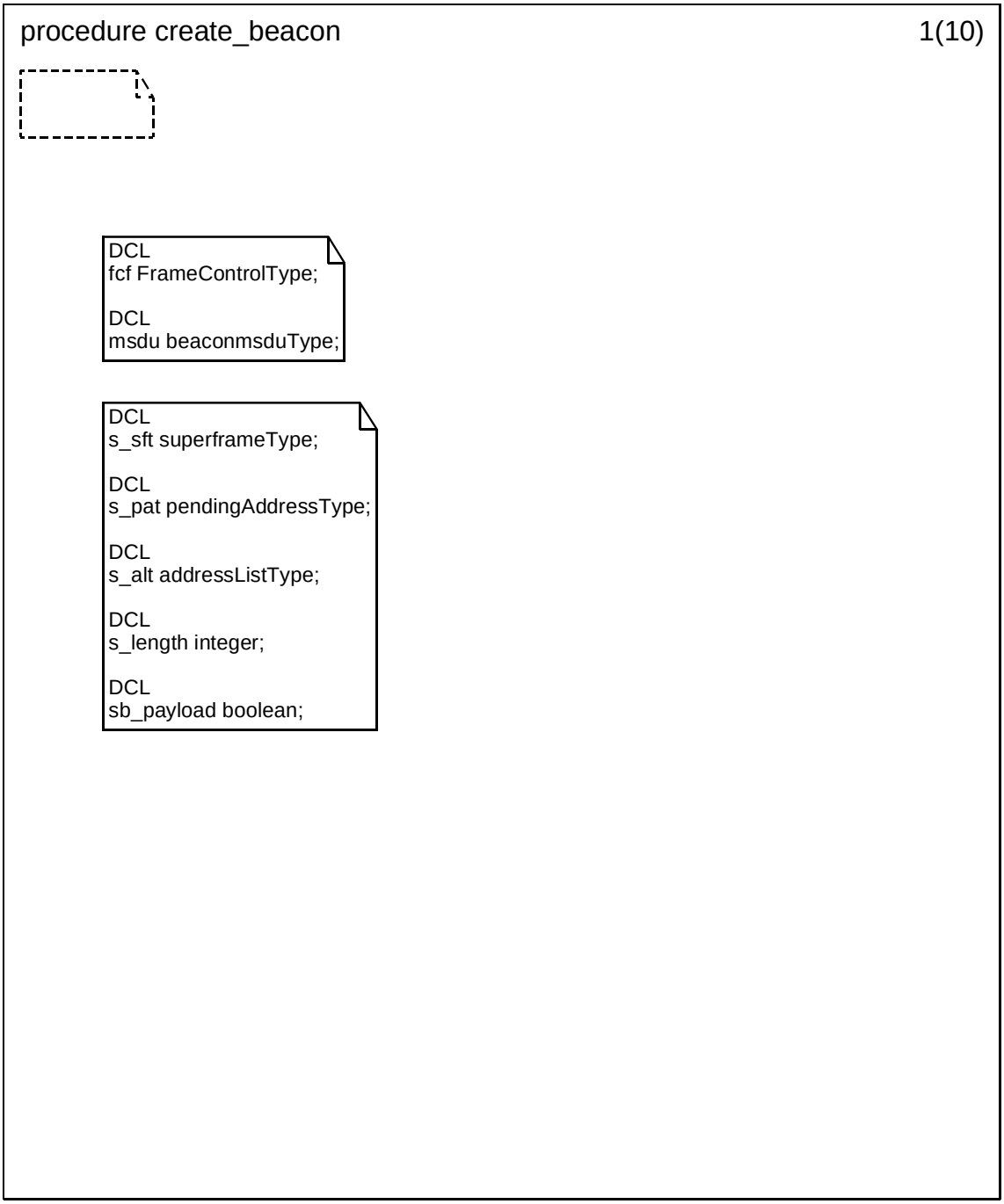


Copyright © 2003 IEEE. All rights reserved.

Authorized licensed use limited to: IEEE - Staff. Downloaded on October 28,2024 at 20:20:02 UTC from IEEE Xplore. Restrictions apply.

INTEL-1011
U.S. Patent 8,219,129

**D.3.1.154.18 Procedure create_beacon (2)**

.

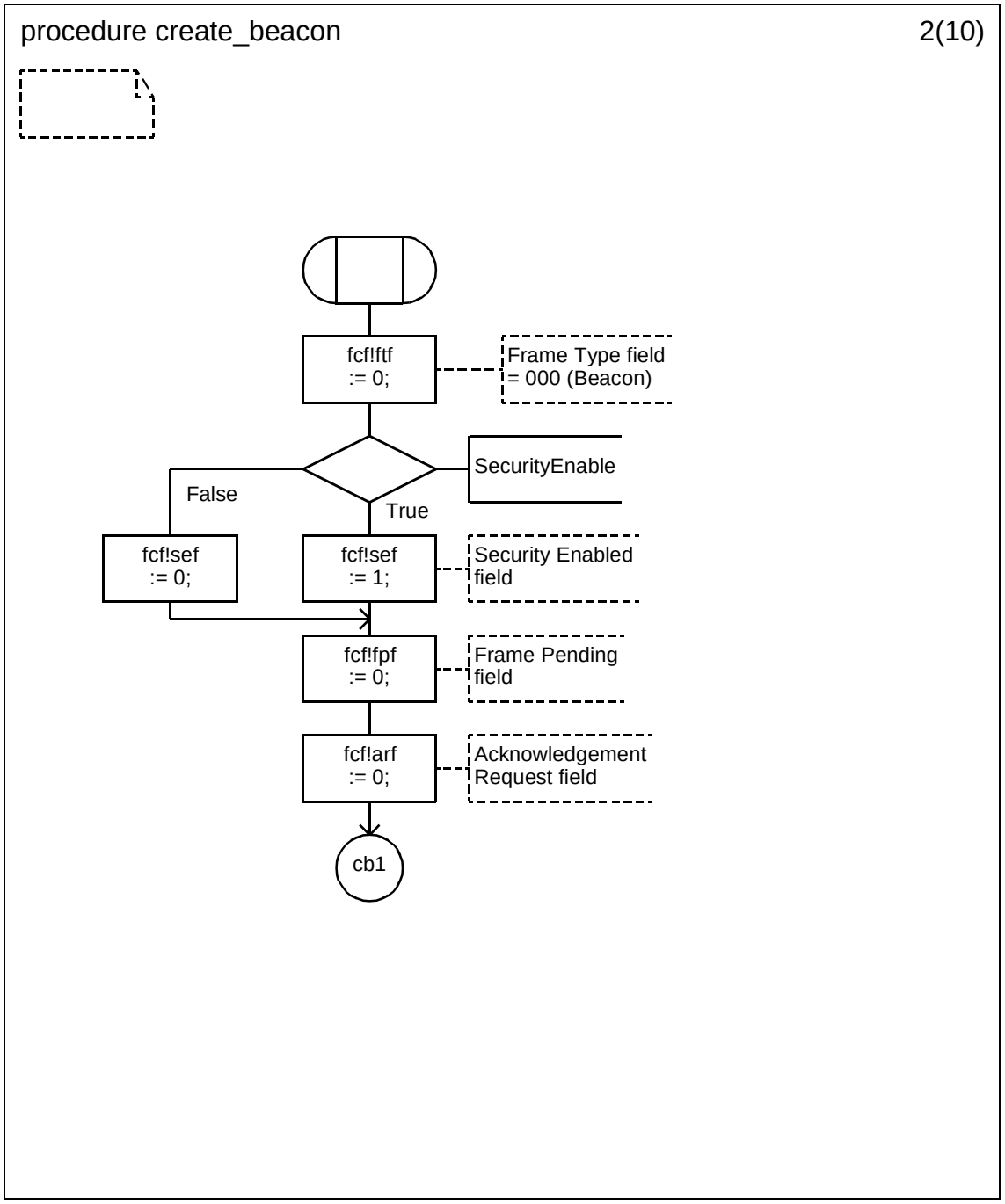



Copyright © 2003 IEEE. All rights reserved.
Authorized licensed use limited to: IEEE - Staff. Downloaded on October 28,2024 at 20:20:02 UTC from IEEE Xplore. Restrictions apply.

INTEL-1011
U.S. Patent 8,219,129

**D.3.1.154.19 Procedure create_beacon (3)**

.

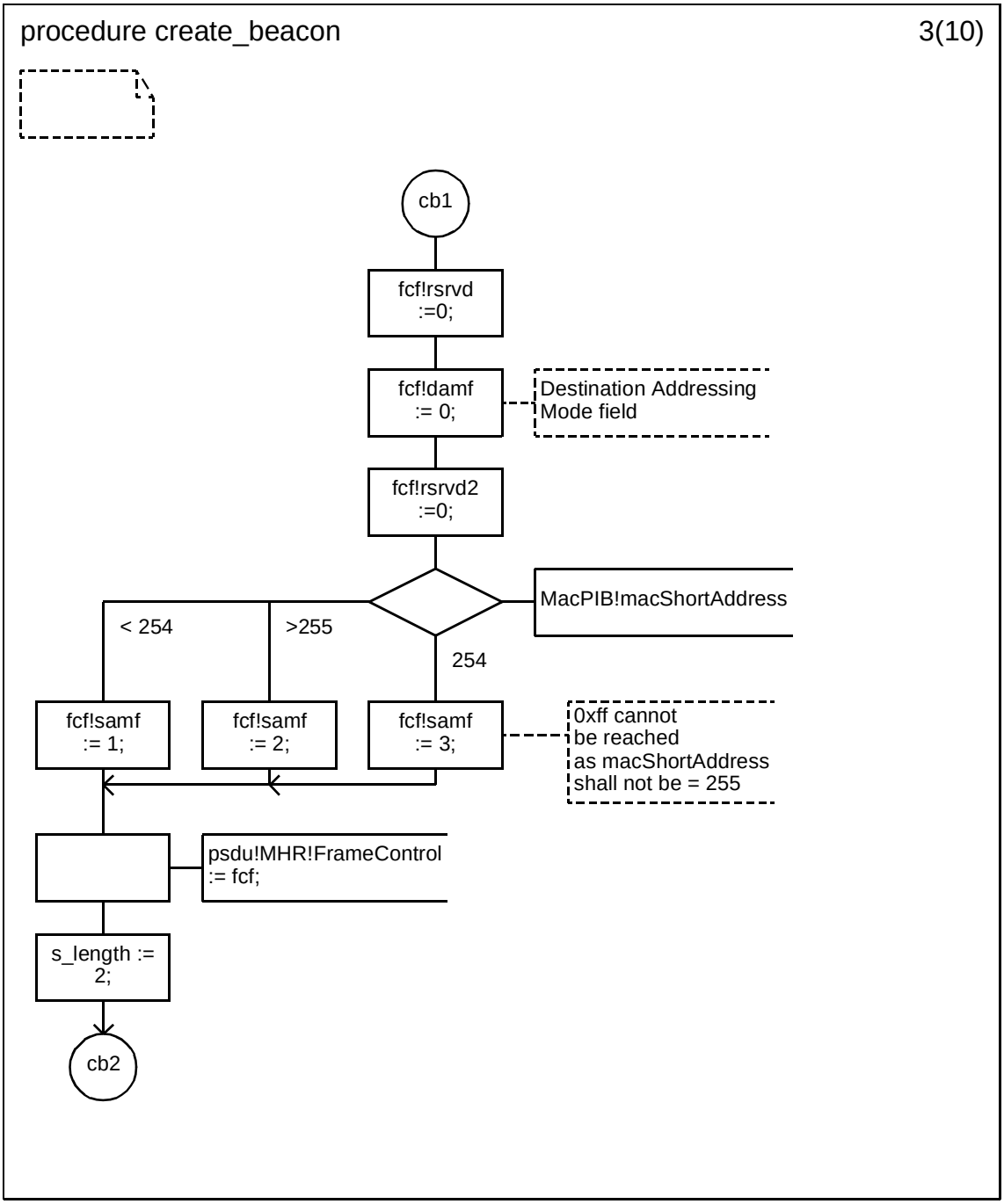


Copyright © 2003 IEEE. All rights reserved.

Authorized licensed use limited to: IEEE - Staff. Downloaded on October 28,2024 at 20:20:02 UTC from IEEE Xplore. Restrictions apply.

INTEL-1011
U.S. Patent 8,219,129

**D.3.1.154.20 Procedure create_beacon (4)**

.

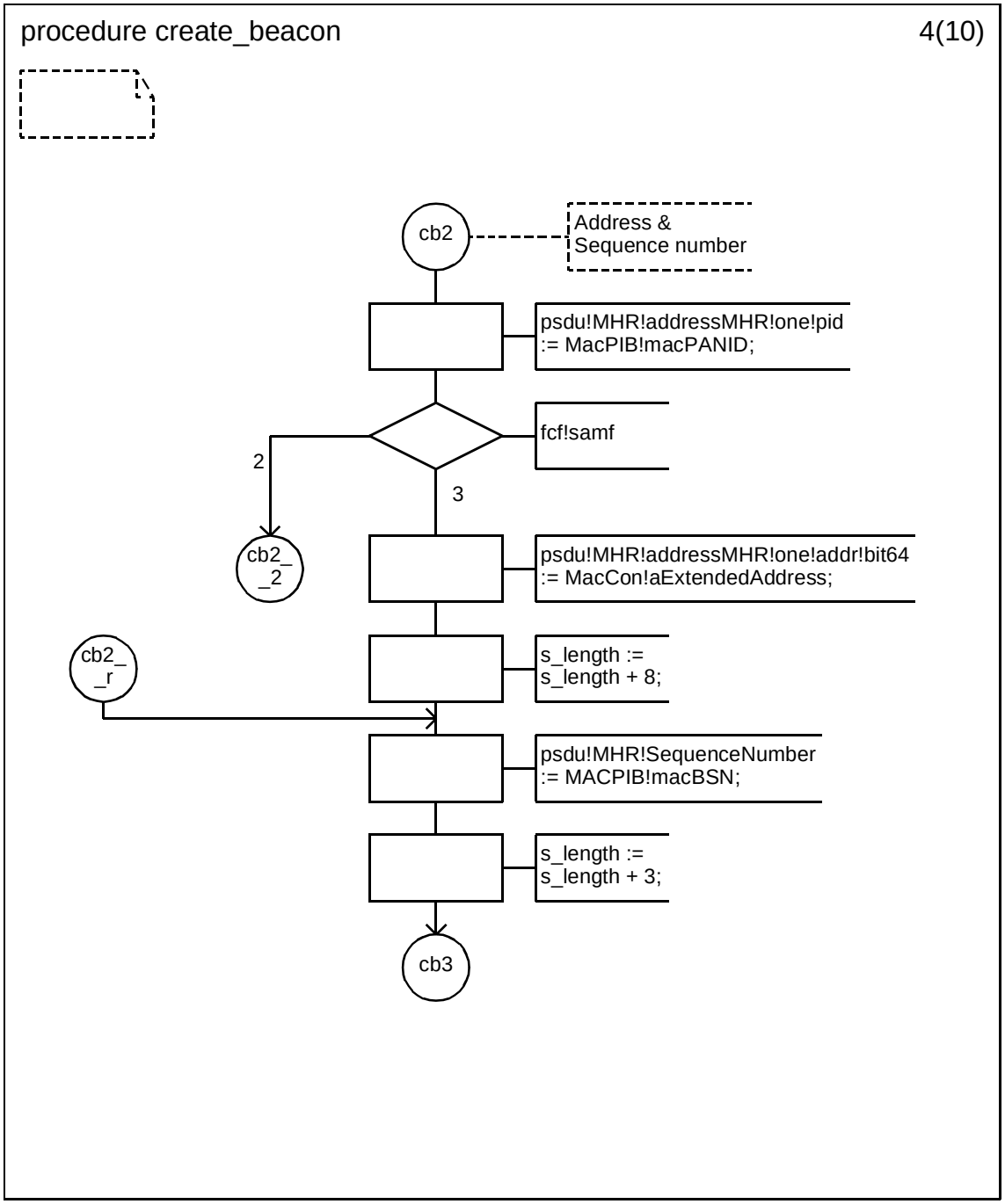



Copyright © 2003 IEEE. All rights reserved.
Authorized licensed use limited to: IEEE - Staff. Downloaded on October 28,2024 at 20:20:02 UTC from IEEE Xplore. Restrictions apply.

INTEL-1011
U.S. Patent 8,219,129

### D.3.1.154.21 Procedure create_beacon (5)

.

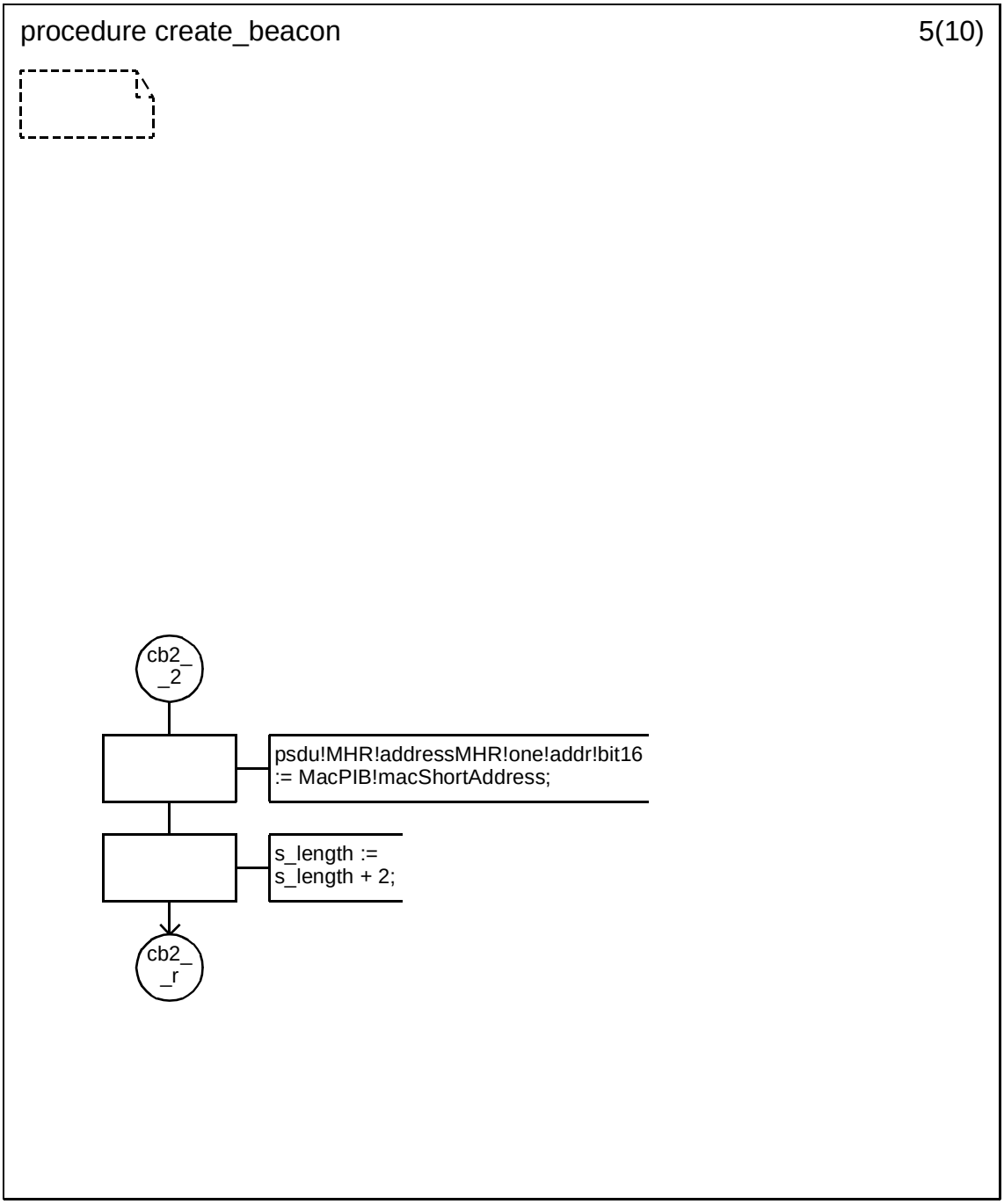


Copyright © 2003 IEEE. All rights reserved.

Authorized licensed use limited to: IEEE - Staff. Downloaded on October 28,2024 at 20:20:02 UTC from IEEE Xplore. Restrictions apply.

INTEL-1011
U.S. Patent 8,219,129

**D.3.1.154.22 Procedure create_beacon (6)**

.

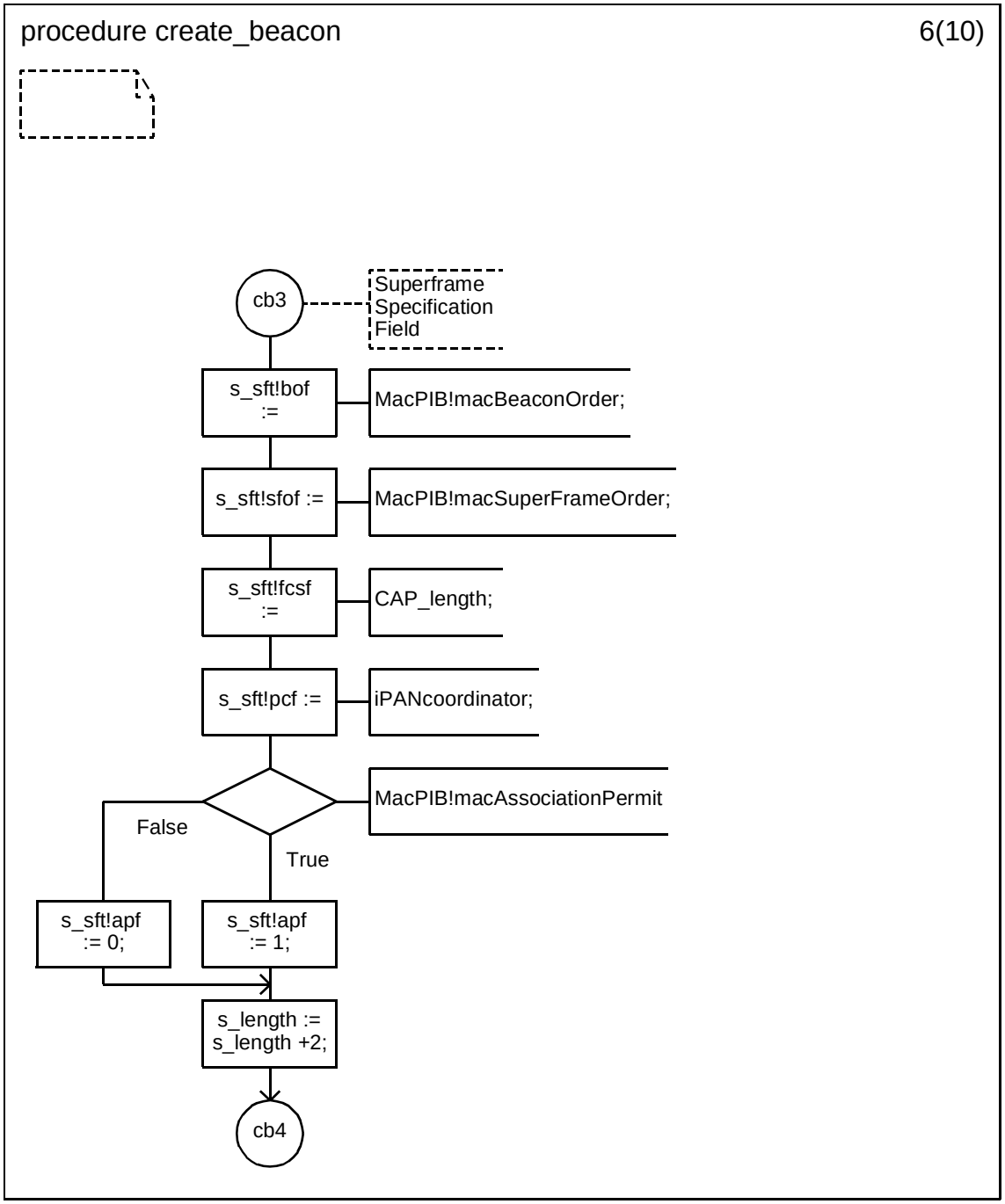



Copyright © 2003 IEEE. All rights reserved.
Authorized licensed use limited to: IEEE - Staff. Downloaded on October 28,2024 at 20:20:02 UTC from IEEE Xplore. Restrictions apply.

INTEL-1011
U.S. Patent 8,219,129

**D.3.1.154.23 Procedure create_beacon (7)**

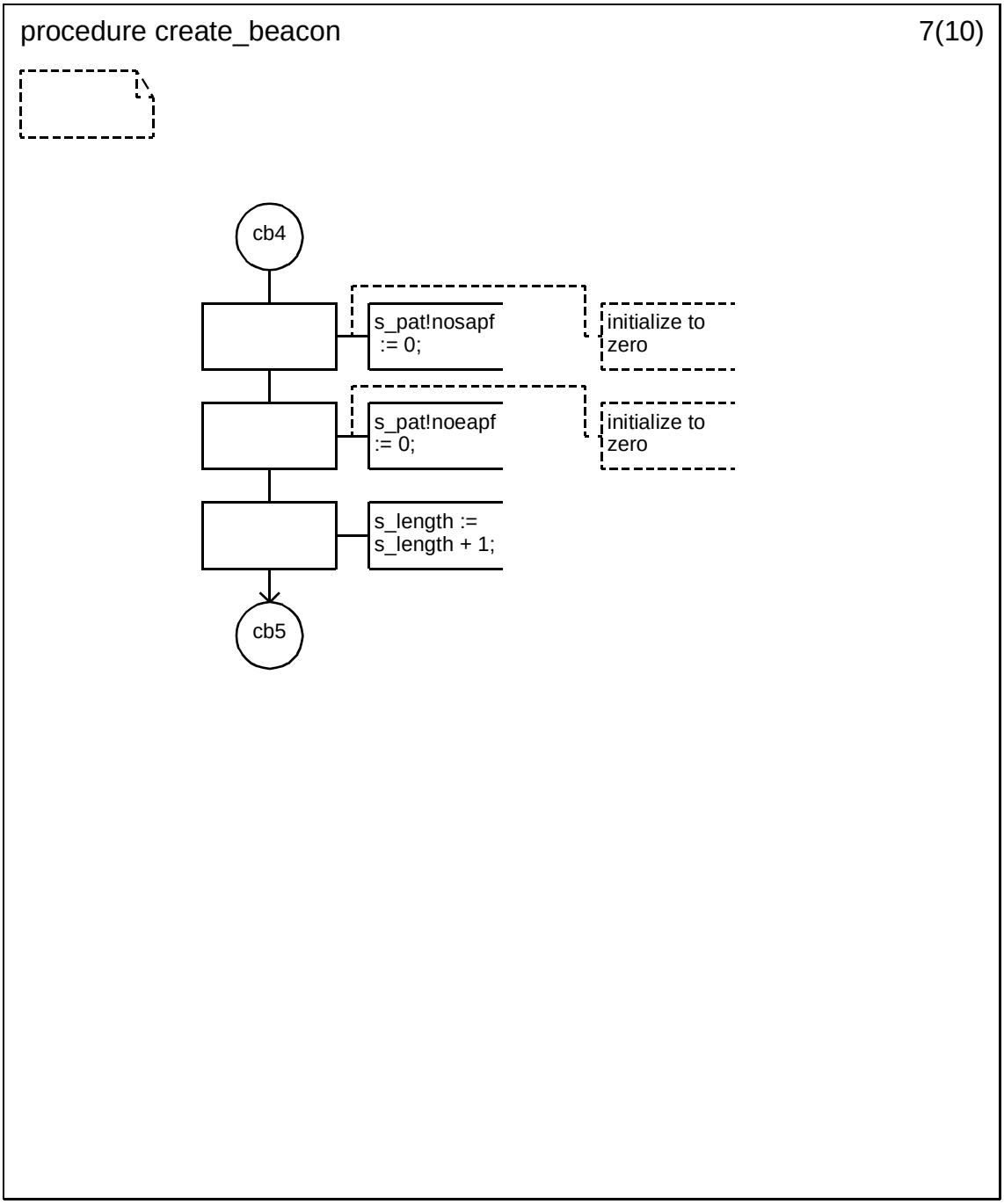


Copyright © 2003 IEEE. All rights reserved.

Authorized licensed use limited to: IEEE - Staff. Downloaded on October 28,2024 at 20:20:02 UTC from IEEE Xplore. Restrictions apply.

INTEL-1011
U.S. Patent 8,219,129

**D.3.1.154.24 Procedure create_beacon (8)**

.

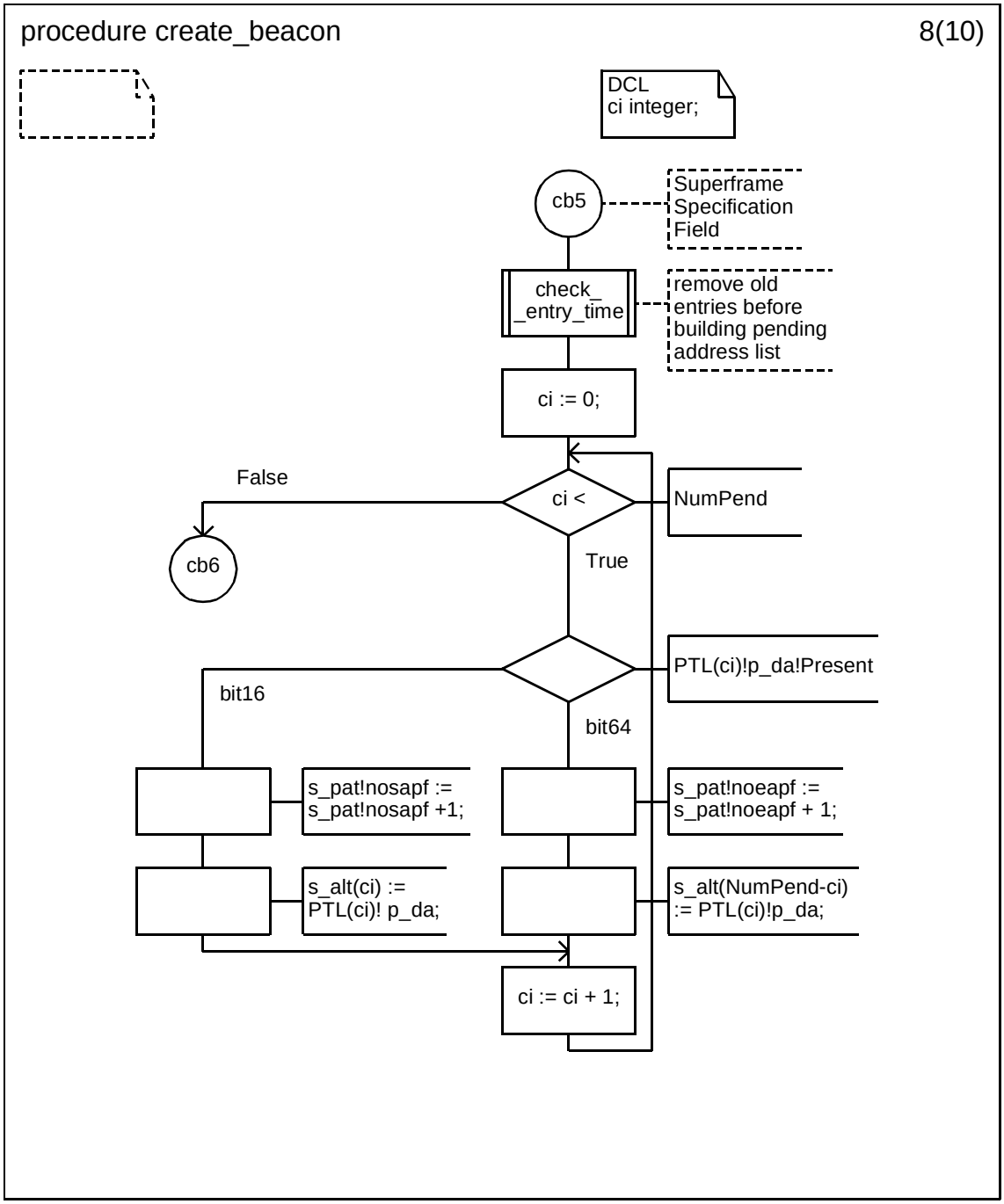



Copyright © 2003 IEEE. All rights reserved.
Authorized licensed use limited to: IEEE - Staff. Downloaded on October 28,2024 at 20:20:02 UTC from IEEE Xplore. Restrictions apply.

INTEL-1011
U.S. Patent 8,219,129

### D.3.1.154.25 Procedure create_beacon (9)

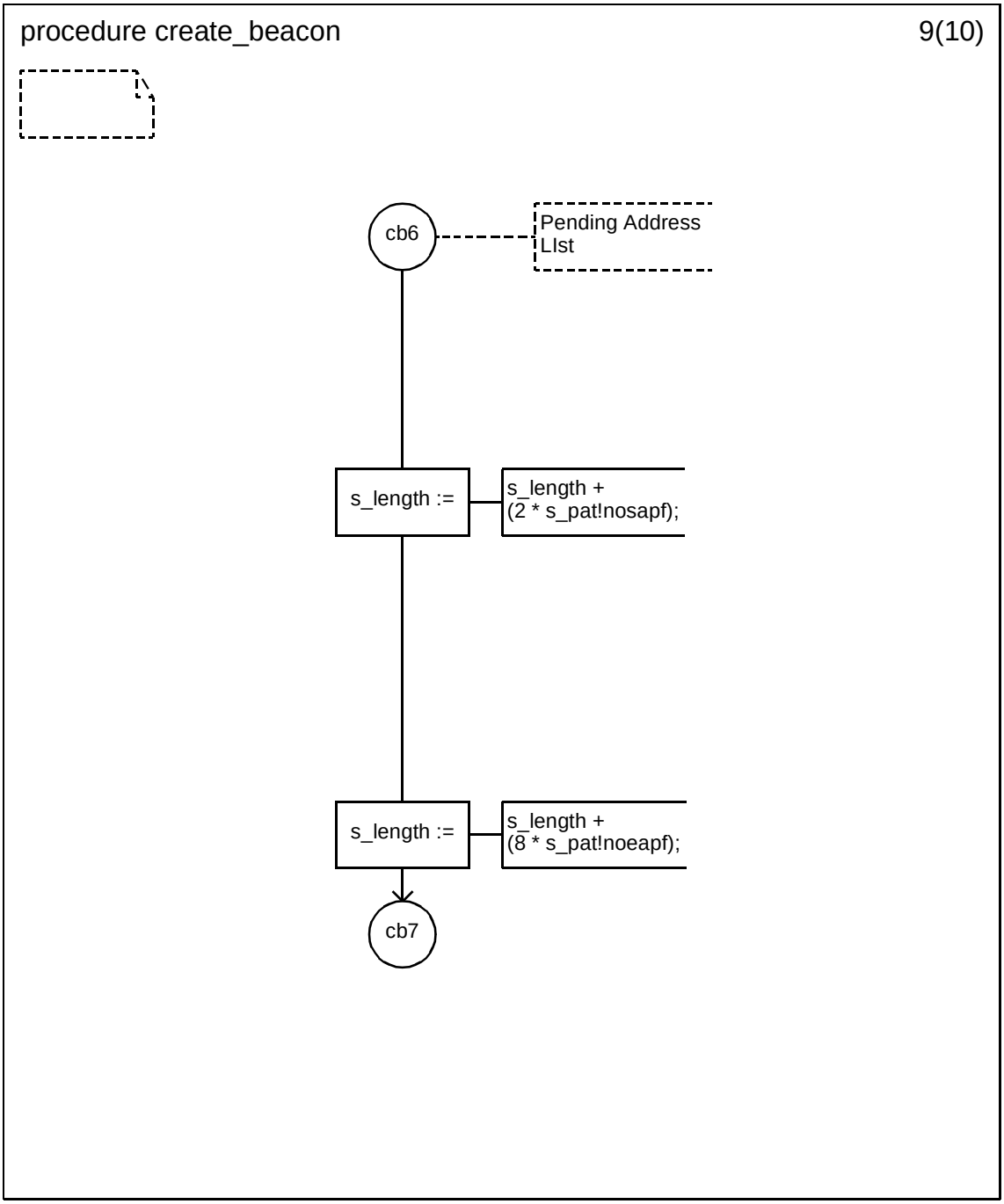


Copyright © 2003 IEEE. All rights reserved.

Authorized licensed use limited to: IEEE - Staff. Downloaded on October 28,2024 at 20:20:02 UTC from IEEE Xplore. Restrictions apply.

INTEL-1011
U.S. Patent 8,219,129

### D.3.1.154.26 Procedure create_beacon (10)

.

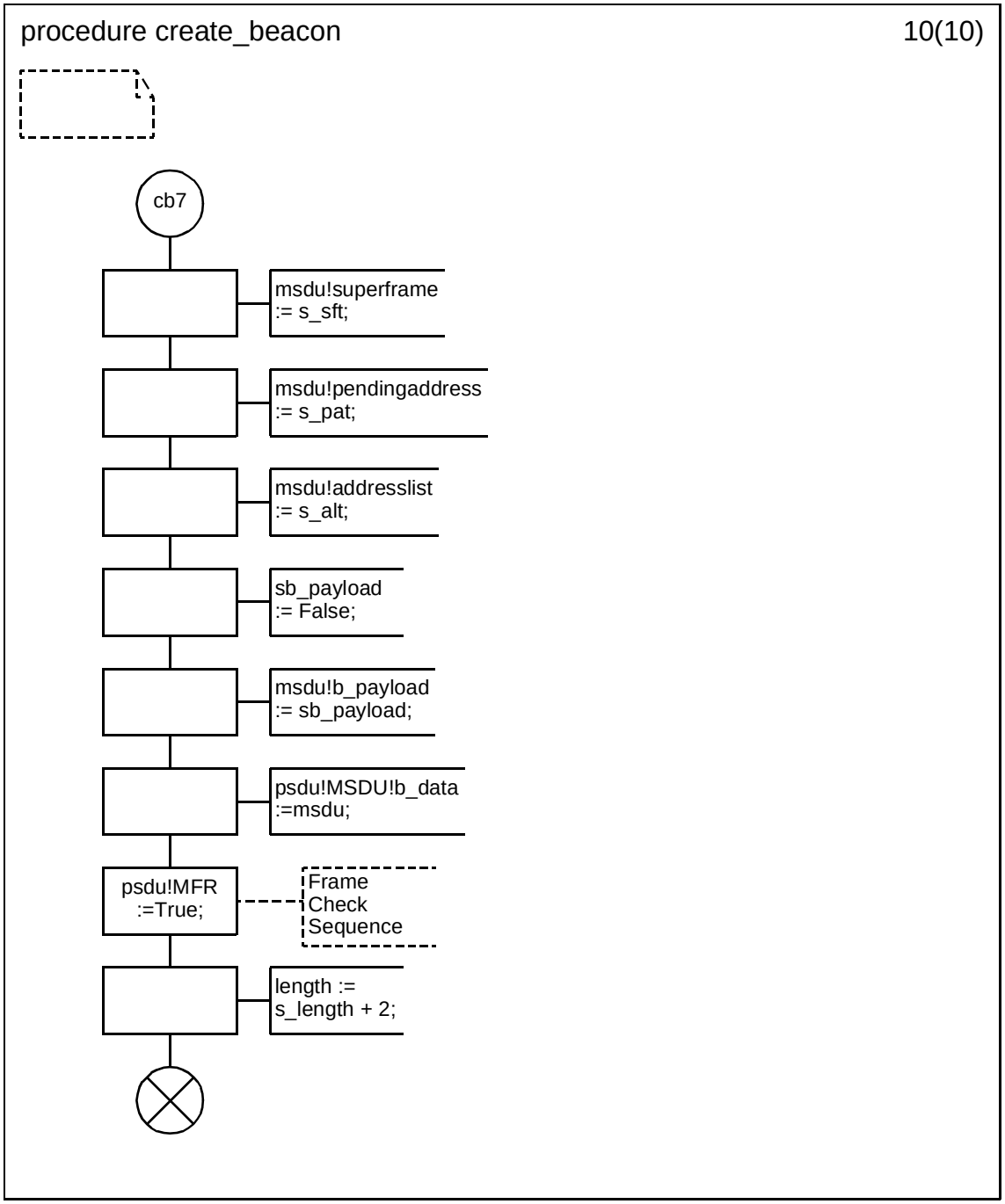



Copyright © 2003 IEEE. All rights reserved.
Authorized licensed use limited to: IEEE - Staff. Downloaded on October 28,2024 at 20:20:02 UTC from IEEE Xplore. Restrictions apply.

INTEL-1011
U.S. Patent 8,219,129

### D.3.1.154.27 Procedure create_data (1)

.

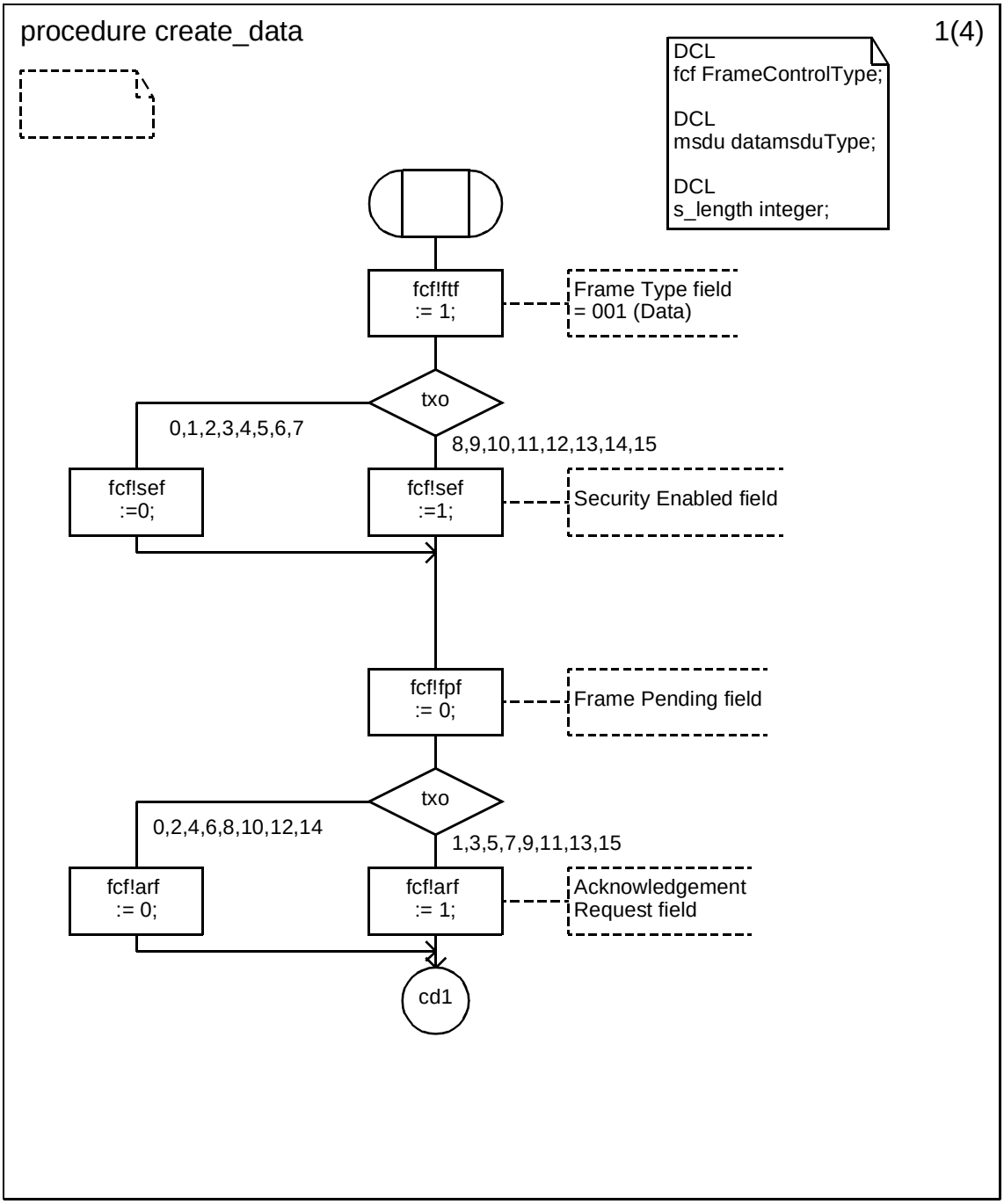


Copyright © 2003 IEEE. All rights reserved.

Authorized licensed use limited to: IEEE - Staff. Downloaded on October 28,2024 at 20:20:02 UTC from IEEE Xplore. Restrictions apply.

INTEL-1011
U.S. Patent 8,219,129

**D.3.1.154.28 Procedure create_data (2)**

.

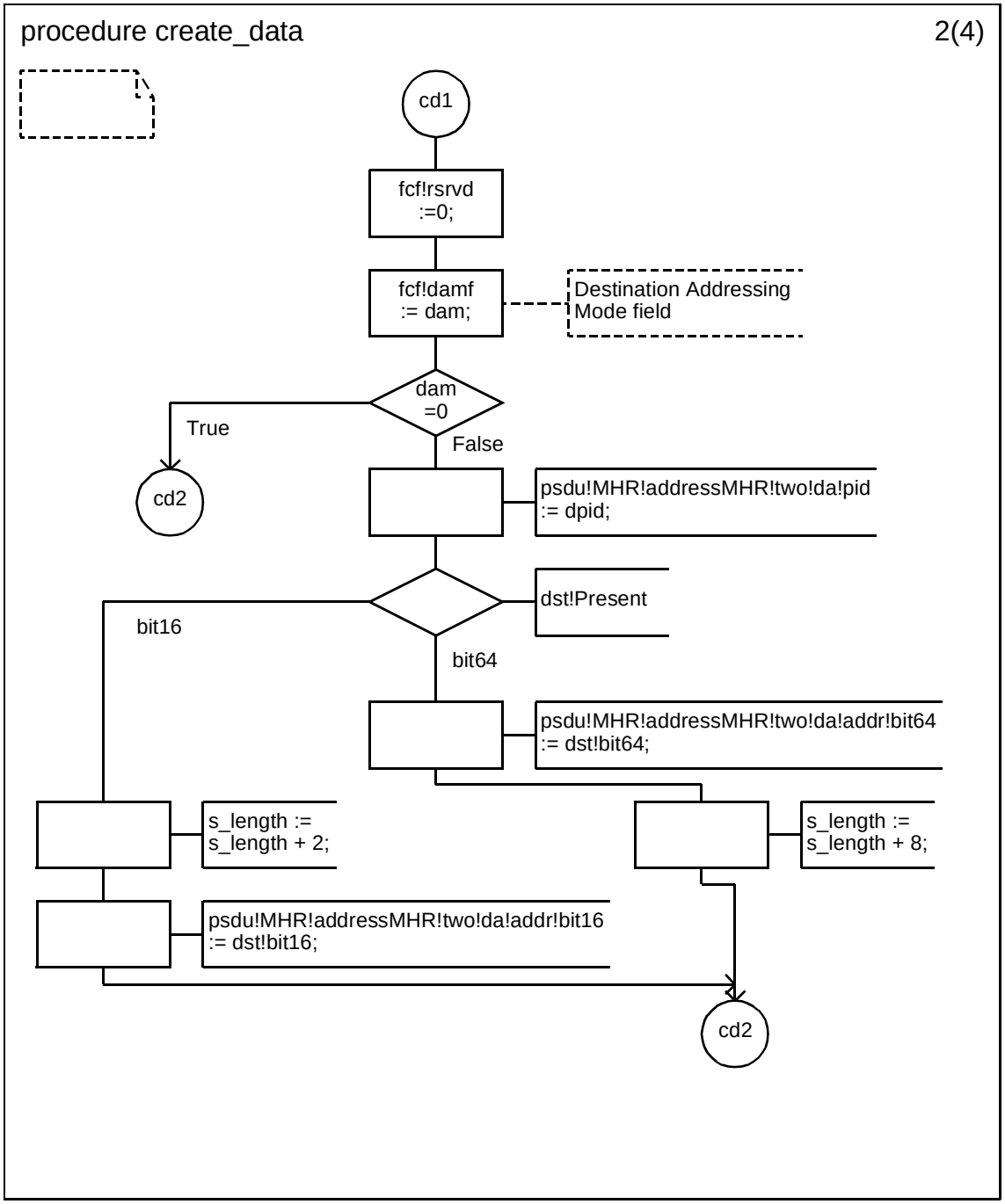



Copyright © 2003 IEEE. All rights reserved.
Authorized licensed use limited to: IEEE - Staff. Downloaded on October 28,2024 at 20:20:02 UTC from IEEE Xplore. Restrictions apply.

INTEL-1011
U.S. Patent 8,219,129

**D.3.1.154.29 Procedure create_data (3)**

.

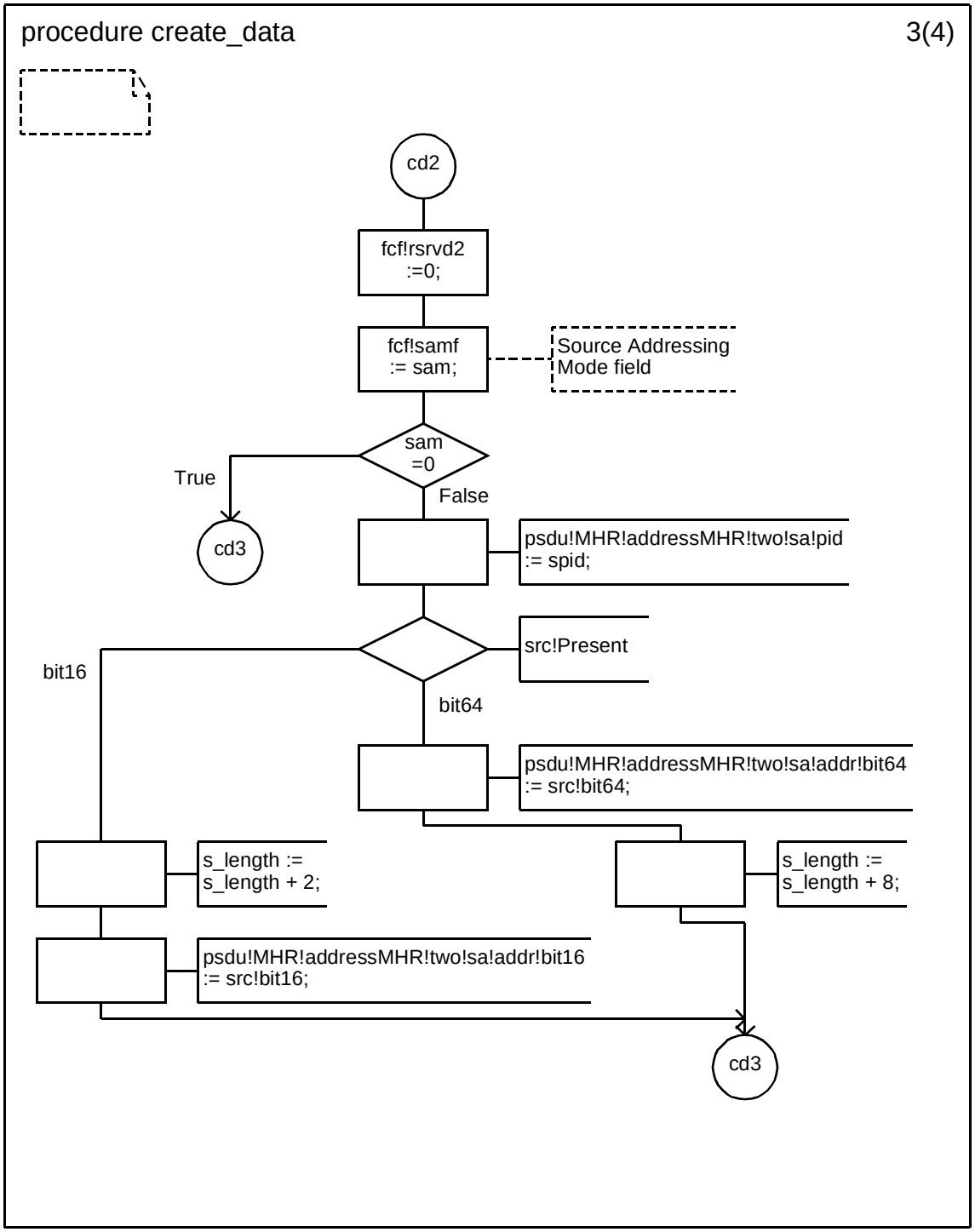


Copyright © 2003 IEEE. All rights reserved.

Authorized licensed use limited to: IEEE - Staff. Downloaded on October 28,2024 at 20:20:02 UTC from IEEE Xplore. Restrictions apply.

INTEL-1011
U.S. Patent 8,219,129

**D.3.1.154.30 Procedure create_data (4)**

.

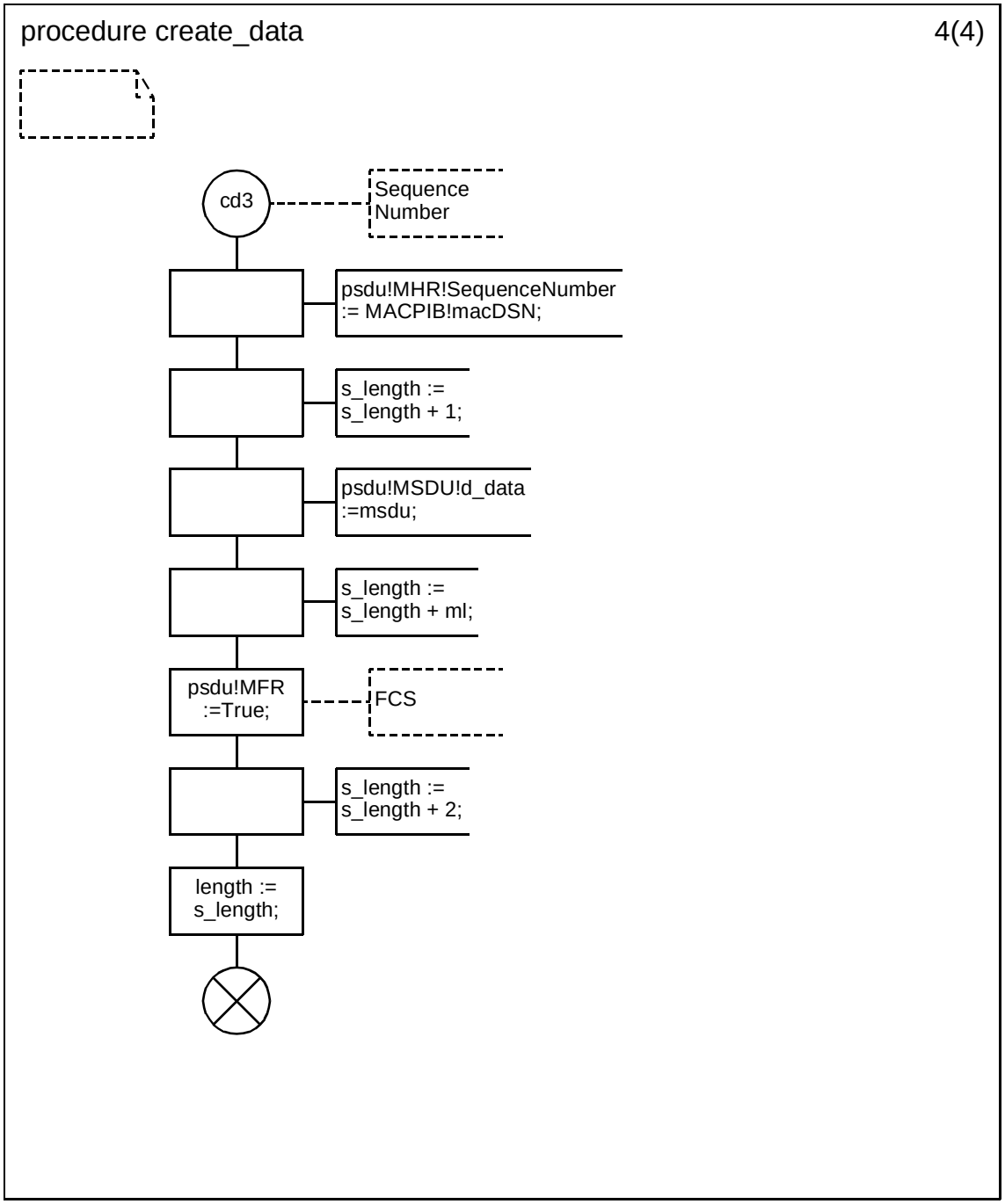



Copyright © 2003 IEEE. All rights reserved.
Authorized licensed use limited to: IEEE - Staff. Downloaded on October 28,2024 at 20:20:02 UTC from IEEE Xplore. Restrictions apply.

INTEL-1011
U.S. Patent 8,219,129

**D.3.1.154.31 Procedure create_assoc_cmd (1)**

.

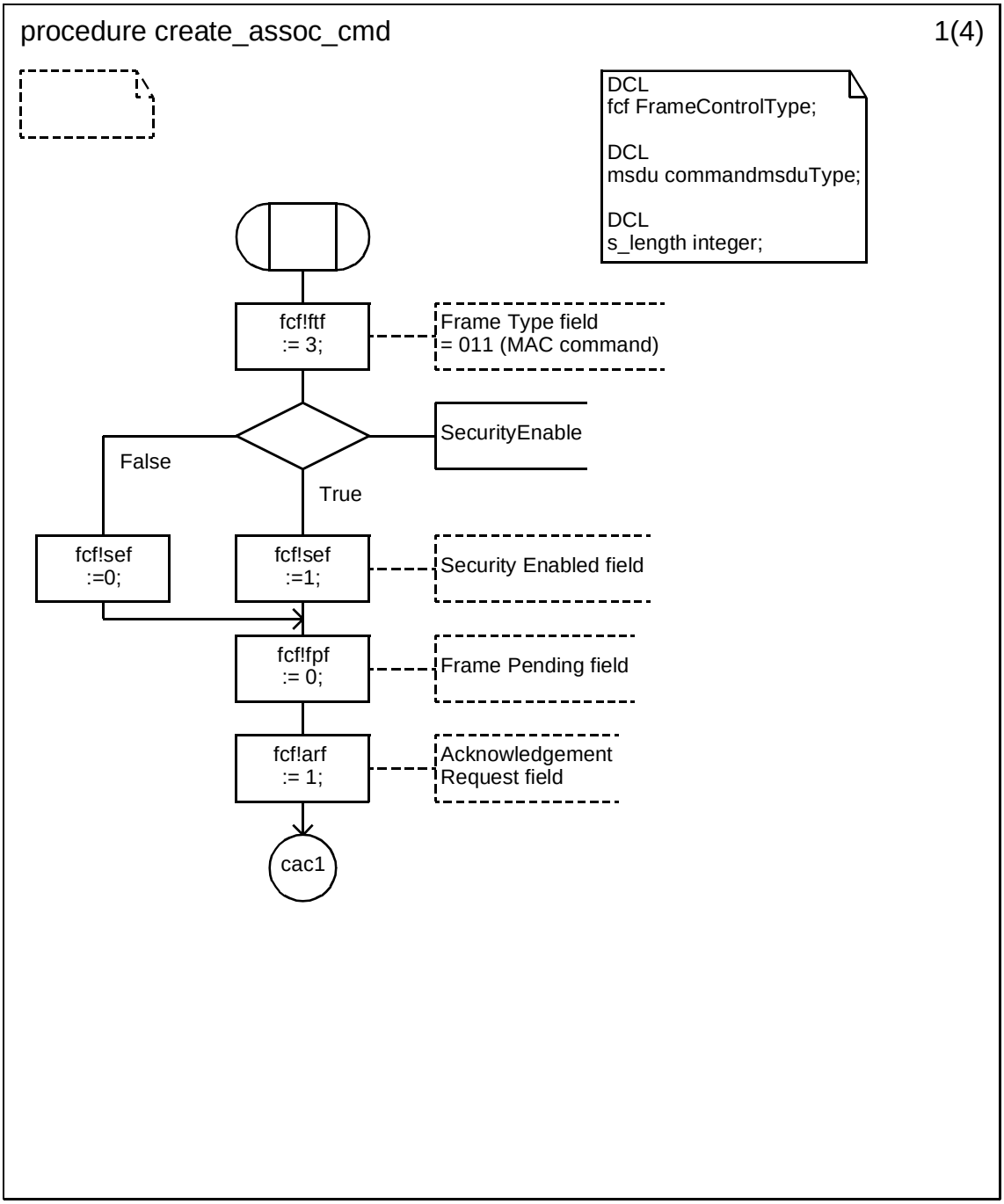


Copyright © 2003 IEEE. All rights reserved.

Authorized licensed use limited to: IEEE - Staff. Downloaded on October 28,2024 at 20:20:02 UTC from IEEE Xplore. Restrictions apply.

INTEL-1011
U.S. Patent 8,219,129

### D.3.1.154.32 Procedure create_assoc_cmd (2)

.

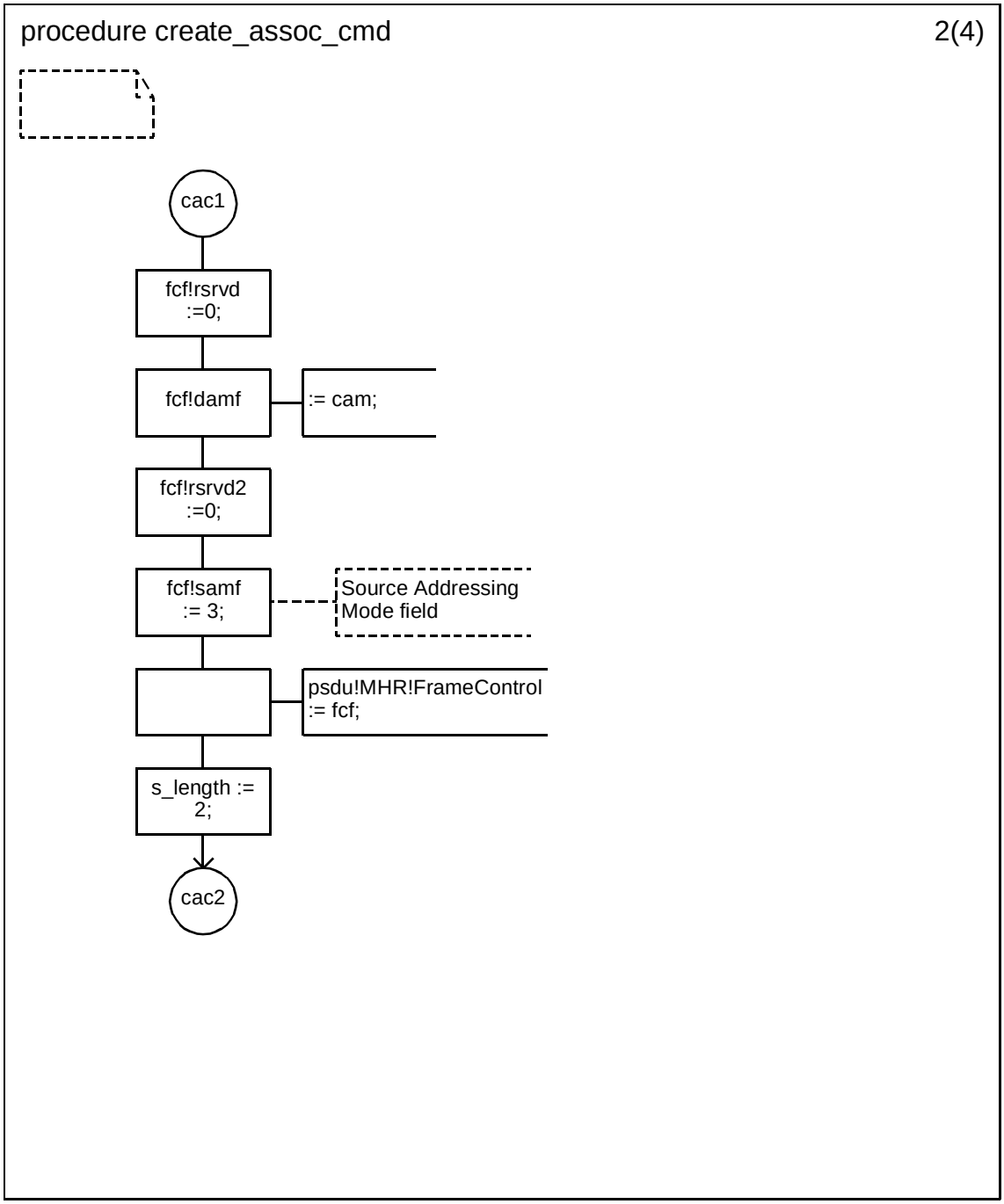



Copyright © 2003 IEEE. All rights reserved.
Authorized licensed use limited to: IEEE - Staff. Downloaded on October 28,2024 at 20:20:02 UTC from IEEE Xplore. Restrictions apply.

INTEL-1011
U.S. Patent 8,219,129

**D.3.1.154.33 Procedure create_assoc_cmd (3)**

.

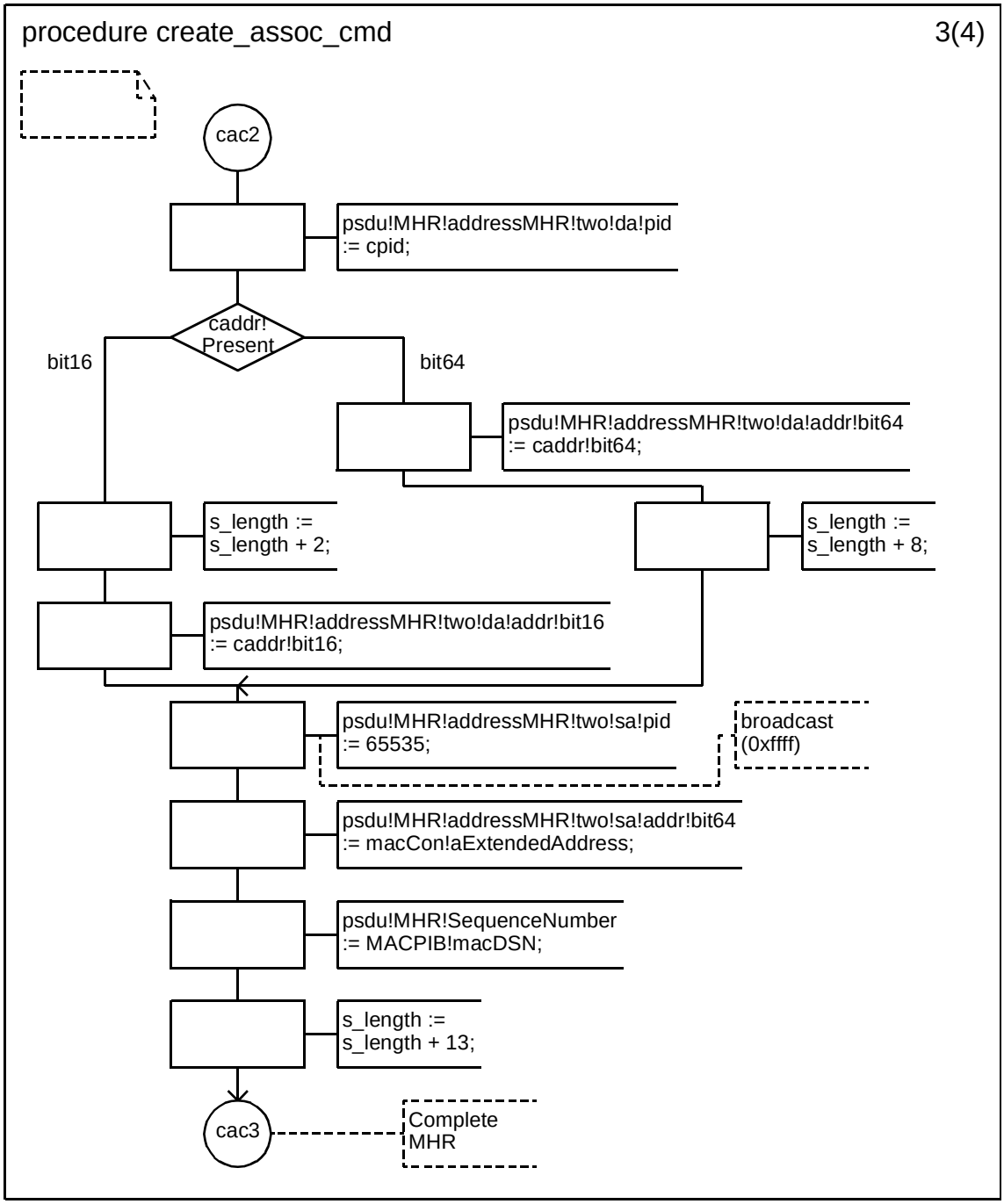


Copyright © 2003 IEEE. All rights reserved.

Authorized licensed use limited to: IEEE - Staff. Downloaded on October 28,2024 at 20:20:02 UTC from IEEE Xplore. Restrictions apply.

INTEL-1011
U.S. Patent 8,219,129

### D.3.1.154.34 Procedure create_assoc_cmd (4)

.

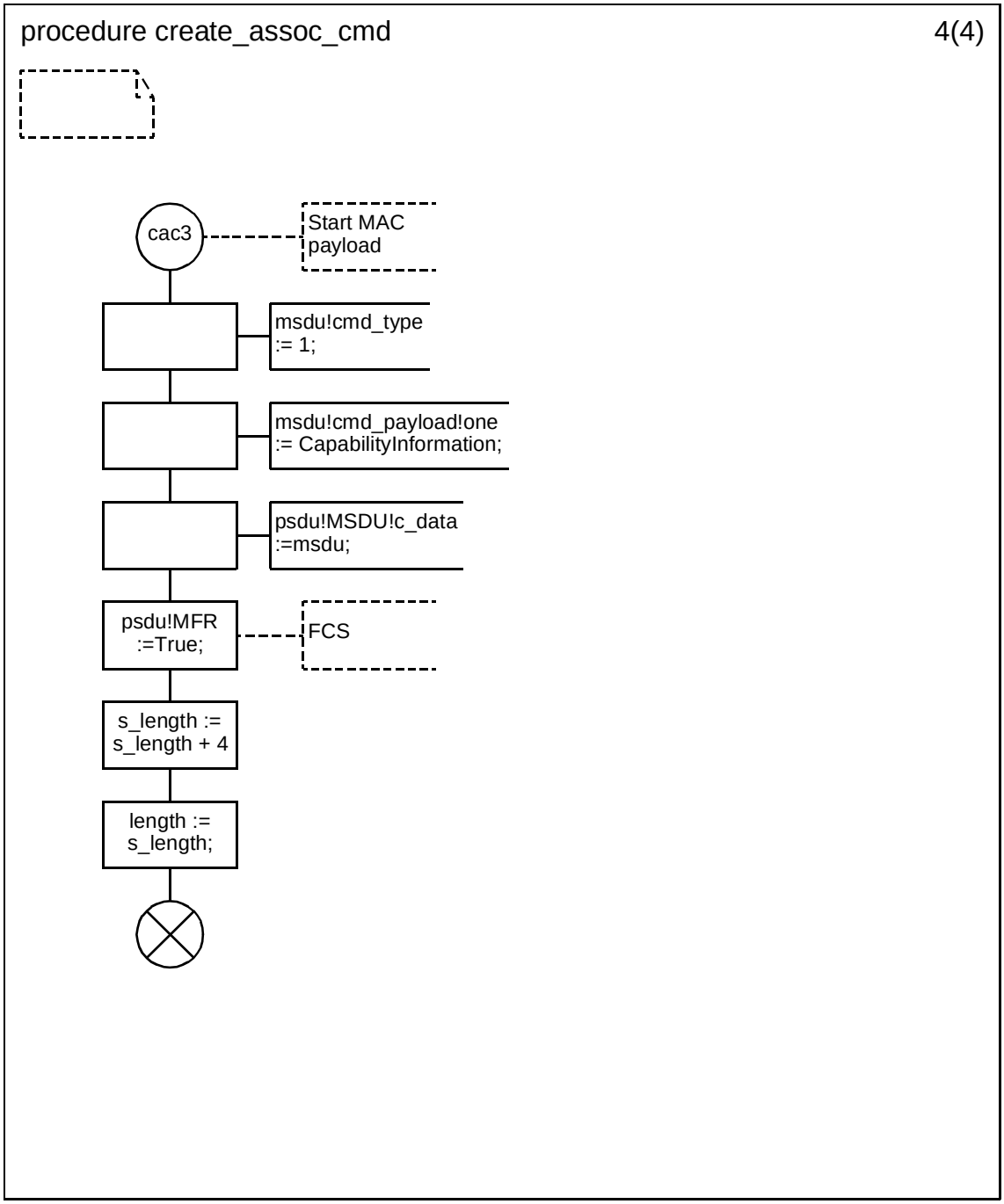



Copyright © 2003 IEEE. All rights reserved.
Authorized licensed use limited to: IEEE - Staff. Downloaded on October 28,2024 at 20:20:02 UTC from IEEE Xplore. Restrictions apply.

INTEL-1011
U.S. Patent 8,219,129

### D.3.1.154.35 Procedure create_assocresp_cmd (1)

.

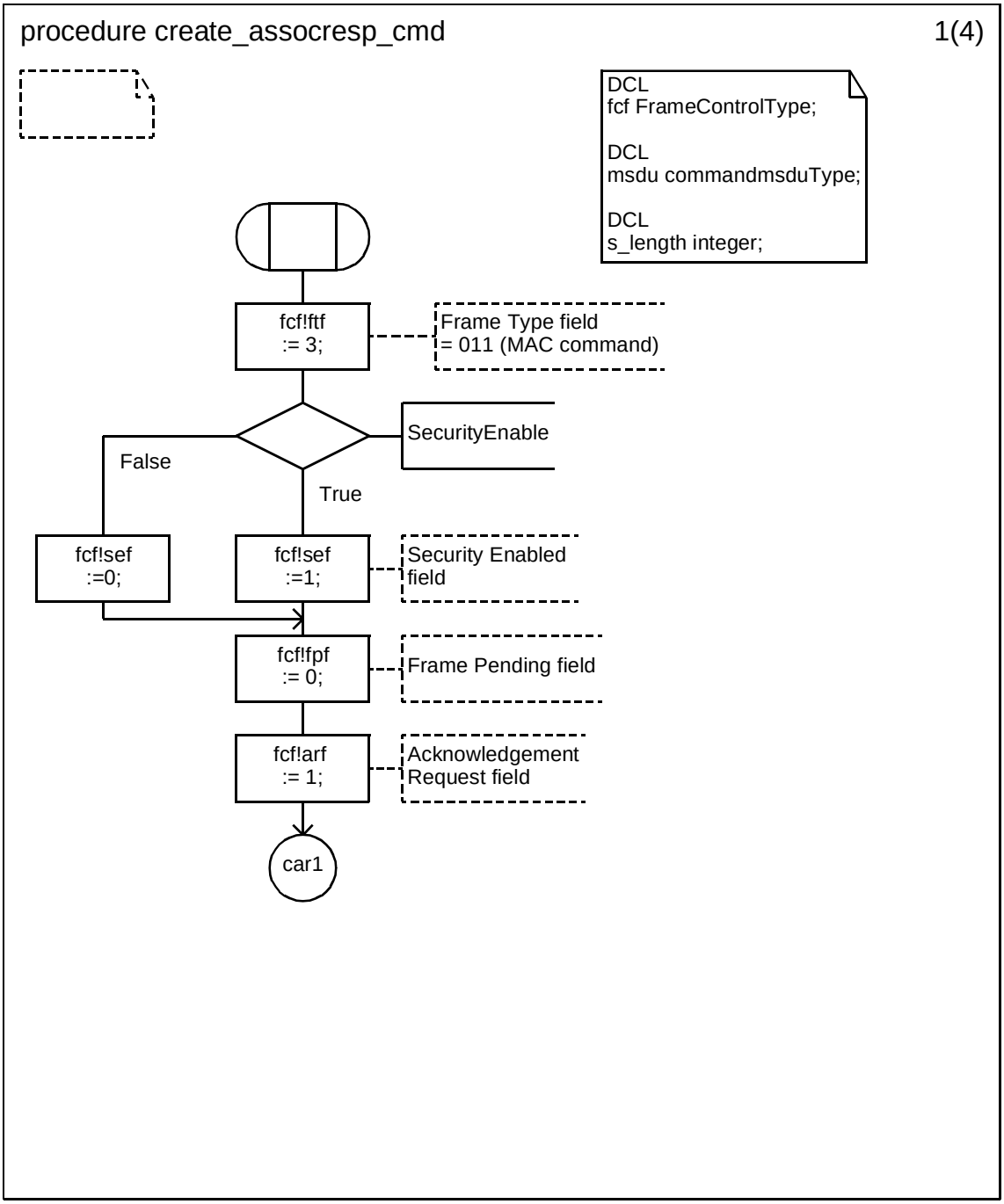


Copyright © 2003 IEEE. All rights reserved.

Authorized licensed use limited to: IEEE - Staff. Downloaded on October 28,2024 at 20:20:02 UTC from IEEE Xplore. Restrictions apply.

INTEL-1011
U.S. Patent 8,219,129

**D.3.1.154.36 Procedure create_assocresp_cmd (2)**

.

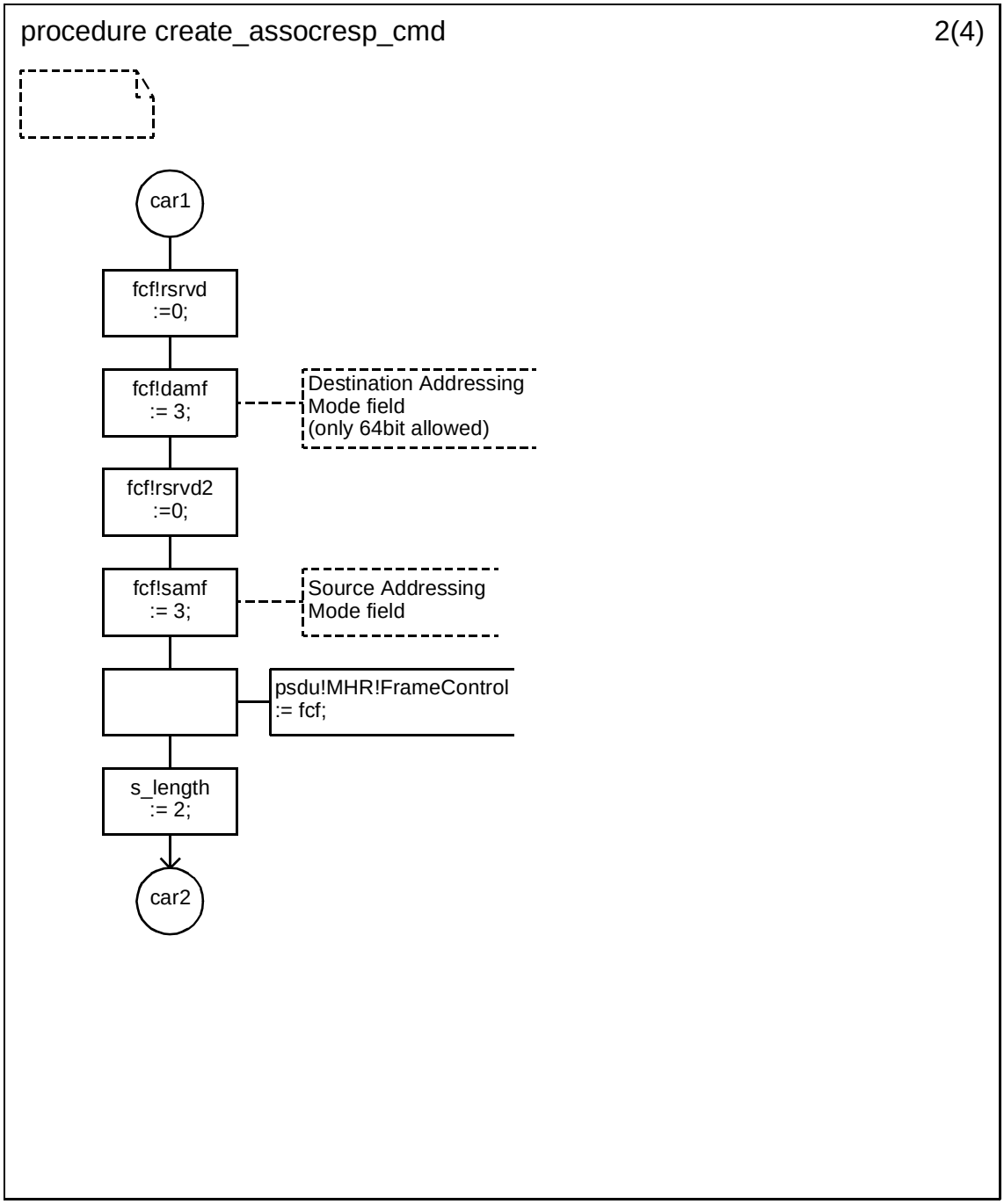



Copyright © 2003 IEEE. All rights reserved.
Authorized licensed use limited to: IEEE - Staff. Downloaded on October 28,2024 at 20:20:02 UTC from IEEE Xplore. Restrictions apply.

INTEL-1011
U.S. Patent 8,219,129

### D.3.1.154.37 Procedure create_assocresp_cmd (3)

.

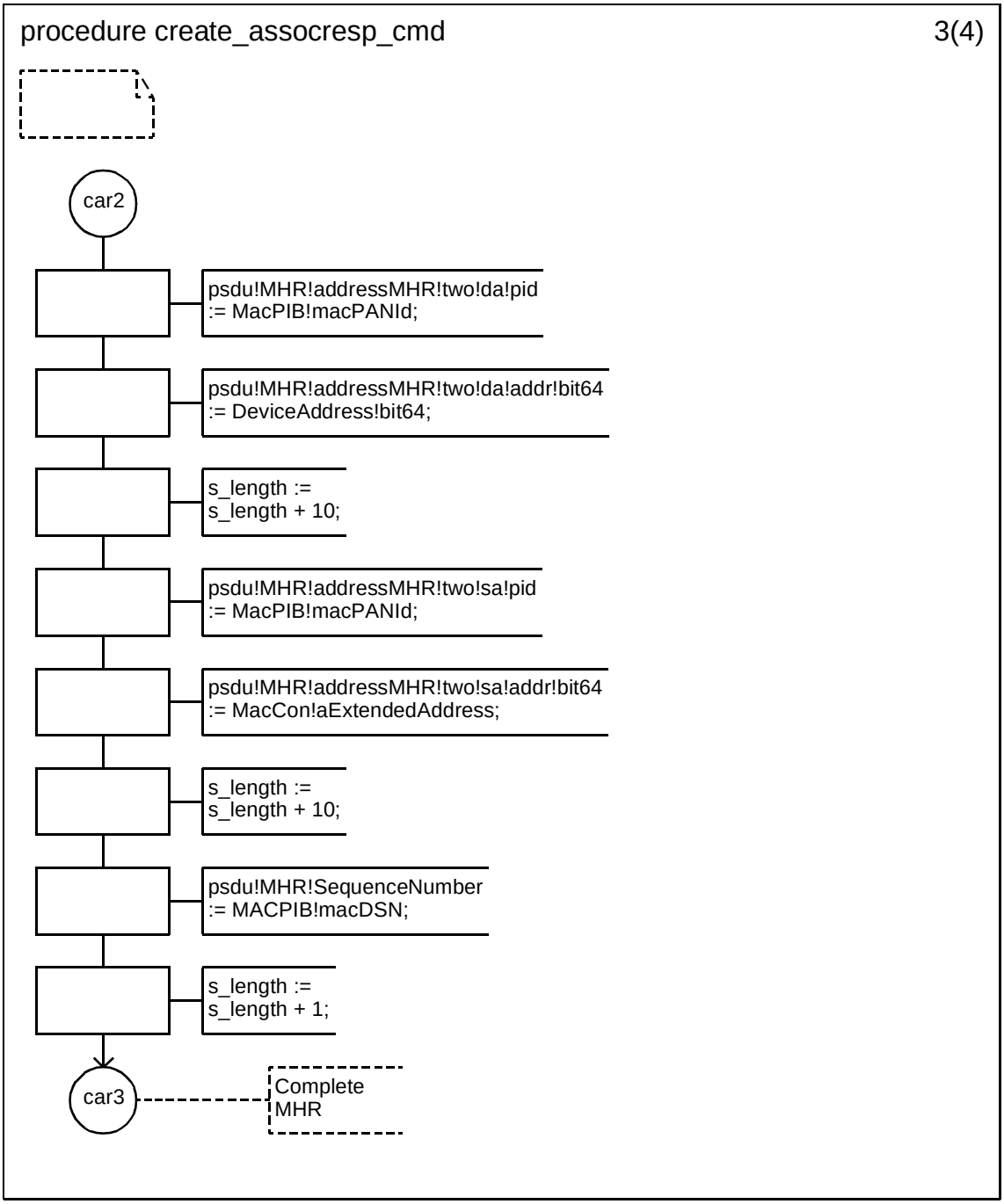


Copyright © 2003 IEEE. All rights reserved.

Authorized licensed use limited to: IEEE - Staff. Downloaded on October 28,2024 at 20:20:02 UTC from IEEE Xplore. Restrictions apply.

INTEL-1011
U.S. Patent 8,219,129

### D.3.1.154.38 Procedure create_assocresp_cmd (4)

.

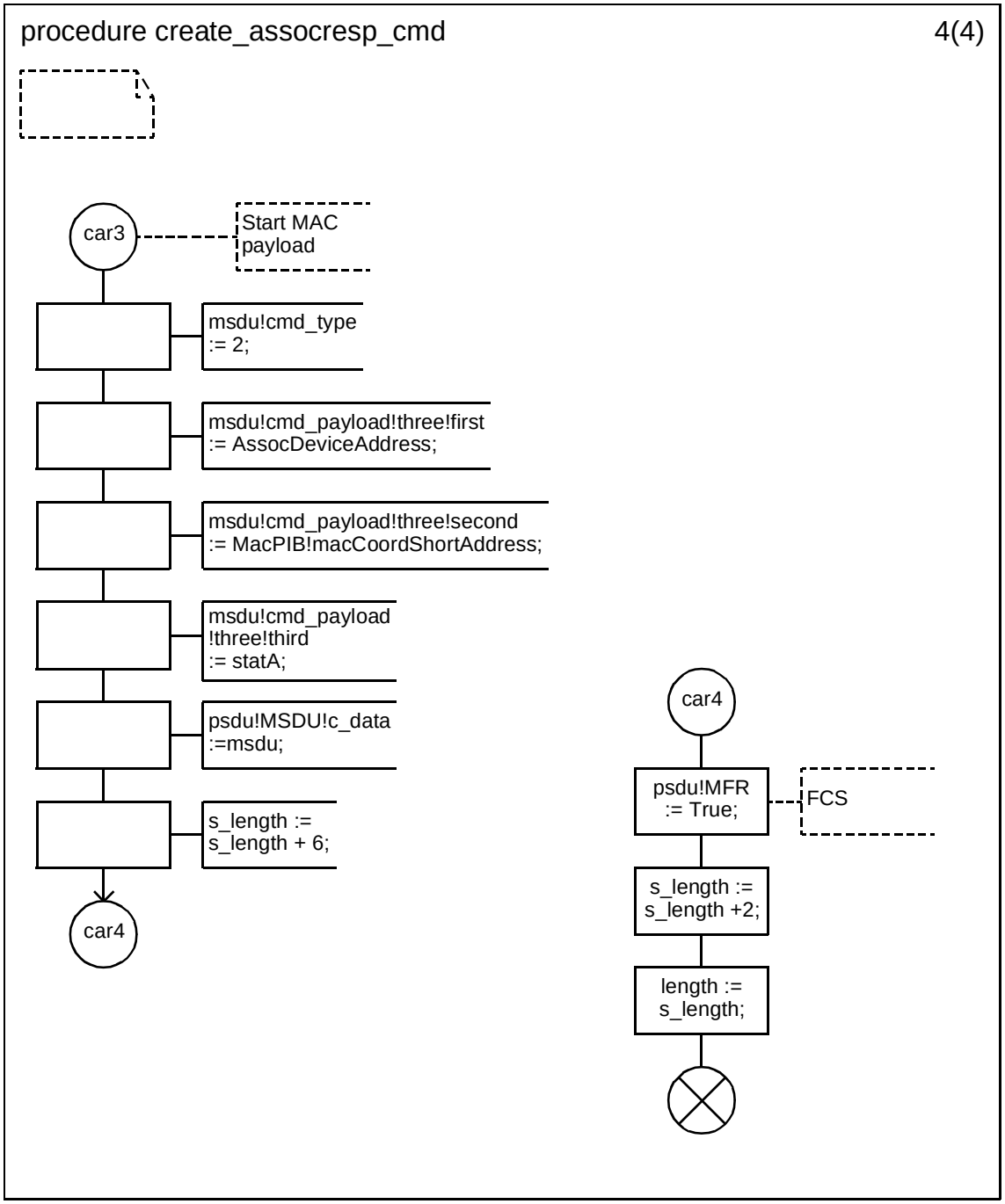



Copyright © 2003 IEEE. All rights reserved.
Authorized licensed use limited to: IEEE - Staff. Downloaded on October 28,2024 at 20:20:02 UTC from IEEE Xplore. Restrictions apply.

INTEL-1011
U.S. Patent 8,219,129

### D.3.1.154.39 Procedure create_disassoc_cmd (1)

.

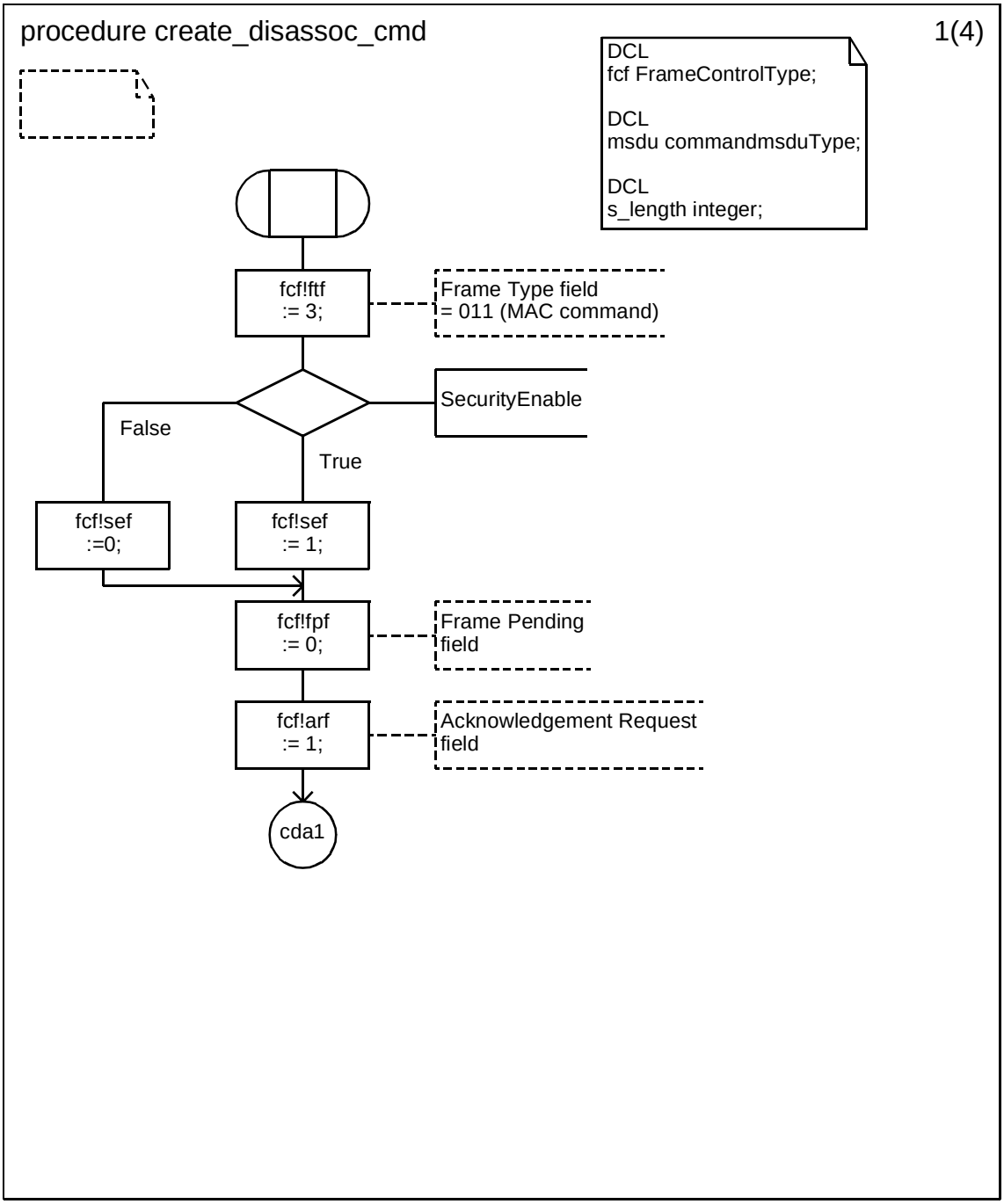


Copyright © 2003 IEEE. All rights reserved.

Authorized licensed use limited to: IEEE - Staff. Downloaded on October 28,2024 at 20:20:02 UTC from IEEE Xplore. Restrictions apply.

INTEL-1011
U.S. Patent 8,219,129

**D.3.1.154.40 Procedure create_disassoc_cmd (2)**

.

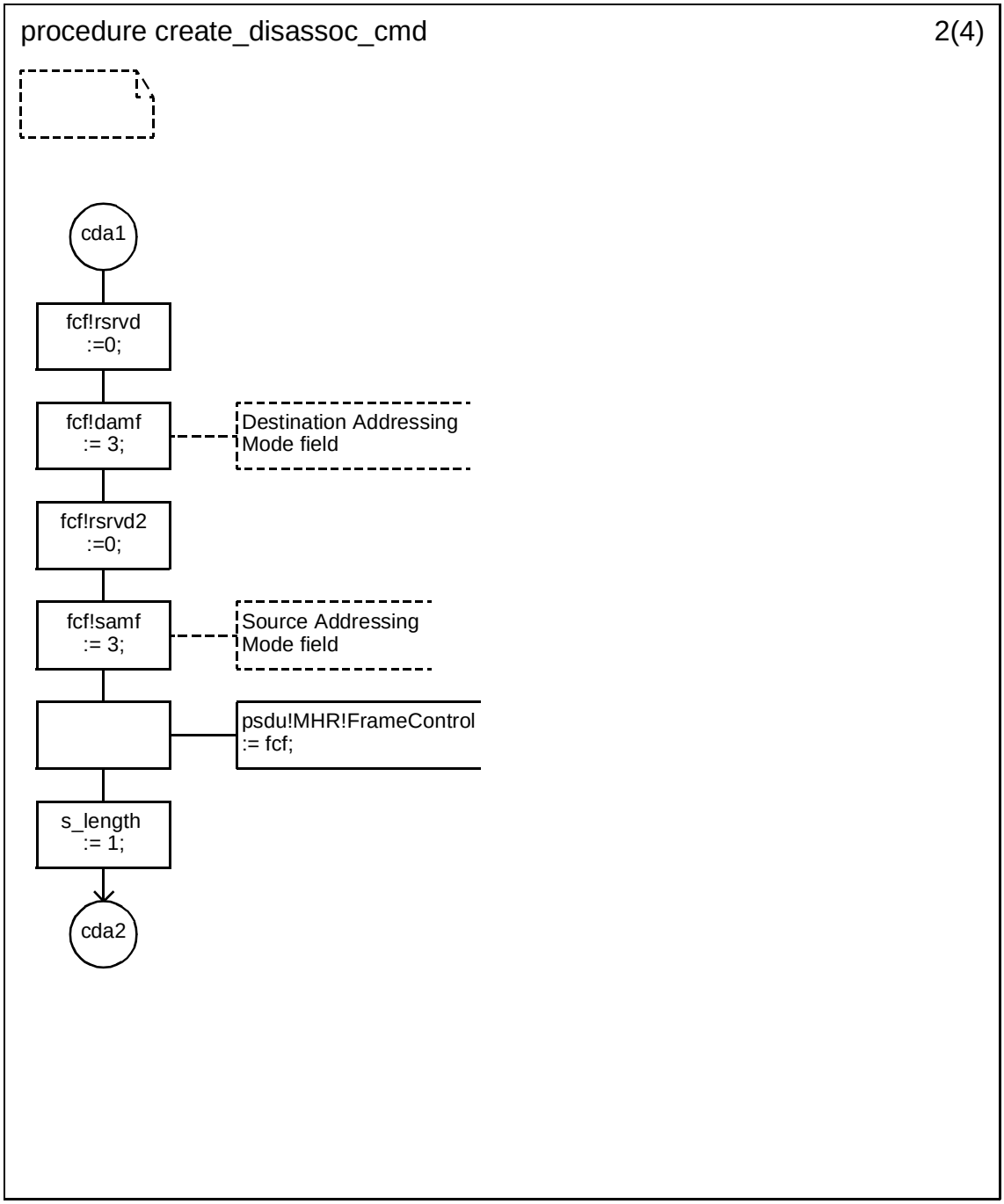



Copyright © 2003 IEEE. All rights reserved.
Authorized licensed use limited to: IEEE - Staff. Downloaded on October 28,2024 at 20:20:02 UTC from IEEE Xplore. Restrictions apply.

INTEL-1011
U.S. Patent 8,219,129

### D.3.1.154.41 Procedure create_disassoc_cmd (3)

.

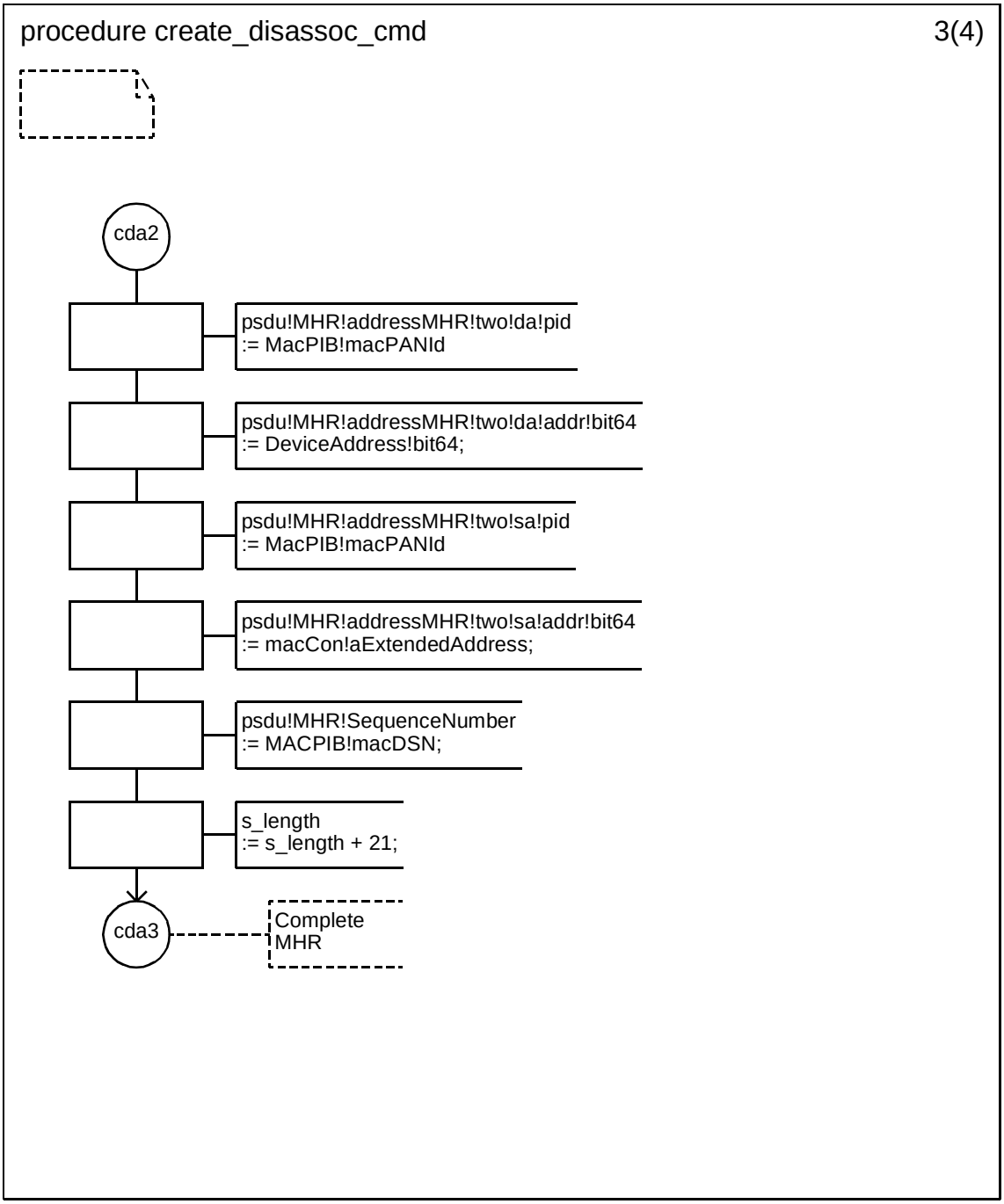


Copyright © 2003 IEEE. All rights reserved.

Authorized licensed use limited to: IEEE - Staff. Downloaded on October 28,2024 at 20:20:02 UTC from IEEE Xplore. Restrictions apply.

INTEL-1011
U.S. Patent 8,219,129

### D.3.1.154.42 Procedure create_disassoc_cmd (4)

.

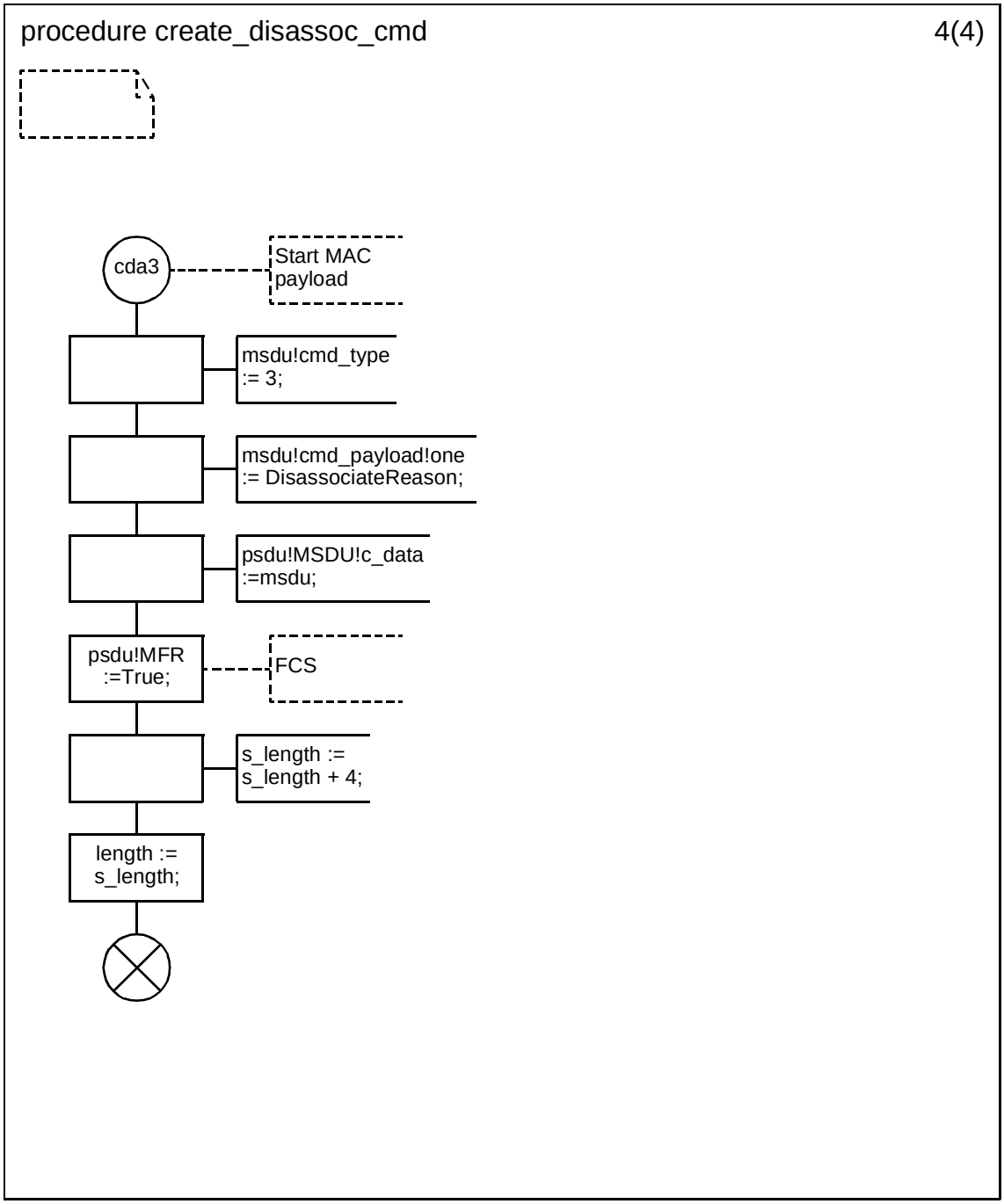



Copyright © 2003 IEEE. All rights reserved.
Authorized licensed use limited to: IEEE - Staff. Downloaded on October 28,2024 at 20:20:02 UTC from IEEE Xplore. Restrictions apply.

INTEL-1011
U.S. Patent 8,219,129

### D.3.1.154.43 Procedure create_data_request_cmd (1)

.

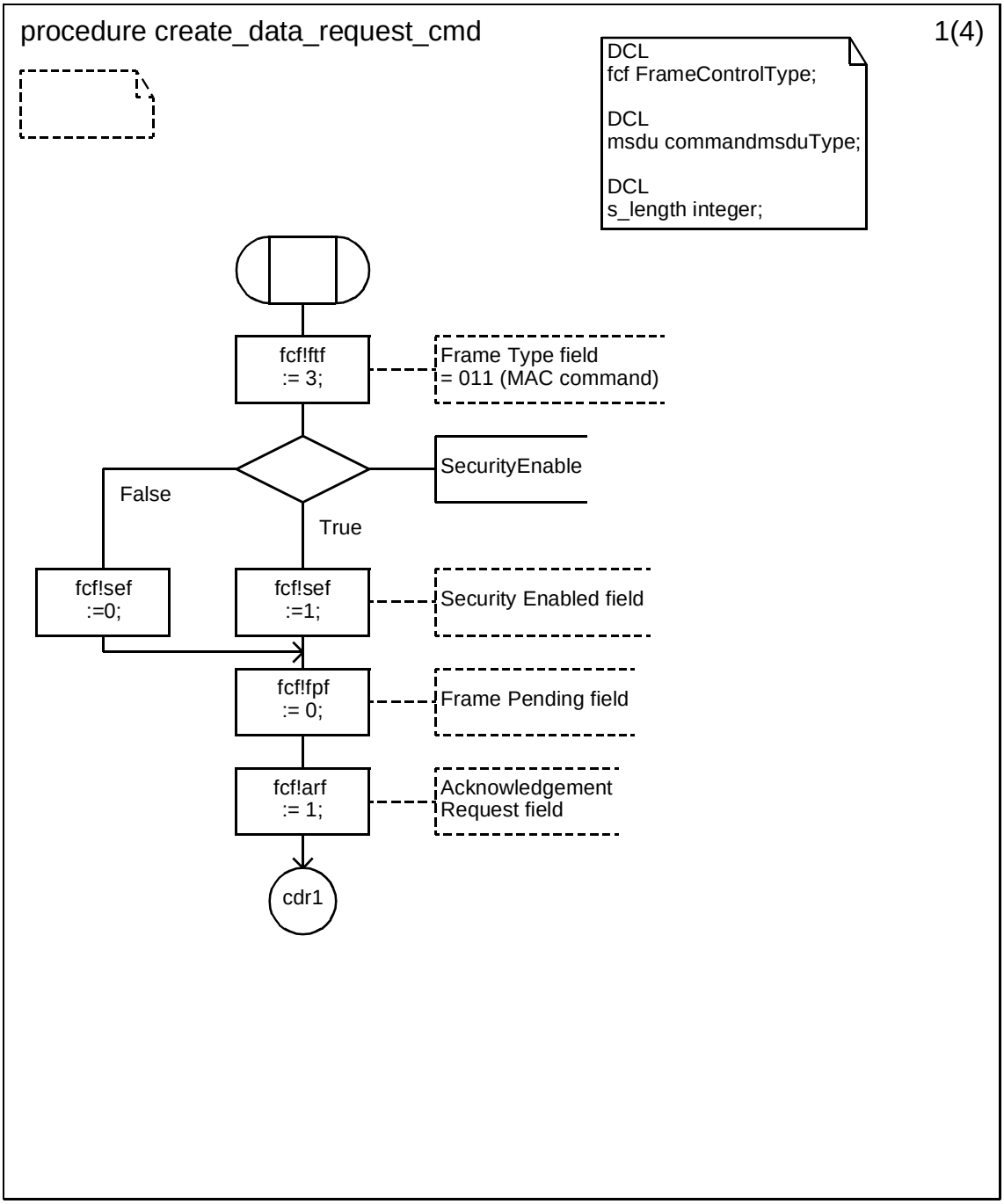


Copyright © 2003 IEEE. All rights reserved.

Authorized licensed use limited to: IEEE - Staff. Downloaded on October 28,2024 at 20:20:02 UTC from IEEE Xplore. Restrictions apply.

INTEL-1011
U.S. Patent 8,219,129

**D.3.1.154.44 Procedure create_data_request_cmd (2)**

.

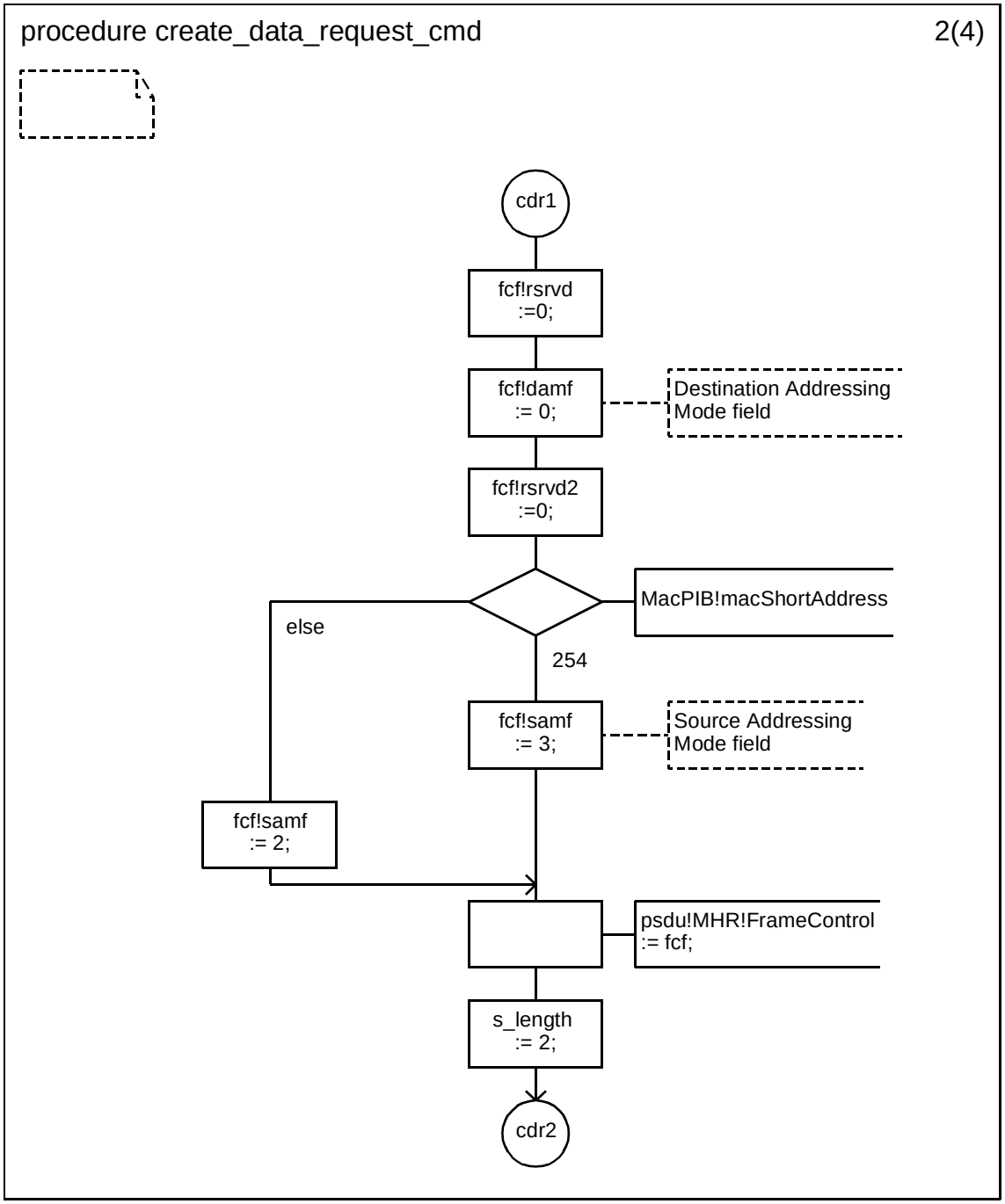



Copyright © 2003 IEEE. All rights reserved.
Authorized licensed use limited to: IEEE - Staff. Downloaded on October 28,2024 at 20:20:02 UTC from IEEE Xplore. Restrictions apply.

INTEL-1011
U.S. Patent 8,219,129

**D.3.1.154.45 Procedure create_data_request_cmd (3)**

.

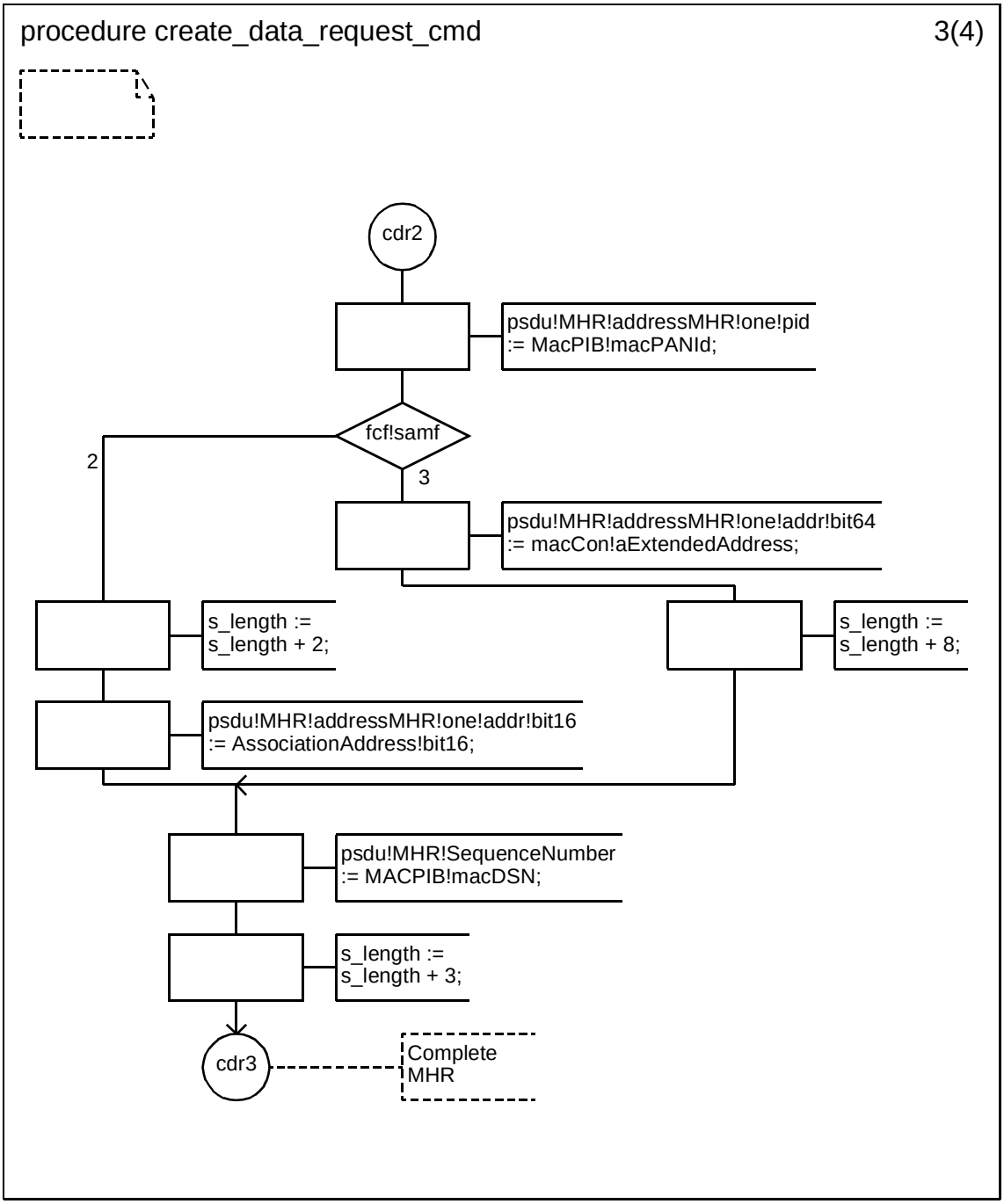


Copyright © 2003 IEEE. All rights reserved.

Authorized licensed use limited to: IEEE - Staff. Downloaded on October 28,2024 at 20:20:02 UTC from IEEE Xplore. Restrictions apply.

INTEL-1011
U.S. Patent 8,219,129

**D.3.1.154.46 Procedure create_data_request_cmd (4)**

.

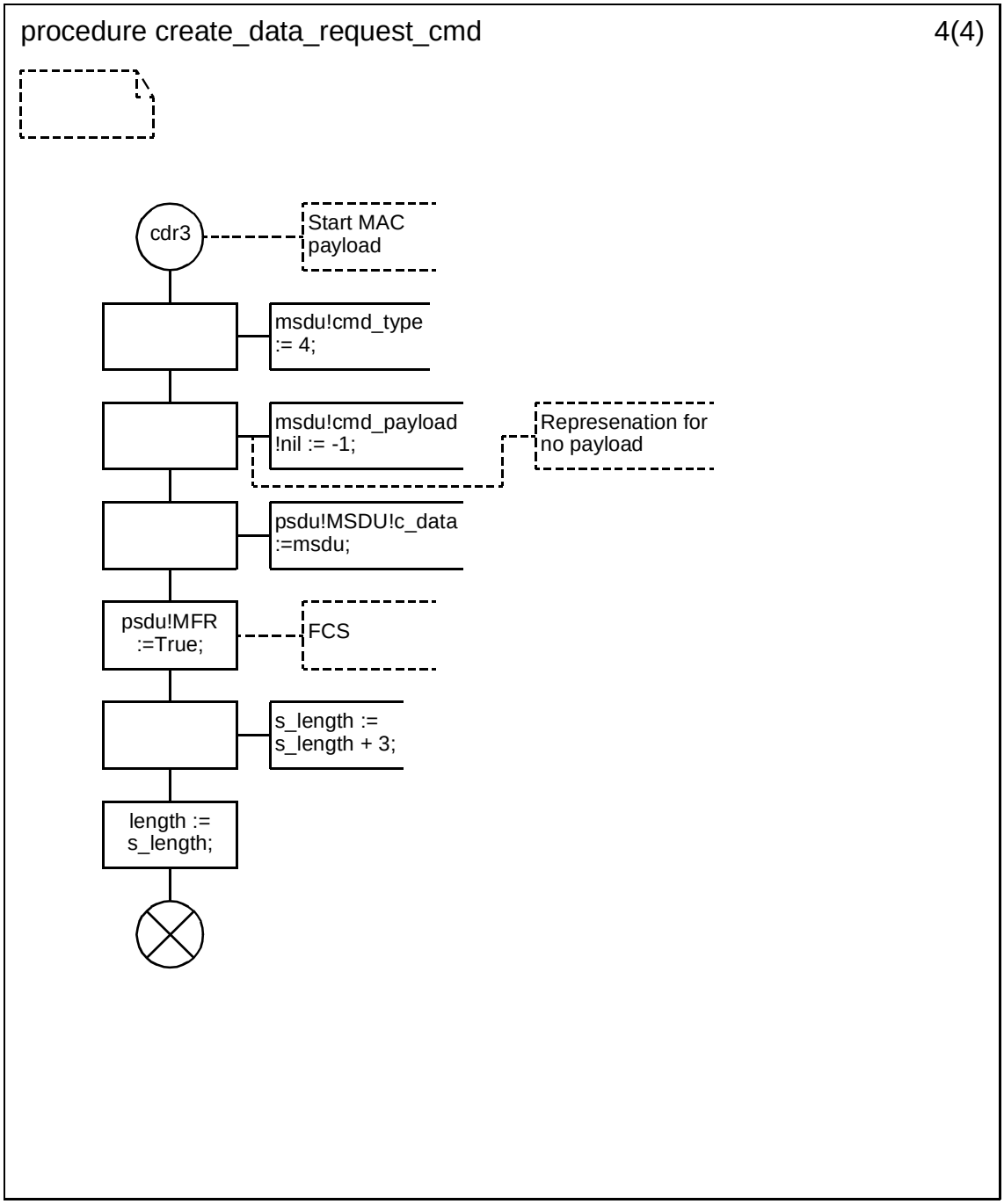



Copyright © 2003 IEEE. All rights reserved.
Authorized licensed use limited to: IEEE - Staff. Downloaded on October 28,2024 at 20:20:02 UTC from IEEE Xplore. Restrictions apply.

INTEL-1011
U.S. Patent 8,219,129

**D.3.1.154.47 Procedure create_pid_con_cmd (1)**

.

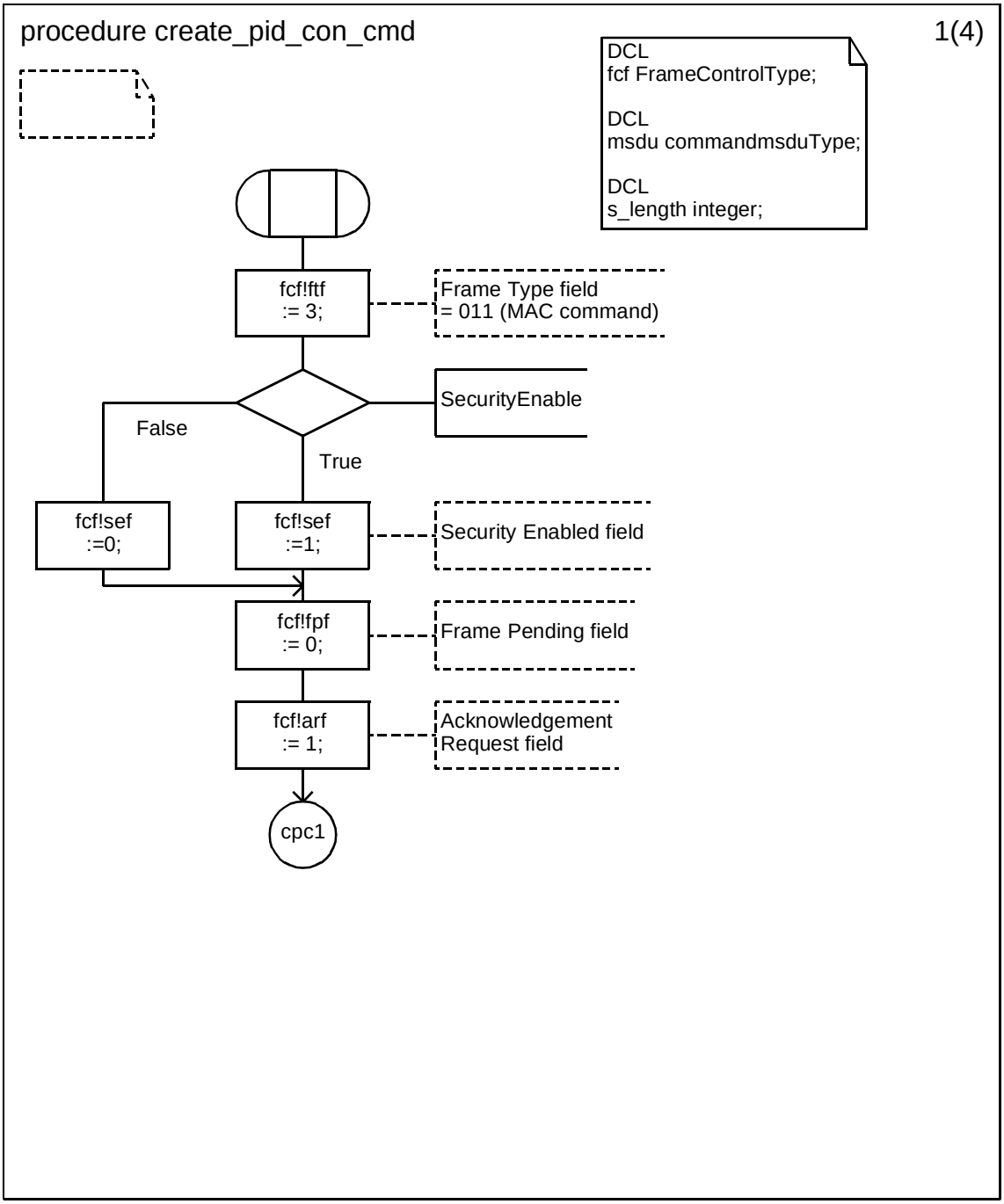


Copyright © 2003 IEEE. All rights reserved.

Authorized licensed use limited to: IEEE - Staff. Downloaded on October 28,2024 at 20:20:02 UTC from IEEE Xplore. Restrictions apply.

INTEL-1011
U.S. Patent 8,219,129

**D.3.1.154.48 Procedure create_pid_con_cmd (2)**

.

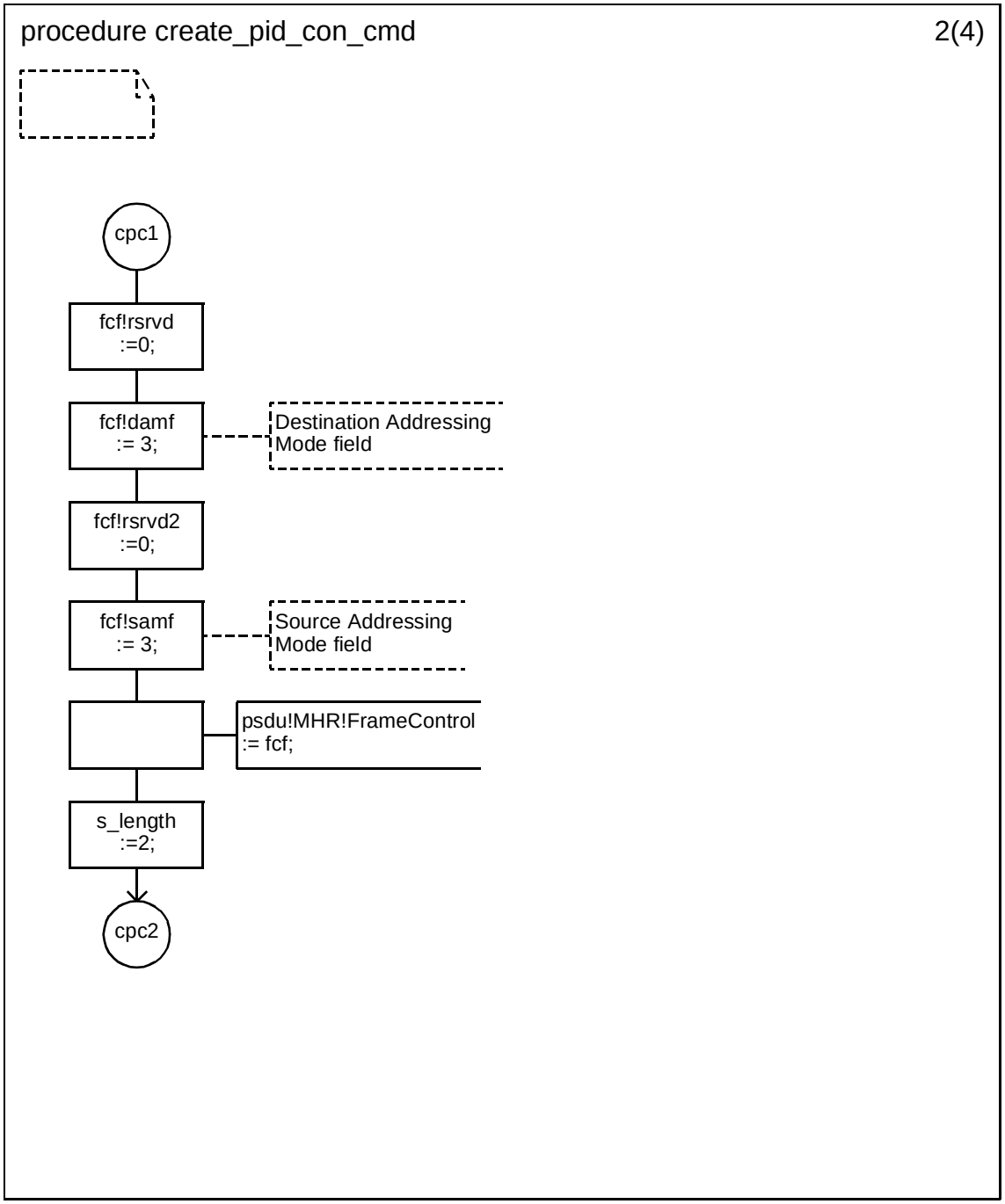



Copyright © 2003 IEEE. All rights reserved.
Authorized licensed use limited to: IEEE - Staff. Downloaded on October 28,2024 at 20:20:02 UTC from IEEE Xplore. Restrictions apply.

INTEL-1011
U.S. Patent 8,219,129

**D.3.1.154.49 Procedure create_pid_con_cmd (3)**

.

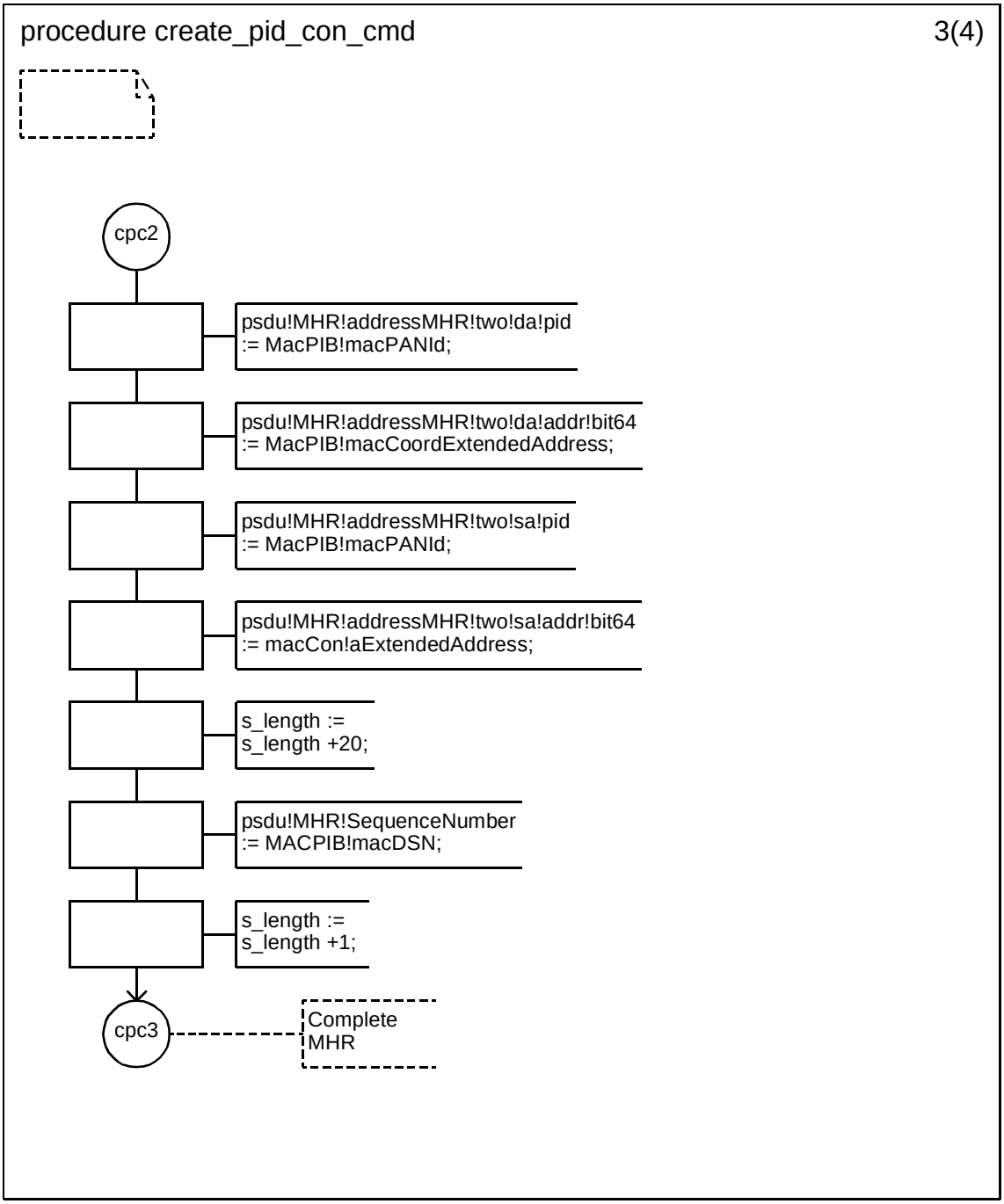


Copyright © 2003 IEEE. All rights reserved.

Authorized licensed use limited to: IEEE - Staff. Downloaded on October 28,2024 at 20:20:02 UTC from IEEE Xplore. Restrictions apply.

INTEL-1011
U.S. Patent 8,219,129

**D.3.1.154.50 Procedure create_pid_con_cmd (4)**

.

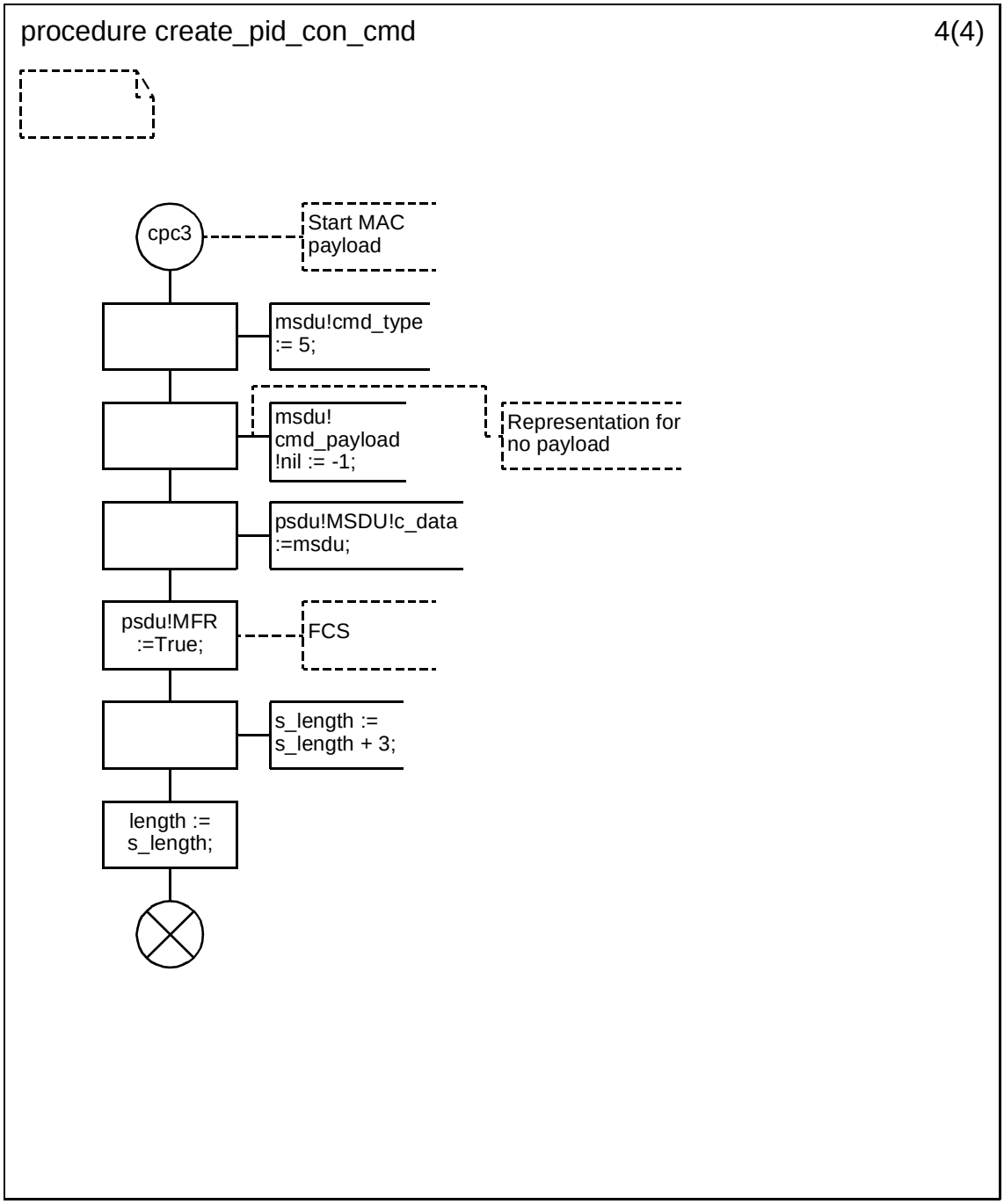



Copyright © 2003 IEEE. All rights reserved.
Authorized licensed use limited to: IEEE - Staff. Downloaded on October 28,2024 at 20:20:02 UTC from IEEE Xplore. Restrictions apply.

INTEL-1011
U.S. Patent 8,219,129

**D.3.1.154.51 Procedure create_orphan_cmd (1)**

.

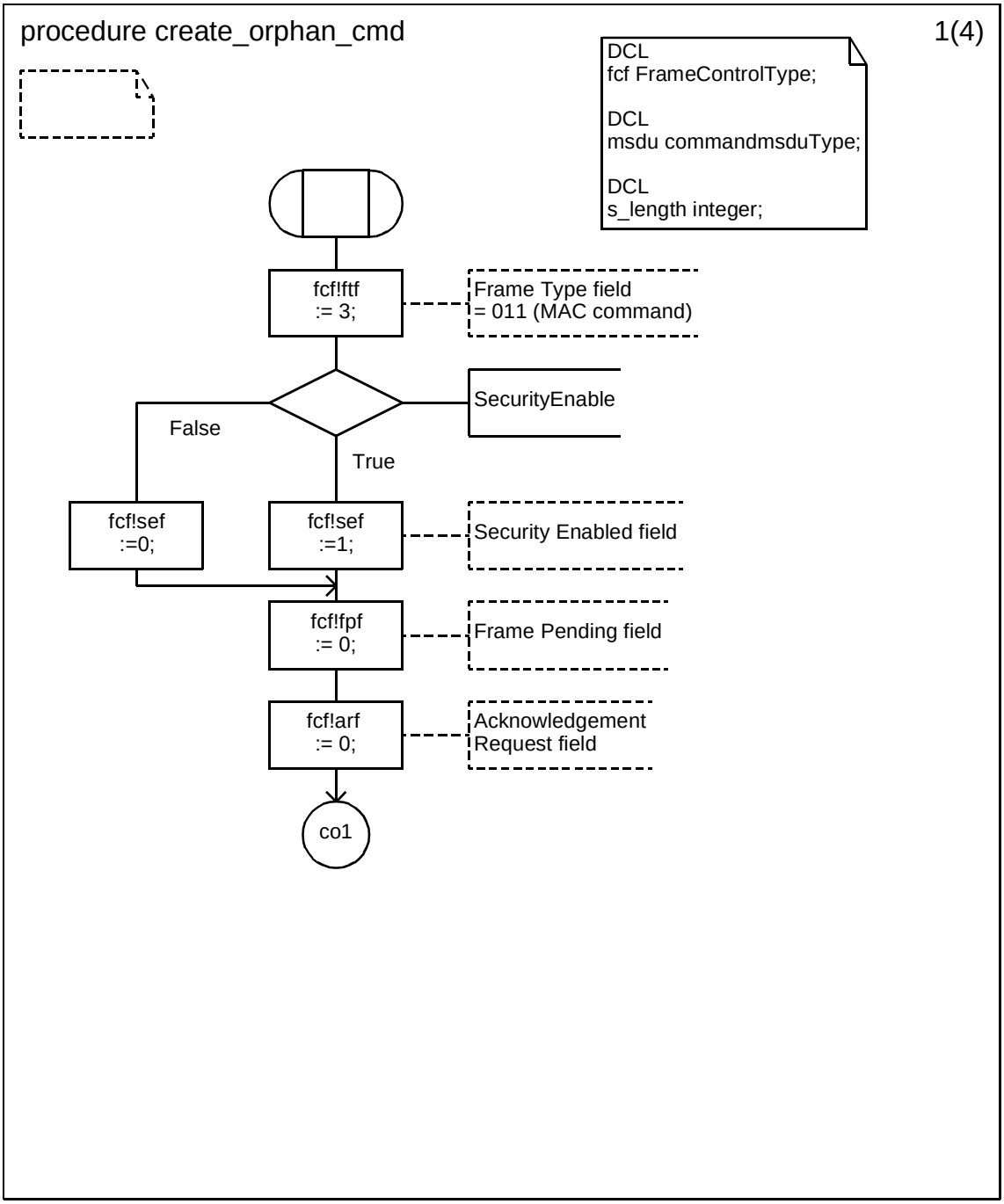


Copyright © 2003 IEEE. All rights reserved.

Authorized licensed use limited to: IEEE - Staff. Downloaded on October 28,2024 at 20:20:02 UTC from IEEE Xplore. Restrictions apply.

INTEL-1011
U.S. Patent 8,219,129

**D.3.1.154.52 Procedure create_orphan_cmd (2)**

.

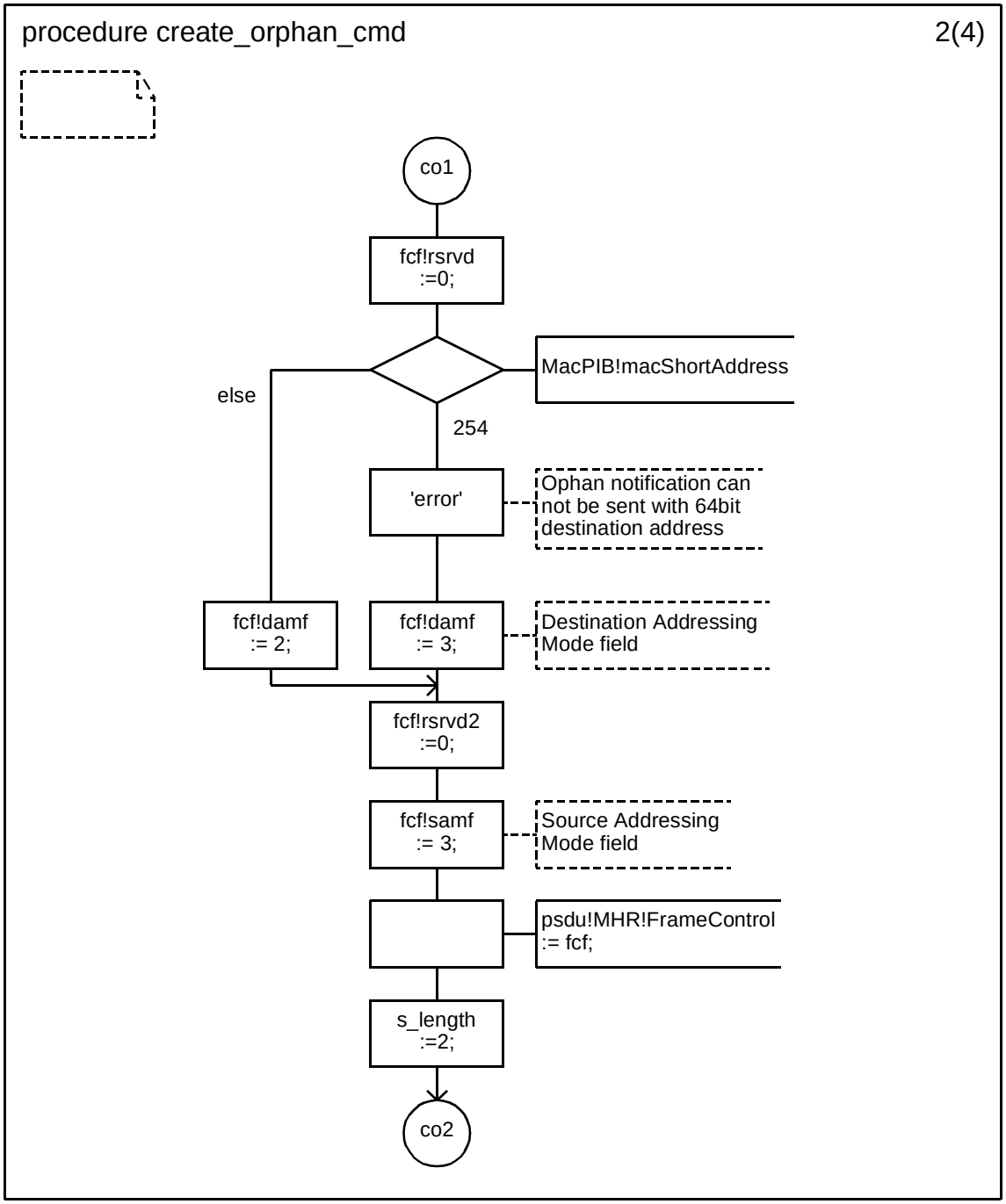



Copyright © 2003 IEEE. All rights reserved.
Authorized licensed use limited to: IEEE - Staff. Downloaded on October 28,2024 at 20:20:02 UTC from IEEE Xplore. Restrictions apply.

INTEL-1011
U.S. Patent 8,219,129

**D.3.1.154.53 Procedure create_orphan_cmd (3)**

.

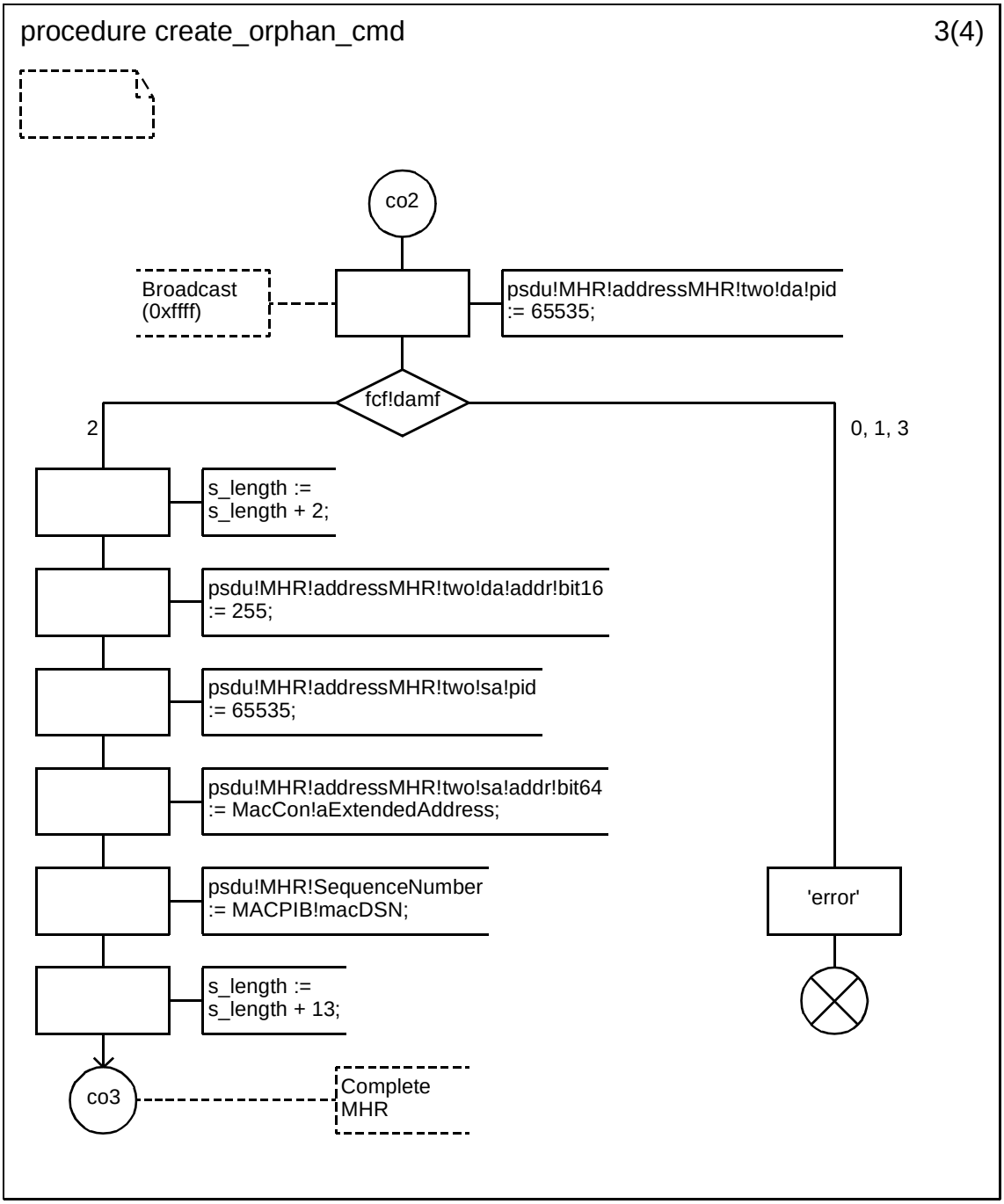


Copyright © 2003 IEEE. All rights reserved.

Authorized licensed use limited to: IEEE - Staff. Downloaded on October 28,2024 at 20:20:02 UTC from IEEE Xplore. Restrictions apply.

INTEL-1011
U.S. Patent 8,219,129

### D.3.1.154.54 Procedure create_orphan_cmd (4)

.

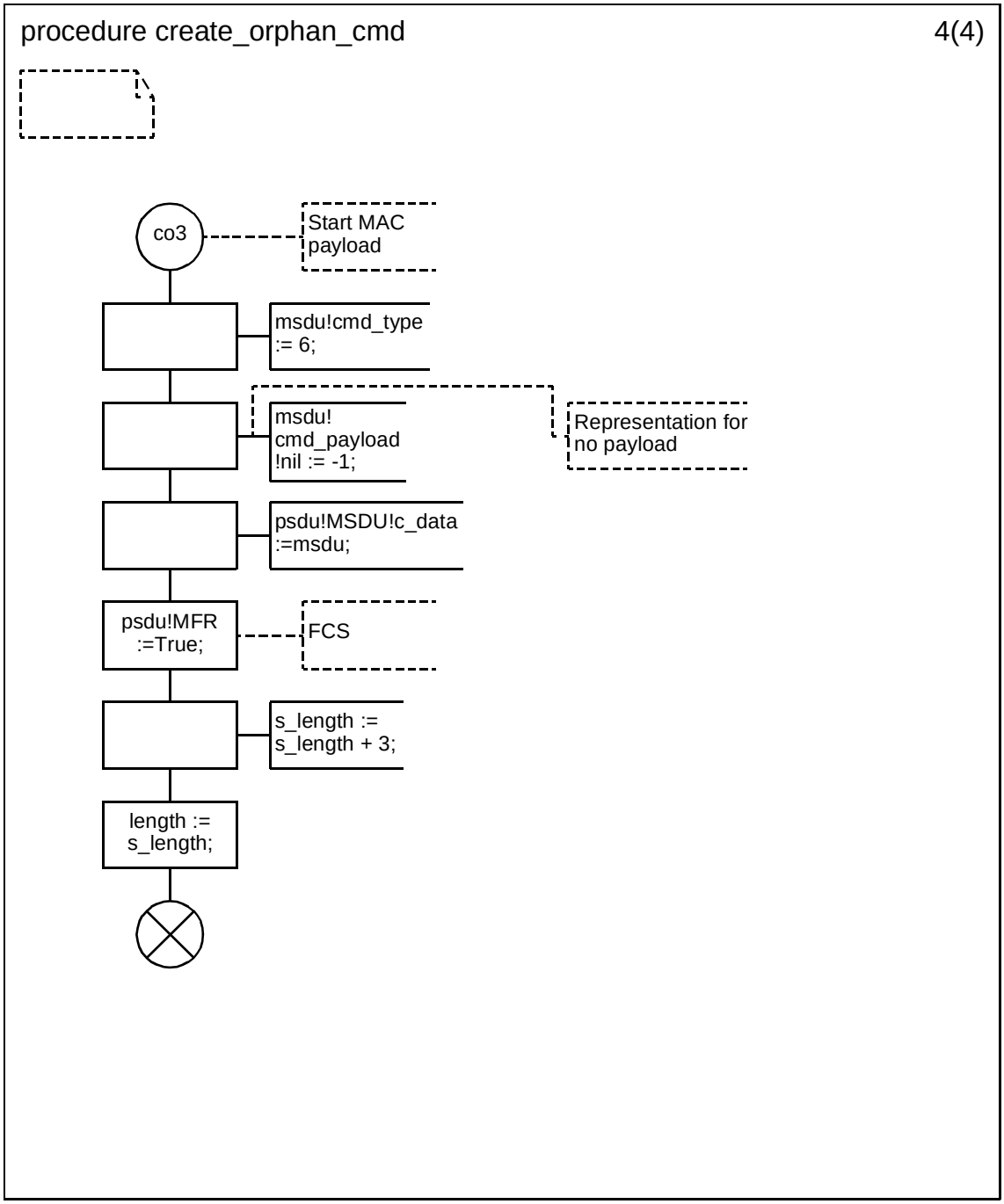



Copyright © 2003 IEEE. All rights reserved.
Authorized licensed use limited to: IEEE - Staff. Downloaded on October 28,2024 at 20:20:02 UTC from IEEE Xplore. Restrictions apply.

INTEL-1011
U.S. Patent 8,219,129

**D.3.1.154.55 Procedure create_beacon_request_cmd (1)**

.

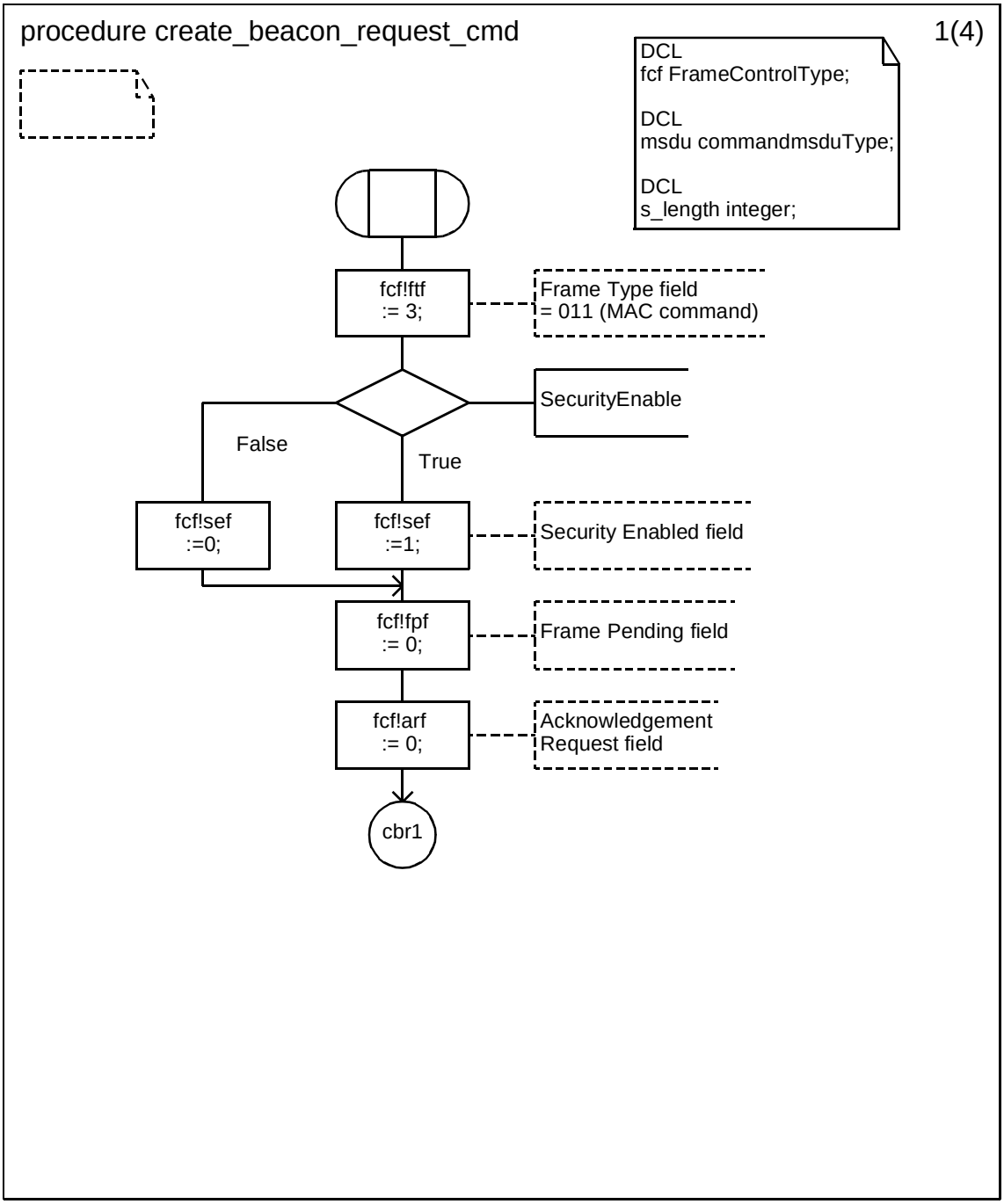


Copyright © 2003 IEEE. All rights reserved.

Authorized licensed use limited to: IEEE - Staff. Downloaded on October 28,2024 at 20:20:02 UTC from IEEE Xplore. Restrictions apply.

INTEL-1011
U.S. Patent 8,219,129

**D.3.1.154.56 Procedure create_beacon_request_cmd (2)**

.

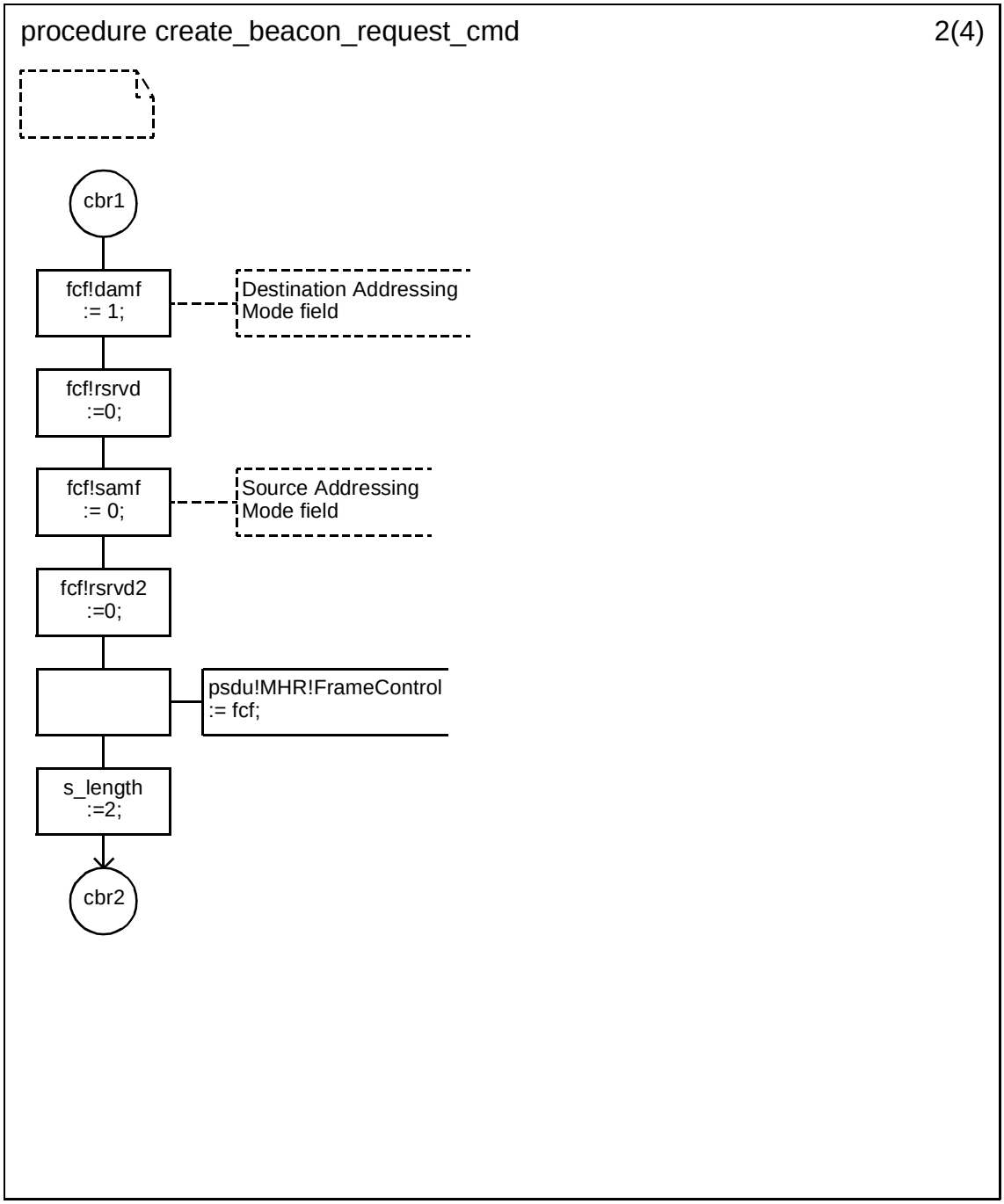



Copyright © 2003 IEEE. All rights reserved.
Authorized licensed use limited to: IEEE - Staff. Downloaded on October 28,2024 at 20:20:02 UTC from IEEE Xplore. Restrictions apply.

INTEL-1011
U.S. Patent 8,219,129

**D.3.1.154.57 Procedure create_beacon_request_cmd (3)**

.

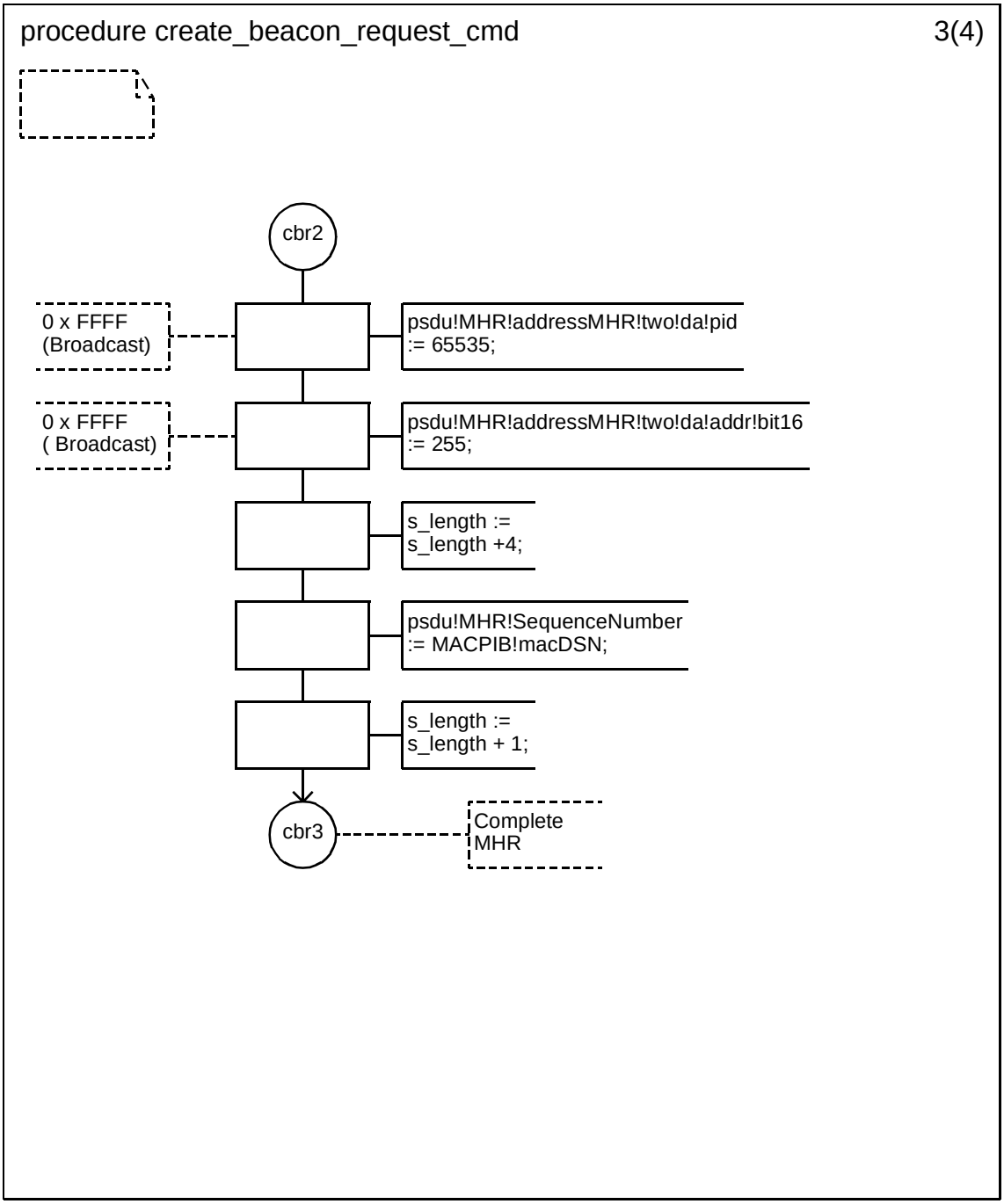


Copyright © 2003 IEEE. All rights reserved.

Authorized licensed use limited to: IEEE - Staff. Downloaded on October 28,2024 at 20:20:02 UTC from IEEE Xplore. Restrictions apply.

INTEL-1011
U.S. Patent 8,219,129

**D.3.1.154.58 Procedure create_beacon_request_cmd (4)**

.

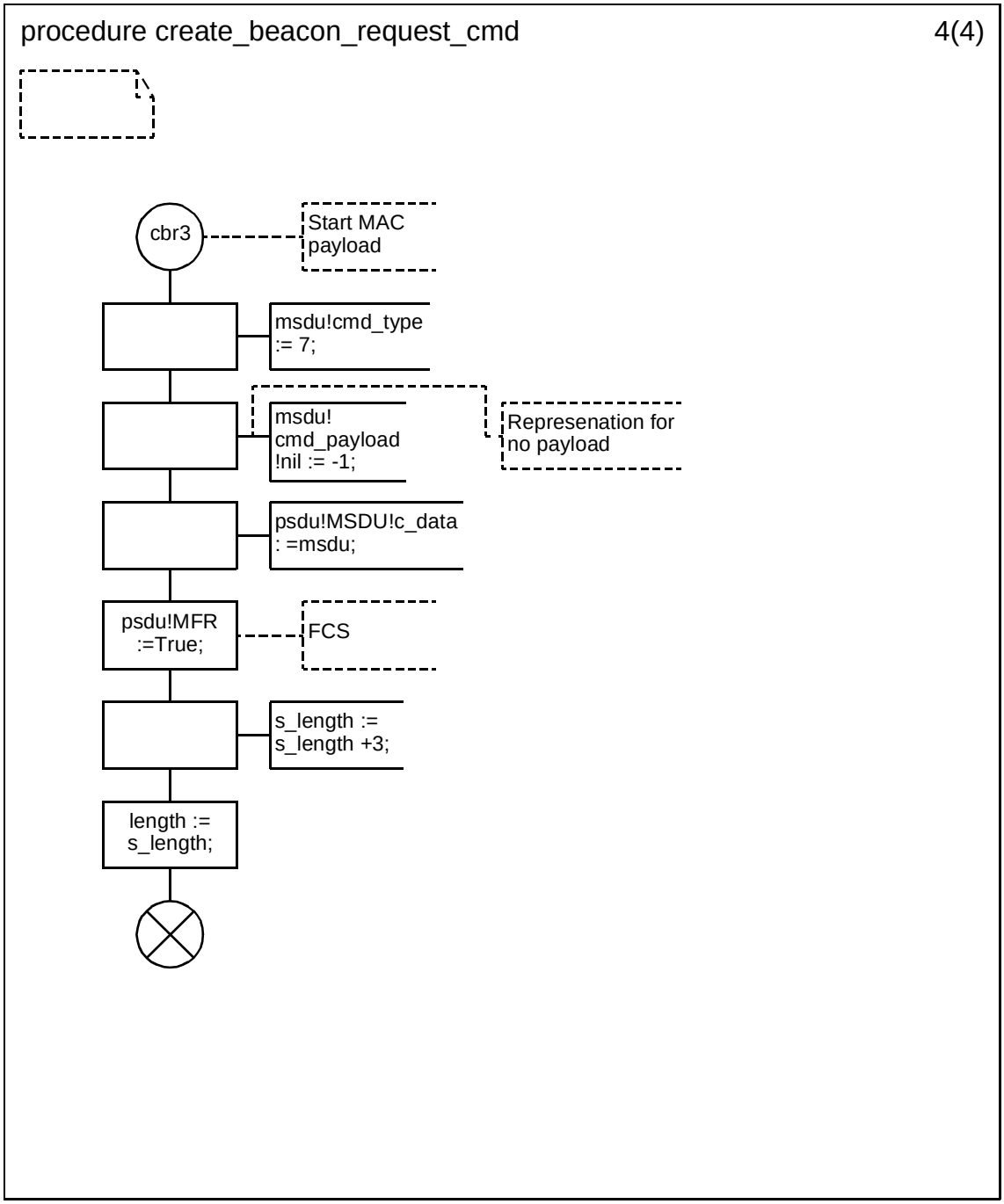



Copyright © 2003 IEEE. All rights reserved.
Authorized licensed use limited to: IEEE - Staff. Downloaded on October 28,2024 at 20:20:02 UTC from IEEE Xplore. Restrictions apply.

INTEL-1011
U.S. Patent 8,219,129

**D.3.1.154.59 Procedure create_realign_cmd (1)**

.

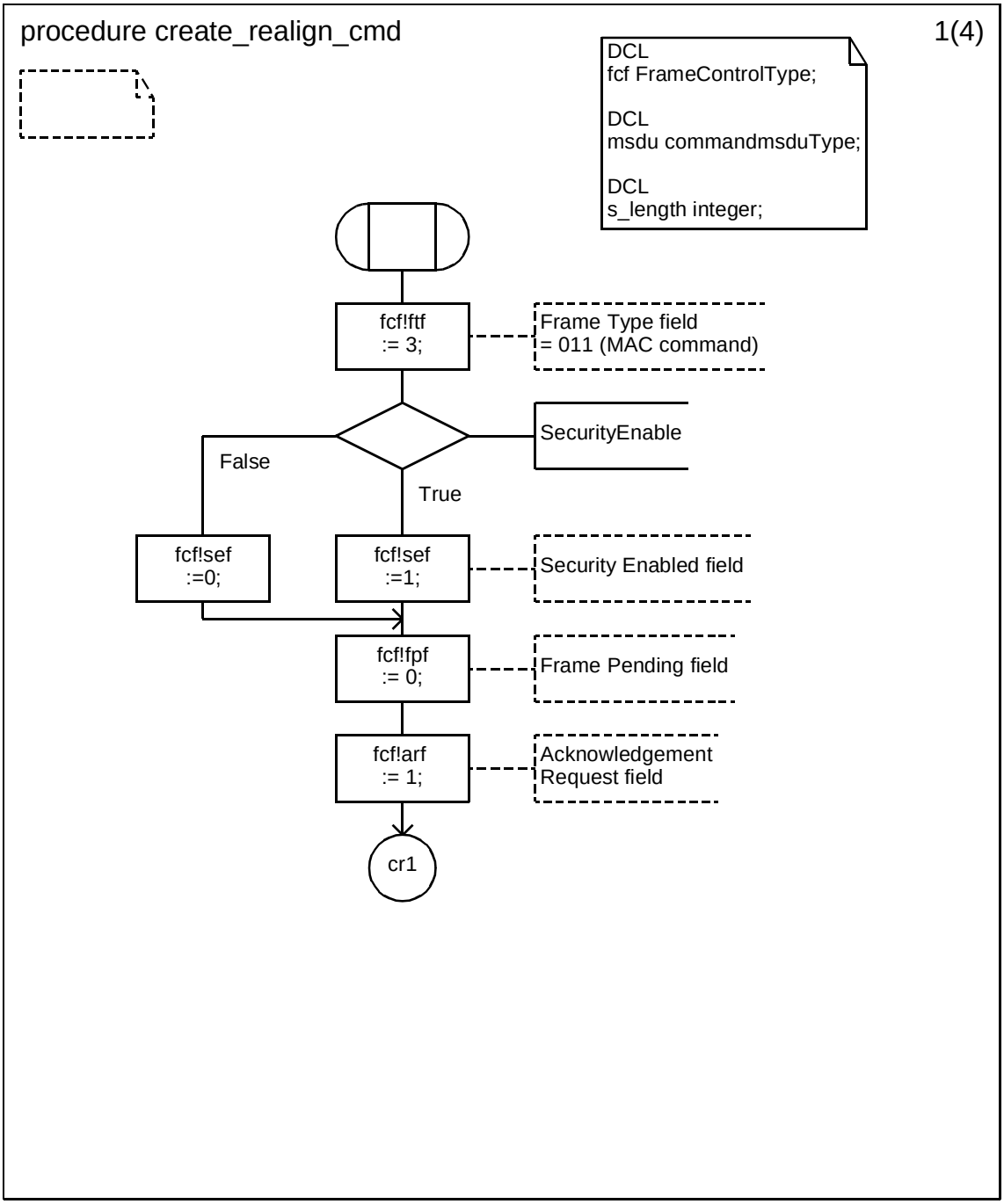


Copyright © 2003 IEEE. All rights reserved.

Authorized licensed use limited to: IEEE - Staff. Downloaded on October 28,2024 at 20:20:02 UTC from IEEE Xplore. Restrictions apply.

INTEL-1011
U.S. Patent 8,219,129

**D.3.1.154.60 Procedure create_realign_cmd (2)**

.

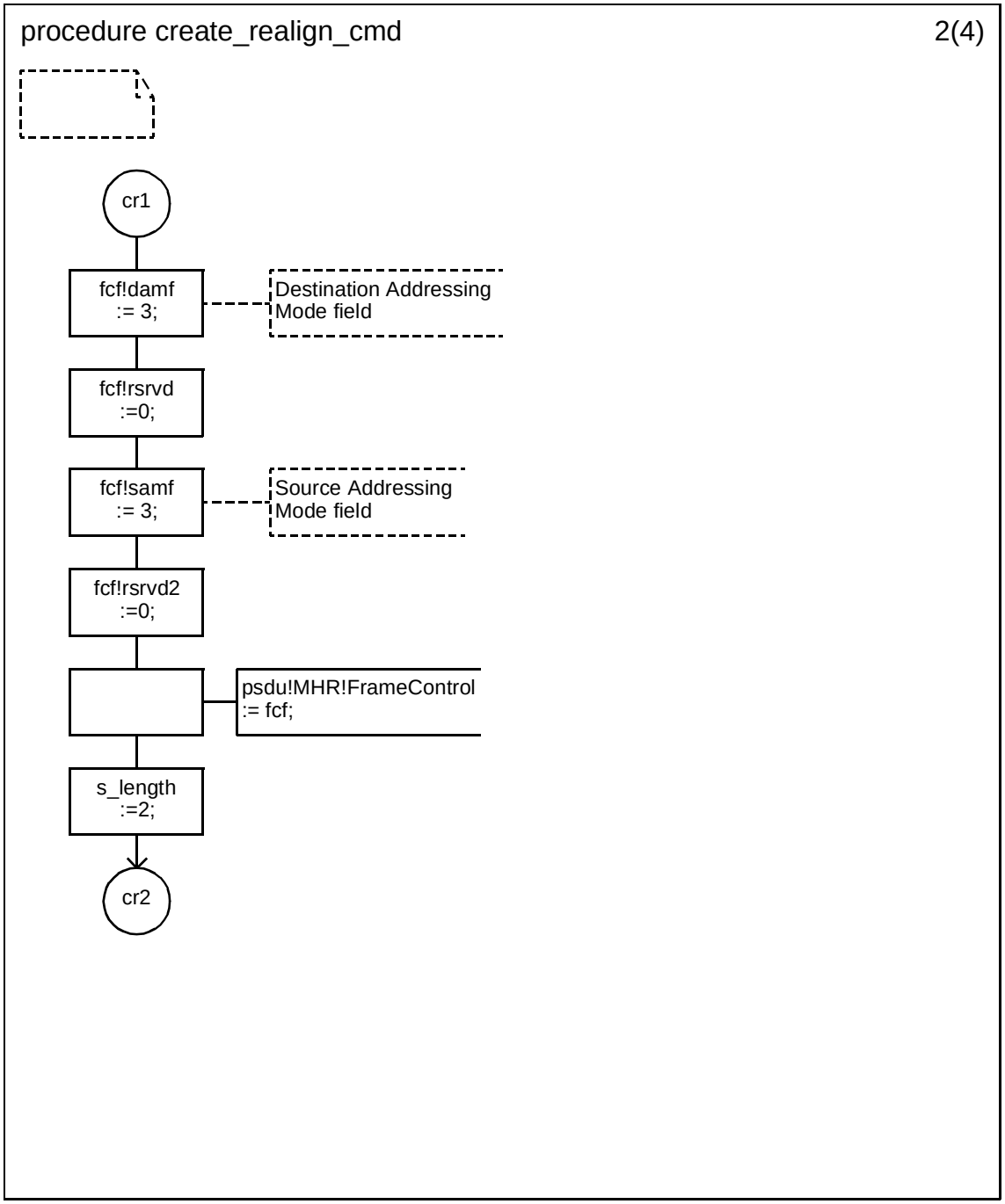



Copyright © 2003 IEEE. All rights reserved.
Authorized licensed use limited to: IEEE - Staff. Downloaded on October 28,2024 at 20:20:02 UTC from IEEE Xplore. Restrictions apply.

INTEL-1011
U.S. Patent 8,219,129

**D.3.1.154.61 Procedure create_realign_cmd (3)**

.

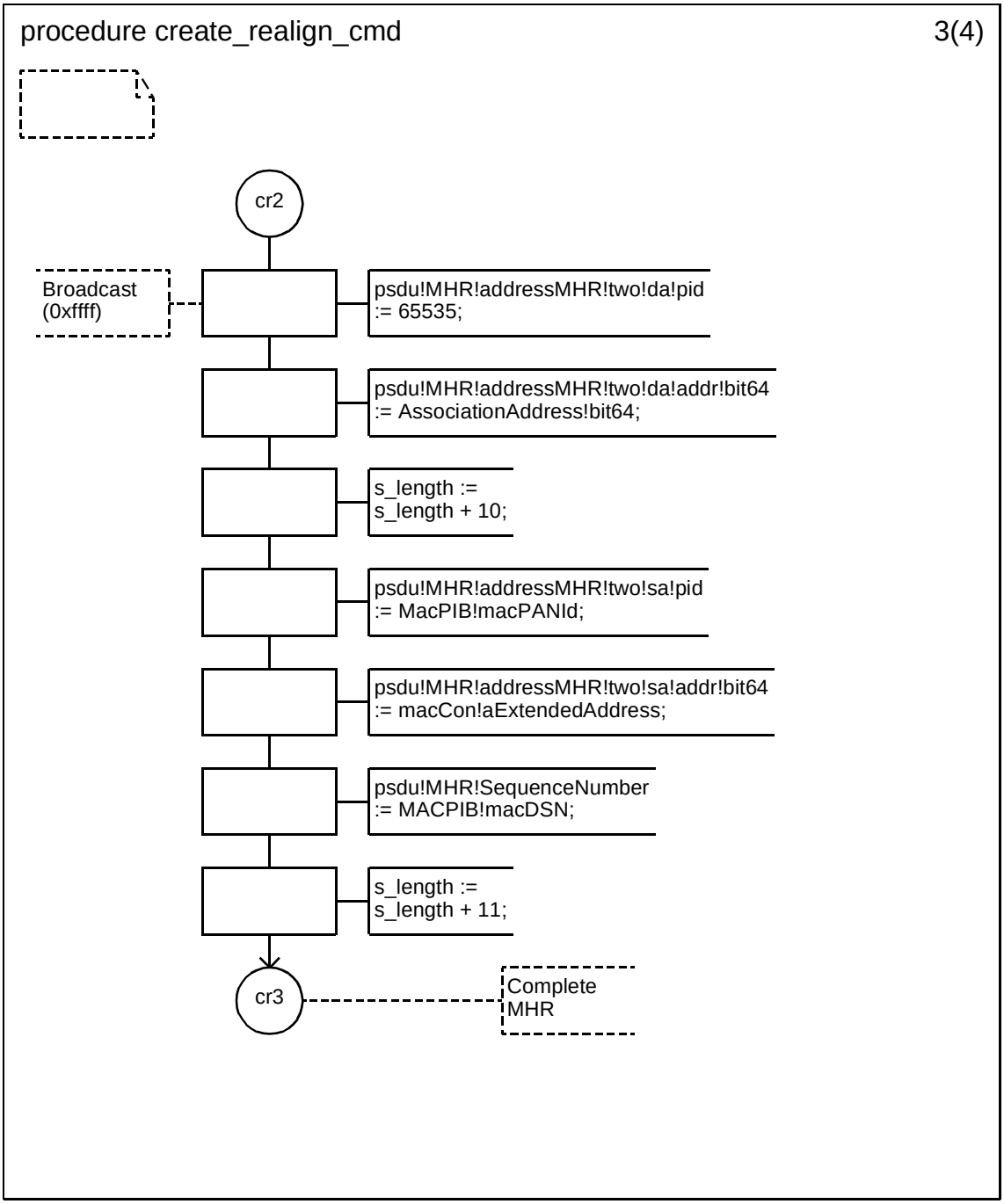


Copyright © 2003 IEEE. All rights reserved.

Authorized licensed use limited to: IEEE - Staff. Downloaded on October 28,2024 at 20:20:02 UTC from IEEE Xplore. Restrictions apply.

INTEL-1011
U.S. Patent 8,219,129

### D.3.1.154.62 Procedure create_realign_cmd (4)

.

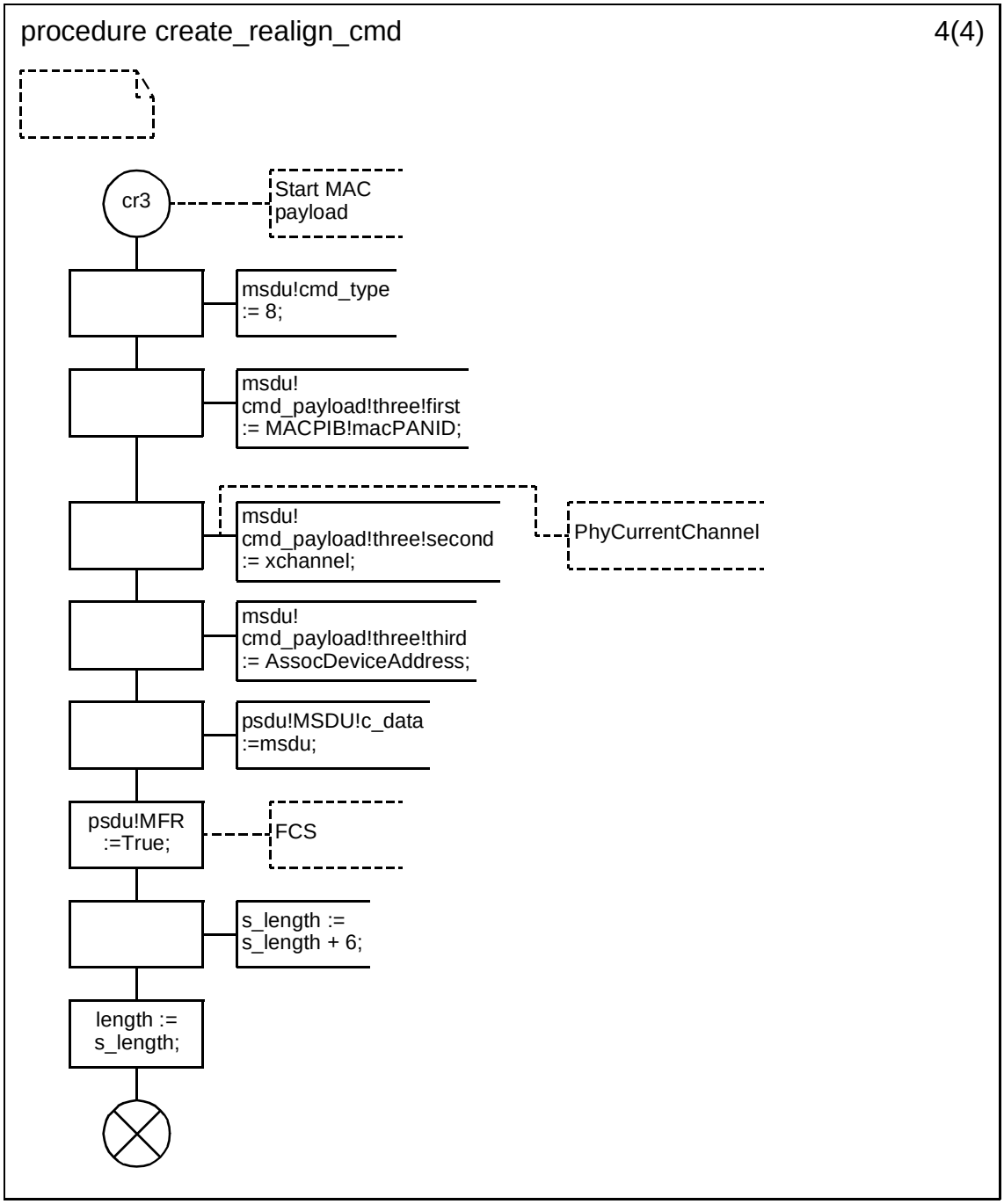



Copyright © 2003 IEEE. All rights reserved.
Authorized licensed use limited to: IEEE - Staff. Downloaded on October 28,2024 at 20:20:02 UTC from IEEE Xplore. Restrictions apply.

INTEL-1011
U.S. Patent 8,219,129

### D.3.1.154.63 Procedure create_realign_B_cmd (1)

.

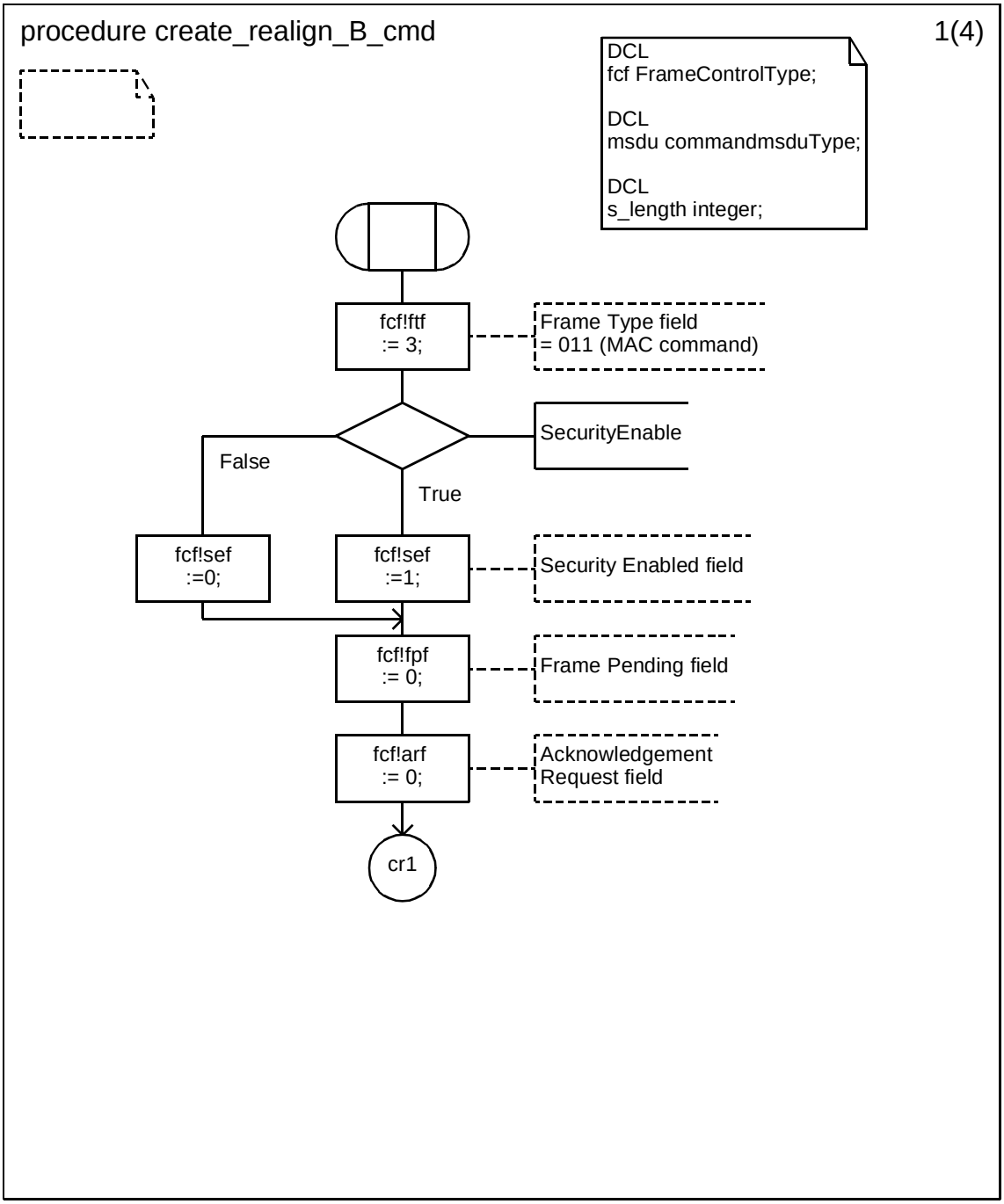


Copyright © 2003 IEEE. All rights reserved.

Authorized licensed use limited to: IEEE - Staff. Downloaded on October 28,2024 at 20:20:02 UTC from IEEE Xplore. Restrictions apply.

INTEL-1011
U.S. Patent 8,219,129

**D.3.1.154.64 Procedure create_realign_B_cmd (2)**

.

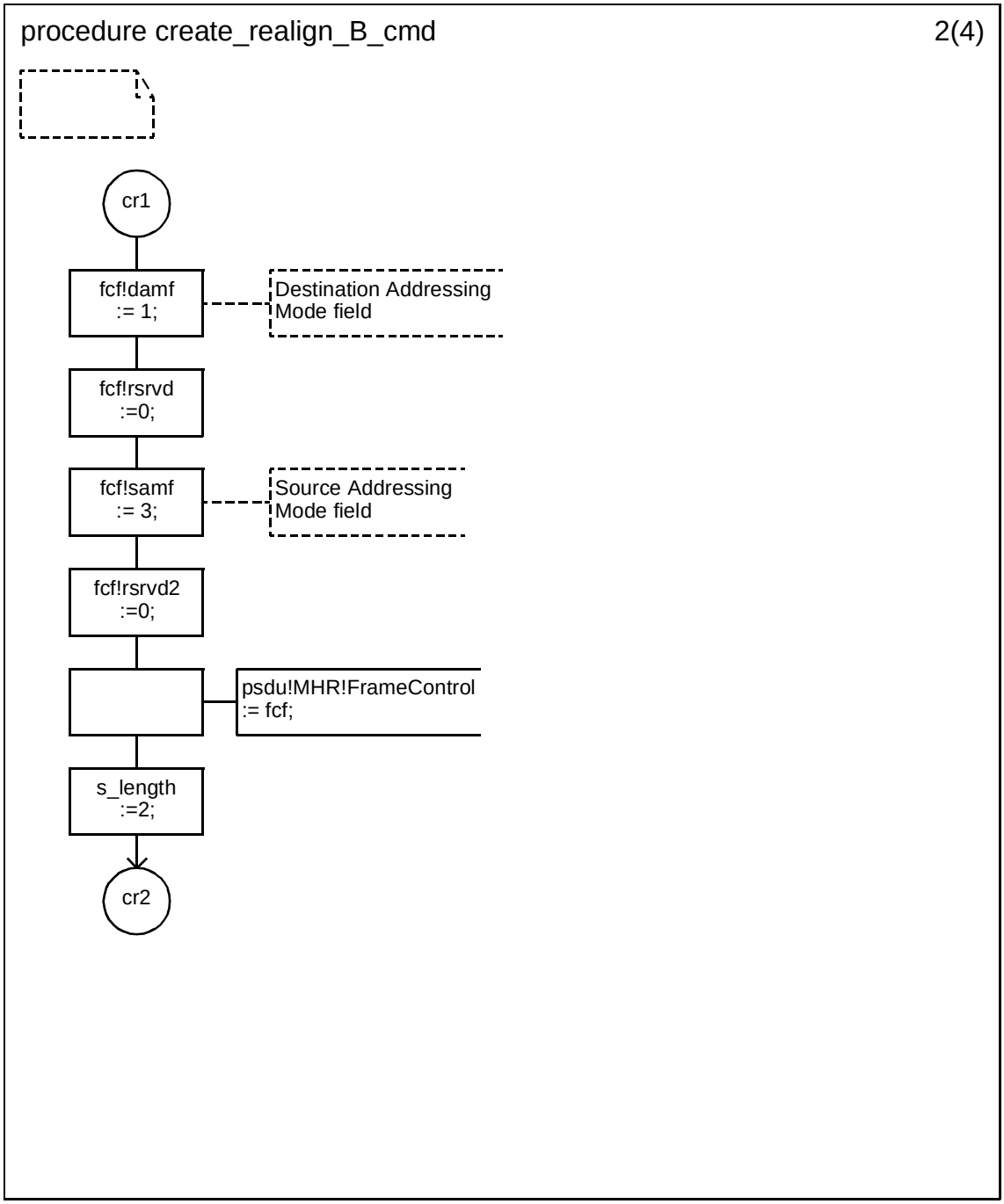



Copyright © 2003 IEEE. All rights reserved.
Authorized licensed use limited to: IEEE - Staff. Downloaded on October 28,2024 at 20:20:02 UTC from IEEE Xplore. Restrictions apply.

INTEL-1011
U.S. Patent 8,219,129

**D.3.1.154.65 Procedure create_realign_B_cmd (3)**

.

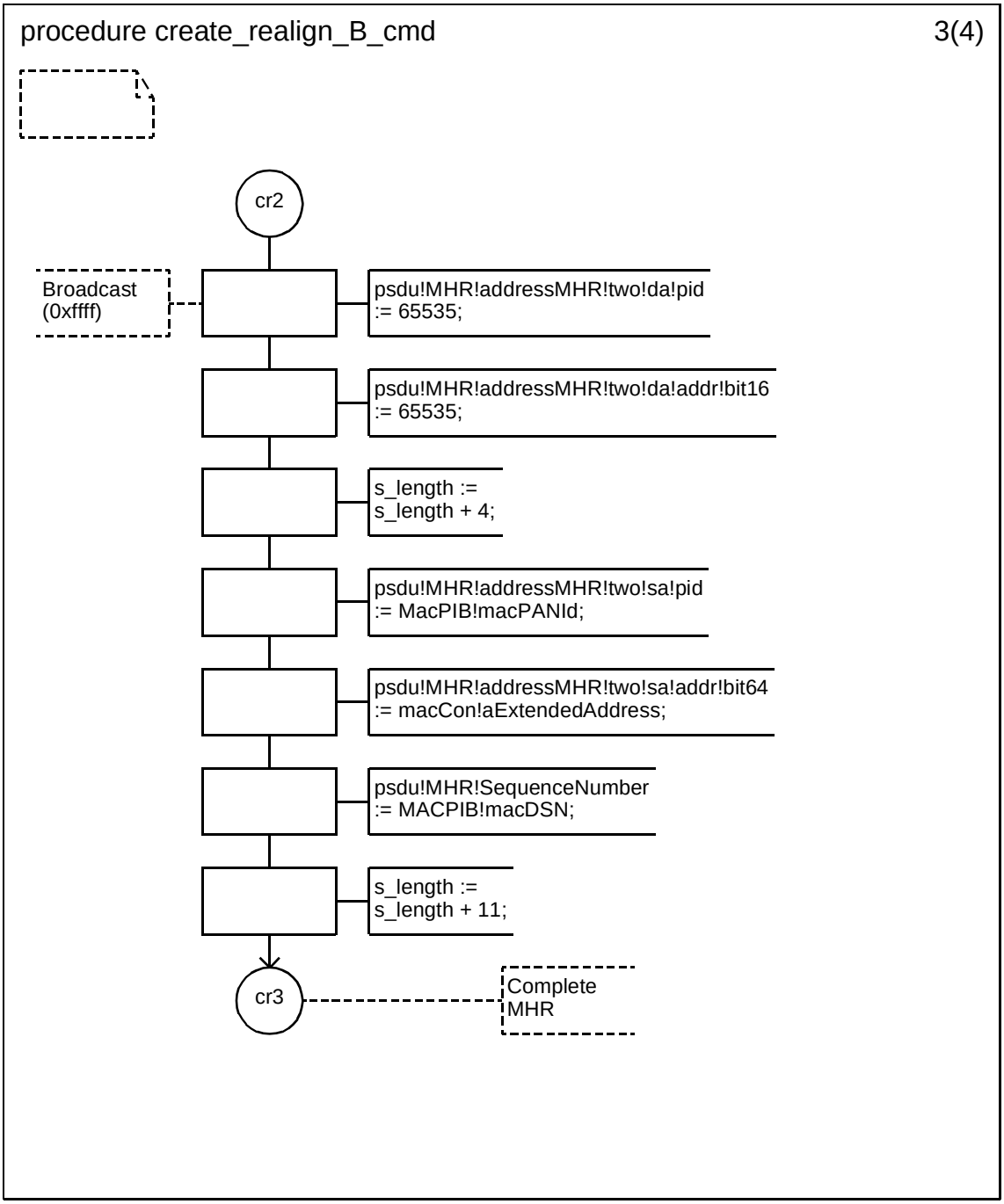


Copyright © 2003 IEEE. All rights reserved.

Authorized licensed use limited to: IEEE - Staff. Downloaded on October 28,2024 at 20:20:02 UTC from IEEE Xplore. Restrictions apply.

INTEL-1011
U.S. Patent 8,219,129

**D.3.1.154.66 Procedure create_realign_B_cmd (4)**

.

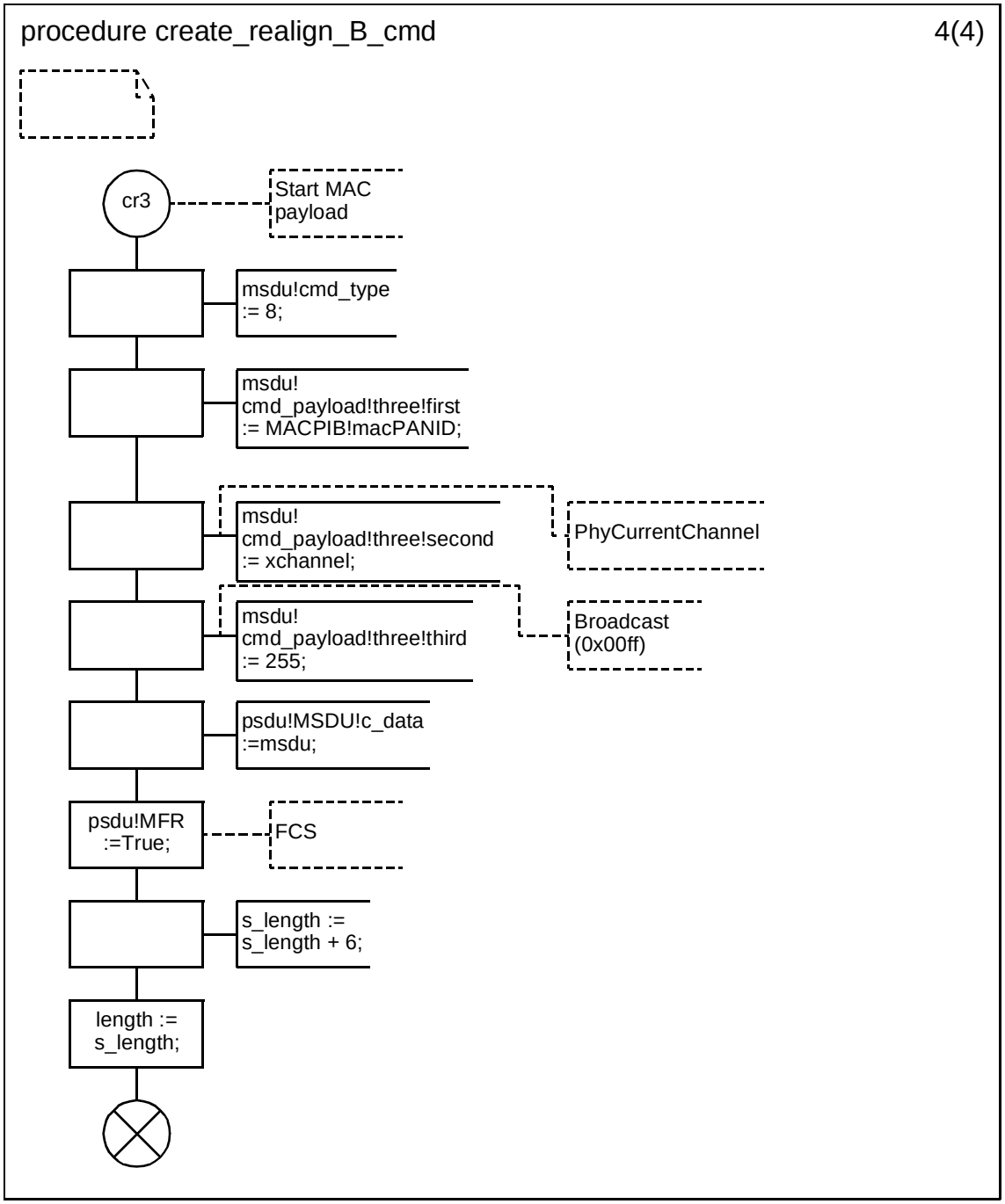



Copyright © 2003 IEEE. All rights reserved.
Authorized licensed use limited to: IEEE - Staff. Downloaded on October 28,2024 at 20:20:02 UTC from IEEE Xplore. Restrictions apply.

INTEL-1011
U.S. Patent 8,219,129

### D.3.1.154.67 Procedure create_GTS_request (1)

.

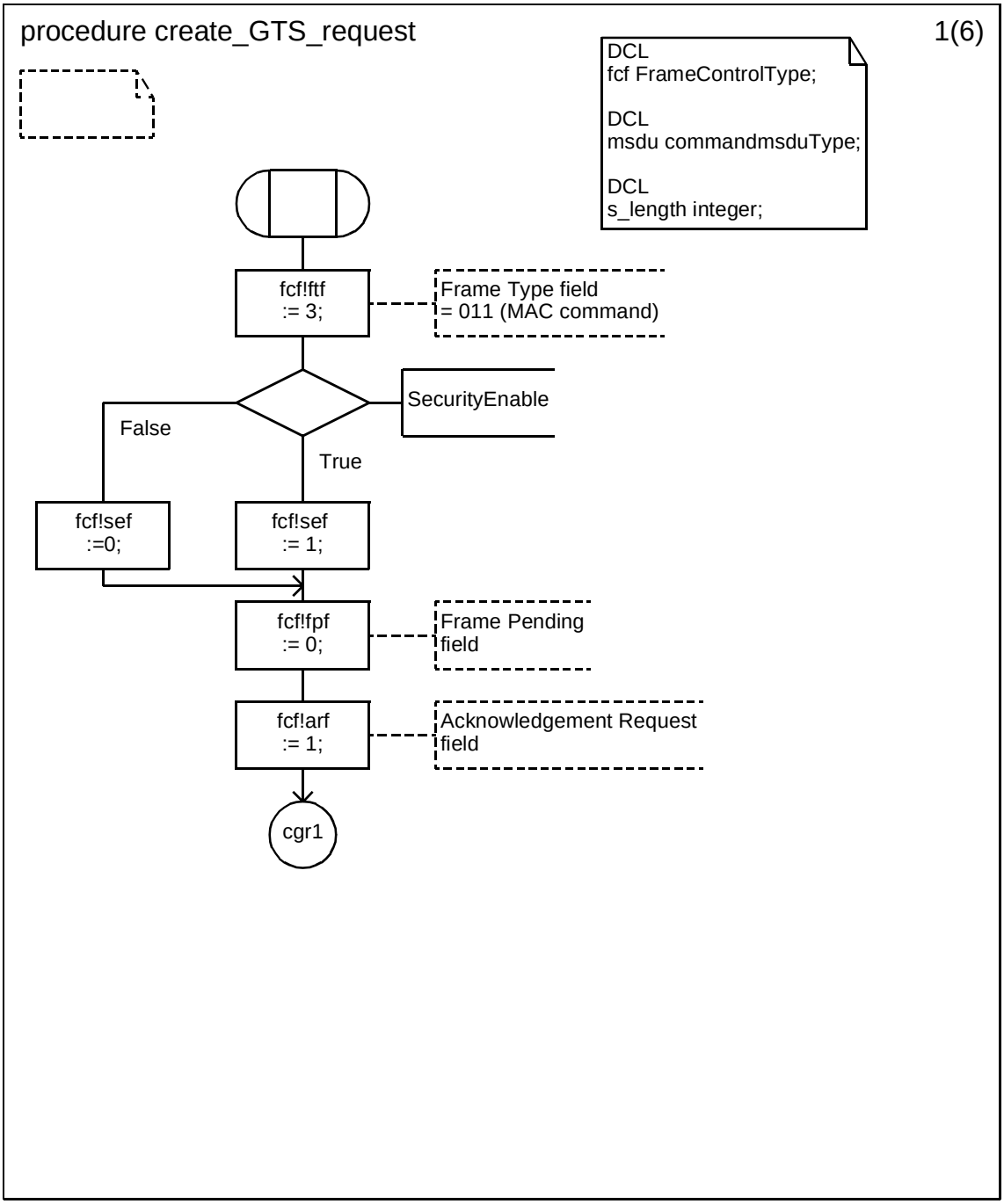


Copyright © 2003 IEEE. All rights reserved.

Authorized licensed use limited to: IEEE - Staff. Downloaded on October 28,2024 at 20:20:02 UTC from IEEE Xplore. Restrictions apply.

INTEL-1011
U.S. Patent 8,219,129

**D.3.1.154.68 Procedure create_GTS_request (2)**

.

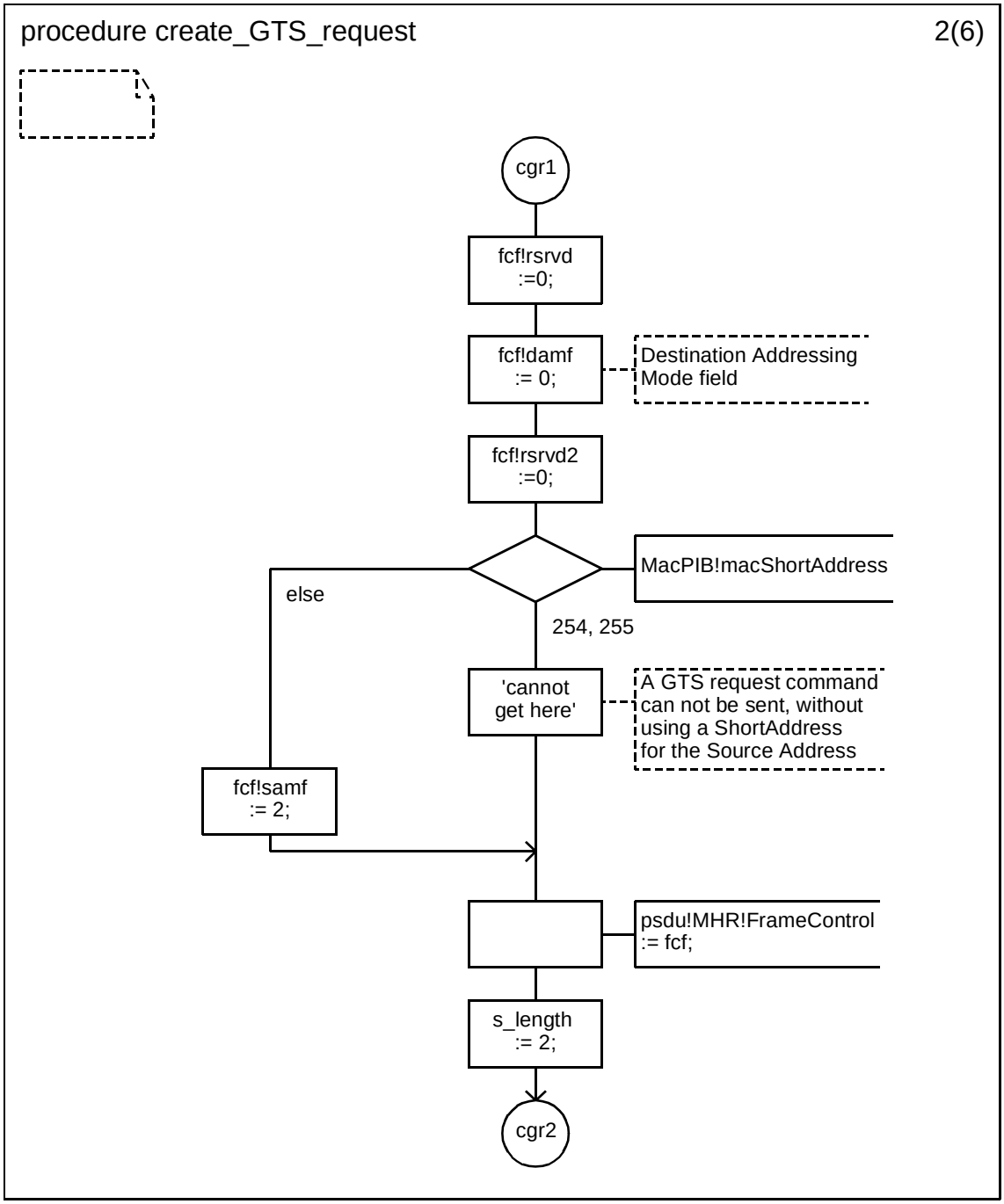



Copyright © 2003 IEEE. All rights reserved.
Authorized licensed use limited to: IEEE - Staff. Downloaded on October 28,2024 at 20:20:02 UTC from IEEE Xplore. Restrictions apply.

INTEL-1011
U.S. Patent 8,219,129

**D.3.1.154.69 Procedure create_GTS_request (3)**

.

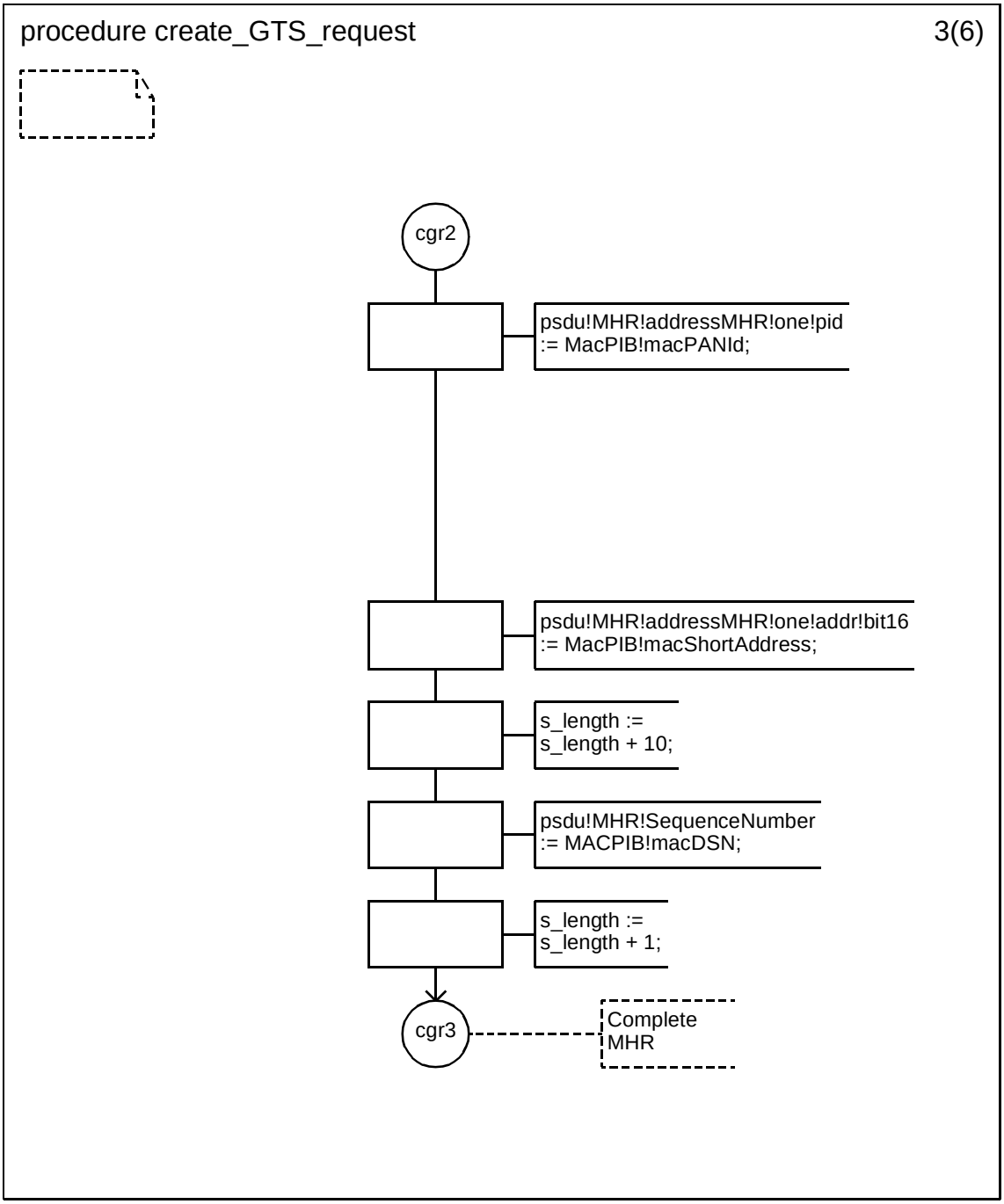


Copyright © 2003 IEEE. All rights reserved.

Authorized licensed use limited to: IEEE - Staff. Downloaded on October 28,2024 at 20:20:02 UTC from IEEE Xplore. Restrictions apply.

INTEL-1011
U.S. Patent 8,219,129

**D.3.1.154.70 Procedure create_GTS_request (4)**

.

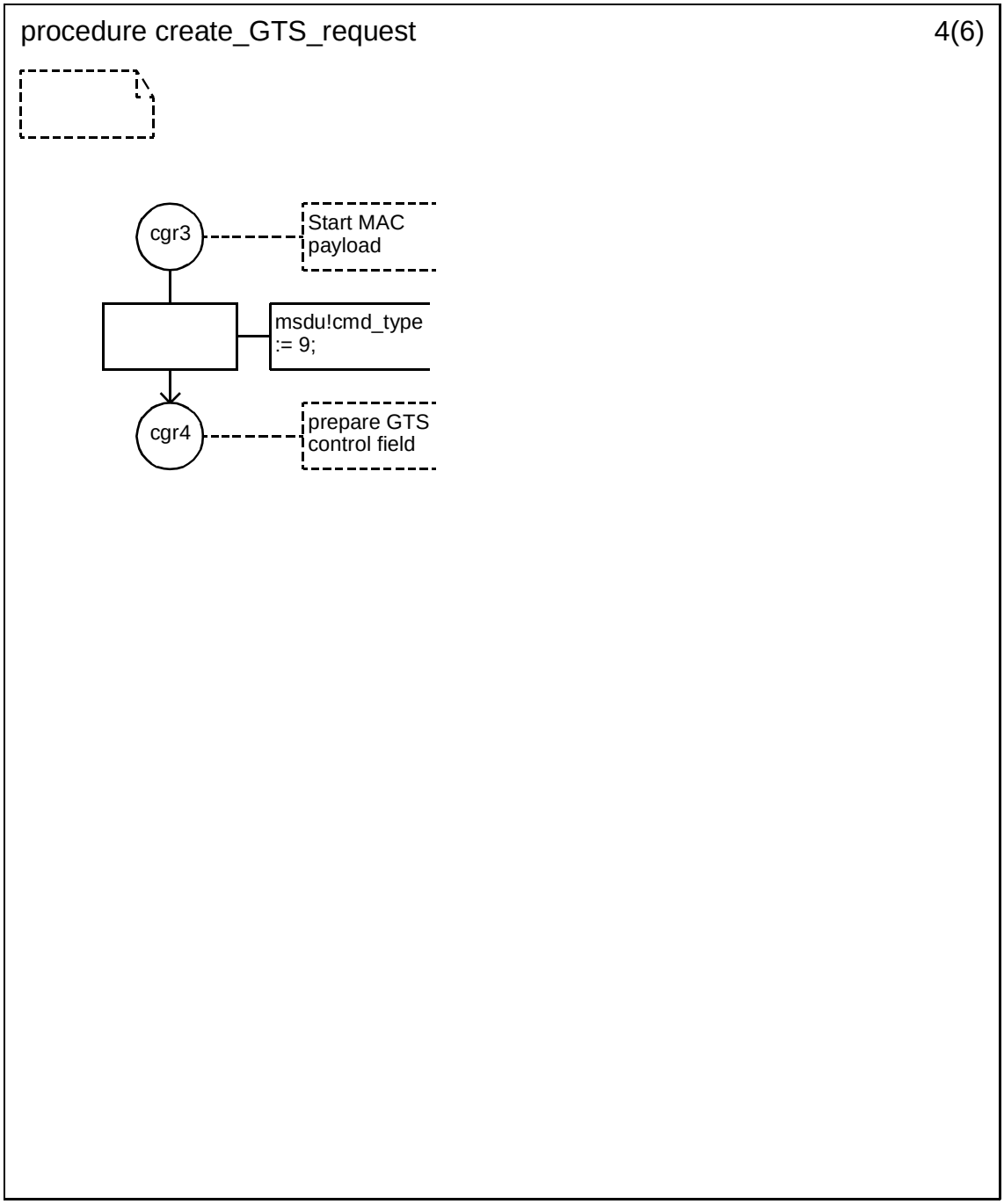



Copyright © 2003 IEEE. All rights reserved.
Authorized licensed use limited to: IEEE - Staff. Downloaded on October 28,2024 at 20:20:02 UTC from IEEE Xplore. Restrictions apply.

INTEL-1011
U.S. Patent 8,219,129

### D.3.1.154.71 Procedure create_GTS_request (5)

.

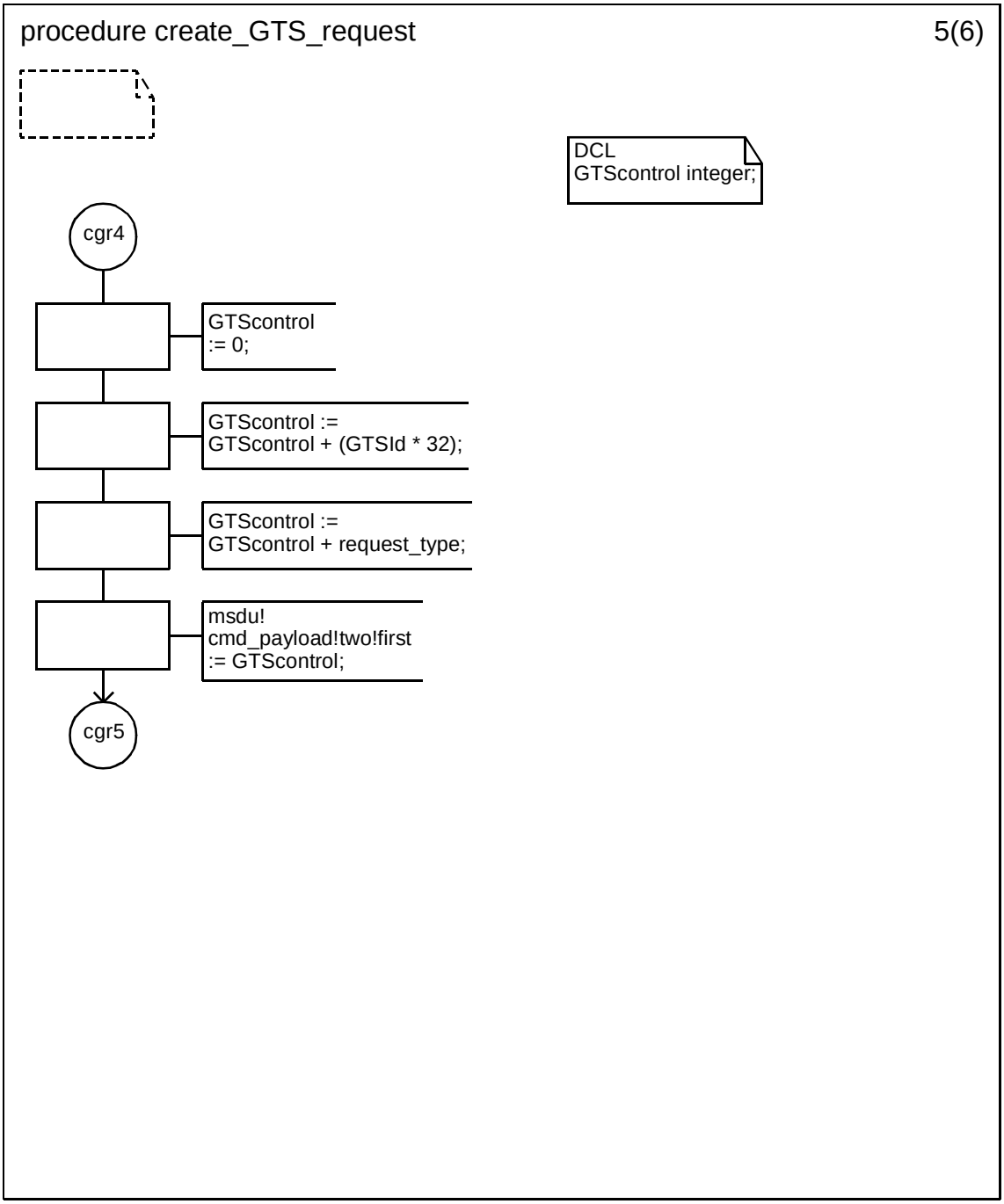


Copyright © 2003 IEEE. All rights reserved.

Authorized licensed use limited to: IEEE - Staff. Downloaded on October 28,2024 at 20:20:02 UTC from IEEE Xplore. Restrictions apply.

INTEL-1011
U.S. Patent 8,219,129

**D.3.1.154.72 Procedure create_GTS_request (6)**

.

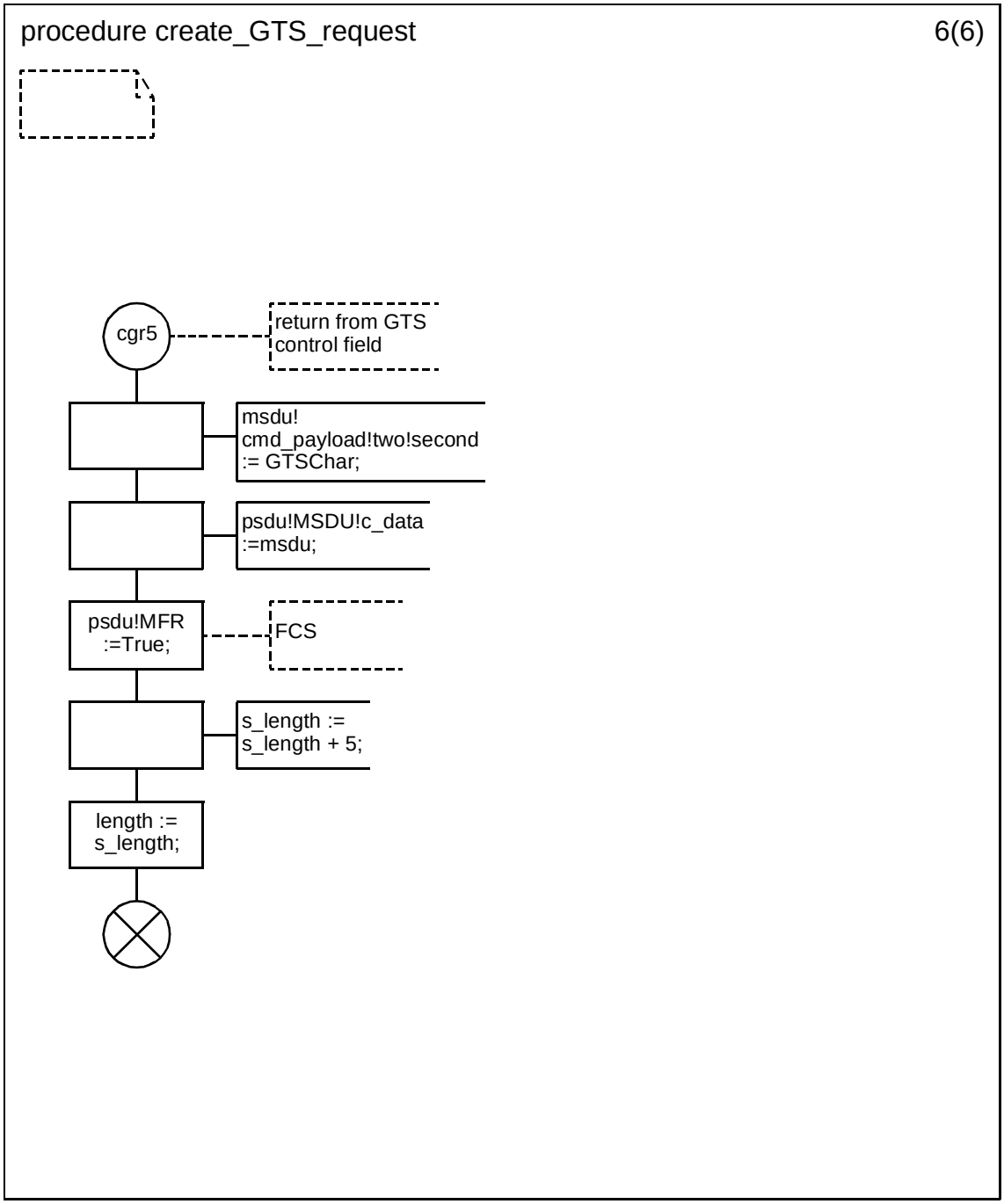



Copyright © 2003 IEEE. All rights reserved.
Authorized licensed use limited to: IEEE - Staff. Downloaded on October 28,2024 at 20:20:02 UTC from IEEE Xplore. Restrictions apply.

INTEL-1011
U.S. Patent 8,219,129

### D.3.1.154.73 Procedure create_GTS_allocation (1)

.

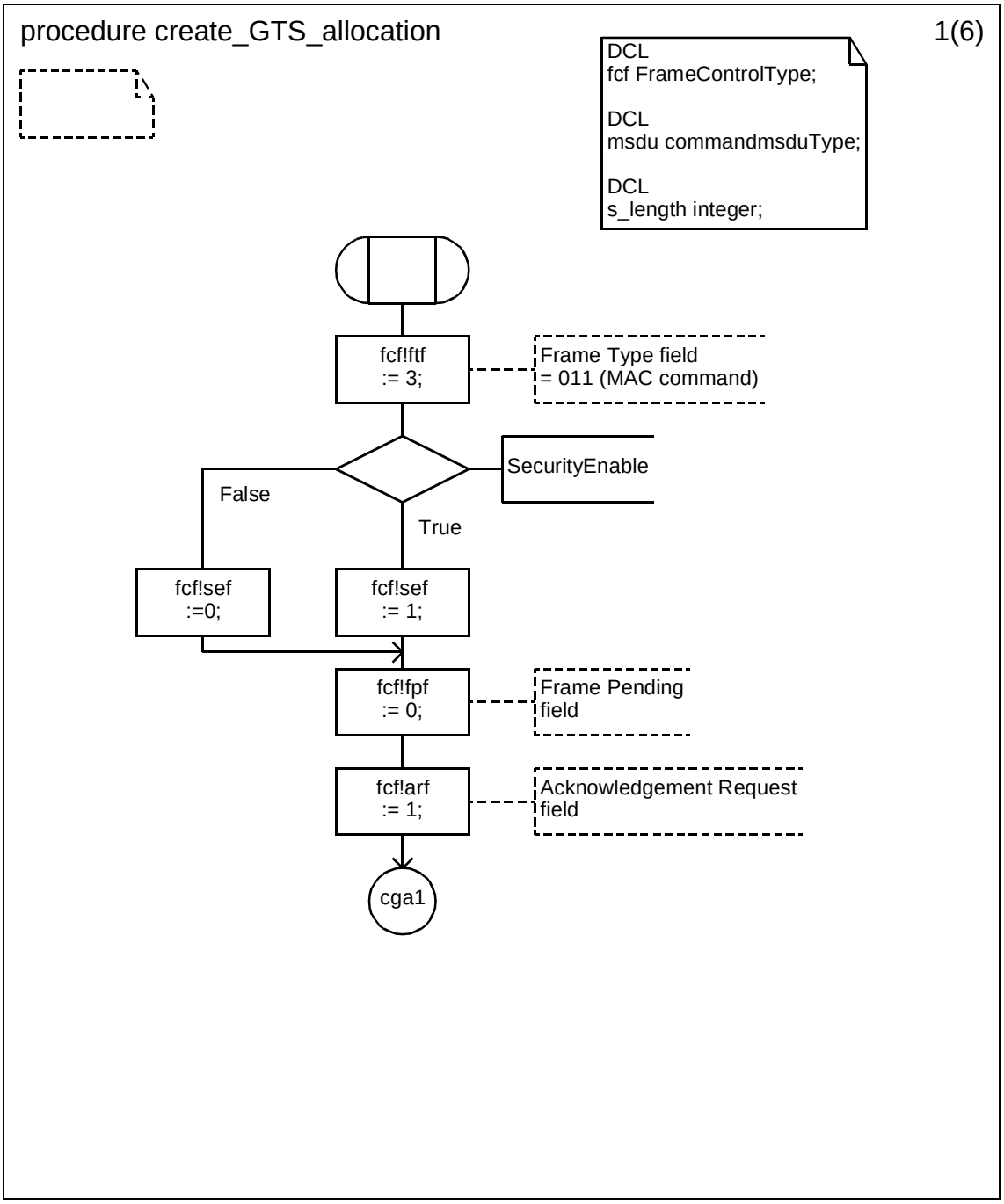


Copyright © 2003 IEEE. All rights reserved.

Authorized licensed use limited to: IEEE - Staff. Downloaded on October 28,2024 at 20:20:02 UTC from IEEE Xplore. Restrictions apply.

INTEL-1011
U.S. Patent 8,219,129

**D.3.1.154.74 Procedure create_GTS_allocation (2)**

.

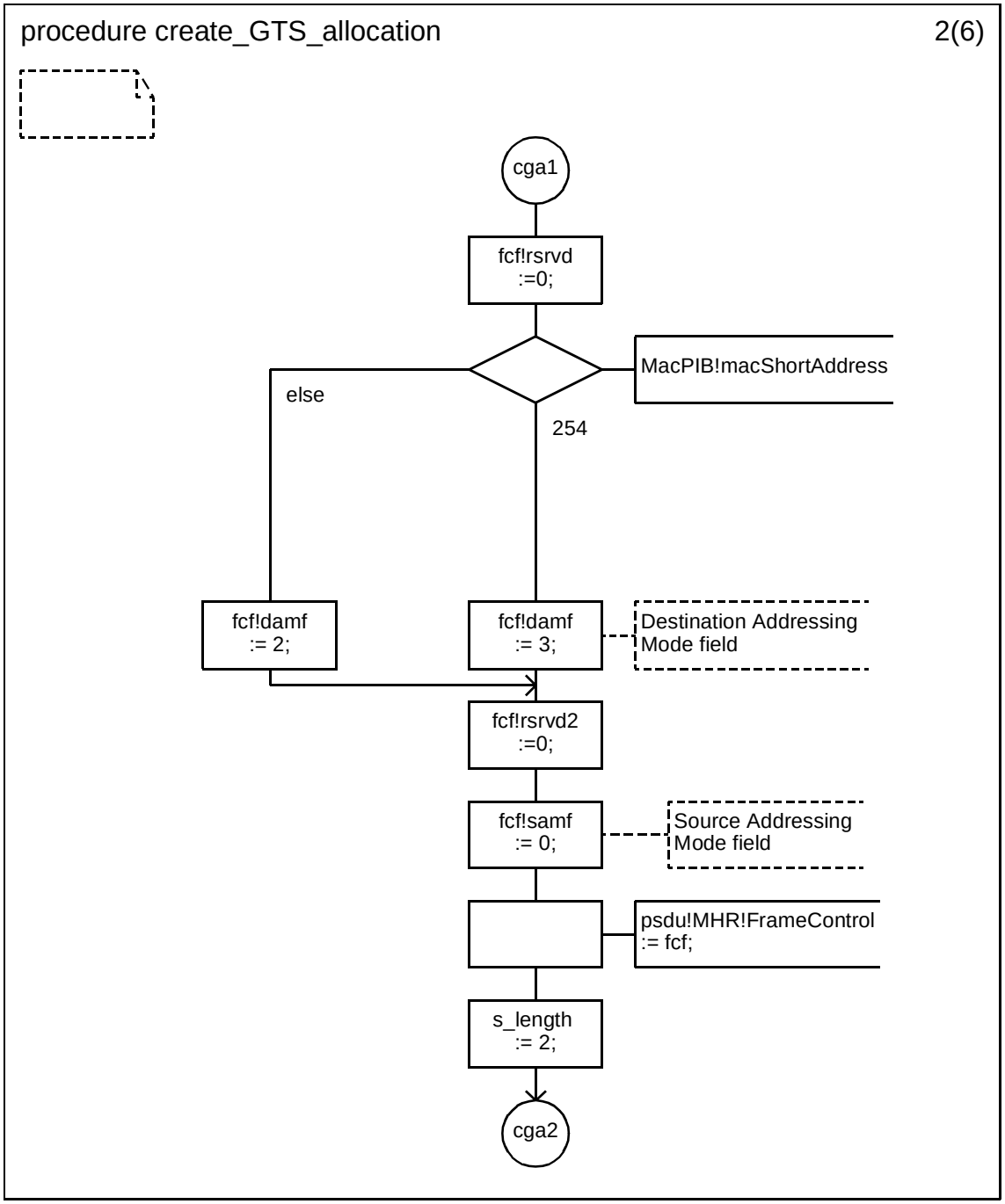



Copyright © 2003 IEEE. All rights reserved.
Authorized licensed use limited to: IEEE - Staff. Downloaded on October 28,2024 at 20:20:02 UTC from IEEE Xplore. Restrictions apply.

INTEL-1011
U.S. Patent 8,219,129

### D.3.1.154.75 Procedure create_GTS_allocation (3)

.

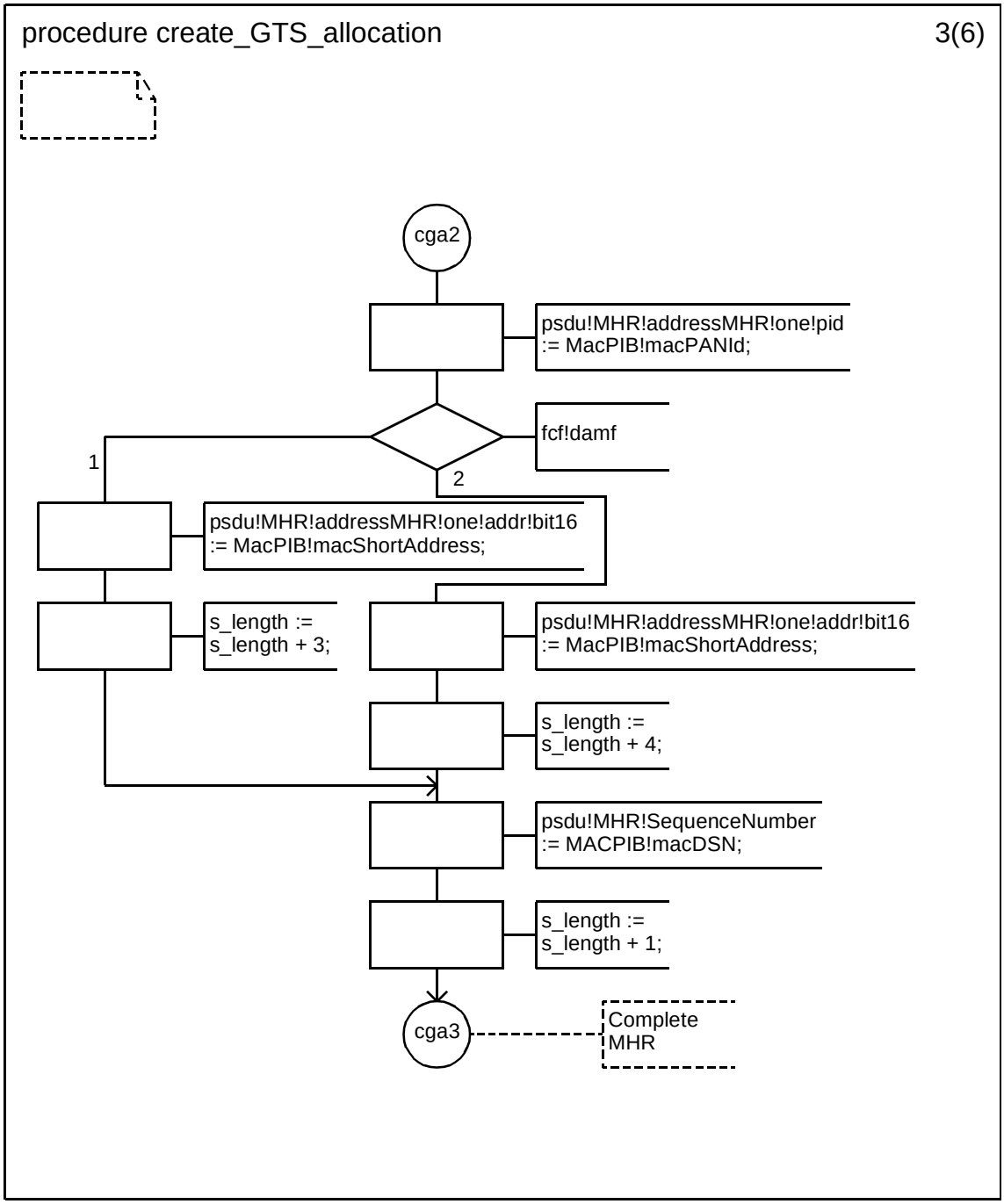


Copyright © 2003 IEEE. All rights reserved.

Authorized licensed use limited to: IEEE - Staff. Downloaded on October 28,2024 at 20:20:02 UTC from IEEE Xplore. Restrictions apply.

INTEL-1011
U.S. Patent 8,219,129

**D.3.1.154.76 Procedure create_GTS_allocation (4)**

.

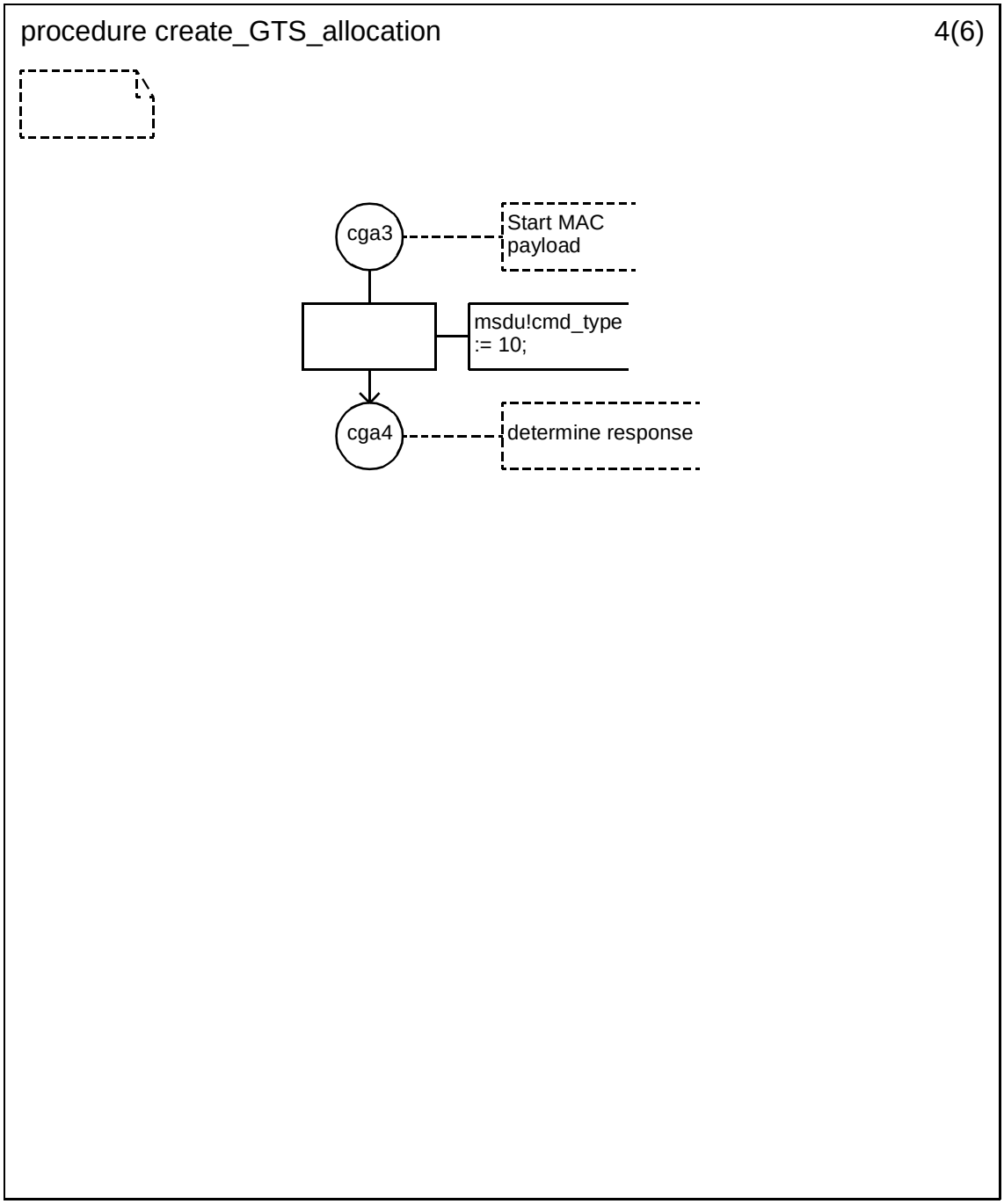



Copyright © 2003 IEEE. All rights reserved.
Authorized licensed use limited to: IEEE - Staff. Downloaded on October 28,2024 at 20:20:02 UTC from IEEE Xplore. Restrictions apply.

INTEL-1011
U.S. Patent 8,219,129

### D.3.1.154.77 Procedure create_GTS_allocation (5)

.

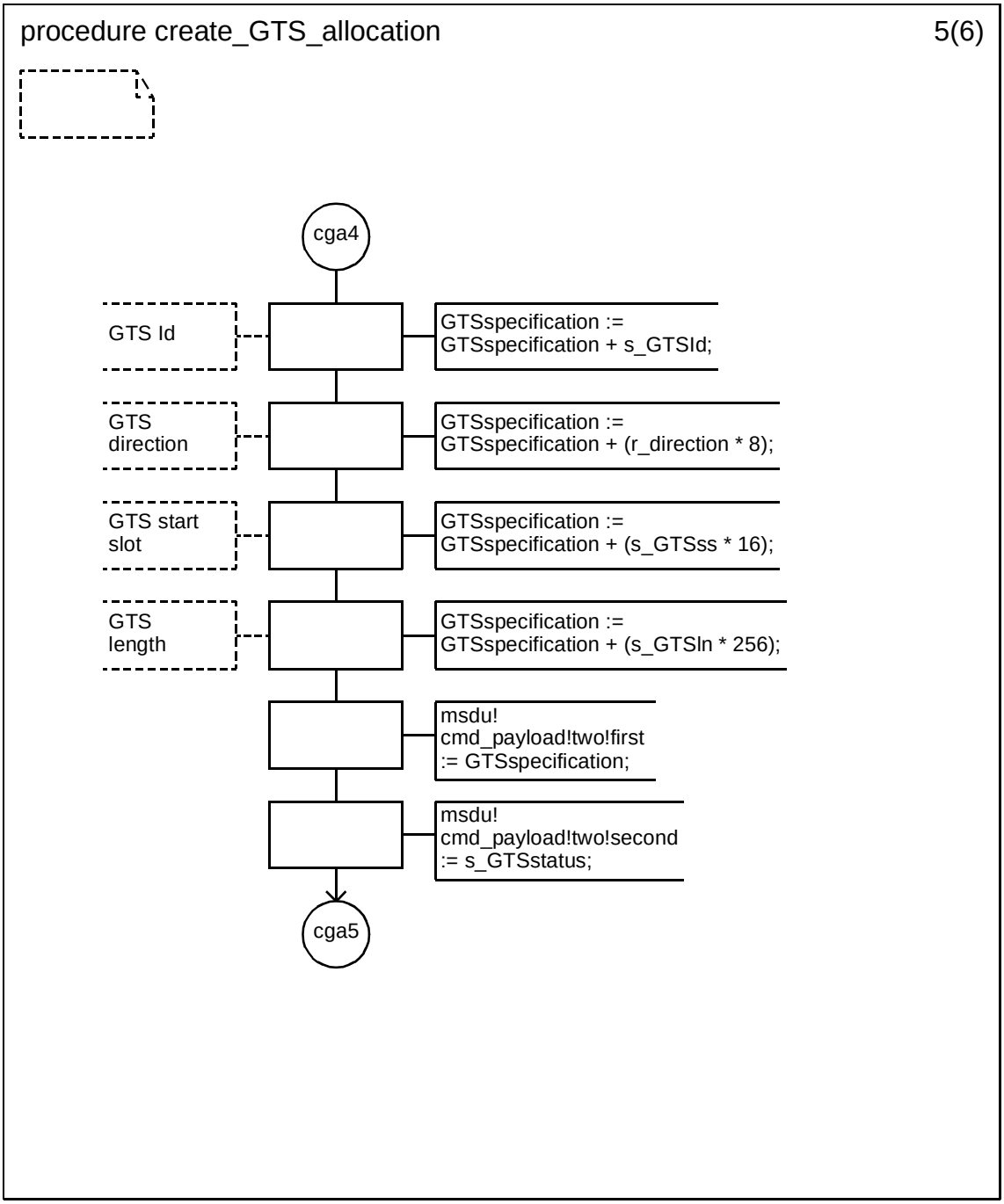


Copyright © 2003 IEEE. All rights reserved.

Authorized licensed use limited to: IEEE - Staff. Downloaded on October 28,2024 at 20:20:02 UTC from IEEE Xplore. Restrictions apply.

INTEL-1011
U.S. Patent 8,219,129

**D.3.1.154.78 Procedure create_GTS_allocation (6)**

.

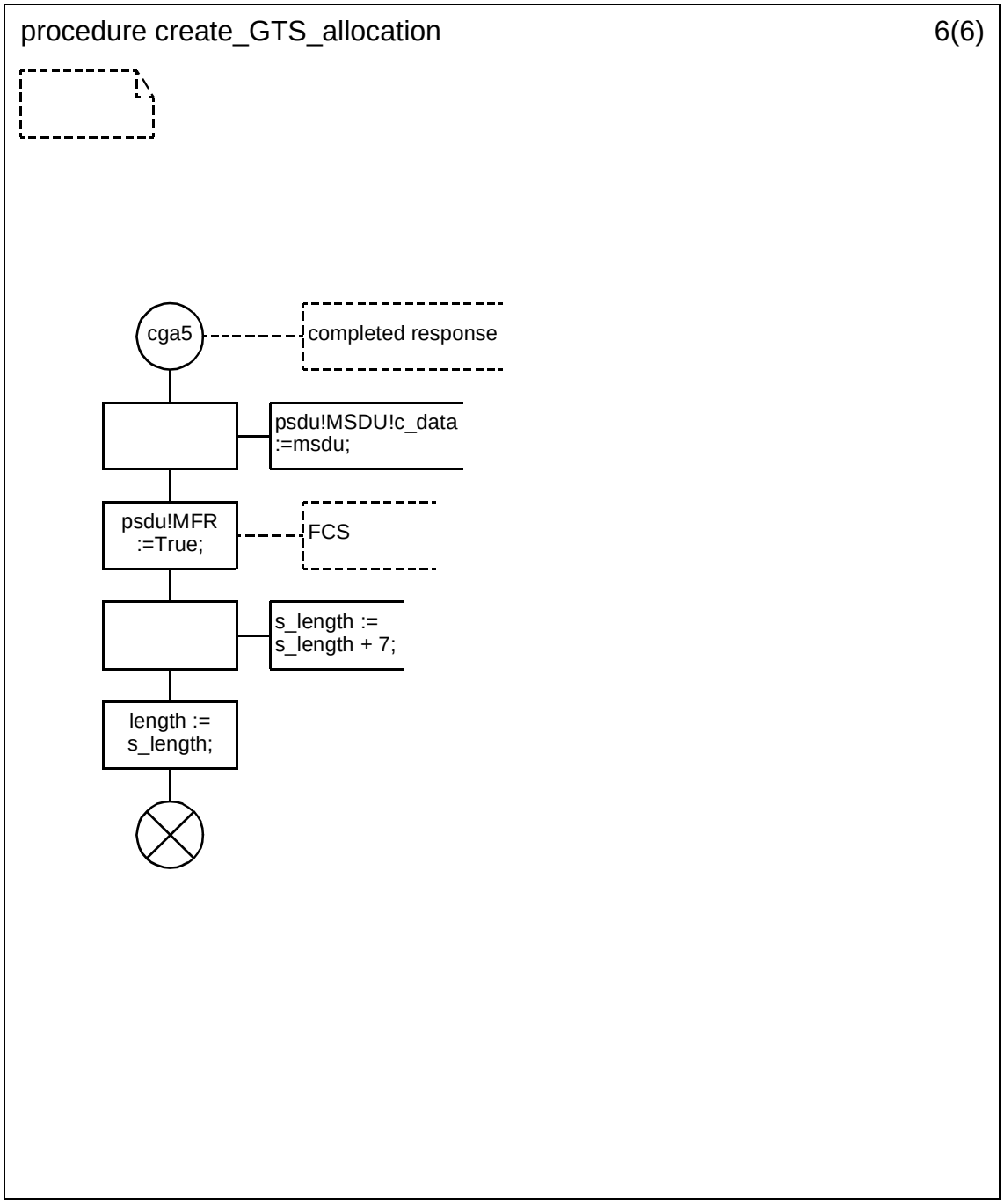



Copyright © 2003 IEEE. All rights reserved.
Authorized licensed use limited to: IEEE - Staff. Downloaded on October 28,2024 at 20:20:02 UTC from IEEE Xplore. Restrictions apply.

INTEL-1011
U.S. Patent 8,219,129

**D.3.1.154.79 Procedure parse_MPDU (1)**

.

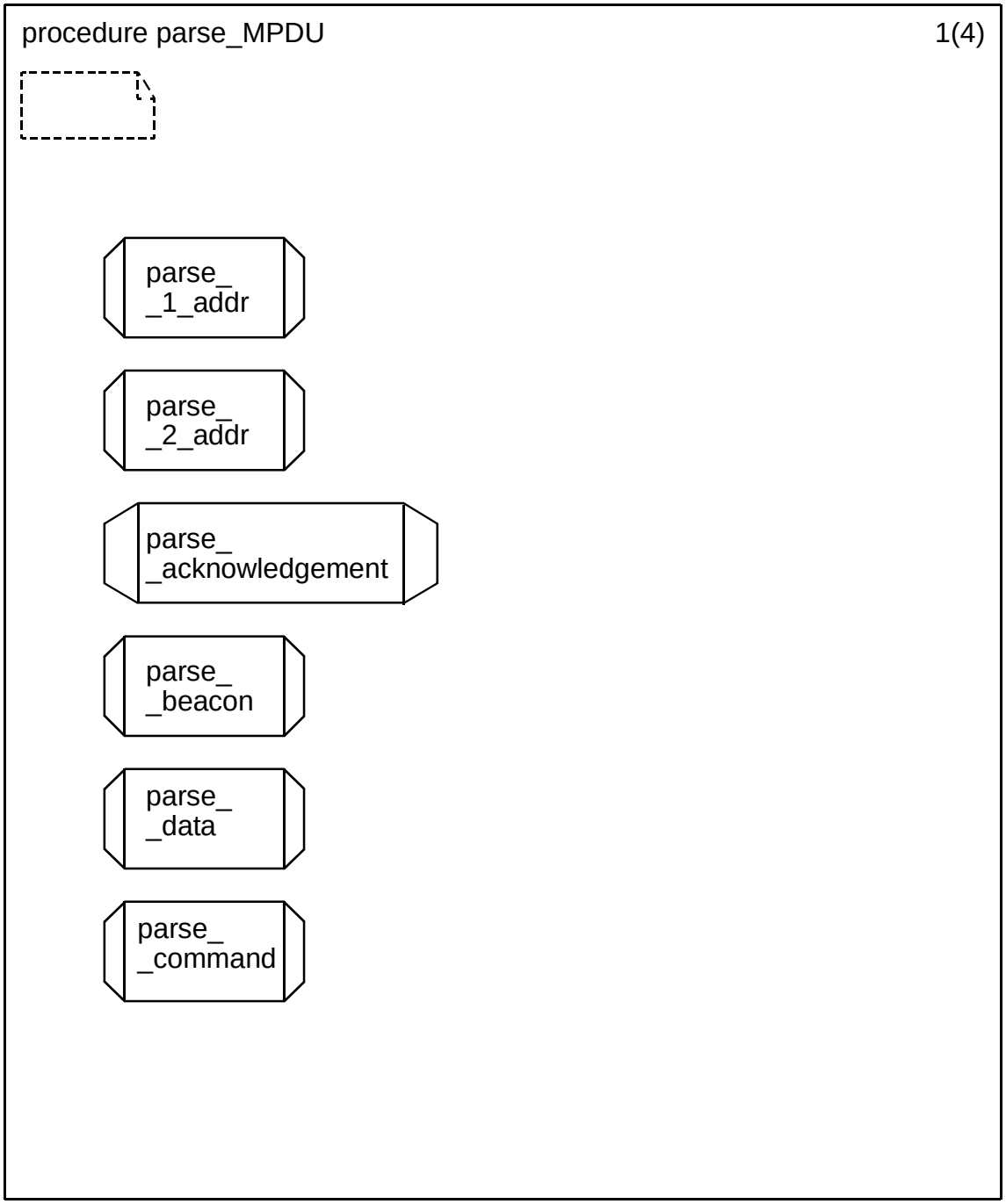


Copyright © 2003 IEEE. All rights reserved.

Authorized licensed use limited to: IEEE - Staff. Downloaded on October 28,2024 at 20:20:02 UTC from IEEE Xplore. Restrictions apply.

INTEL-1011
U.S. Patent 8,219,129

**D.3.1.154.80 Procedure parse_MPDU (2)**

.

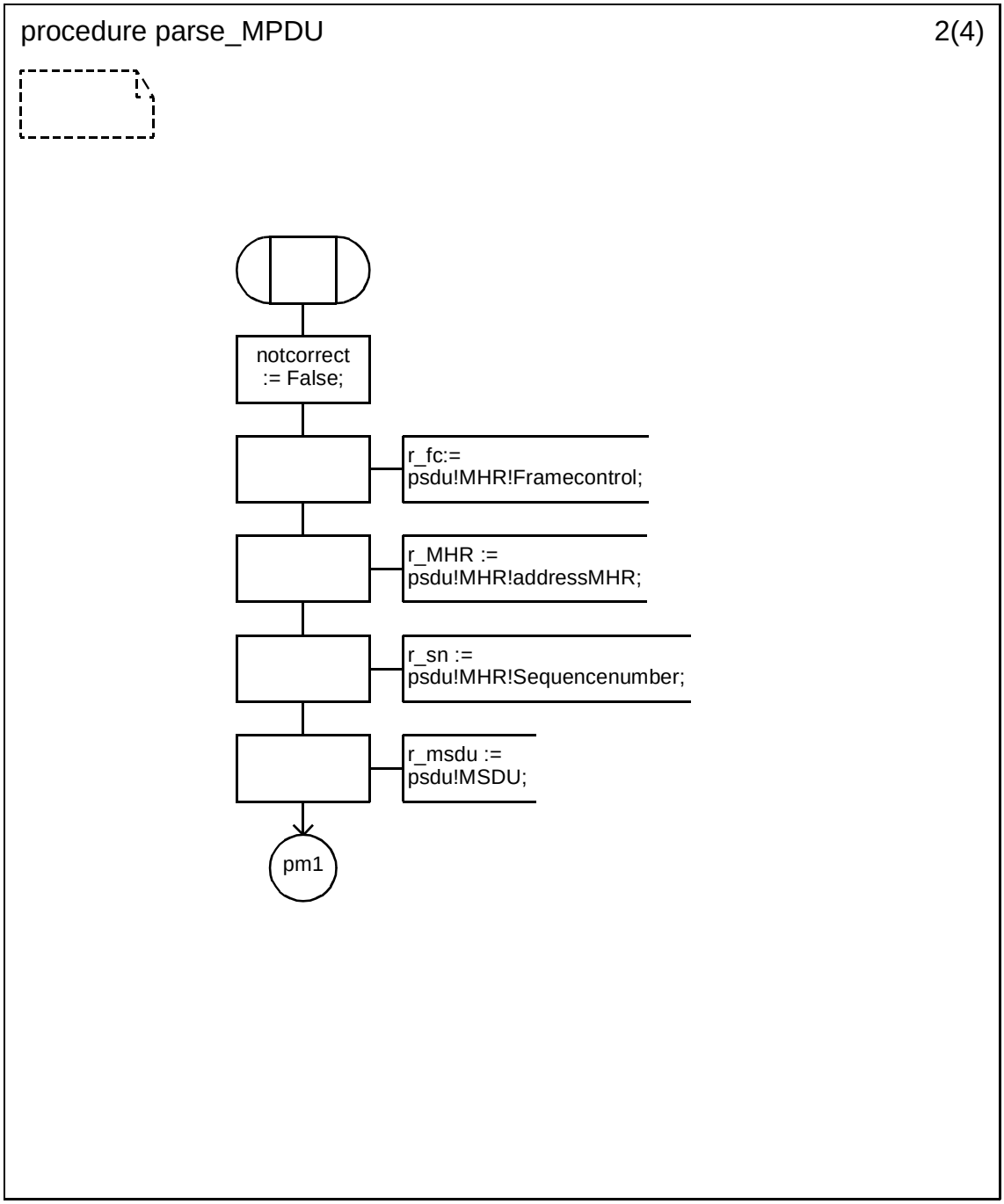



Copyright © 2003 IEEE. All rights reserved.
Authorized licensed use limited to: IEEE - Staff. Downloaded on October 28,2024 at 20:20:02 UTC from IEEE Xplore. Restrictions apply.

INTEL-1011
U.S. Patent 8,219,129

**D.3.1.154.81 Procedure parse_MPDU (3)**

.

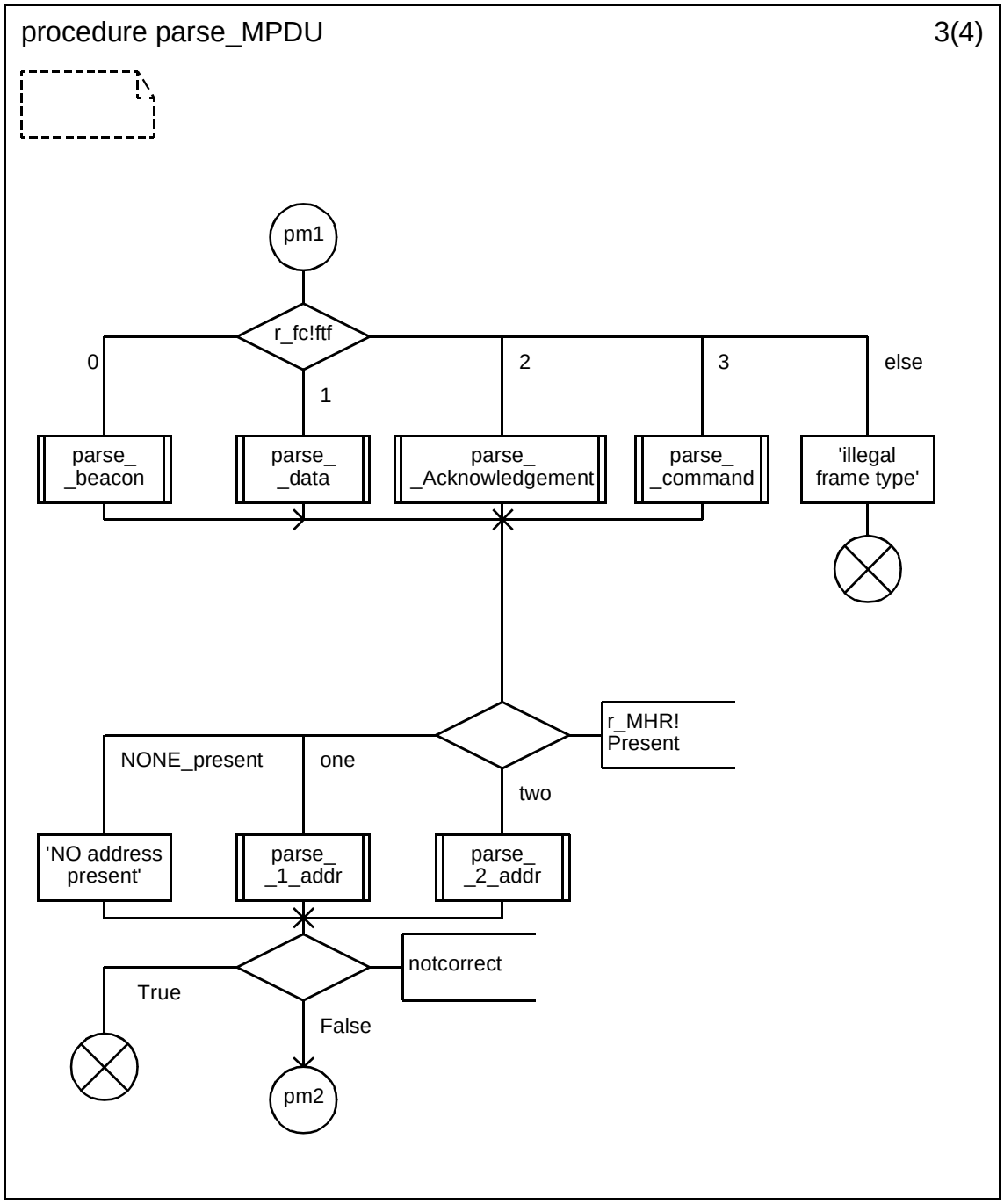


Copyright © 2003 IEEE. All rights reserved.

Authorized licensed use limited to: IEEE - Staff. Downloaded on October 28,2024 at 20:20:02 UTC from IEEE Xplore. Restrictions apply.

INTEL-1011
U.S. Patent 8,219,129

**D.3.1.154.82 Procedure parse_MPDU (4)**

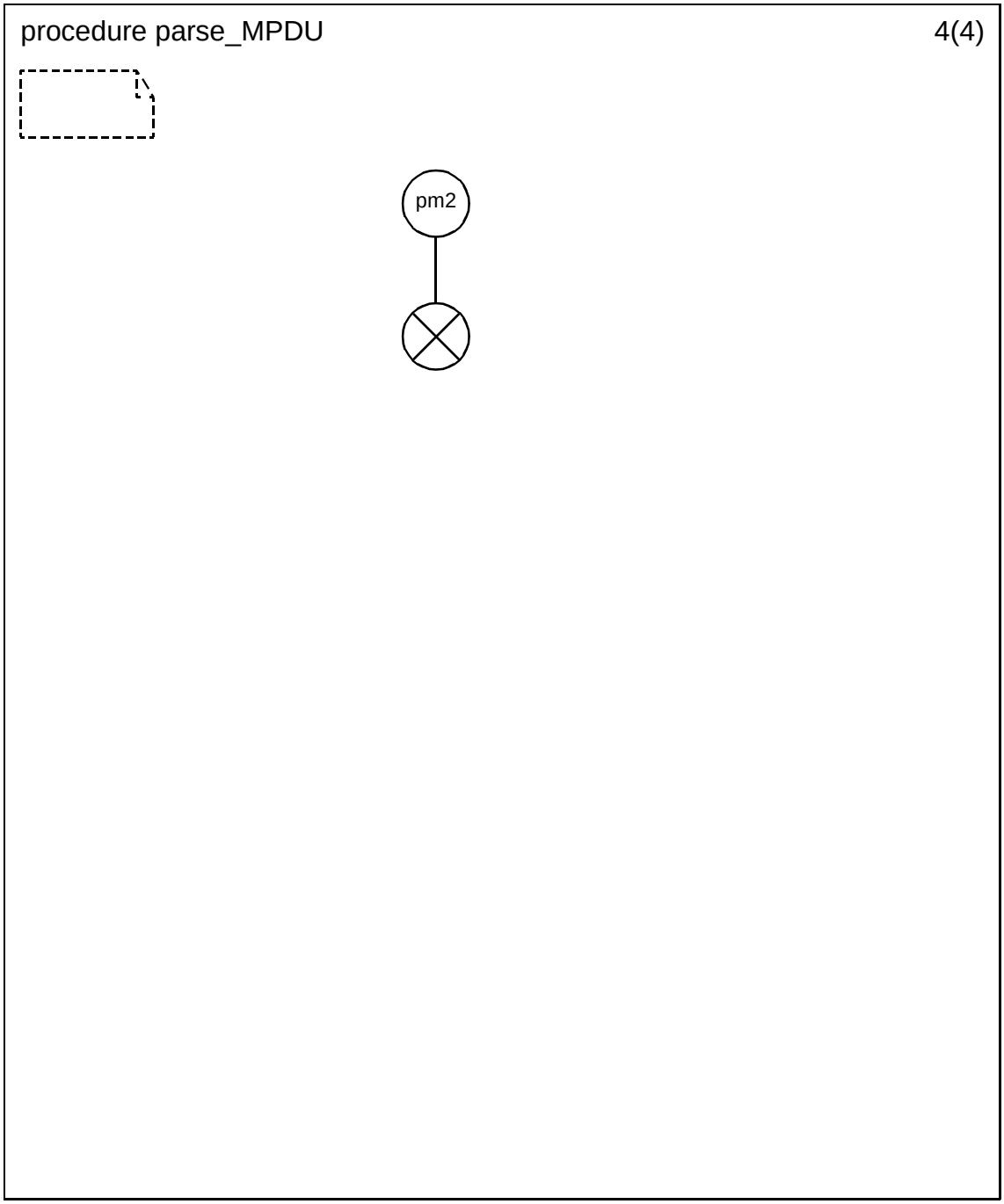



Copyright © 2003 IEEE. All rights reserved.
Authorized licensed use limited to: IEEE - Staff. Downloaded on October 28,2024 at 20:20:02 UTC from IEEE Xplore. Restrictions apply.

INTEL-1011
U.S. Patent 8,219,129

**D.3.1.154.82.1 Procedure parse_1_addr (1)**

.

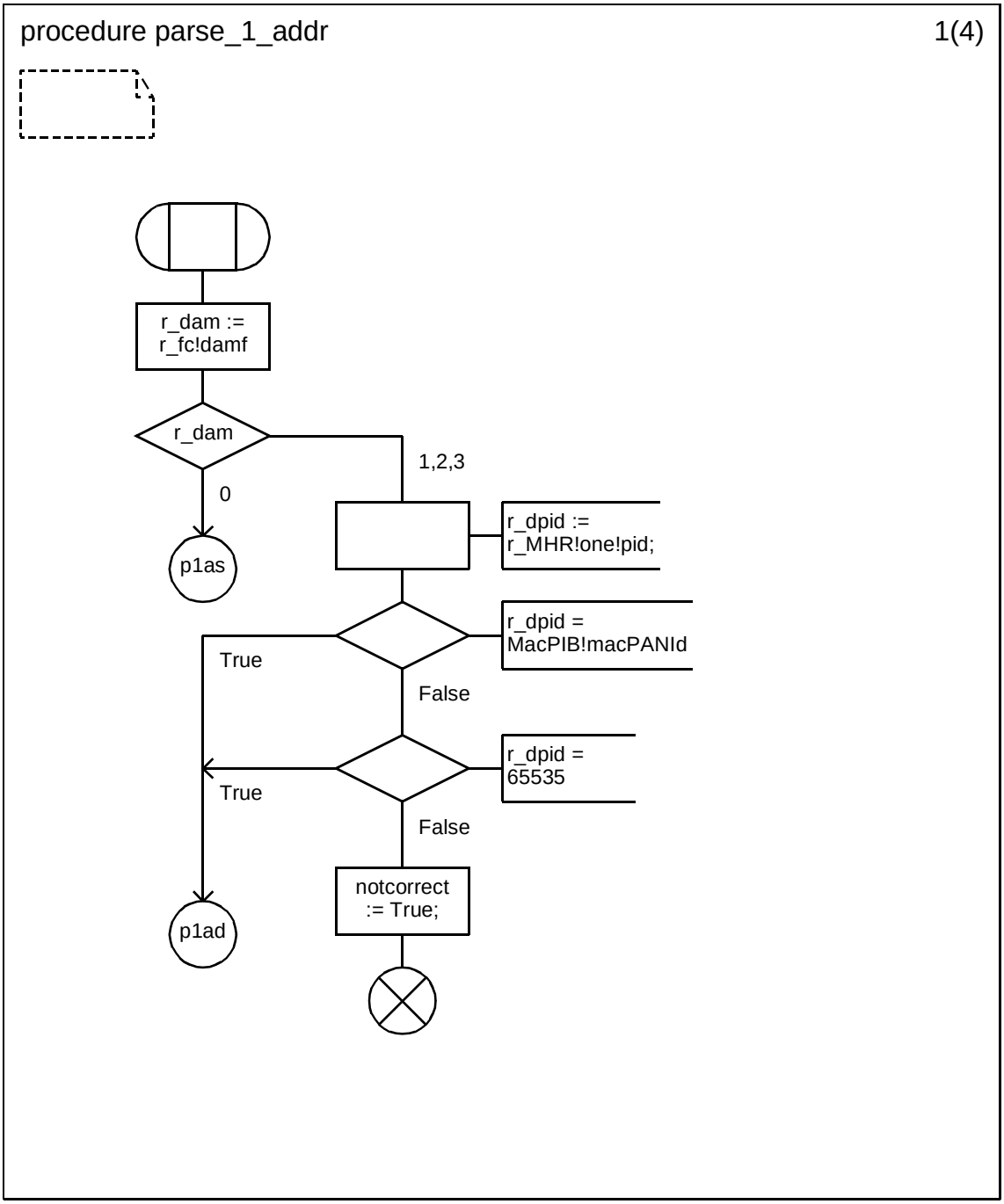


Copyright © 2003 IEEE. All rights reserved.

Authorized licensed use limited to: IEEE - Staff. Downloaded on October 28,2024 at 20:20:02 UTC from IEEE Xplore. Restrictions apply.

INTEL-1011
U.S. Patent 8,219,129

**D.3.1.154.82.2 Procedure parse_1_addr (2)**

.

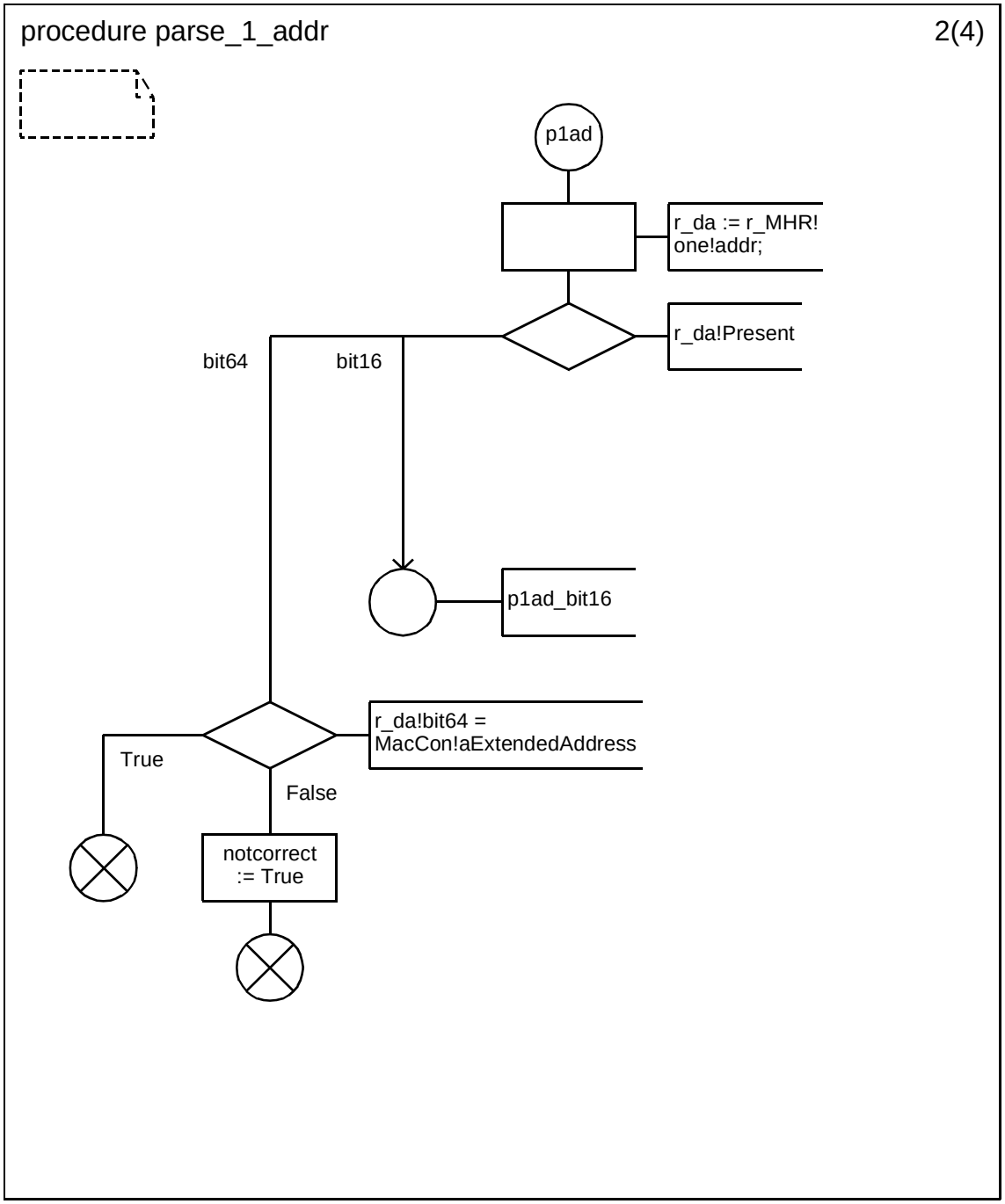



Copyright © 2003 IEEE. All rights reserved.
Authorized licensed use limited to: IEEE - Staff. Downloaded on October 28,2024 at 20:20:02 UTC from IEEE Xplore. Restrictions apply.

INTEL-1011
U.S. Patent 8,219,129

**D.3.1.154.82.3 Procedure parse_1_addr (3)**

.

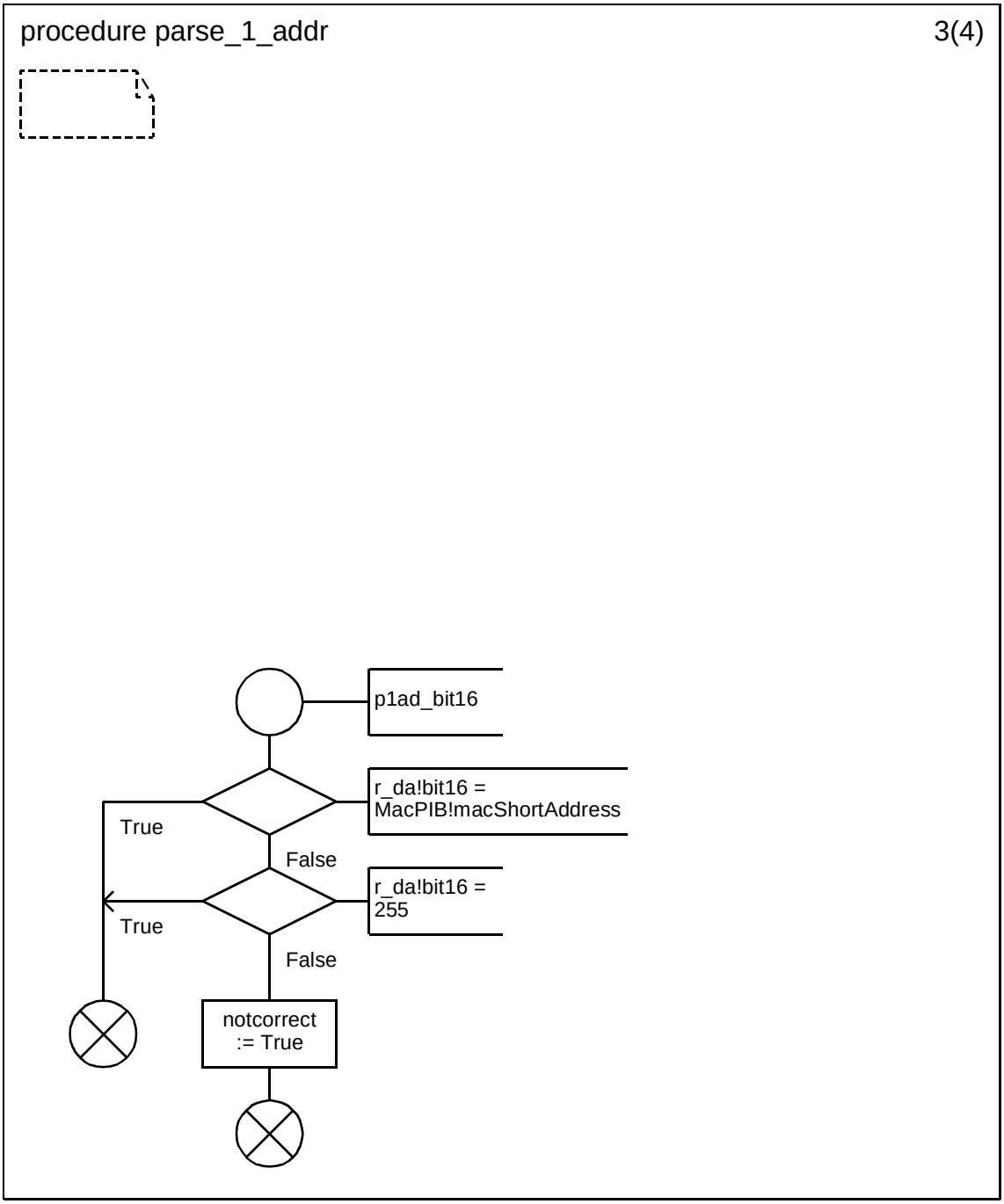


Copyright © 2003 IEEE. All rights reserved.

Authorized licensed use limited to: IEEE - Staff. Downloaded on October 28,2024 at 20:20:02 UTC from IEEE Xplore. Restrictions apply.

INTEL-1011
U.S. Patent 8,219,129

**D.3.1.154.82.4 Procedure parse_1_addr (4)**

.

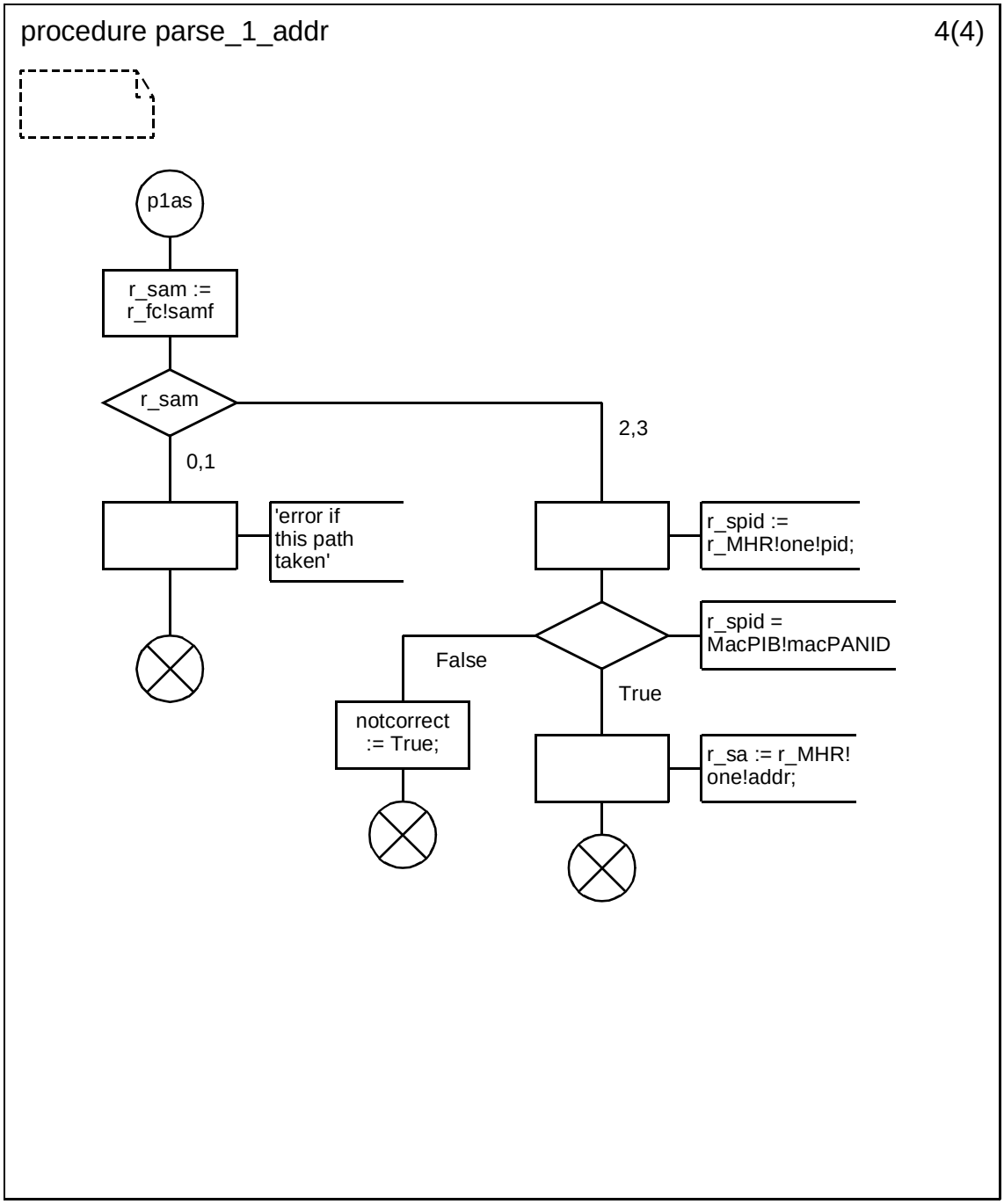



Copyright © 2003 IEEE. All rights reserved.
Authorized licensed use limited to: IEEE - Staff. Downloaded on October 28,2024 at 20:20:02 UTC from IEEE Xplore. Restrictions apply.

INTEL-1011
U.S. Patent 8,219,129

**D.3.1.154.82.5 Procedure parse_2_addr (1)**

.

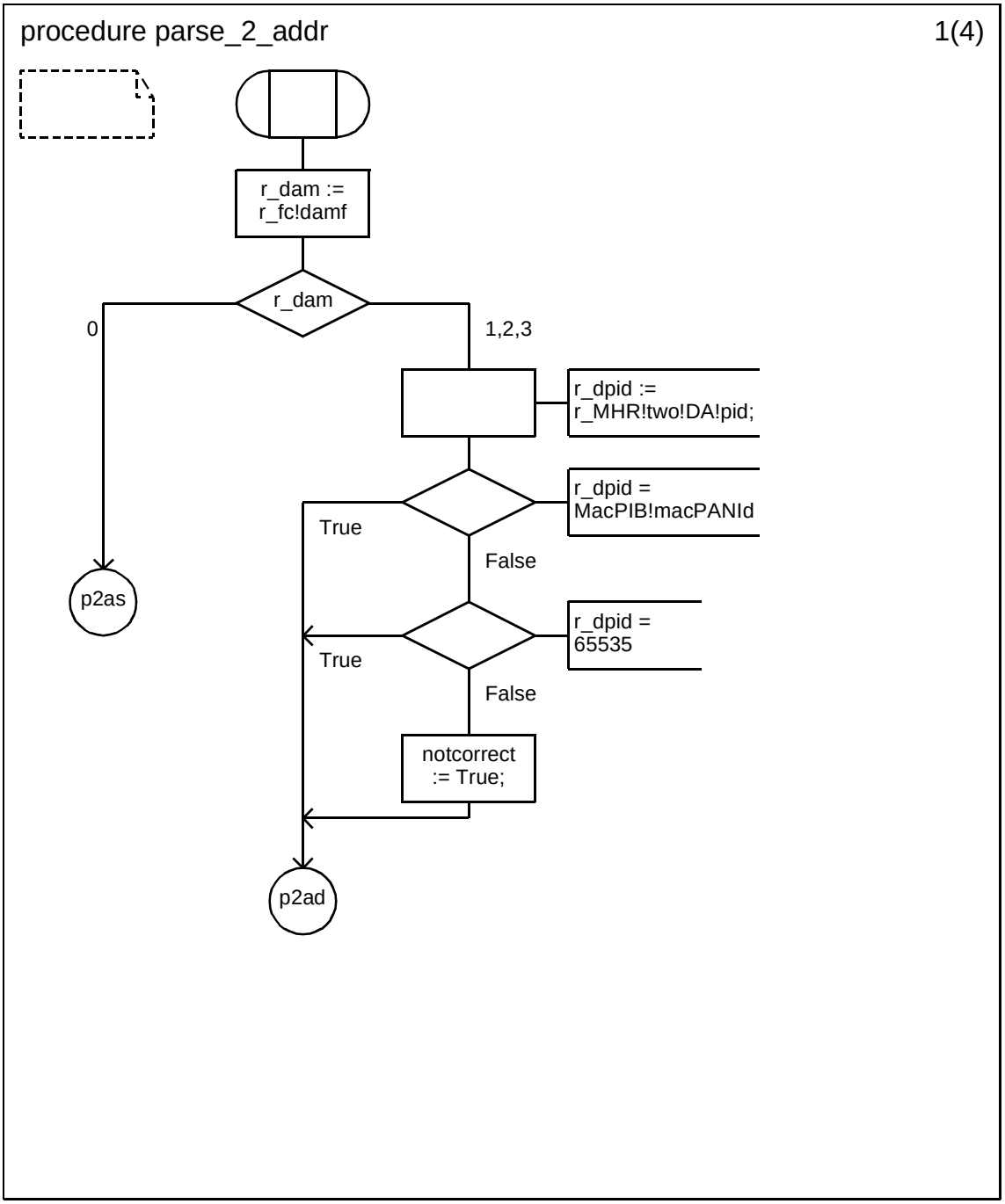


Copyright © 2003 IEEE. All rights reserved.

Authorized licensed use limited to: IEEE - Staff. Downloaded on October 28,2024 at 20:20:02 UTC from IEEE Xplore. Restrictions apply.

INTEL-1011
U.S. Patent 8,219,129

**D.3.1.154.82.6 Procedure parse_2_addr (2)**

.

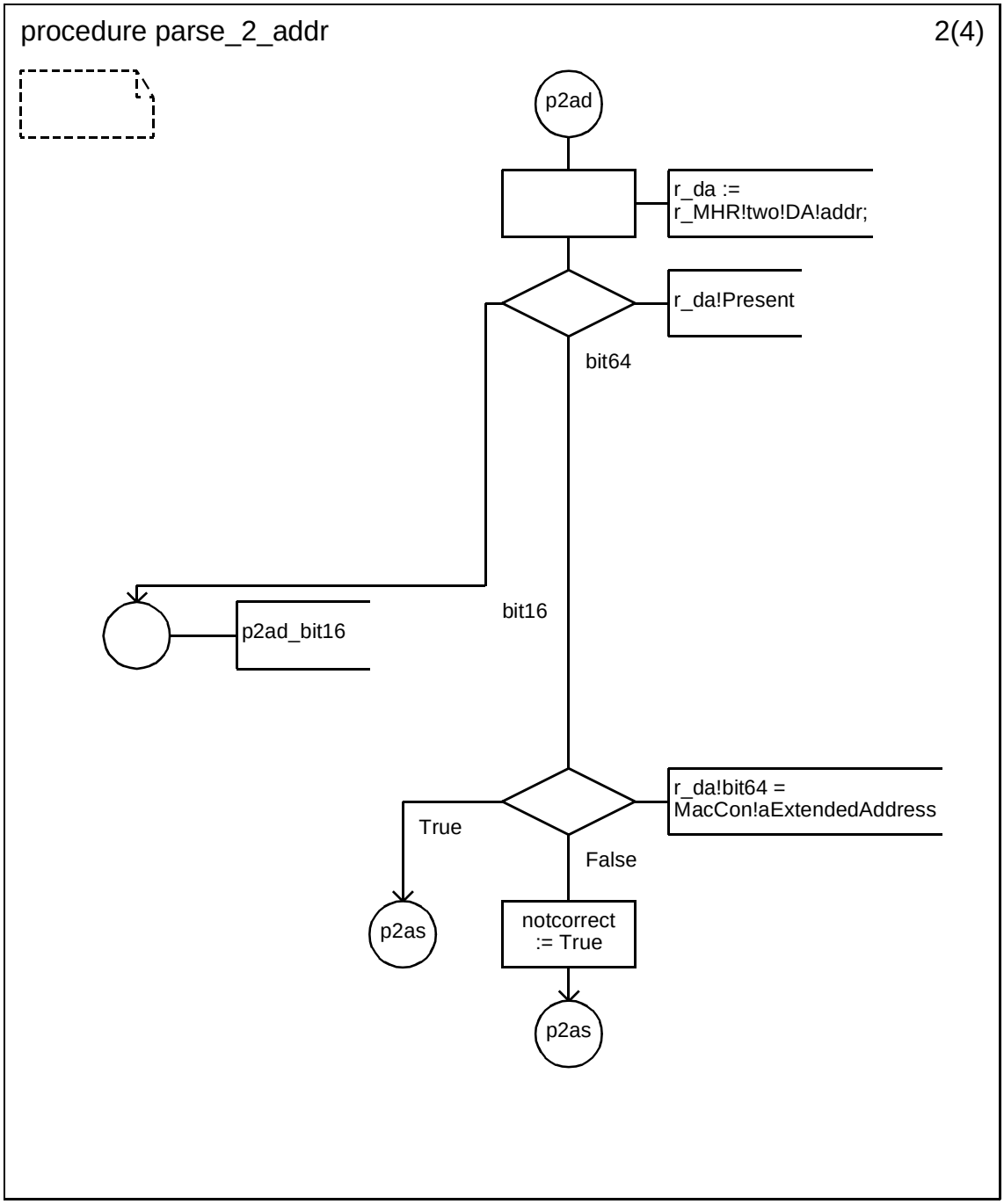



Copyright © 2003 IEEE. All rights reserved.
Authorized licensed use limited to: IEEE - Staff. Downloaded on October 28,2024 at 20:20:02 UTC from IEEE Xplore. Restrictions apply.

INTEL-1011
U.S. Patent 8,219,129

**D.3.1.154.82.7 Procedure parse_2_addr (3)**

.

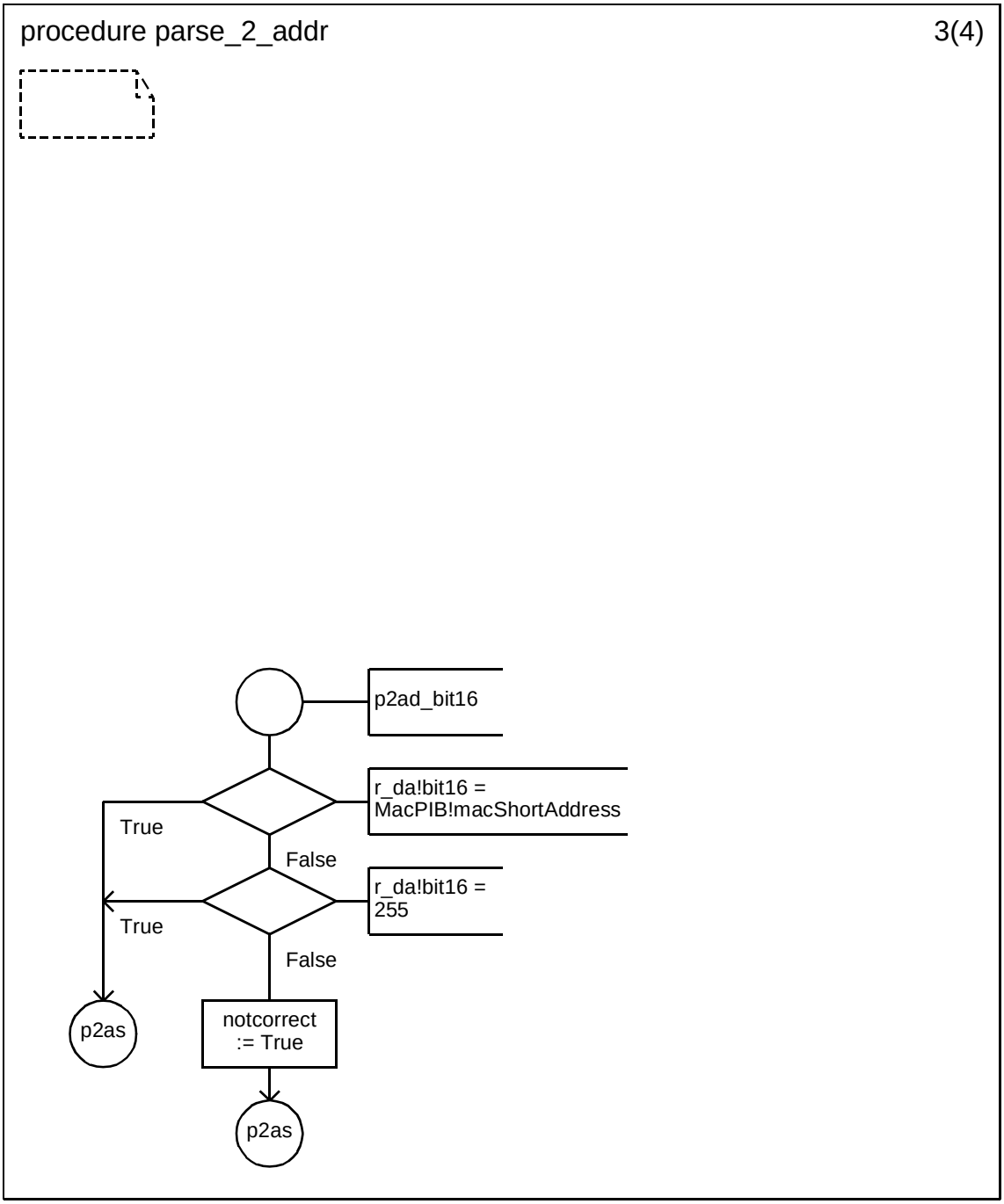


Copyright © 2003 IEEE. All rights reserved.

Authorized licensed use limited to: IEEE - Staff. Downloaded on October 28,2024 at 20:20:02 UTC from IEEE Xplore. Restrictions apply.

INTEL-1011
U.S. Patent 8,219,129

**D.3.1.154.82.8 Procedure parse_2_addr (4)**

.

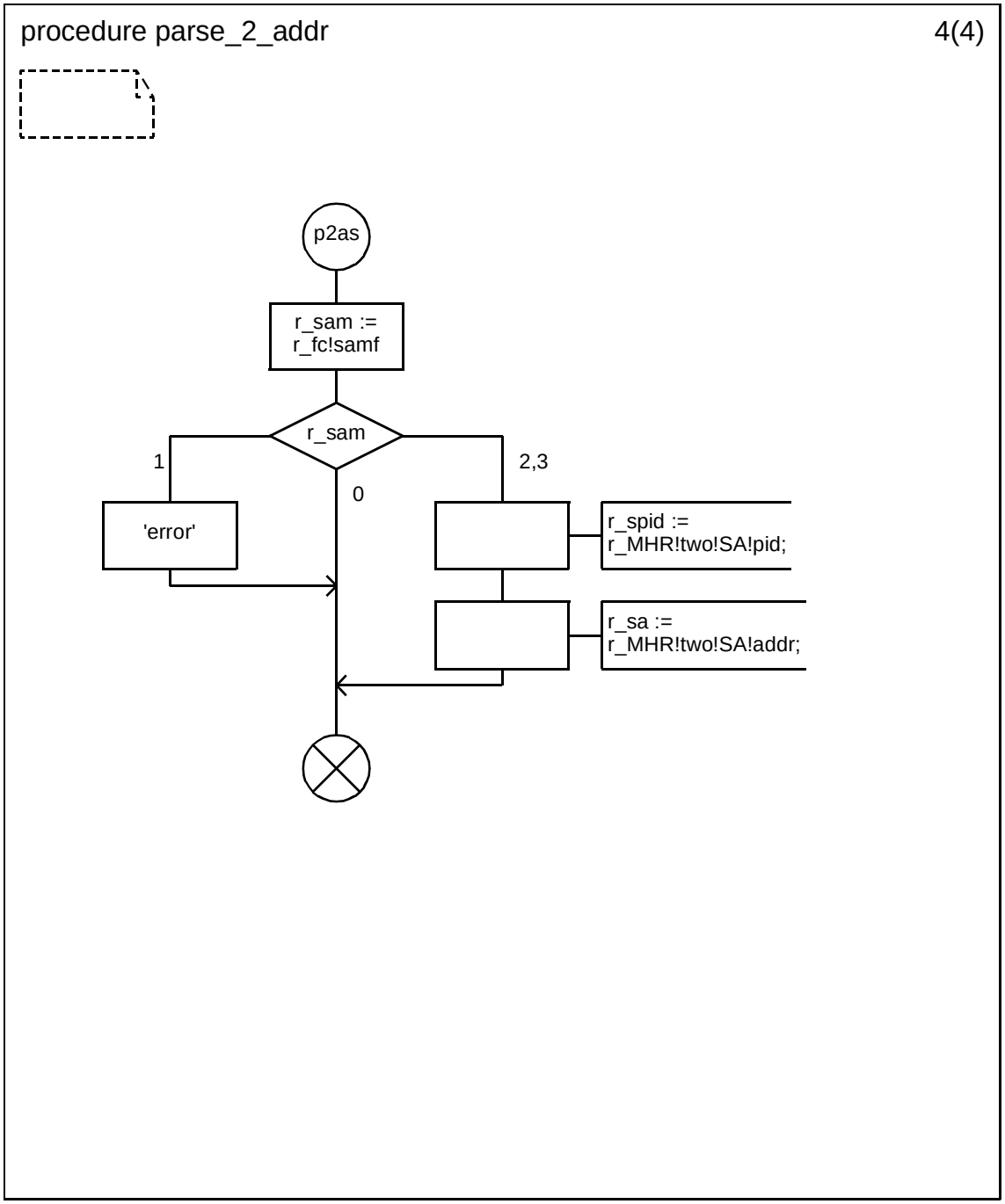



Copyright © 2003 IEEE. All rights reserved.
Authorized licensed use limited to: IEEE - Staff. Downloaded on October 28,2024 at 20:20:02 UTC from IEEE Xplore. Restrictions apply.

INTEL-1011
U.S. Patent 8,219,129

**D.3.1.154.82.9 Procedure parse_beacon (1)**

.

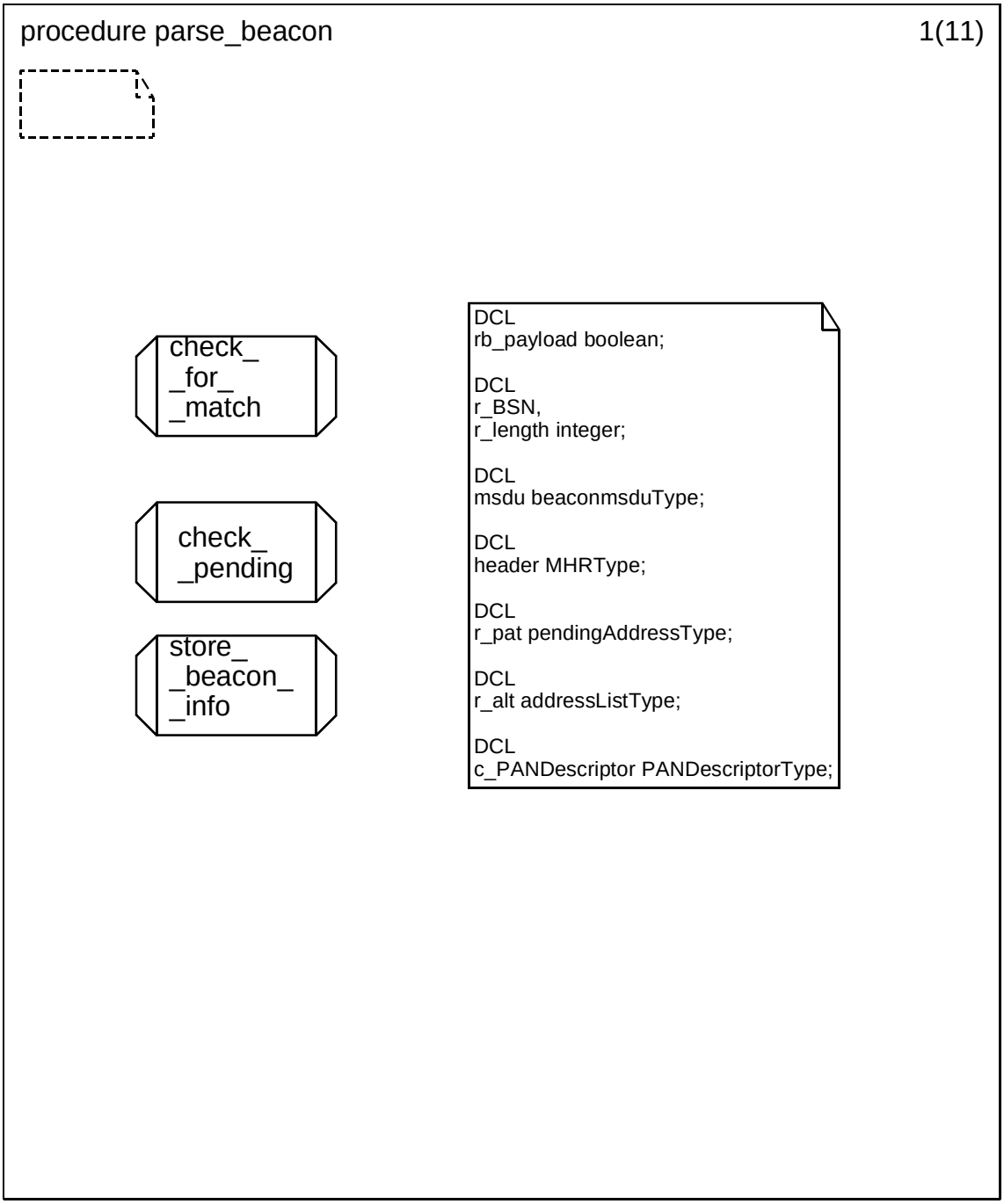


Copyright © 2003 IEEE. All rights reserved.

Authorized licensed use limited to: IEEE - Staff. Downloaded on October 28,2024 at 20:20:02 UTC from IEEE Xplore. Restrictions apply.

INTEL-1011
U.S. Patent 8,219,129

**D.3.1.154.82.10 Procedure parse_beacon (2)**

.

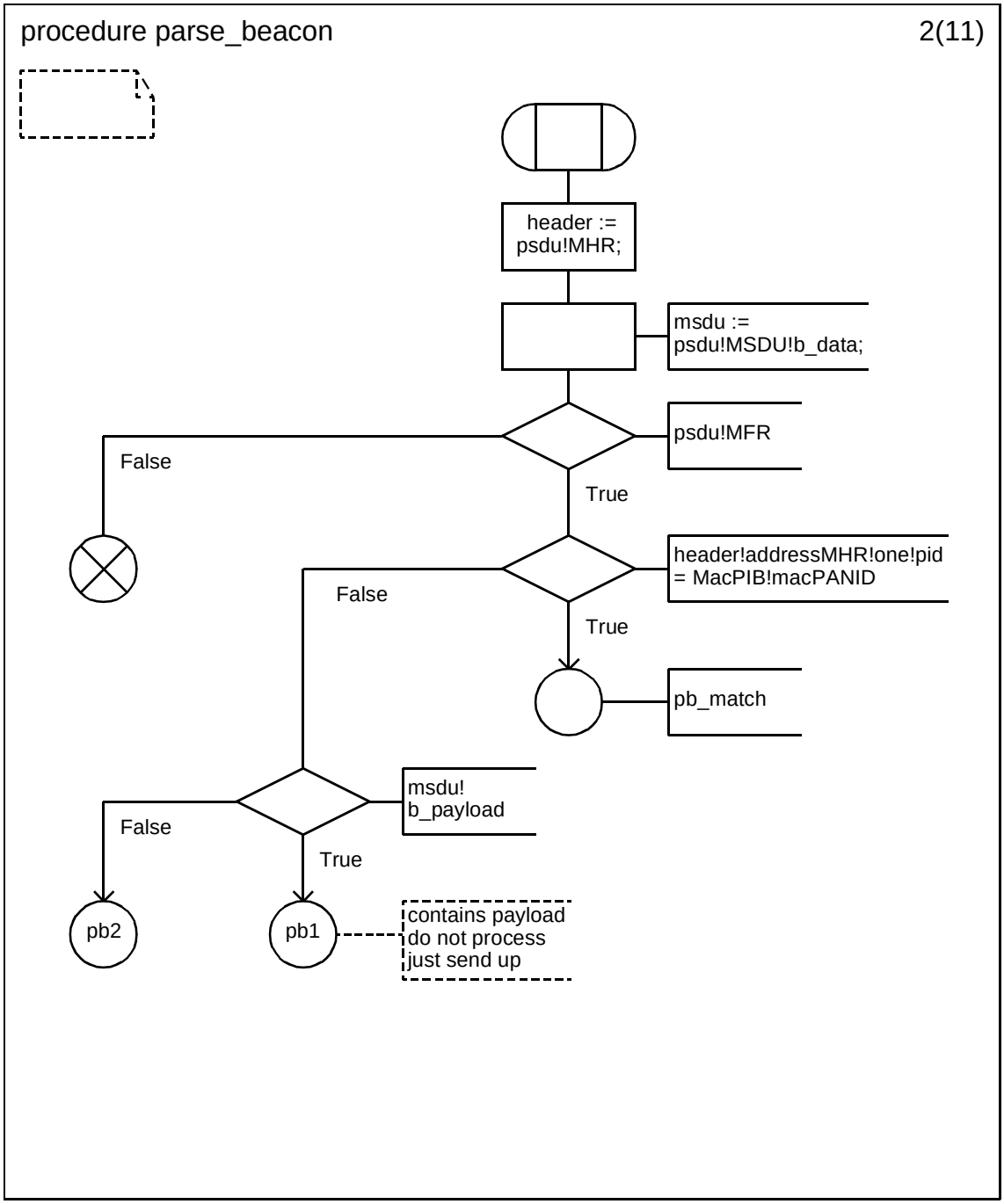



Copyright © 2003 IEEE. All rights reserved.
Authorized licensed use limited to: IEEE - Staff. Downloaded on October 28,2024 at 20:20:02 UTC from IEEE Xplore. Restrictions apply.

INTEL-1011
U.S. Patent 8,219,129

**D.3.1.154.82.11 Procedure parse_beacon (3)**

.

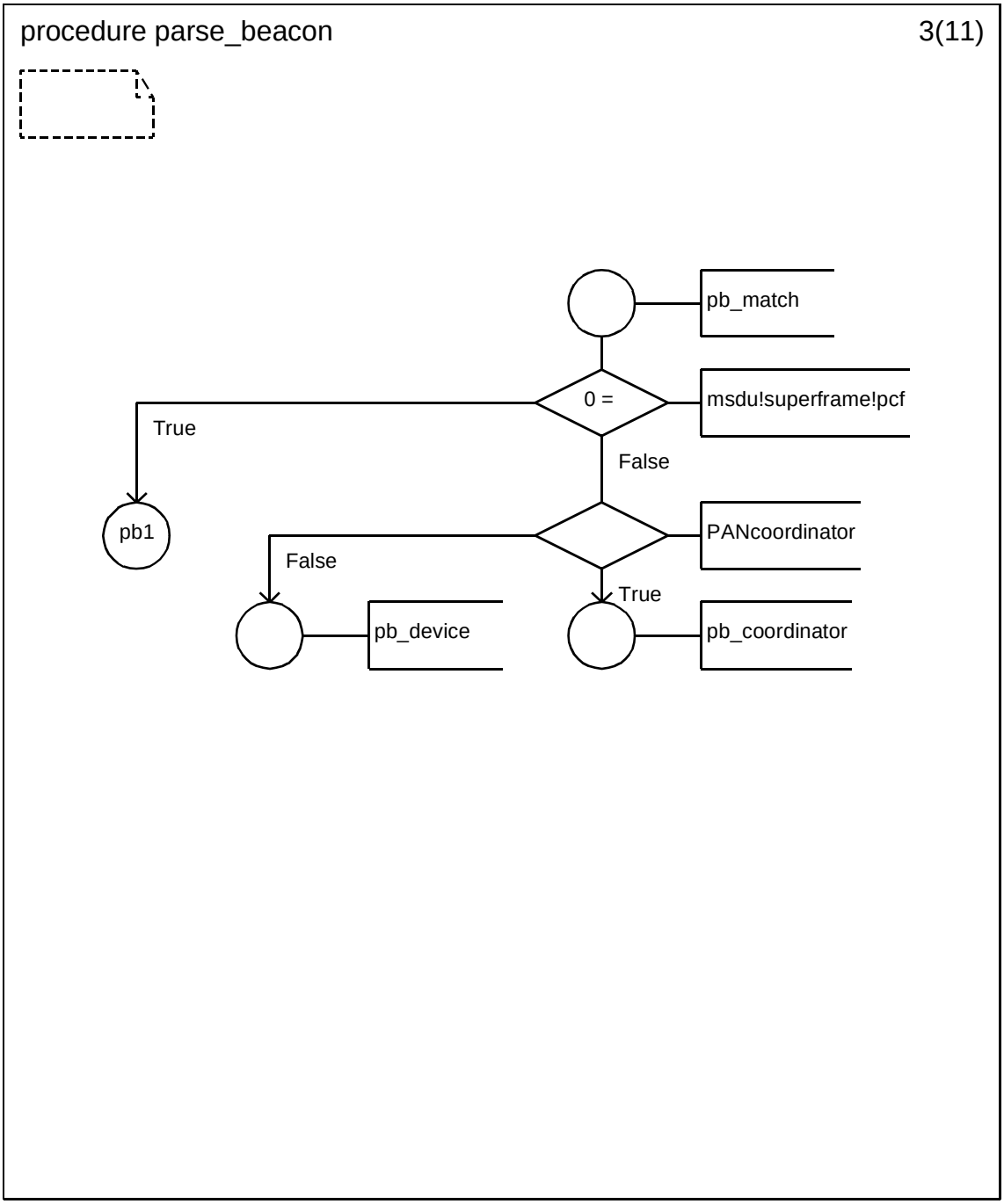


Copyright © 2003 IEEE. All rights reserved.

Authorized licensed use limited to: IEEE - Staff. Downloaded on October 28,2024 at 20:20:02 UTC from IEEE Xplore. Restrictions apply.

INTEL-1011
U.S. Patent 8,219,129

**D.3.1.154.82.12 Procedure parse_beacon (4)**

.

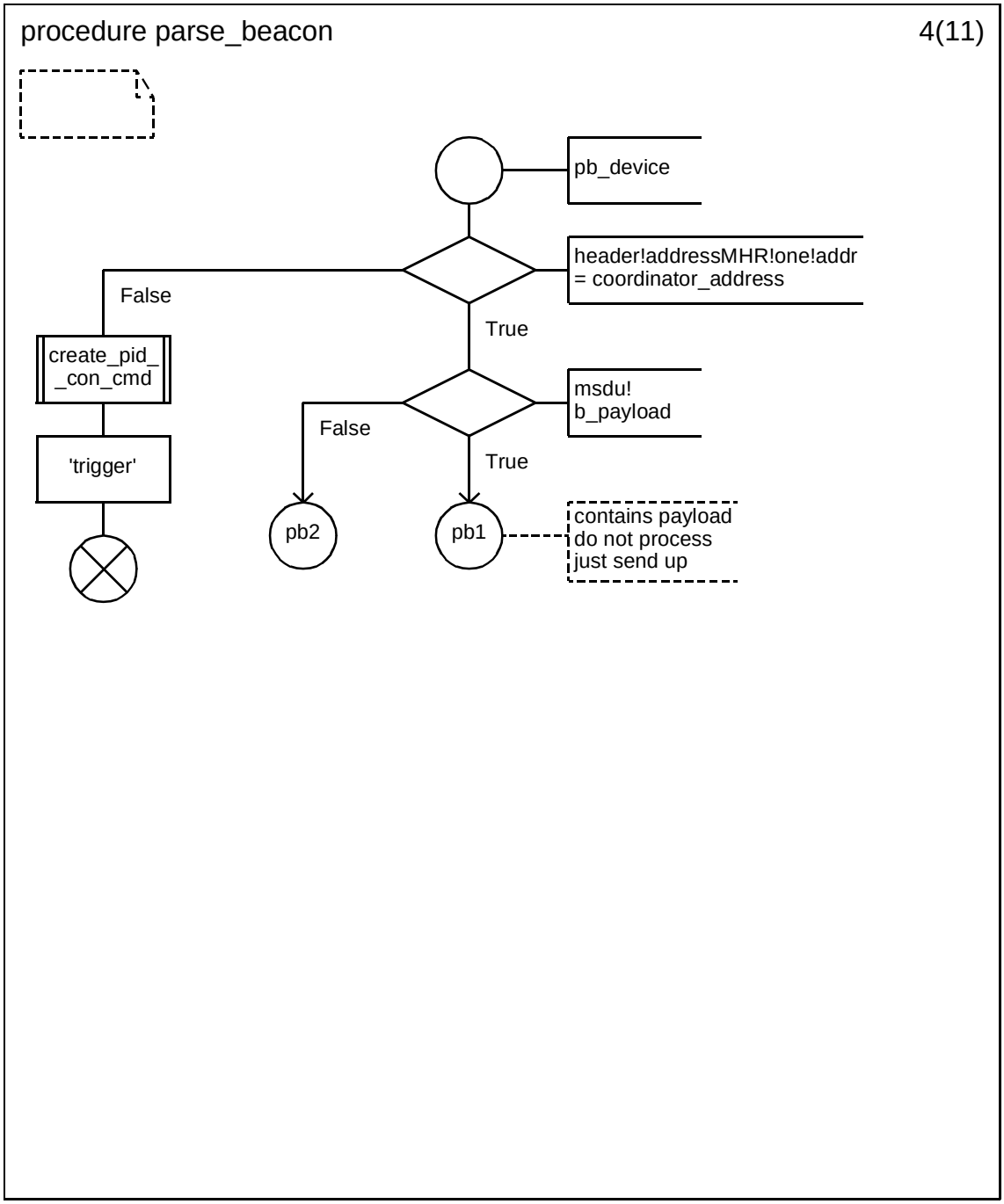



Copyright © 2003 IEEE. All rights reserved.
Authorized licensed use limited to: IEEE - Staff. Downloaded on October 28,2024 at 20:20:02 UTC from IEEE Xplore. Restrictions apply.

INTEL-1011
U.S. Patent 8,219,129

**D.3.1.154.82.13 Procedure parse_beacon (5)**

.

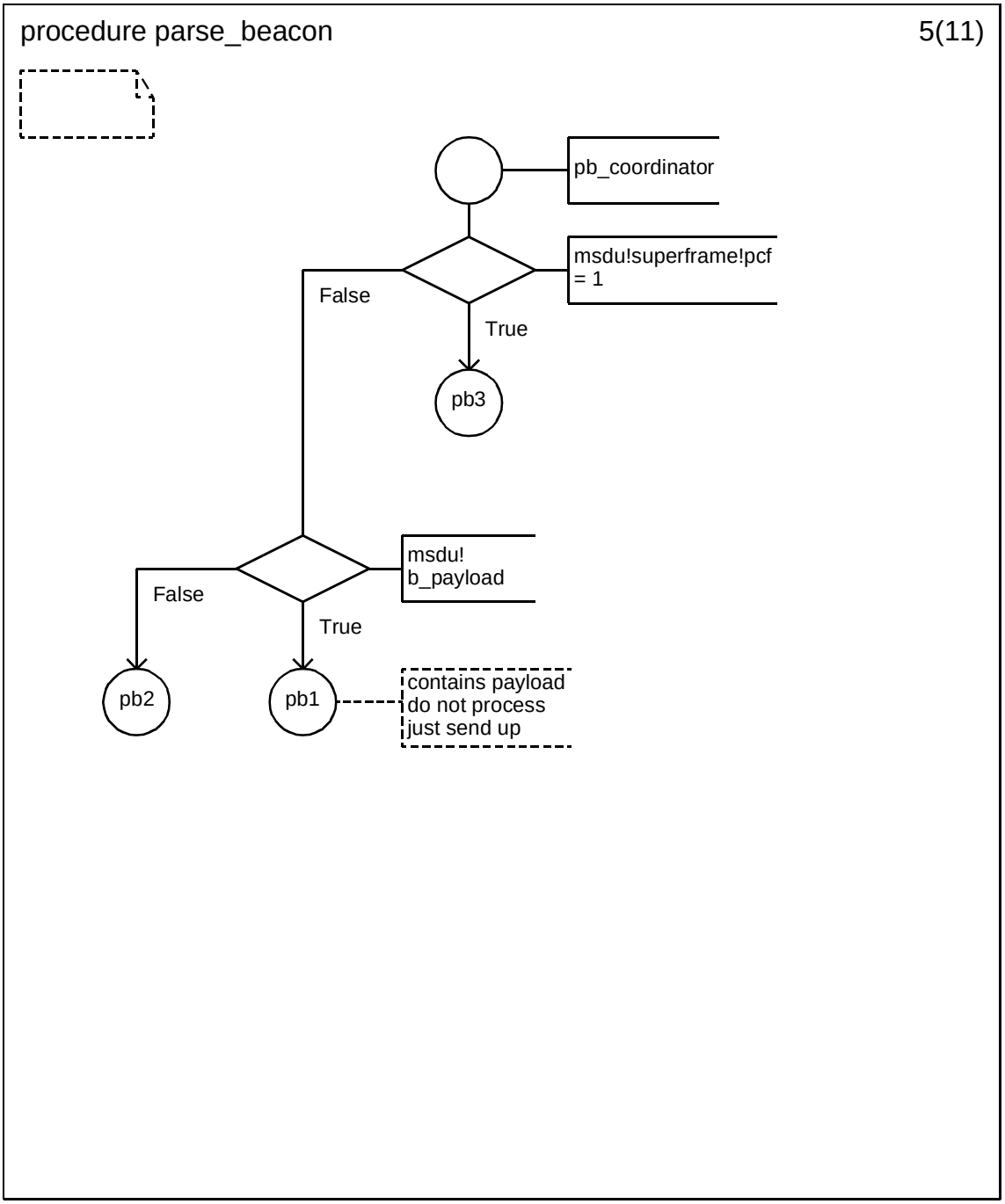


Copyright © 2003 IEEE. All rights reserved.

Authorized licensed use limited to: IEEE - Staff. Downloaded on October 28,2024 at 20:20:02 UTC from IEEE Xplore. Restrictions apply.

INTEL-1011
U.S. Patent 8,219,129

**D.3.1.154.82.14 Procedure parse_beacon (6)**

.

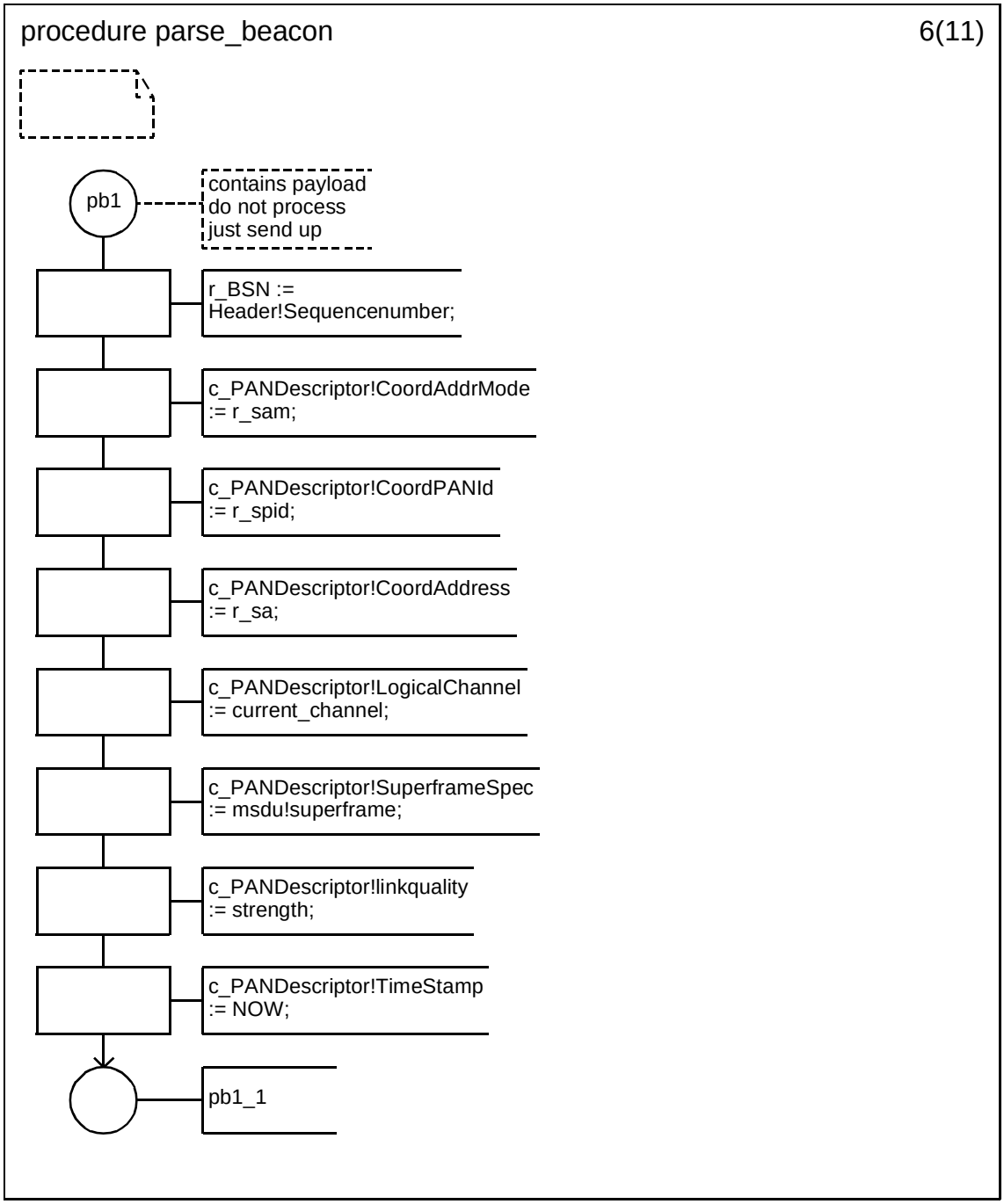



Copyright © 2003 IEEE. All rights reserved.
Authorized licensed use limited to: IEEE - Staff. Downloaded on October 28,2024 at 20:20:02 UTC from IEEE Xplore. Restrictions apply.

INTEL-1011
U.S. Patent 8,219,129

**D.3.1.154.82.15 Procedure parse_beacon (7)**

.

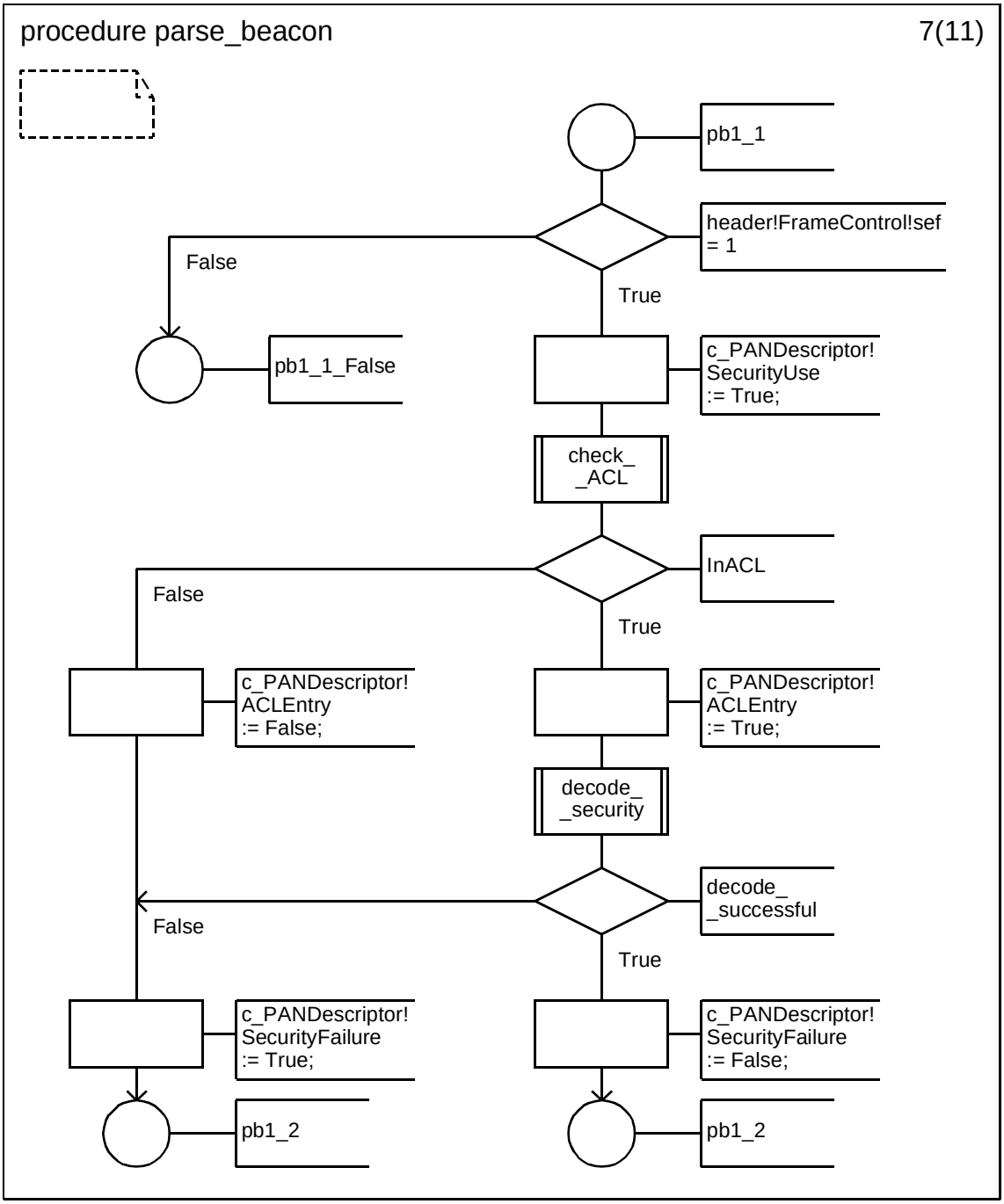


Copyright © 2003 IEEE. All rights reserved.

Authorized licensed use limited to: IEEE - Staff. Downloaded on October 28,2024 at 20:20:02 UTC from IEEE Xplore. Restrictions apply.

INTEL-1011
U.S. Patent 8,219,129

**D.3.1.154.82.16 Procedure parse_beacon (8)**

.

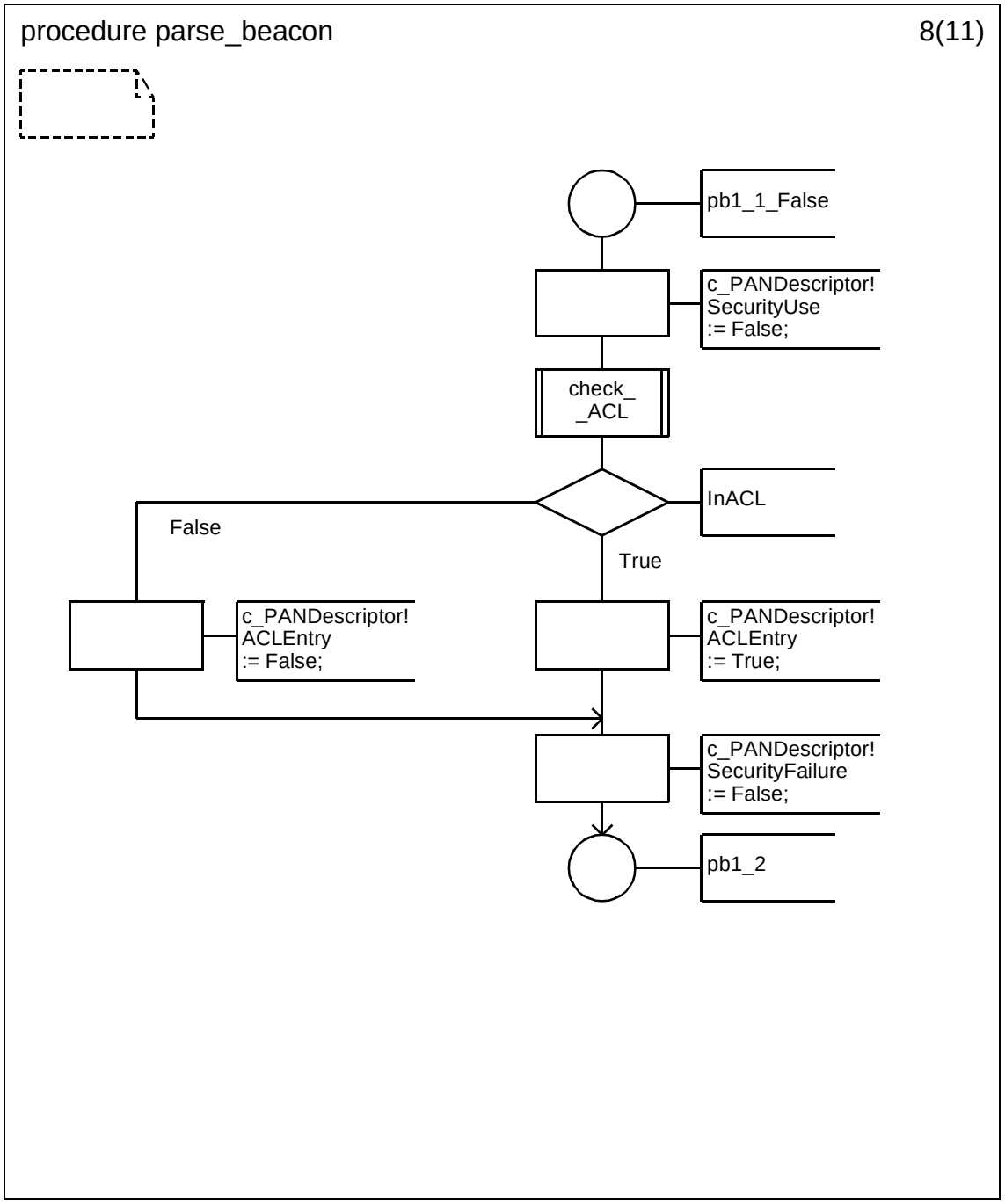



Copyright © 2003 IEEE. All rights reserved.
Authorized licensed use limited to: IEEE - Staff. Downloaded on October 28,2024 at 20:20:02 UTC from IEEE Xplore. Restrictions apply.

INTEL-1011
U.S. Patent 8,219,129

### D.3.1.154.82.17 Procedure parse_beacon (9)

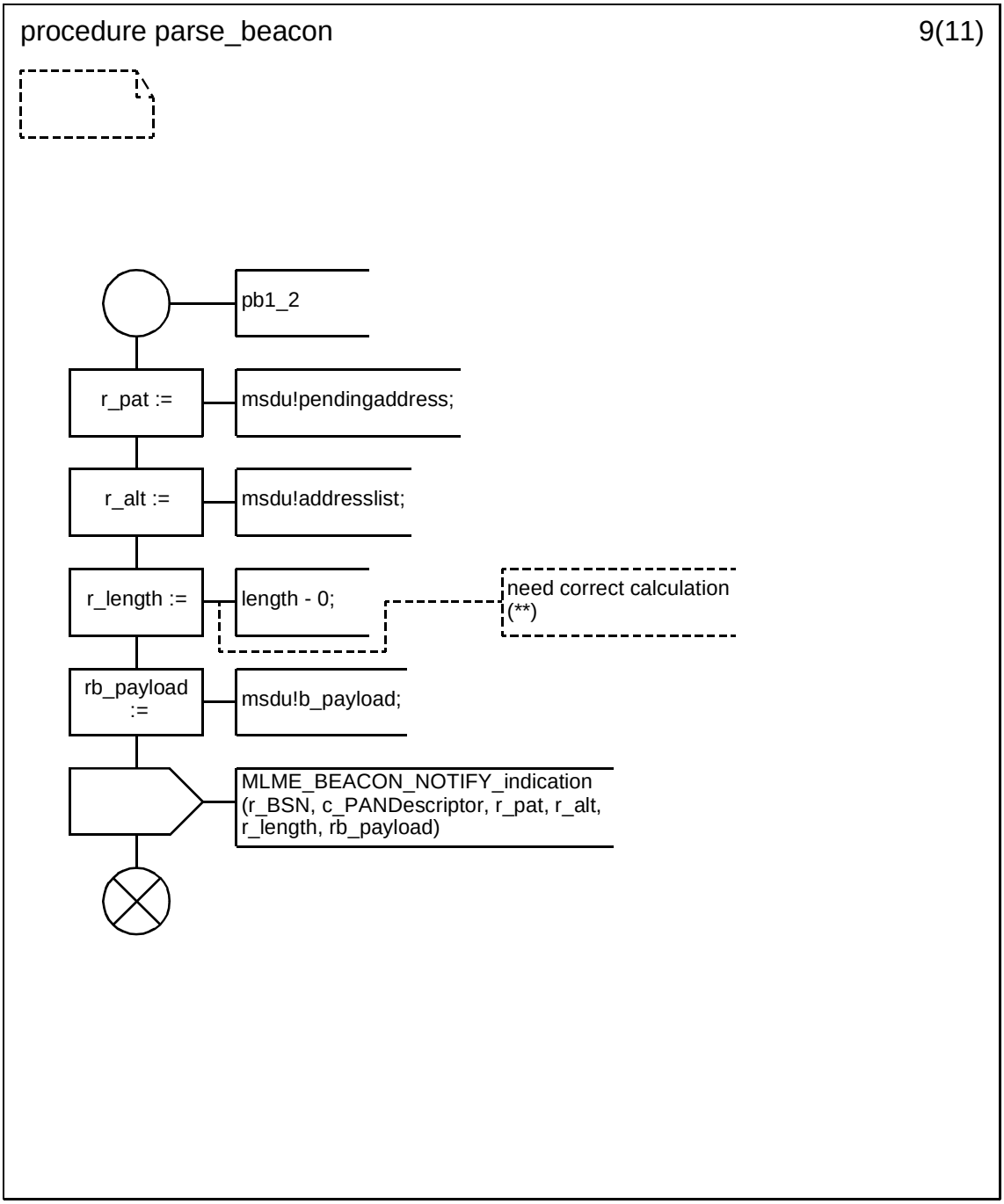


Copyright © 2003 IEEE. All rights reserved.

Authorized licensed use limited to: IEEE - Staff. Downloaded on October 28,2024 at 20:20:02 UTC from IEEE Xplore. Restrictions apply.

INTEL-1011
U.S. Patent 8,219,129

**D.3.1.154.82.18 Procedure parse_beacon (10)**

.

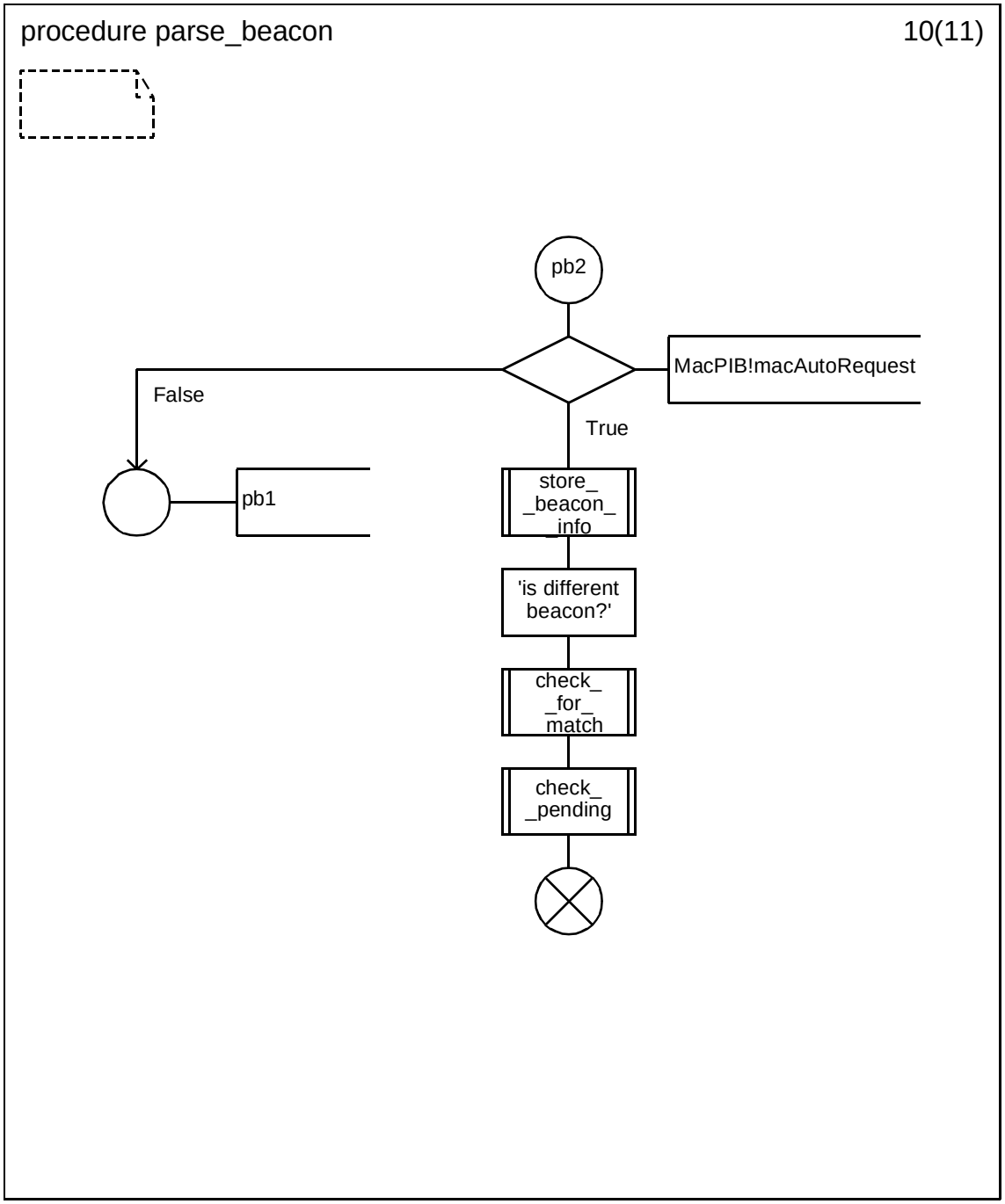



Copyright © 2003 IEEE. All rights reserved.
Authorized licensed use limited to: IEEE - Staff. Downloaded on October 28,2024 at 20:20:02 UTC from IEEE Xplore. Restrictions apply.

INTEL-1011
U.S. Patent 8,219,129

**D.3.1.154.82.19 Procedure parse_beacon (11)**

.

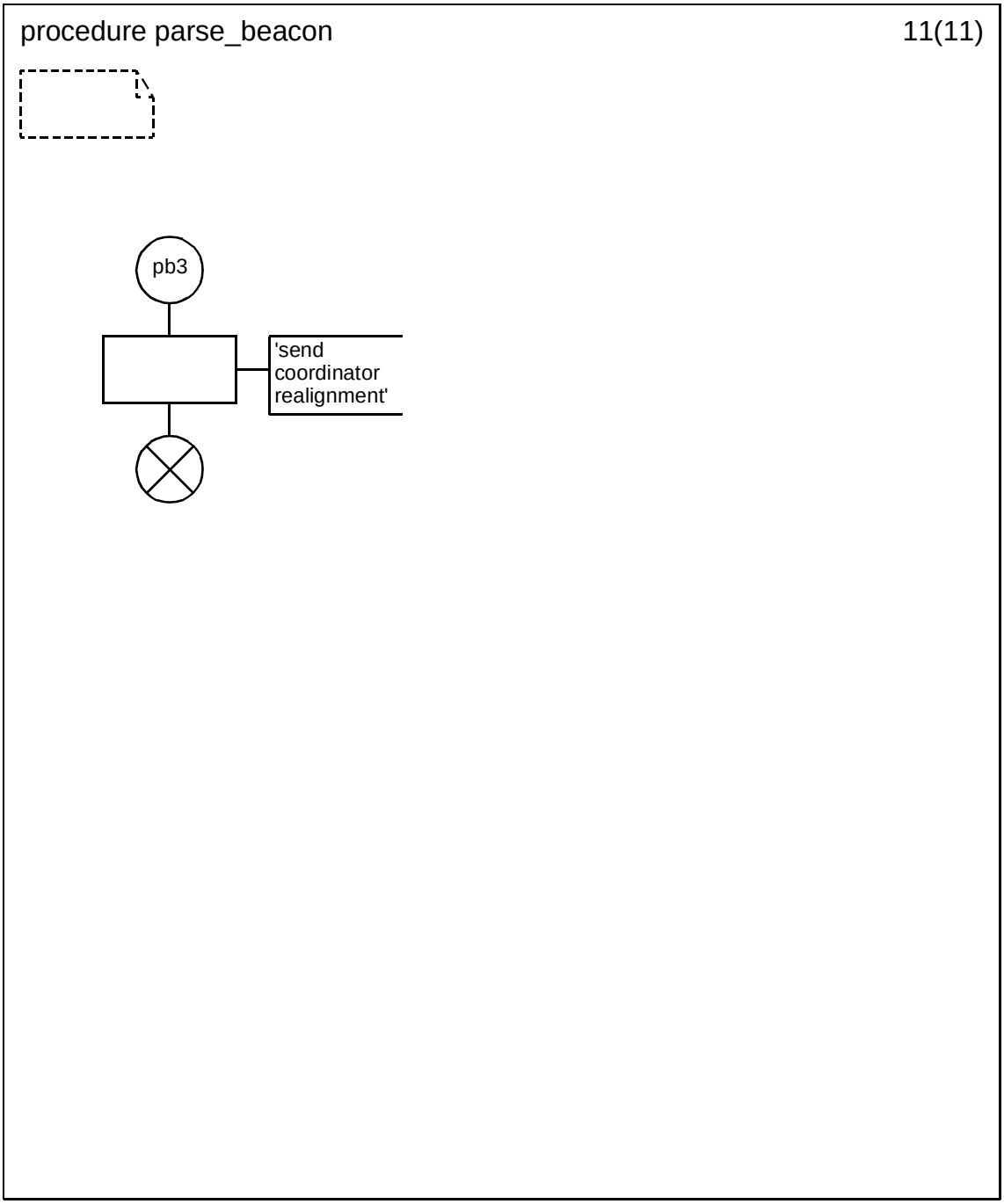


Copyright © 2003 IEEE. All rights reserved.

Authorized licensed use limited to: IEEE - Staff. Downloaded on October 28,2024 at 20:20:02 UTC from IEEE Xplore. Restrictions apply.

INTEL-1011
U.S. Patent 8,219,129

**D.3.1.154.82.20 Procedure store_beacon_info (1)**

.

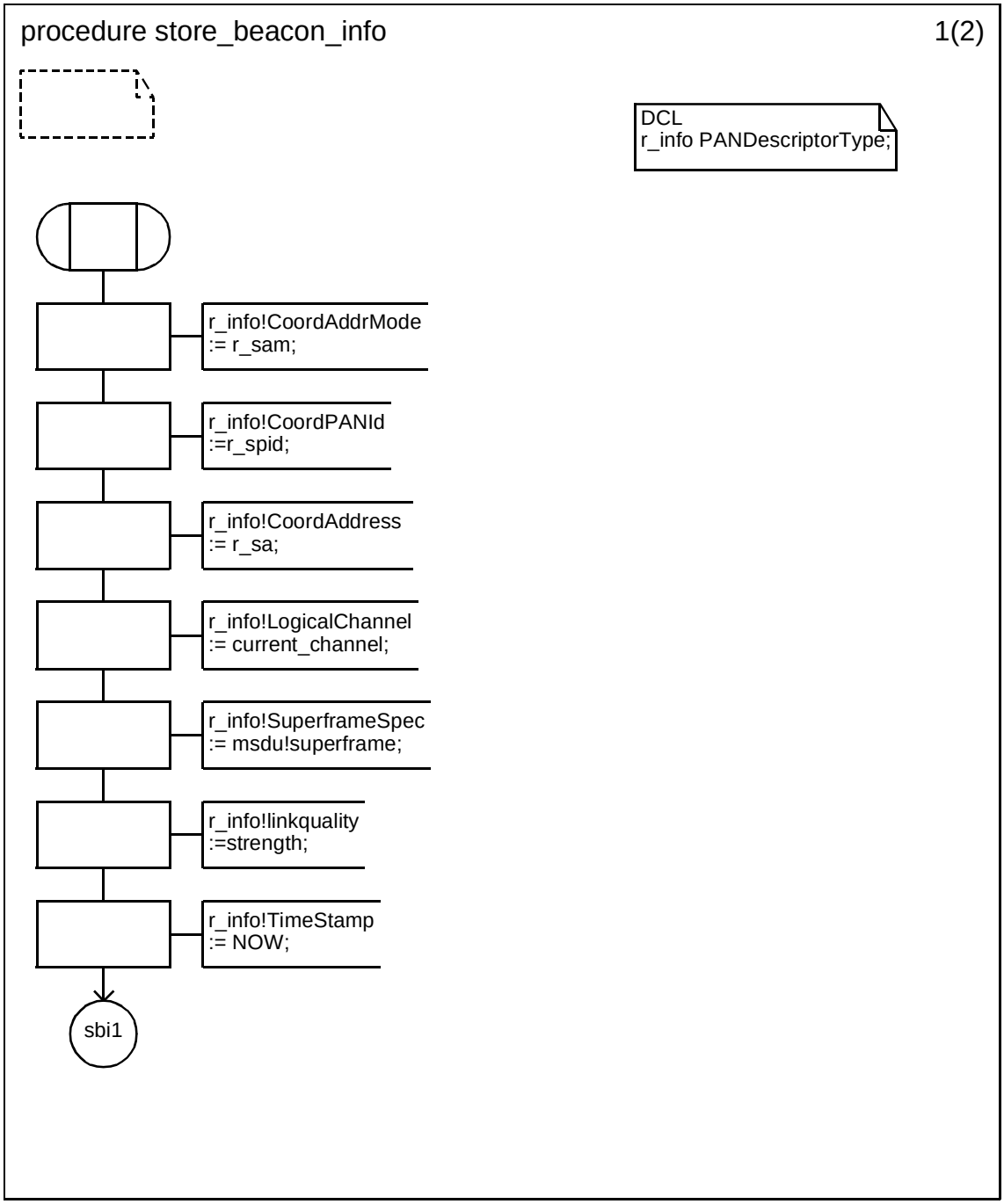



Copyright © 2003 IEEE. All rights reserved.
Authorized licensed use limited to: IEEE - Staff. Downloaded on October 28,2024 at 20:20:02 UTC from IEEE Xplore. Restrictions apply.

INTEL-1011
U.S. Patent 8,219,129

### D.3.1.154.82.21 Procedure store_beacon_info (2)

.

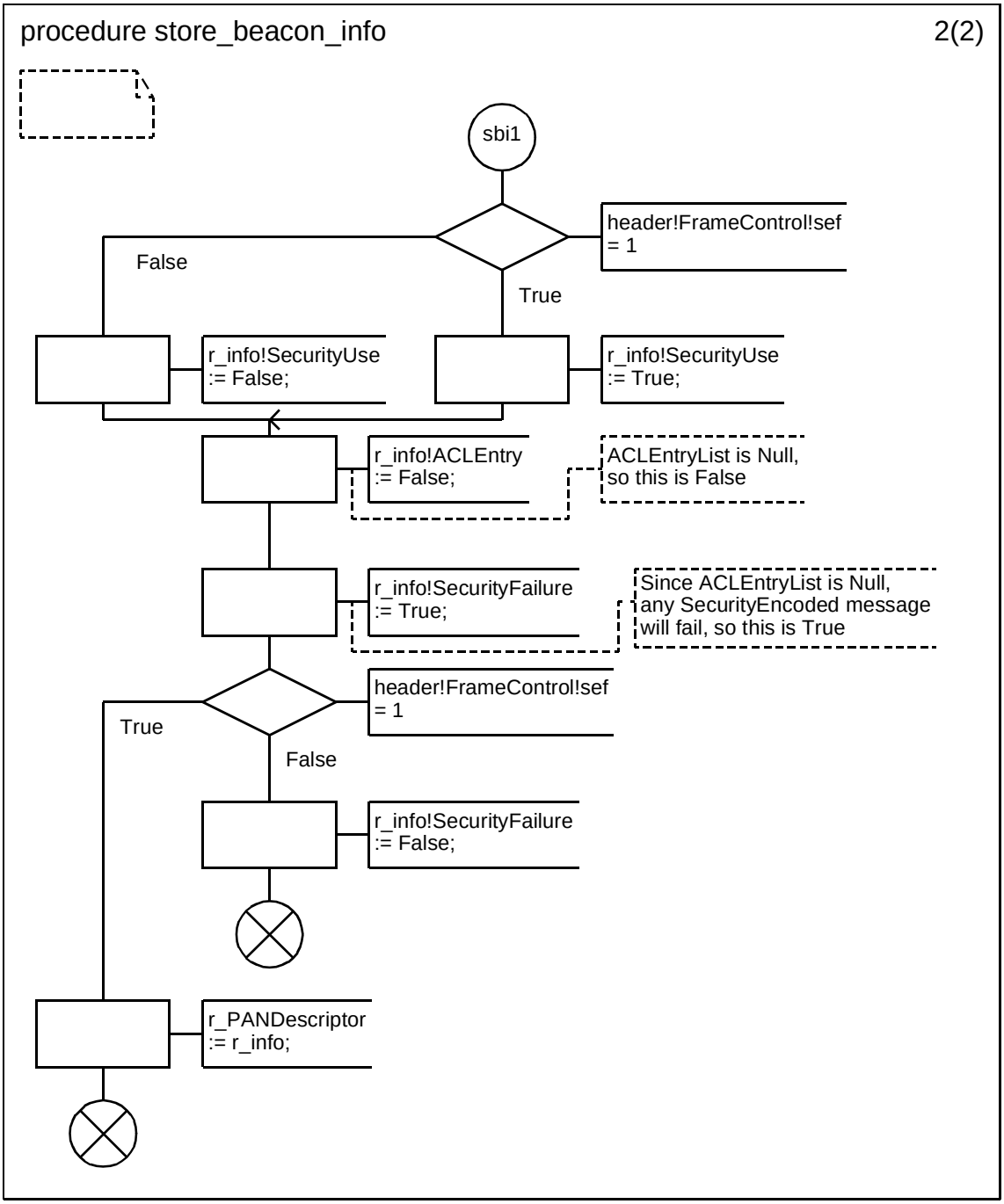


Copyright © 2003 IEEE. All rights reserved.

Authorized licensed use limited to: IEEE - Staff. Downloaded on October 28,2024 at 20:20:02 UTC from IEEE Xplore. Restrictions apply.

INTEL-1011
U.S. Patent 8,219,129

**D.3.1.154.82.22 Procedure check_pending (1)**

.

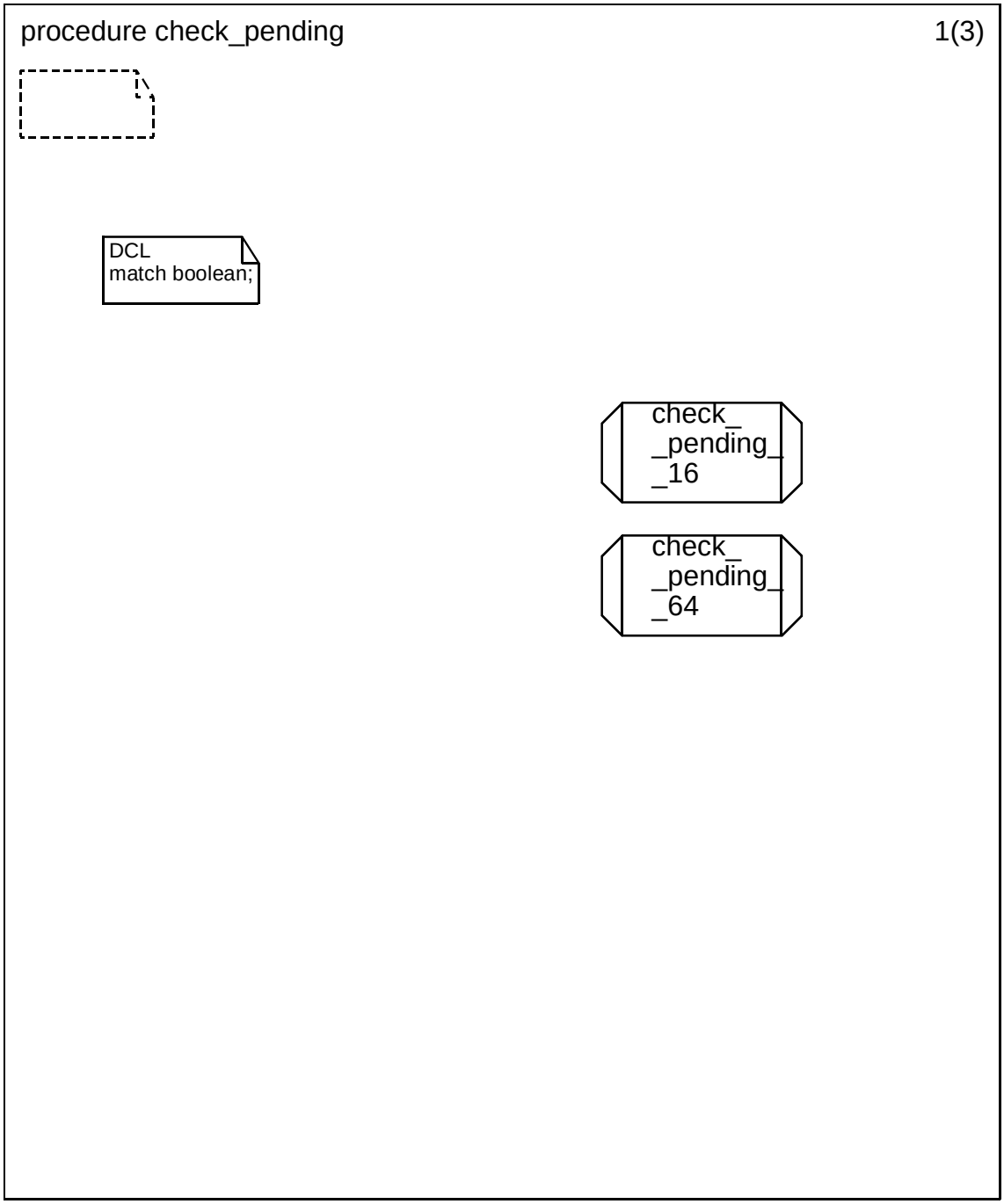



Copyright © 2003 IEEE. All rights reserved.
Authorized licensed use limited to: IEEE - Staff. Downloaded on October 28,2024 at 20:20:02 UTC from IEEE Xplore. Restrictions apply.

INTEL-1011
U.S. Patent 8,219,129

**D.3.1.154.82.23 Procedure check_pending (2)**

.

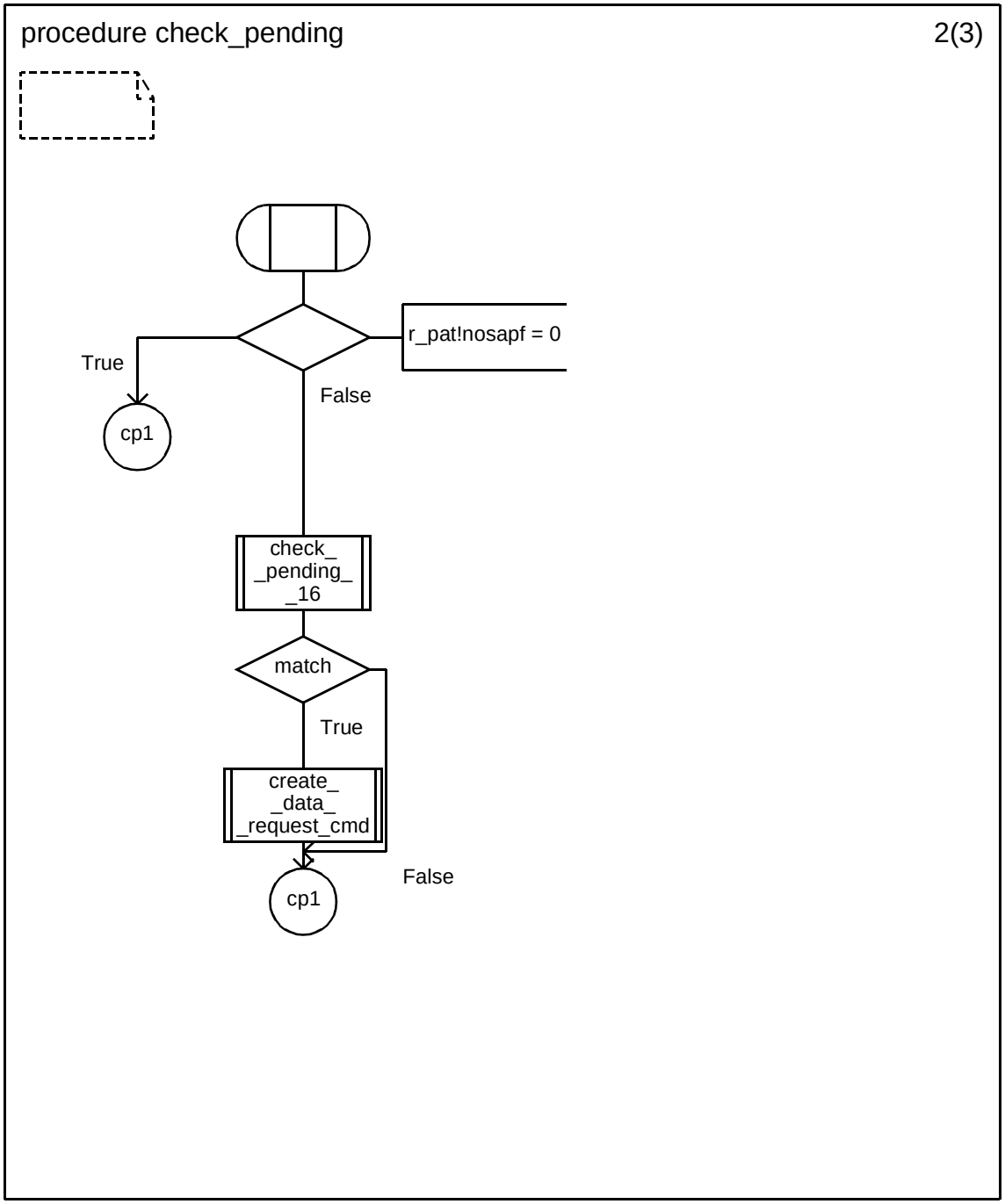


Copyright © 2003 IEEE. All rights reserved.

Authorized licensed use limited to: IEEE - Staff. Downloaded on October 28,2024 at 20:20:02 UTC from IEEE Xplore. Restrictions apply.

INTEL-1011
U.S. Patent 8,219,129

**D.3.1.154.82.24 Procedure check_pending (3)**

.

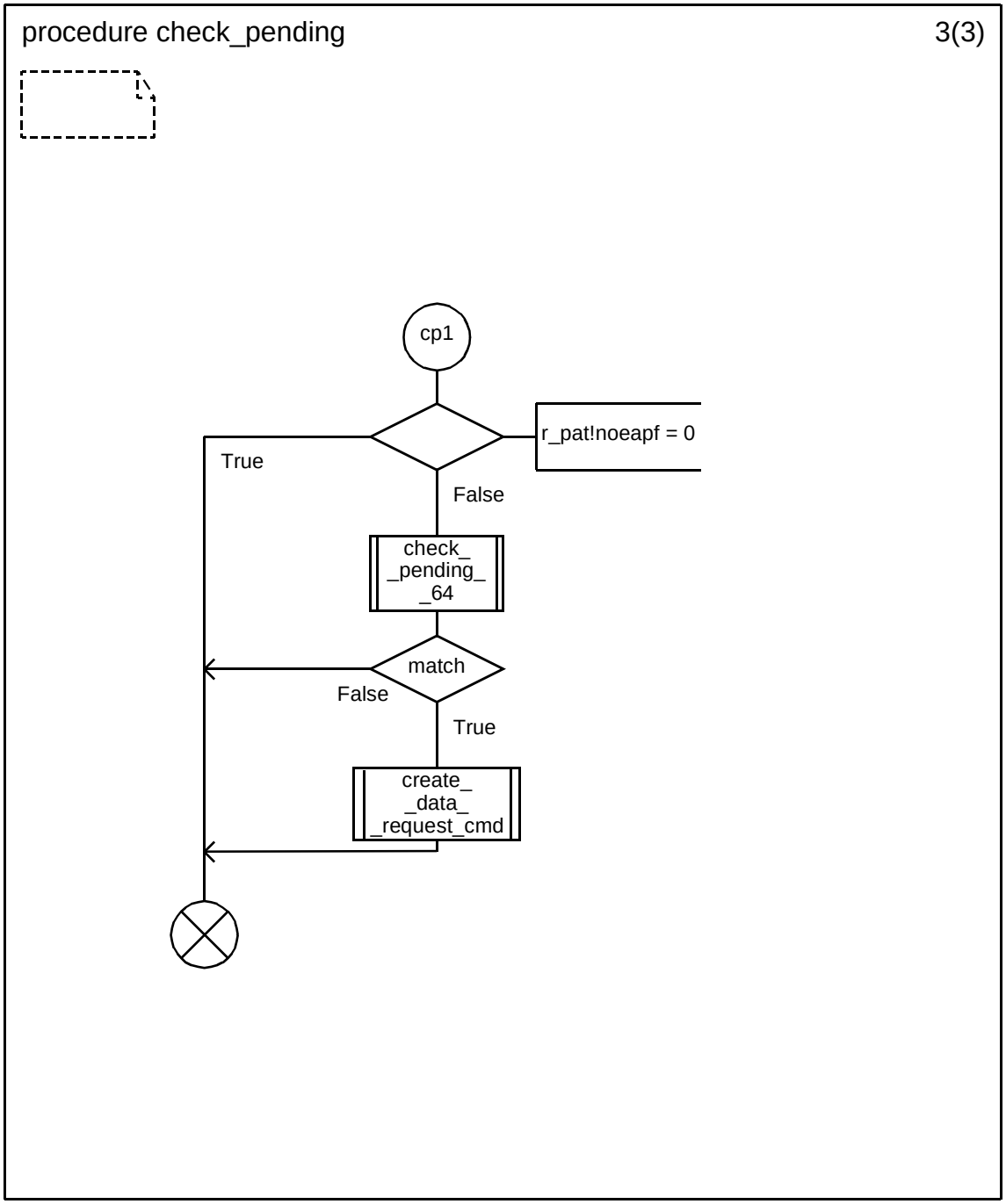



Copyright © 2003 IEEE. All rights reserved.
Authorized licensed use limited to: IEEE - Staff. Downloaded on October 28,2024 at 20:20:02 UTC from IEEE Xplore. Restrictions apply.

INTEL-1011
U.S. Patent 8,219,129

### D.3.1.154.82.25 Procedure check_pending_16

.

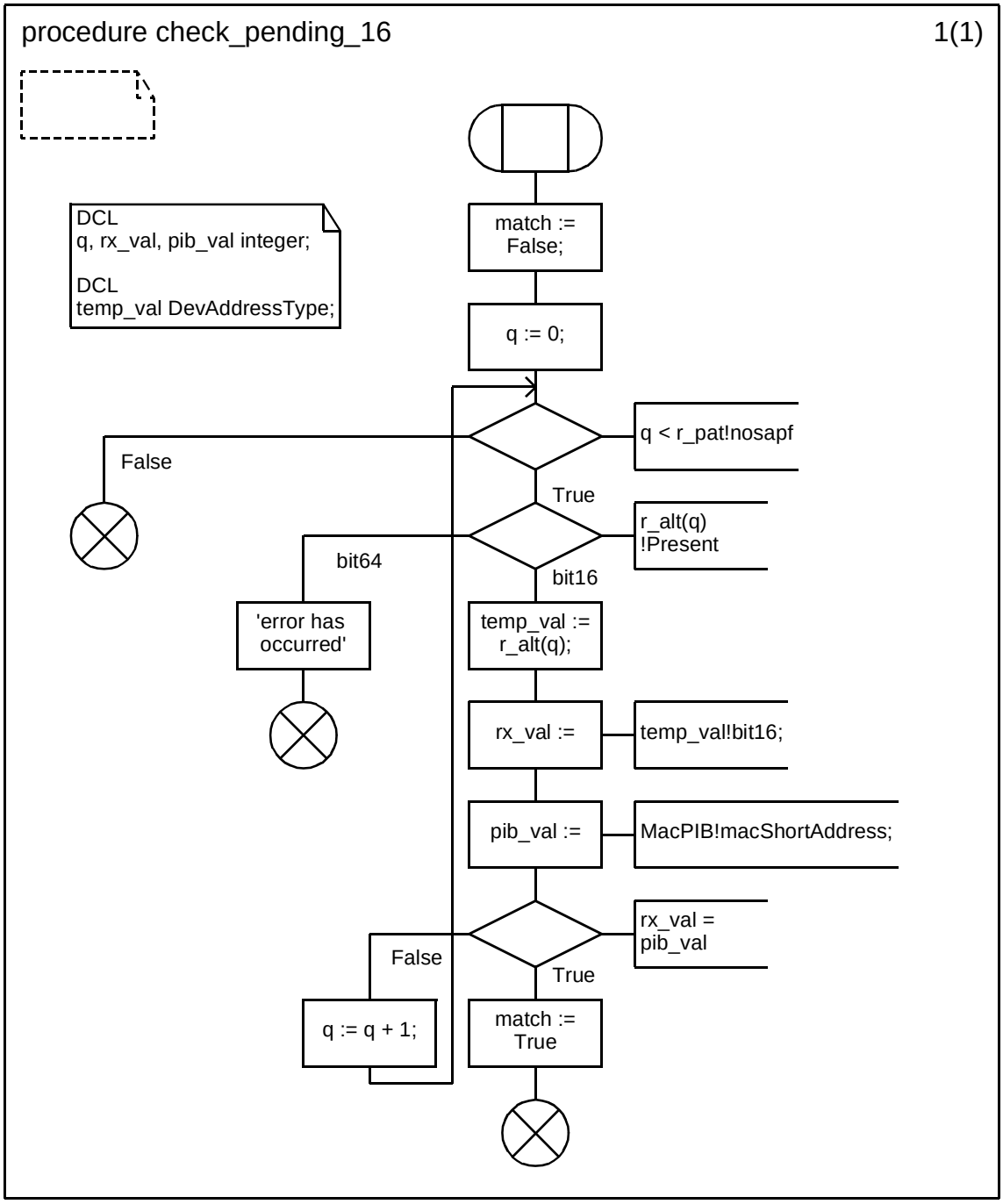


Copyright © 2003 IEEE. All rights reserved.

Authorized licensed use limited to: IEEE - Staff. Downloaded on October 28,2024 at 20:20:02 UTC from IEEE Xplore. Restrictions apply.

INTEL-1011
U.S. Patent 8,219,129

### D.3.1.154.82.26 Procedure check_pending_64

.

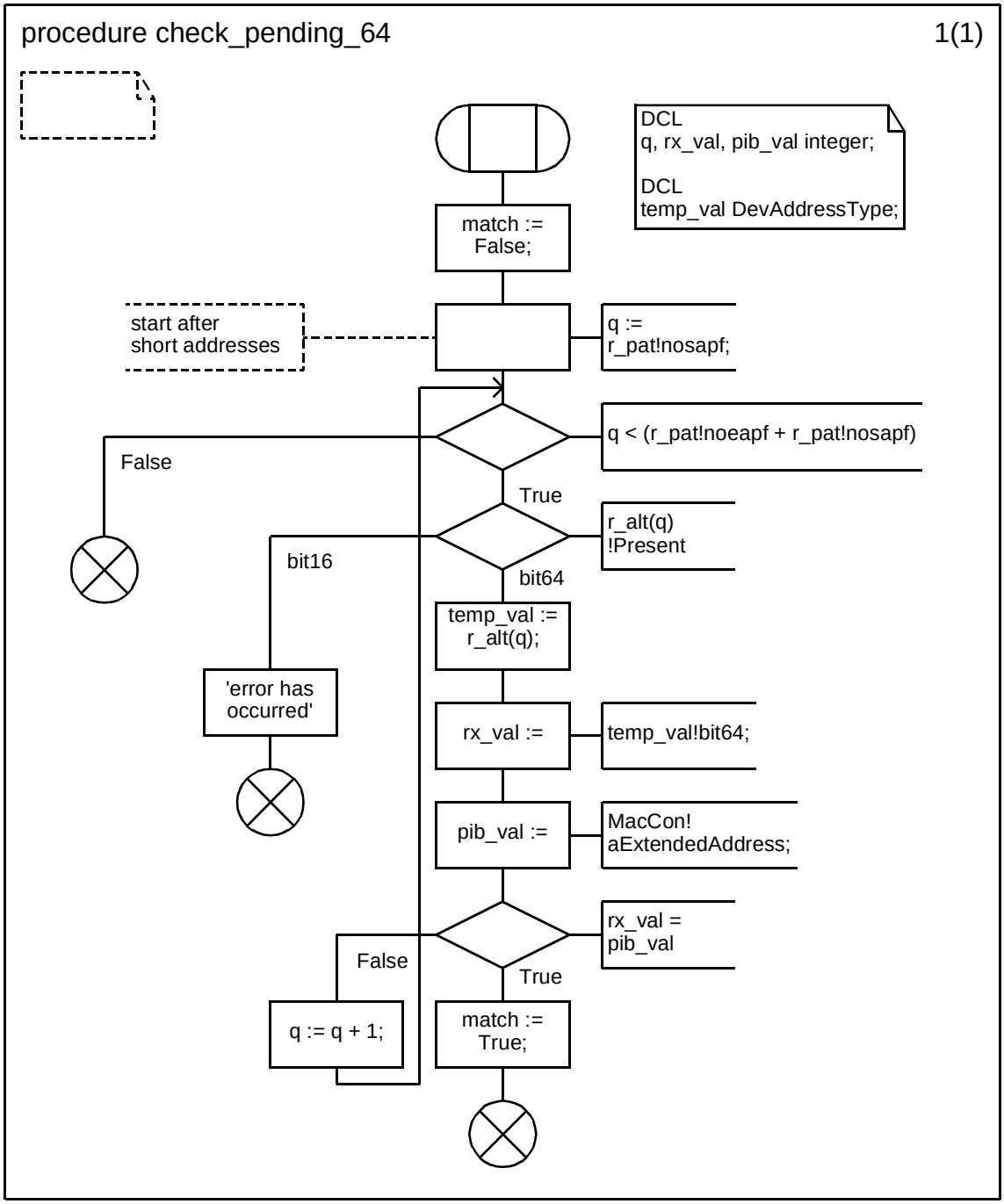



Copyright © 2003 IEEE. All rights reserved.
Authorized licensed use limited to: IEEE - Staff. Downloaded on October 28,2024 at 20:20:02 UTC from IEEE Xplore. Restrictions apply.

INTEL-1011
U.S. Patent 8,219,129

### D.3.1.154.82.27 Procedure check_for_match (1)

.

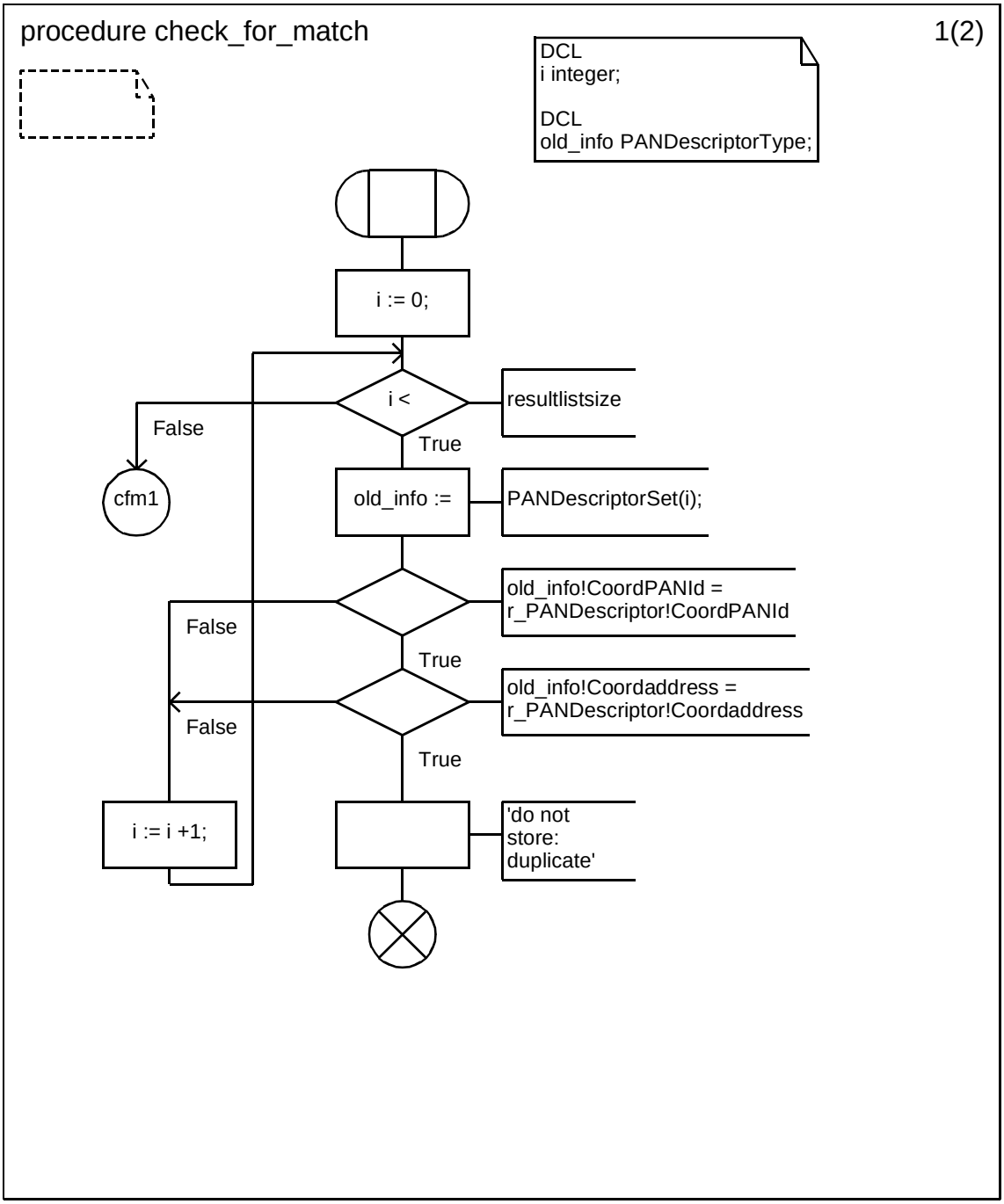


Copyright © 2003 IEEE. All rights reserved.

Authorized licensed use limited to: IEEE - Staff. Downloaded on October 28,2024 at 20:20:02 UTC from IEEE Xplore. Restrictions apply.

INTEL-1011
U.S. Patent 8,219,129

**D.3.1.154.82.28 Procedure check_for_match (2)**

.

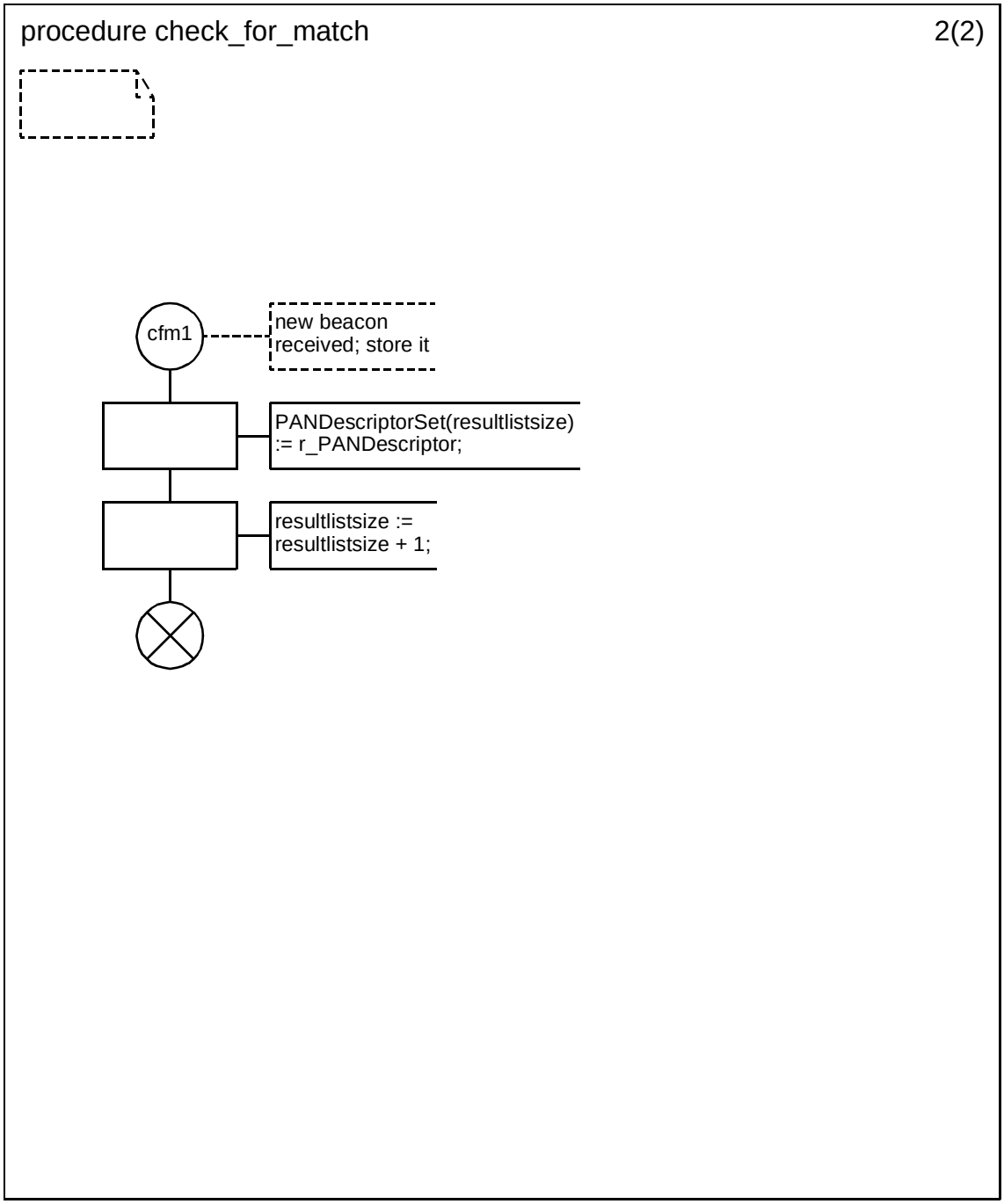



Copyright © 2003 IEEE. All rights reserved.
Authorized licensed use limited to: IEEE - Staff. Downloaded on October 28,2024 at 20:20:02 UTC from IEEE Xplore. Restrictions apply.

INTEL-1011
U.S. Patent 8,219,129

**D.3.1.154.82.29 Procedure parse_data (1)**

.

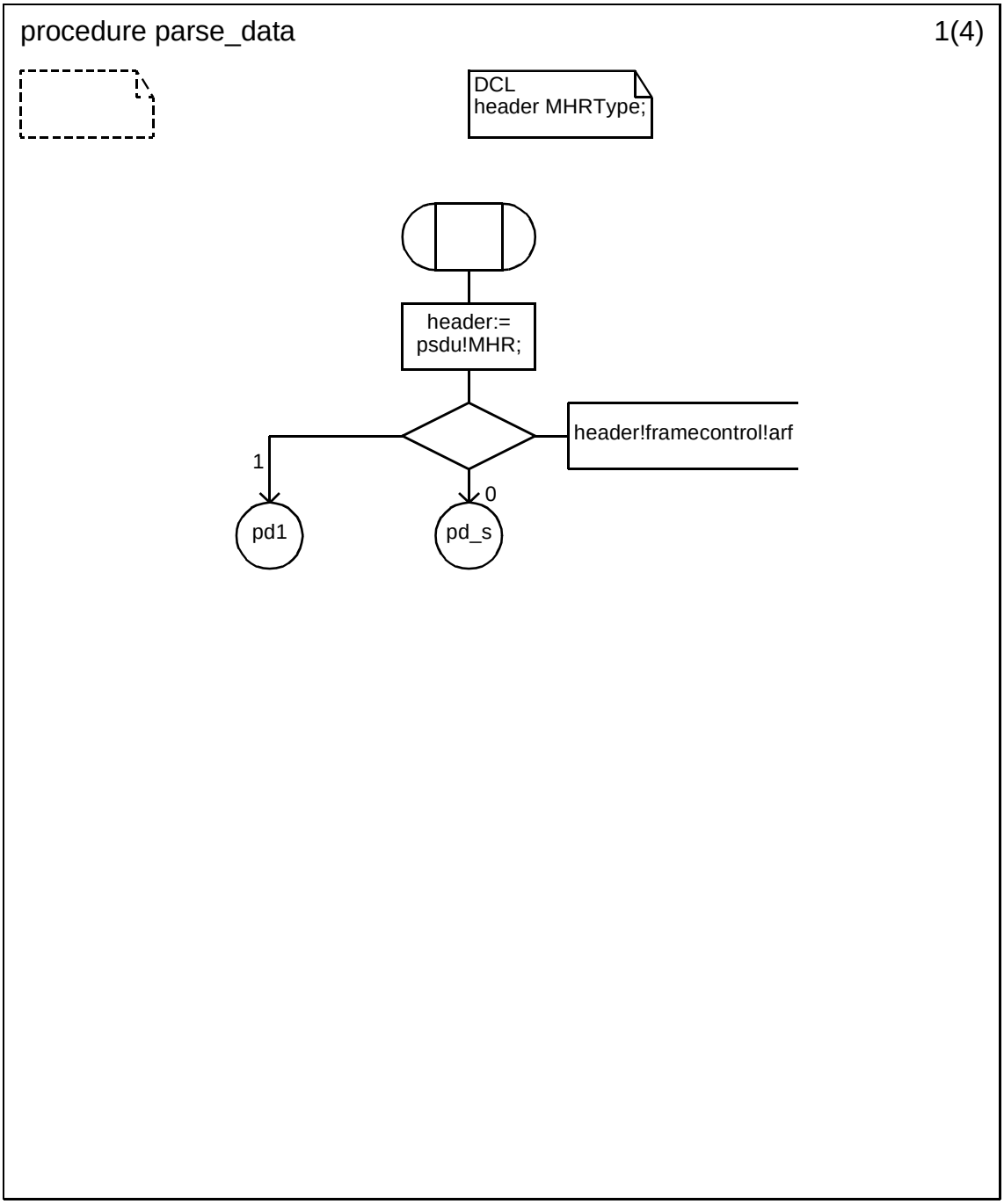


Copyright © 2003 IEEE. All rights reserved.

Authorized licensed use limited to: IEEE - Staff. Downloaded on October 28,2024 at 20:20:02 UTC from IEEE Xplore. Restrictions apply.

INTEL-1011
U.S. Patent 8,219,129

**D.3.1.154.82.30 Procedure parse_data (2)**

.

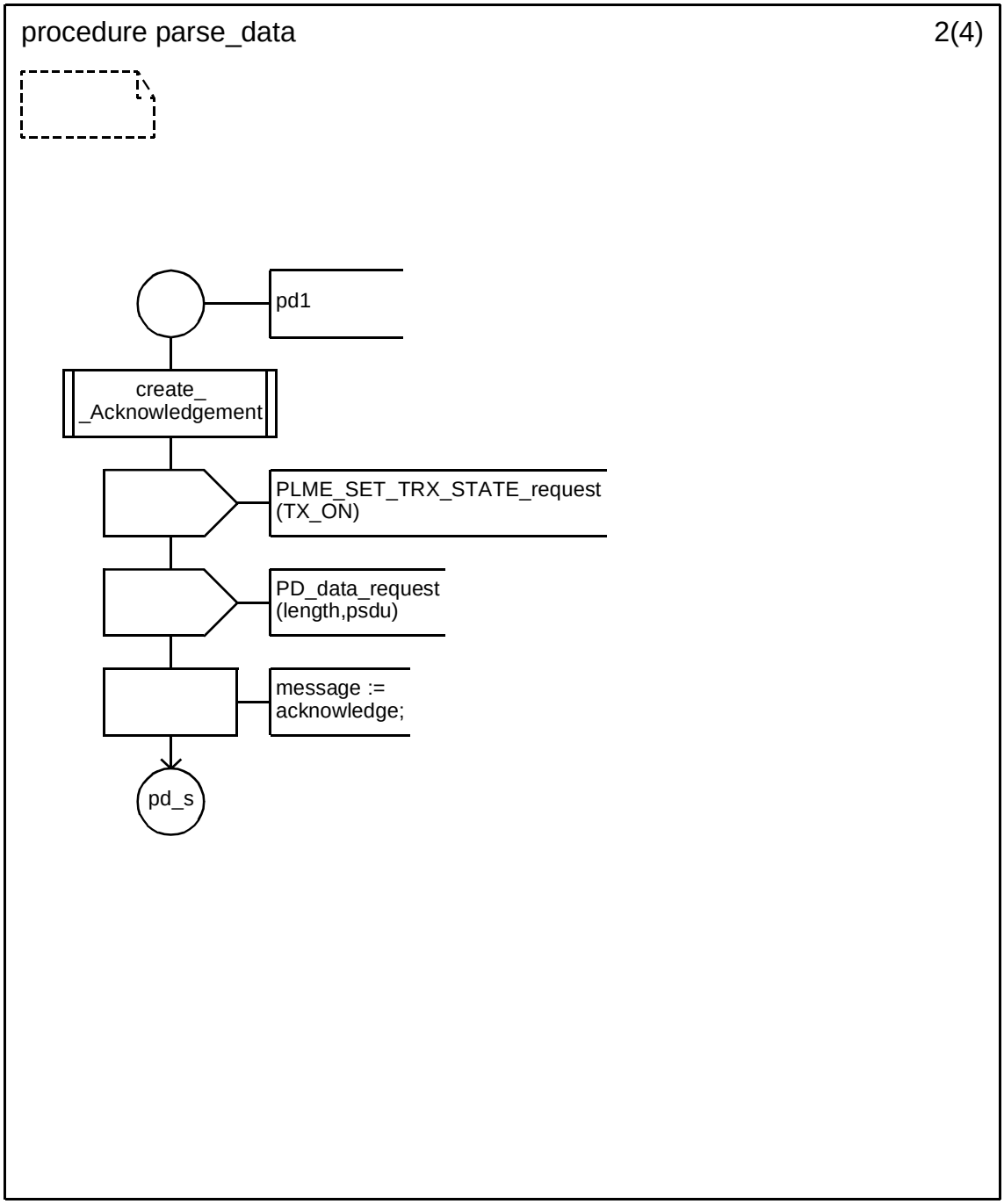



Copyright © 2003 IEEE. All rights reserved.
Authorized licensed use limited to: IEEE - Staff. Downloaded on October 28,2024 at 20:20:02 UTC from IEEE Xplore. Restrictions apply.

INTEL-1011
U.S. Patent 8,219,129

**D.3.1.154.82.31 Procedure parse_data (3)**

.

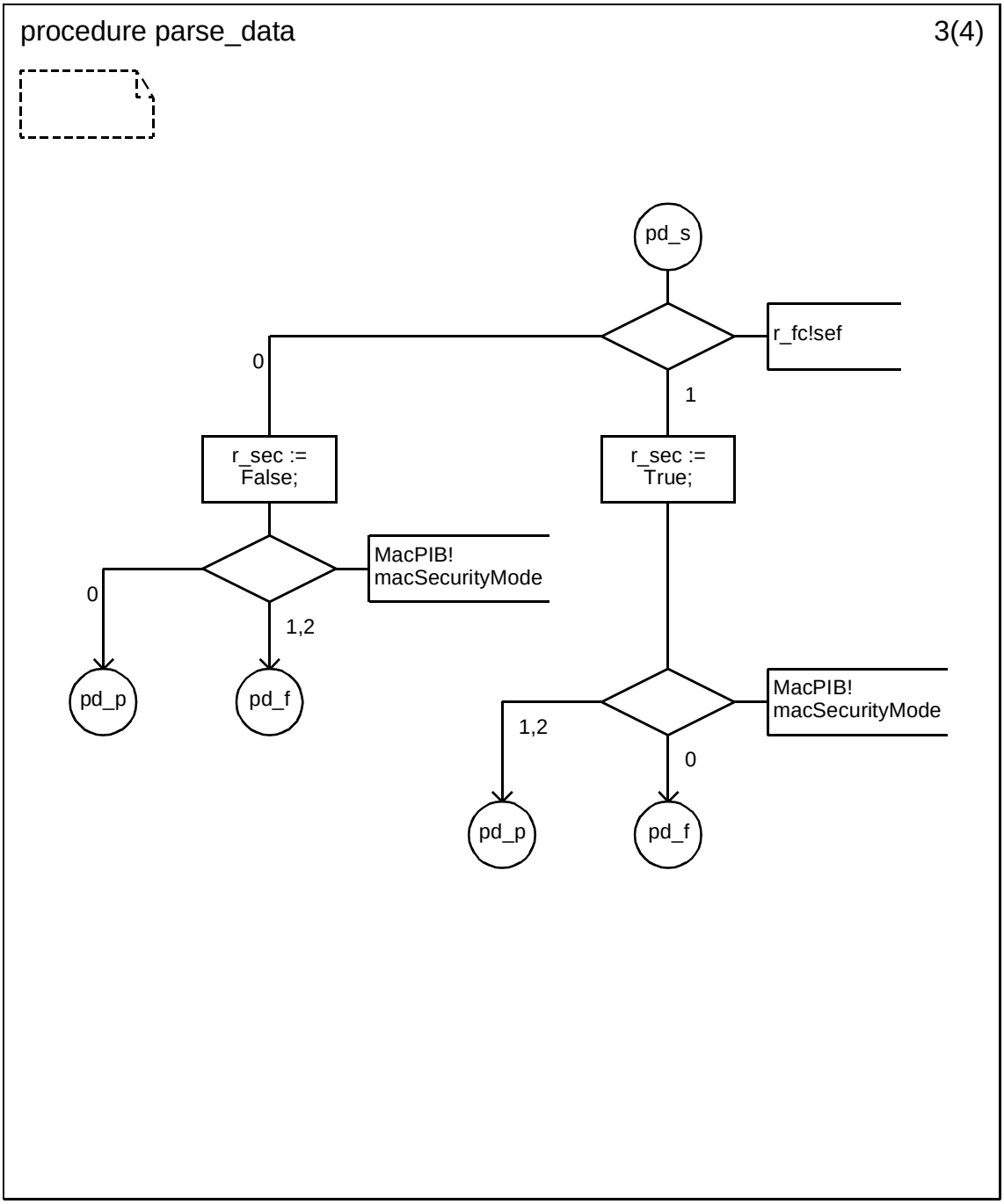


Copyright © 2003 IEEE. All rights reserved.

Authorized licensed use limited to: IEEE - Staff. Downloaded on October 28,2024 at 20:20:02 UTC from IEEE Xplore. Restrictions apply.

INTEL-1011
U.S. Patent 8,219,129

**D.3.1.154.82.32 Procedure parse_data (4)**

.

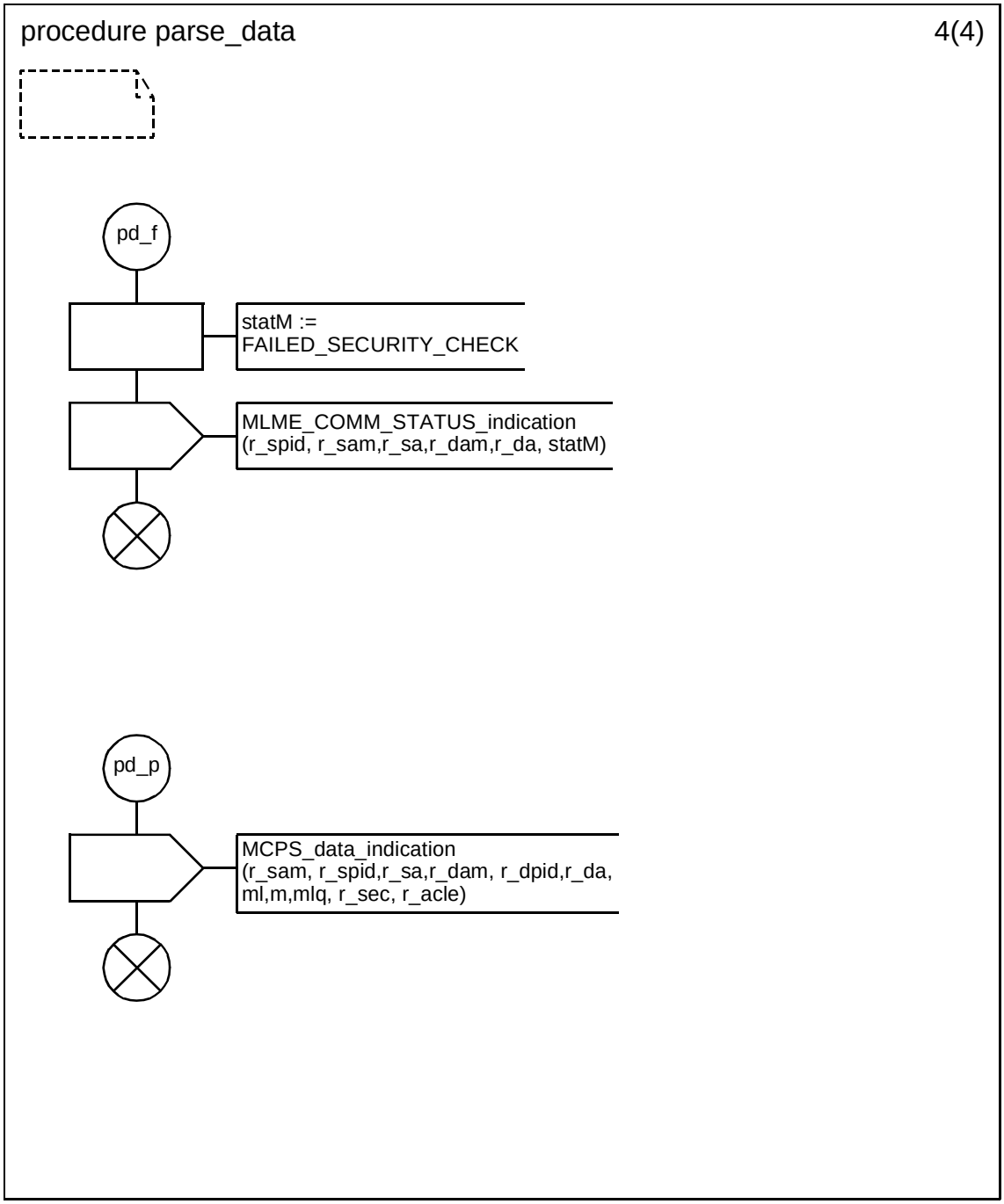



Copyright © 2003 IEEE. All rights reserved.
Authorized licensed use limited to: IEEE - Staff. Downloaded on October 28,2024 at 20:20:02 UTC from IEEE Xplore. Restrictions apply.

INTEL-1011
U.S. Patent 8,219,129

**D.3.1.154.82.33 Procedure parse_command (1)**

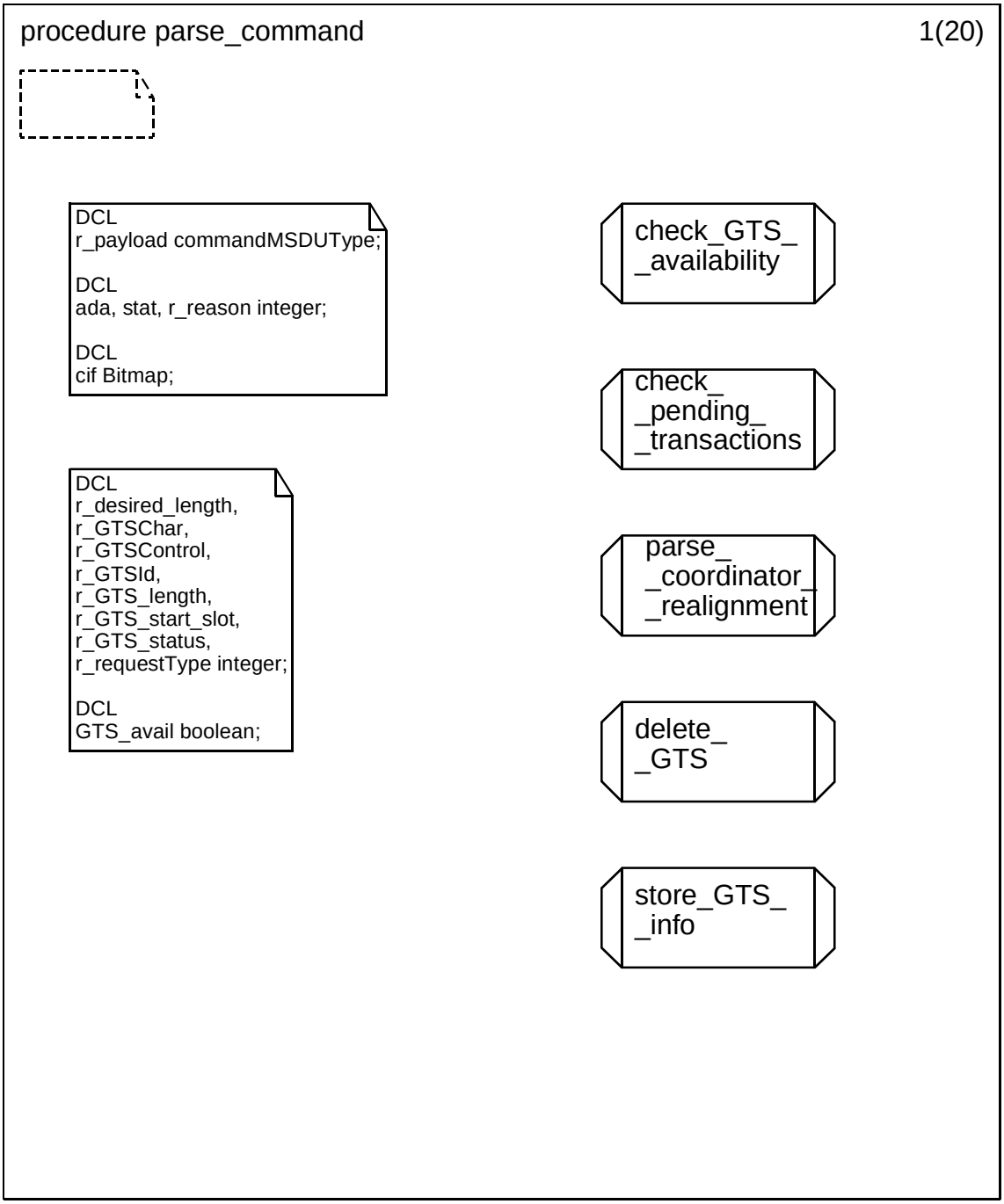


Copyright © 2003 IEEE. All rights reserved.

Authorized licensed use limited to: IEEE - Staff. Downloaded on October 28,2024 at 20:20:02 UTC from IEEE Xplore. Restrictions apply.

INTEL-1011
U.S. Patent 8,219,129

**D.3.1.154.82.34 Procedure parse_command (2)**

.

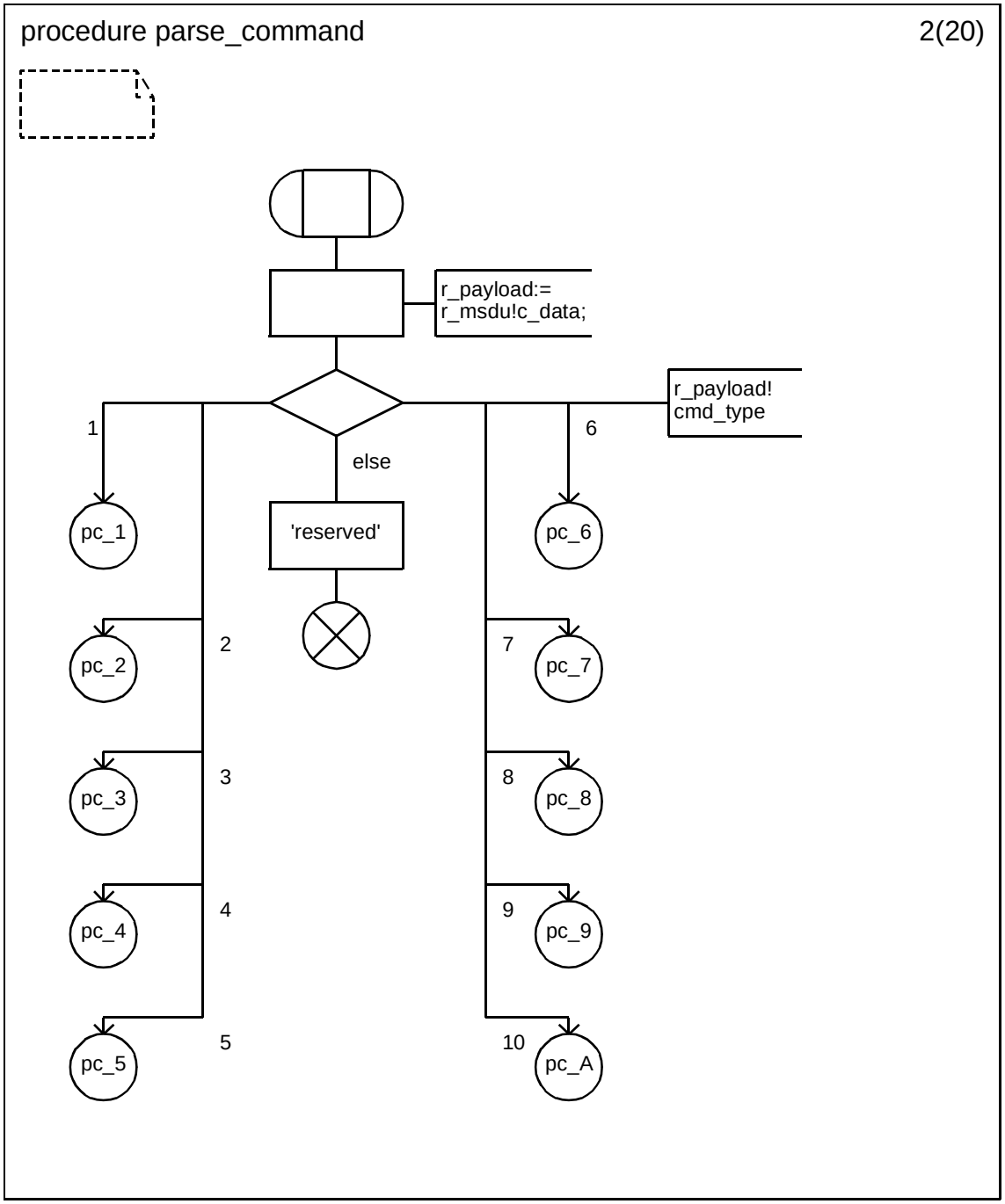



Copyright © 2003 IEEE. All rights reserved.
Authorized licensed use limited to: IEEE - Staff. Downloaded on October 28,2024 at 20:20:02 UTC from IEEE Xplore. Restrictions apply.

INTEL-1011
U.S. Patent 8,219,129

### D.3.1.154.82.35 Procedure parse_command (3)

.

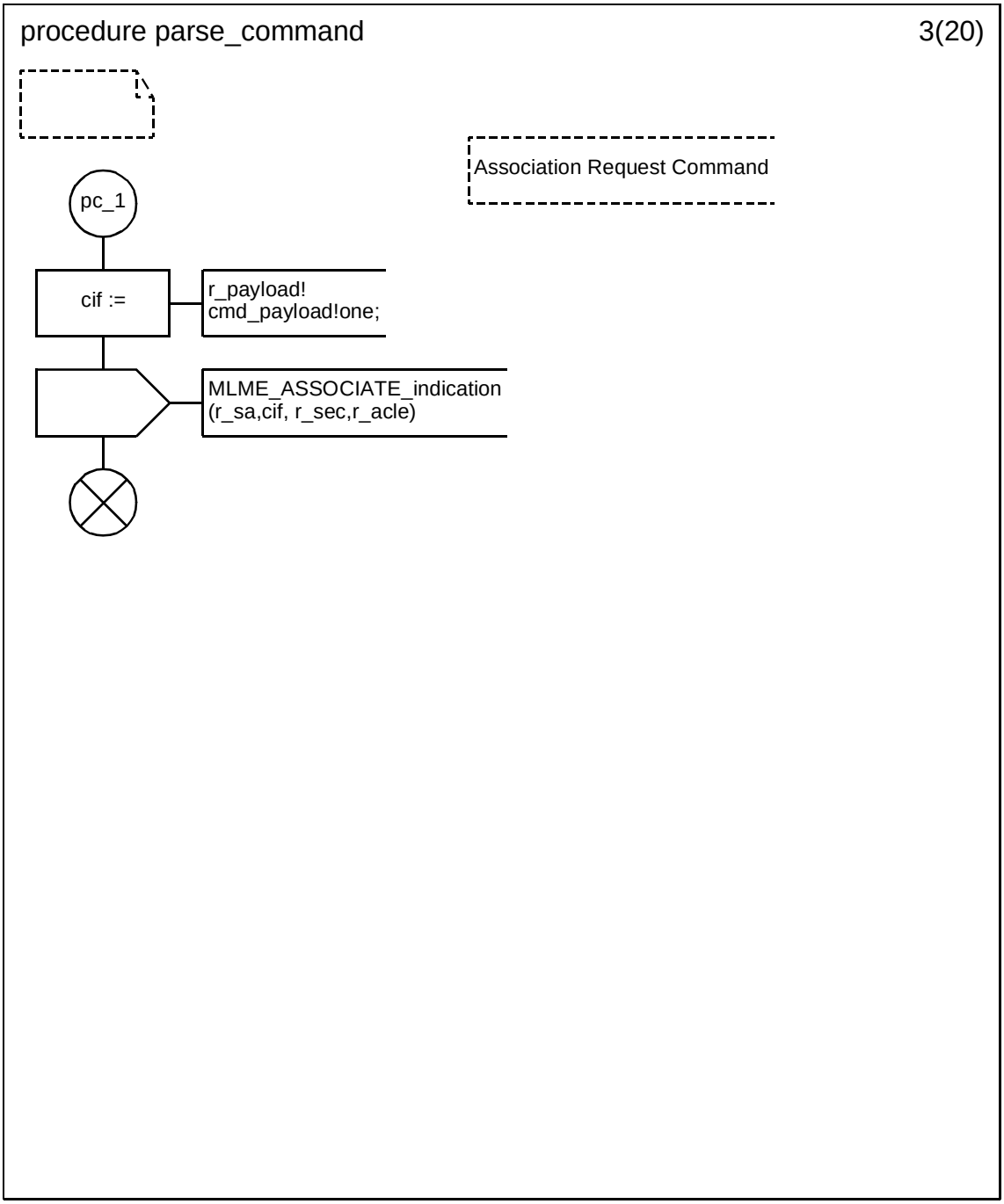


Copyright © 2003 IEEE. All rights reserved.

Authorized licensed use limited to: IEEE - Staff. Downloaded on October 28,2024 at 20:20:02 UTC from IEEE Xplore. Restrictions apply.

INTEL-1011
U.S. Patent 8,219,129

**D.3.1.154.82.36 Procedure parse_command (4)**

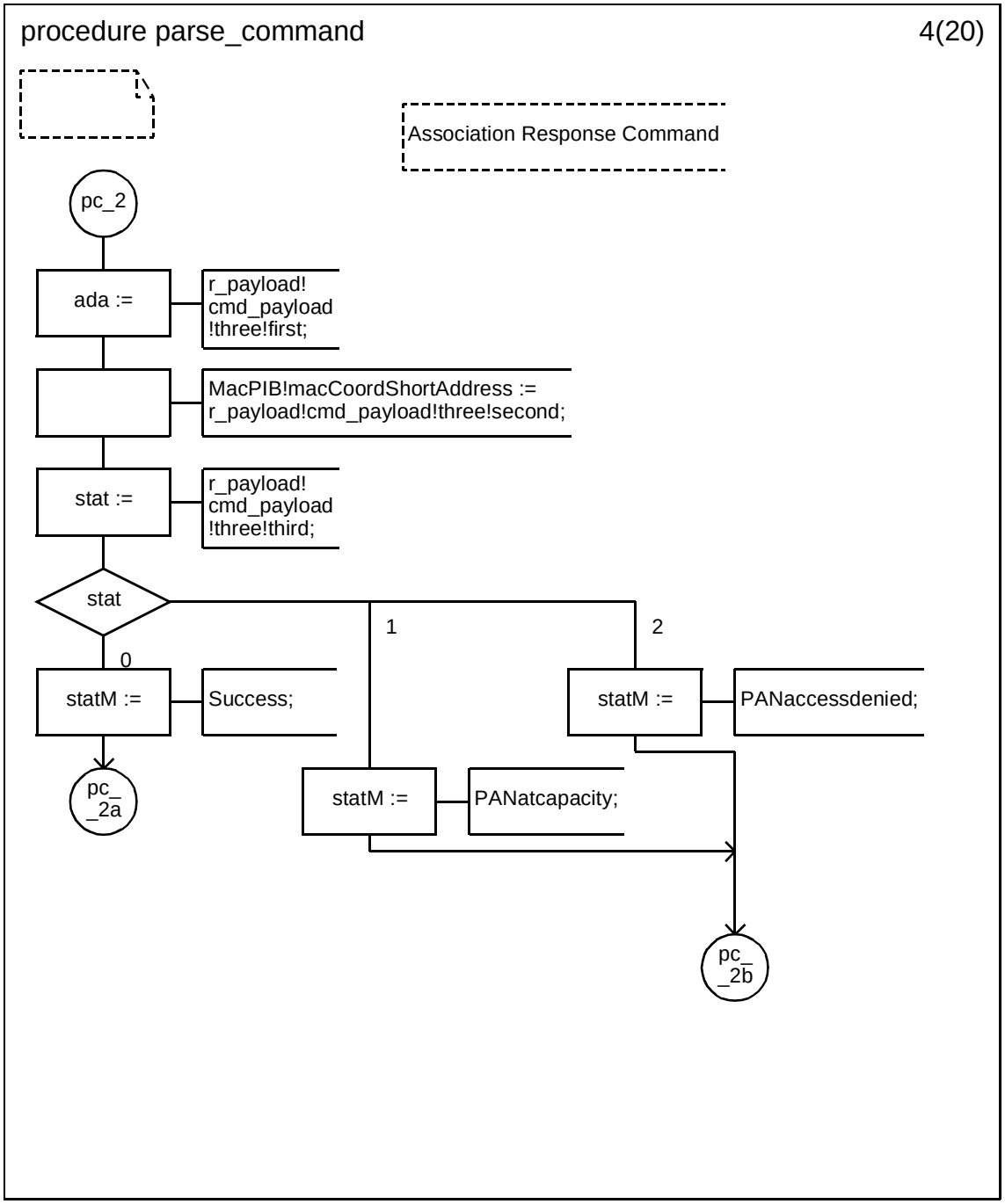



Copyright © 2003 IEEE. All rights reserved.
Authorized licensed use limited to: IEEE - Staff. Downloaded on October 28,2024 at 20:20:02 UTC from IEEE Xplore. Restrictions apply.

INTEL-1011
U.S. Patent 8,219,129

### D.3.1.154.82.37 Procedure parse_command (5)

.

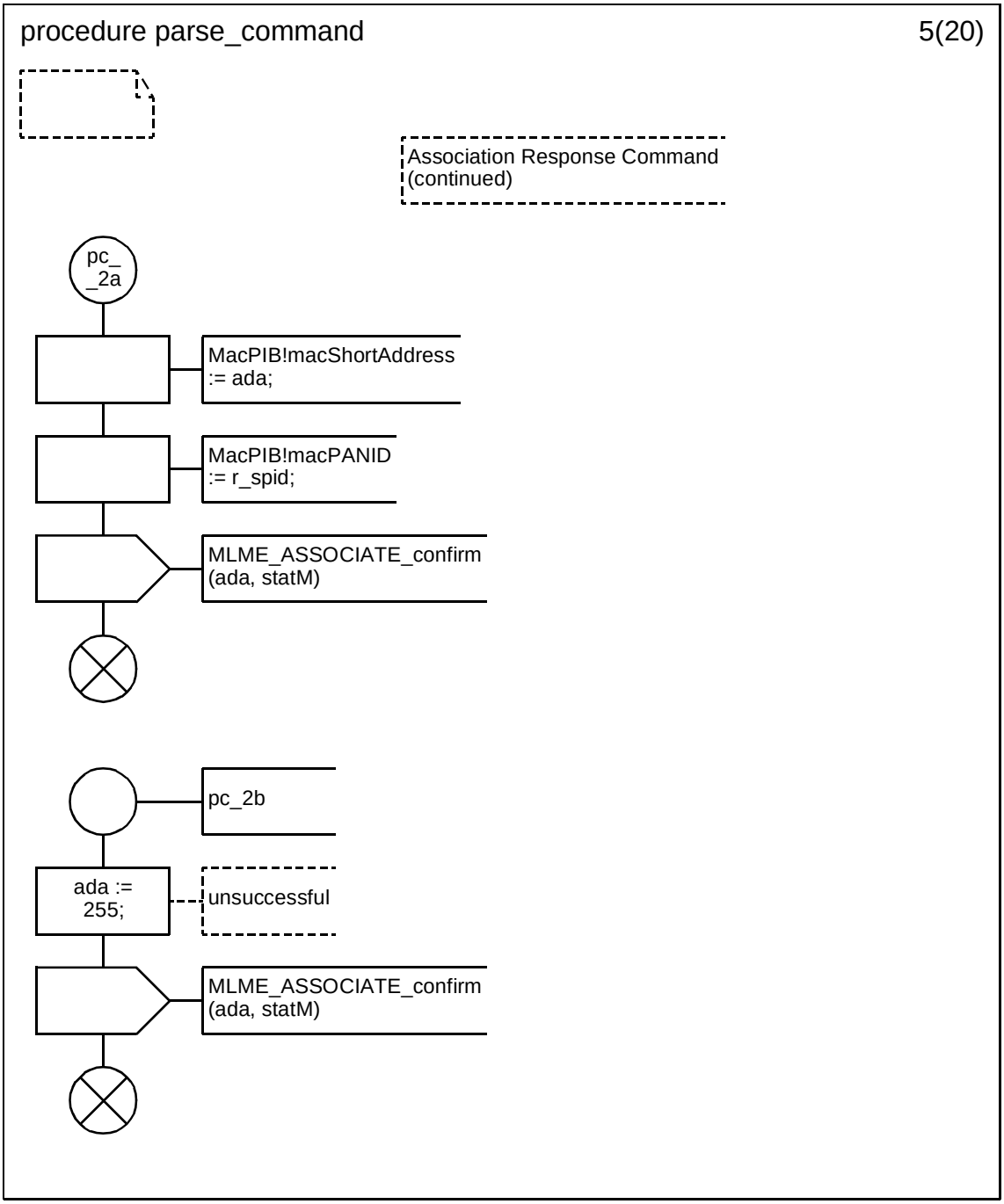


Copyright © 2003 IEEE. All rights reserved.

Authorized licensed use limited to: IEEE - Staff. Downloaded on October 28,2024 at 20:20:02 UTC from IEEE Xplore. Restrictions apply.

INTEL-1011
U.S. Patent 8,219,129

**D.3.1.154.82.38 Procedure parse_command (6)**

.

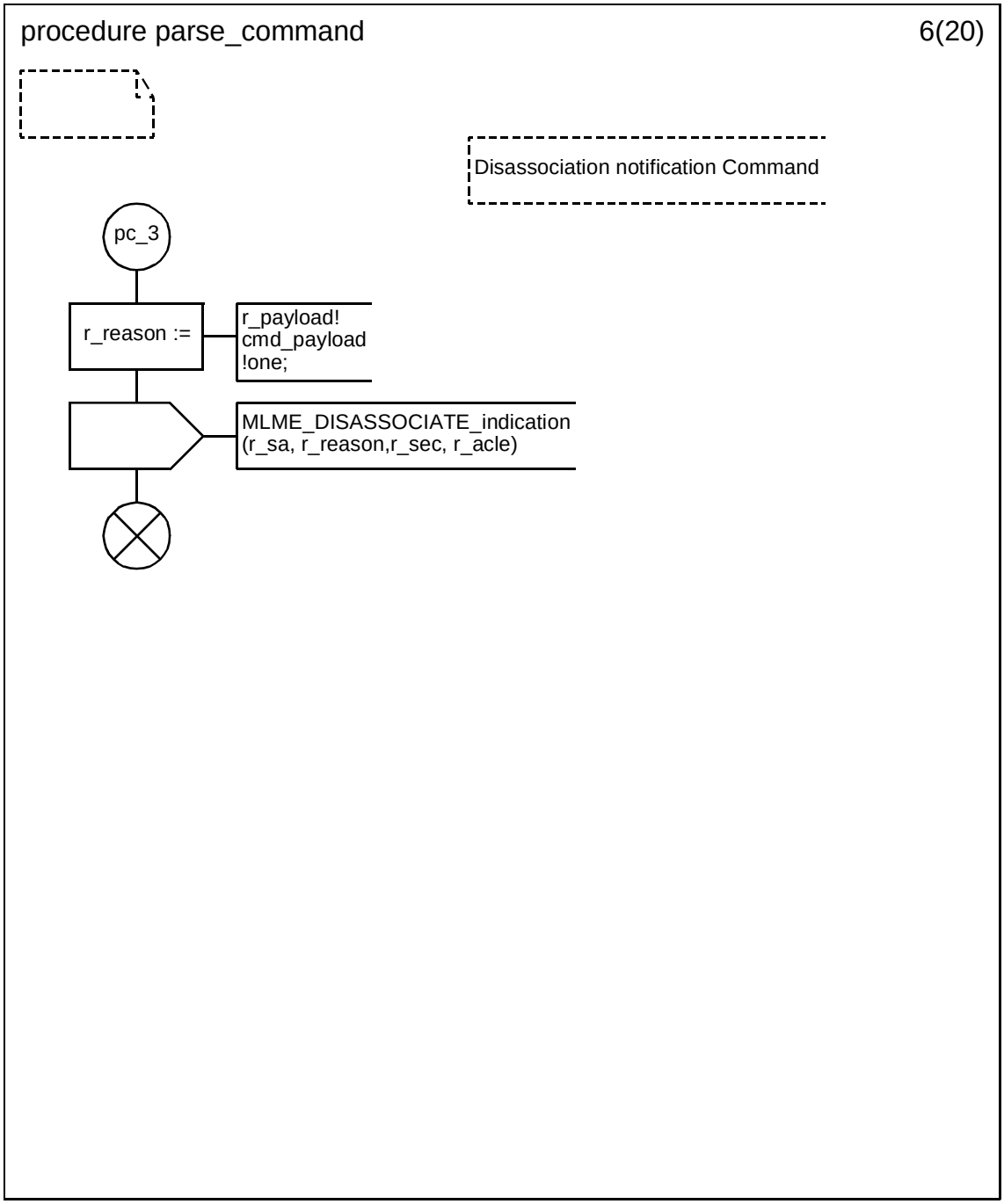



Copyright © 2003 IEEE. All rights reserved.
Authorized licensed use limited to: IEEE - Staff. Downloaded on October 28,2024 at 20:20:02 UTC from IEEE Xplore. Restrictions apply.

INTEL-1011
U.S. Patent 8,219,129

### D.3.1.154.82.39 Procedure parse_command (7)

.

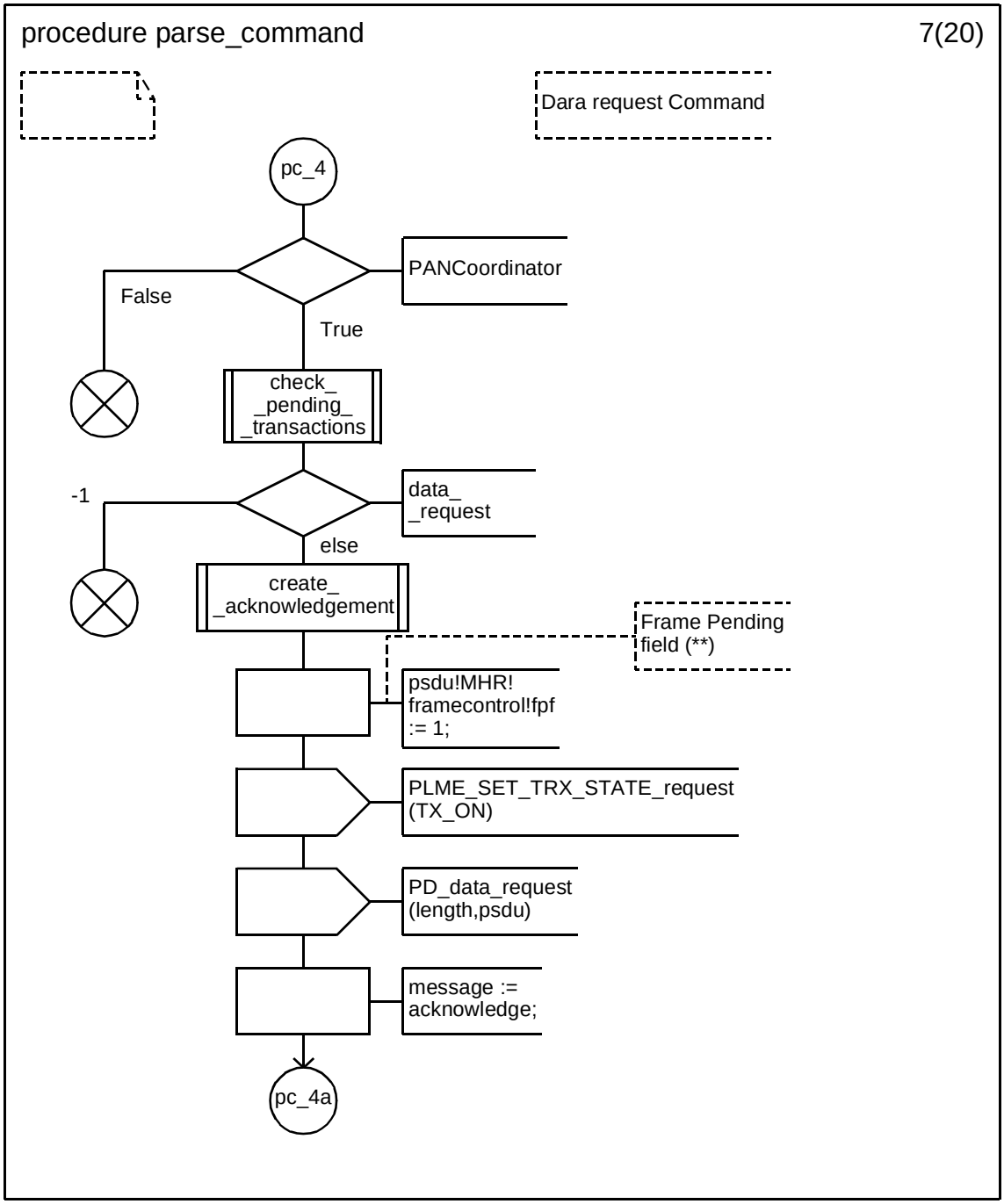


Copyright © 2003 IEEE. All rights reserved.

Authorized licensed use limited to: IEEE - Staff. Downloaded on October 28,2024 at 20:20:02 UTC from IEEE Xplore. Restrictions apply.

INTEL-1011
U.S. Patent 8,219,129

**D.3.1.154.82.40 Procedure parse_command (8)**

.

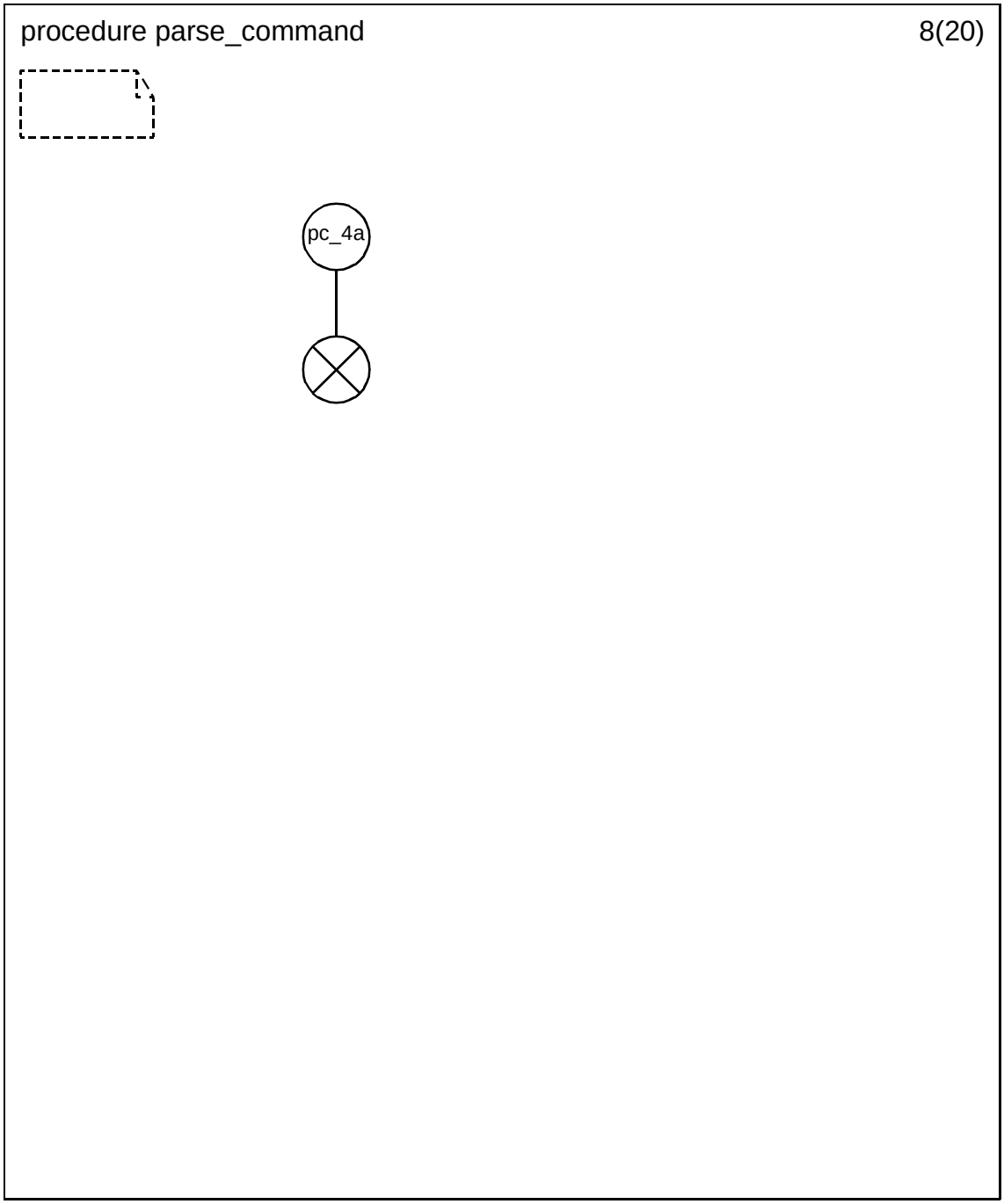



Copyright © 2003 IEEE. All rights reserved.
Authorized licensed use limited to: IEEE - Staff. Downloaded on October 28,2024 at 20:20:02 UTC from IEEE Xplore. Restrictions apply.

INTEL-1011
U.S. Patent 8,219,129

**D.3.1.154.82.41 Procedure parse_command (9)**

.

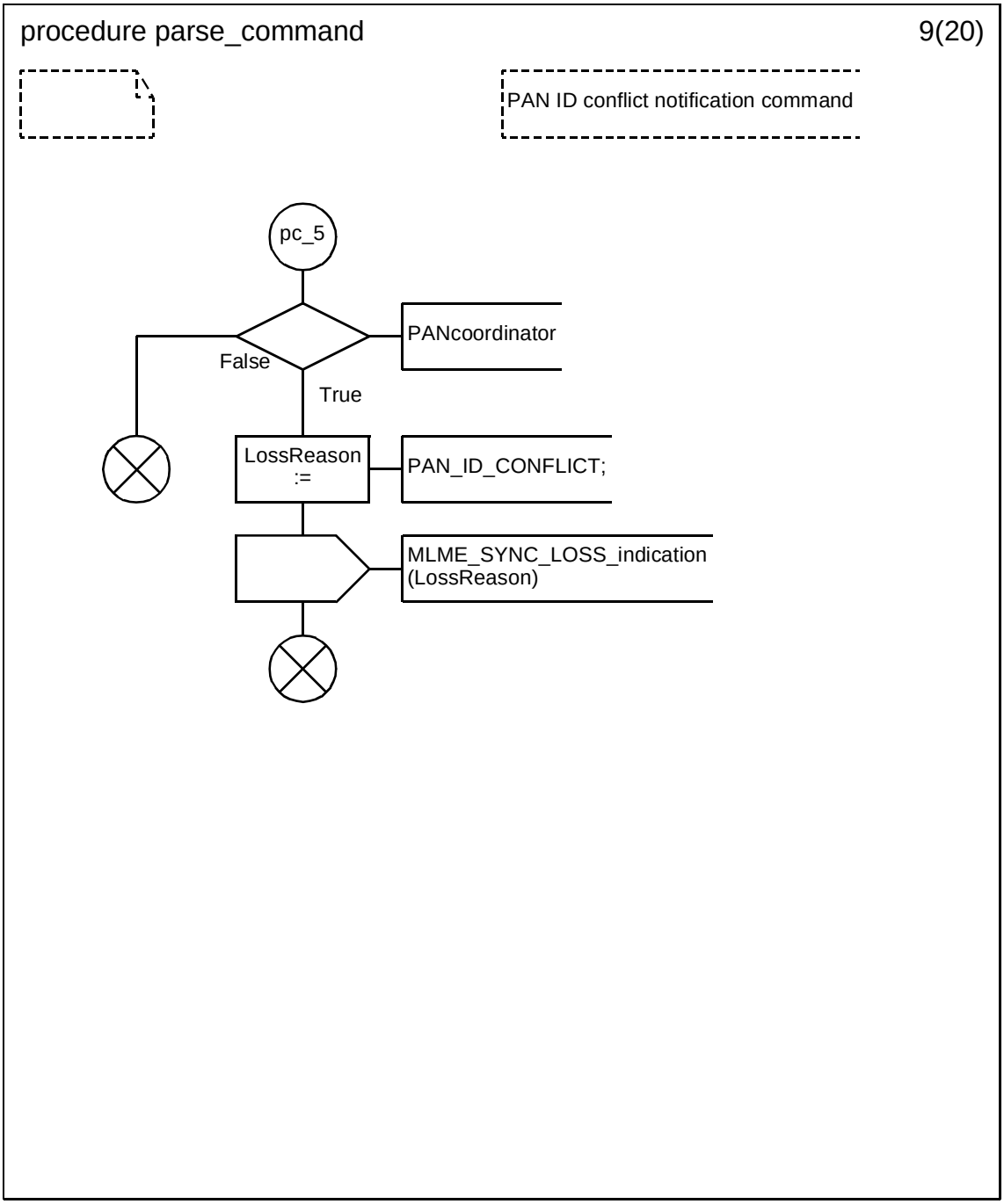


Copyright © 2003 IEEE. All rights reserved.

Authorized licensed use limited to: IEEE - Staff. Downloaded on October 28,2024 at 20:20:02 UTC from IEEE Xplore. Restrictions apply.

INTEL-1011
U.S. Patent 8,219,129

**D.3.1.154.82.42 Procedure parse_command (10)**

.

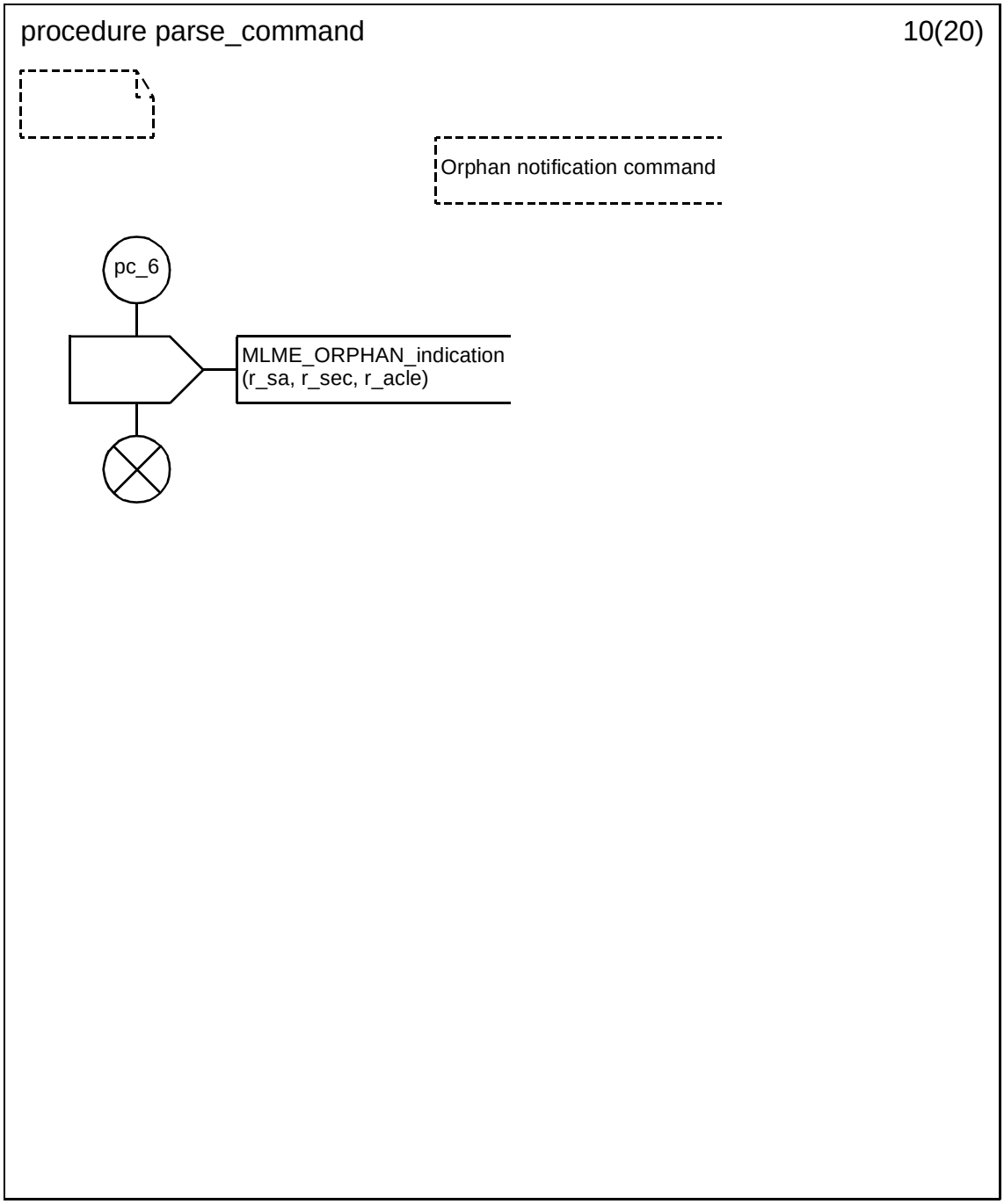



Copyright © 2003 IEEE. All rights reserved.
Authorized licensed use limited to: IEEE - Staff. Downloaded on October 28,2024 at 20:20:02 UTC from IEEE Xplore. Restrictions apply.

INTEL-1011
U.S. Patent 8,219,129

**D.3.1.154.82.43 Procedure parse_command (11)**

.

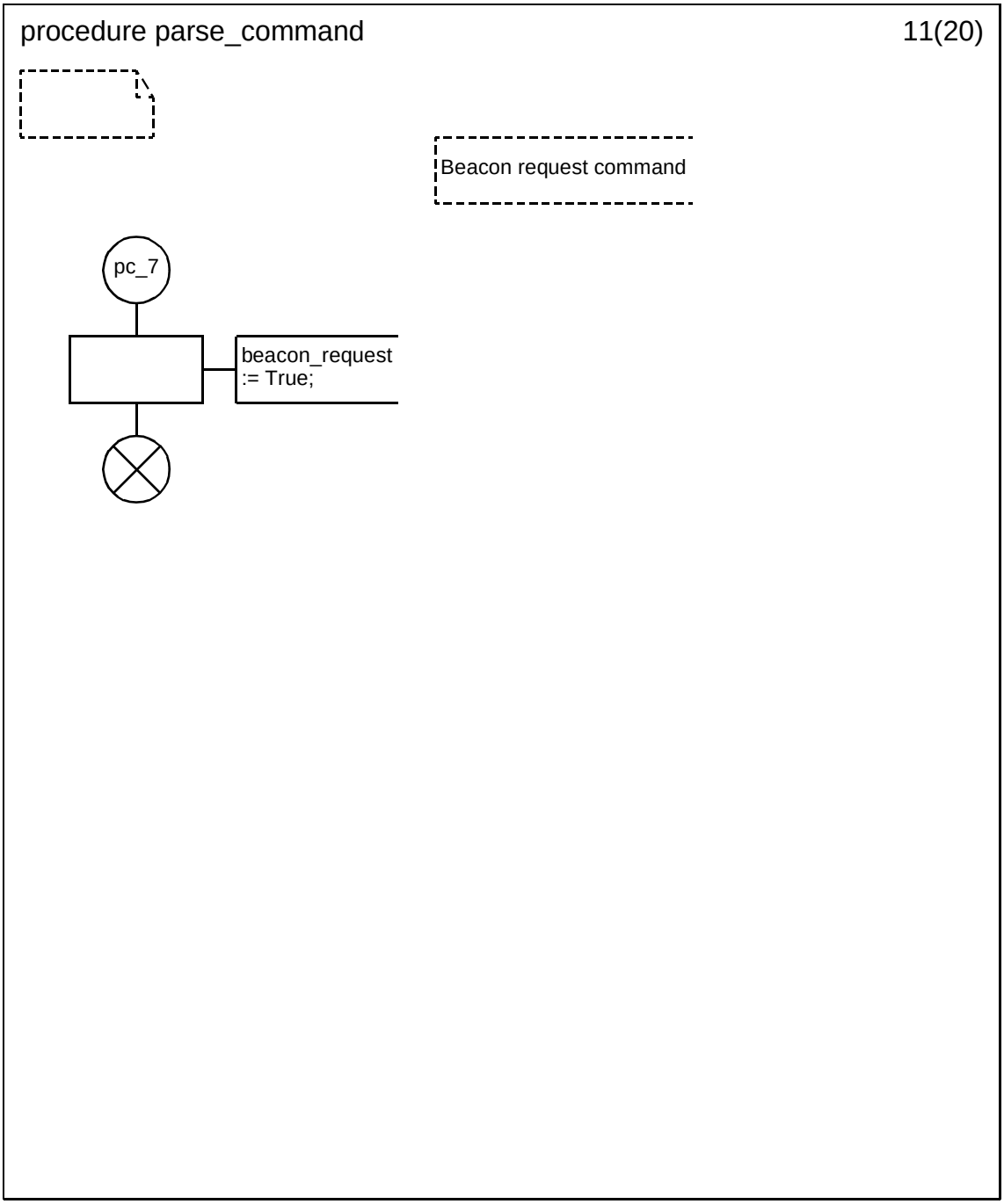


Copyright © 2003 IEEE. All rights reserved.

Authorized licensed use limited to: IEEE - Staff. Downloaded on October 28,2024 at 20:20:02 UTC from IEEE Xplore. Restrictions apply.

INTEL-1011
U.S. Patent 8,219,129

**D.3.1.154.82.44 Procedure parse_command (12)**

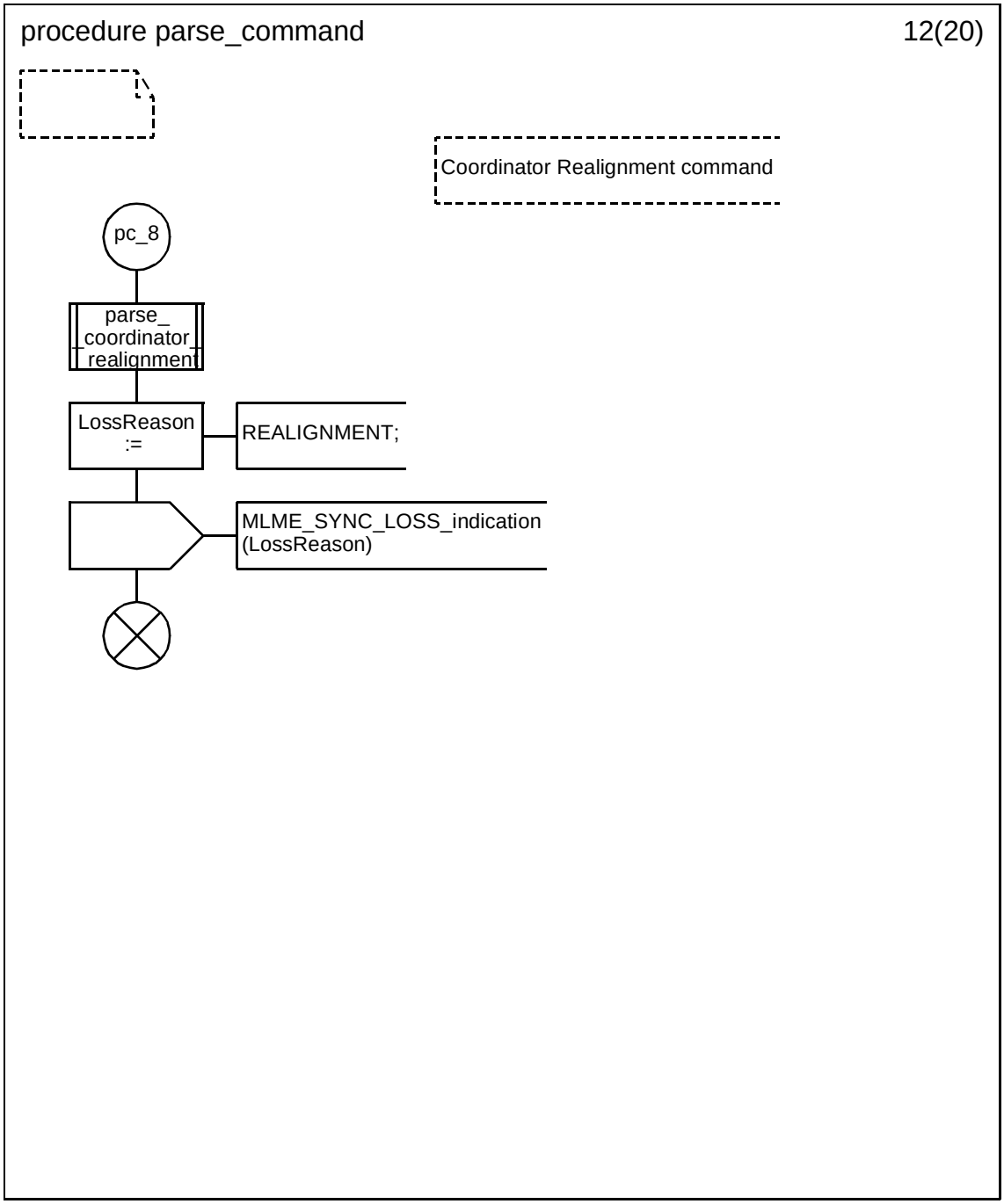



Copyright © 2003 IEEE. All rights reserved.
Authorized licensed use limited to: IEEE - Staff. Downloaded on October 28,2024 at 20:20:02 UTC from IEEE Xplore. Restrictions apply.

INTEL-1011
U.S. Patent 8,219,129

### D.3.1.154.82.45 Procedure parse_command (13)

.

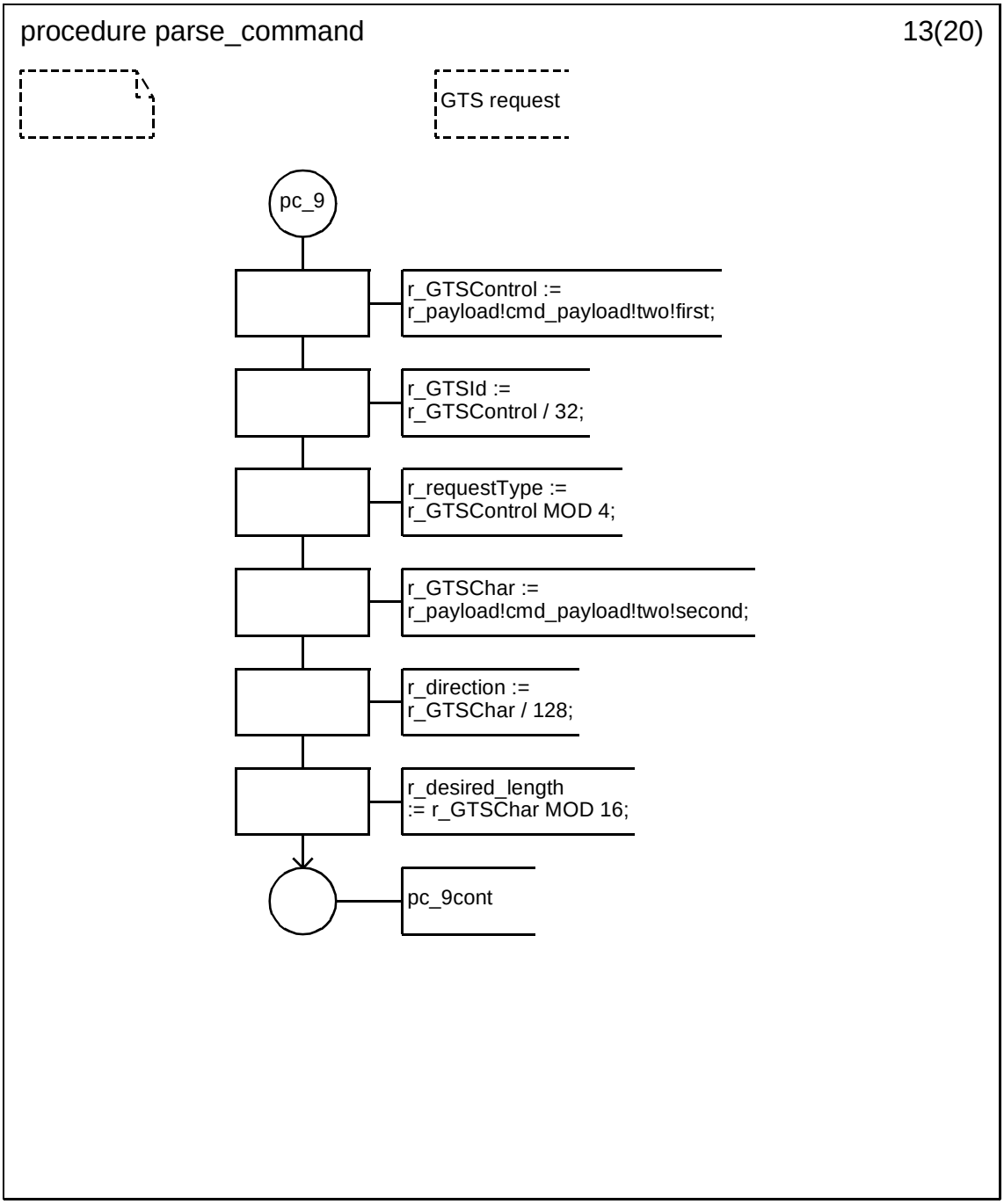


Copyright © 2003 IEEE. All rights reserved.

Authorized licensed use limited to: IEEE - Staff. Downloaded on October 28,2024 at 20:20:02 UTC from IEEE Xplore. Restrictions apply.

INTEL-1011
U.S. Patent 8,219,129

**D.3.1.154.82.46 Procedure parse_command (14)**

.

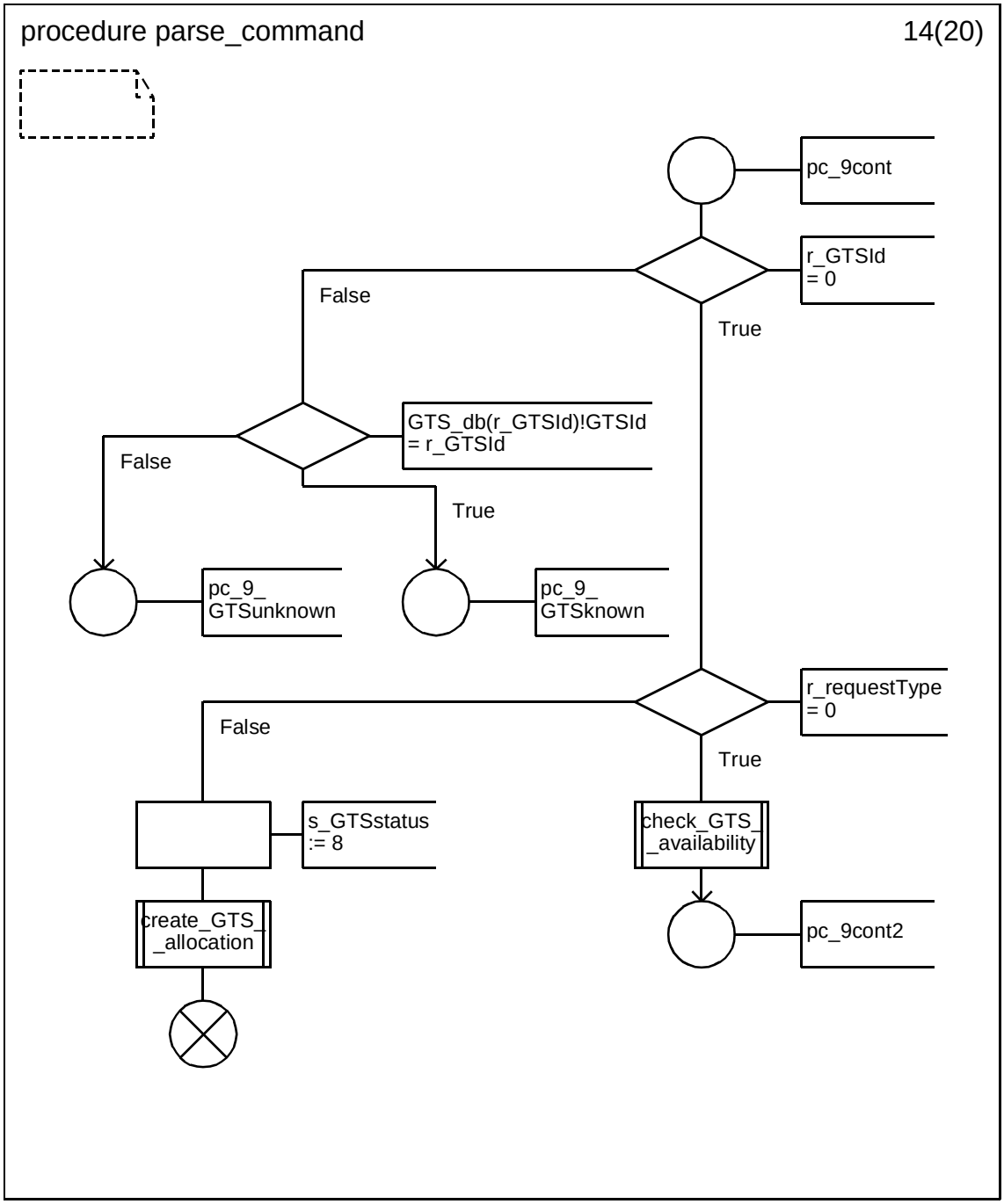



Copyright © 2003 IEEE. All rights reserved.
Authorized licensed use limited to: IEEE - Staff. Downloaded on October 28,2024 at 20:20:02 UTC from IEEE Xplore. Restrictions apply.

INTEL-1011
U.S. Patent 8,219,129

**D.3.1.154.82.47 Procedure parse_command (15)**

.

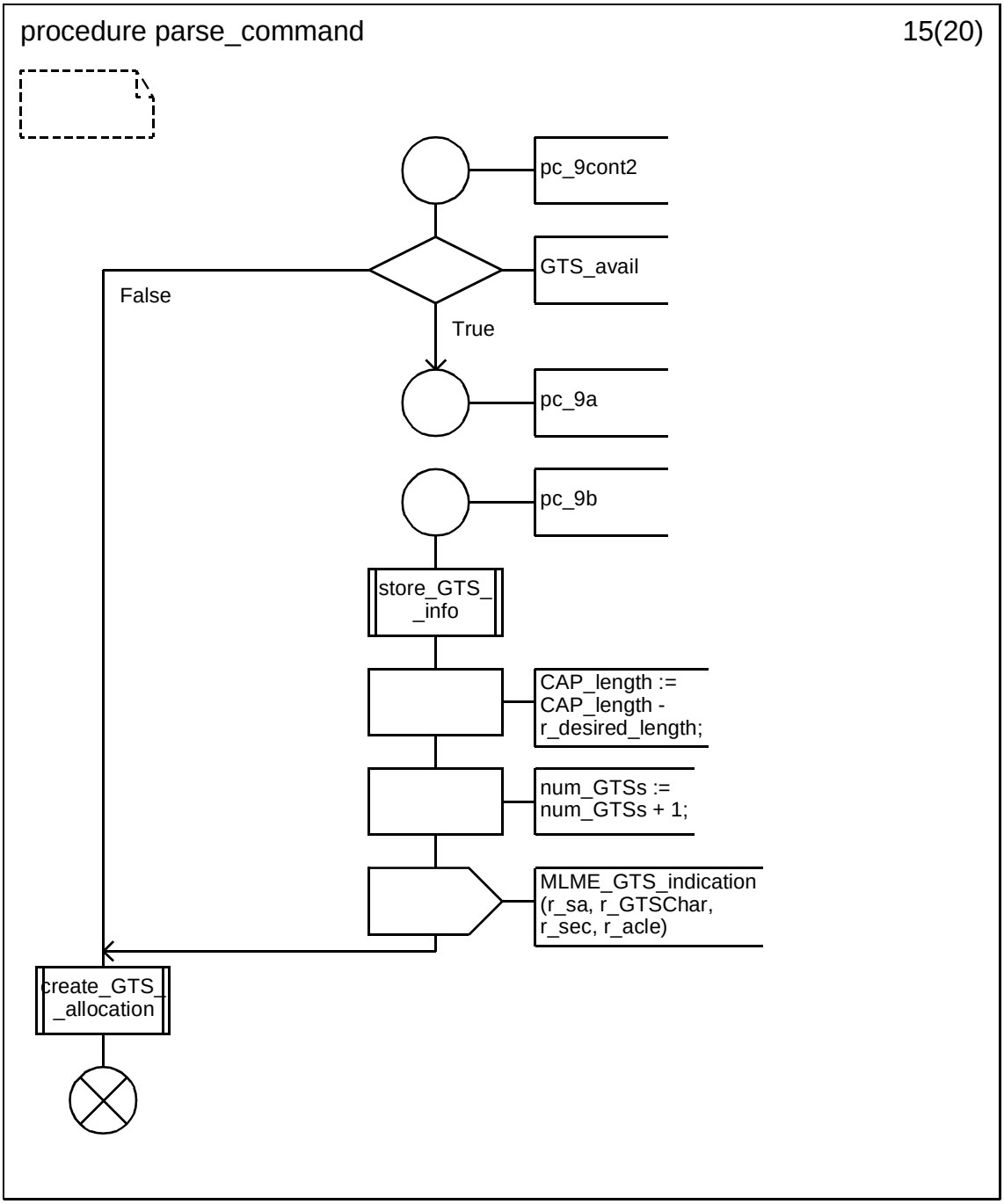


Copyright © 2003 IEEE. All rights reserved.

Authorized licensed use limited to: IEEE - Staff. Downloaded on October 28,2024 at 20:20:02 UTC from IEEE Xplore. Restrictions apply.

INTEL-1011
U.S. Patent 8,219,129

**D.3.1.154.82.48 Procedure parse_command (16)**

.

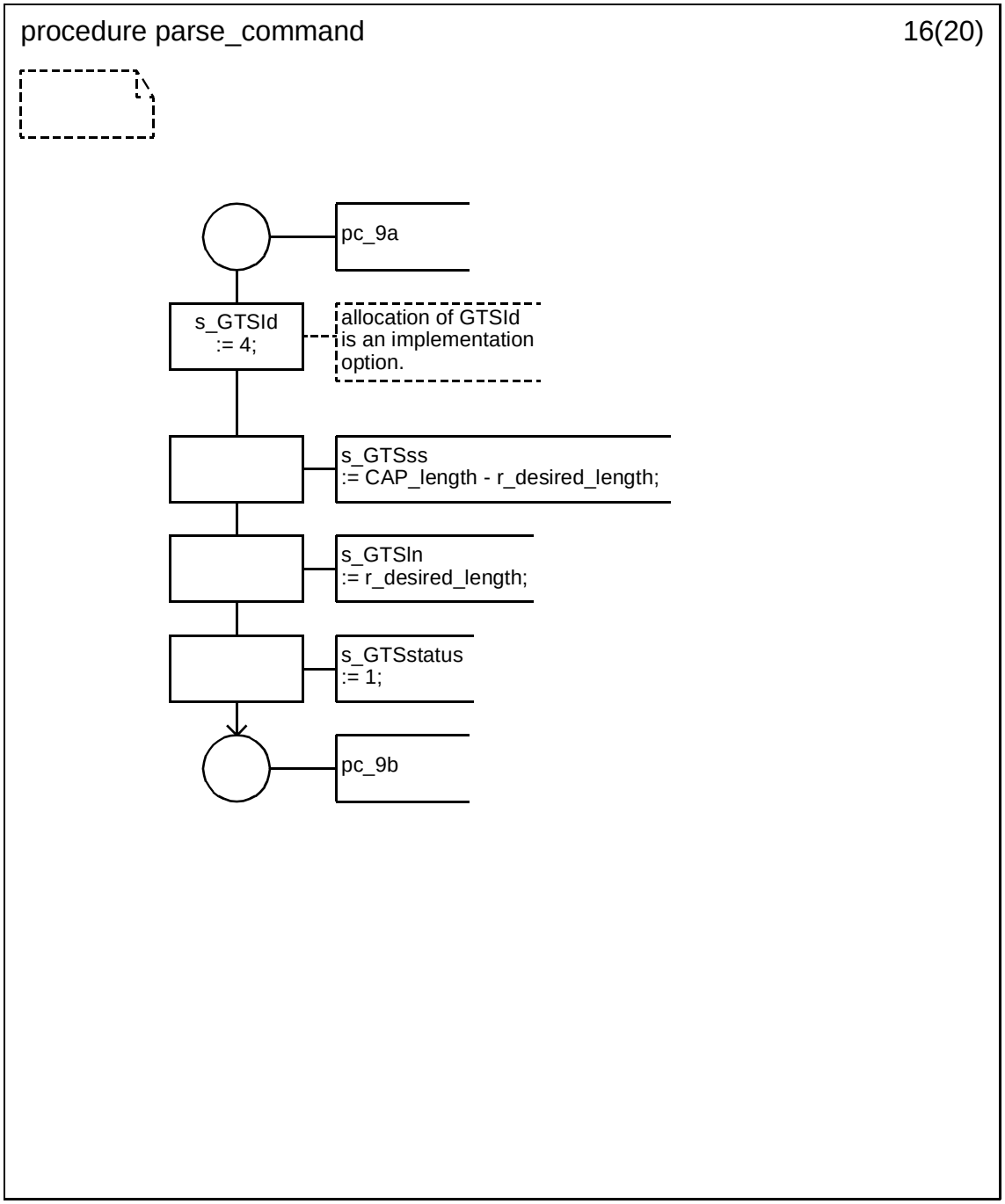



Copyright © 2003 IEEE. All rights reserved.
Authorized licensed use limited to: IEEE - Staff. Downloaded on October 28,2024 at 20:20:02 UTC from IEEE Xplore. Restrictions apply.

INTEL-1011
U.S. Patent 8,219,129

**D.3.1.154.82.49 Procedure parse_command (17)**

.

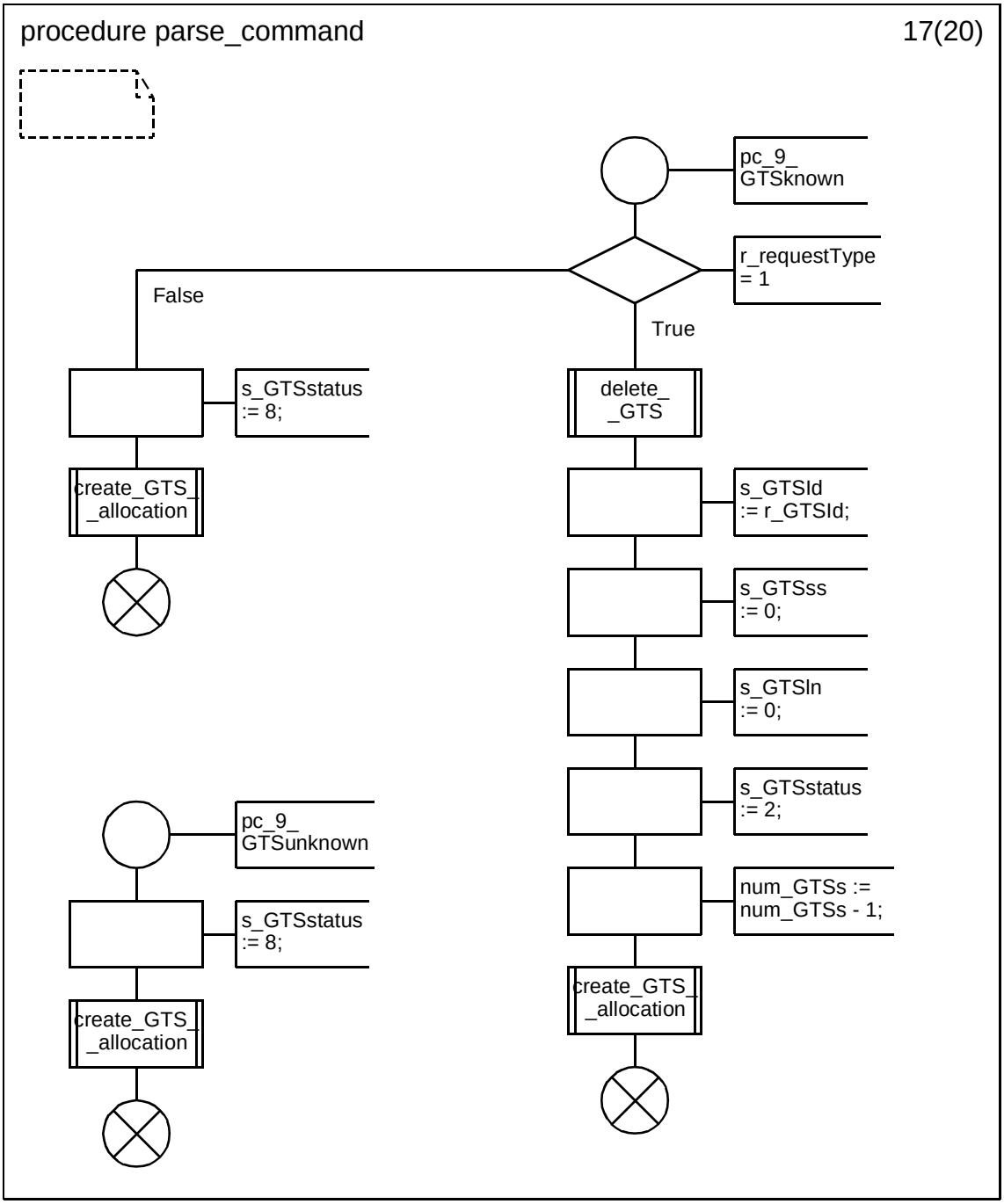


Copyright © 2003 IEEE. All rights reserved.

Authorized licensed use limited to: IEEE - Staff. Downloaded on October 28,2024 at 20:20:02 UTC from IEEE Xplore. Restrictions apply.

INTEL-1011
U.S. Patent 8,219,129

**D.3.1.154.82.50 Procedure parse_command (18)**

.

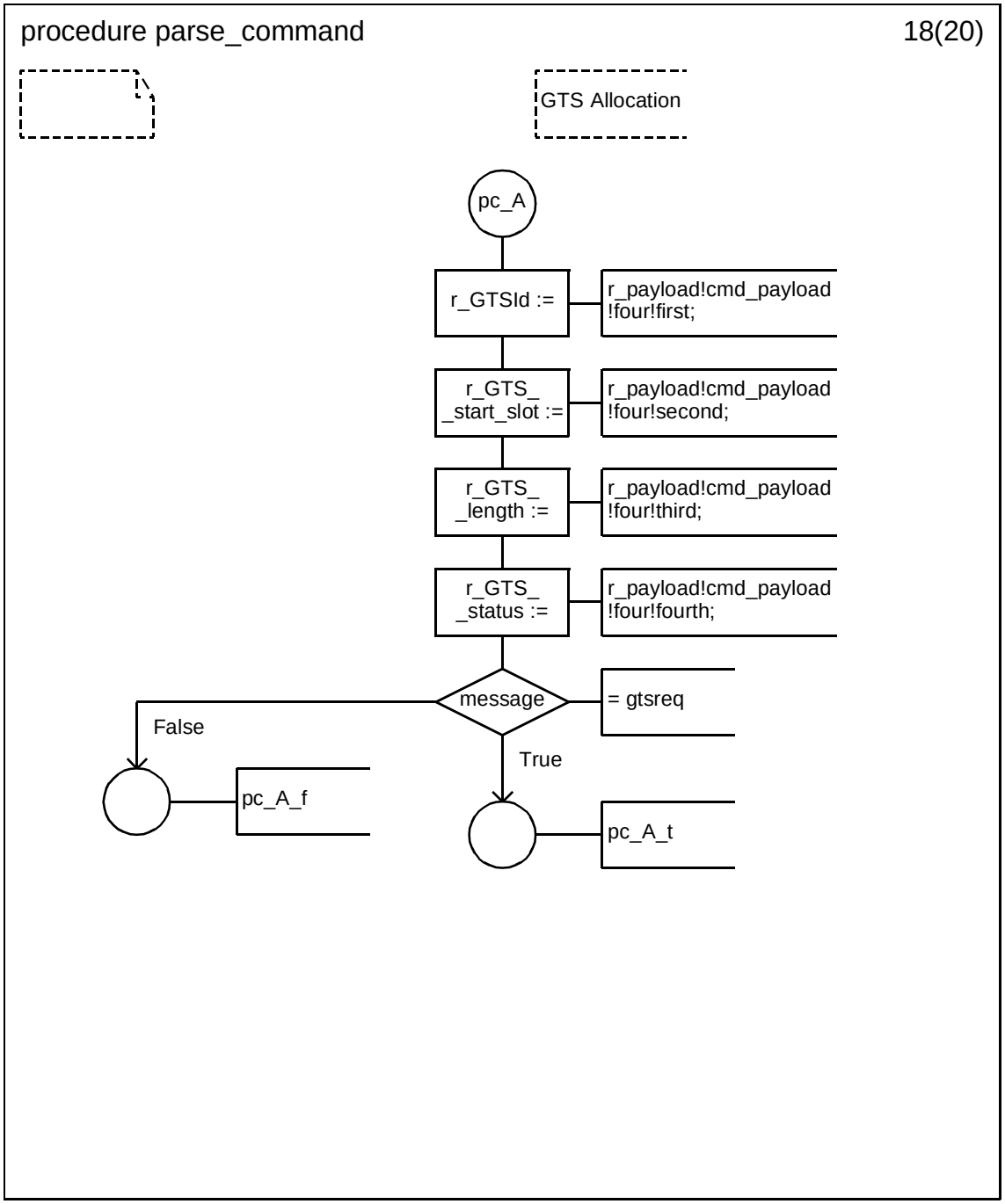



Copyright © 2003 IEEE. All rights reserved.
Authorized licensed use limited to: IEEE - Staff. Downloaded on October 28,2024 at 20:20:02 UTC from IEEE Xplore. Restrictions apply.

INTEL-1011
U.S. Patent 8,219,129

**D.3.1.154.82.51 Procedure parse_command (19)**

.

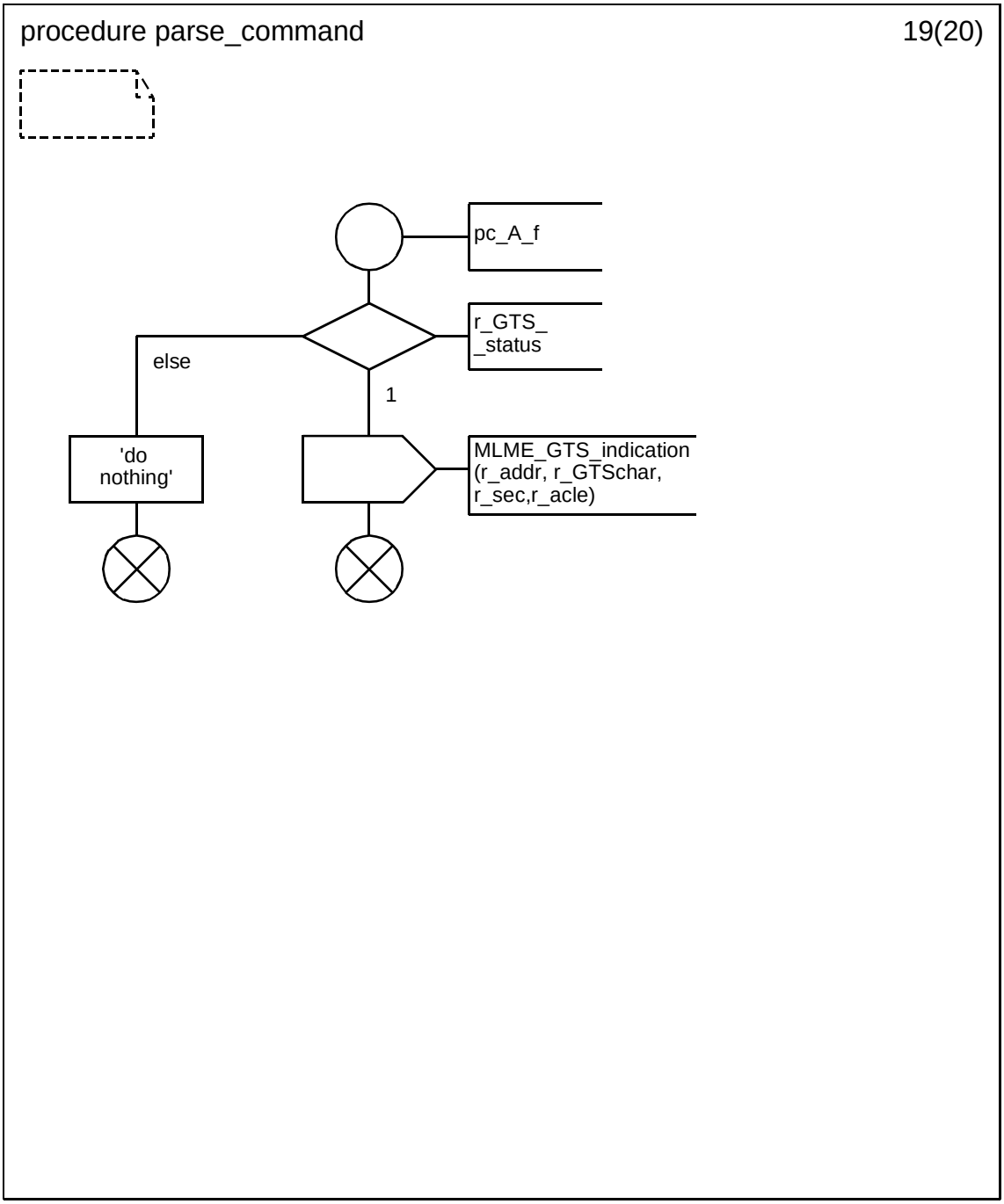


Copyright © 2003 IEEE. All rights reserved.

Authorized licensed use limited to: IEEE - Staff. Downloaded on October 28,2024 at 20:20:02 UTC from IEEE Xplore. Restrictions apply.

INTEL-1011
U.S. Patent 8,219,129

**D.3.1.154.82.52 Procedure parse_command (20)**

.

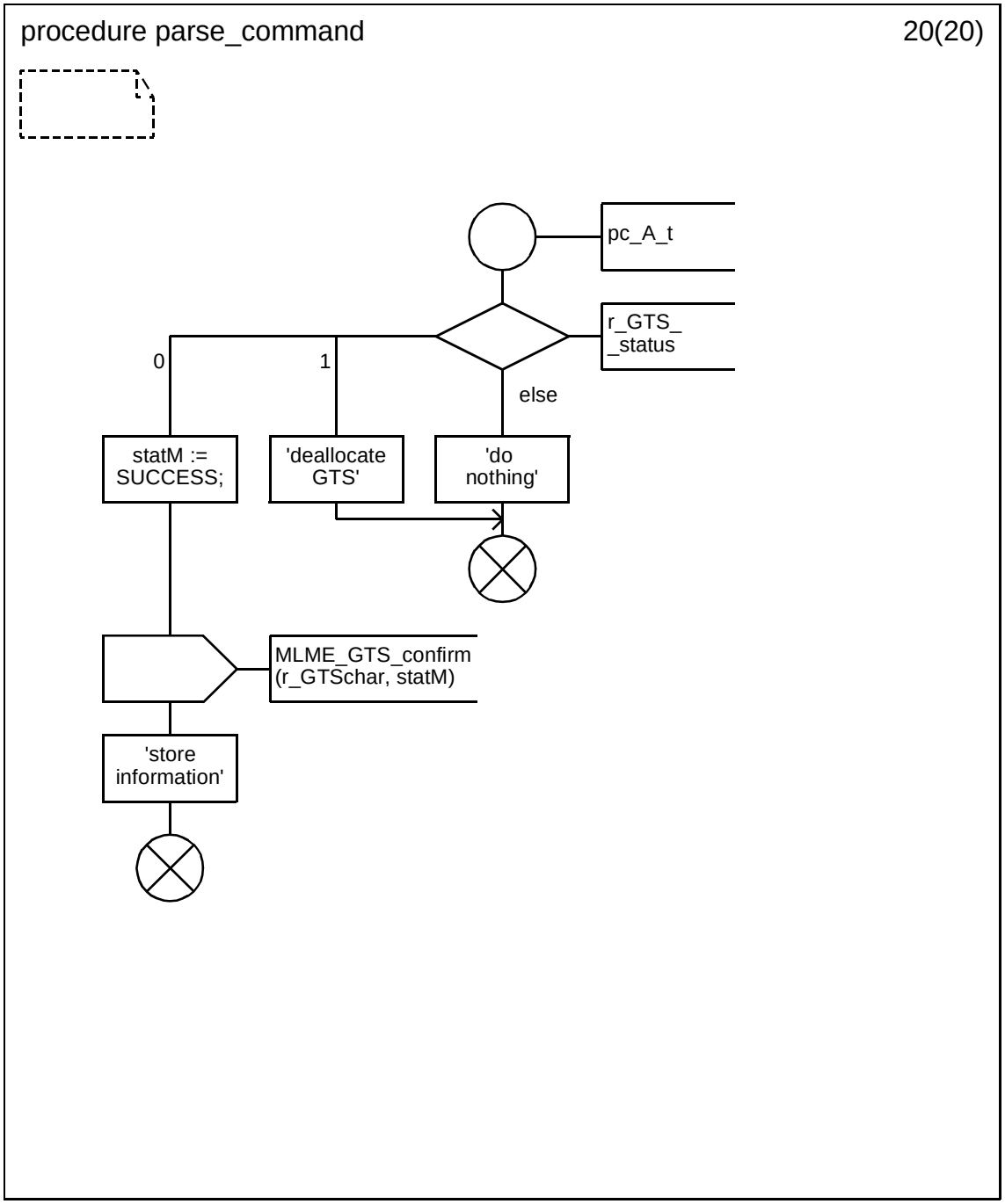



Copyright © 2003 IEEE. All rights reserved.
Authorized licensed use limited to: IEEE - Staff. Downloaded on October 28,2024 at 20:20:02 UTC from IEEE Xplore. Restrictions apply.

INTEL-1011
U.S. Patent 8,219,129

### D.3.1.154.82.53 Procedure check_pending_transactions

.

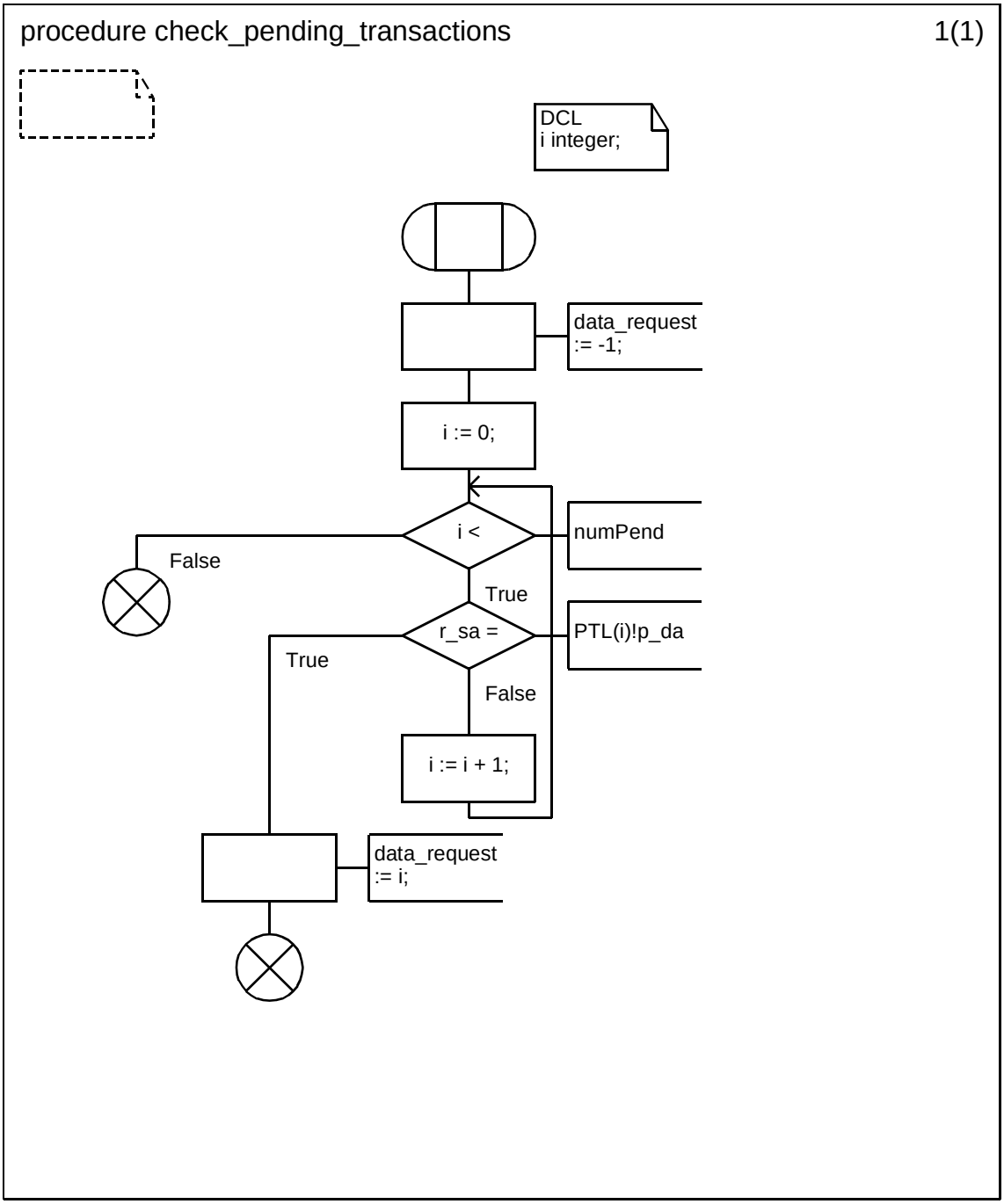


Copyright © 2003 IEEE. All rights reserved.

Authorized licensed use limited to: IEEE - Staff. Downloaded on October 28,2024 at 20:20:02 UTC from IEEE Xplore. Restrictions apply.

INTEL-1011
U.S. Patent 8,219,129

**D.3.1.154.82.54 Procedure parse_coordinator_realignment (1)**

.

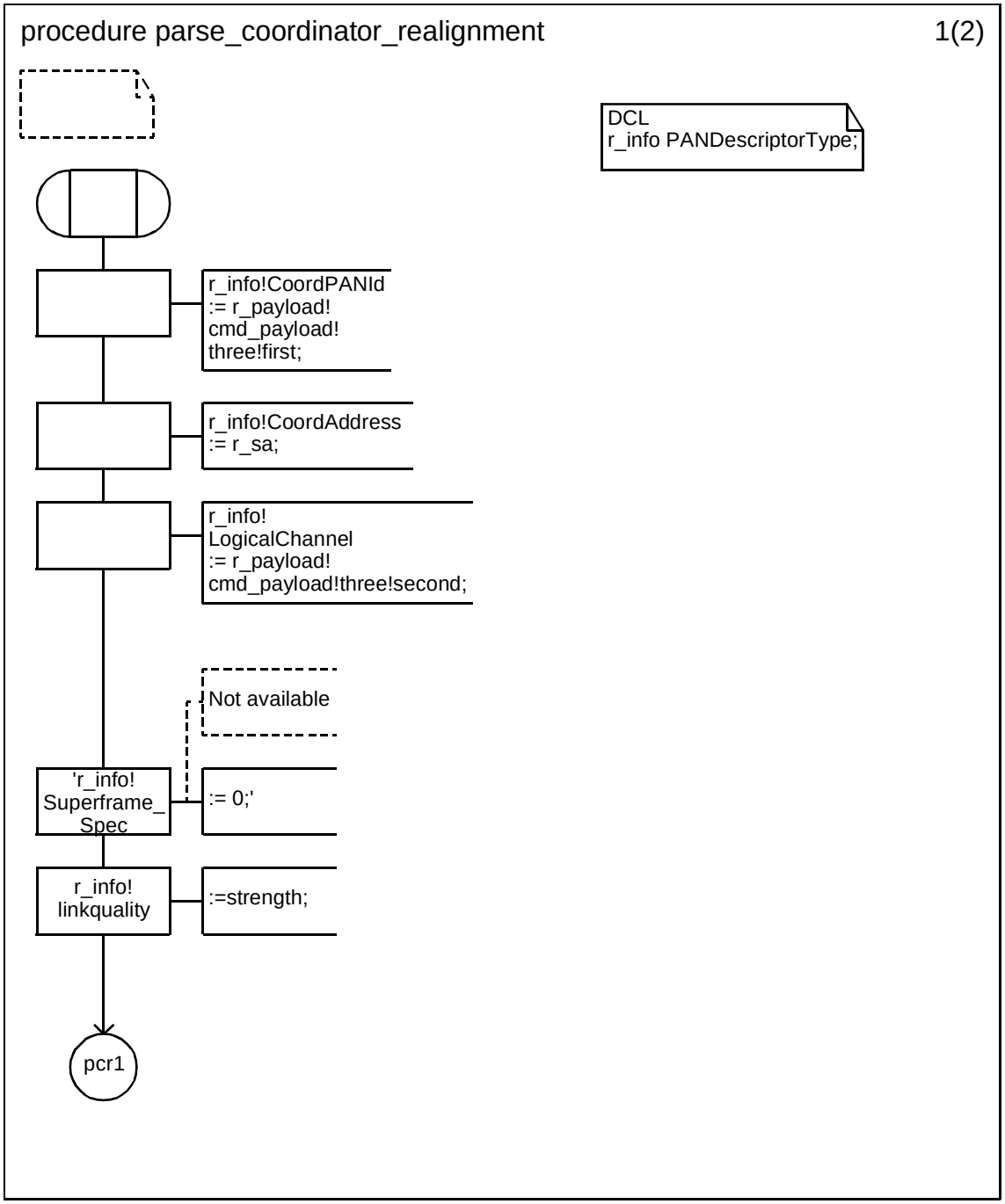



Copyright © 2003 IEEE. All rights reserved.
Authorized licensed use limited to: IEEE - Staff. Downloaded on October 28,2024 at 20:20:02 UTC from IEEE Xplore. Restrictions apply.

INTEL-1011
U.S. Patent 8,219,129

**D.3.1.154.82.55 Procedure parse_coordinator_realignment (2)**

.

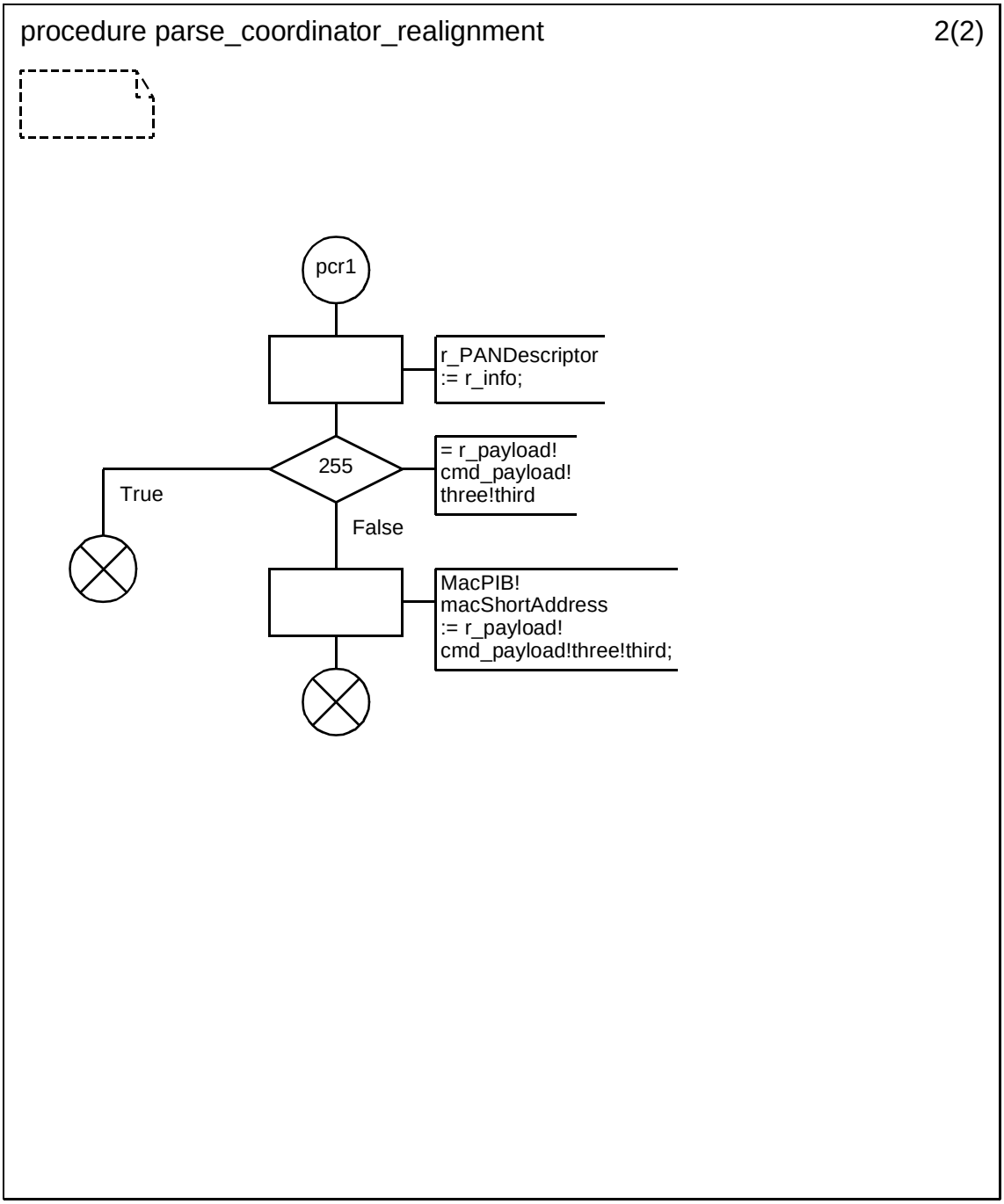


Copyright © 2003 IEEE. All rights reserved.

Authorized licensed use limited to: IEEE - Staff. Downloaded on October 28,2024 at 20:20:02 UTC from IEEE Xplore. Restrictions apply.

INTEL-1011
U.S. Patent 8,219,129

**D.3.1.154.82.56 Procedure check_GTS_availability (1)**

.

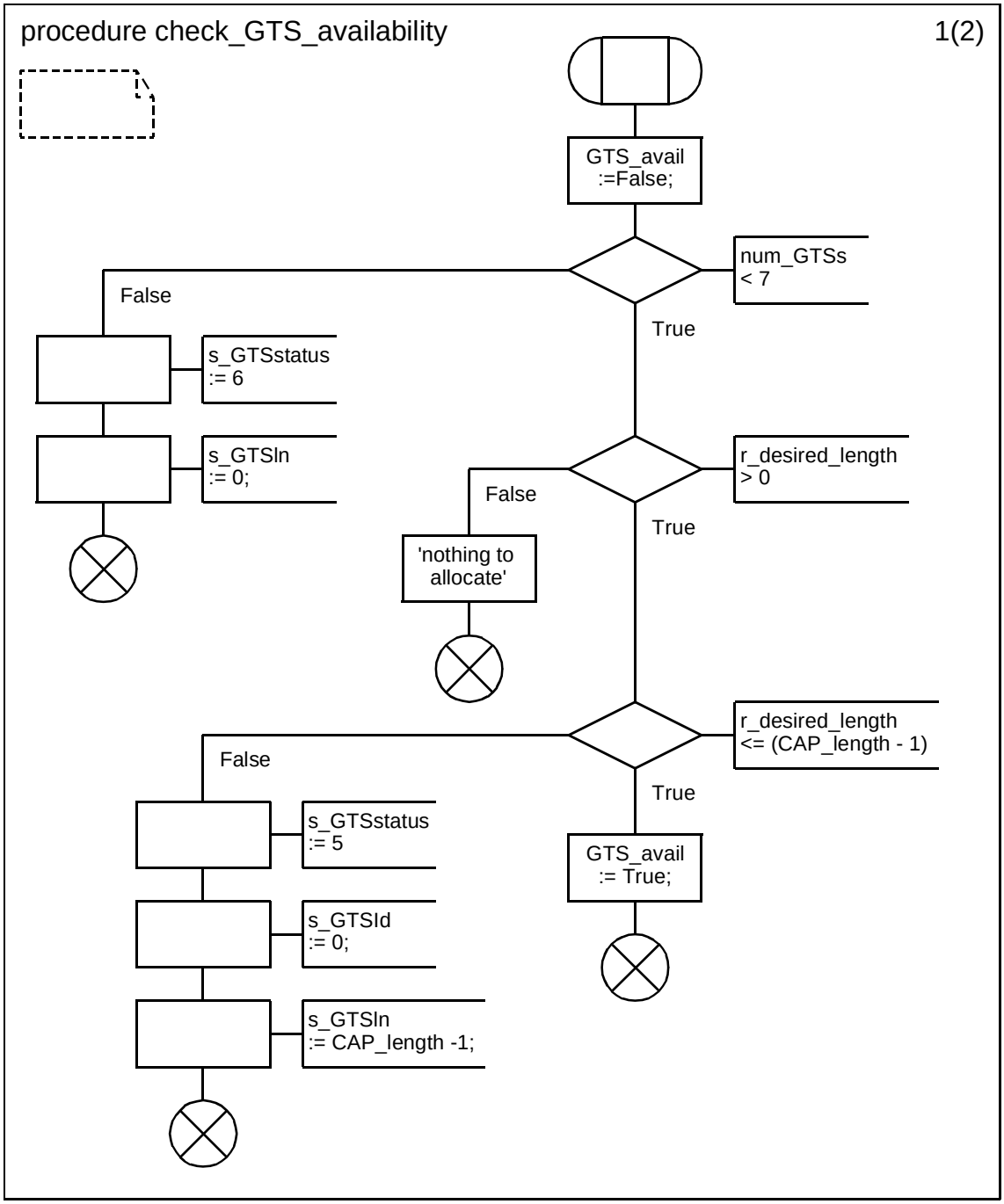



Copyright © 2003 IEEE. All rights reserved.
Authorized licensed use limited to: IEEE - Staff. Downloaded on October 28,2024 at 20:20:02 UTC from IEEE Xplore. Restrictions apply.

INTEL-1011
U.S. Patent 8,219,129

**D.3.1.154.82.57 Procedure check_GTS_availability (2)**

.

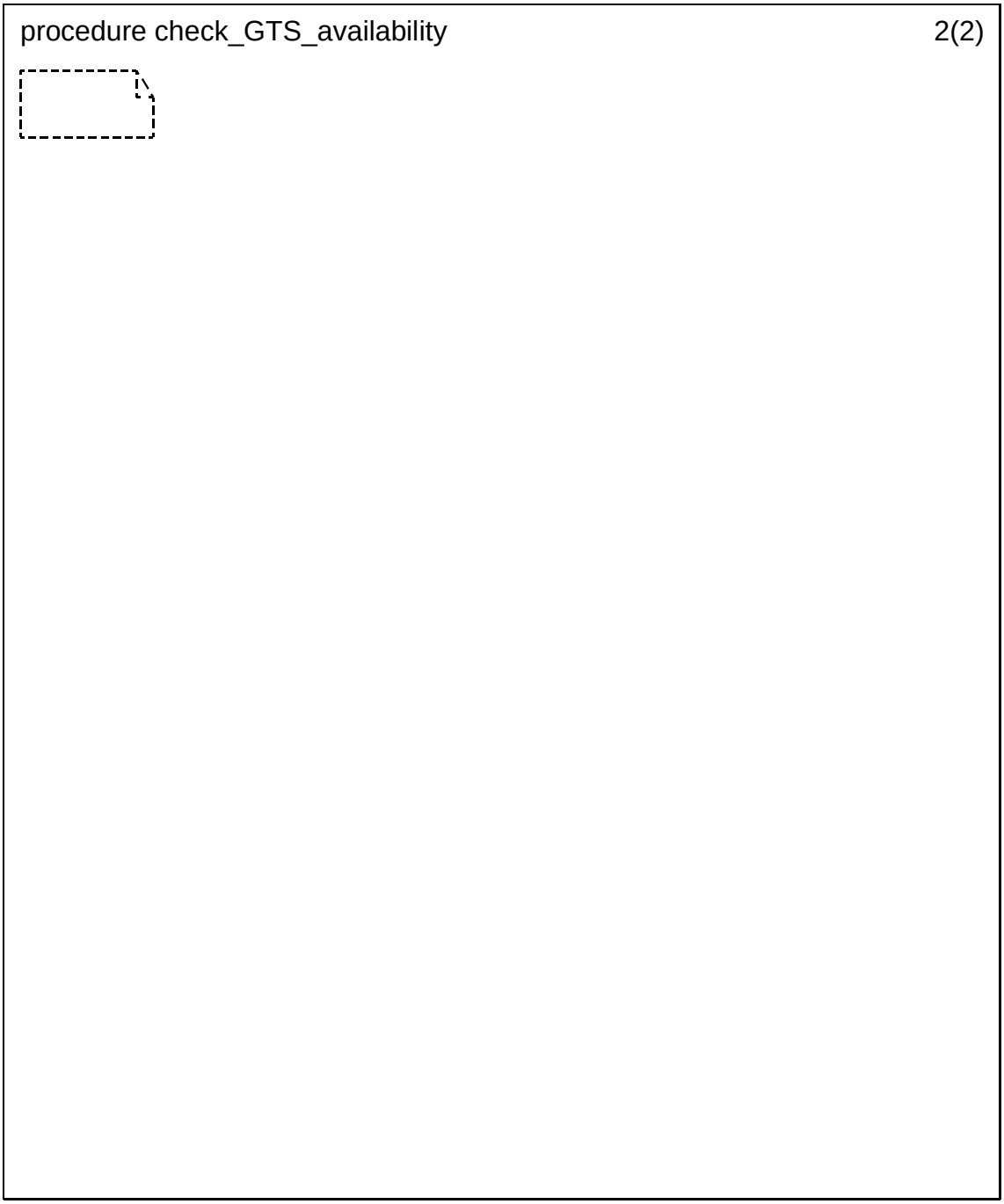


Copyright © 2003 IEEE. All rights reserved.

Authorized licensed use limited to: IEEE - Staff. Downloaded on October 28,2024 at 20:20:02 UTC from IEEE Xplore. Restrictions apply.

INTEL-1011
U.S. Patent 8,219,129

### D.3.1.154.82.58 Procedure delete_GTS

.

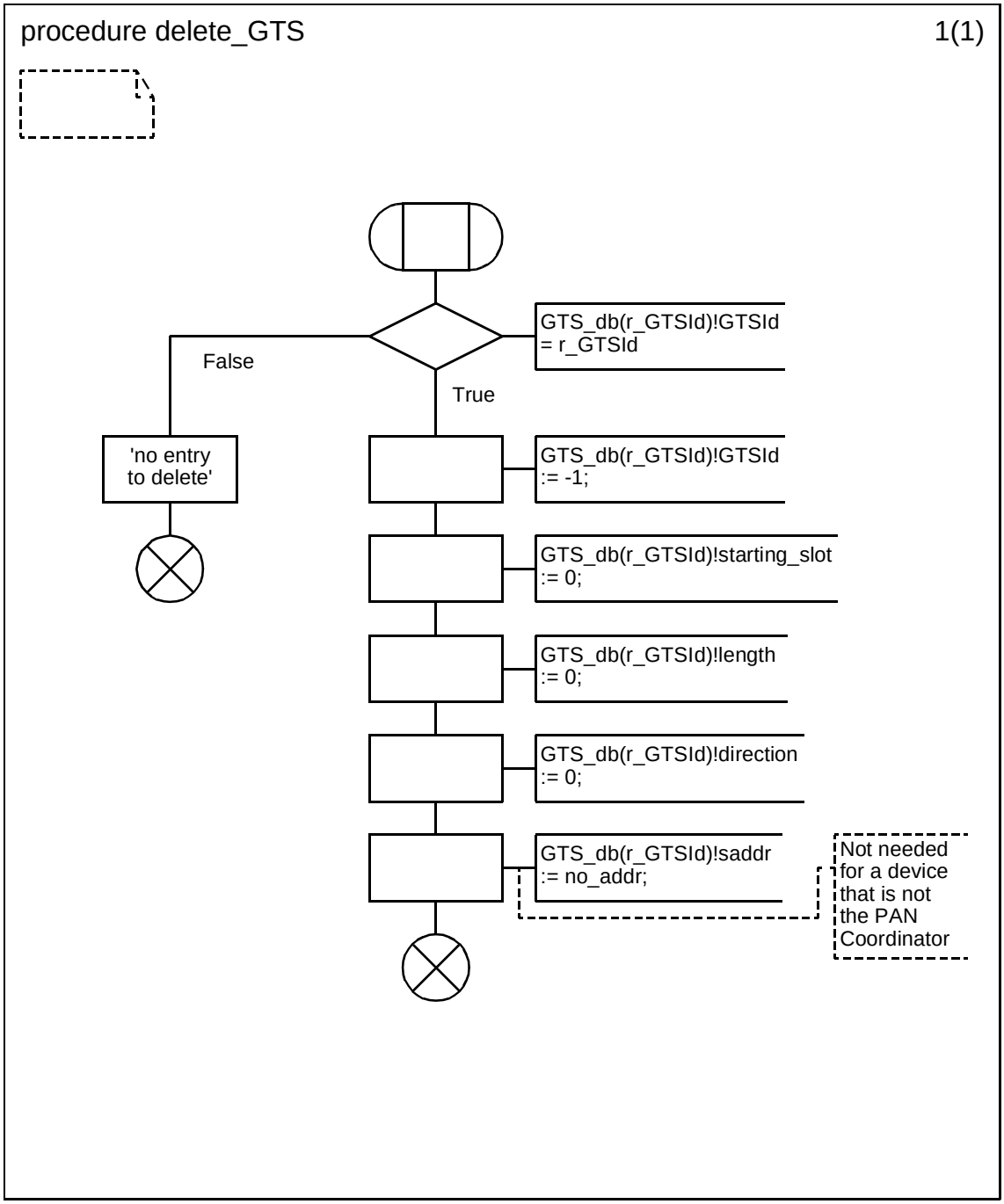



Copyright © 2003 IEEE. All rights reserved.
Authorized licensed use limited to: IEEE - Staff. Downloaded on October 28,2024 at 20:20:02 UTC from IEEE Xplore. Restrictions apply.

INTEL-1011
U.S. Patent 8,219,129

### D.3.1.154.82.59 Procedure store_GTS_info

.

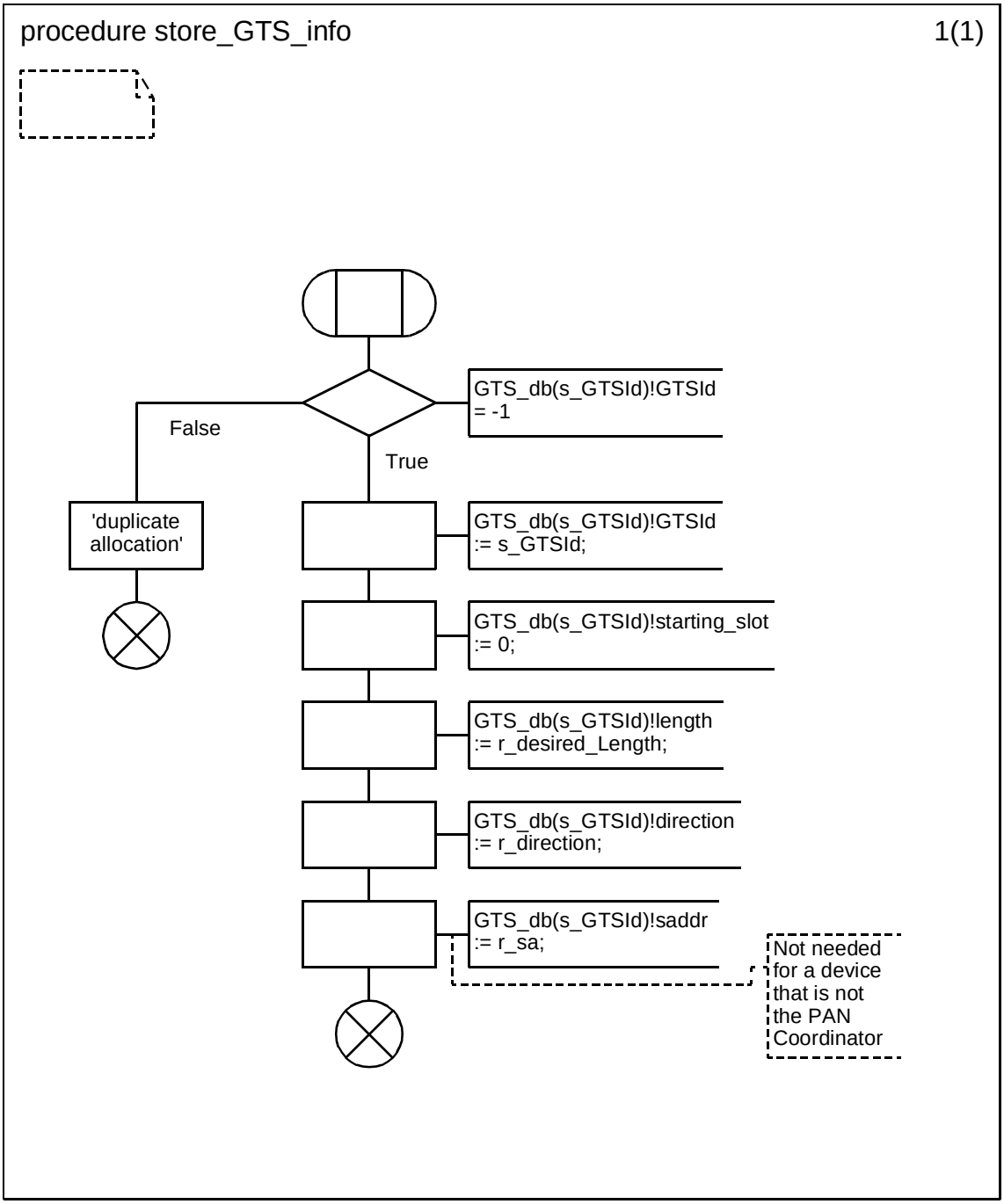


Copyright © 2003 IEEE. All rights reserved.

Authorized licensed use limited to: IEEE - Staff. Downloaded on October 28,2024 at 20:20:02 UTC from IEEE Xplore. Restrictions apply.

INTEL-1011
U.S. Patent 8,219,129

### D.3.1.154.82.60 Procedure parse_acknowledgement

.

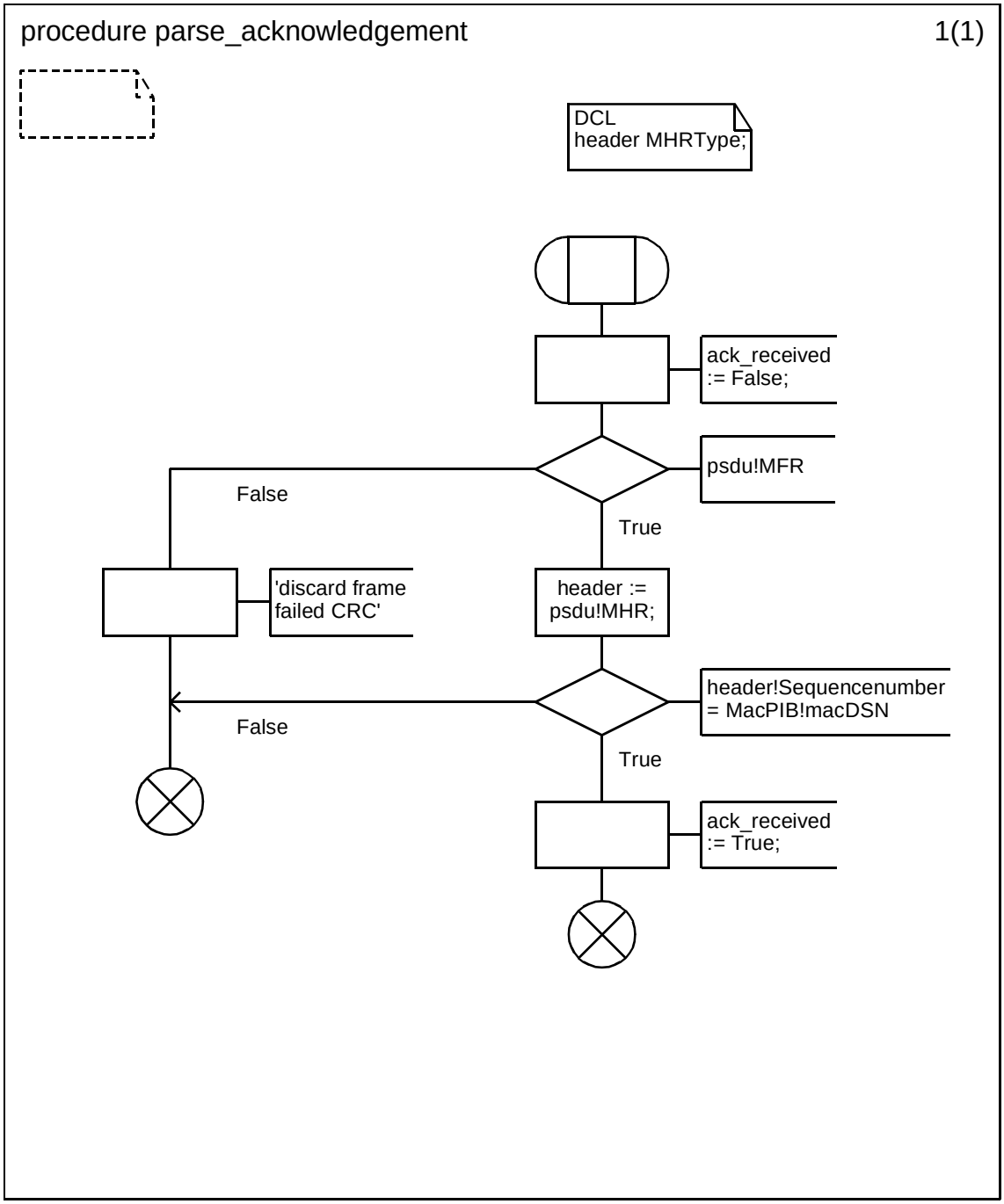



Copyright © 2003 IEEE. All rights reserved.
Authorized licensed use limited to: IEEE - Staff. Downloaded on October 28,2024 at 20:20:02 UTC from IEEE Xplore. Restrictions apply.

INTEL-1011
U.S. Patent 8,219,129

### D.3.1.154.83 Procedure init_for_scan

.

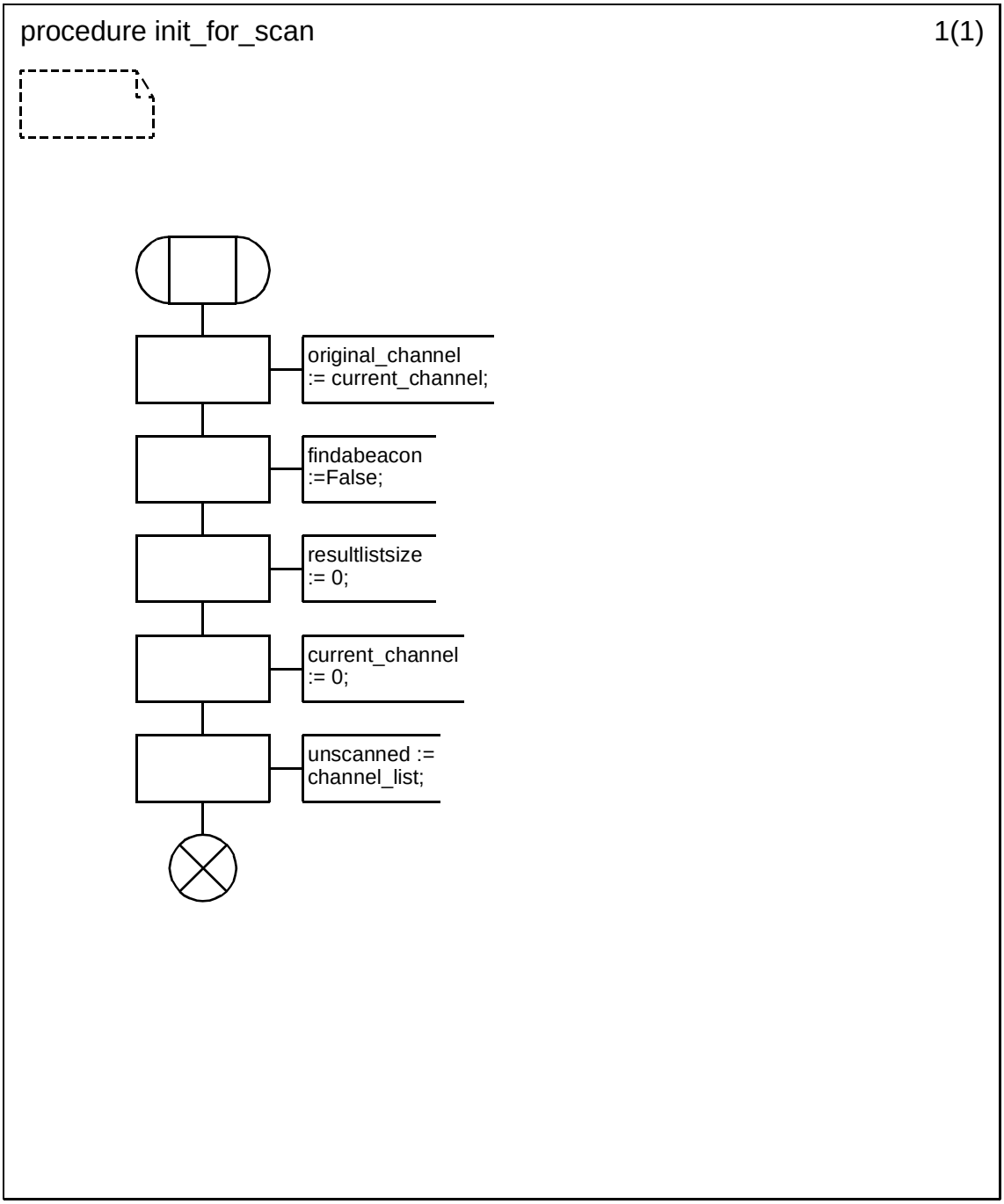


Copyright © 2003 IEEE. All rights reserved.

Authorized licensed use limited to: IEEE - Staff. Downloaded on October 28,2024 at 20:20:02 UTC from IEEE Xplore. Restrictions apply.

INTEL-1011
U.S. Patent 8,219,129

### D.3.1.154.84 Procedure init_CSMA_CA

.

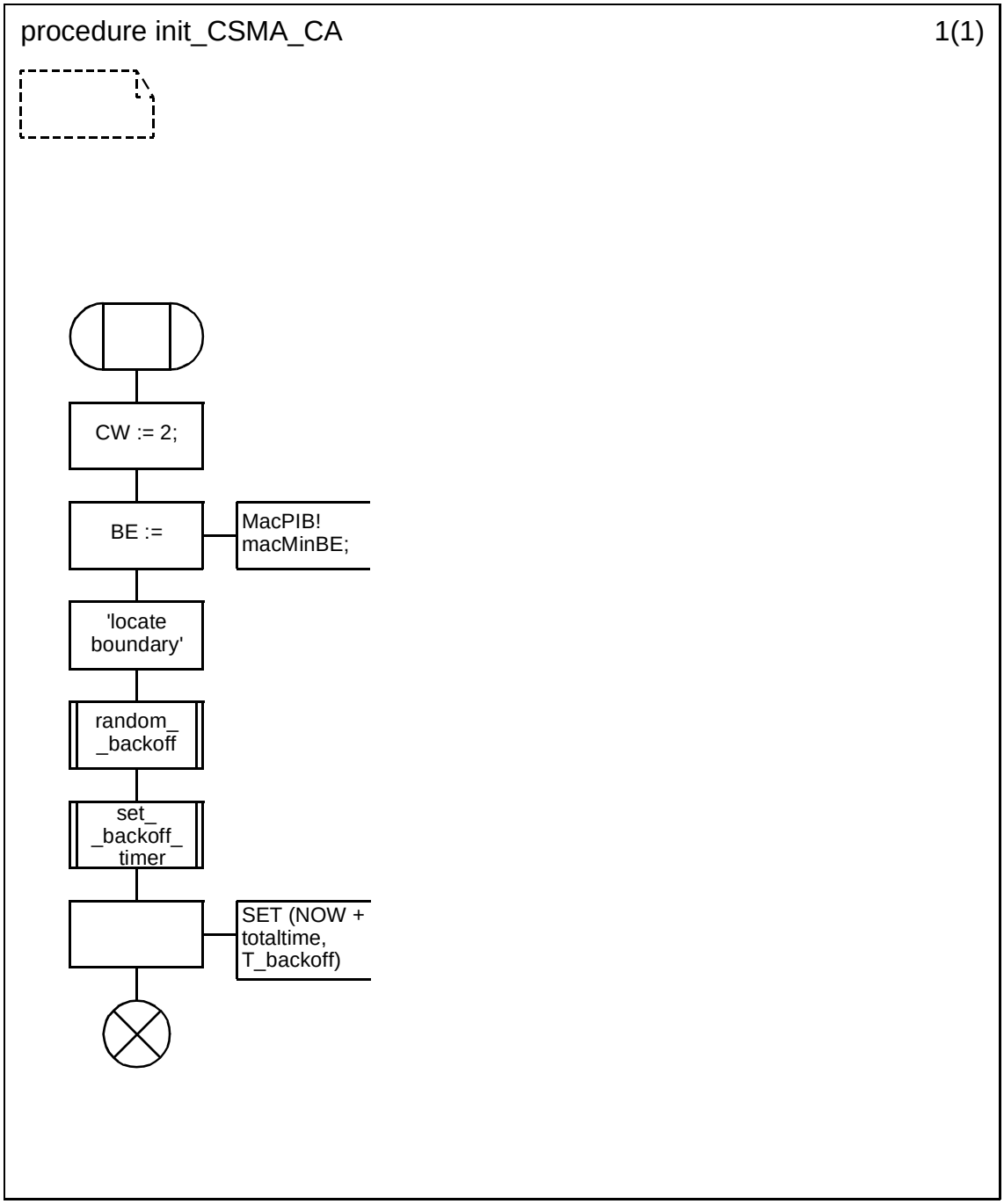



Copyright © 2003 IEEE. All rights reserved.
Authorized licensed use limited to: IEEE - Staff. Downloaded on October 28,2024 at 20:20:02 UTC from IEEE Xplore. Restrictions apply.

INTEL-1011
U.S. Patent 8,219,129

### D.3.1.154.85 Procedure increment_MacBSN

.

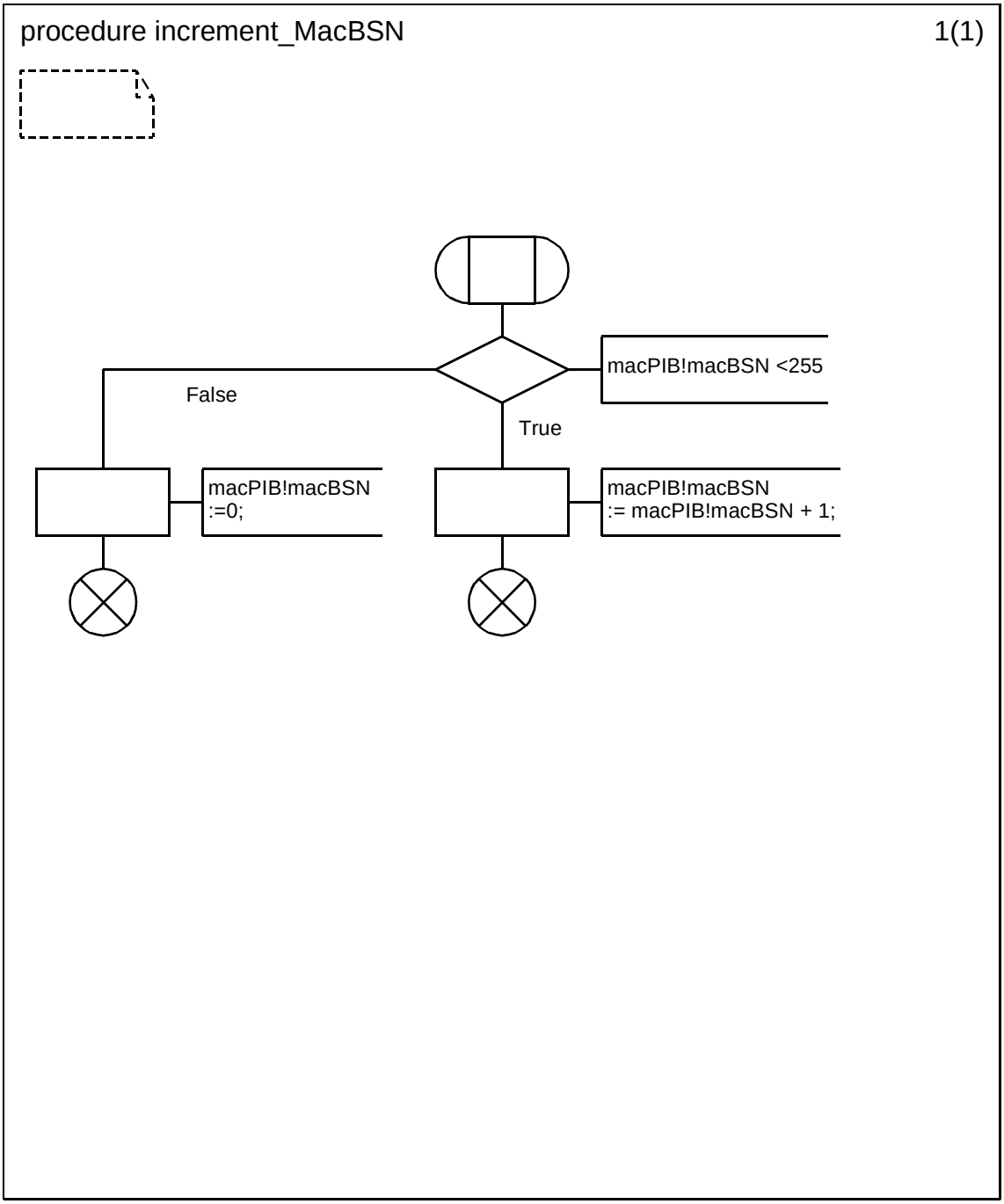


Copyright © 2003 IEEE. All rights reserved.

Authorized licensed use limited to: IEEE - Staff. Downloaded on October 28,2024 at 20:20:02 UTC from IEEE Xplore. Restrictions apply.

INTEL-1011
U.S. Patent 8,219,129

### D.3.1.154.86 Procedure increment_MacDSN

.

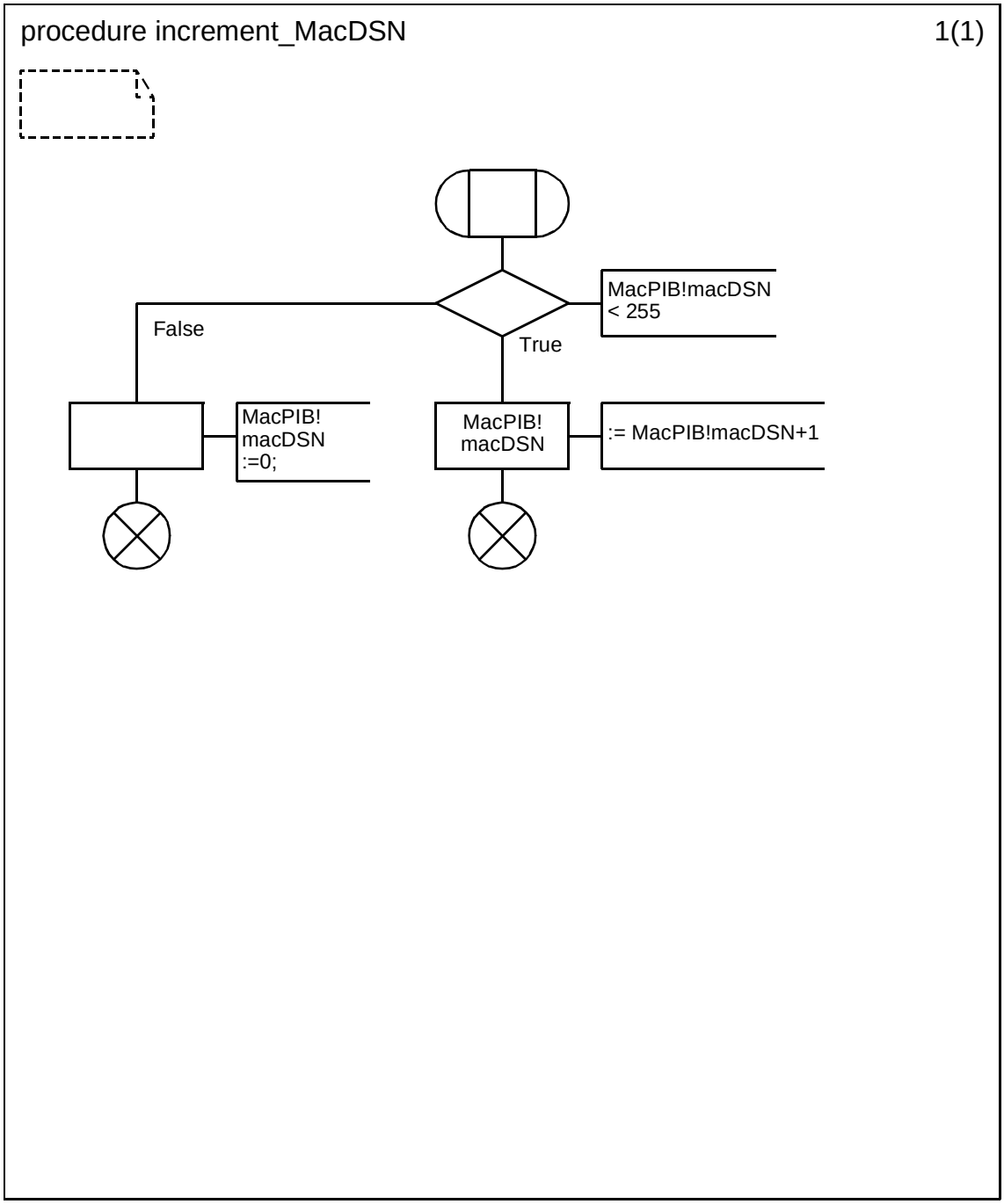



Copyright © 2003 IEEE. All rights reserved.
Authorized licensed use limited to: IEEE - Staff. Downloaded on October 28,2024 at 20:20:02 UTC from IEEE Xplore. Restrictions apply.

INTEL-1011
U.S. Patent 8,219,129

**D.3.1.154.87 Procedure get_MACPIB (1)**

.

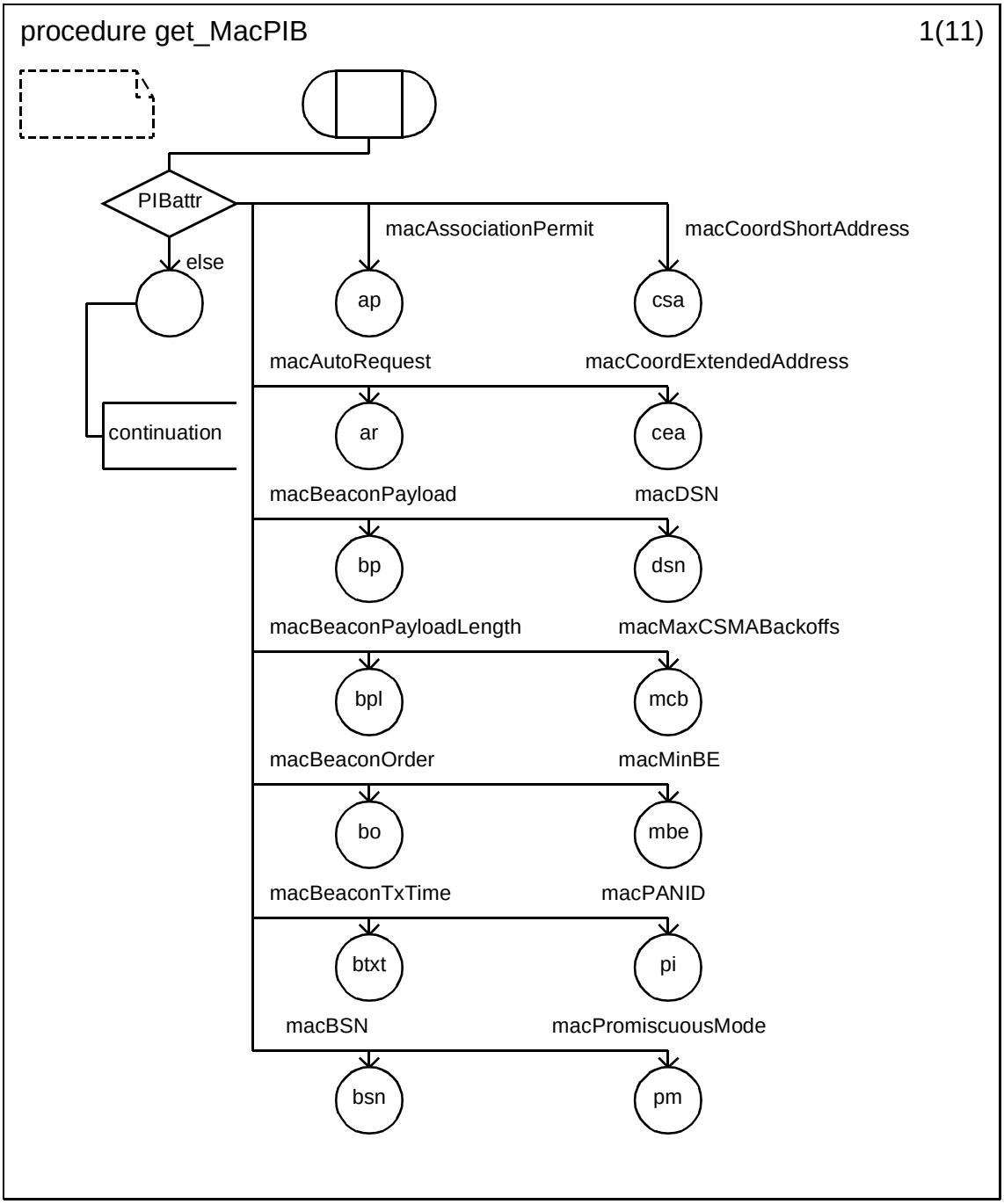


Copyright © 2003 IEEE. All rights reserved.

Authorized licensed use limited to: IEEE - Staff. Downloaded on October 28,2024 at 20:20:02 UTC from IEEE Xplore. Restrictions apply.

INTEL-1011
U.S. Patent 8,219,129

**D.3.1.154.88 Procedure get_MACPIB (2)**

.

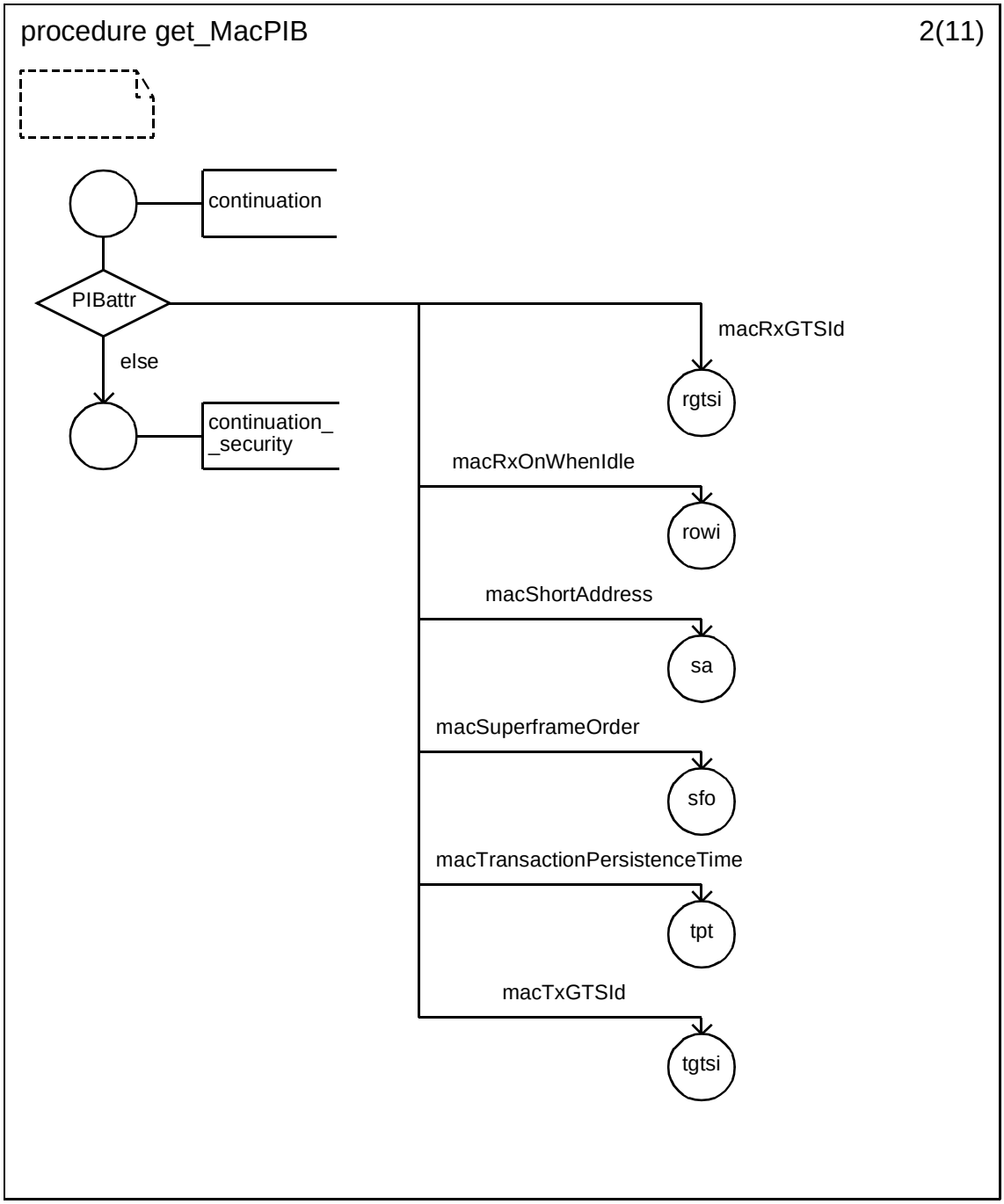



Copyright © 2003 IEEE. All rights reserved.
Authorized licensed use limited to: IEEE - Staff. Downloaded on October 28,2024 at 20:20:02 UTC from IEEE Xplore. Restrictions apply.

INTEL-1011
U.S. Patent 8,219,129

### D.3.1.154.89 Procedure get_MACPIB (3)

.

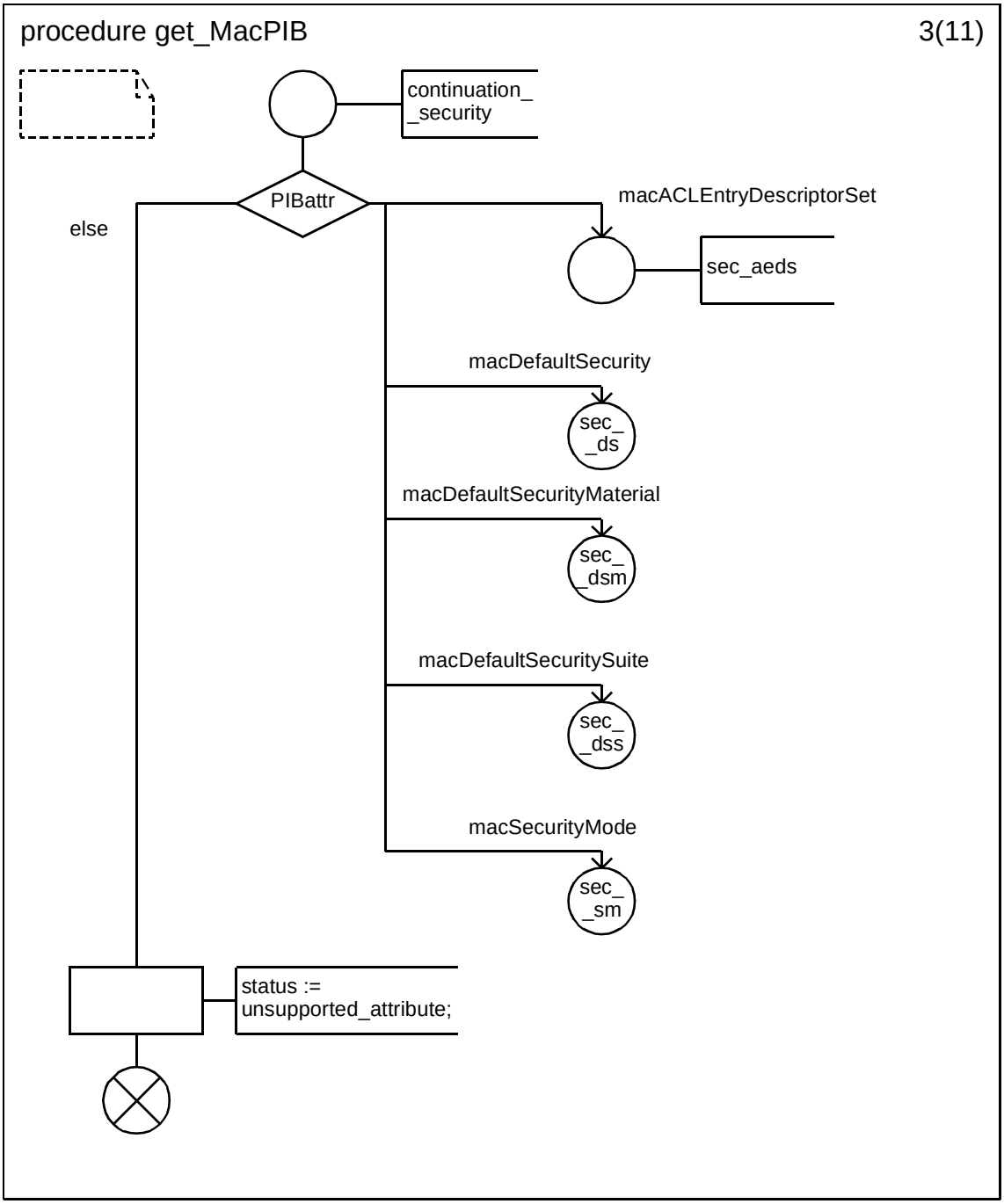


Copyright © 2003 IEEE. All rights reserved.

Authorized licensed use limited to: IEEE - Staff. Downloaded on October 28,2024 at 20:20:02 UTC from IEEE Xplore. Restrictions apply.

INTEL-1011
U.S. Patent 8,219,129

**D.3.1.154.90 Procedure get_MACPIB (4)**

.

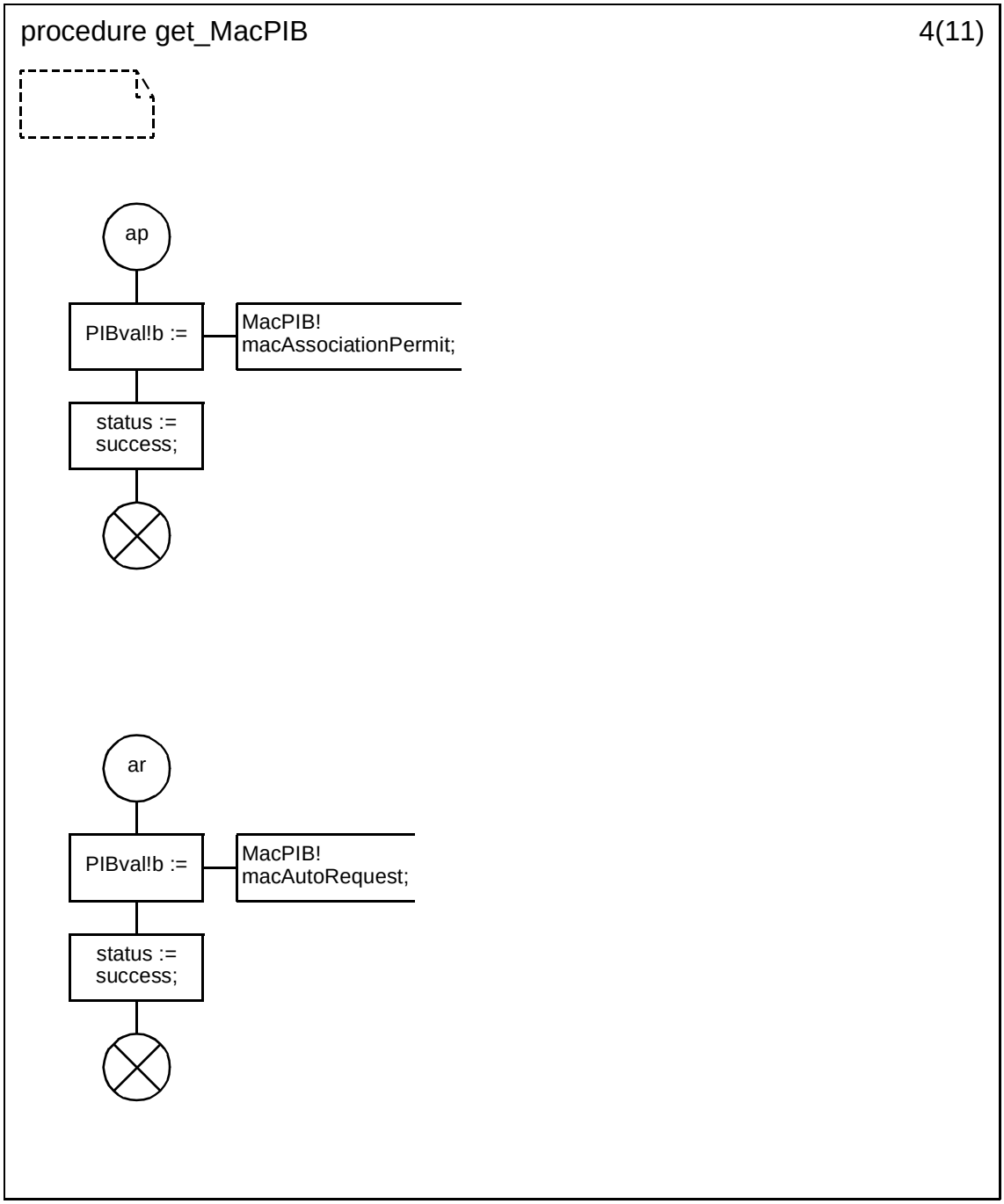



Copyright © 2003 IEEE. All rights reserved.
Authorized licensed use limited to: IEEE - Staff. Downloaded on October 28,2024 at 20:20:02 UTC from IEEE Xplore. Restrictions apply.

INTEL-1011
U.S. Patent 8,219,129

### D.3.1.154.91 Procedure get_MACPIB (5)

.

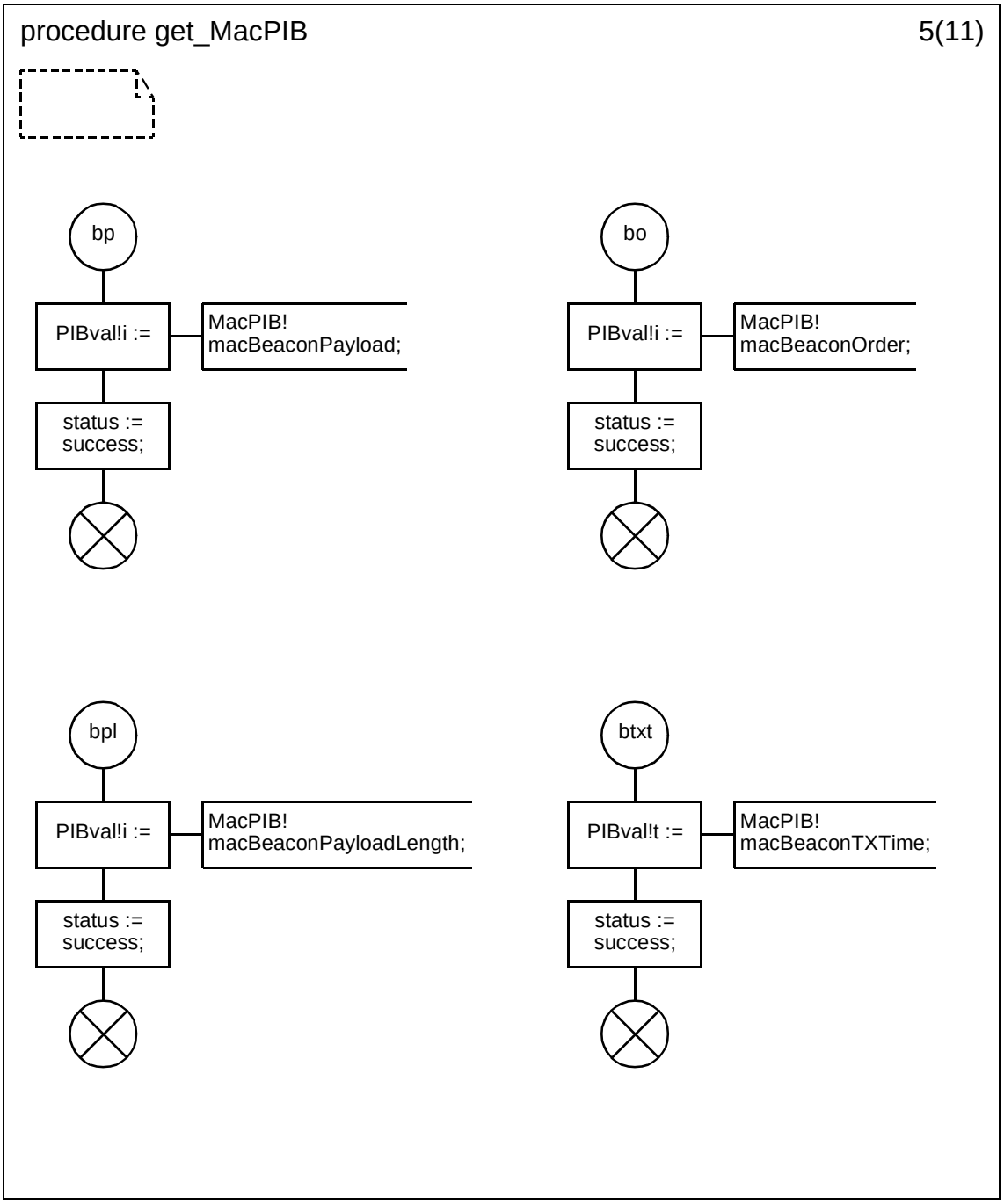


Copyright © 2003 IEEE. All rights reserved.

Authorized licensed use limited to: IEEE - Staff. Downloaded on October 28,2024 at 20:20:02 UTC from IEEE Xplore. Restrictions apply.

INTEL-1011
U.S. Patent 8,219,129

**D.3.1.154.92 Procedure get_MACPIB (6)**

.

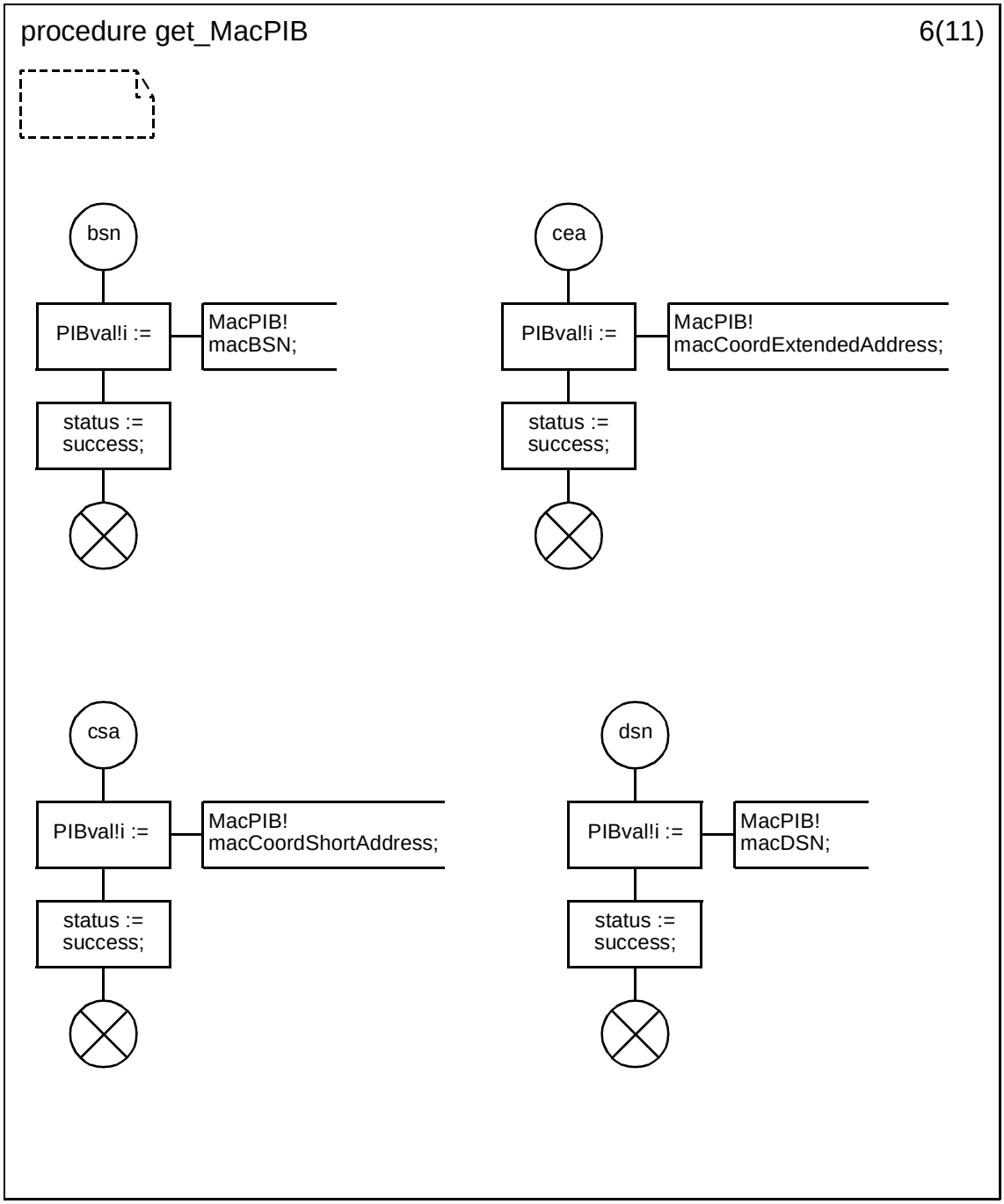



Copyright © 2003 IEEE. All rights reserved.
Authorized licensed use limited to: IEEE - Staff. Downloaded on October 28,2024 at 20:20:02 UTC from IEEE Xplore. Restrictions apply.

INTEL-1011
U.S. Patent 8,219,129

### D.3.1.154.93 Procedure get_MACPIB (7)

.

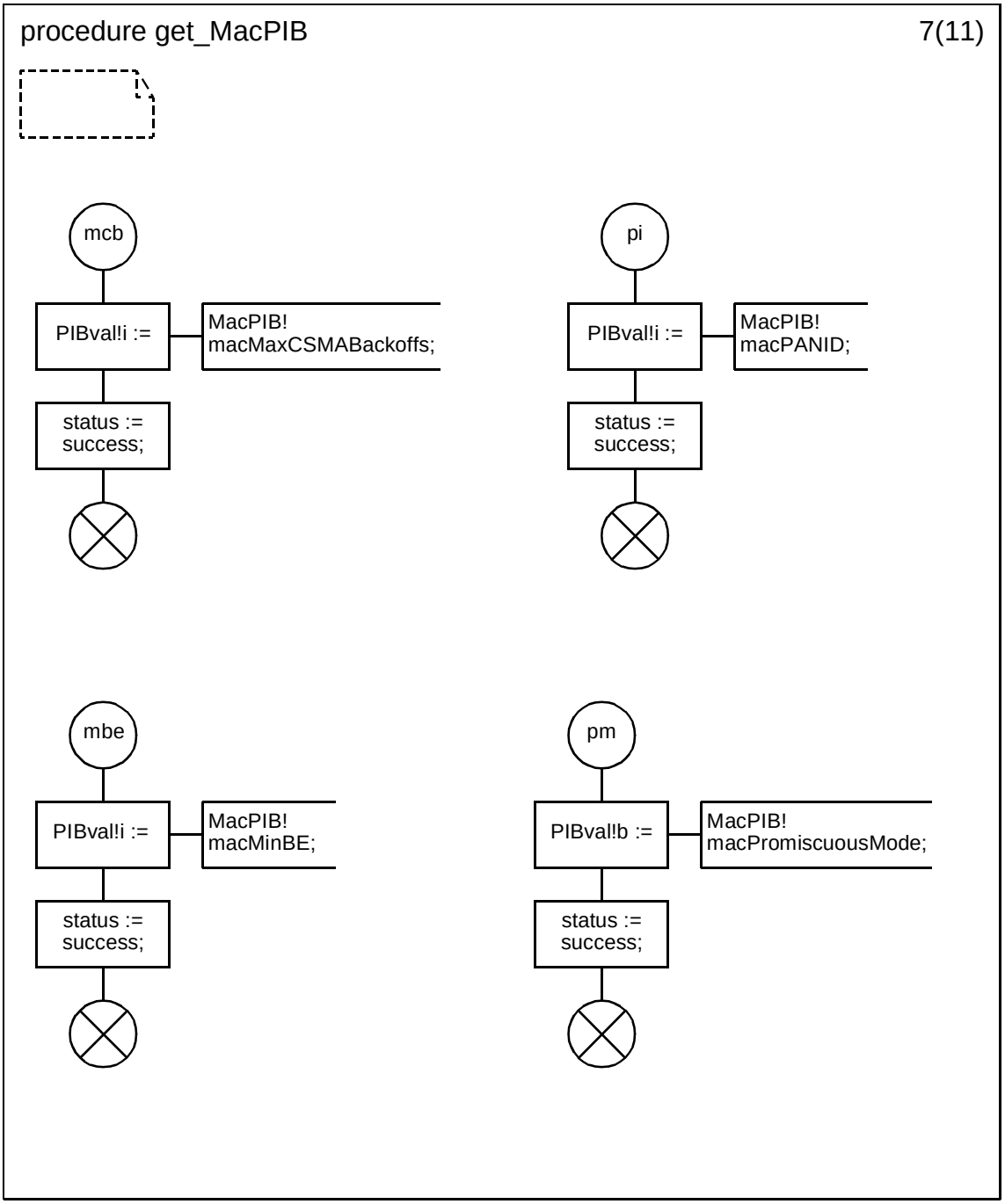


Copyright © 2003 IEEE. All rights reserved.

Authorized licensed use limited to: IEEE - Staff. Downloaded on October 28,2024 at 20:20:02 UTC from IEEE Xplore. Restrictions apply.

INTEL-1011
U.S. Patent 8,219,129

### D.3.1.154.94 Procedure get_MACPIB (8)

.

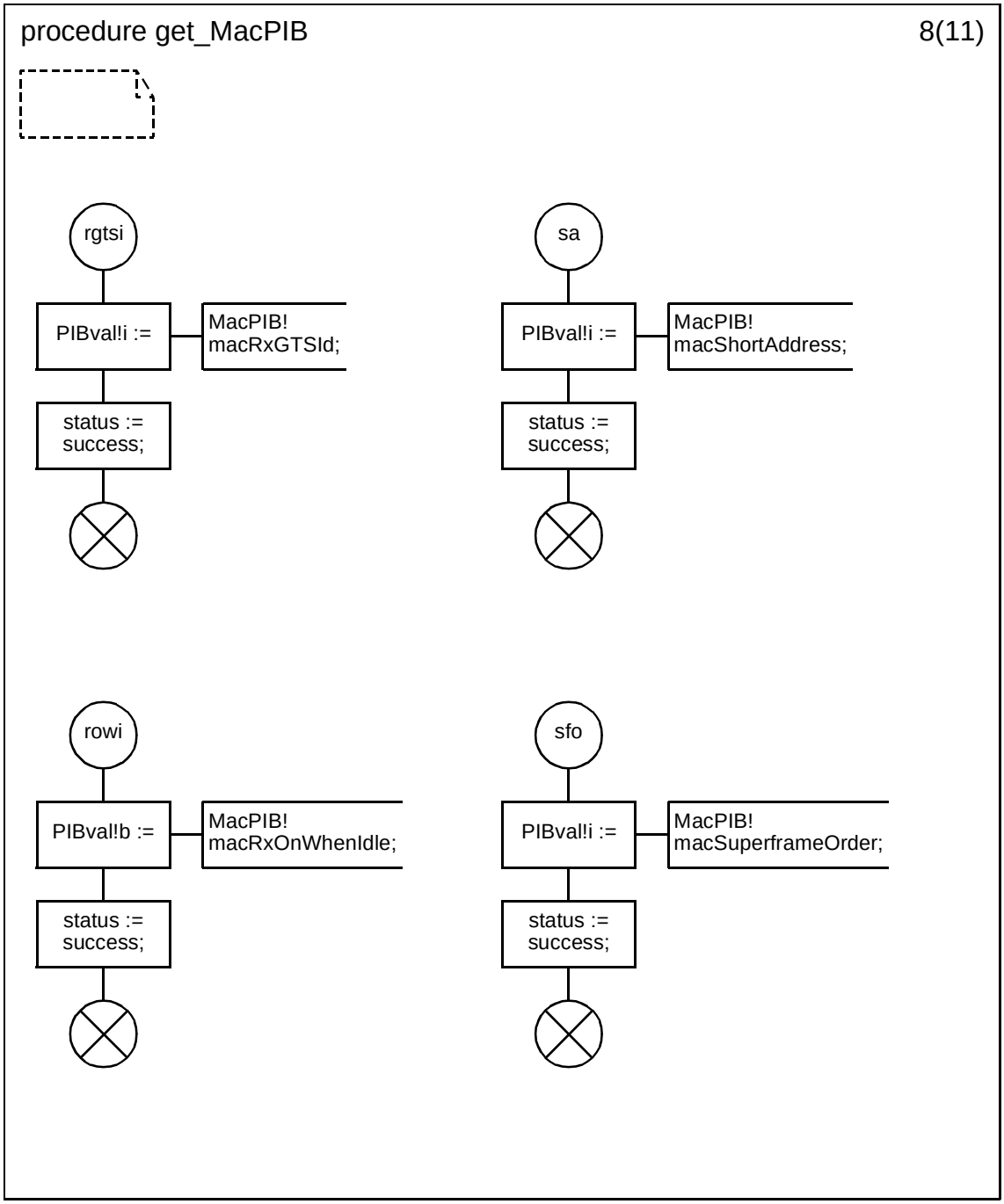



Copyright © 2003 IEEE. All rights reserved.
Authorized licensed use limited to: IEEE - Staff. Downloaded on October 28,2024 at 20:20:02 UTC from IEEE Xplore. Restrictions apply.

INTEL-1011
U.S. Patent 8,219,129

### D.3.1.154.95 Procedure get_MACPIB (9)

.

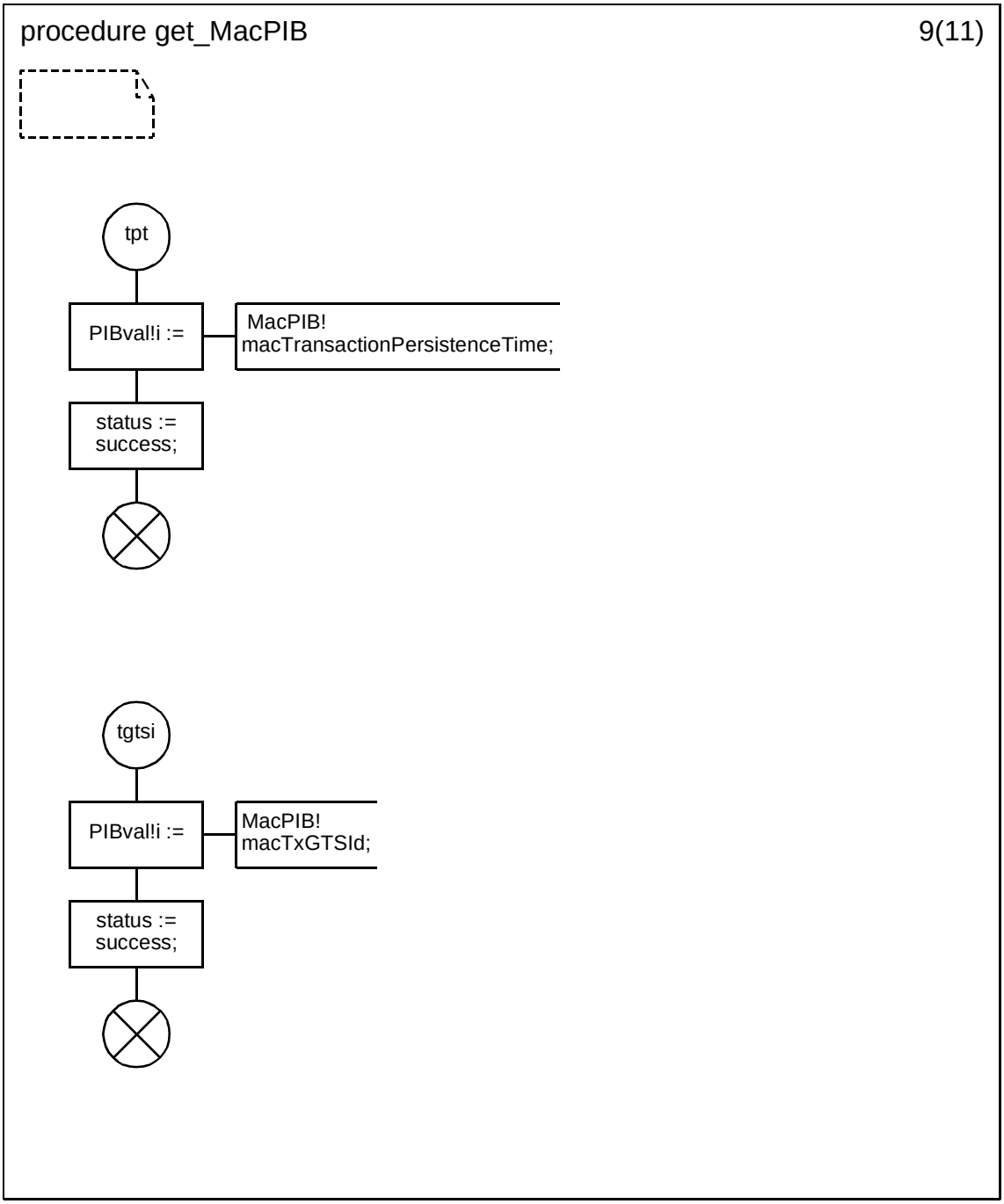


Copyright © 2003 IEEE. All rights reserved.

Authorized licensed use limited to: IEEE - Staff. Downloaded on October 28,2024 at 20:20:02 UTC from IEEE Xplore. Restrictions apply.

INTEL-1011
U.S. Patent 8,219,129

**D.3.1.154.96 Procedure get_MACPIB (10)**

.

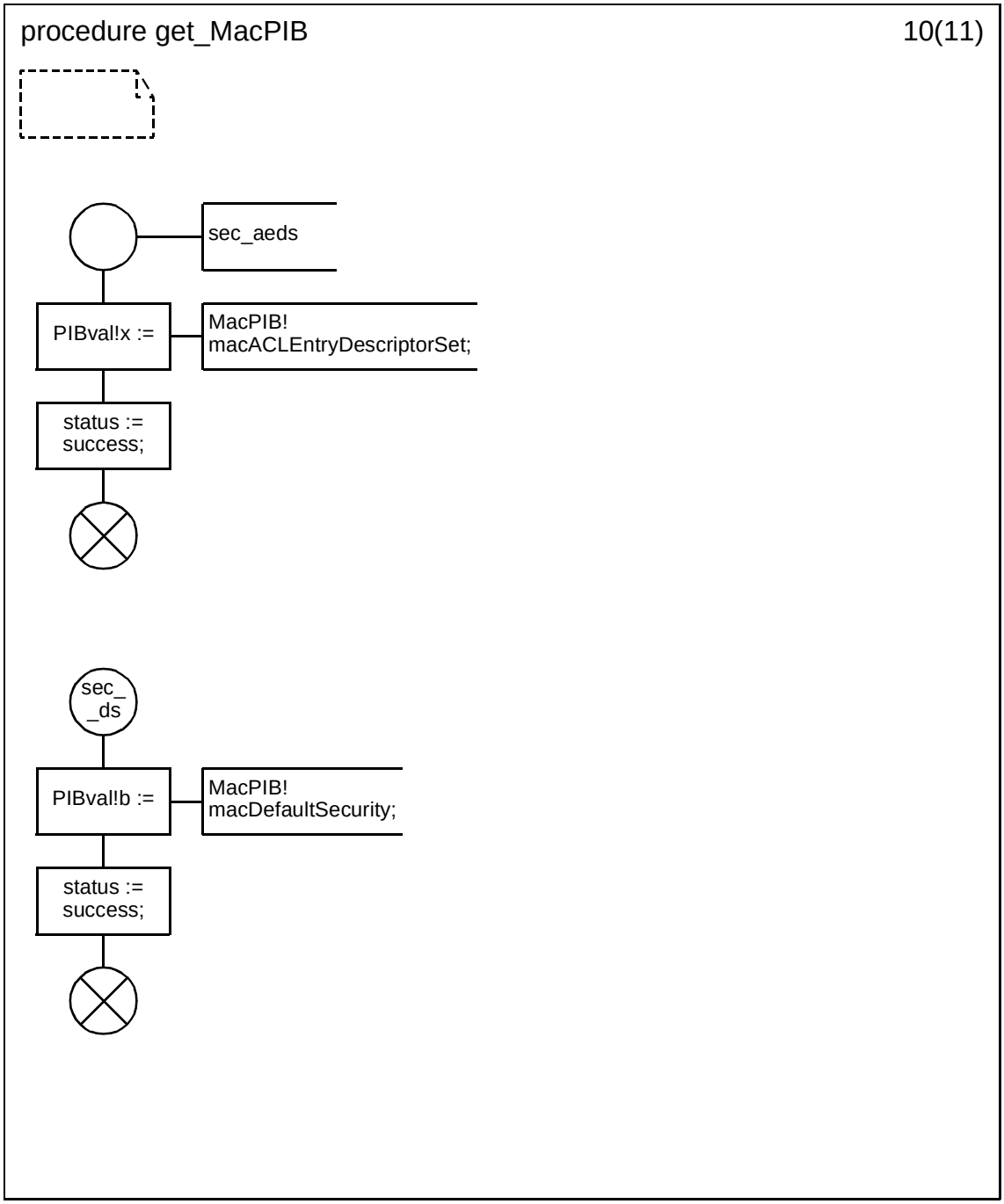



Copyright © 2003 IEEE. All rights reserved.
Authorized licensed use limited to: IEEE - Staff. Downloaded on October 28,2024 at 20:20:02 UTC from IEEE Xplore. Restrictions apply.

INTEL-1011
U.S. Patent 8,219,129

**D.3.1.154.97 Procedure get_MACPIB (11)**

.

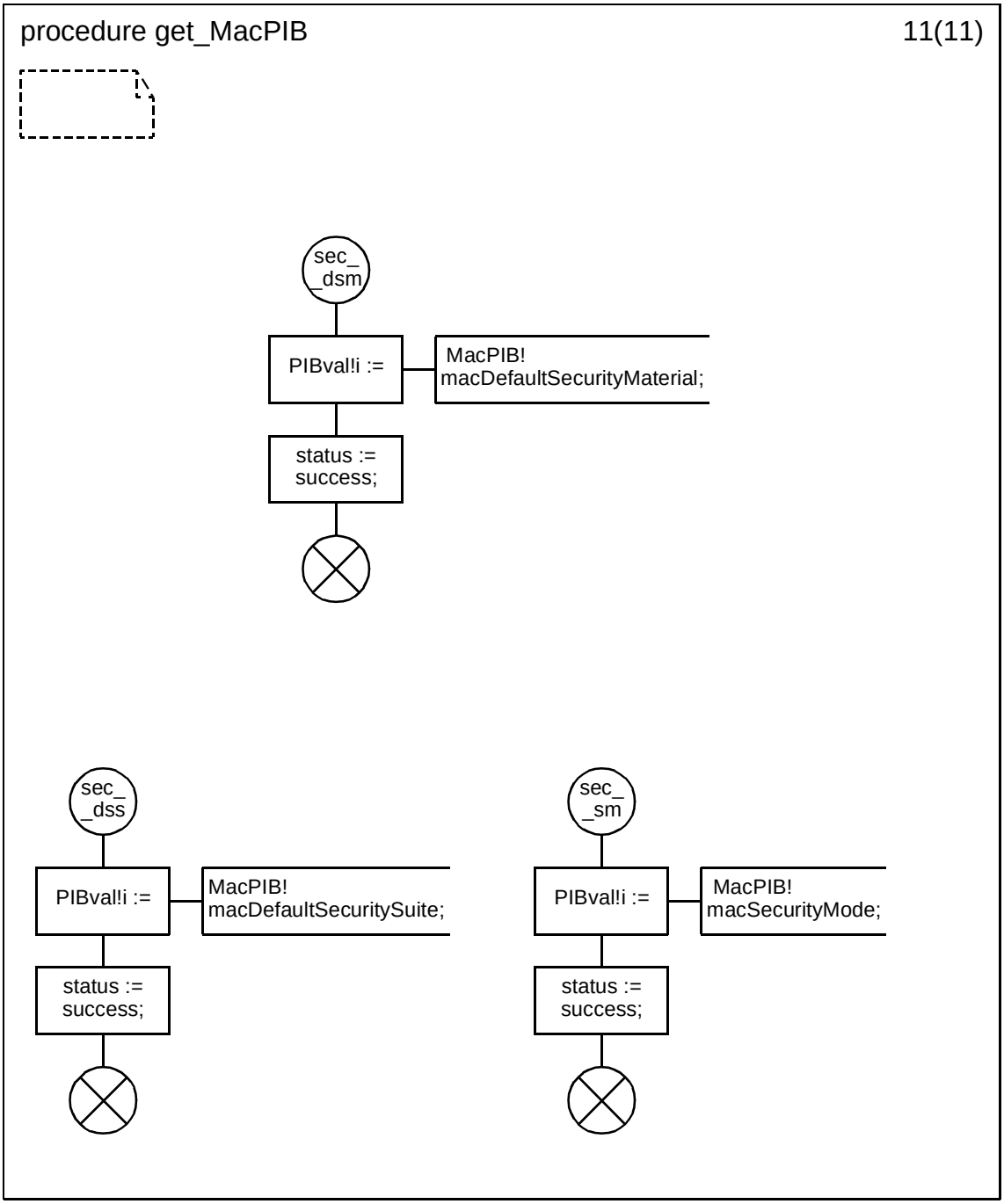


Copyright © 2003 IEEE. All rights reserved.

Authorized licensed use limited to: IEEE - Staff. Downloaded on October 28,2024 at 20:20:02 UTC from IEEE Xplore. Restrictions apply.

INTEL-1011
U.S. Patent 8,219,129

**D.3.1.154.98 Procedure set_MacPIB (1)**

.

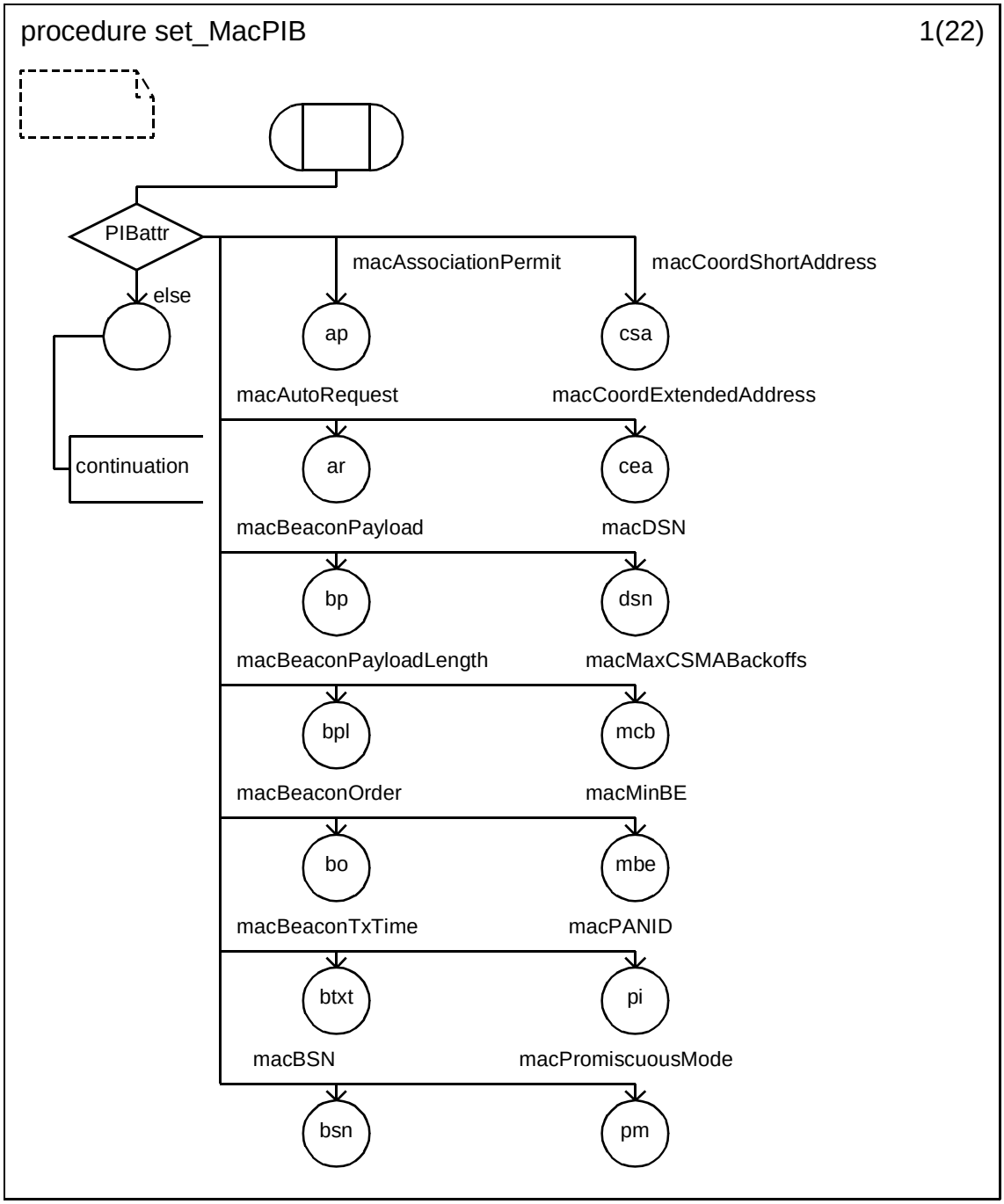



Copyright © 2003 IEEE. All rights reserved.
Authorized licensed use limited to: IEEE - Staff. Downloaded on October 28,2024 at 20:20:02 UTC from IEEE Xplore. Restrictions apply.

INTEL-1011
U.S. Patent 8,219,129

**D.3.1.154.99 Procedure set_MacPIB (2)**

.

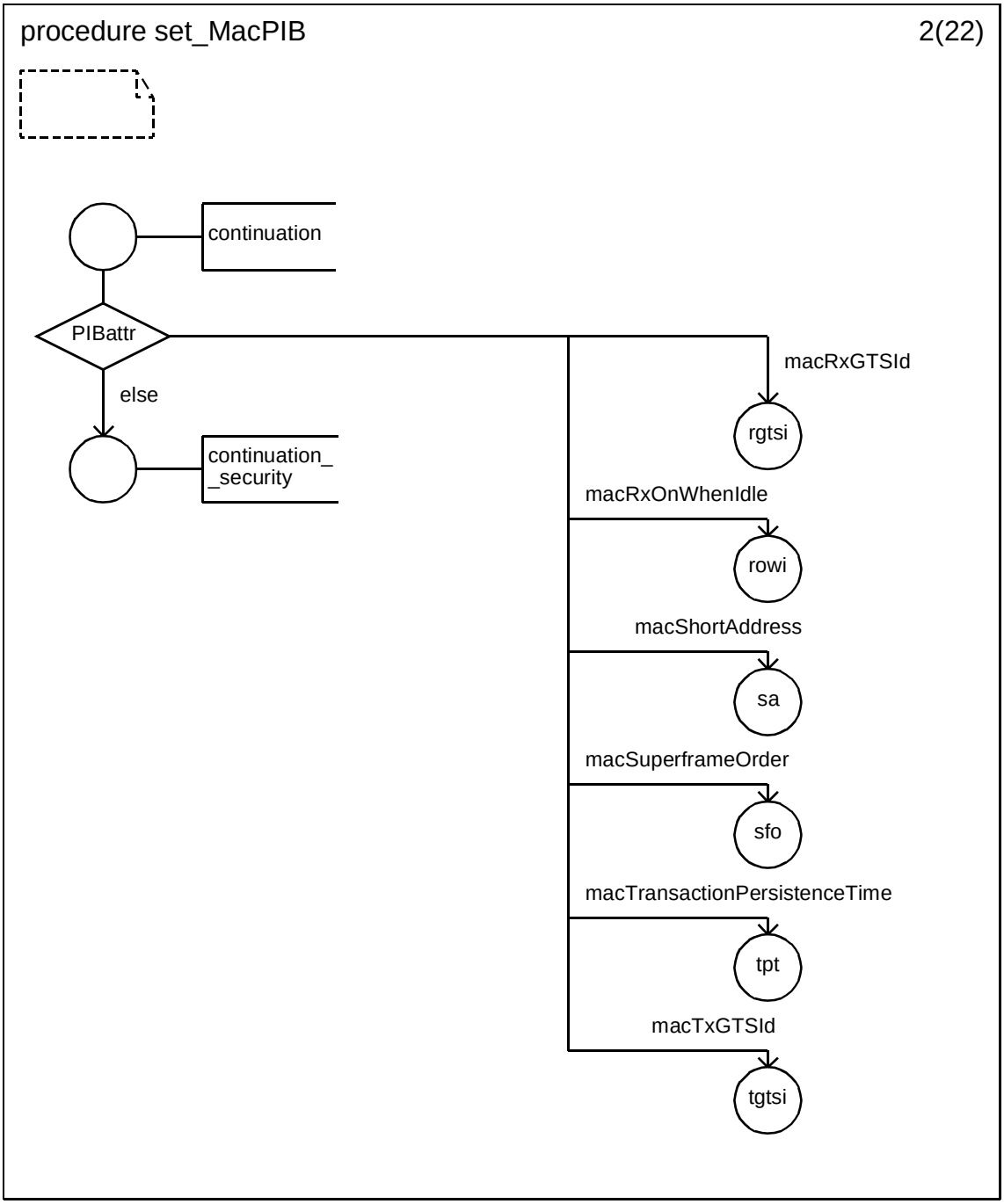


Copyright © 2003 IEEE. All rights reserved.

Authorized licensed use limited to: IEEE - Staff. Downloaded on October 28,2024 at 20:20:02 UTC from IEEE Xplore. Restrictions apply.

INTEL-1011
U.S. Patent 8,219,129

**D.3.1.154.100 Procedure set_MacPIB (3)**

.

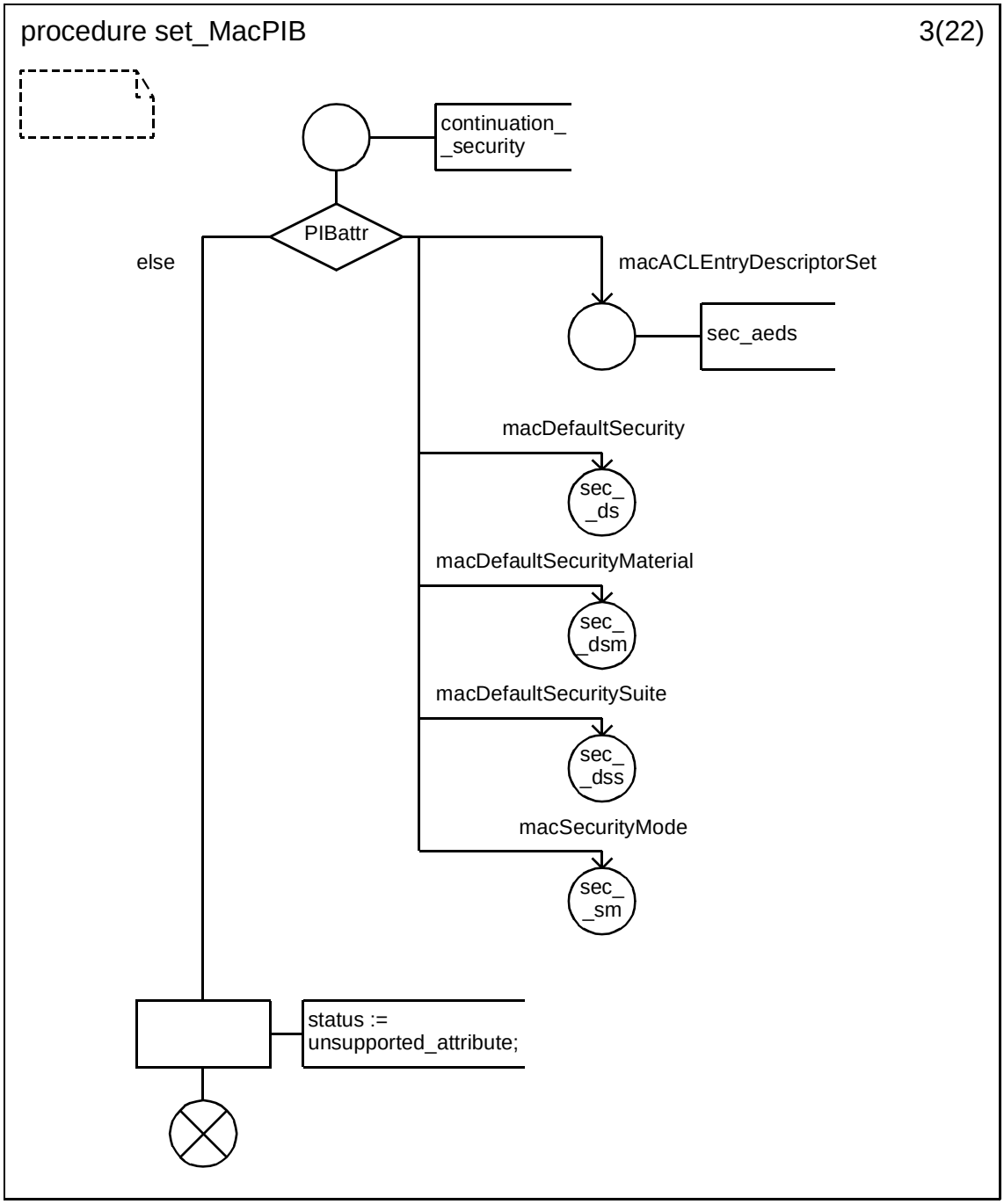



Copyright © 2003 IEEE. All rights reserved.
Authorized licensed use limited to: IEEE - Staff. Downloaded on October 28,2024 at 20:20:02 UTC from IEEE Xplore. Restrictions apply.

INTEL-1011
U.S. Patent 8,219,129

### D.3.1.154.101 Procedure set_MacPIB (4)

.

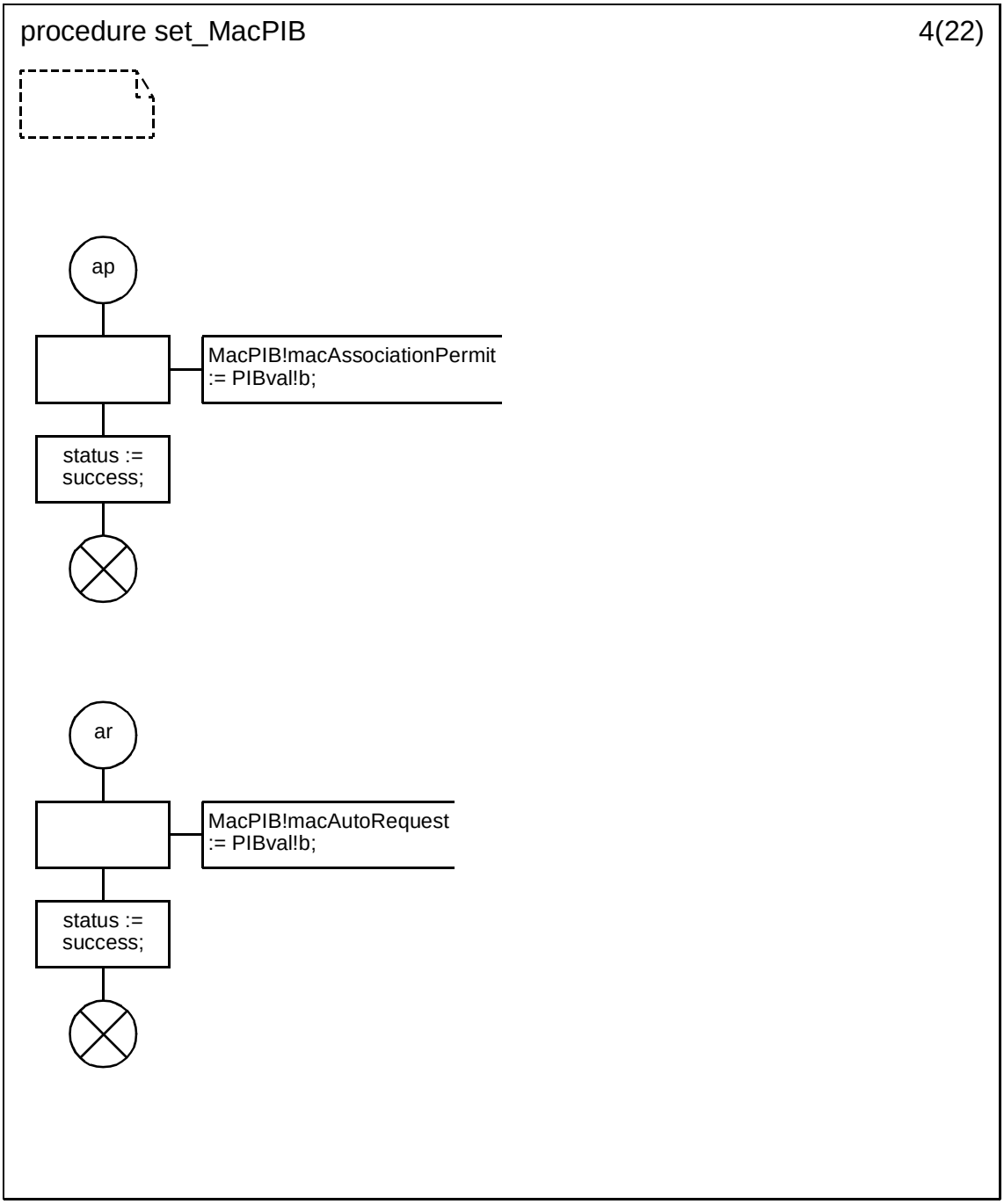


Copyright © 2003 IEEE. All rights reserved.

Authorized licensed use limited to: IEEE - Staff. Downloaded on October 28,2024 at 20:20:02 UTC from IEEE Xplore. Restrictions apply.

INTEL-1011
U.S. Patent 8,219,129

### D.3.1.154.102 Procedure set_MacPIB (5)

.

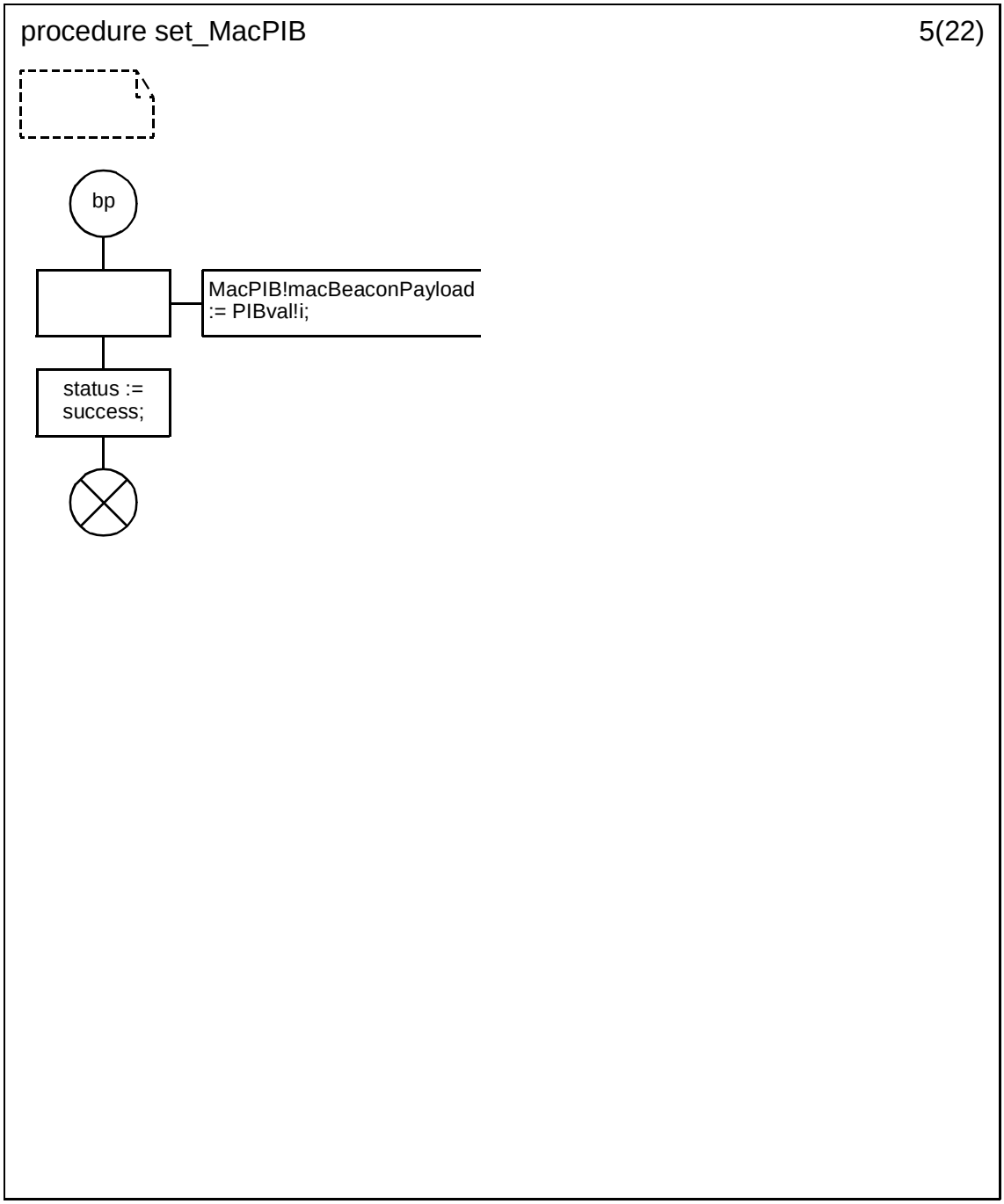



Copyright © 2003 IEEE. All rights reserved.
Authorized licensed use limited to: IEEE - Staff. Downloaded on October 28,2024 at 20:20:02 UTC from IEEE Xplore. Restrictions apply.

INTEL-1011
U.S. Patent 8,219,129

### D.3.1.154.103 Procedure set_MacPIB (6)

.

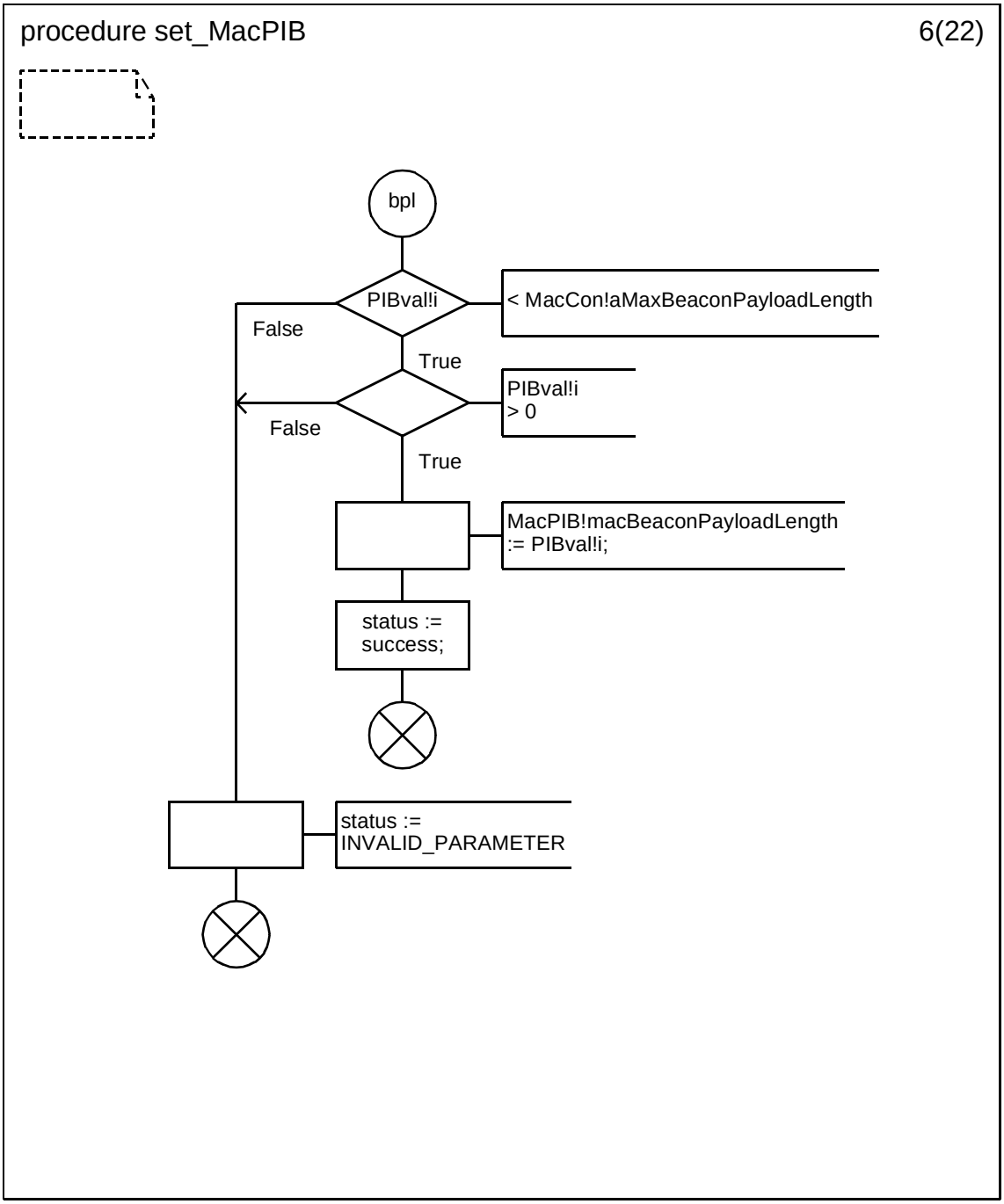


Copyright © 2003 IEEE. All rights reserved.

Authorized licensed use limited to: IEEE - Staff. Downloaded on October 28,2024 at 20:20:02 UTC from IEEE Xplore. Restrictions apply.

INTEL-1011
U.S. Patent 8,219,129

**D.3.1.154.104 Procedure set_MacPIB (7)**

.

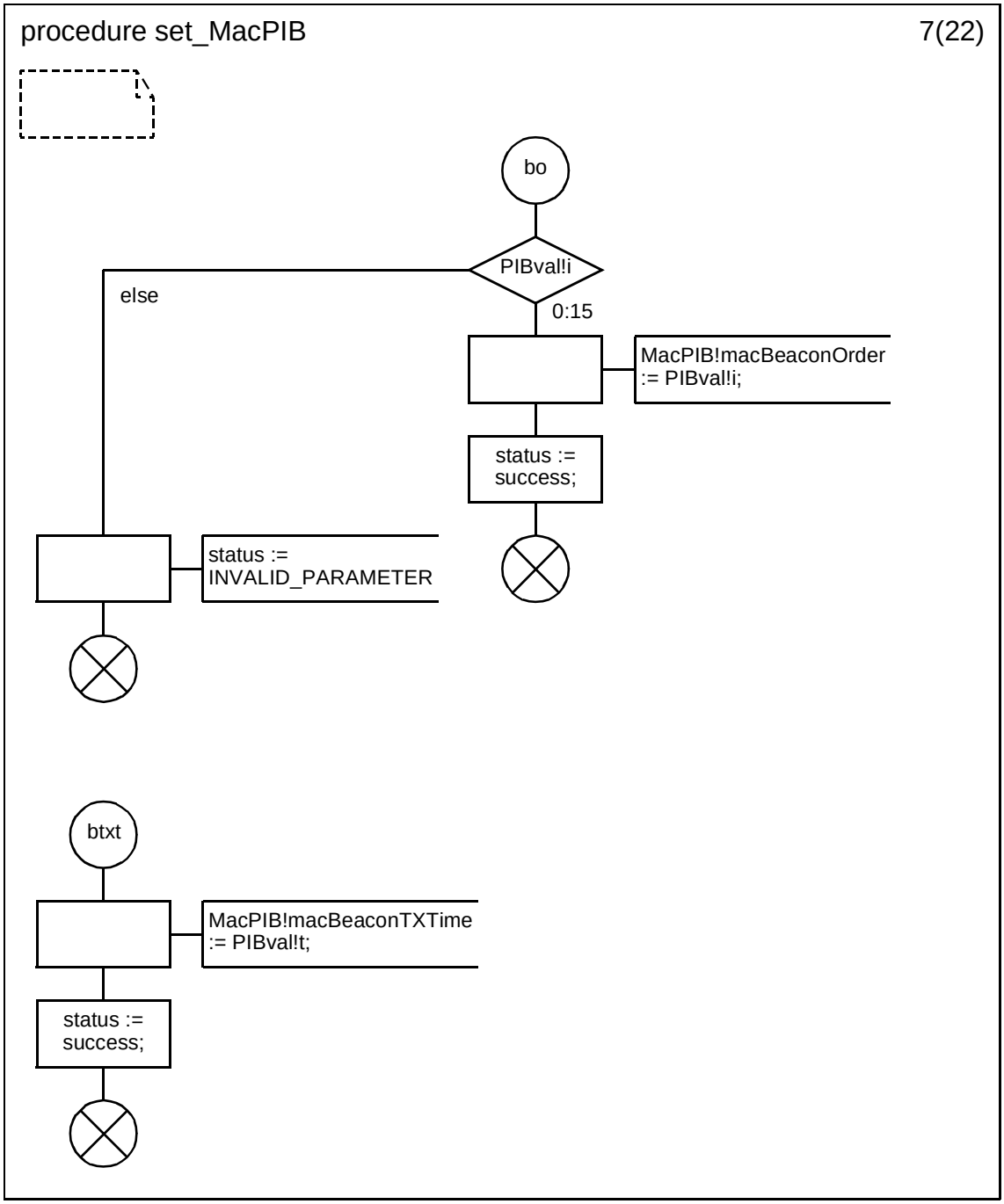



Copyright © 2003 IEEE. All rights reserved.
Authorized licensed use limited to: IEEE - Staff. Downloaded on October 28,2024 at 20:20:02 UTC from IEEE Xplore. Restrictions apply.

INTEL-1011
U.S. Patent 8,219,129

**D.3.1.154.105 Procedure set_MacPIB (8)**

.

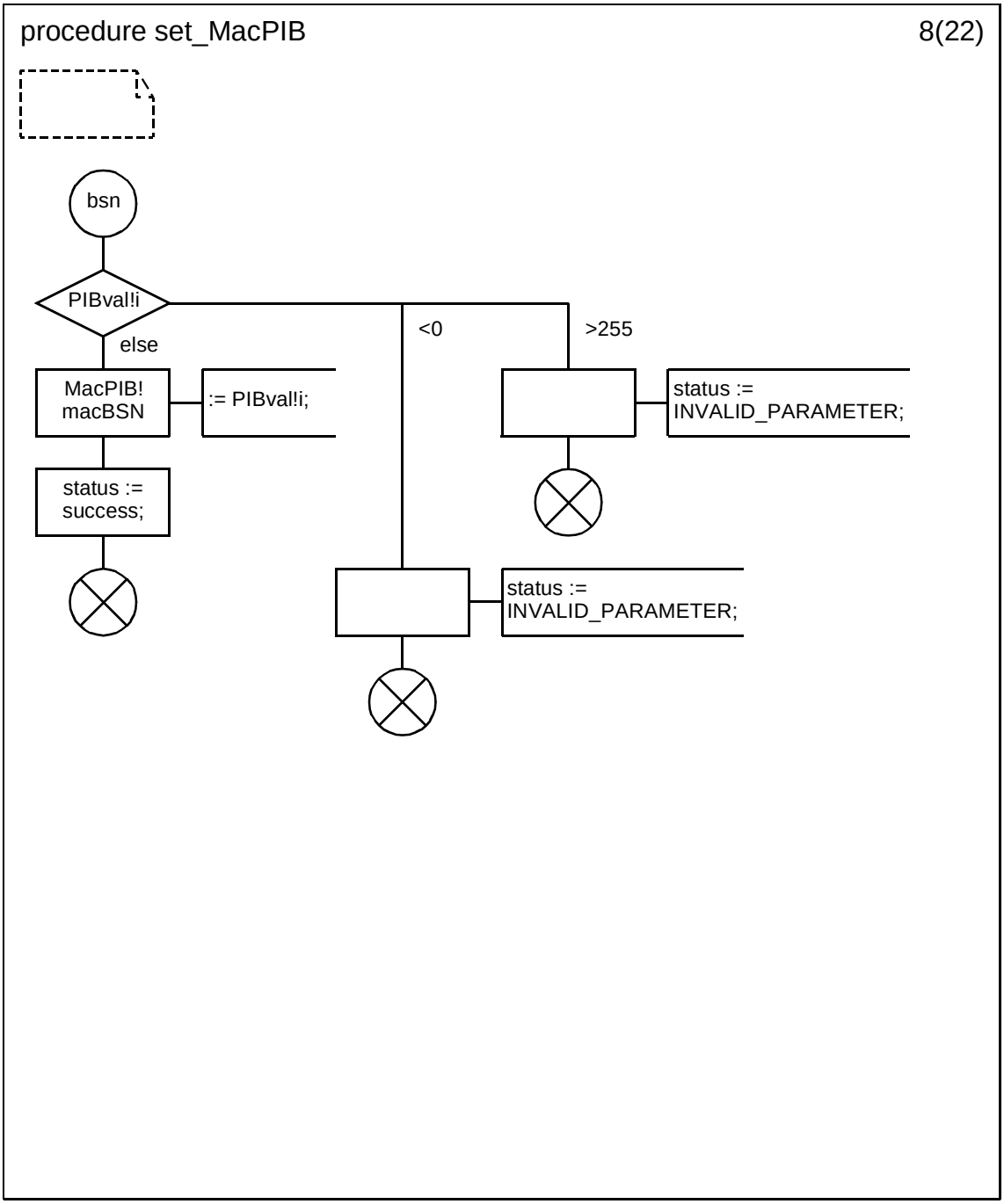


Copyright © 2003 IEEE. All rights reserved.

Authorized licensed use limited to: IEEE - Staff. Downloaded on October 28,2024 at 20:20:02 UTC from IEEE Xplore. Restrictions apply.

INTEL-1011
U.S. Patent 8,219,129

**D.3.1.154.106 Procedure set_MacPIB (9)**

.

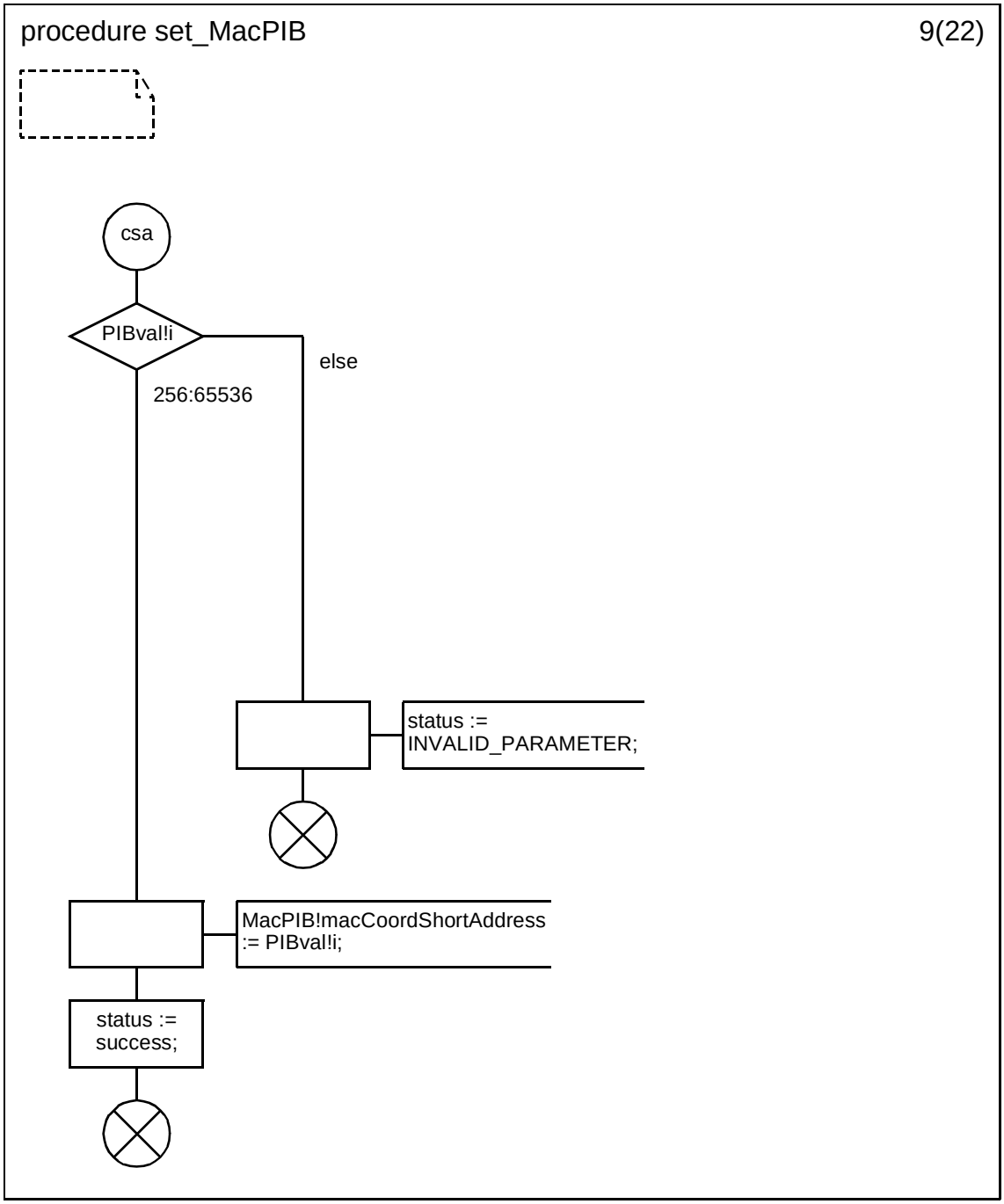



Copyright © 2003 IEEE. All rights reserved.
Authorized licensed use limited to: IEEE - Staff. Downloaded on October 28,2024 at 20:20:02 UTC from IEEE Xplore. Restrictions apply.

INTEL-1011
U.S. Patent 8,219,129

### D.3.1.154.107 Procedure set_MacPIB (10)

.

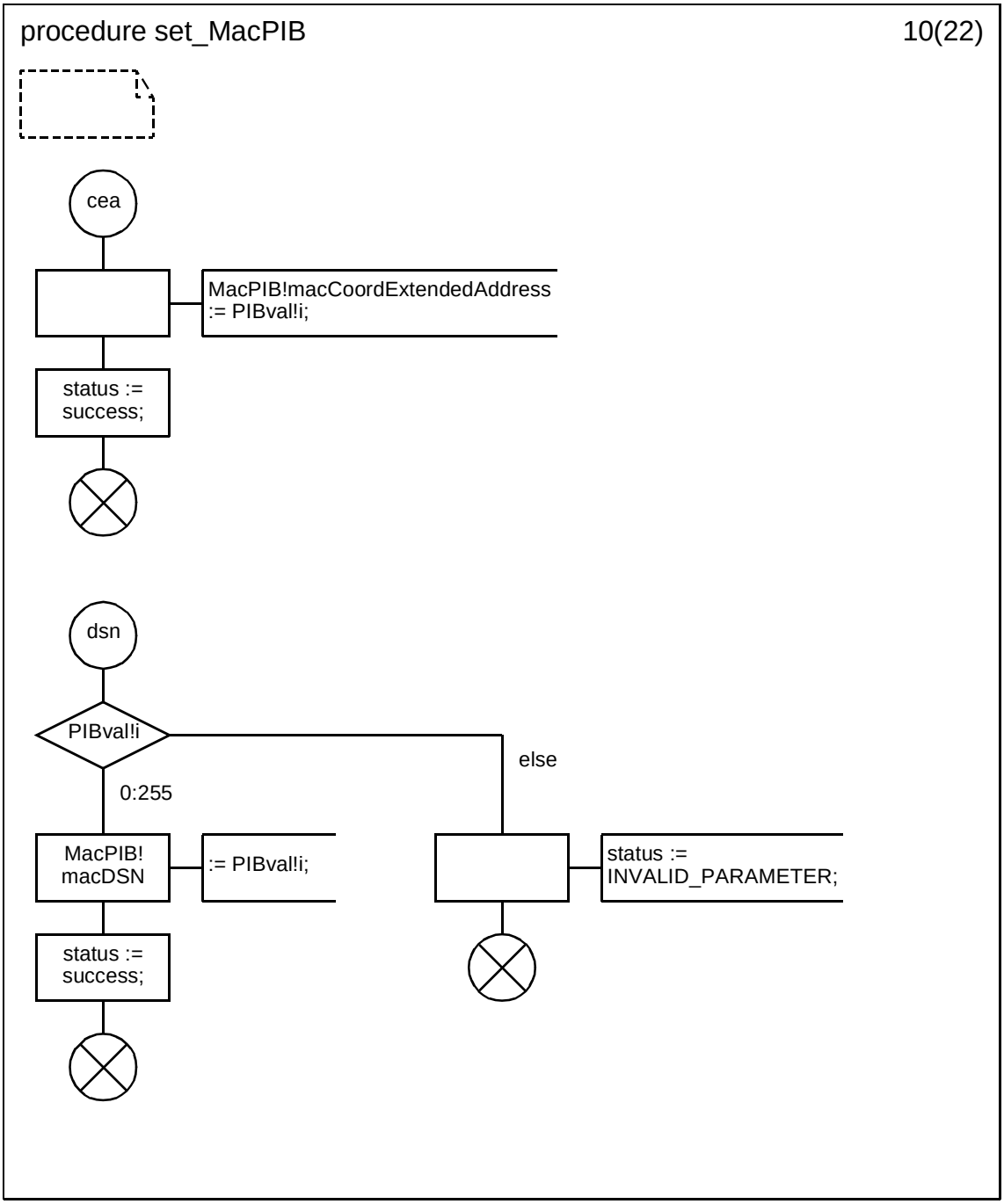


Copyright © 2003 IEEE. All rights reserved.

Authorized licensed use limited to: IEEE - Staff. Downloaded on October 28,2024 at 20:20:02 UTC from IEEE Xplore. Restrictions apply.

INTEL-1011
U.S. Patent 8,219,129

**D.3.1.154.108 Procedure set_MacPIB (11)**

.

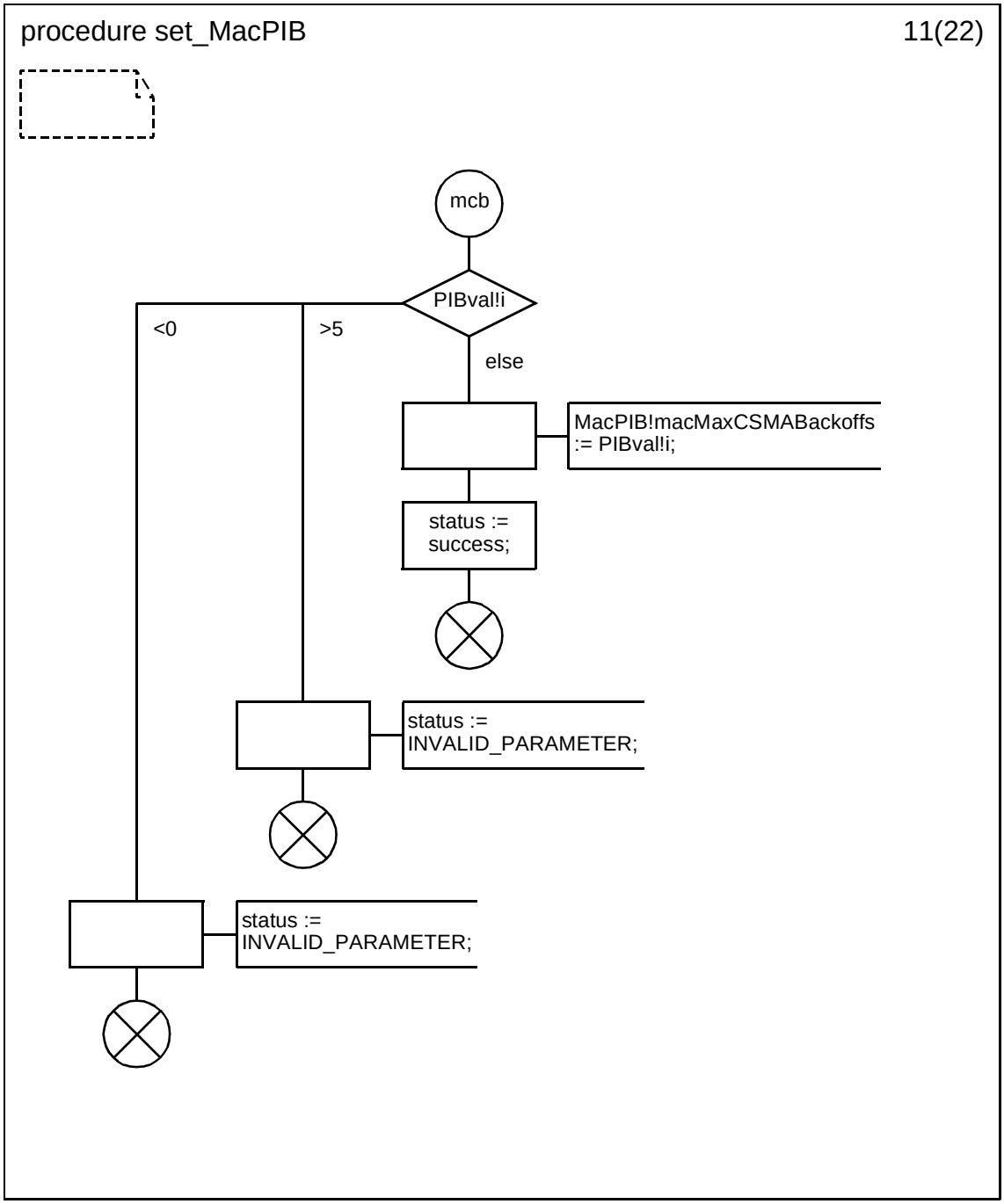



Copyright © 2003 IEEE. All rights reserved.
Authorized licensed use limited to: IEEE - Staff. Downloaded on October 28,2024 at 20:20:02 UTC from IEEE Xplore. Restrictions apply.

INTEL-1011
U.S. Patent 8,219,129

**D.3.1.154.109 Procedure set_MacPIB (12)**

.

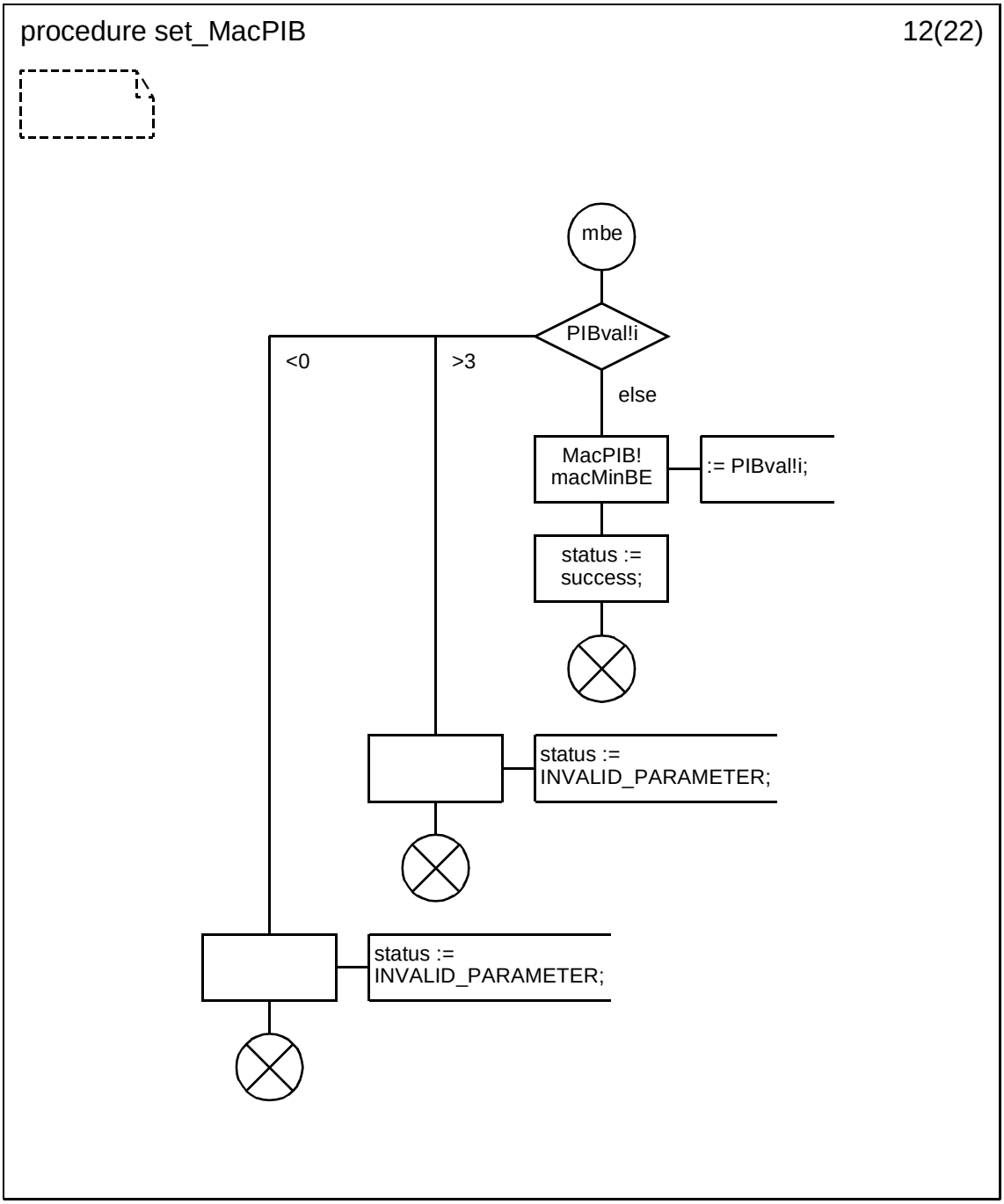


Copyright © 2003 IEEE. All rights reserved.

Authorized licensed use limited to: IEEE - Staff. Downloaded on October 28,2024 at 20:20:02 UTC from IEEE Xplore. Restrictions apply.

INTEL-1011
U.S. Patent 8,219,129

**D.3.1.154.110 Procedure set_MacPIB (13)**

.

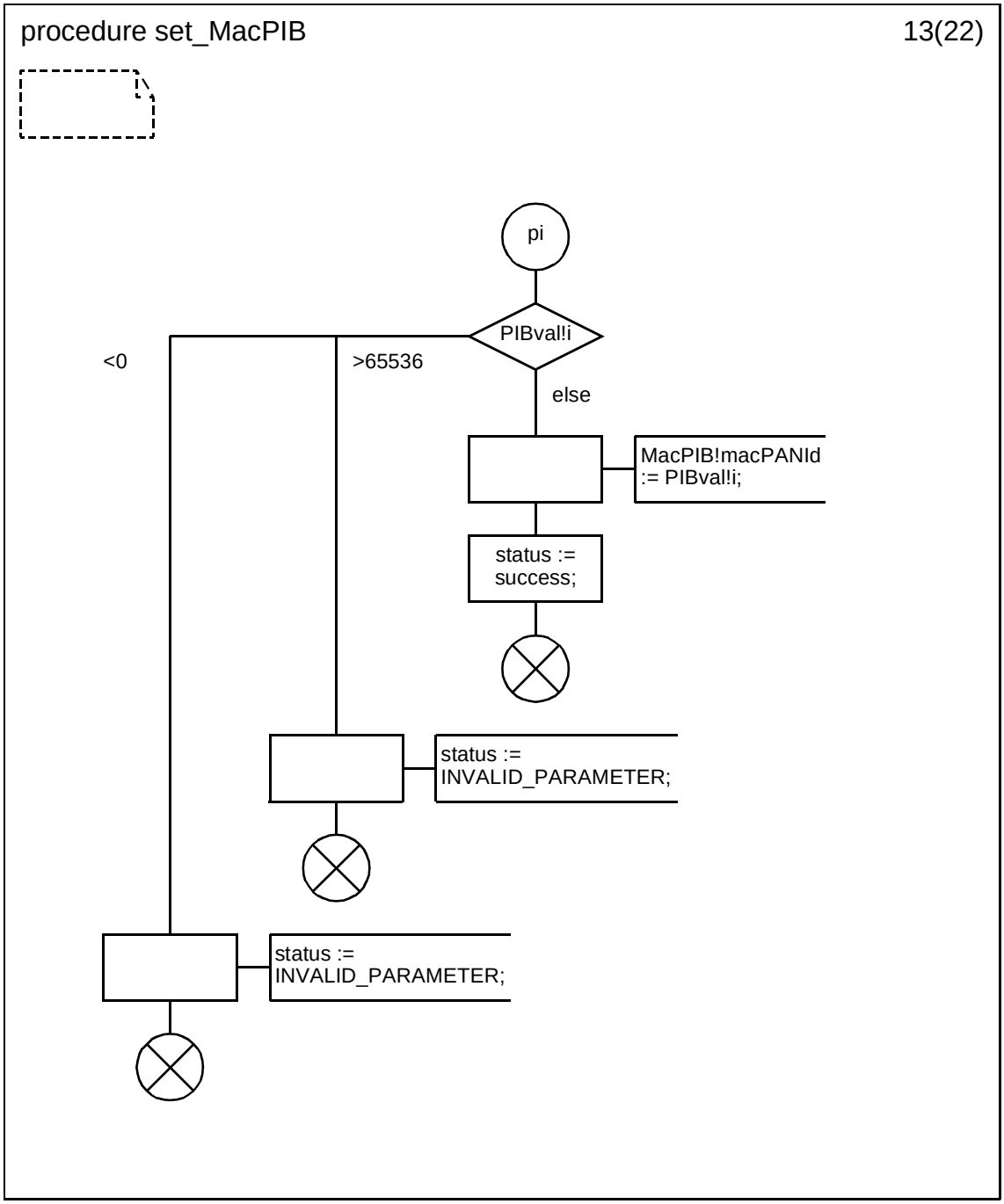



Copyright © 2003 IEEE. All rights reserved.
Authorized licensed use limited to: IEEE - Staff. Downloaded on October 28,2024 at 20:20:02 UTC from IEEE Xplore. Restrictions apply.

INTEL-1011
U.S. Patent 8,219,129

### D.3.1.154.111 Procedure set_MacPIB (14)

.

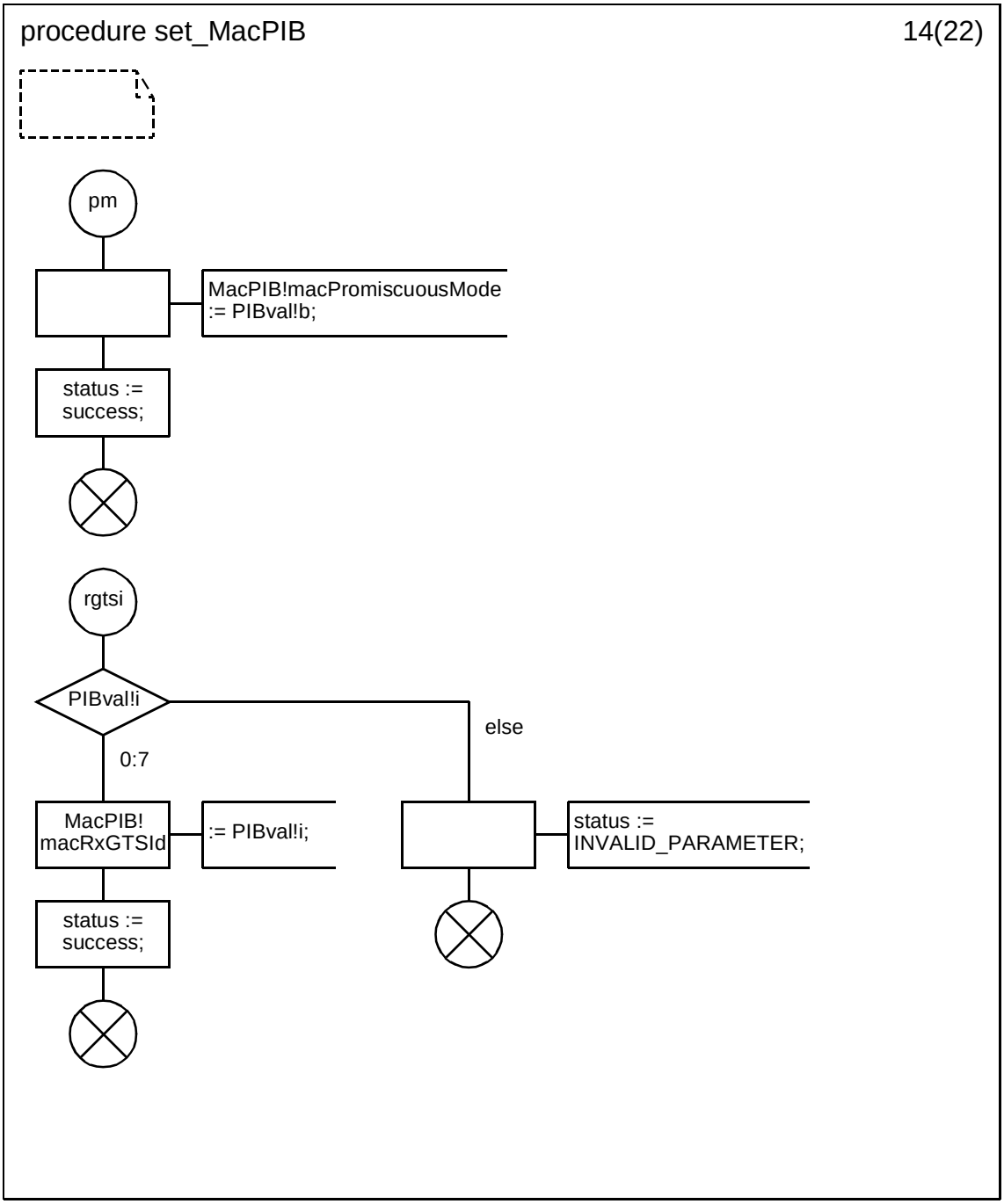


Copyright © 2003 IEEE. All rights reserved.

Authorized licensed use limited to: IEEE - Staff. Downloaded on October 28,2024 at 20:20:02 UTC from IEEE Xplore. Restrictions apply.

INTEL-1011
U.S. Patent 8,219,129

**D.3.1.154.112 Procedure set_MacPIB (15)**

.

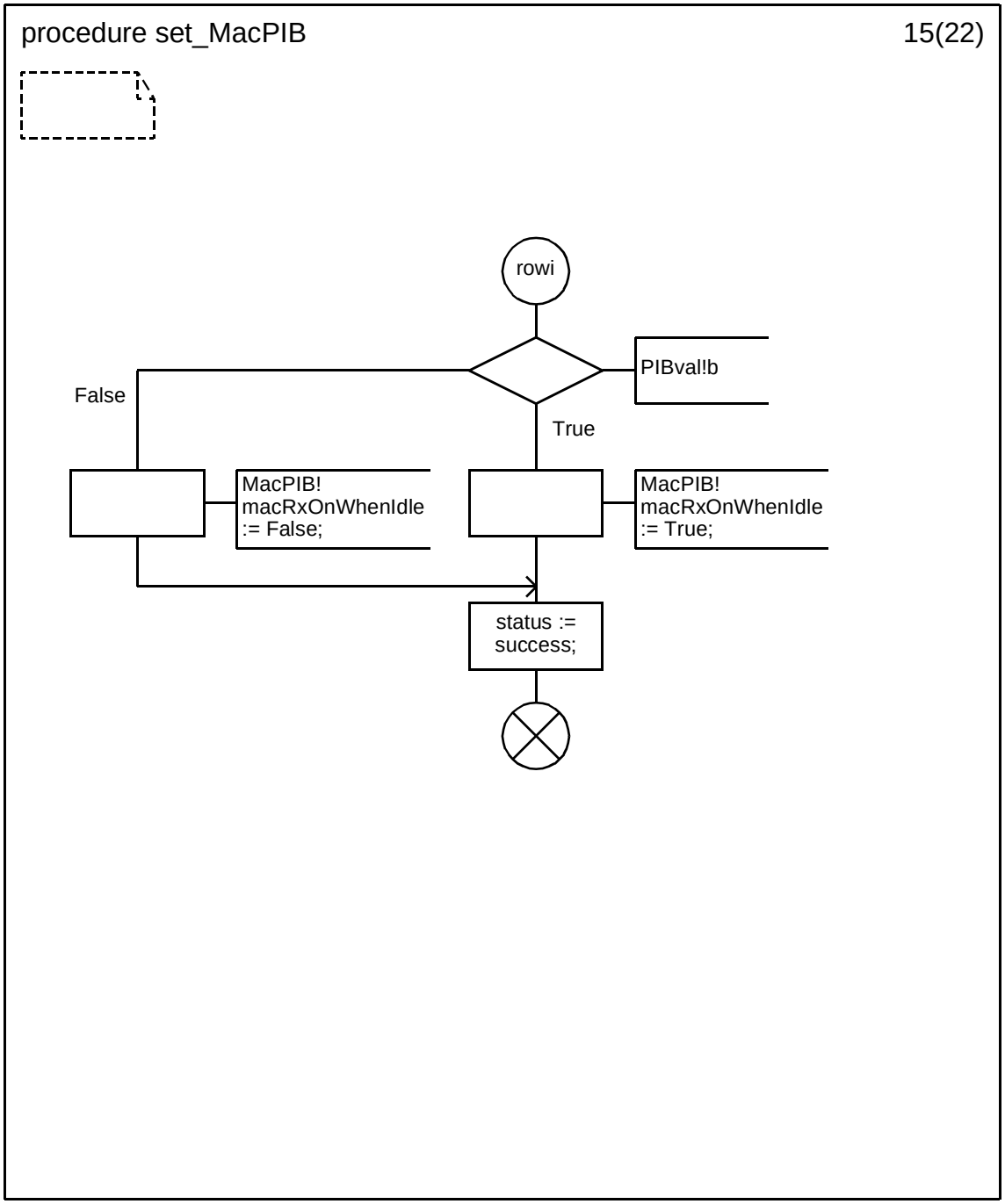



Copyright © 2003 IEEE. All rights reserved.
Authorized licensed use limited to: IEEE - Staff. Downloaded on October 28,2024 at 20:20:02 UTC from IEEE Xplore. Restrictions apply.

INTEL-1011
U.S. Patent 8,219,129

### D.3.1.154.113 Procedure set_MacPIB (16)

.

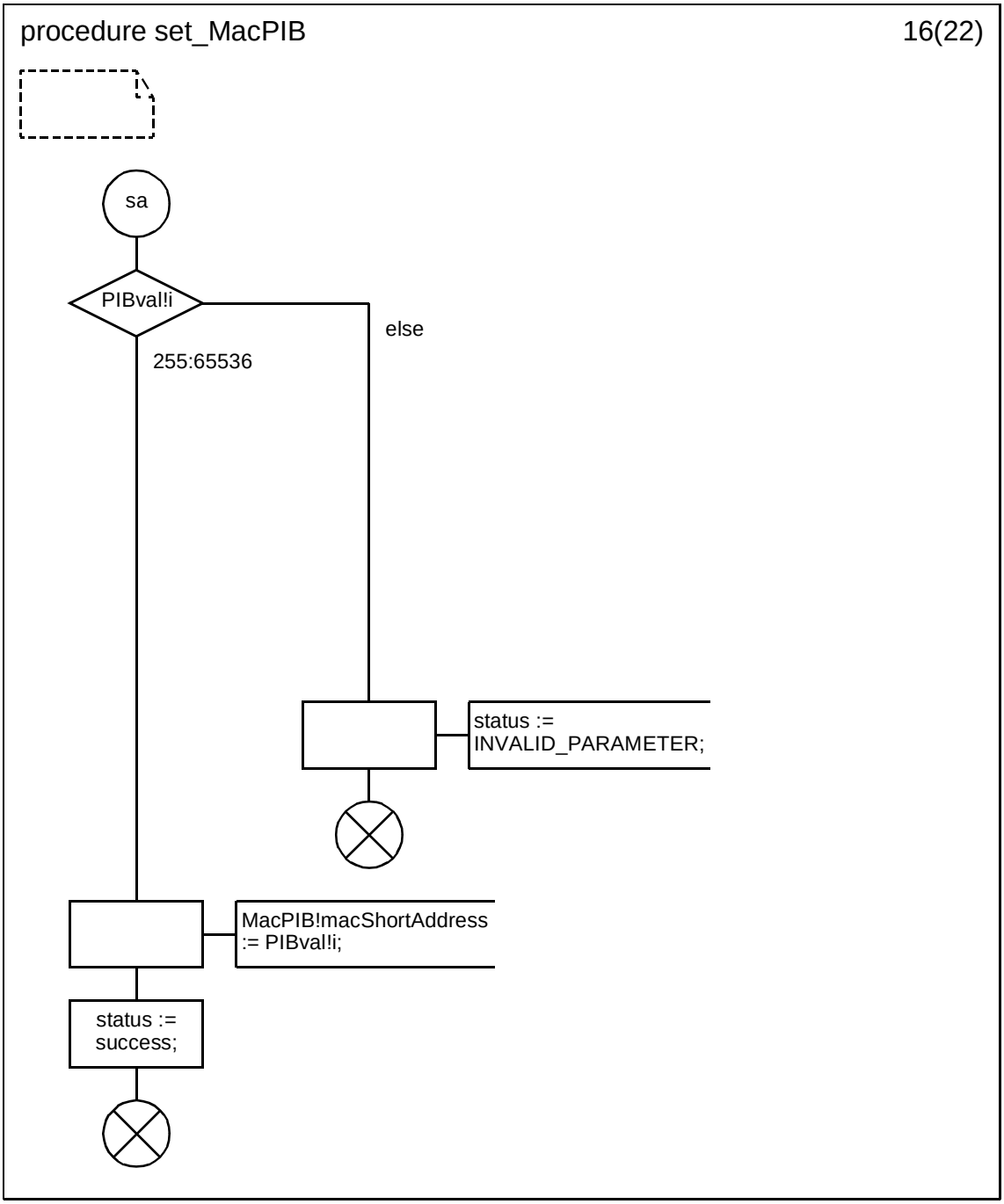


Copyright © 2003 IEEE. All rights reserved.

Authorized licensed use limited to: IEEE - Staff. Downloaded on October 28,2024 at 20:20:02 UTC from IEEE Xplore. Restrictions apply.

INTEL-1011
U.S. Patent 8,219,129

**D.3.1.154.114 Procedure set_MacPIB (17)**

.

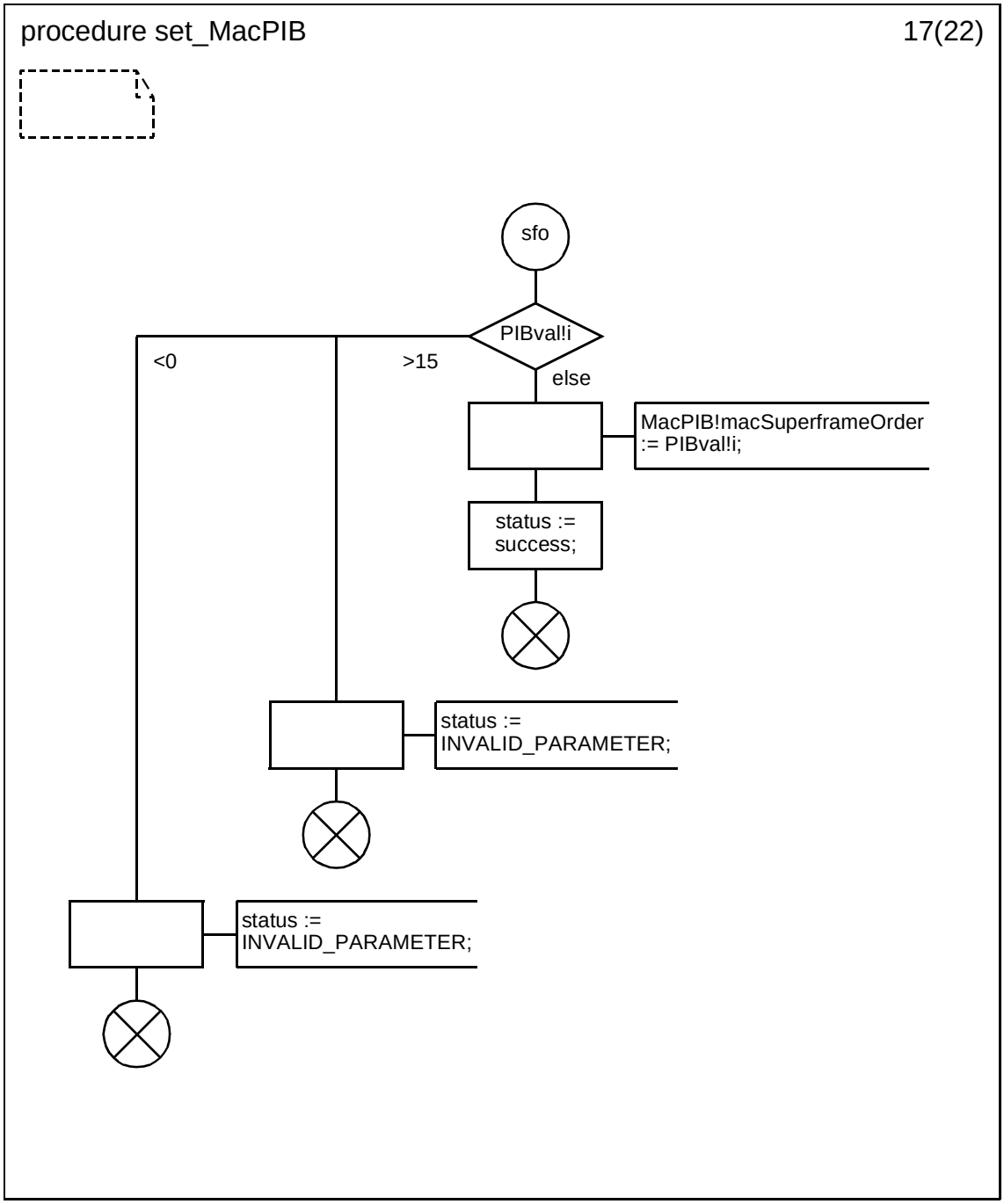



Copyright © 2003 IEEE. All rights reserved.
Authorized licensed use limited to: IEEE - Staff. Downloaded on October 28,2024 at 20:20:02 UTC from IEEE Xplore. Restrictions apply.

INTEL-1011
U.S. Patent 8,219,129

**D.3.1.154.115 Procedure set_MacPIB (18)**

.

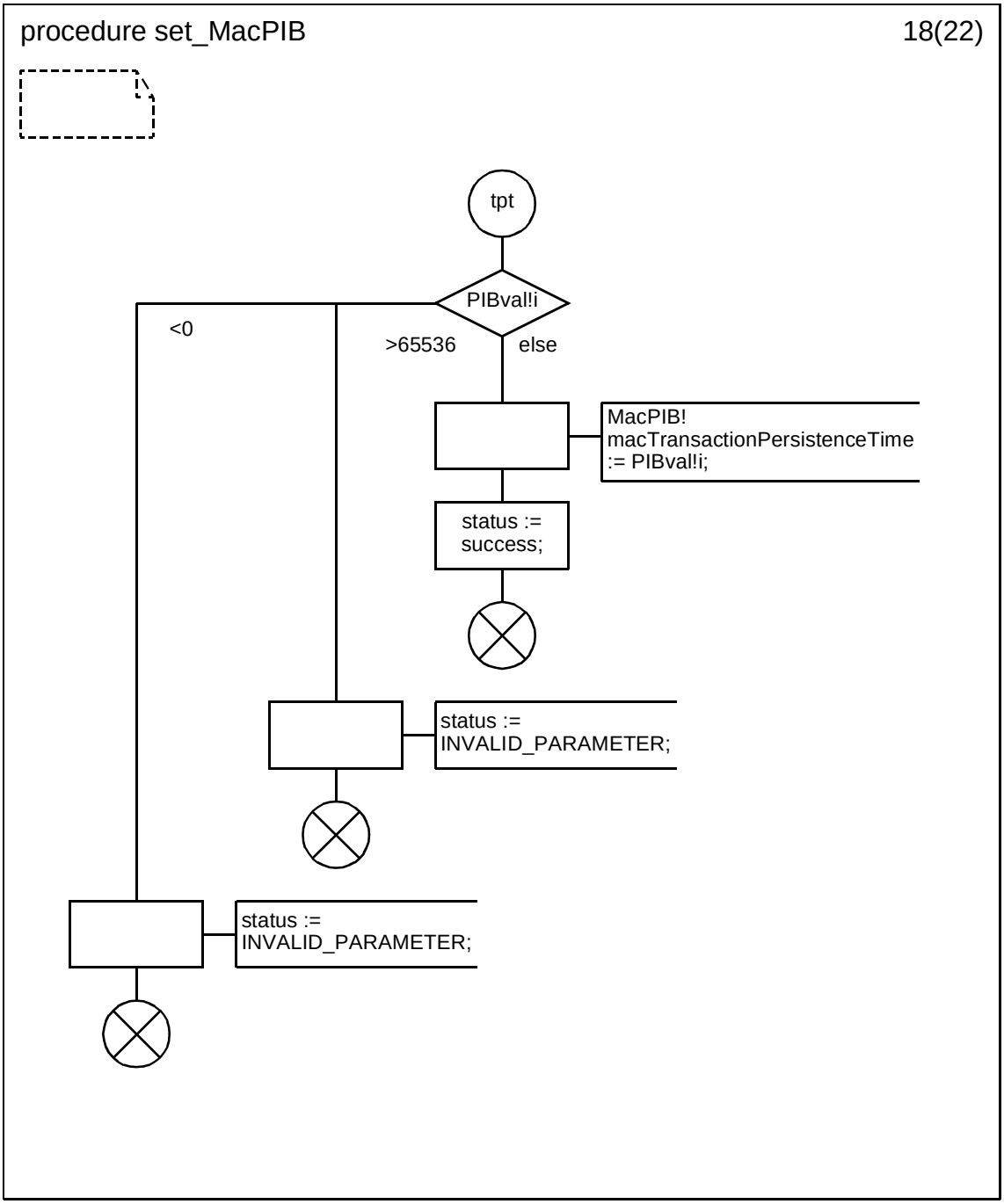


Copyright © 2003 IEEE. All rights reserved.

Authorized licensed use limited to: IEEE - Staff. Downloaded on October 28,2024 at 20:20:02 UTC from IEEE Xplore. Restrictions apply.

INTEL-1011
U.S. Patent 8,219,129

**D.3.1.154.116 Procedure set_MacPIB (19)**

.

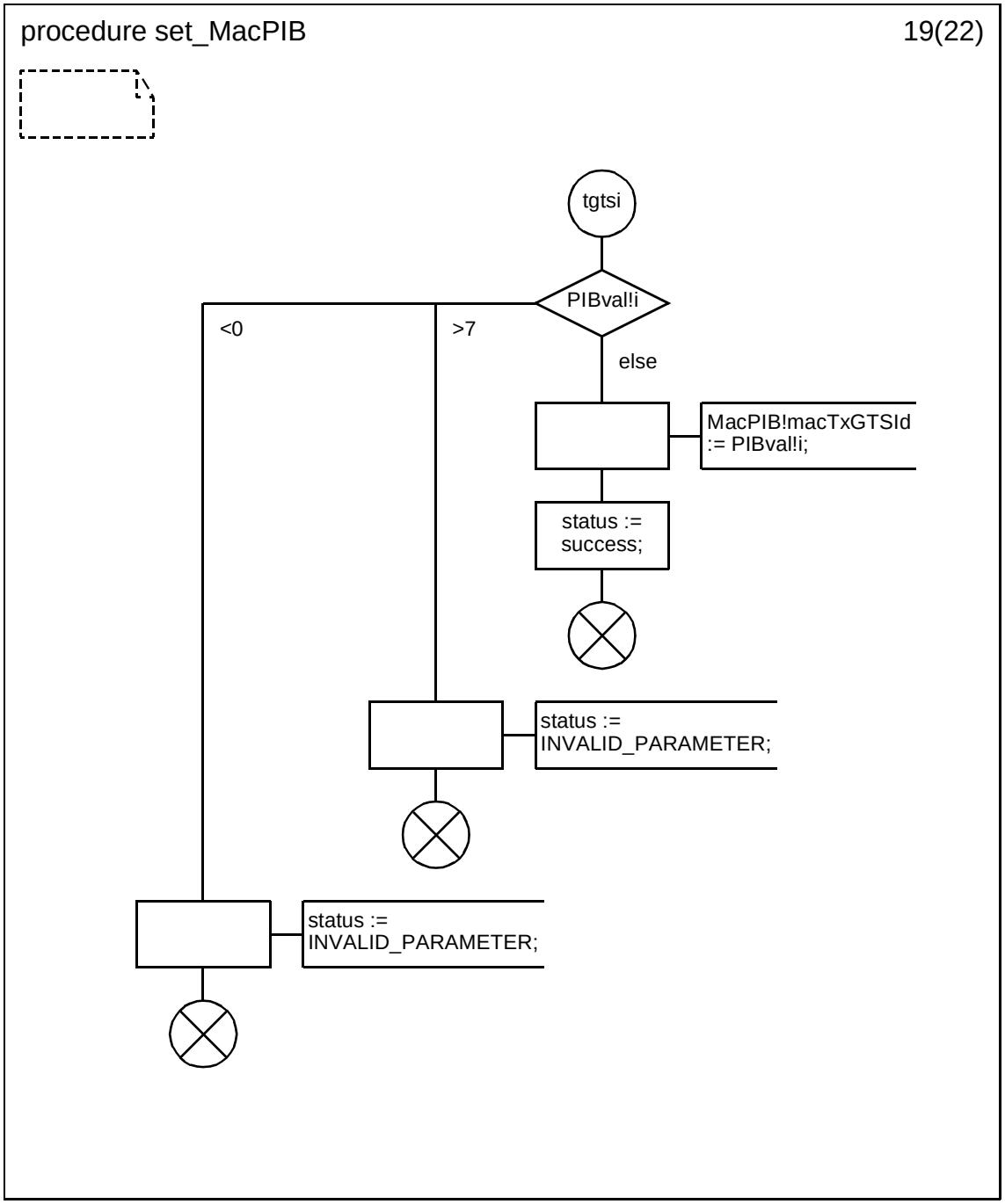



Copyright © 2003 IEEE. All rights reserved.
Authorized licensed use limited to: IEEE - Staff. Downloaded on October 28,2024 at 20:20:02 UTC from IEEE Xplore. Restrictions apply.

INTEL-1011
U.S. Patent 8,219,129

### D.3.1.154.117 Procedure set_MacPIB (20)

.

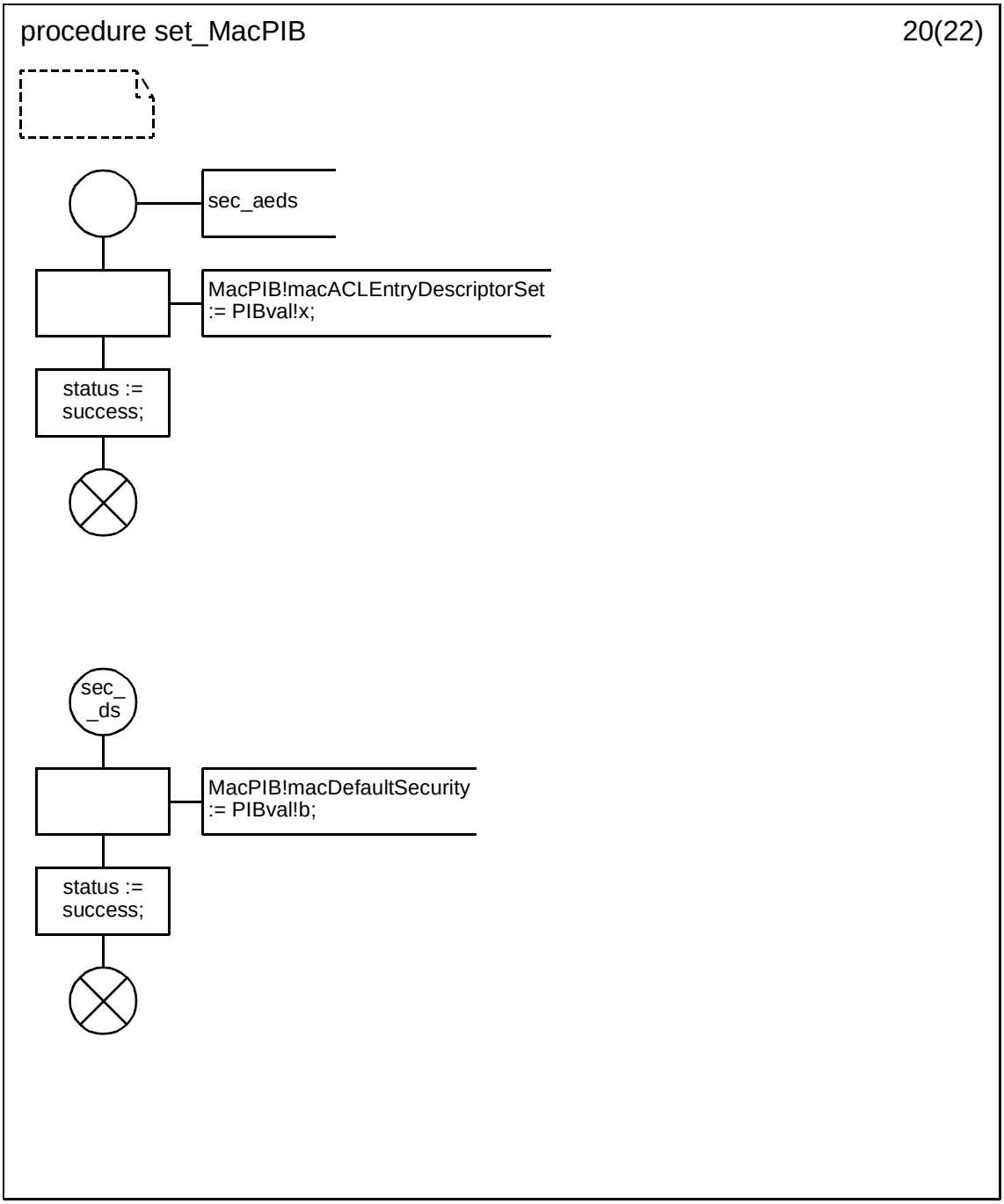


Copyright © 2003 IEEE. All rights reserved.

Authorized licensed use limited to: IEEE - Staff. Downloaded on October 28,2024 at 20:20:02 UTC from IEEE Xplore. Restrictions apply.

INTEL-1011
U.S. Patent 8,219,129

**D.3.1.154.118 Procedure set_MacPIB (21)**

.

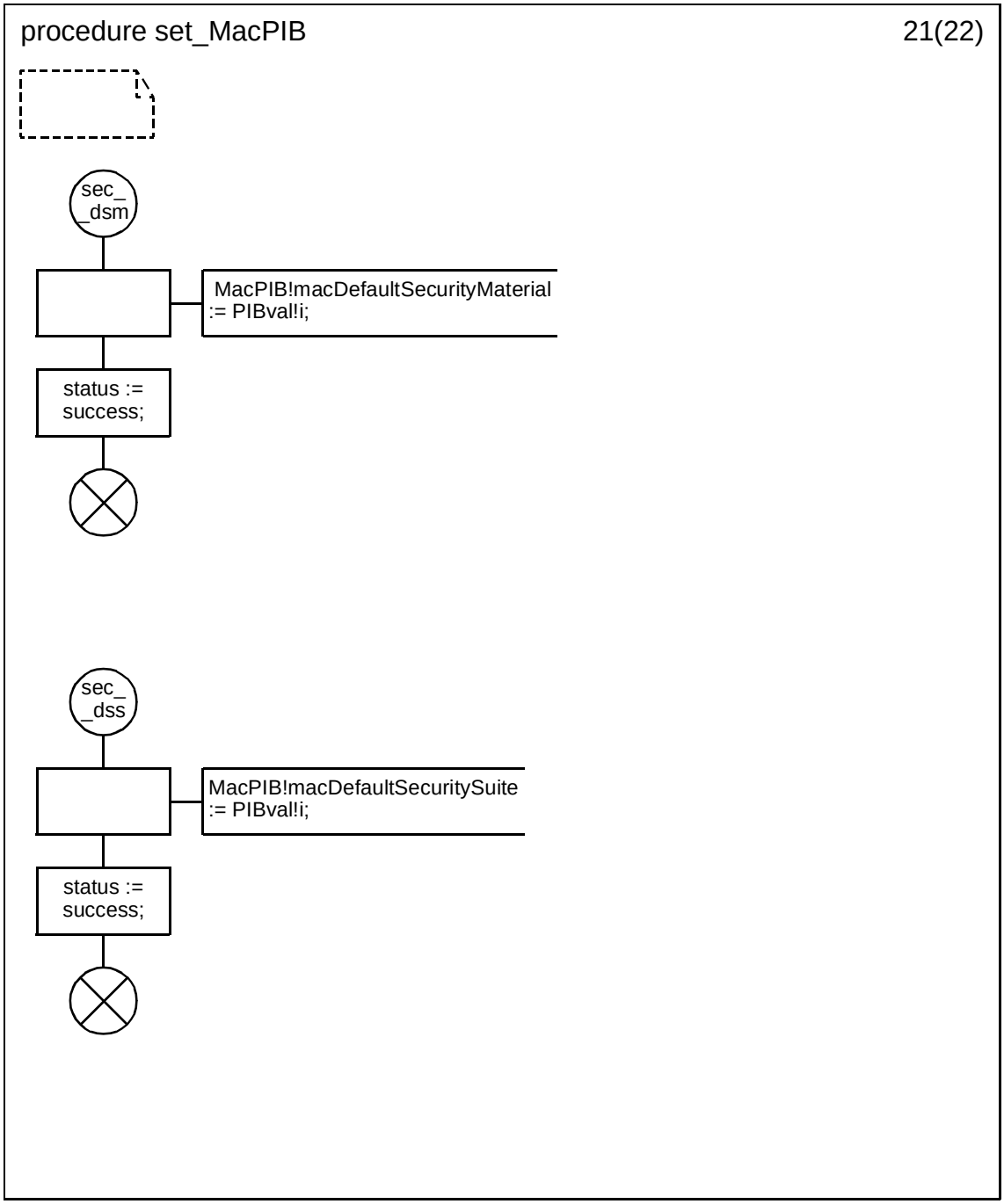



Copyright © 2003 IEEE. All rights reserved.
Authorized licensed use limited to: IEEE - Staff. Downloaded on October 28,2024 at 20:20:02 UTC from IEEE Xplore. Restrictions apply.

INTEL-1011
U.S. Patent 8,219,129

### D.3.1.154.119 Procedure set_MacPIB (22)

.

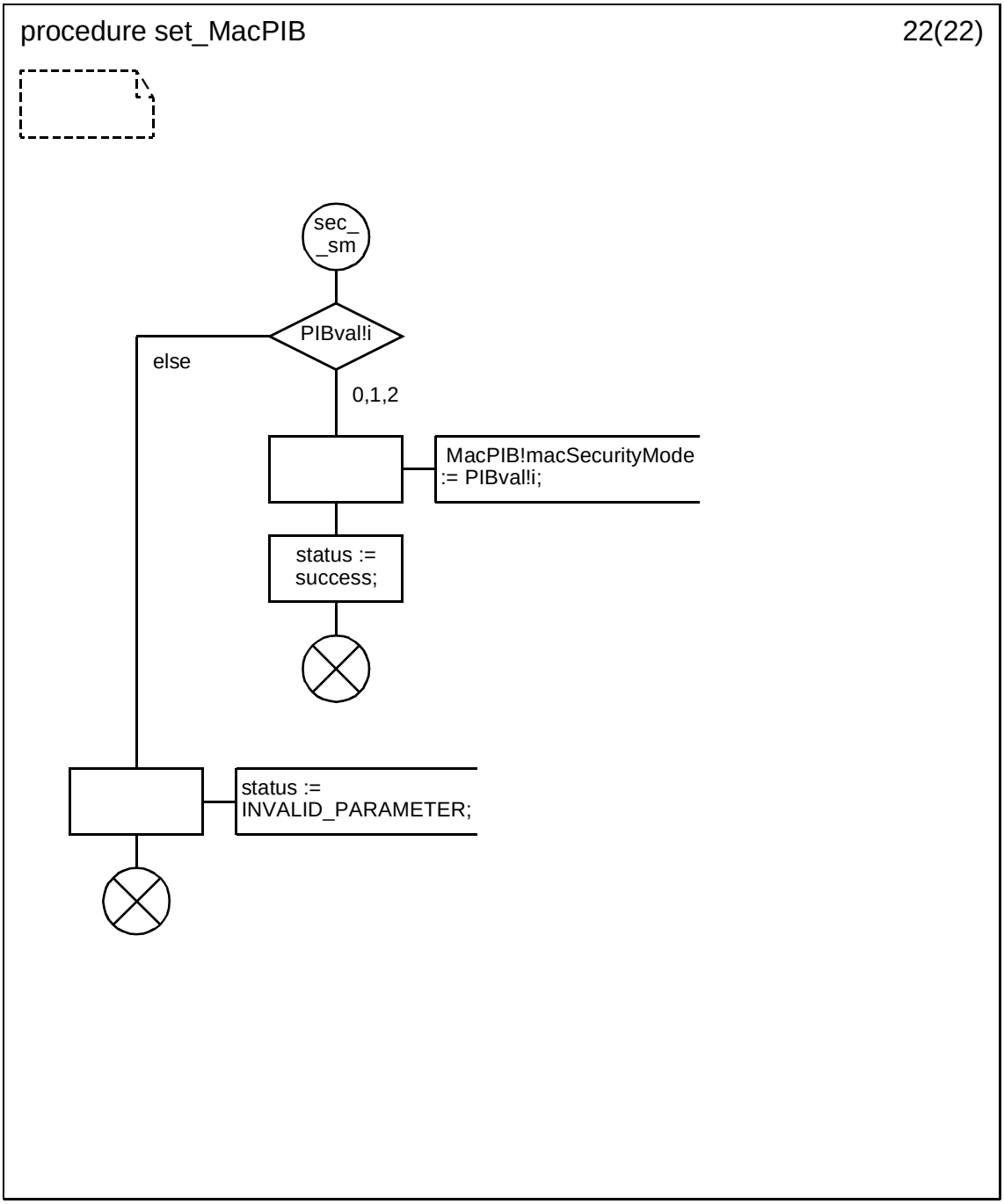


Copyright © 2003 IEEE. All rights reserved.

Authorized licensed use limited to: IEEE - Staff. Downloaded on October 28,2024 at 20:20:02 UTC from IEEE Xplore. Restrictions apply.

INTEL-1011
U.S. Patent 8,219,129

### D.3.1.154.120 Procedure random_backoff

.

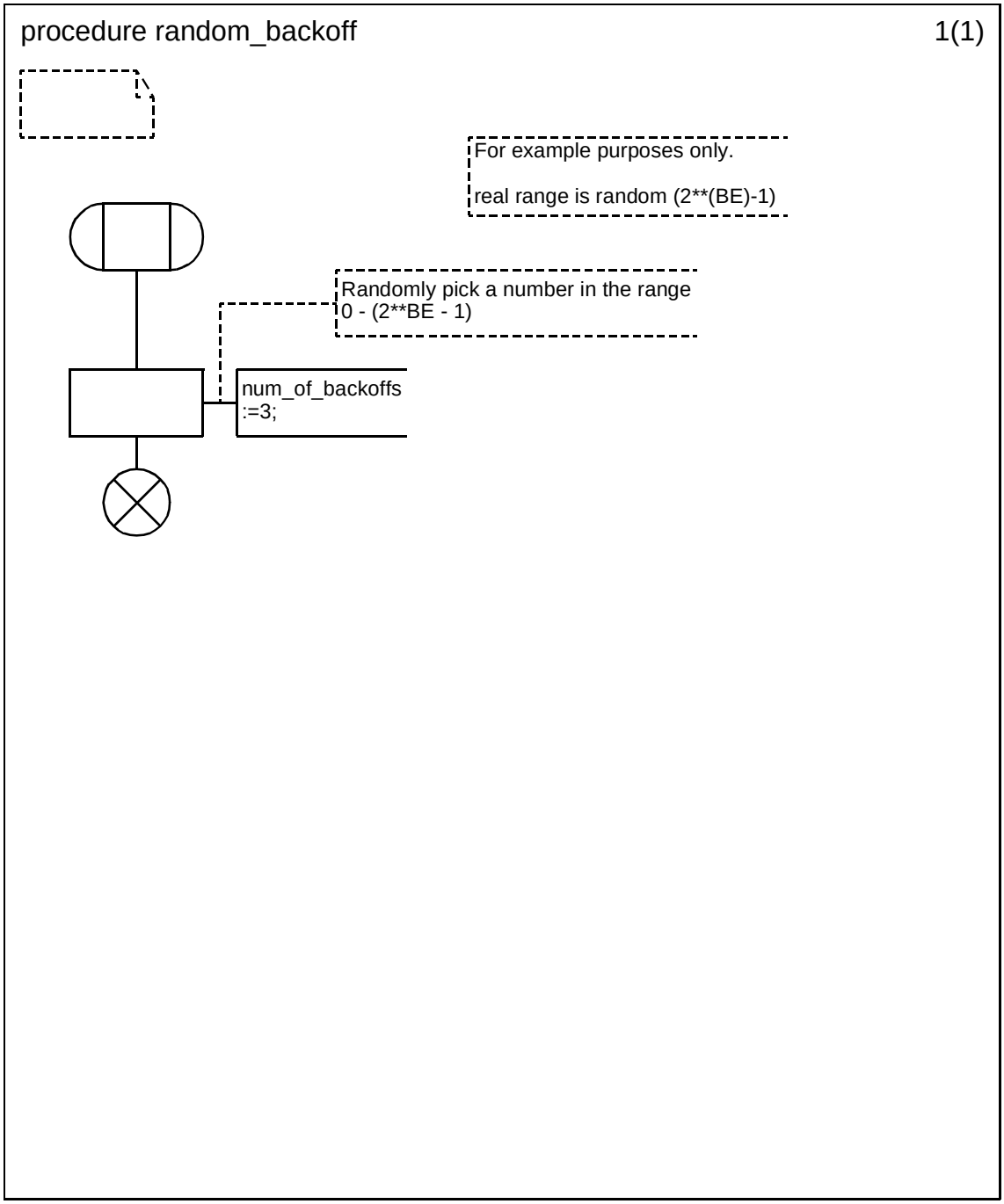



Copyright © 2003 IEEE. All rights reserved.
Authorized licensed use limited to: IEEE - Staff. Downloaded on October 28,2024 at 20:20:02 UTC from IEEE Xplore. Restrictions apply.

INTEL-1011
U.S. Patent 8,219,129

**D.3.1.154.121 Procedure select_channel (1)**

.

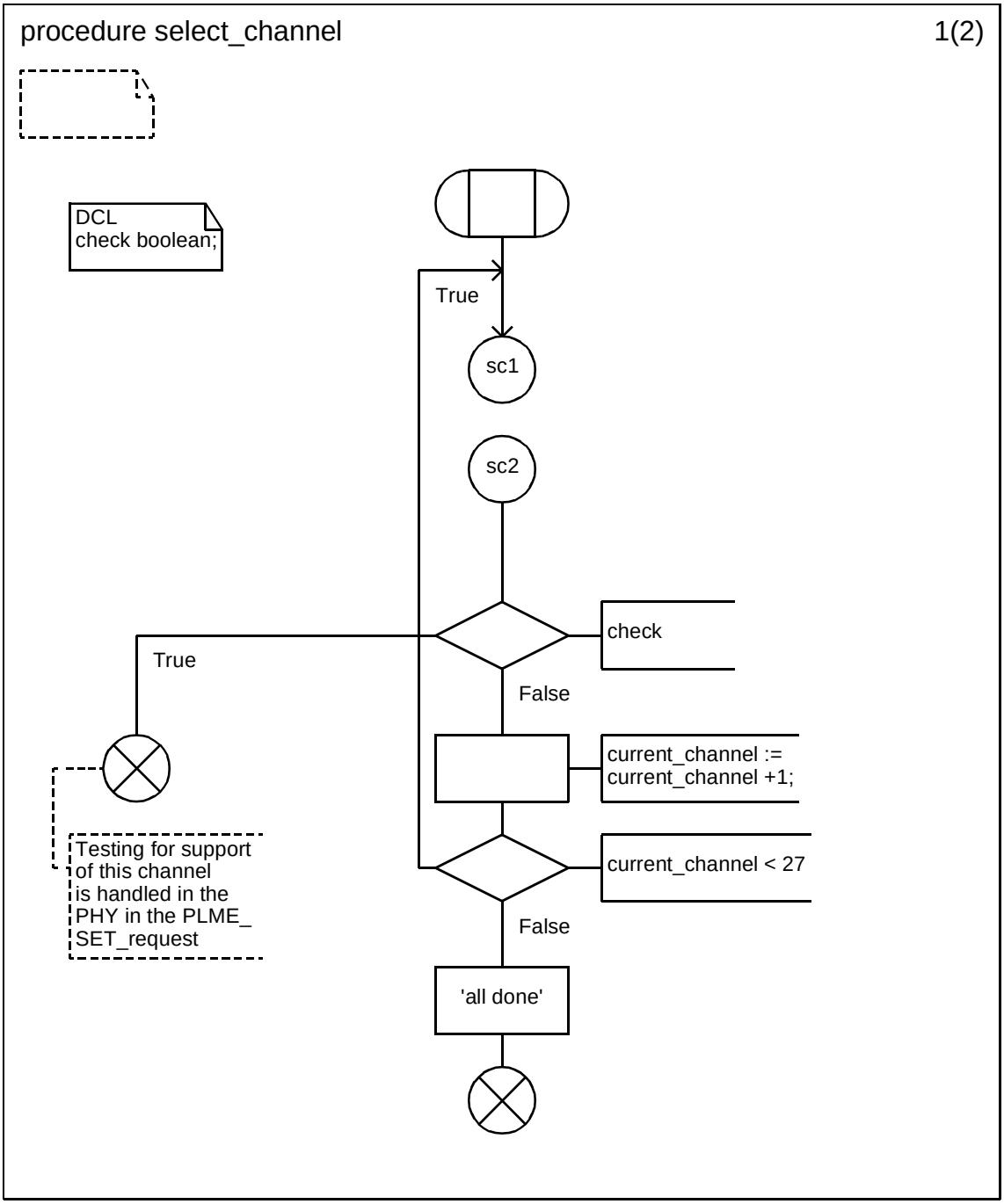


Copyright © 2003 IEEE. All rights reserved.

Authorized licensed use limited to: IEEE - Staff. Downloaded on October 28,2024 at 20:20:02 UTC from IEEE Xplore. Restrictions apply.

INTEL-1011
U.S. Patent 8,219,129

**D.3.1.154.122 Procedure select_channel (2)**

.

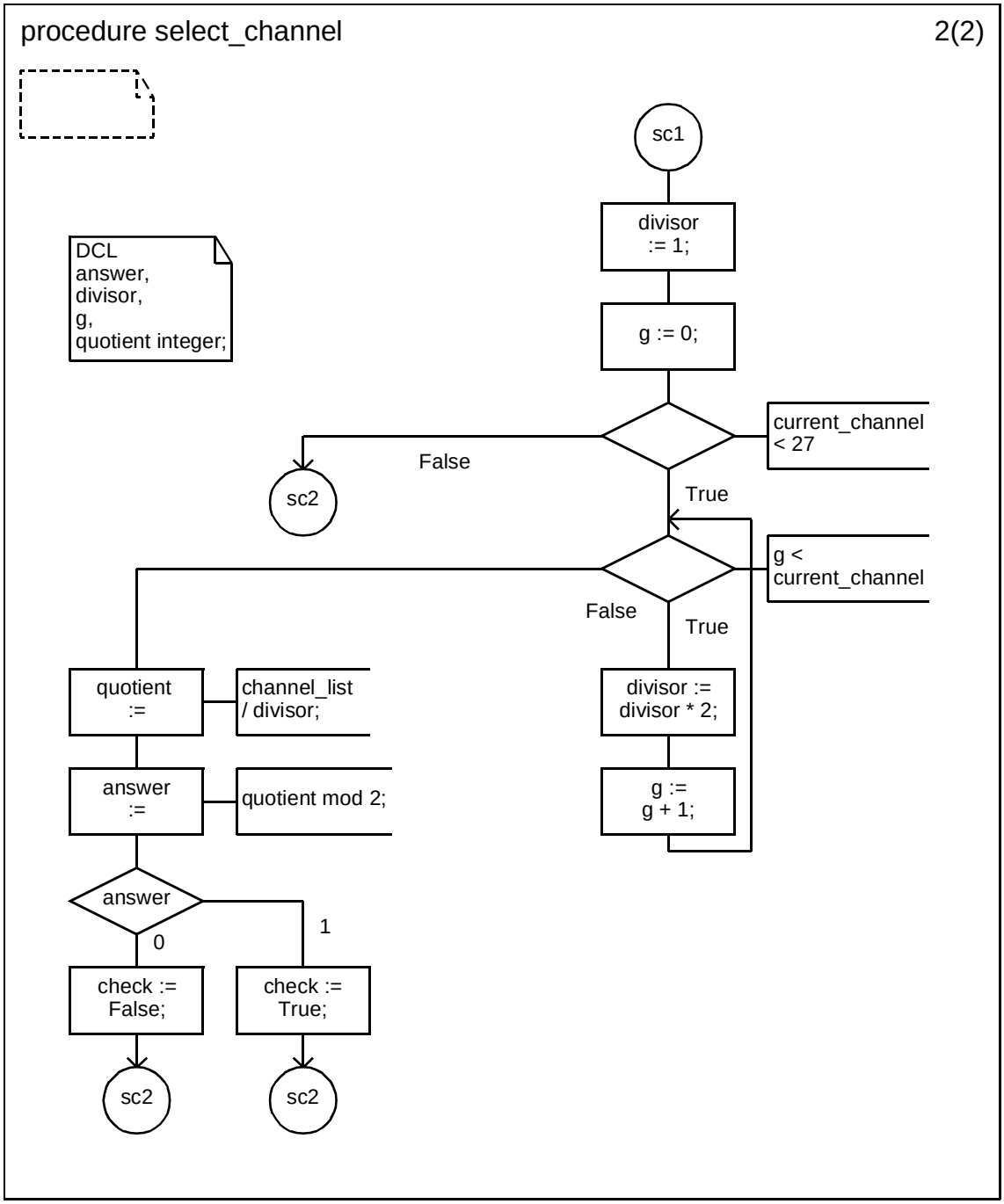



Copyright © 2003 IEEE. All rights reserved.
Authorized licensed use limited to: IEEE - Staff. Downloaded on October 28,2024 at 20:20:02 UTC from IEEE Xplore. Restrictions apply.

INTEL-1011
U.S. Patent 8,219,129

### D.3.1.154.122.1 Procedure store_pending_data (1)

.

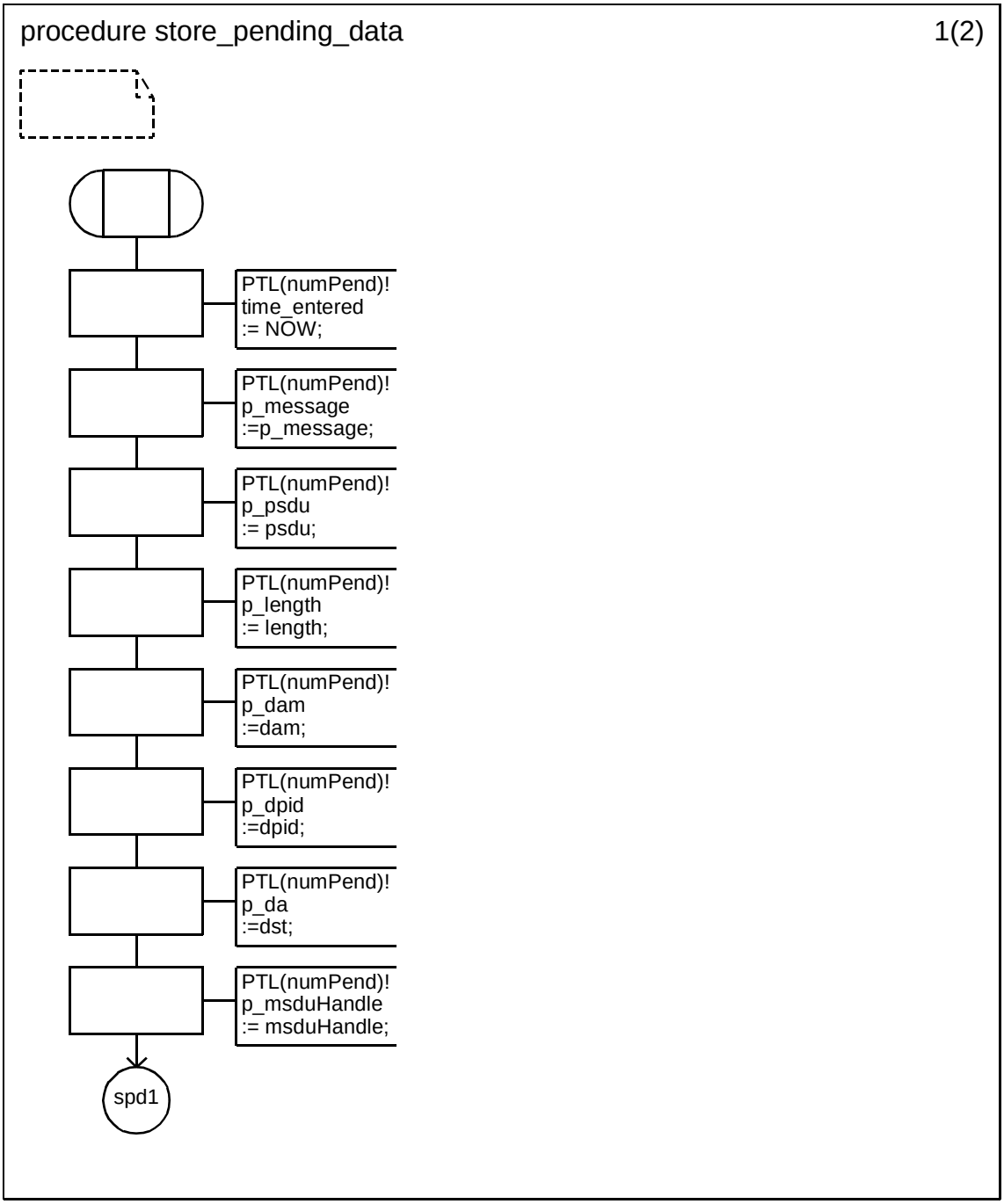


Copyright © 2003 IEEE. All rights reserved.

Authorized licensed use limited to: IEEE - Staff. Downloaded on October 28,2024 at 20:20:02 UTC from IEEE Xplore. Restrictions apply.

INTEL-1011
U.S. Patent 8,219,129

**D.3.1.154.122.2 Procedure store_pending_data (2)**

.

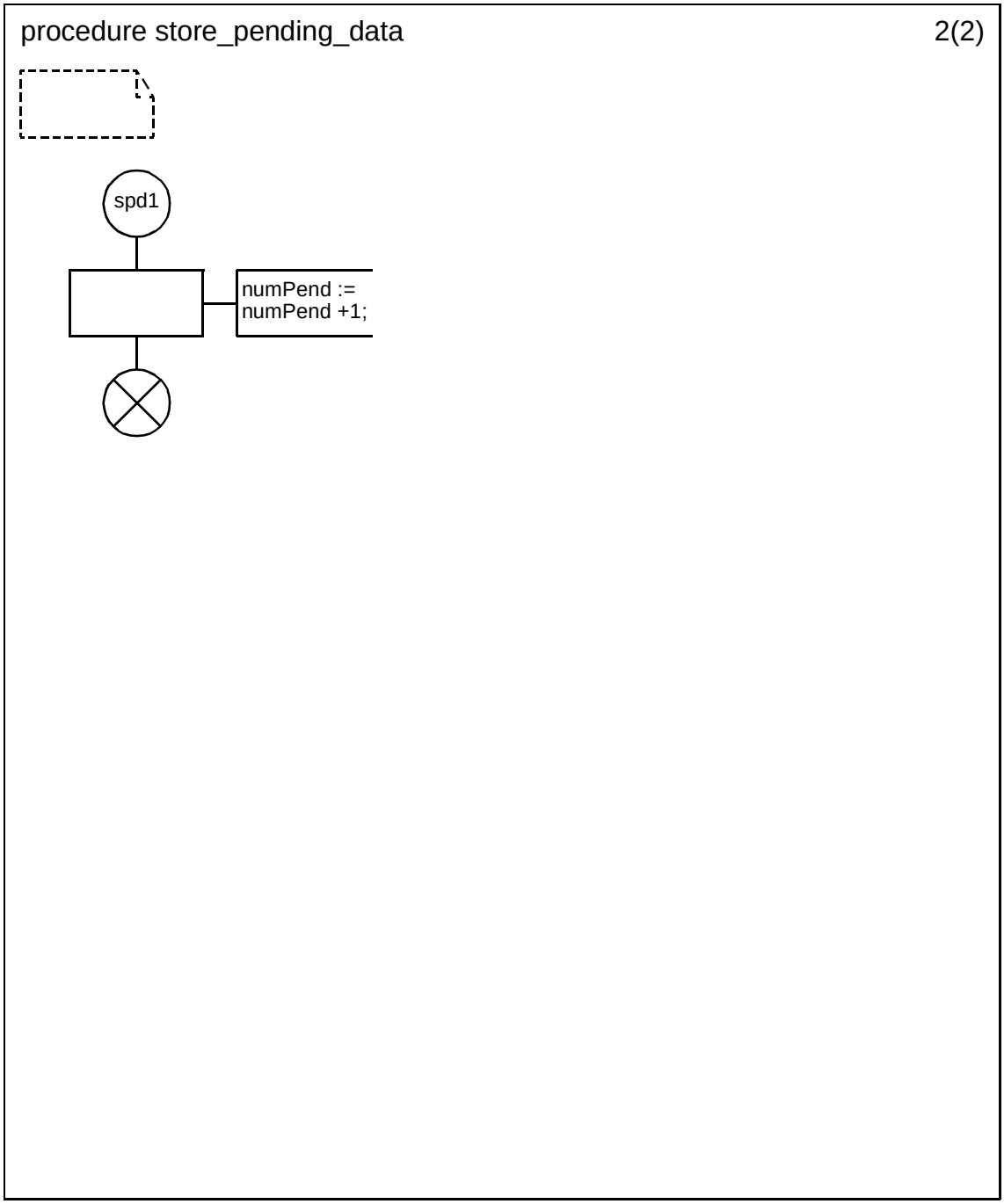



Copyright © 2003 IEEE. All rights reserved.
Authorized licensed use limited to: IEEE - Staff. Downloaded on October 28,2024 at 20:20:02 UTC from IEEE Xplore. Restrictions apply.

INTEL-1011
U.S. Patent 8,219,129

### D.3.1.154.122.3 Procedure retrieve_pending

.

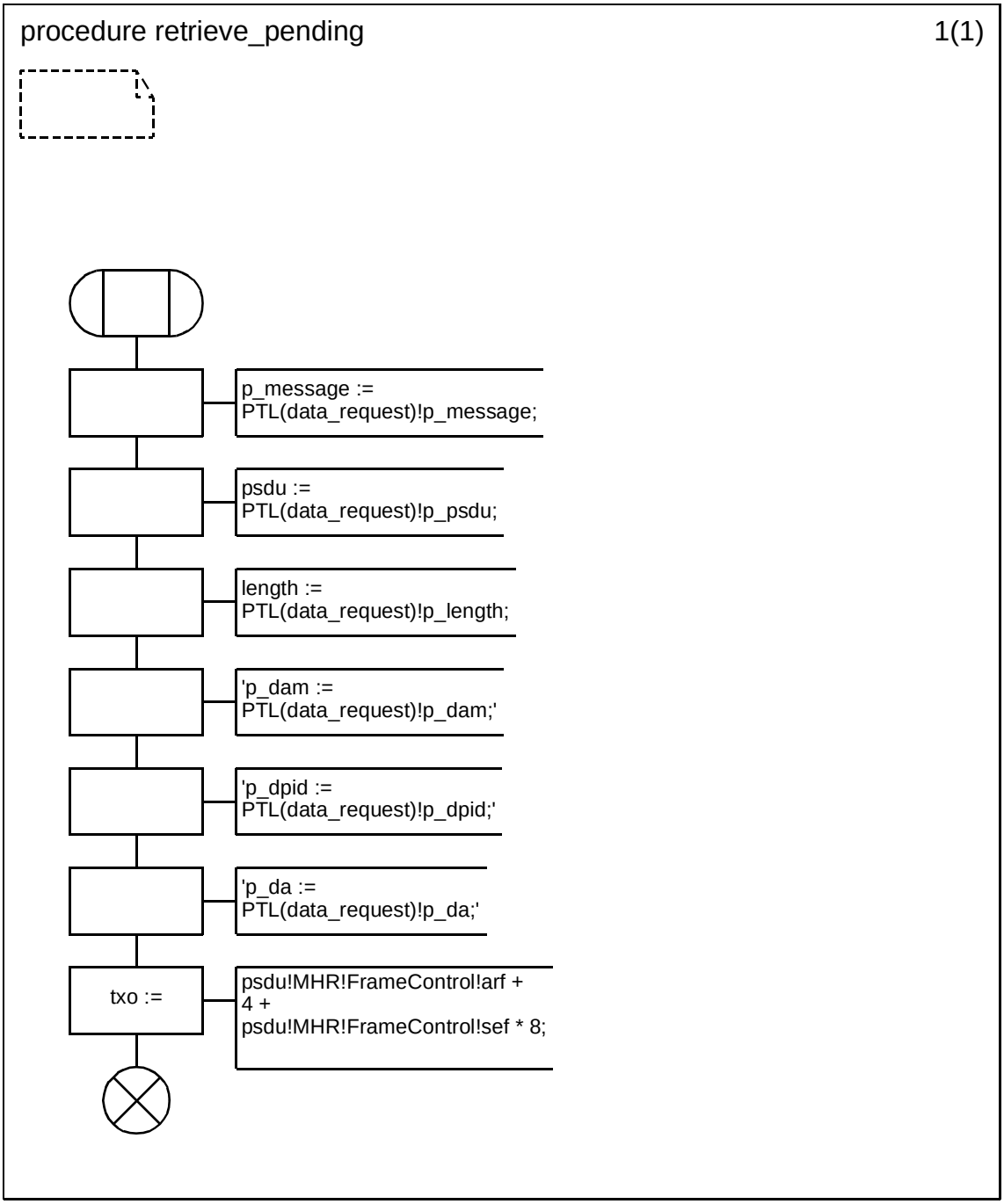


Copyright © 2003 IEEE. All rights reserved.

Authorized licensed use limited to: IEEE - Staff. Downloaded on October 28,2024 at 20:20:02 UTC from IEEE Xplore. Restrictions apply.

INTEL-1011
U.S. Patent 8,219,129

**D.3.1.154.122.4 Procedure delete_entry (1)**

.

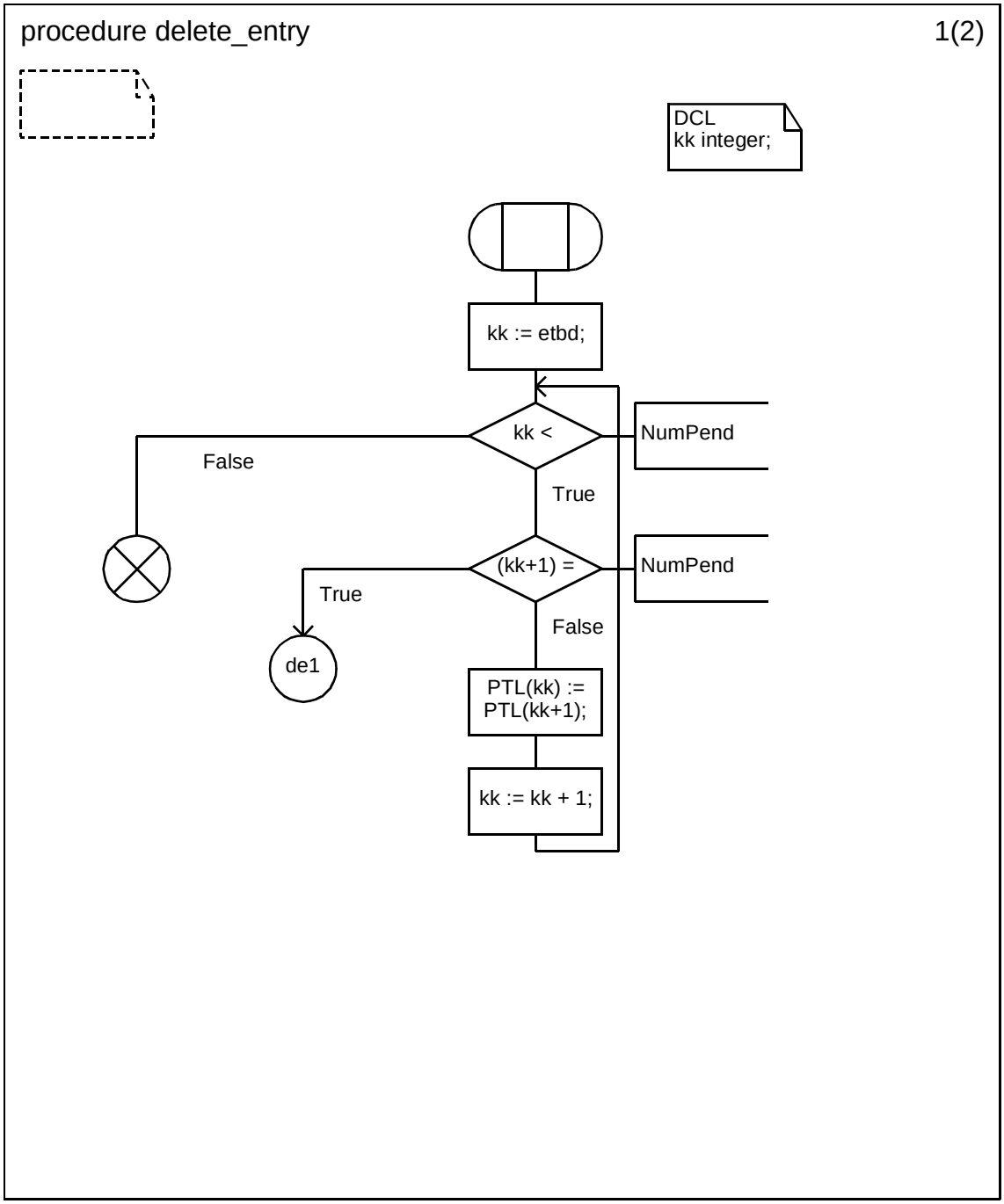



Copyright © 2003 IEEE. All rights reserved.
Authorized licensed use limited to: IEEE - Staff. Downloaded on October 28,2024 at 20:20:02 UTC from IEEE Xplore. Restrictions apply.

INTEL-1011
U.S. Patent 8,219,129

### D.3.1.154.122.5 Procedure delete_entry (2)

.

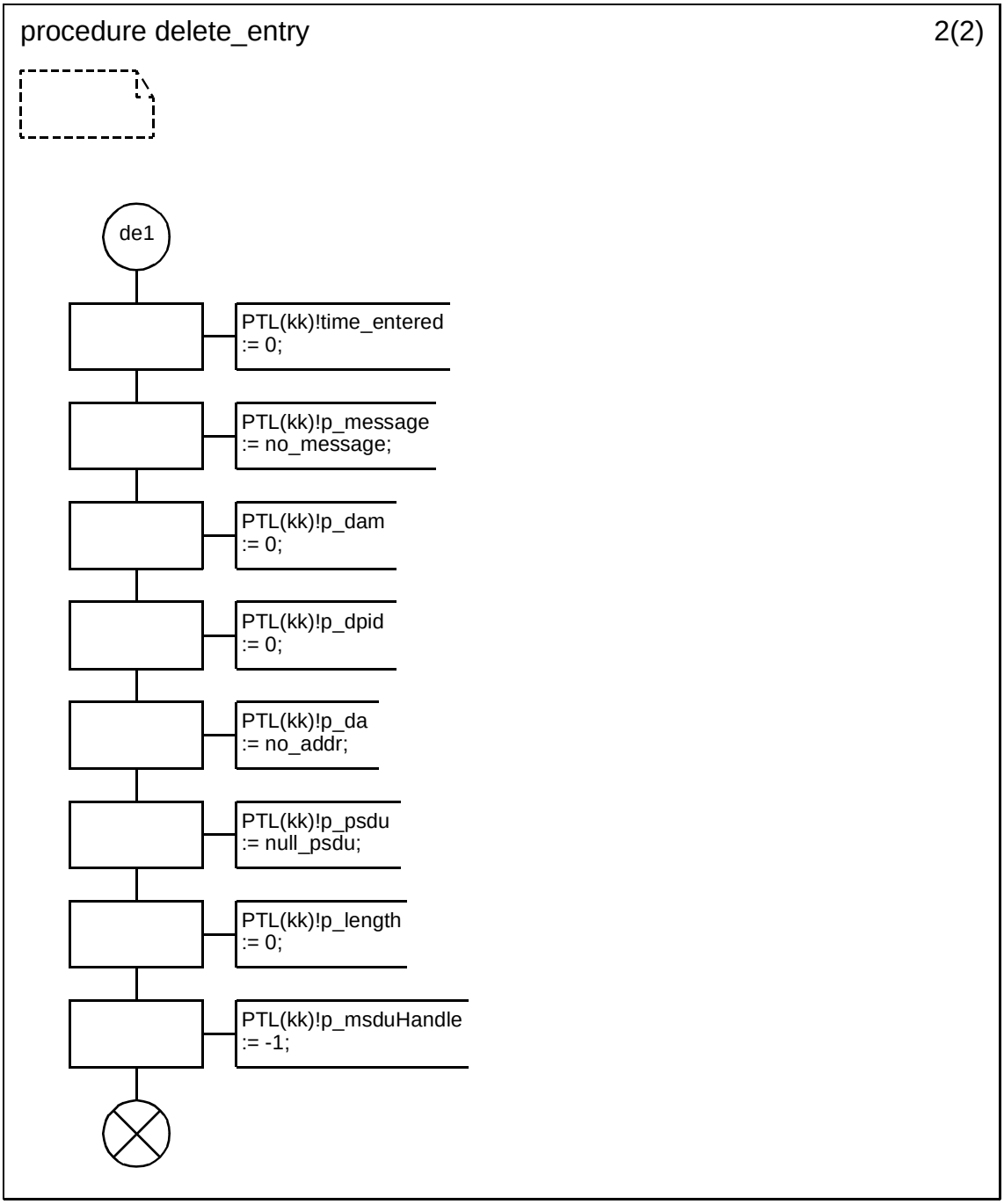


Copyright © 2003 IEEE. All rights reserved.

Authorized licensed use limited to: IEEE - Staff. Downloaded on October 28,2024 at 20:20:02 UTC from IEEE Xplore. Restrictions apply.

INTEL-1011
U.S. Patent 8,219,129

**D.3.1.154.122.6 Procedure check_entry_time (1)**

.

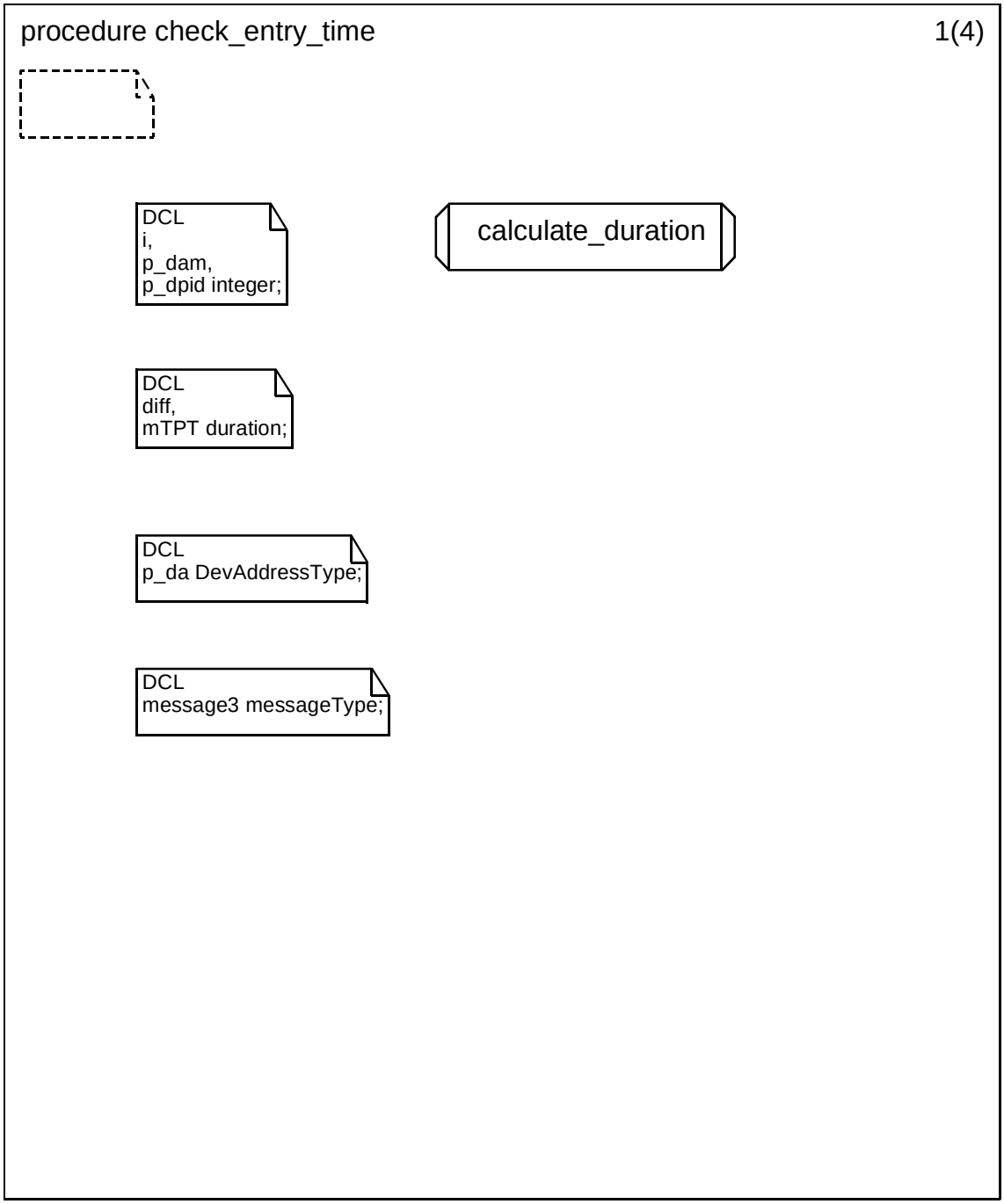



Copyright © 2003 IEEE. All rights reserved.
Authorized licensed use limited to: IEEE - Staff. Downloaded on October 28,2024 at 20:20:02 UTC from IEEE Xplore. Restrictions apply.

INTEL-1011
U.S. Patent 8,219,129

**D.3.1.154.122.7 Procedure check_entry_time (2)**

.

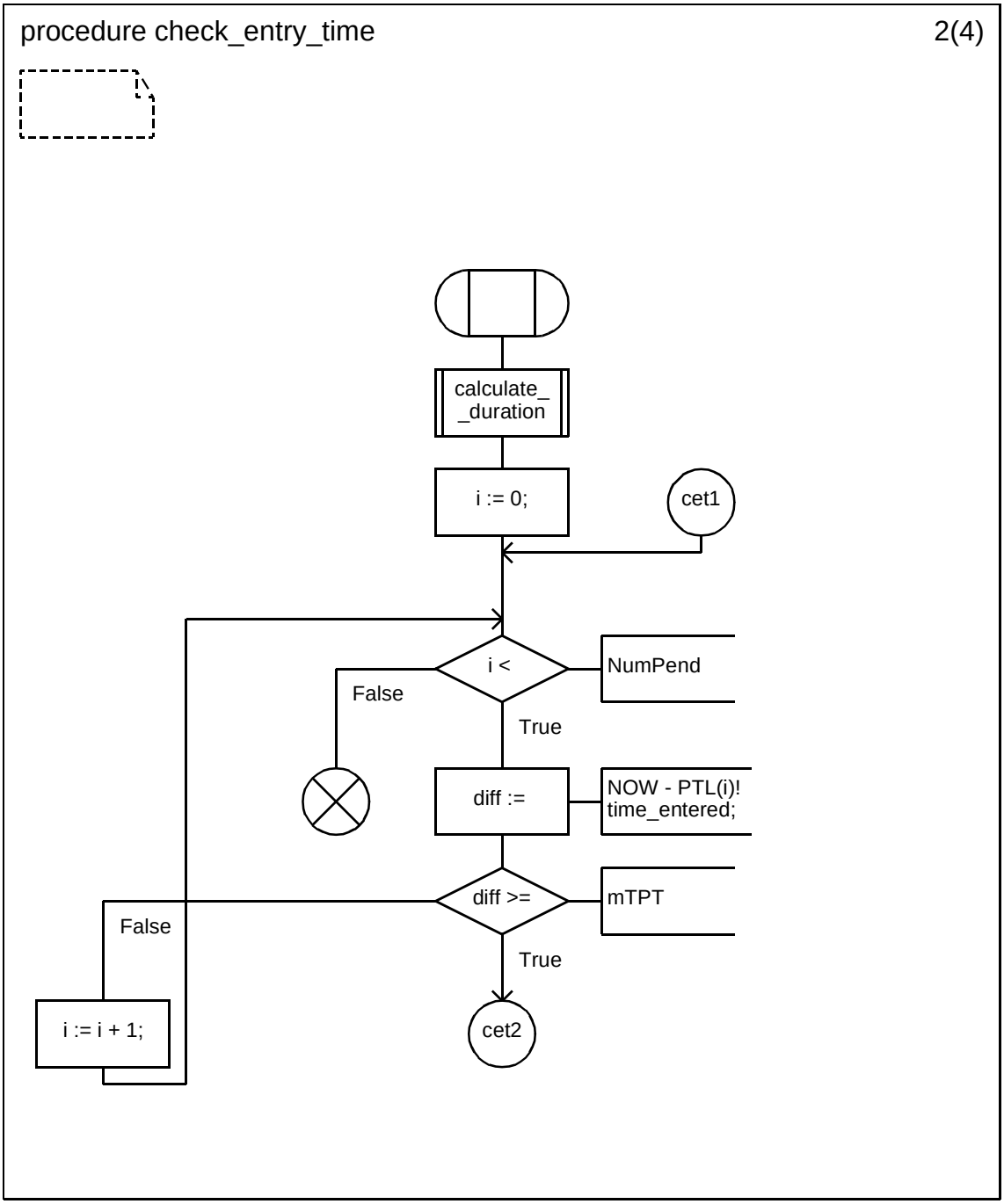


Copyright © 2003 IEEE. All rights reserved.

Authorized licensed use limited to: IEEE - Staff. Downloaded on October 28,2024 at 20:20:02 UTC from IEEE Xplore. Restrictions apply.

INTEL-1011
U.S. Patent 8,219,129

### D.3.1.154.122.8 Procedure check_entry_time (3)

.

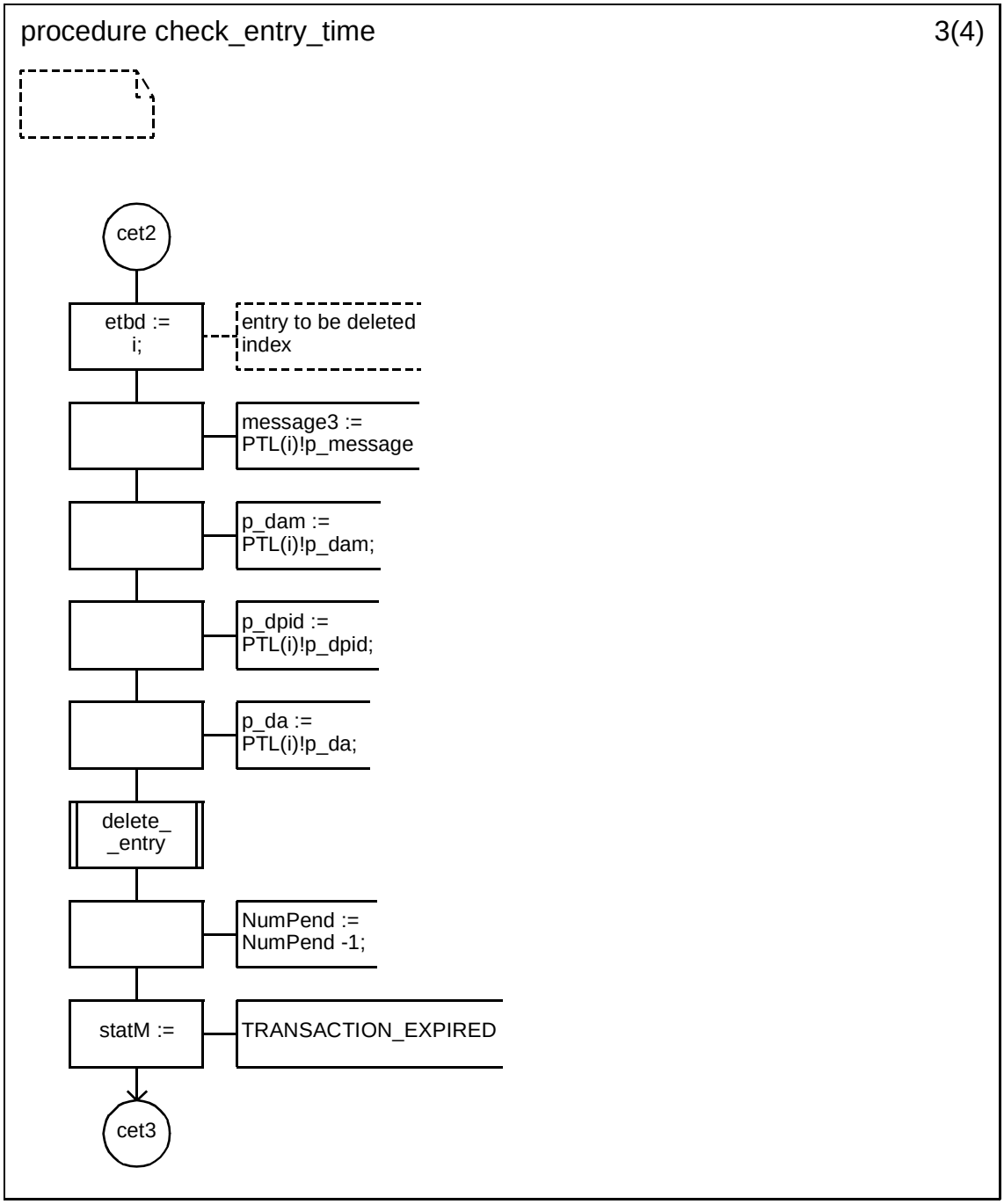



Copyright © 2003 IEEE. All rights reserved.
Authorized licensed use limited to: IEEE - Staff. Downloaded on October 28,2024 at 20:20:02 UTC from IEEE Xplore. Restrictions apply.

INTEL-1011
U.S. Patent 8,219,129

### D.3.1.154.122.9 Procedure check_entry_time (4)

.

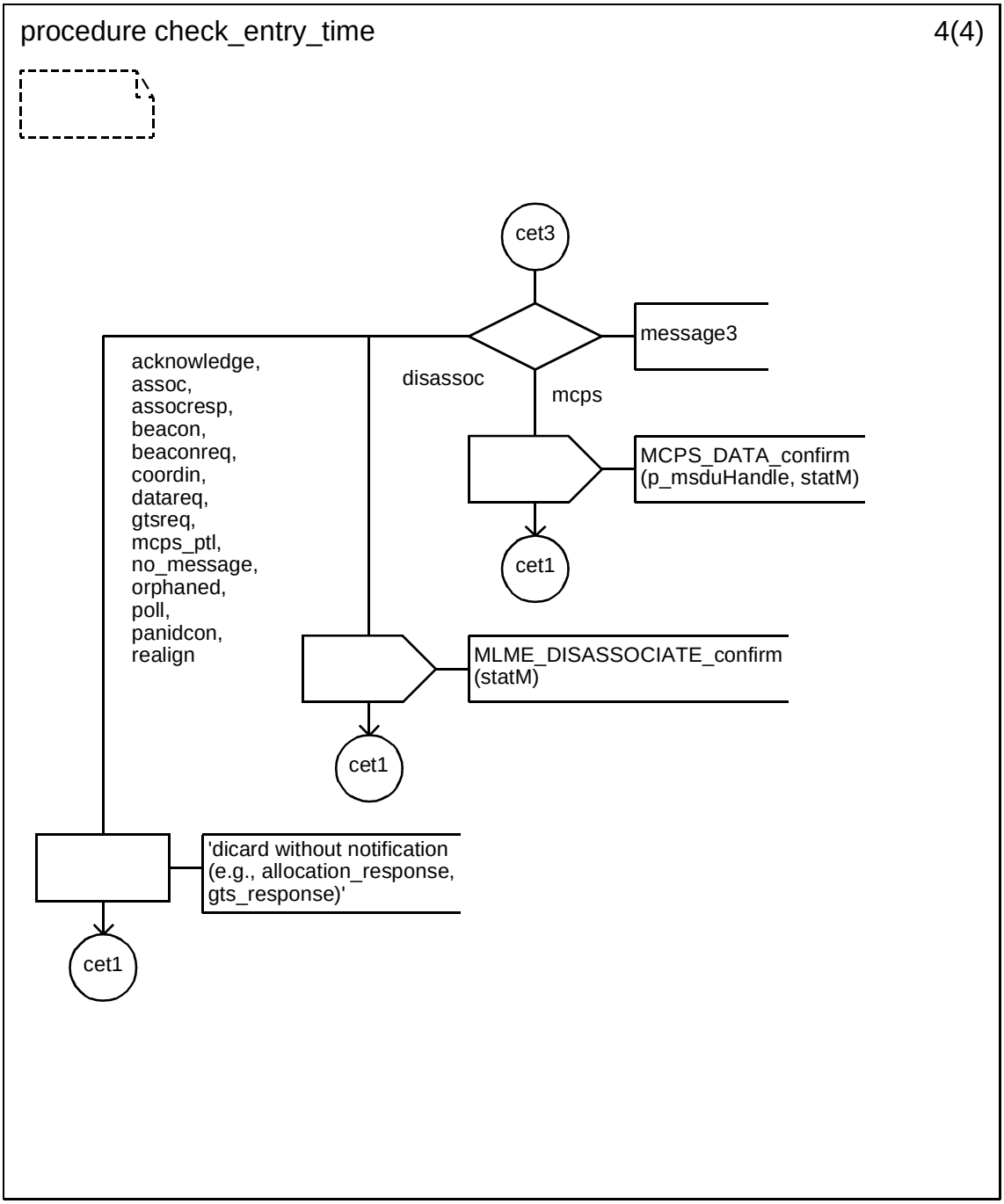


Copyright © 2003 IEEE. All rights reserved.

Authorized licensed use limited to: IEEE - Staff. Downloaded on October 28,2024 at 20:20:02 UTC from IEEE Xplore. Restrictions apply.

INTEL-1011
U.S. Patent 8,219,129

### D.3.1.154.122.10 Procedure calculate_duration

.

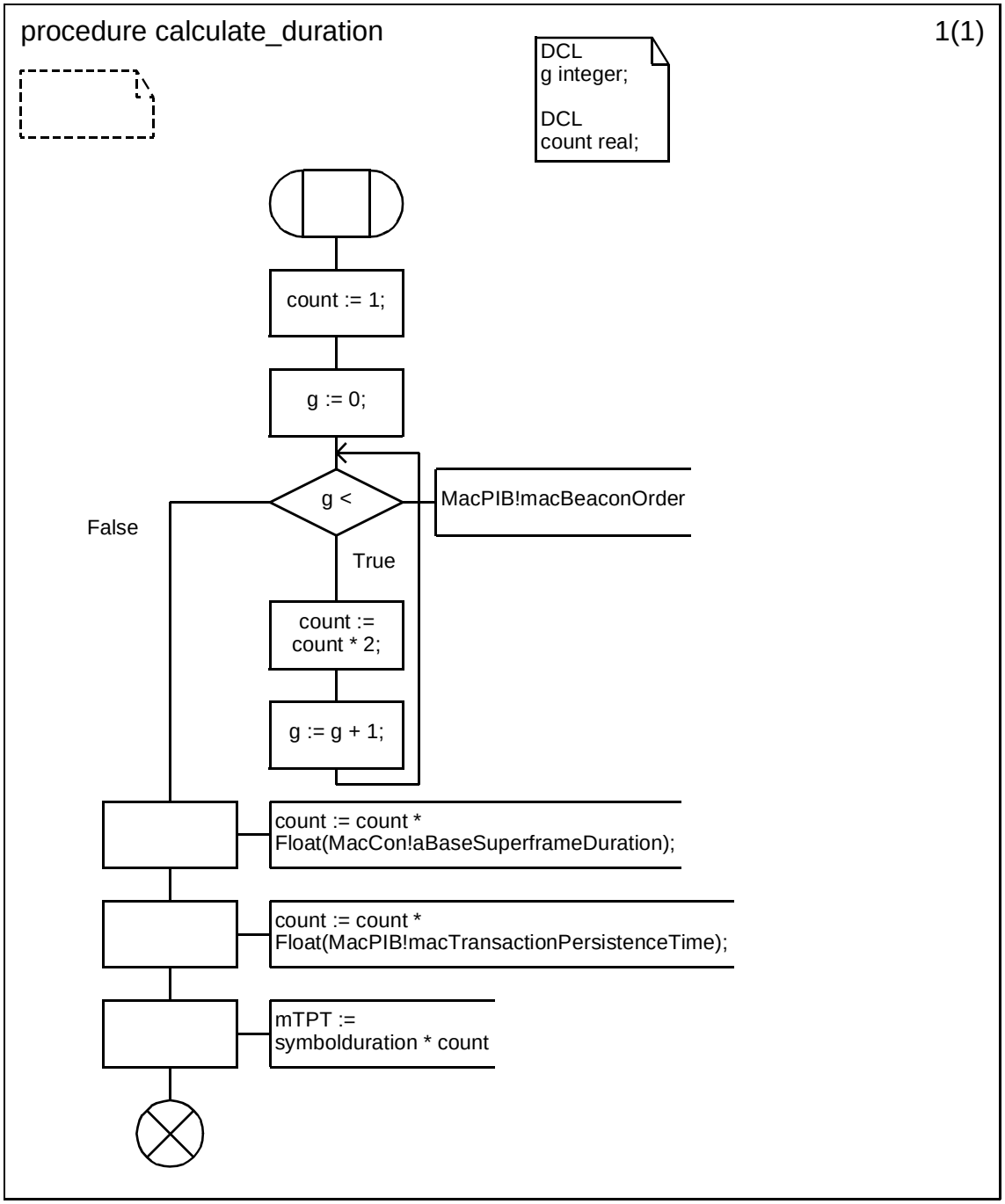



Copyright © 2003 IEEE. All rights reserved.
Authorized licensed use limited to: IEEE - Staff. Downloaded on October 28,2024 at 20:20:02 UTC from IEEE Xplore. Restrictions apply.

INTEL-1011
U.S. Patent 8,219,129

### D.3.1.154.123 Procedure check_entry_msduHandle

.

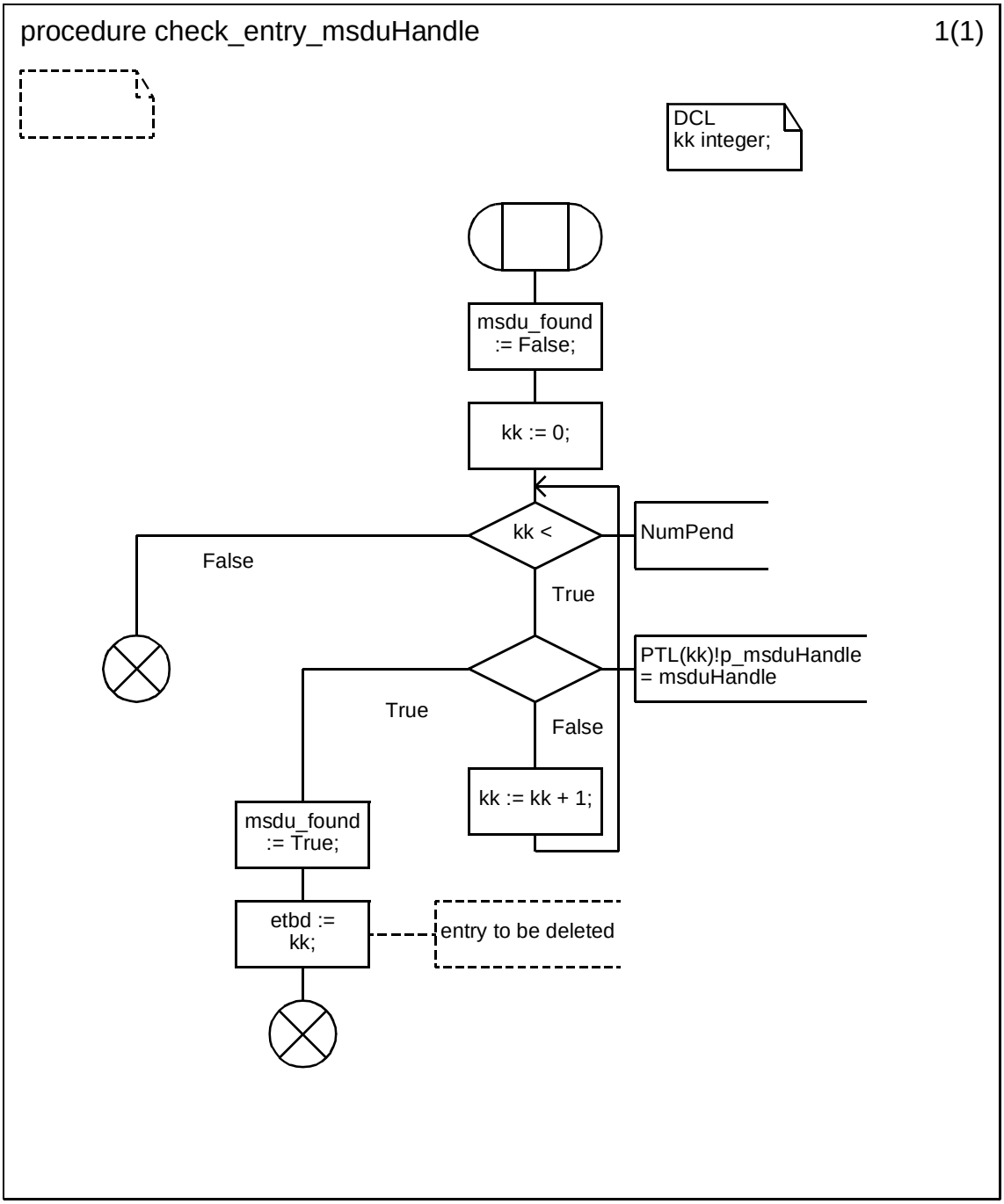


Copyright © 2003 IEEE. All rights reserved.

Authorized licensed use limited to: IEEE - Staff. Downloaded on October 28,2024 at 20:20:02 UTC from IEEE Xplore. Restrictions apply.

INTEL-1011
U.S. Patent 8,219,129

**D.3.1.154.124 Procedure select_response (1)**

.

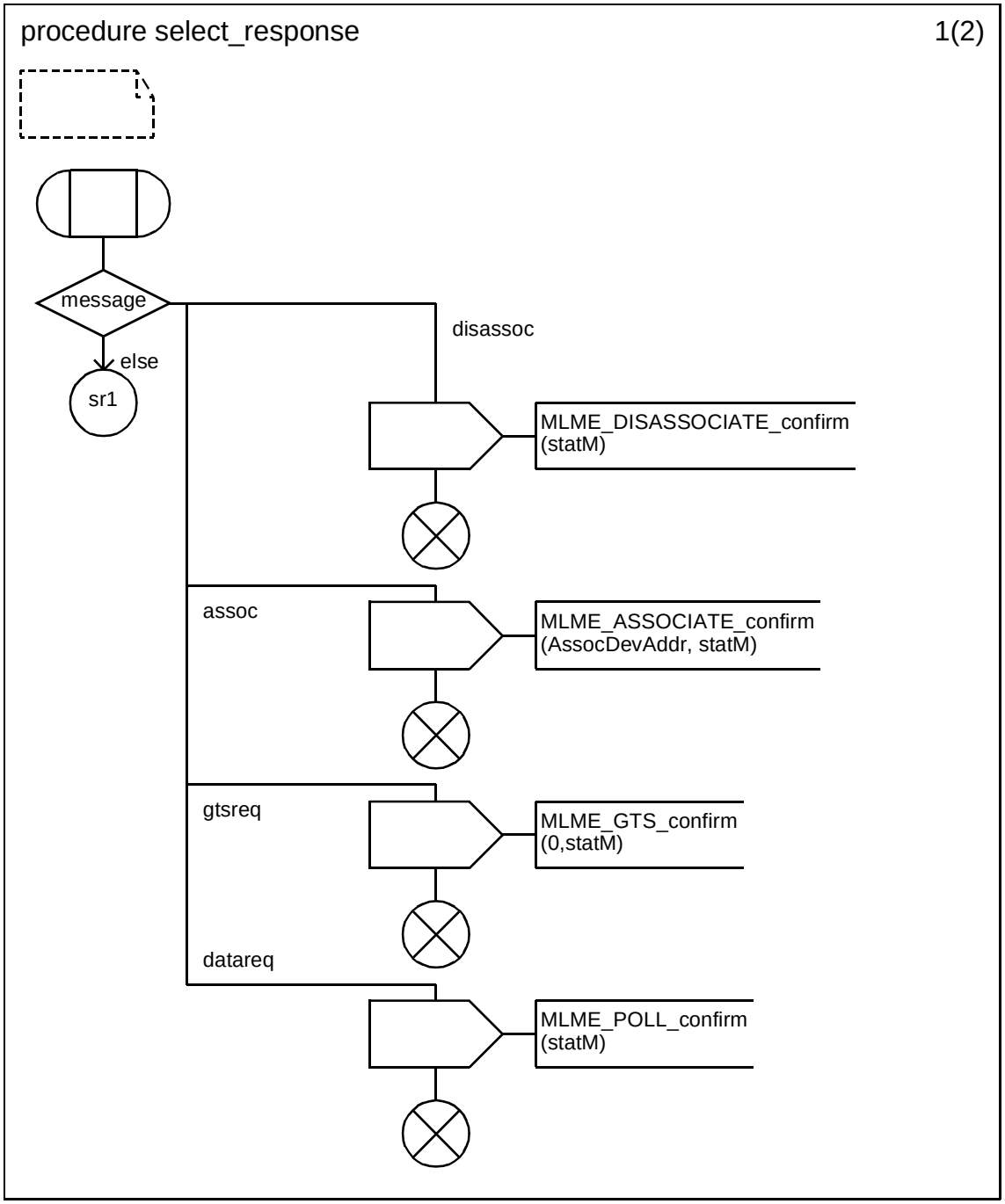



Copyright © 2003 IEEE. All rights reserved.
Authorized licensed use limited to: IEEE - Staff. Downloaded on October 28,2024 at 20:20:02 UTC from IEEE Xplore. Restrictions apply.

INTEL-1011
U.S. Patent 8,219,129

**D.3.1.154.125 Procedure select_response (2)**

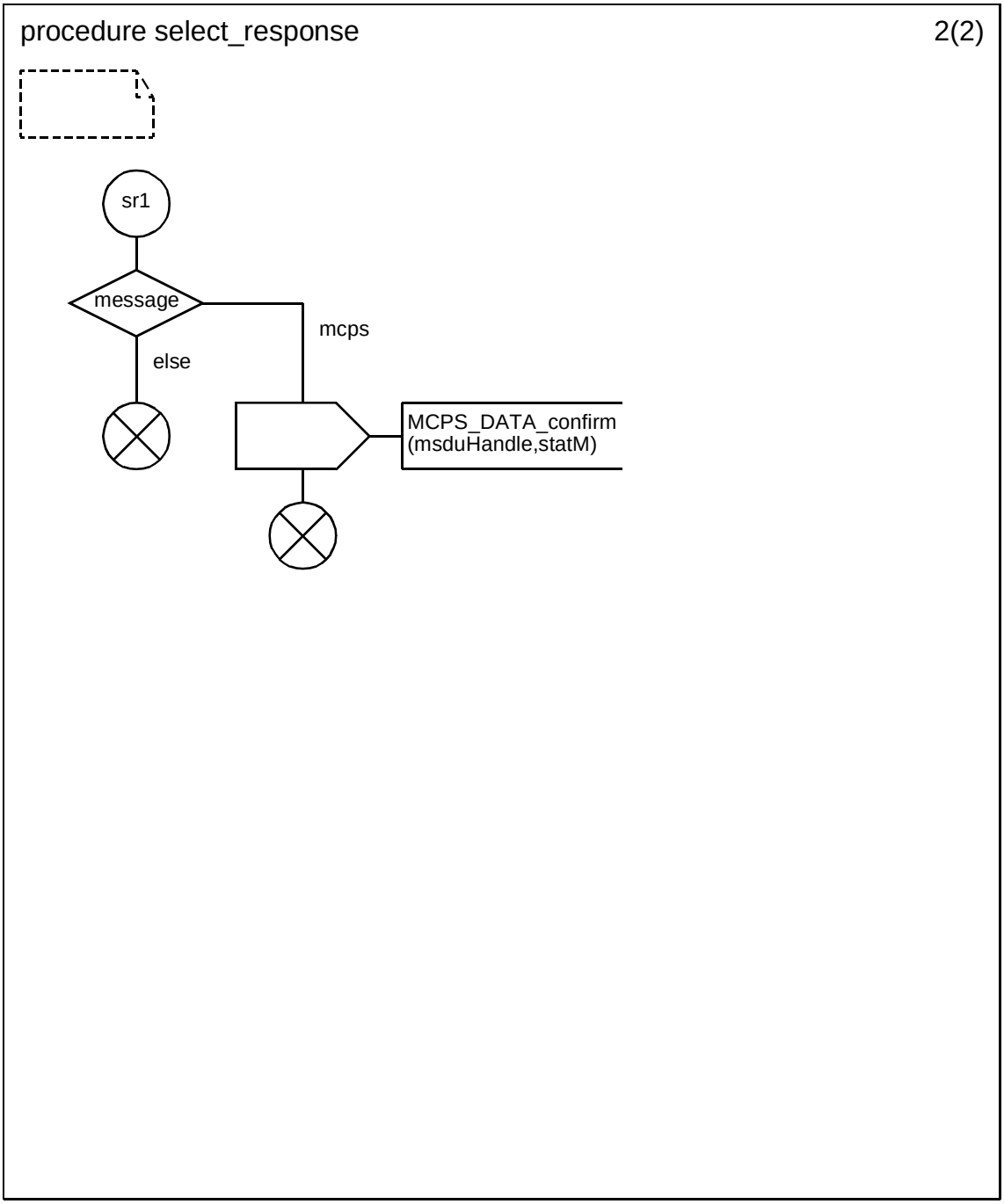


Copyright © 2003 IEEE. All rights reserved.

Authorized licensed use limited to: IEEE - Staff. Downloaded on October 28,2024 at 20:20:02 UTC from IEEE Xplore. Restrictions apply.

INTEL-1011
U.S. Patent 8,219,129

### D.3.1.154.126 Procedure set_backoff_timer

.

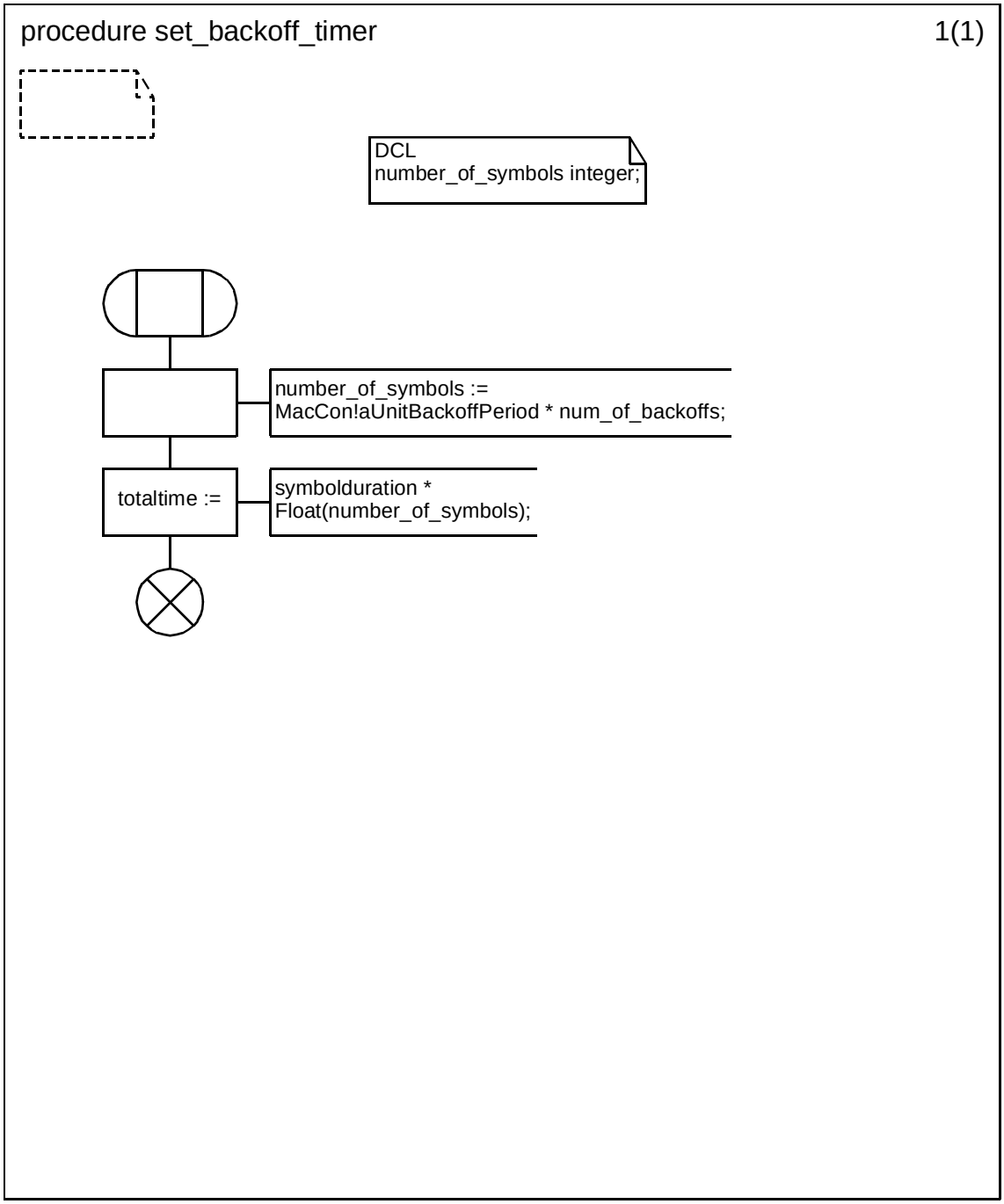



Copyright © 2003 IEEE. All rights reserved.
Authorized licensed use limited to: IEEE - Staff. Downloaded on October 28,2024 at 20:20:02 UTC from IEEE Xplore. Restrictions apply.

INTEL-1011
U.S. Patent 8,219,129

### D.3.1.154.127 Procedure set_beacon_interval

.

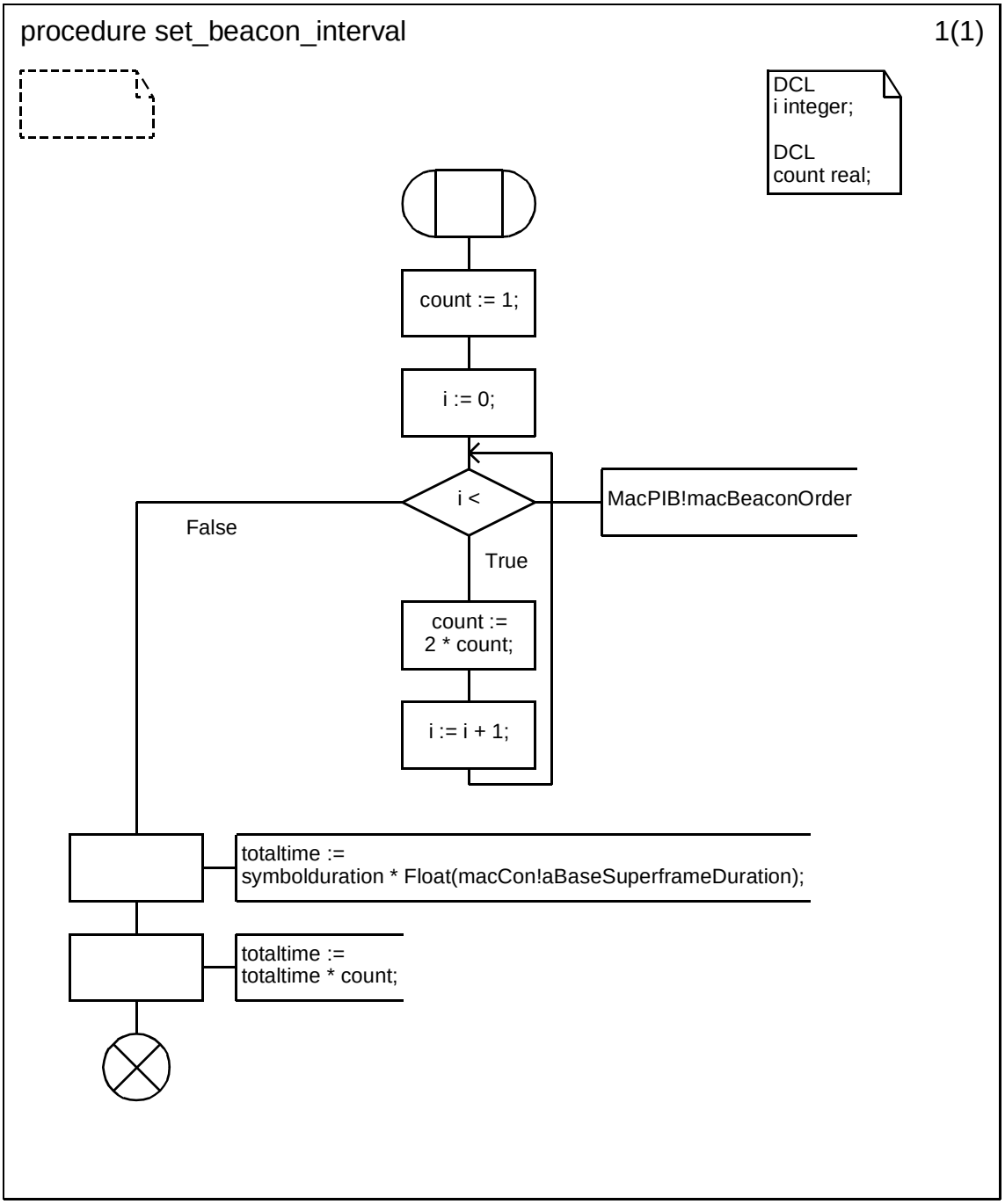


Copyright © 2003 IEEE. All rights reserved.

Authorized licensed use limited to: IEEE - Staff. Downloaded on October 28,2024 at 20:20:02 UTC from IEEE Xplore. Restrictions apply.

INTEL-1011
U.S. Patent 8,219,129

**D.3.1.154.128 Procedure set_beacon_scan_interval**

.

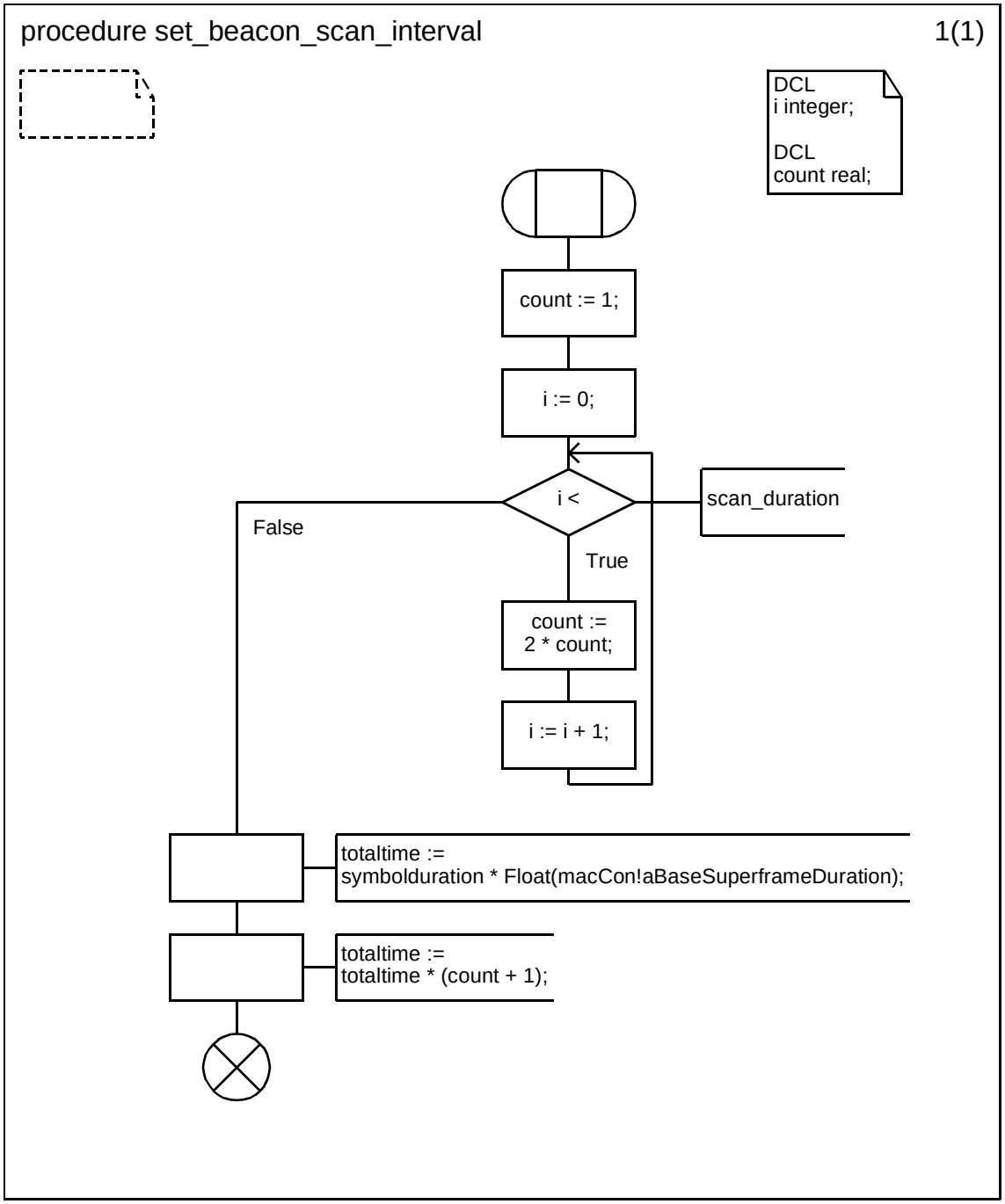



Copyright © 2003 IEEE. All rights reserved.
Authorized licensed use limited to: IEEE - Staff. Downloaded on October 28,2024 at 20:20:02 UTC from IEEE Xplore. Restrictions apply.

INTEL-1011
U.S. Patent 8,219,129

### D.3.1.154.129 Procedure set_beacon_search_period

.

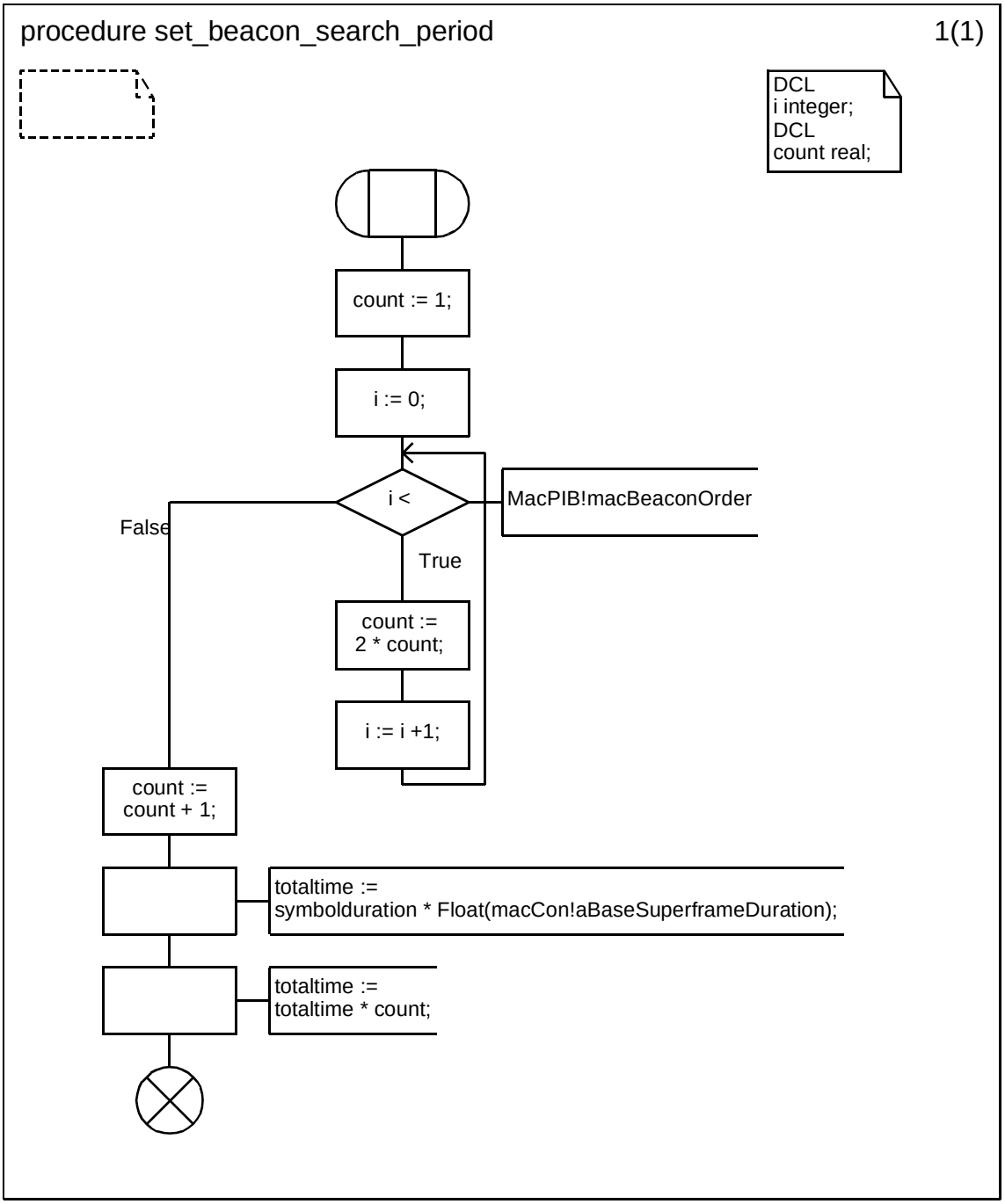


Copyright © 2003 IEEE. All rights reserved.

Authorized licensed use limited to: IEEE - Staff. Downloaded on October 28,2024 at 20:20:02 UTC from IEEE Xplore. Restrictions apply.

INTEL-1011
U.S. Patent 8,219,129

### D.3.1.154.130 Procedure set_beacon_track_period

.

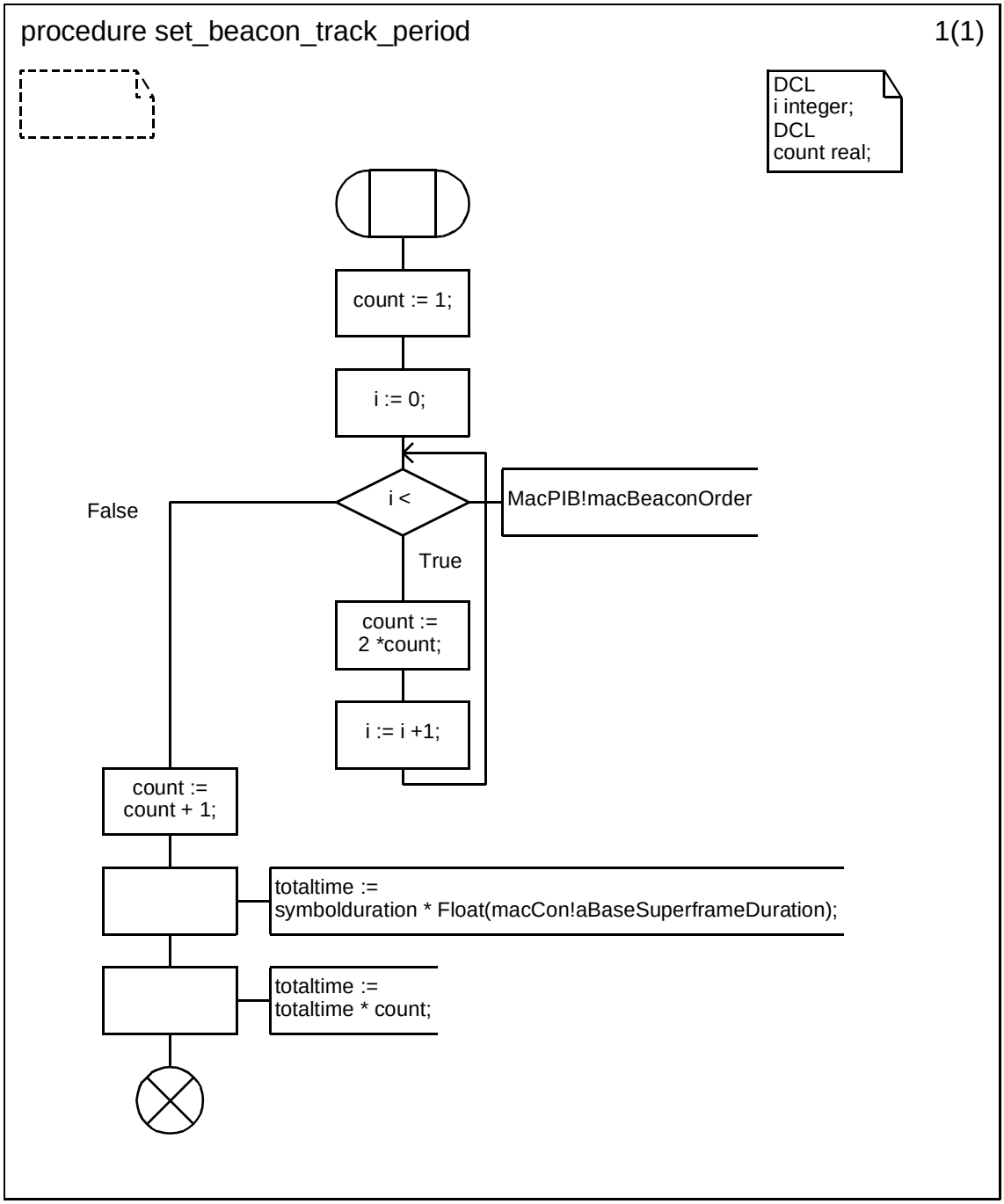



Copyright © 2003 IEEE. All rights reserved.
Authorized licensed use limited to: IEEE - Staff. Downloaded on October 28,2024 at 20:20:02 UTC from IEEE Xplore. Restrictions apply.

INTEL-1011
U.S. Patent 8,219,129

### D.3.1.154.131 Procedure set_defer_interval

.

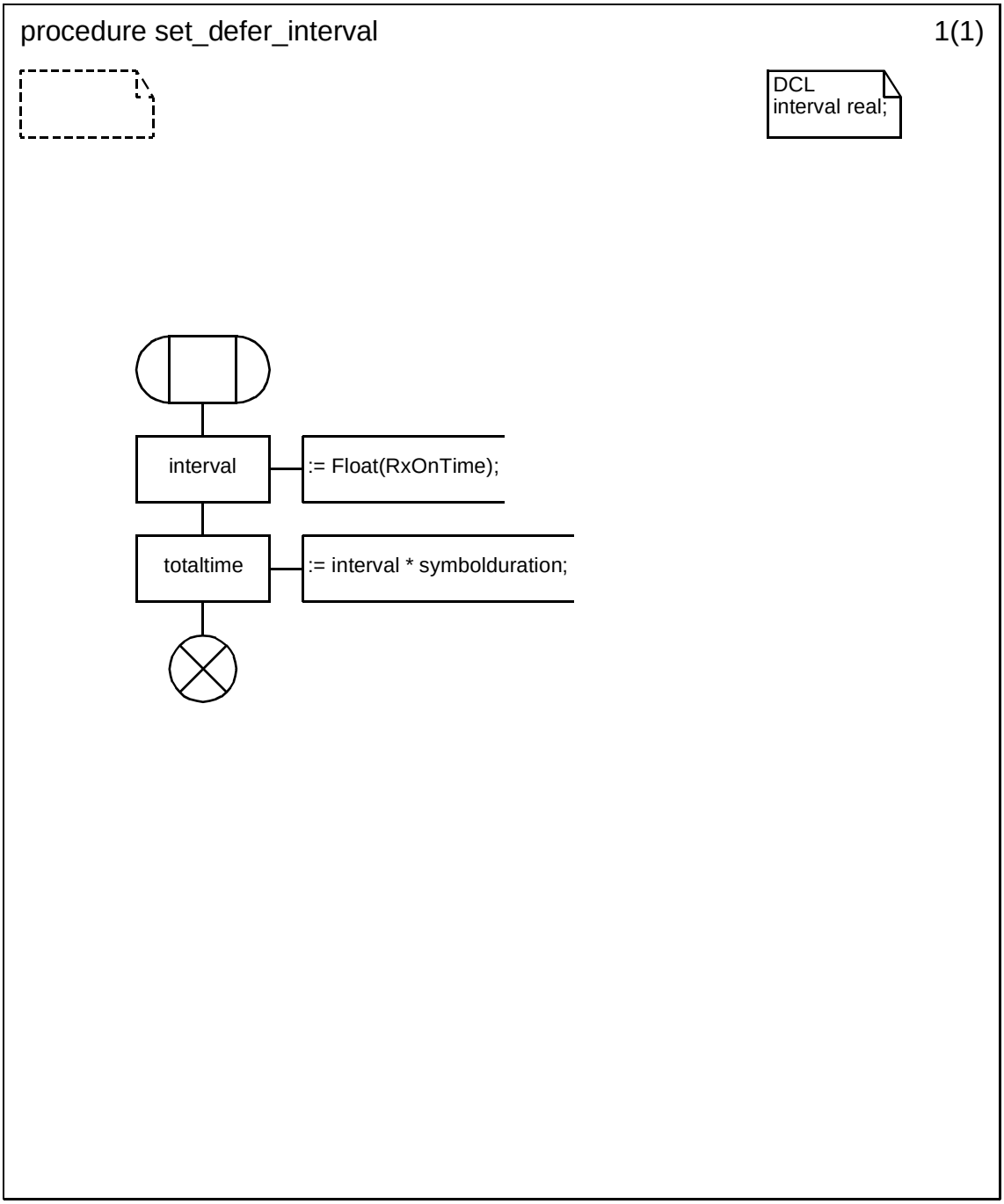


Copyright © 2003 IEEE. All rights reserved.

Authorized licensed use limited to: IEEE - Staff. Downloaded on October 28,2024 at 20:20:02 UTC from IEEE Xplore. Restrictions apply.

INTEL-1011
U.S. Patent 8,219,129

### D.3.1.154.132 Procedure set_frame_response_time

.

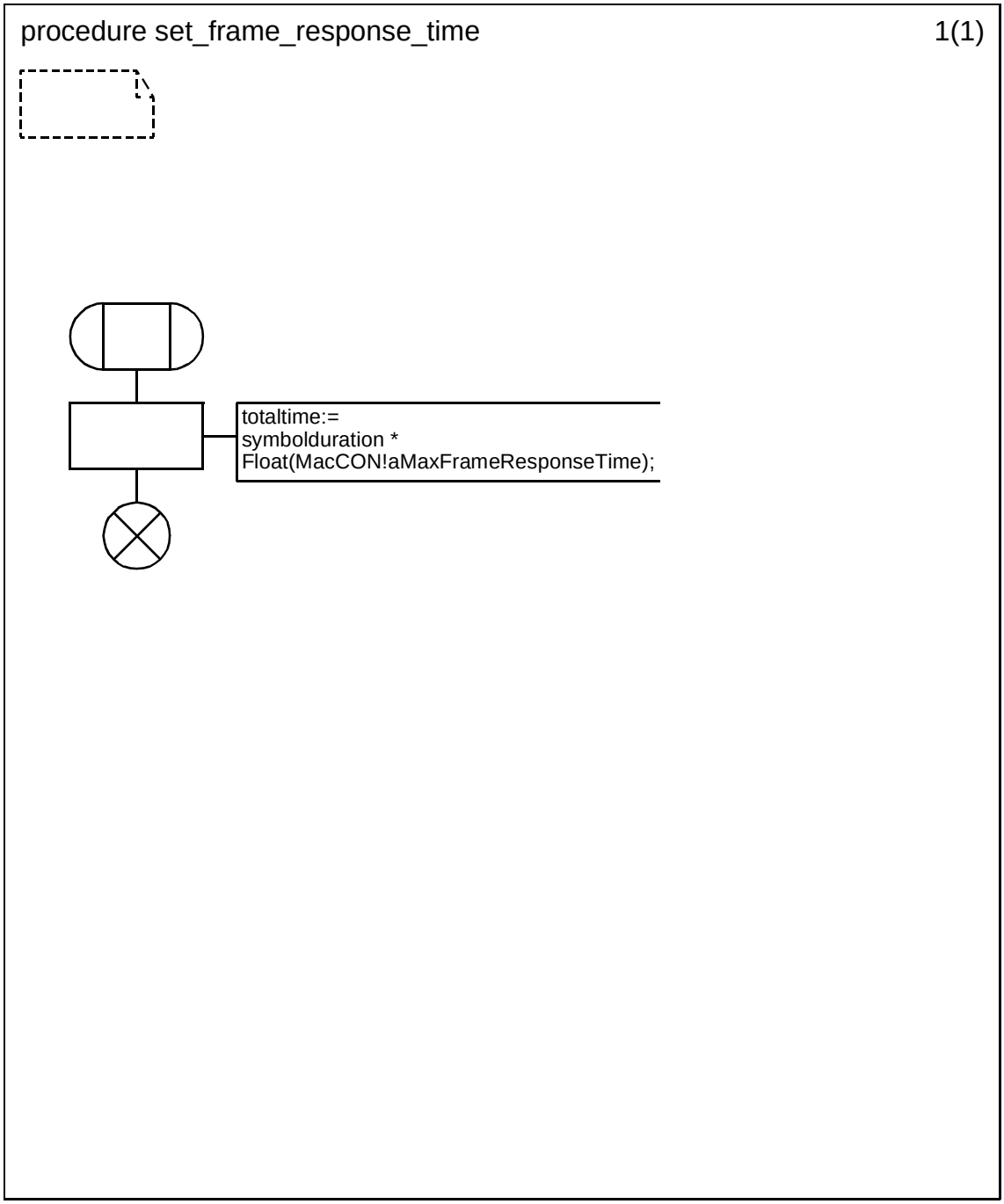



Copyright © 2003 IEEE. All rights reserved.
Authorized licensed use limited to: IEEE - Staff. Downloaded on October 28,2024 at 20:20:02 UTC from IEEE Xplore. Restrictions apply.

INTEL-1011
U.S. Patent 8,219,129

### D.3.1.154.133 Procedure set_RxOn_interval

.

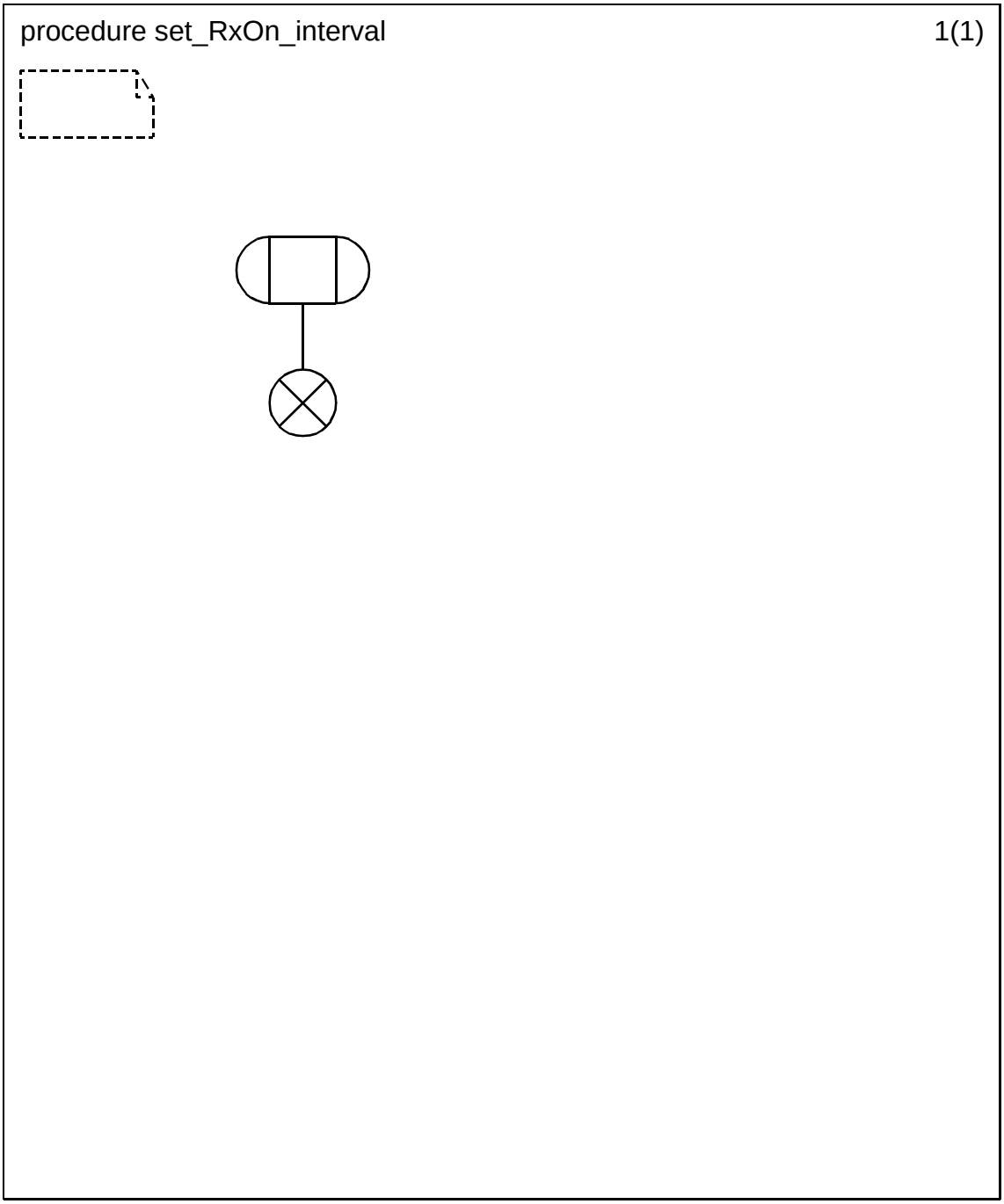


Copyright © 2003 IEEE. All rights reserved.

Authorized licensed use limited to: IEEE - Staff. Downloaded on October 28,2024 at 20:20:02 UTC from IEEE Xplore. Restrictions apply.

INTEL-1011
U.S. Patent 8,219,129

**D.3.1.154.134 Procedure set_superframe_interval**

.

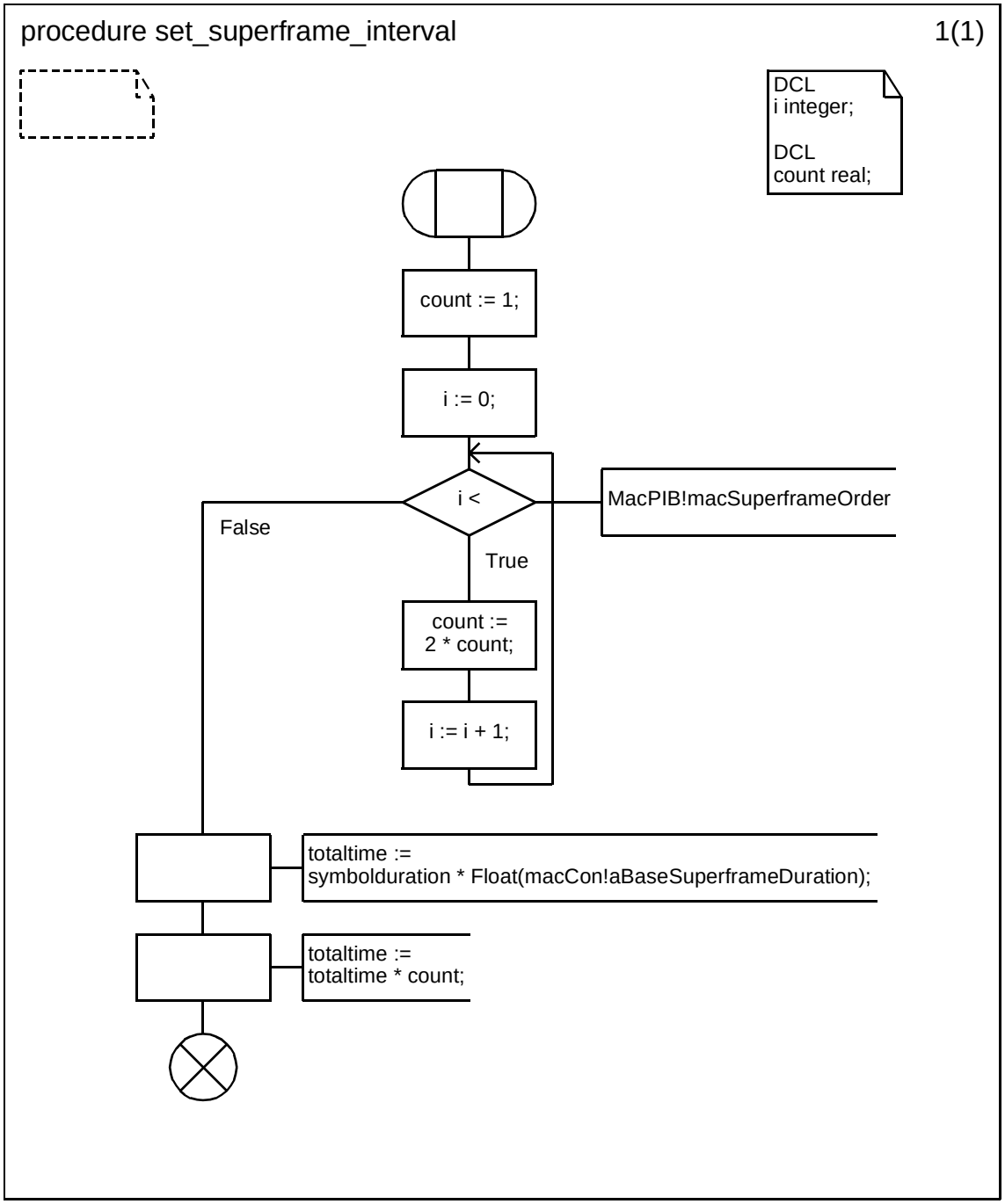



Copyright © 2003 IEEE. All rights reserved.
Authorized licensed use limited to: IEEE - Staff. Downloaded on October 28,2024 at 20:20:02 UTC from IEEE Xplore. Restrictions apply.

INTEL-1011
U.S. Patent 8,219,129

### D.3.1.154.134.1 Procedure apply_security (1)

.

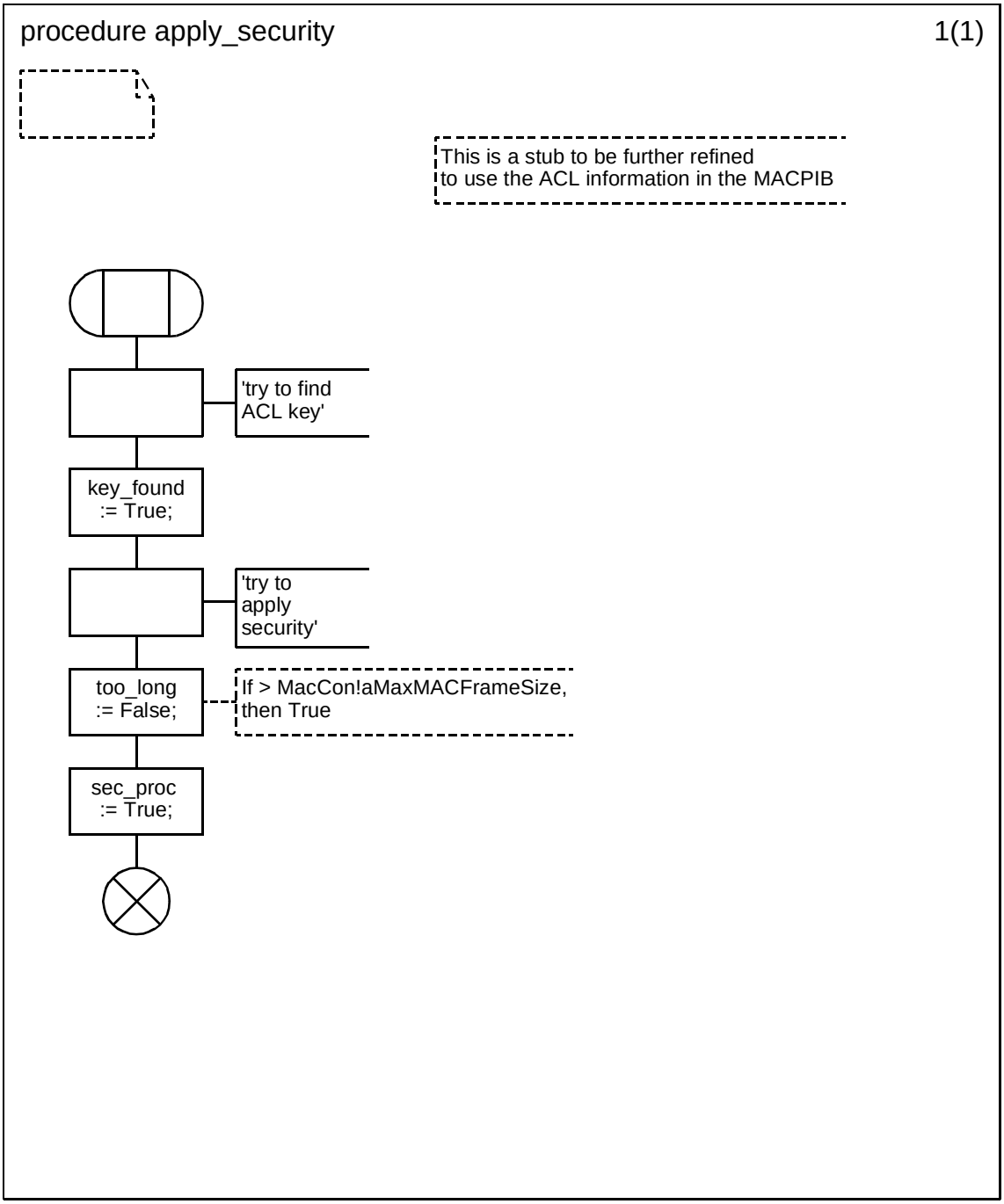


Copyright © 2003 IEEE. All rights reserved.

Authorized licensed use limited to: IEEE - Staff. Downloaded on October 28,2024 at 20:20:02 UTC from IEEE Xplore. Restrictions apply.

INTEL-1011
U.S. Patent 8,219,129

### D.3.1.154.134.2 Procedure check_ACL

.

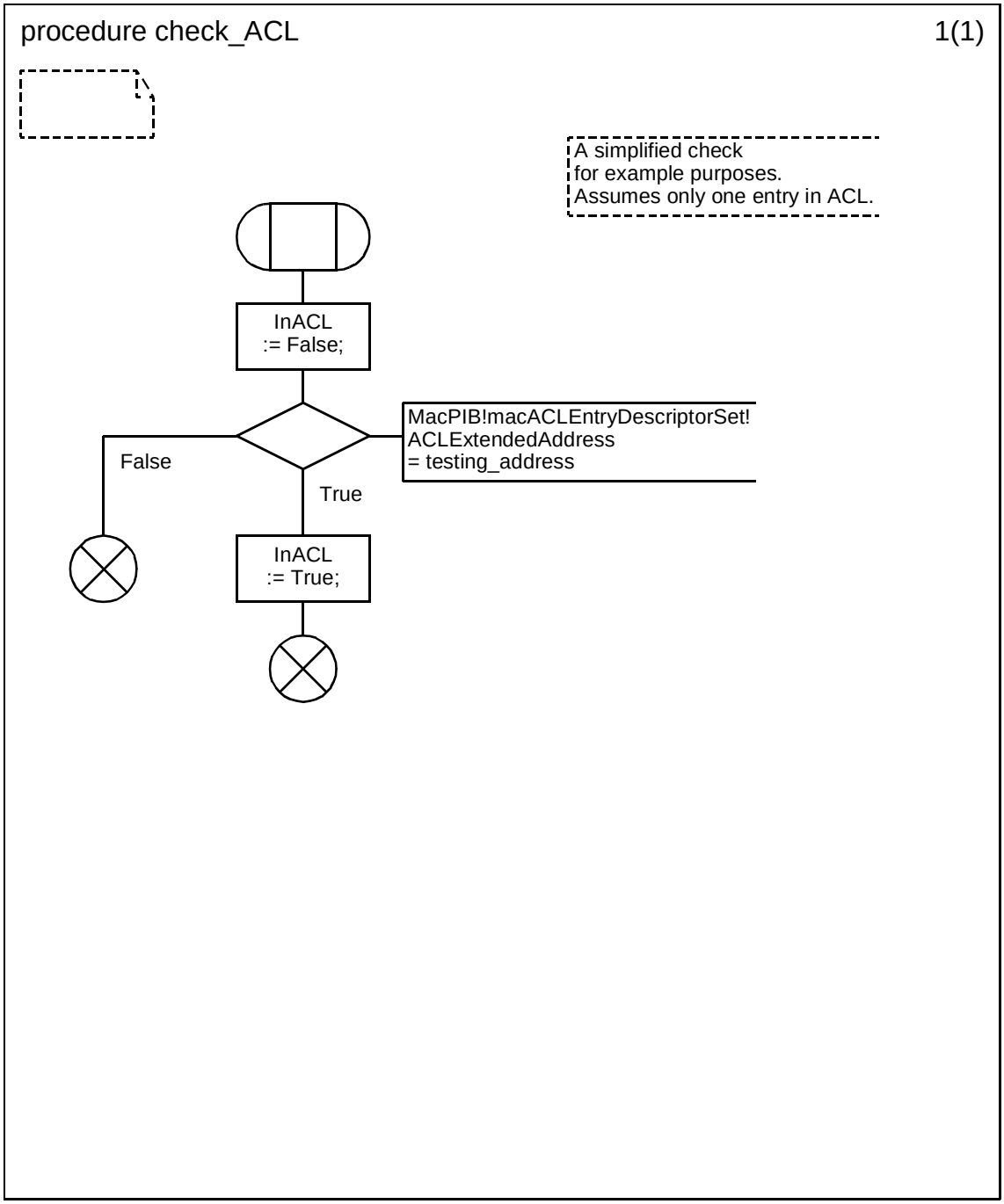



Copyright © 2003 IEEE. All rights reserved.
Authorized licensed use limited to: IEEE - Staff. Downloaded on October 28,2024 at 20:20:02 UTC from IEEE Xplore. Restrictions apply.

INTEL-1011
U.S. Patent 8,219,129

### D.3.1.154.134.3 Procedure decode_security

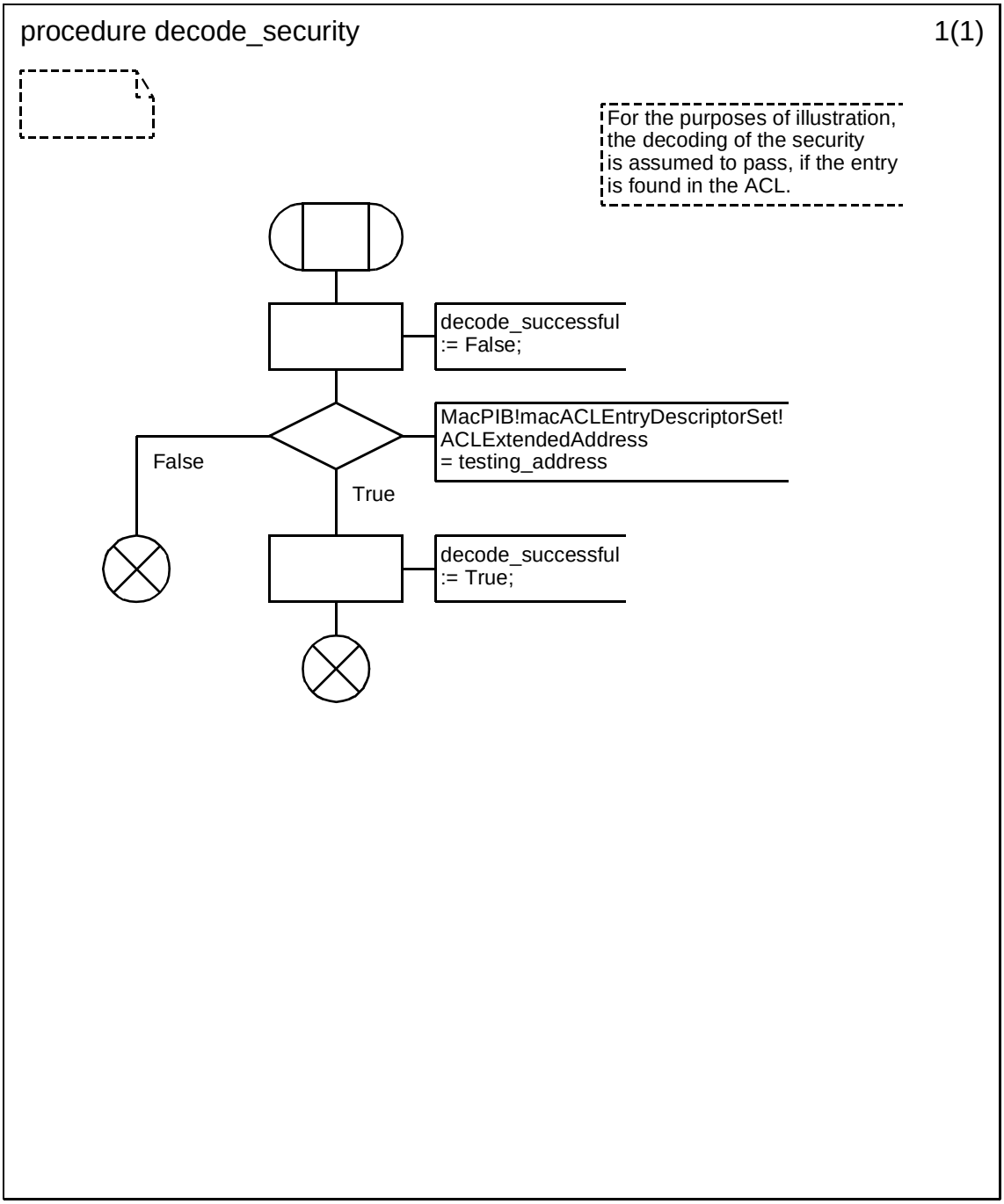


Copyright © 2003 IEEE. All rights reserved.

Authorized licensed use limited to: IEEE - Staff. Downloaded on October 28,2024 at 20:20:02 UTC from IEEE Xplore. Restrictions apply.

INTEL-1011
U.S. Patent 8,219,129

**D.3.1.154.134.4 Procedure test_parameters (1)**

.

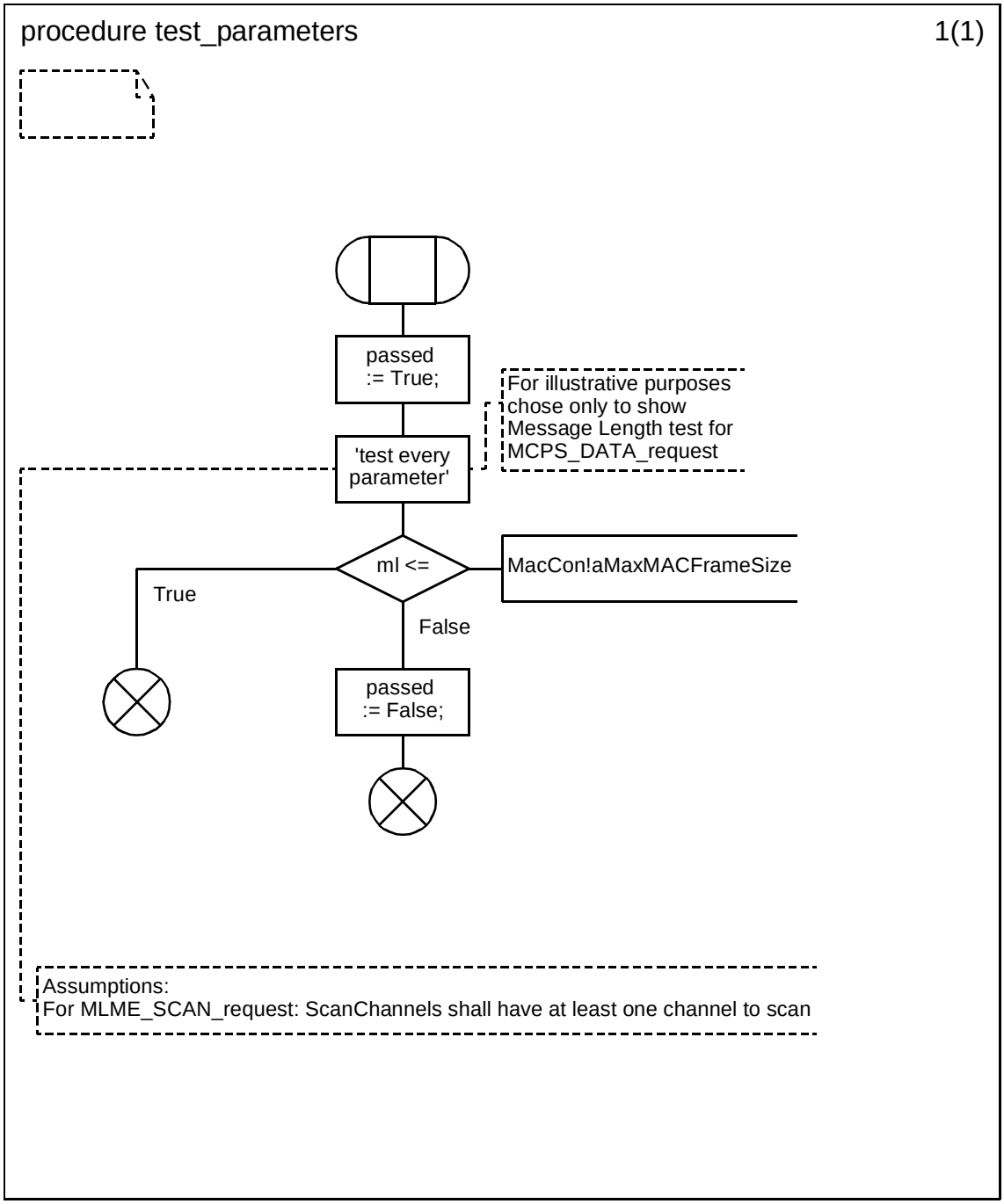



Copyright © 2003 IEEE. All rights reserved.
Authorized licensed use limited to: IEEE - Staff. Downloaded on October 28,2024 at 20:20:02 UTC from IEEE Xplore. Restrictions apply.

INTEL-1011
U.S. Patent 8,219,129

### D.3.1.154.134.5 Procedure update_unscanned

.

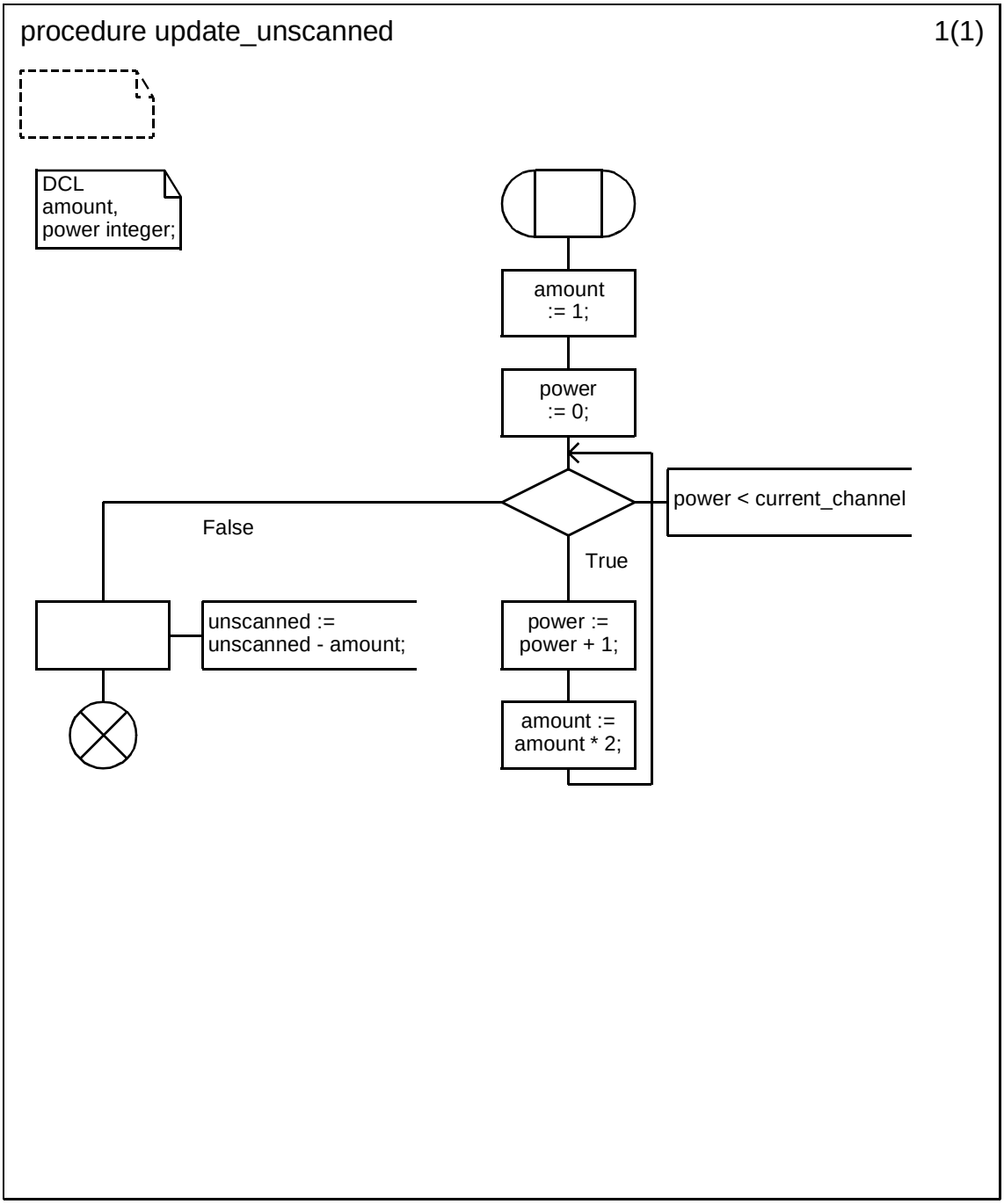


Copyright © 2003 IEEE. All rights reserved.

Authorized licensed use limited to: IEEE - Staff. Downloaded on October 28,2024 at 20:20:02 UTC from IEEE Xplore. Restrictions apply.

INTEL-1011
U.S. Patent 8,219,129

## D.4 Signal definition package

This package defines the various signals, signallists, and frame types (i.e., in newtypes and syntypes in SDL) that are used by the other packages and system model


Copyright © 2003 IEEE. All rights reserved.
Authorized licensed use limited to: IEEE - Staff. Downloaded on October 28,2024 at 20:20:02 UTC from IEEE Xplore. Restrictions apply.

INTEL-1011
U.S. Patent 8,219,129

### D.4.1 Signal definition package (1)

.

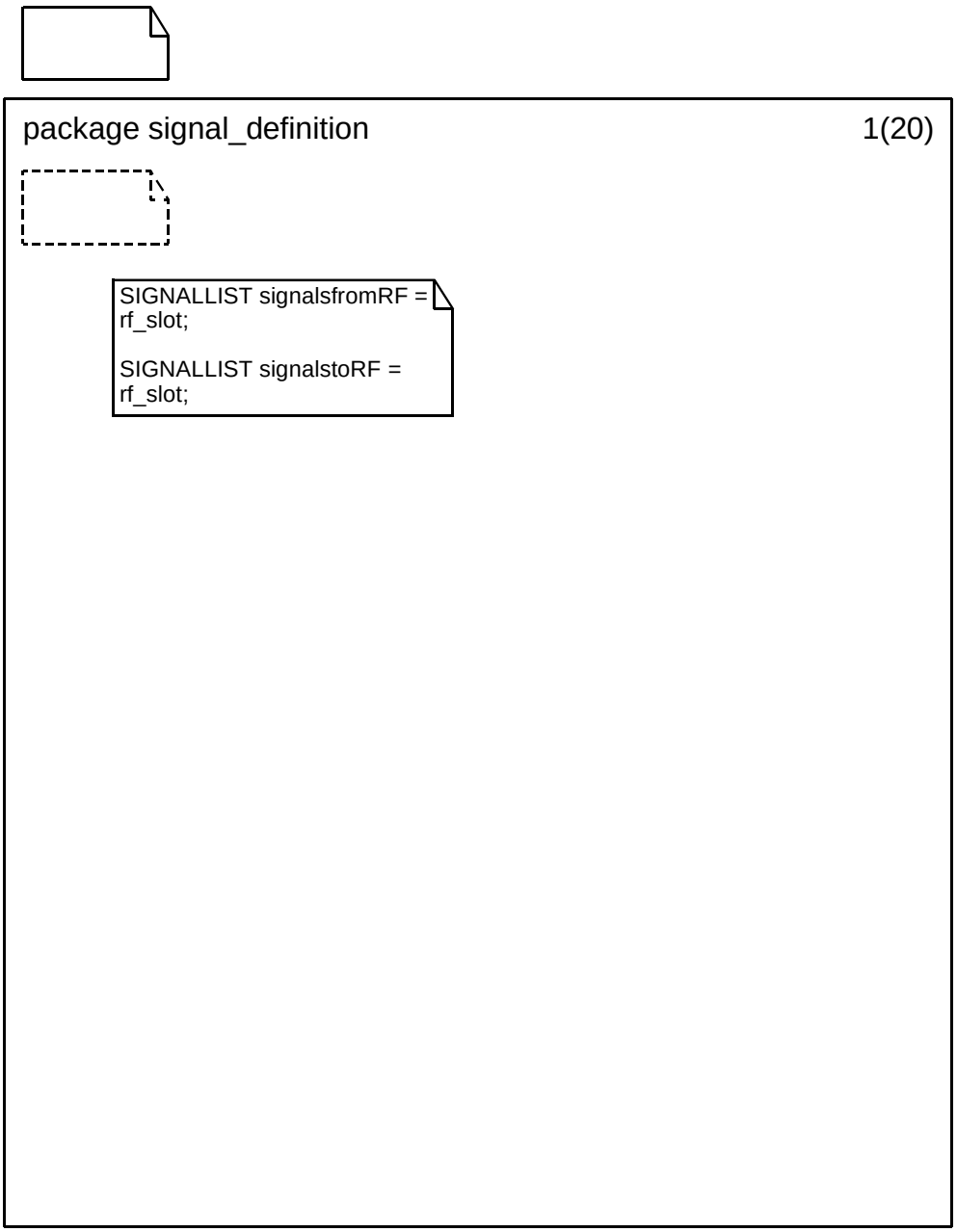


Copyright © 2003 IEEE. All rights reserved.

Authorized licensed use limited to: IEEE - Staff. Downloaded on October 28,2024 at 20:20:02 UTC from IEEE Xplore. Restrictions apply.

INTEL-1011
U.S. Patent 8,219,129

### D.4.2 Signal definition package (2)

.

package signal_definition 2(20)

```
SIGNALLIST primfromMCPS =
MCPS_DATA_confirm,
MCPS_DATA_indication,
MCPS_PURGE_confirm;

SIGNALLIST primfromMLME =
MLME_ASSOCIATE_indication,
MLME_ASSOCIATE_confirm,
MLME_BEACON_NOTIFY_indication,
MLME_DISASSOCIATE_indication,
MLME_DISASSOCIATE_confirm,
MLME_GET_confirm,
MLME_GTS_indication,
MLME_GTS_confirm,
MLME_ORPHAN_indication,
MLME_POLL_confirm,
MLME_RESET_confirm,
MLME_RX_ENABLE_confirm,
MLME_SCAN_confirm,
MLME_SET_confirm,
MLME_COMM_STATUS_indication,
MLME_START_confirm,
MLME_SYNC_LOSS_indication;

SIGNALLIST primtoMCPS =
MCPS_DATA_request,
MCPS_PURGE_request;

SIGNALLIST primtoMLME =
MLME_ASSOCIATE_request,
MLME_ASSOCIATE_response,
MLME_DISASSOCIATE_request,
MLME_GET_request,
MLME_GTS_request,
MLME_ORPHAN_response,
MLME_POLL_request,
MLME_RESET_request,
MLME_RX_ENABLE_request,
MLME_SCAN_request,
MLME_SET_request,
MLME_START_request,
MLME_SYNC_request;
```


Copyright © 2003 IEEE. All rights reserved.
Authorized licensed use limited to: IEEE - Staff. Downloaded on October 28,2024 at 20:20:02 UTC from IEEE Xplore. Restrictions apply.

INTEL-1011
U.S. Patent 8,219,129

### D.4.3 Signal definition package (3)

package signal_definition 3(20)

```
SIGNAL
MCPS_DATA_request(Integer,Integer,DevAddressType,
                  Integer,Integer,DevAddressType,
                  Integer, SetofBytes,msduHandleType,Bitmap),
MCPS_DATA_confirm(msduHandleType,statusMType),
MCPS_DATA_indication(Integer,Integer,DevAddressType,
                     Integer,Integer,DevAddressType,
                     Integer,SetofBytes,Integer,Boolean,Boolean),
MCPS_PURGE_request(msduHandleType),
MCPS_PURGE_confirm(msduHandleType,purgeStatusType);
```

Copyright © 2003 IEEE. All rights reserved.

Authorized licensed use limited to: IEEE - Staff. Downloaded on October 28,2024 at 20:20:02 UTC from IEEE Xplore. Restrictions apply.

INTEL-1011
U.S. Patent 8,219,129

### D.4.4 Signal definition package (4)

.

package signal_definition 4(20)

```
SIGNAL
MLME_ASSOCIATE_request(integer,integer,integer,DevAddressType,
          Bitmap,Boolean),
MLME_ASSOCIATE_indication(DevAddressType,Bitmap,Boolean,Boolean),
MLME_ASSOCIATE_confirm(integer,statusMType),
MLME_ASSOCIATE_response(DevAddressType,integer,integer,Boolean),
MLME_BEACON_NOTIFY_indication(integer, PANDescriptorType,
       pendingaddressType, addresslistType, integer, boolean),
MLME_DISASSOCIATE_request(DevAddressType,integer,Boolean),
MLME_DISASSOCIATE_indication(DevAddressType, integer,Boolean,Boolean),
MLME_DISASSOCIATE_confirm(statusMType),
MLME_GET_request(PIBattributeType),
MLME_GET_confirm(statusType,PIBattributeType,PIBAttributeValue),
MLME_GTS_request(GTSCharacteristicsType,Boolean),
MLME_GTS_indication(DevAddressType,GTSCharacteristicsType,
        Boolean,Boolean),
MLME_GTS_confirm(GTSCharacteristicsType, statusMType),
MLME_ORPHAN_indication(DevAddressType,Boolean,Boolean),
MLME_ORPHAN_response(DevAddressType,integer,Boolean,Boolean),
MLME_POLL_request(integer,integer,Boolean),
MLME_POLL_confirm(statusMtype),
MLME_RESET_request(Boolean),
MLME_RESET_confirm(resetStatusType),
MLME_RX_ENABLE_request(integer,integer),
MLME_RX_ENABLE_confirm(statusRXType),
MLME_SCAN_request(ScanTypeType,Bitmap,ScanDurationType),
MLME_SCAN_confirm(statusMType,ScanTypeType, Bitmap, Integer,
        EnergyDetectListType,PANDescriptorSetType),
MLME_COMM_STATUS_indication(integer, integer, DevAddressType,
        integer, DevAddressType, statusMType),
MLME_SET_request(PIBattributeType, PIBAttributeValue),
MLME_SET_confirm(statusType, PIBattributeType),
MLME_START_request(BPIDType,ChannelType,integer,integer,
          boolean, boolean, boolean, boolean),
MLME_START_confirm(statusMType),
MLME_SYNC_request(boolean),
MLME_SYNC_LOSS_indication(LossReasonType);
```


Copyright © 2003 IEEE. All rights reserved.
Authorized licensed use limited to: IEEE - Staff. Downloaded on October 28,2024 at 20:20:02 UTC from IEEE Xplore. Restrictions apply.

INTEL-1011
U.S. Patent 8,219,129

### D.4.5 Signal definition package (5)

.

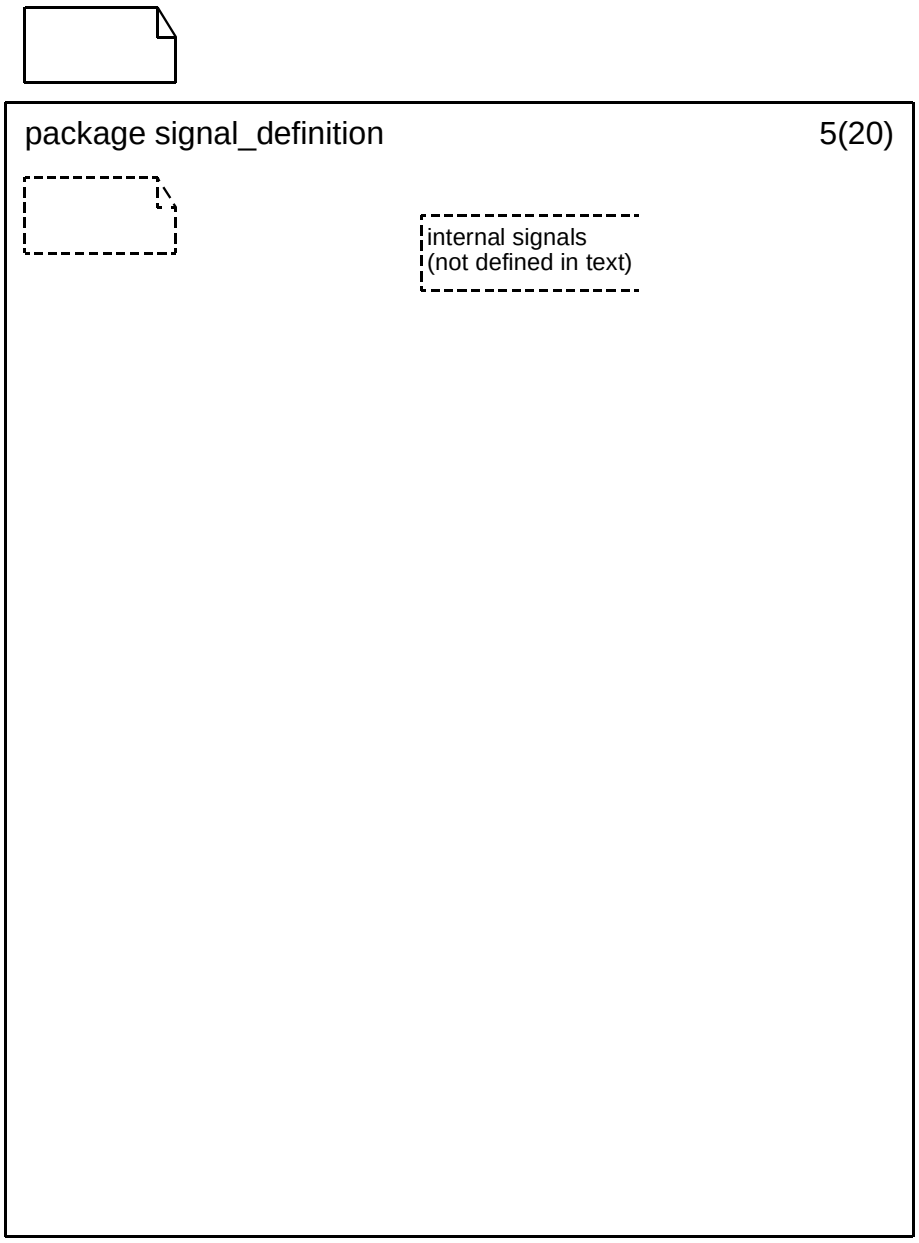


Copyright © 2003 IEEE. All rights reserved.

Authorized licensed use limited to: IEEE - Staff. Downloaded on October 28,2024 at 20:20:02 UTC from IEEE Xplore. Restrictions apply.

INTEL-1011
U.S. Patent 8,219,129

### D.4.6 Signal definition package (6)

.

package signal_definition 6(20)

```
syntype IEEEAddressType = integer
endsyntype IEEEAddressType;

syntype SetofBytes = integer
endsyntype SetofBytes;

syntype GTSCharacteristicsType=integer
endsyntype GTSCharacteristicsType;

syntype msduHandleType = integer
endsyntype msduHandleType;
```

```
newtype purgeStatusType
literals
    SUCCESS, INVALID_HANDLE
endnewtype purgeStatusType;

newtype resetStatusType
literals
    SUCCESS, DISABLE_TRX_FAILURE
endnewtype resetStatusType;

newtype statusRXType
literals
    SUCCESS, RX_DEFERRED, TX_ON
endnewtype statusRXType;
```


Copyright © 2003 IEEE. All rights reserved.
Authorized licensed use limited to: IEEE - Staff. Downloaded on October 28,2024 at 20:20:02 UTC from IEEE Xplore. Restrictions apply.

INTEL-1011
U.S. Patent 8,219,129

### D.4.7 Signal definition package (7)

.

package signal_definition 7(20)

```
newtype statusMType
Literals
  SuccessfulAssociation, PANatCapacity,PANAccessDenied,
  CoordinatorWishesDeviceToLeavePAN,DeviceWishesToLeavePAN,
  BEACON_LOSS,
  CHANNEL_ACCESS_FAILURE,
  DENIED,
  FAILED_SECURITY_CHECK,
  FRAME_TOO_LONG,
  INVALID_GTS,
  INVALID_HANDLE,
  INVALID_PARAMETER,
  NO_ACK,
  NO_BEACON,
  NO_DATA,
  NO_SHORT_ADDRESS,
  SUCCESS,
  TRANSACTION_EXPIRED,
  TRANSACTION_OVERFLOW,
  UNAVAILABLE_KEY,
  UNSUPPORTED_ATTRIBUTE
endnewtype statusMType;
```

Copyright © 2003 IEEE. All rights reserved.

Authorized licensed use limited to: IEEE - Staff. Downloaded on October 28,2024 at 20:20:02 UTC from IEEE Xplore. Restrictions apply.

INTEL-1011
U.S. Patent 8,219,129

### D.4.8 Signal definition package (8)

.

package signal_definition 8(20)

```
newtype PANDescriptorType
  struct
     CoordAddrMode integer;
     CoordPANId integer;
     CoordAddress DevAddressType;
     LogicalChannel integer;
     SuperframeSpec SuperframeType;
     linkquality integer;
     TimeStamp time;
     SecurityUse boolean;
     ACLEntry boolean;
     SecurityFailure boolean;
endnewtype PANDescriptorType;

newtype PANDescriptorSetType
    array(integer,PANDescriptorType)
endnewtype PANDescriptorSetType;

newtype LossReasonType
  literals PAN_ID_CONFLICT,
           REALIGNMENT,
           BEACON_LOST
endnewtype LossReasonType;
```


Copyright © 2003 IEEE. All rights reserved.
Authorized licensed use limited to: IEEE - Staff. Downloaded on October 28,2024 at 20:20:02 UTC from IEEE Xplore. Restrictions apply.

INTEL-1011
U.S. Patent 8,219,129

### D.4.9 Signal definition package (9)

.

package signal_definition 9(20)

```
newtype DevAddressType choice
   bit16 integer;
   bit64 IEEEAddressType;
endnewtype DevAddressType;

newtype EnergyDetectListType
  array (integer,EnergyLevel)
endnewtype EnergyDetectListType;
```

```
newtype PendingTransactionType
struct
   time_entered Time;
   p_message messageType;
   p_dam integer;
   p_dpid integer;
   p_da DevAddressType;
   p_psdu MPDUType;
   p_length integer;
   p_msduHandle integer;
endnewtype PendingTransactionType;

newtype PendingTransactionListType
  array(integer, PendingTransactionType)
endnewtype PendingTransactionListType;
```

Copyright © 2003 IEEE. All rights reserved.

Authorized licensed use limited to: IEEE - Staff. Downloaded on October 28,2024 at 20:20:02 UTC from IEEE Xplore. Restrictions apply.

INTEL-1011
U.S. Patent 8,219,129

### D.4.10 Signal definition package (10)

.

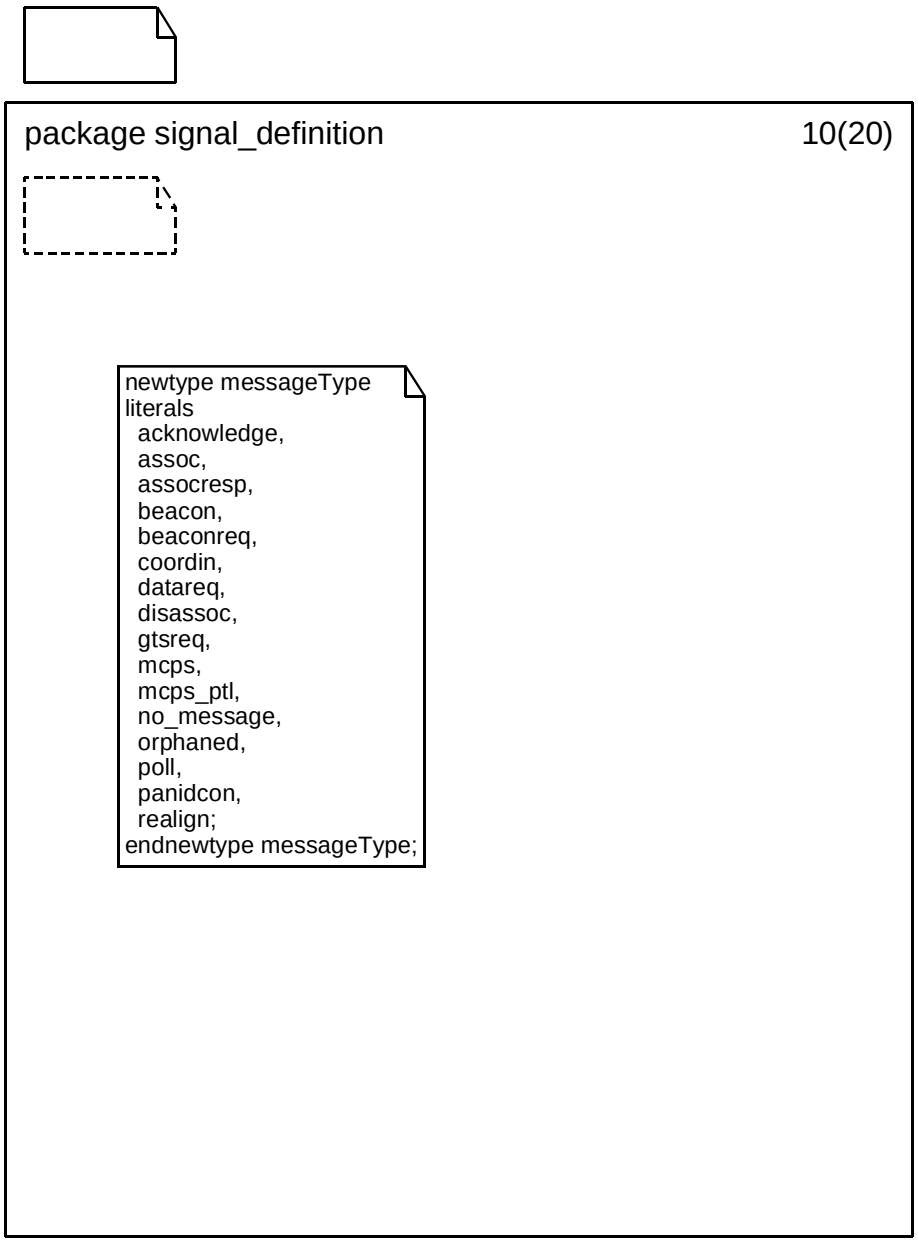



Copyright © 2003 IEEE. All rights reserved.
Authorized licensed use limited to: IEEE - Staff. Downloaded on October 28,2024 at 20:20:02 UTC from IEEE Xplore. Restrictions apply.

INTEL-1011
U.S. Patent 8,219,129

### D.4.11 Signal definition package (11)

.

package signal_definition 11(20)

```
syntype Bitmap = integer
endsyntype Bitmap;

syntype BPIDType=integer
endsyntype;

syntype ChannelType = integer
endsyntype;

syntype ScanDurationType = integer
endsyntype ScanDurationType;

syntype ScanTypeType=integer
endsyntype ScanTypeType;
```

Copyright © 2003 IEEE. All rights reserved.

Authorized licensed use limited to: IEEE - Staff. Downloaded on October 28,2024 at 20:20:02 UTC from IEEE Xplore. Restrictions apply.

INTEL-1011
U.S. Patent 8,219,129

### D.4.12 Signal definition package (12)

.

package signal_definition 12(20)

```
SIGNALLIST primfromPD =
PD_data_confirm, PD_data_indication;

SIGNALLIST primtoPD =
PD_data_request;

SIGNALLIST primfromPLME =
PLME_CCA_confirm,
PLME_ED_confirm,
PLME_GET_confirm,
PLME_SET_confirm,
PLME_SET_TRX_STATE_confirm;

SIGNALLIST primtoPLME =
PLME_CCA_request,
PLME_ED_request,
PLME_GET_request,
PLME_SET_TRX_STATE_request,
PLME_SET_request;
```

```
SIGNAL
PD_data_request(psduLength,psdu),
PD_data_confirm(phystatusType),
PD_data_indication(psduLength,psdu,ppduLinkQuality);

SIGNAL
PLME_CCA_request,
PLME_CCA_confirm(ChannelStatus),
PLME_ED_request,
PLME_ED_confirm(phystatusType,EnergyLevel),
PLME_GET_request(PIBattributeType),
PLME_GET_confirm(statusType,PIBattributeType,PIBAttributeValue),
PLME_SET_TRX_STATE_request(phystateType),
PLME_SET_TRX_STATE_confirm(phyStatusType),
PLME_SET_request(PIBattributeType, PIBAttributeValue),
PLME_SET_confirm(statusType, PIBattributeType);
```


Copyright © 2003 IEEE. All rights reserved.
Authorized licensed use limited to: IEEE - Staff. Downloaded on October 28,2024 at 20:20:02 UTC from IEEE Xplore. Restrictions apply.

INTEL-1011
U.S. Patent 8,219,129

### D.4.13 Signal definition package (13)

.

package signal_definition 13(20)

```
Newtype PIBattributeType
literals
  phyCurrentChannel,
  phyChannelsSupported,
  phyTransmitPower,
  phyCCAMode,
  macAckWaitDuration,
  macAssociationPermit,
  macAutoRequest,
  macBattLifeExt,
  macBeaconPayload,
  macBeaconPayloadLength,
  macBeaconOrder,
  macBeaconTxTime,
  macBSN,
  macCoordExtendedAddress,
  macCoordShortAddress,
  macDSN,
  macMaxCSMABackoffs,
  macMinBE,
  macPANId,
  macPromiscuousMode,
  macRxGTSId,
  macRxOnWhenIdle,
  macShortAddress,
  macSuperframeOrder,
  macTransactionPersistenceTime,
  macTxGTSId,
  macACLEntryDescriptorSet,
  macACLEntryDescriptorSetSize,
  macDefaultSecurity,
  macDefaultSecurityMaterialLength,
  macDefaultSecurityMaterial,
  macDefaultSecuritySuite,
  macSecurityMode
endnewtype PIBattributeType;
```

Copyright © 2003 IEEE. All rights reserved.

Authorized licensed use limited to: IEEE - Staff. Downloaded on October 28,2024 at 20:20:02 UTC from IEEE Xplore. Restrictions apply.

INTEL-1011
U.S. Patent 8,219,129

### D.4.14 Signal definition package (14)

.

package signal_definition 14(20)

```
Newtype phystateType
literals RX_ON, TRX_OFF, TX_ON
endnewtype phystateType;

Newtype phystatusType
literals SUCCESS, RX_ON, TRX_OFF, TX_ON
endnewtype phystatusType;
```

```
syntype psduLength = Integer
endsyntype;

syntype EnergyLevel = Integer
endsyntype;

syntype ppduLinkQuality = Integer
endsyntype;
```

```
syntype psdu = MPDUType
endsyntype;

newtype PIBAttributeValue choice
   r real;
   i integer;
   b boolean;
   d duration;
   t time;
   x ACLEntryDescriptorElementType;
endnewtype;
```


Copyright © 2003 IEEE. All rights reserved.
Authorized licensed use limited to: IEEE - Staff. Downloaded on October 28,2024 at 20:20:02 UTC from IEEE Xplore. Restrictions apply.

INTEL-1011
U.S. Patent 8,219,129

### D.4.15 Signal definition package (15)

s.

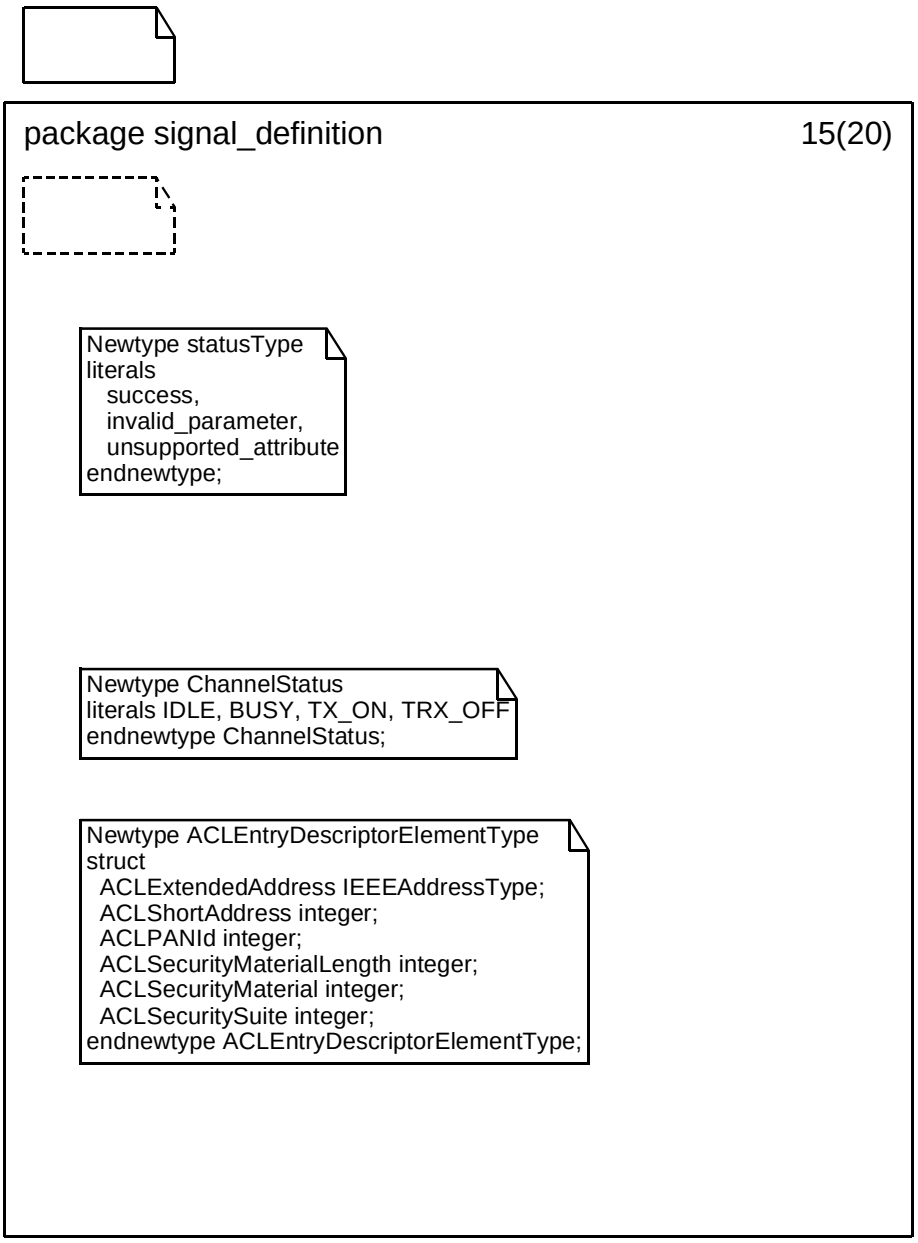


Copyright © 2003 IEEE. All rights reserved.

Authorized licensed use limited to: IEEE - Staff. Downloaded on October 28,2024 at 20:20:02 UTC from IEEE Xplore. Restrictions apply.

INTEL-1011
U.S. Patent 8,219,129

### D.4.16 Signal definition package (16)

.

package signal_definition 16(20)

```
SIGNAL
rf_slot(frameType);
```

```
newtype frameType choice
   empty integer;
   not_empty ppduType;
endnewtype frameType;
```

```
newtype ppduType
  struct
    PreambleSequence integer;
    SFD integer;
    FrameLength integer;
    MPDU MPDUType;
endnewtype ppduType;

newtype MPDUType
   struct
     MHR MHRType;
     MSDU MSDUType;
     MFR boolean;
endnewtype MPDUType;

newtype MSDUType choice
   b_data beaconMSDUType;
   d_data dataMSDUType;
   h_data acknowledgeMSDUType;
   c_data commandMSDUType;
endnewtype MSDUType;
```


Copyright © 2003 IEEE. All rights reserved.
Authorized licensed use limited to: IEEE - Staff. Downloaded on October 28,2024 at 20:20:02 UTC from IEEE Xplore. Restrictions apply.

INTEL-1011
U.S. Patent 8,219,129

### D.4.17 Signal definition package (17)

.

package signal_definition 17(20)

```
newtype MHRType
   struct
     Framecontrol FrameControlType;
     Sequencenumber integer;
     addressMHR addressMHRType;
endnewtype MHRType;

newtype addressMHRType choice
    one addr1Type;
    two addr2Type;
    NONE_present integer;
endnewtype addressMHRType;

newtype addr1Type
   struct
      pid integer;
      addr DevAddressType;
endnewtype addr1Type;

newtype addr2Type
   struct
      DA  addr1Type;
      SA  addr1Type;
endnewtype addr2Type;
```

```
newtype FrameControlType
  struct
     ftf integer;
     sef bitvalue;
     fpf bitvalue;
     arf bitvalue;
     ipf bitvalue;
     rsrvd integer;
     damf integer;
     rsrvd2 integer;
     samf integer;
endnewtype FrameControlType;
```

Copyright © 2003 IEEE. All rights reserved.

Authorized licensed use limited to: IEEE - Staff. Downloaded on October 28,2024 at 20:20:02 UTC from IEEE Xplore. Restrictions apply.

INTEL-1011
U.S. Patent 8,219,129

### D.4.18 Signal definition package (18)

.

package signal_definition 18(20)

```
newtype beaconmsduType
  struct
    superframe superframeType;
    pendingaddress pendingaddressType;
    addresslist addresslistType;
    b_payload beaconPayloadType;
endnewtype beaconmsduType;

newtype superframeType
  struct
    bof integer;
    sfof integer;
    fcsf integer;
    blef bitvalue;
    rsrvd1 integer;
    pcf bitvalue;
    apf bitvalue;
endnewtype superframeType;

newtype pendingaddressType
   struct
      nosapf integer;
      reserved1 bitvalue;
      noeapf integer;
      reserved2 bitvalue;
endnewtype pendingaddressType;

newtype AddressListType
   array (integer, DevAddressType)
endnewtype;

syntype beaconPayloadType=boolean
endsyntype beaconPayloadType;
```


Copyright © 2003 IEEE. All rights reserved.
Authorized licensed use limited to: IEEE - Staff. Downloaded on October 28,2024 at 20:20:02 UTC from IEEE Xplore. Restrictions apply.

INTEL-1011
U.S. Patent 8,219,129

### D.4.19 Signal definition package (19)

.

package signal_definition 19(20)

```
newtype commandmsduType
   struct
      cmd_type integer;
      cmd_payload payloadType;
endnewtype commandmsduType;

newtype payloadType choice
   nil     integer;
   one   integer;
   two   twoType;
   three threeType;
   four   fourType;
endnewtype payloadType;

newtype twoType
struct
    first integer;
    second integer;
endnewtype twoType;

newtype threeType
struct
   first integer;
   second integer;
   third integer;
endnewtype threeType;

newtype fourType
struct
   first integer;
   second integer;
   third integer;
   fourth integer;
endnewtype fourType;
```

Copyright © 2003 IEEE. All rights reserved.

Authorized licensed use limited to: IEEE - Staff. Downloaded on October 28,2024 at 20:20:02 UTC from IEEE Xplore. Restrictions apply.

INTEL-1011
U.S. Patent 8,219,129

### D.4.20 Signal definition package (20)

.

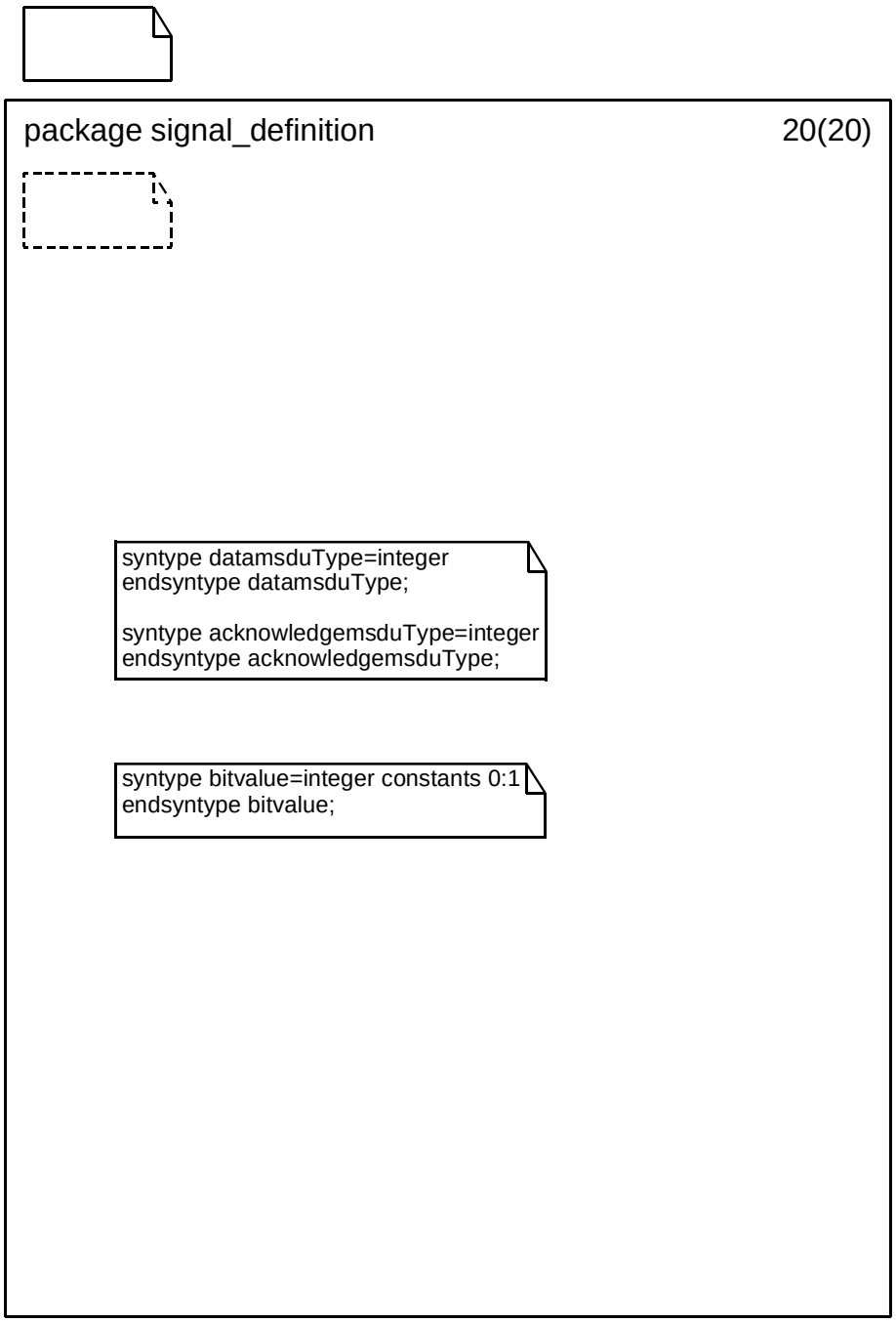



Copyright © 2003 IEEE. All rights reserved.
Authorized licensed use limited to: IEEE - Staff. Downloaded on October 28,2024 at 20:20:02 UTC from IEEE Xplore. Restrictions apply.

INTEL-1011
U.S. Patent 8,219,129

# Annex E

(informative)

# Coexistence with other IEEE standards and proposed standards

While not required by the specification, IEEE 802.15.4 devices can be reasonably expected to "coexist," that is, to operate in proximity to other wireless devices. This annex considers issues regarding coexistence between IEEE 802.15.4 devices and other wireless IEEE-compliant devices.

## E.1 Standards and proposed standards characterized for coexistence

This clause enumerates IEEE-compliant devices that are characterized and the devices that are not characterized for operation in proximity to IEEE 802.15.4 devices.

As described in 6.1.2, the IEEE 802.15.4 PHYs are specified for operation in 27 channels. Channel 0 through channel 10 reside in frequencies in the 868 MHz and 915 MHz bands and, therefore, do not significantly interact with other wireless devices covered under the IEEE 802 wireless standards. Channel 11 through channel 26 span frequencies from 2405 MHz to 2480 MHz and, therefore, may interact with other IEEE-compliant devices operating in those frequencies.

Standards and proposed standards characterized in this annex for coexistence are

— IEEE Std 802.11b-1999 (2400 MHz DSSS)
— IEEE Std 802.15.1-2002 [2400 MHz frequency hopping spread spectrum (FHSS)]
— IEEE P802.15.3 (2400 MHz DSSS)

Standards not characterized in this annex for coexistence are:

— IEEE Std 802.11, 1999 Edition, frequency hopping (FH) (2400 MHz FHSS)
— IEEE Std 802.11, 1999 Edition, infrared (IR) (333GHz AM)
— IEEE Std 802.16-2001 (2400 MHz OFDM)
— IEEE Std 802.11a-1999 (5.2GHz DSSS)

## E.2 General coexistence issues

IEEE Std 802.15.4-2003 provides several mechanisms that enhance coexistence with other wireless devices operating in the 2400 MHz band. This subclause provides an overview of the mechanisms that are defined in the standard. These mechanisms include

— CCA
— Dynamic channel selection
— Modulation
— ED and LQI
— Low duty cycle
— Low transmit power
— Channel alignment
— Neighbor piconet capability

These mechanisms are described briefly in E.2.1 through E.2.7.

Copyright © 2003 IEEE. All rights reserved.

Authorized licensed use limited to: IEEE - Staff. Downloaded on October 28,2024 at 20:20:02 UTC from IEEE Xplore. Restrictions apply.

INTEL-1011
U.S. Patent 8,219,129

### E.2.1 CCA

IEEE 802.15.4 PHYs provide the capability to perform CCA in its CSMA-CA mechanism (see 6.7.9). The PHYs require at least one of the following three CCA methods: ED over a certain threshold, detection of a signal with IEEE 802.15.4 characteristics, or a combination of these methods. Use of the ED option improves coexistence by allowing transmission backoff if the channel is occupied by any device, regardless of the communication protocol it may use.

### E.2.2 Modulation

The 2400 MHz PHY specified for IEEE Std 802.15.4-2003 uses a quasi-orthogonal modulation scheme, where each symbol is represented by one of 16 nearly orthogonal PN sequences. This is a power-efficient modulation method that achieves low signal-to-noise ratio (SNR) and signal-to-interference ratio (SIR) requirements at the expense of a signal bandwidth that is significantly larger than the symbol rate. A typical low-cost detector implementation is expected to meet the 1% PER requirement as SNR values of 5-6 dB.

Relatively wideband interference, such as IEEE 802.11b and IEEE P802.15.3, would appear like white noise to an IEEE 802.15.4 receiver. The detector performance in this case is similar to noise performance, but the overall SIR requirement is 9 dB to 10 dB lower because only a fraction of the IEEE 802.11b or IEEE P802.15.3 signal power falls within the IEEE 802.15.4 receiver bandwidth.

The use of PN sequences to represent each symbol in IEEE 802.15.4 offers DSSS-like processing gains to interferers whose bandwidth is smaller than the bandwidth of IEEE 802.15.4. For example, this processing gain helps to reduce the impact of an IEEE 802.15.1 interferer, whose 20 dB bandwidth is roughly 50% smaller than the bandwidth of IEEE 802.15.4. Whereas the SNR requirement is 5 dB to 6 dB for 1% PER in noise, the equivalent SIR requirement for an IEEE 802.15.1 signal centered within the pass band of the IEEE 802.15.4 receiver is only 2 dB.

In terms of interference to others, IEEE 802.15.4 appears as wideband interference to IEEE 802.15.1, and only a fraction (~50%) of the IEEE 802.15.4 signal power falls within the IEEE 802.15.1 receiver bandwidth. Furthermore, due to the bandwidth ratios and to the frequency hopping used in IEEE 802.15.1, IEEE 802.15.4 transmissions will interfere with approximately 3 out of the 79 hops, or approximately 4%. To an IEEE 802.11b receiver, IEEE 802.15.4 looks like a narrowband interferer, and the processing gain resulting from the spread-spectrum techniques in IEEE 802.11b will help reduce the impact of the IEEE 802.15.4 interferer.

### E.2.3 ED and LQI

The IEEE 802.15.4 PHYs include two measurement functions that indicate the level of interference within an IEEE 802.15.4 channel. The receiver ED measurement (see 6.7.7) is an estimate of the received signal power within an IEEE 802.15.4 channel and is intended for use as part of a channel selection algorithm at the network layer. The LQI (see 6.7.8) measures the received energy level and/or SNR for each received packet. When energy level and SNR information are combined, they can indicate whether a corrupt packet resulted from low signal strength or from high signal strength plus interference.

### E.2.4 Low duty cycle

The specifications of IEEE Std 802.15.4-2003 are tailored for applications with low power and low data rates (a maximum of 250 kb/s and down to 20 kb/s). Typical applications for IEEE 802.15.4 devices are anticipated to run with low duty cycles (under 1%). This will make IEEE 802.15.4 devices less likely to cause interference to other standards.


Copyright © 2003 IEEE. All rights reserved.
Authorized licensed use limited to: IEEE - Staff. Downloaded on October 28,2024 at 20:20:02 UTC from IEEE Xplore. Restrictions apply.

INTEL-1011
U.S. Patent 8,219,129

### E.2.5 Low transmit power

Although operation in the 2400 MHz band under Section 15.247 of FCC CFR47 [B14] rules allow transmission powers up to 1 W, IEEE 802.15.4 devices will likely operate with much lower transmit power. A key metric of IEEE Std 802.15.4-2003 is cost, and achieving greater than 10 dBm transmit power in a low-cost system on chip, while feasible, will be economically disadvantageous. Furthermore, European regulations (ETSI EN 300 328) for out-of-band emissions make it difficult to transmit above 10 dBm without additional, expensive filtering. These factors limit the distribution of devices with greater than 10 dBm transmit power to a few specialized applications.

At the low end, the IEEE 802.15.4 PHY specifies that devices must be capable of at least –3 dBm transmit power. At this level, actual transmit power represents a small fraction of the overall power consumed by the transmitter, so there is little benefit in terms of energy savings to operate below this level. However, the standard does encourage operating with lower transmit power, when possible, to minimize interference (see 6.7.5).

Thus the majority of IEEE 802.15.4 devices are expected to operate with transmit powers between –3 and 10 dBm, with 0 dBm being typical. IEEE 802.11b devices also operate under Section 15.247 of FCC CFR47 [B14], where up to 1 W of transmit power is allowed; however, most devices in the market today operate at transmit powers between 12 dBm and 18 dBm. IEEE P802.15.3 devices operate under Section 15.249 of FCC CFR47 [B14], which limits transmit power to 8 dBm EIRP. The EIRP measurement for the IEEE P802.15.3 PHY includes the antenna gain; therefore, a 1 dB increase antenna gain requires a 1 dB decrease in transmit power. In contrast, devices operating under Section 15.247 of FCC CFR47 [B14] are allowed up to 6 dB of antenna gain without modifications to the transmit power.

Assuming moderate antenna gain (~0 dBi) for typical implementations, the discussion in this subclause implies that a nominal IEEE 802.15.4 transmitter would operate about 8 dB less than the IEEE P802.15.3 transmitter and about 12 dB to 18 dB less than a typical IEEE 802.11b implementation.

### E.2.6 Channel alignment

The alignment between IEEE 802.11b (nonoverlapping sets) and IEEE 802.15.4 channels are shown in Figure E.1. There are four IEEE 802.15.4 channels that fall in the guard bands between (or above) the three IEEE 802.11b channels ($n$ = 15, 20, 25, 26 for North America; $n$ = 15, 16, 21, 22 in Europe). While the energy in this guard space will not be zero, it will be lower than the energy within the channels; and operating an IEEE 802.15.4 network on one of these channels will minimize interference between systems.

When performing dynamic channel selection, either at network initialization or in response to an outage, an IEEE 802.15.4 device will scan a set of channels specified by the ChannelList parameter. For IEEE 802.15.4 networks that are installed in areas known to have high IEEE 802.11b activity, the ChannelList parameter can be defined as the above sets in order to enhance the coexistence of the networks.

### E.2.7 Neighbor piconet capability

Interoperability with other systems is beyond the scope of IEEE Std 802.15.4-2003. However, certain schemes may be envisaged for this purpose, for example, the PAN coordinator can set aside GTSs specifically for use by other systems. This type of neighbor piconet support capability may further alleviate interference with other systems.

Copyright © 2003 IEEE. All rights reserved.

Authorized licensed use limited to: IEEE - Staff. Downloaded on October 28,2024 at 20:20:02 UTC from IEEE Xplore. Restrictions apply.

INTEL-1011
U.S. Patent 8,219,129

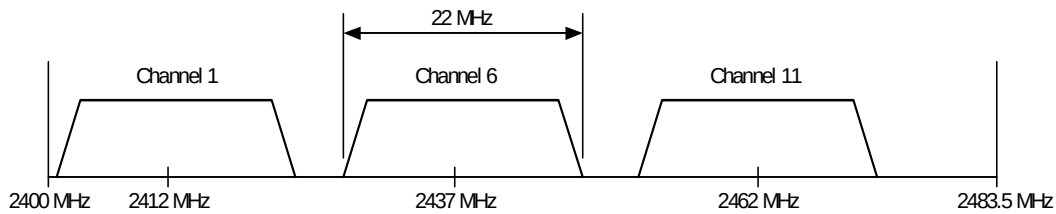


a) IEEE 802.11b North American channel selection (nonoverlapping)

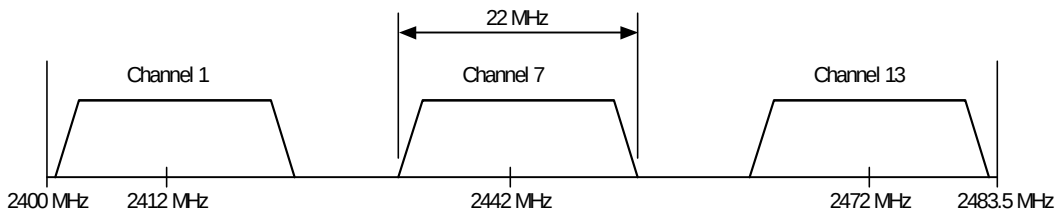


b) IEEE 802.11b European channel selection (nonoverlapping)

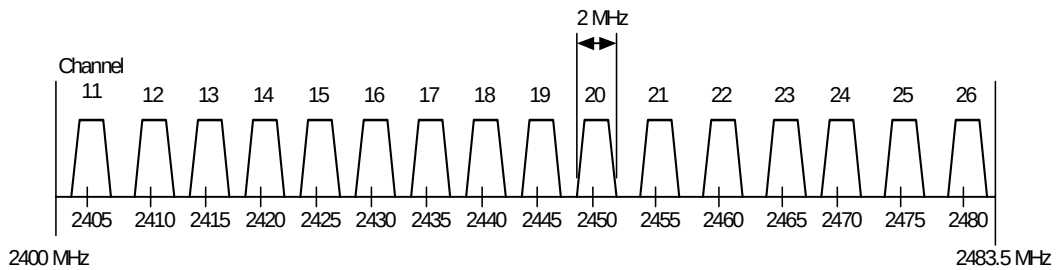


c) IEEE 802.15.4 channel selection (2400 MHz PHY)

**Figure E.1—IEEE 802.15.4 (2400 MHz PHY) and IEEE 802.11b channel selection**

## E.3 Coexistence performance

The assumptions made across all standards characterized for coexistence are described in E.3.1. Subclauses E.3.2 and E.3.3 describe the assumptions made for individual standards and quantify their predicted performance when coexisting with IEEE 802.15.4 devices.

### E.3.1 Assumptions for coexistence quantification

The assumptions in E.3.1.1 through E.3.1.9 are made to determine the level of coexistence.

#### E.3.1.1 Channel model

The channel model is based on the IEEE 802.11 specification used by IEEE P802.15.2 and IEEE P802.15.3.


Copyright © 2003 IEEE. All rights reserved.
Authorized licensed use limited to: IEEE - Staff. Downloaded on October 28,2024 at 20:20:02 UTC from IEEE Xplore. Restrictions apply.

INTEL-1011
U.S. Patent 8,219,129

$$d = 10^{\frac{(P_t - P_r - 40.2)}{20}} \quad \text{for } d < 8\text{m}$$

$$d = 8 \times 10^{\frac{(P_t - P_r - 58.5)}{33}} \quad \text{for } d > 8 \text{ m}$$

### E.3.1.2 Receiver sensitivity

The receiver sensitivity assumed is the reference sensitivity specified in each standards as follows:

a) –76 dBm for IEEE 802.11b 11 Mb/s CCK
b) –70 dBm for IEEE 802.15.1
c) –75 dBm for IEEE P802.15.3 22 Mb/s DQPSK
d) –85 dBm for IEEE 802.15.4

### E.3.1.3 Transmit power

The transmitter power for each coexisting standard has been specified as follows:

a) 14 dBm for IEEE 802.11b
b) 0 dBm for IEEE 802.15.1
c) 8 dBm for IEEE P802.15.3
d) 0 dBm for IEEE 802.15.4

### E.3.1.4 Receiver bandwidth

The receiver bandwidth is as required by each standard as follows:

a) 22 MHz for IEEE 802.11b
b) 1 MHz for IEEE 802.15.1
c) 15 MHz for IEEE P802.15.3
d) 2 MHz for IEEE 802.15.4

### E.3.1.5 Transmit spectral masks

The maximum transmitter spectral masks are assumed for the calculations. This assumption is the absolute worst-case scenario; in most cases, the transmitter spectrum will be lower.

**Table E.1—Transmit mask for IEEE 802.11b (see 18.4.7.3 in IEEE 802.11b)**

| Frequency | Relative limit |
|---|---|
| $f_c$ – 22 MHz < f < $f_c$ – 11 MHz and<br>$f_c$ + 11 MHz < f < $f_c$ + 22 MHz | –30 dBr |
| f < $f_c$ – 22 MHz and<br>f > $f_c$ + 22 MHz | –50 dBr |

Copyright © 2003 IEEE. All rights reserved.

Authorized licensed use limited to: IEEE - Staff. Downloaded on October 28,2024 at 20:20:02 UTC from IEEE Xplore. Restrictions apply.

INTEL-1011
U.S. Patent 8,219,129

**Table E.2—Transmit mask for IEEE 802.15.1 (see 7.2.3.1 in IEEE 802.15.1)**

| Frequency offset | Transmit power |
|---|---|
| ± 500 kHz | –20 dBc |
| \|M – N\| = 2 | –20 dBm |
| \|M – N\| ≥ 3 | –40 dBm |
| The transmitter is transmitting on channel M, and the adjacent channel power is measured on channel number N. | |

**Table E.3—Transmit mask for IEEE P802.15.3 (see 11.5.3 in IEEE P802.15.3)**

| Frequency offset | Relative limit |
|---|---|
| 7.5 MHz < \| f – $f_c$ \| < 15 MHz | –30 dBr |
| 15 MHz < \| f – $f_c$ \| < 22 MHz | –1 /7[ \| f – $f_c$ (MHz)\| + 13] dBr |
| 22 MHz < \| f – $f_c$ \| | –50 dBr |

**Table E.4—Transmit mask for IEEE 802.15.4 (see 6.5.3.1 in IEEE 802.15.4)**

| Frequency | Relative limit | Absolute limit |
|---|---|---|
| \| f – $f_c$ \| >3.5 MHz | –20 dBr | –30 dBm |

### E.3.1.6 IEEE 802.11b transmit PSD

Because IEEE 802.11 implementations will generally meet FCC requirements, they will achieve an absolute power of less than –41.3 dBm/MHz at a separation of 22 MHz from the carrier frequency. The reason for this is that there is a restricted band that ends at 2.39 GHz, which is 22 MHz from the center of the lowest channel used for the FCC regulatory domain (see 18.4.6.2 in [G3]). Thus, the relative power for greater than 22 MHz separation would be +14 dBm – (–41.3 dBm) = 55.3 dB.

### E.3.1.7 Interference characteristics

The effect of the interfering signal on the desired signal is assumed to be similar to additive white Gaussian noise (AWGN) in the same bandwidth.

### E.3.1.8 Bit error rate (BER) calculations

The BER calculations are as described in 5.3 of IEEE P802.15.2:

1) BER for IEEE 802.11b at 1 Mb/s = $Q(11 \times SINR)^{\frac{1}{2}}$

2) BER for IEEE 802.11b at 2 Mb/s = $\left(5.5 \times \frac{SINR}{2}\right)^{\frac{1}{2}}$


Copyright © 2003 IEEE. All rights reserved.
Authorized licensed use limited to: IEEE - Staff. Downloaded on October 28,2024 at 20:20:02 UTC from IEEE Xplore. Restrictions apply.

INTEL-1011
U.S. Patent 8,219,129

3) BER for IEEE 802.11b at 5.5 Mb/s = $\frac{8}{15} \times \left( 14 \times Q(8 \times SINR)^{\frac{1}{2}} + Q(16 \times SINR)^{\frac{1}{2}} \right)$

4) BER for IEEE 802.11b at 11 Mb/s =

$$\frac{128}{255} \times \left( 24 \times Q(4 \times SINR)^{\frac{1}{2}} + 16 \times Q(16 \times SINR)^{\frac{1}{2}} + 174 \times Q(8 \times SINR)^{\frac{1}{2}} \ldots \right.$$

$$\left. 16 \times Q(10 \times SINR)^{\frac{1}{2}} + 24 \times Q(12 \times SINR)^{\frac{1}{2}} + Q(16 \times SINR)^{\frac{1}{2}} \right)$$

5) BER for IEEE 802.15.1 = $0.5 \times e^{\frac{-SINR}{2}}$

6) BER for IEEE P802.15.3 at 11 Mb/s= $Q\left( SINR^{\frac{1}{2}} \right)$

7) BER for IEEE 802.15.4 = $\frac{8}{15} \times \frac{1}{16} \times \sum_{k=2}^{16} -1^{k} \binom{16}{k} e^{\left(20 \times SINR \times \left(\frac{1}{k} - 1\right)\right)}$

### E.3.1.9 PER

To convert between BER and PER, the following average packet lengths are assumed:

a) Average frame for IEEE 802.11b = 1024 bytes
b) Average frame for IEEE 802.15.1 = 1024 bytes
c) Average frame length for IEEE P802.15.3 = 1024 bytes
d) Average frame length for IEEE 802.15.4 = 22 bytes

## E.3.2 BER model

This subclause presents the BER for standards characterized for coexistence. The BER results were obtained using the analytical model from IEEE P802.15.2. The calculation follows the approach outlined in 5.3.2 of that document and the conversion from SNR to BER uses the formulas in 5.3.6 of that document. Figure E.2 illustrates the relationship between BER and SNR for IEEE 802.11b, IEEE P802.15.3 base rate, IEEE 802.15.1, and IEEE 802.15.4.

Copyright © 2003 IEEE. All rights reserved.

Authorized licensed use limited to: IEEE - Staff. Downloaded on October 28,2024 at 20:20:02 UTC from IEEE Xplore. Restrictions apply.

INTEL-1011
U.S. Patent 8,219,129

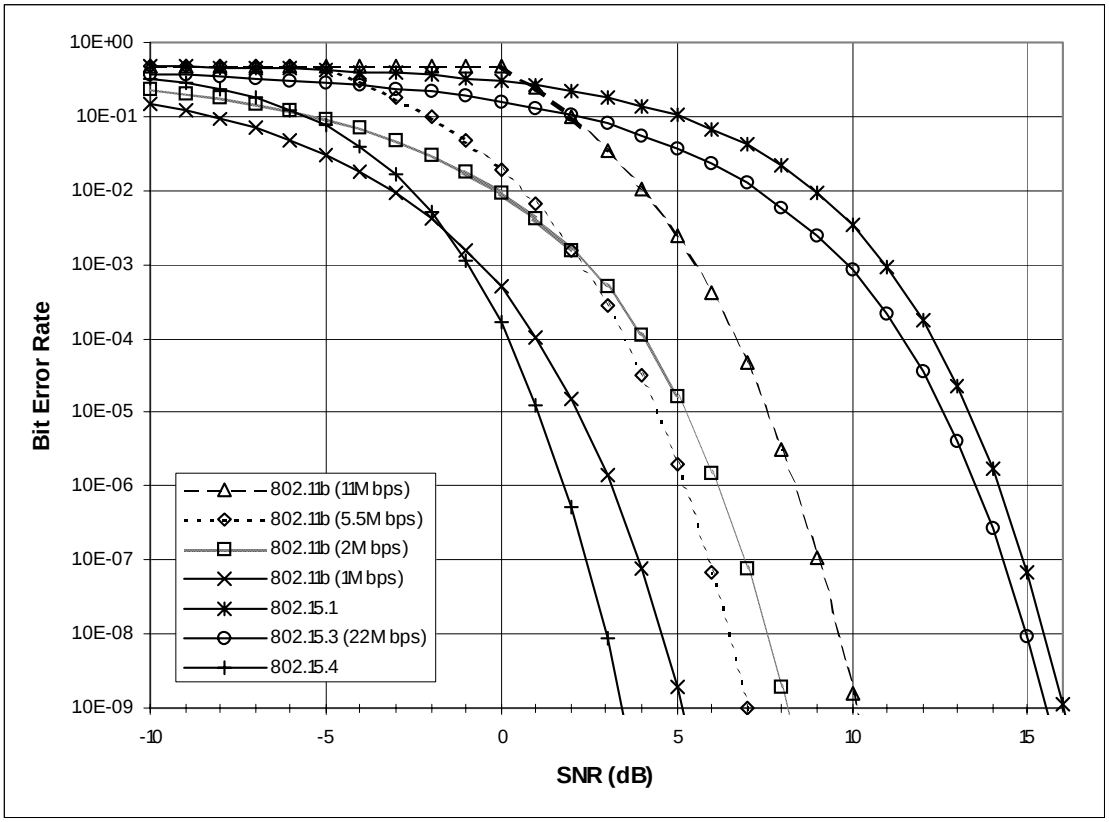


**Figure E.2—BER Results for IEEE 802.11, IEEE 802.15.1, IEEE P802.15.3 and IEEE 802.15.4**

### E.3.3 Coexistence simulation results

Using the assumptions outlined in E.3.2, an analytical simulation tool was developed to quantify the effect of interference between neighboring devices. For each of the cases studied, the receiver under test was presented with a desired signal at 10 dB above the required sensitivity (see E.3.1.2) and a single interfering device with appropriate transmit power (see E.3.1.3). The amount of received interference power was determined using the propagation model (see E.3.1.1) as well as the transmit PSD (see E.3.1.5) and receiver bandwidth (E.3.1.4), and the resulting SIR level was used to estimate the achievable PER.

The simulation output (see Figure E.3 through Figure E.8) shows the PER versus separation distance and frequency offset for various combinations of devices. When comparing the results, some obvious features stand out. First, for the nonhopping systems, large frequency offsets allow close-proximity coexistence (less than 2 m separation), while low-frequency offsets, or co-channel interference, require separation distances in the tens of meters. Therefore, as expected, the ability to detect channel occupancy and perform dynamic channel selection is an important mechanism for coexistence.

A second observation is that transmit power level is the dominant factor in co-channel interference situations. When a low-power IEEE 802.15.4 device is moved toward an IEEE 802.11b or IEEE P802.15.3 device, the IEEE 802.15.4 device is the first to degrade. IEEE 802.15.1 and IEEE 802.15.4 have similar transmit powers, and their interference effects on each other are similar.

Even with its low transmit power level, the results presented here suggest that an IEEE 802.15.4 device can cause degradation to the other devices in co-channel situations with separation distances below 20 m. However, in practice, several IEEE 802.15.4 coexistence features (which were not included in this PHY


Copyright © 2003 IEEE. All rights reserved.
Authorized licensed use limited to: IEEE - Staff. Downloaded on October 28,2024 at 20:20:02 UTC from IEEE Xplore. Restrictions apply.

INTEL-1011
U.S. Patent 8,219,129

simulation) will help to further reduce the occurrence and severity of co-channel interference. These include the very low duty cycle operation for typical IEEE 802.15.4 applications, as well as the use of CCA prior to transmission (CSMA-CA).

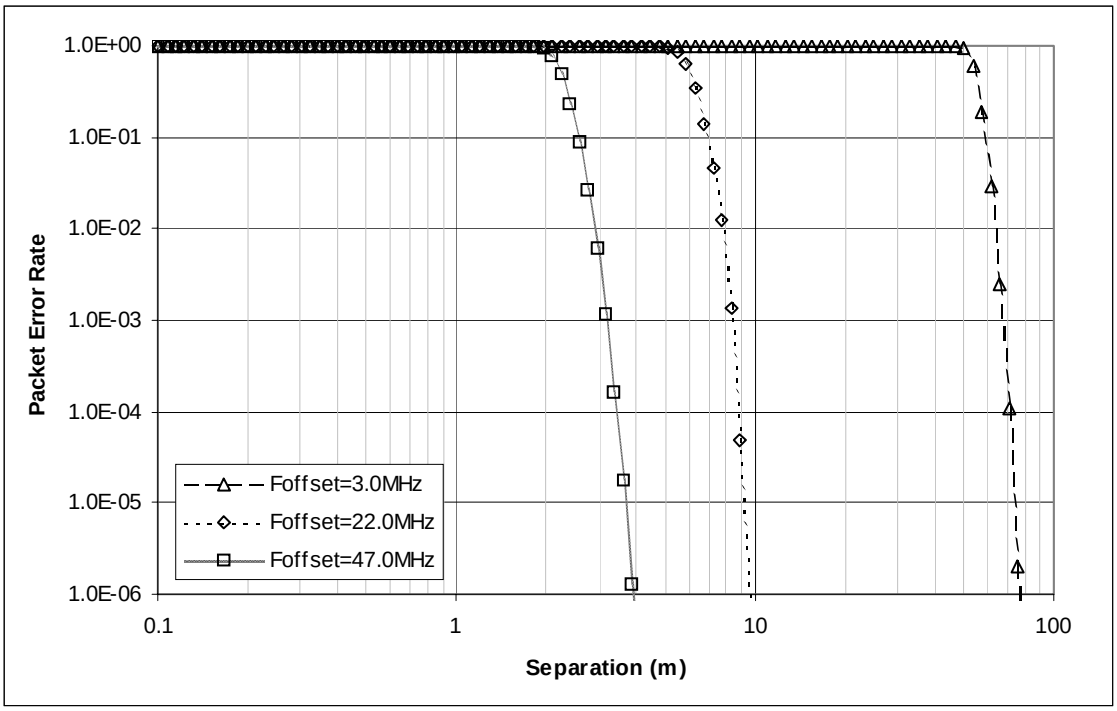


**Figure E.3—IEEE 802.15.4 receiver, IEEE 802.11b interferer**

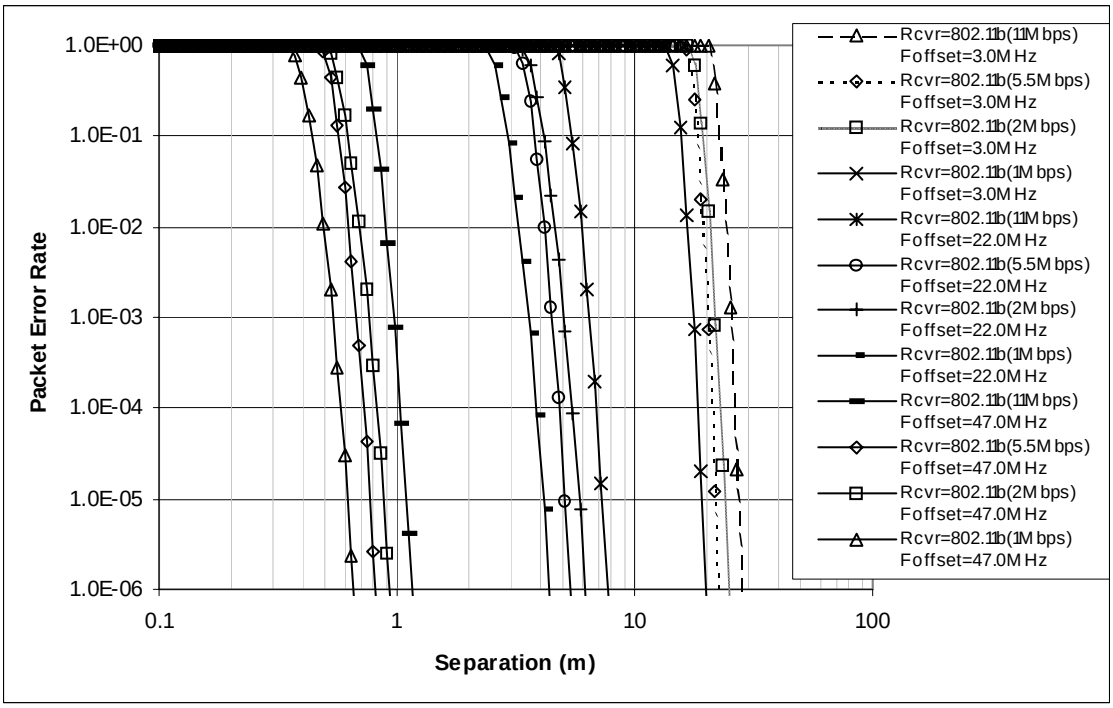


**Figure E.4—IEEE 802.11b receiver, IEEE 802.15.4 interferer**

Copyright © 2003 IEEE. All rights reserved.

Authorized licensed use limited to: IEEE - Staff. Downloaded on October 28,2024 at 20:20:02 UTC from IEEE Xplore. Restrictions apply.

INTEL-1011
U.S. Patent 8,219,129

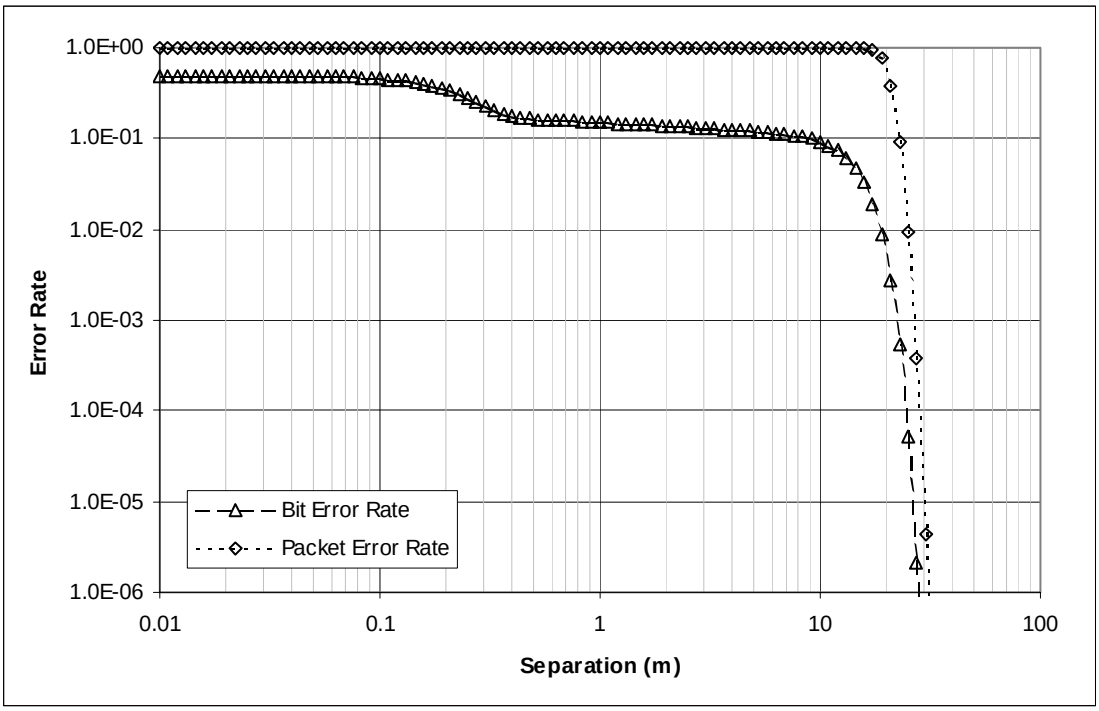


**Figure E.5—IEEE 802.15.4 receiver, IEEE 802.15.1 interferer**

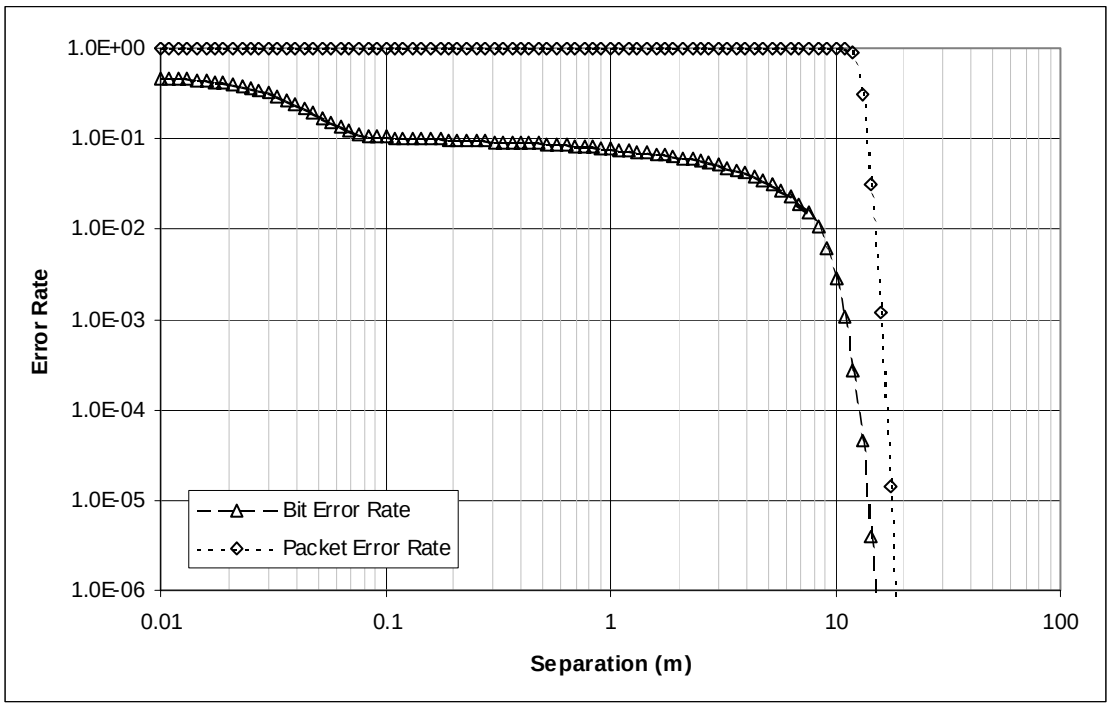


**Figure E.6—IEEE 802.15.1 receiver, IEEE 802.15.4 interferer**


Copyright © 2003 IEEE. All rights reserved.
Authorized licensed use limited to: IEEE - Staff. Downloaded on October 28,2024 at 20:20:02 UTC from IEEE Xplore. Restrictions apply.

INTEL-1011
U.S. Patent 8,219,129

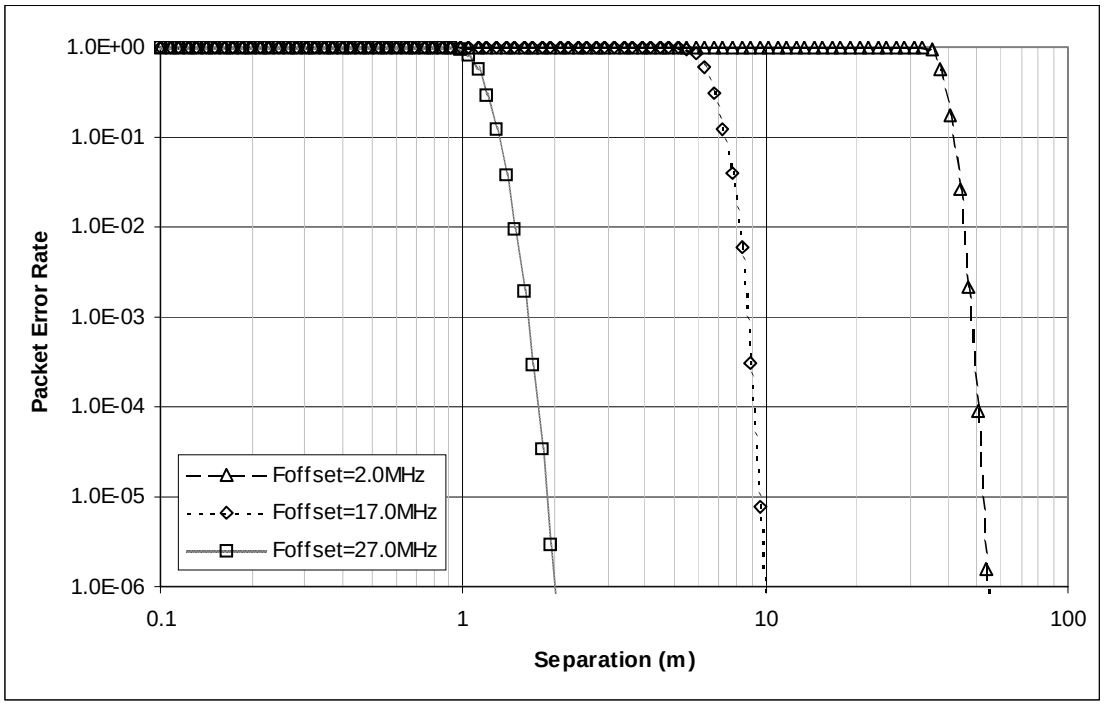


**Figure E.7—IEEE 802.15.4 receiver, IEEE P802.15.3 interferer**

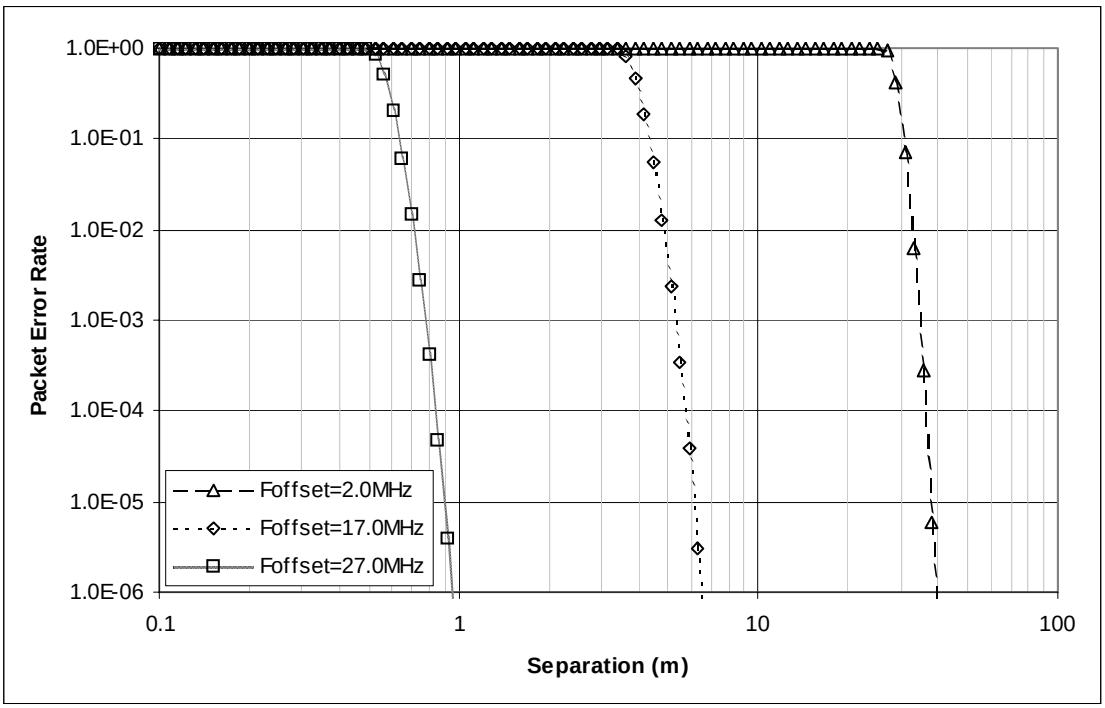


**Figure E.8—IEEE P802.15.3 receiver, IEEE 802.15.4 interferer**

Copyright © 2003 IEEE. All rights reserved.

Authorized licensed use limited to: IEEE - Staff. Downloaded on October 28,2024 at 20:20:02 UTC from IEEE Xplore. Restrictions apply.

INTEL-1011
U.S. Patent 8,219,129

## E.4 Notes on the calculations

The calculations for this annex were based on the formulas and descriptions from IEEE P802.15.2.


Copyright © 2003 IEEE. All rights reserved.
Authorized licensed use limited to: IEEE - Staff. Downloaded on October 28,2024 at 20:20:02 UTC from IEEE Xplore. Restrictions apply.

INTEL-1011
U.S. Patent 8,219,129

# Annex F

(informative)

# IEEE 802.15.4 regulatory requirements

## F.1 Introduction

This annex provides informational references to and key summary of the more critical regulatory requirements, with analysis of the impact on the specifications and design of IEEE 802.15.4 products where appropriate. Due to the great breadth and variety of worldwide regulations it is not possible to cover all nations in the available time and space. Fortunately, the 2400 MHz band is standardized for unlicensed operation nearly worldwide, and it is believed that the material contained in this annex captures the key requirements to fielding a product that can meet the rules in most major markets. However, the published rules are not always clear. Despite some degree of standardization, there are many differences between nations; and in some cases the various rules may appear to contradict each other without it being clear which rule has the force of law. Common practice and historical interpretation also often impact the situation, and the rules and their interpretations are also in a continuous state of flux. A good faith effort has been made here to provide accurate summary and interpretation of the rules and to predict impact upon system design, but no warranty is made other than a sincere effort to be helpful and to save time for users of the standard. The final word on regulatory requirements is under the jurisdiction of the individual nations in which a product is fielded. Manufacturers must take the responsibility to check specifications against the latest regulations of nations into which they market, using the measured results of certified electromagnetic compatibility (EMC) laboratories.

It is very enabling to the business of short-range radio and WPANs that these applications are granted allocations for certified or unlicensed operation where the manufacturer ensures that the product meets technical requirements and the end user does not require a license. There are regulatory allowances for this type of operation in the United States; most nations of Europe, Japan, and Canada; and many other nations around the world. Because this type of operation is generally uncoordinated as to frequency usage in a geographic region, it is usually understood that systems operating in these bands must accept interference from other users without regulatory recourse. The emphasis on competent design practice within the rules encourages good immunity to interference. The European rules go further than U.S. (FCC) rules by actually mandating certain performance standards.

In the United States, the regulations are given under FCC CFR47 [B14]. FCC rules contained there provide allocations in the 260–470 MHz range (see Section 15.231 of FCC CFR47), and in the 902–928 MHz and 2400–2483.5 MHz industrial, scientific, and medical (ISM) bands. In the ISM bands, Section 15.249 of FCC CFR47 provides for narrowband operation of up to approximately 1 mW effective radiated power (ERP) (if wideband, then 1 mW per 100 kHz below 1000 MHz, and 1 mW/MHz above 1000 MHz), and Section 15.247 of FCC CFR47 provides for wideband operation at up to 1 W transmitted power. In these FCC bands, the 260–470 MHz range is generally restricted on power, transmit duty cycle, and application so that it is primarily used for control and security applications, such as keyless entry. The ISM bands allow continuous transmission at higher power levels and are thus used for higher end applications. Section 15.247 of FCC CFR47 is the service category under which IEEE 802.15.4 equipment would most often be certified. Changes to this FCC rule that became effective May 30, 2002, eliminated the requirement in the United States for spread spectrum if the combination of data rate, coding, and modulation method has a 6 dB bandwidth greater than 500 kHz and a maximum transmitted spectral density of less than +8 dBm/3 kHz. However, either DSSS or FHSS may still be used to meet the requirements under Section 15.247 of FCC CFR47.

Copyright © 2003 IEEE. All rights reserved.

Authorized licensed use limited to: IEEE - Staff. Downloaded on October 28,2024 at 20:20:02 UTC from IEEE Xplore. Restrictions apply.

INTEL-1011
U.S. Patent 8,219,129

Canada provides for the same ISM bands and general operating modes as the United States. Canadian requirements are so similar to FCC requirements that in general for 902–928 MHz and 2400–2483.5 MHz band ISM operation the rules may be considered equivalent except for occasional time lag for the Canadian rules to be modified following changes to U.S. rules. The interpretations made later concerning allowed emissions in the United States as compared to Europe may be considered to also apply when comparing Canada to Europe. Section 6.2.2 (m) Canadian RSS-210 provides numerical requirements for narrowband operation in 902–928 MHz and 2400–2483.5 MHz and associated harmonic limits that are identical to operation according to Section 15.249 of FCC CFR47. As of the time of this writing, the Canadian requirements allowances for spread spectrum operation given in Section 6.2.2 (o) of Canadian RSS-210 are equivalent to the previous (prior to May 30, 2002) requirements of Section 15.247 of FCC CFR47. These requirements allow for carrier power up to 1 W for DSSS systems in both 902–928 MHz and 2400–2483.5 MHz if direct sequence processing gain is a minimum of 10 dB. However, because Canada has apparently adopted a strategy of being closely aligned with U.S. regulations, it is likely that Canada will in the near future adopt the changes recently made in the United States regarding digital modulation, which eliminated the processing gain requirement.

In Europe the band segment from 433.05 MHz to 434.79 MHz is the common control and security band and is primarily limited to these applications because of a general 10% duty cycle limit (see ERC 70-03 [B13]). Europe does not offer an ISM band from 902 MHz to 928 MHz, but does offer a limited band from 868 MHz to 870 MHz (see ERC 70.03 for general rules and Table F.7 in this annex for transmit duty cycle limits). The 868–870 MHz band may be expanded in the near future, as explained later in this annex under the more detailed European rules description. The 2400–2483.5 MHz ISM band is provided for also in ERC 70-03 for short-range devices (SRDs) (any digital modulation form), and also in ETSI EN 300 328 for spread spectrum devices with data rates equal to or greater than 250 kb/s, which includes IEEE 802.15.4. While this document does not provide the direct force of law within the European Community, it is generally followed by the regulations of each nation. However, individual nations may have variances that must be checked for fielding of equipment in a particular European country.

For operation in Japan in the 2400 MHz band, the governing document is generally ARIB STD-T66 [B14]. Although ARIB is an industry association, it has been chartered by the Japanese government to perform certain quasi-governmental functions in support of efficient use of the radio spectrum. Its standards are intended to capture both regulatory mandates and extensions over minimum government requirements that provide for efficient use of the radio spectrum.

Thus 2400–2483.5 MHz is the only worldwide allocation of spectrum for unlicensed usage without any limitations on applications and transmit duty cycle. It provides up to 1 W transmit power in spread spectrum modes in the United States, up to 100 mW in Europe, and up to 10 mW/MHz in Japan. Based on these regulatory opportunities, 2400–2483.5 MHz has been selected as the primary IEEE 802.15.4 band. Although IEEE 802.15.4 equipment is generally envisioned to operate with a maximum transmit power of approximately 0 dBm, the international community generally allows a minimum of +10 dBm in the 2400 MHz band. Although harmonic and spurious requirements vary, they may generally be met with –20 to –40 dBc of rejection relative to carrier power in the 0 to +10 dBm range. Spurious suppression requirements vary considerably not only by nation, but also by test methodology and the use of averaging. Where such information is clearly supplied by regulatory agencies, it is included and analyzed in this annex, but no claim to completeness or accuracy is made herein.

The European 868–870 MHz and the U.S. 902–928 MHz bands, being lower frequency and thus accessible in lower capability integrated circuit processes, are special cases of regional bands that are still highly useful even though they are not allocated worldwide. Given that antennas remain approximately omnidirectional, they also provide larger antenna aperture than 2400 MHz, so at a given transmit power, data rate, receiver sensitivity, and reliability level they will provide greater range. Because of their usefulness, a separate air interface specification is provided for these bands, and detailed discussion of regulatory impact is provided in this annex for these bands as well.


Copyright © 2003 IEEE. All rights reserved.
Authorized licensed use limited to: IEEE - Staff. Downloaded on October 28,2024 at 20:20:02 UTC from IEEE Xplore. Restrictions apply.

INTEL-1011
U.S. Patent 8,219,129

Table F.1 shows several websites that may be accessed for direct regulatory information. It is recommended that manufacturers review the latest regulations and utilize the latest test and certification methodologies before fielding new equipment.

**Table F.1—Regulatory-related web sites**

| Web Site | Comment |
|---|---|
| http://www.iec.ch | Main website for the IEC, keepers of the CISPR 16 measurement standard. |
| http://www.fcc.gov/oet/info/rules | Specific area of the main FCC website that points to a site where Section 15 rules may be downloaded. |
| http://strategis.ic.gc.ca/sc_mrksv/spectrum/engdoc/spect1.html | Website for Canadian regulatory authority ,Industry Canada. Major documents include GL-36 [B15] governing 2400 MHz operation, RSP-100 for certification procedures, and Canadian RSS-210 governing 902–928 MHz and 2450 MHz. |
| http://www.etsi.org | Europe, may download ETSI EN 300 220-1 [B10] (test methodology) and ETSI EN 300 683 (EMC compliance) |
| http://www.ero.dk | Europe, may download ERC 70-03E [B13], general description of allowed applications, bands, powers, etc., adopted by most European nations. |
| http://www.tele.soumu.go.jp/e/ | English language version of Japanese Radio Law. |
| http://www.telec.or.jp/ENG/Index_e.htm | English language version of Japanese regulatory certification requirements |
| http://www.arib.or.jp/english/html/overview/st_e.html | Listing of Japanese technical radio standards documents. ARIB STD-T66 [B14] is the document relative to IEEE 802.15.4. |

## F.2 Applicable U.S. (FCC) rules

The FCC rules officially govern operation only in the United States, but are followed in varying degrees by many other nations in the Americas and the Pacific rim. As mentioned earlier, the Canadian requirements are usually effectively identical except for time lag to align the Canadian rules following U.S. rule changes. There are five specific FCC rules of high interest to designers of IEEE 802.15 class systems. These sections are 15.35, 15.209, 15.205, 15.247, and 15.249 of FCC CFR47 [B14].

### F.2.1 Section 15.35 of FCC CFR47

The rule of Section 15.35 of FCC CFR47 gives the requirements for detector and averaging functions for certification measurements. These issues often have a significant effect on the other rules by which equipment is certified, so much so that understanding this rule and how it is interpreted is critical to developing the highest performance and most cost-effective product. FCC section 15.35 (b) specifies use of a “CISPR quasi-peak” detector function when measuring field strength levels at frequencies below 1000 MHz or, alternately, a peak detector function using the same bandwidth as the quasi-peak detector. Part 15 does not directly define this quasi-peak detector, but instead references CISPR 16 of the IEC. Section 4.2 of Canadian RSS-210 also specifies use of the “CISPR-16” detector. ETSI EN 300 220-1 [B10] governing European test requirements similarly refers to the use of the CISPR 16 detector. FCC 15.35 (b) states that unless otherwise stated (in a separate rule applicable to a special case), an averaging detector shall be used above 1000 MHz and shall employ a minimum resolution bandwidth of 1 MHz. Section 5.8 of Canadian RSS-210 similarly requires the 1 MHz detector bandwidth above 1000 MHz.

Copyright © 2003 IEEE. All rights reserved.

Authorized licensed use limited to: IEEE - Staff. Downloaded on October 28,2024 at 20:20:02 UTC from IEEE Xplore. Restrictions apply.

INTEL-1011
U.S. Patent 8,219,129

A first-order explanation of the functioning of the peak, quasi-peak, and averaging detectors may be of use to the reader. Although averaging and peak detectors require specification to exactly describe, their definitions are as most readers would generally expect. The peak detector has a fast attack and very slow fade and is sometimes also called an "envelope detector." The fast attack time of the peak detector function may allow for reducing the test time of a broadband test. The averaging detector captures the average power level over a long period of time. One way of generating an approximate average detector is to use a spectrum analyzer with the video bandwidth set much lower than the lowest expected modulation frequency, although the linearity of the spectrum analyzer may limit the accuracy of this measurement.

The quasi-peak detector function requires further explanation. This function was developed to correct for the subjective human response to pulse interference on audio channels. This allows for setting useful limits to sources that may cause interference to analog voice communications or television systems. Human hearing suffers less perceived interference from low pulse repetition frequencies (PRFs); therefore, this function deemphasizes the peak response of lower PRFs by use of a longer attack time constant and a shorter decay time constant than a pure peak detector. For digital communications systems, this function is less useful, but it is still commonly specified and used below 1000 MHz, in both Europe and the United States, because this lower frequency range was historically used for analog voice systems. A pre-detector overload factor (see Table F.2) captures the required linearity of the measurement system. Because the peak power in the measured channel can be much greater than the quasi-peak power, but still has to be correctly reacted to by the measurement system, the system must not compress on peaks that exceed the quasi-peak measurement by the overload factor values shown in Table F.2 in each subband.

**Table F.2—CISPR-16 quasi-peak detector specifications**

| | 9–150 kHz | 0.15–30 MHz | 30–1000 MHz |
|---|---|---|---|
| 6 dB bandwidth (kHz) | 0.2 | 9 | 120 |
| Charge time constant (ms) (attack time) | 45 | 1 | 1 |
| Discharge time constant (ms) (decay time) | 500 | 160 | 550 |
| Predetector overload factor (required excess linearity) (dB) | 24 | 30 | 43.5 |

Detector bandwidths result in emissions really being in spectral density form rather than in total power form, although for narrowband emissions they are effectively the same. The 902–928 MHz band, due to its 100 kHz detector bandwidth, rather easily benefits from direct sequence spreading that allows higher transmit power than Section 15.249 of FCC CFR47 (the "narrowband rule," see below in this Clause) directly indicates. For 2400 MHz operation under Section 15.249 of FCC CFR47, the 1 MHz detector bandwidth could also be used in the case of very wide bandwidth systems to allow more total power. This was useful for justifying higher carrier power for nonspread spectrum transmitters before the May 30, 2002, rule change that eliminated the direct sequence requirement for wideband systems. For example, IEEE 802.15.3 high-rate WPAN systems were initially planned to operate under the interpretation of about 1 mW/MHz instead of 1 mW total, allowing an approximately 10 dB increase in total transmit power over what a narrowband-only interpretation of Section 15.249 of FCC CFR47 would have allowed. The 1 MHz detector bandwidth above 1000 MHz is also useful for reducing the harmonic requirements of both 900 MHz and 2400 MHz systems, by taking advantage of the frequency spreading of the harmonics. This provides a relaxing of harmonic requirements for IEEE 802.15.4 systems for both the 2400 MHz and 900 MHz air interfaces, which will be detailed later in this Clause.


Copyright © 2003 IEEE. All rights reserved.
Authorized licensed use limited to: IEEE - Staff. Downloaded on October 28,2024 at 20:20:02 UTC from IEEE Xplore. Restrictions apply.

INTEL-1011
U.S. Patent 8,219,129

The rule in Section 15.35 of FCC CFR47 also allows increases in allowed transmit power (in some cases) or spurious emissions (in all cases) via time averaging. However, in the ISM bands peak carrier powers are specified, so the provisions of Section 15.35 of FCC CFR47 are limited to harmonics and other spurious emissions only. Specifically, Section 15.35 (c) of FCC CFR47 states that averaging of radiated emission limits may be used and that allowed peak emissions may be as much as 20 dB in excess of stated limits so long as the maximum averaging time does not exceed 100 ms. The worst-case 100 ms in a longer transmission must be used. Design formulas and examples relative to IEE 802.15.4 will be given later in this annex. It must be kept in mind that the FCC rules are referring to “emissions” in terms of radiated rms electric field strength, not directly in terms of power. This averaging rule is often helpful in reducing the difficulty in meeting the low general field strength levels given in Section 15.209 of FCC CFR47.

Section 6.5 of Canadian RSS-210 also allows for averaging with the same numerical specifications as Section 15.35 of FCC CFR47. Specifically, the averaging shall apply over the worst-case 100 ms period, and peak power shall not exceed 20 dB more than the allowed average power limit.

### F.2.2 Section 15.209 of FCC CFR47

The so-called “general” rule restricts the RF energy that electronic equipment may parasitically emit. The specific level of emissions is 200 uV/m at 3 m test range below 960 MHz and 500 uV/m above. These field strengths are approximately equivalent to –49.2 and –41.2 dBm ERP, respectively. The formula used to make this conversion from root-mean-square (rms) electric field $E_{\mathrm{rms}}$ to transmitted ERP $P_{\mathrm{terp}}$ at range $R$ m is

$$P_{terp} = 0.03333 R^2 E_{rms}^2 \tag{F.1}$$

Section 15.209 (d) of FCC CFR47 calls out the same detector functions over frequency as called out in Section 15.35 (b) of FCC CFR47, namely that CISPR quasi-peak detectors are used below 1000 MHz and averaging detectors above 1000 MHz. Thus these field strength levels are actually field strength spectral density rather than total field strength. The densities are per 100 kHz below 1000 MHz and per 1 MHz = above 1000 MHz.

This rule governs the general spurious nonharmonic emissions that IEEE 802.15.4 equipment can emit in the United States, and where harmonics fall into restricted bands, it also limits harmonics. The 2nd and 3rd harmonics of the 2400 MHz ISM band do fall into restricted bands as given in Section 15.205 of FCC CFR47, as do the 3rd and 5th harmonics of the 900 MHz ISM band. Again, the Canadian regulations outlined in Section 6.2.1 of Canadian RSS-210 are nearly identical.

### F.2.3 Section 15.205 of FCC CFR47

This clause documents the restricted bands (see Table F.3) where only spurious emissions are allowed and where those emissions must meet the general levels of Section 15.209 of FCC CFR47. Above 1000 MHz, averaging according to Section 15.35 of FCC CFR47 may be used.

Note that the 2nd and 3rd harmonics of equipment in the 2400 MHz ISM band fall into restricted bands, as do the 3rd and 5th harmonics of 902–928 MHz. The restricted band from 2483.5 MHz to 2500 MHz is also a cause for potential concern for close-in spurious emissions from IEEE 802.15.4 transmissions, with the highest center channel setting at 2480 MHz being only 3.5 MHz away.

The list of restricted bands used in Canada are almost identical to the ones shown in the Table F.3. See Table 2 of Canadian RSS-210 to note the differences.

Copyright © 2003 IEEE. All rights reserved.

Authorized licensed use limited to: IEEE - Staff. Downloaded on October 28,2024 at 20:20:02 UTC from IEEE Xplore. Restrictions apply.

INTEL-1011
U.S. Patent 8,219,129

**Table F.3—Partial list of restricted frequencies under Section 15.205 of FCC CFR47**

| Restricted frequency range |
|---|
| 240–285 MHz |
| 322–335.4 MHz |
| 399.9–410 MHz |
| 608–614 MHz |
| 960–1240 MHz |
| 1300–1427 MHz |
| 1435–1626.5 MHz |
| 1645.5–1646.5 MHz |
| 1660–1710 MHz |
| 1718.8–1722.2 MHz |
| 2200–2300 MHz |
| 2310–2390 MHz |
| 2483.5–2500 MHz |
| 2655–2900 MHz |
| 3260–3267 MHz |
| 4.5–5.15 GHz |
| 7.25–7.75 GHz |
| 10.6–12.7 GHz |

The limit of 500 uV/m at 3 m is approximately –41 dBm/MHz ERP; therefore, for approximately –1 dBm narrowband continuous transmission, at least 40 dB harmonic suppression is required. For the 2400 MHz direct sequence IEEE 802.15.4 system with approximately 1 MHz 3 dB power bandwidth, there is a moderate relaxation of this requirement due to spreading. At the 2nd harmonic, the power bandwidth is approximately 2 MHz; therefore, for a 1 MHz detector bandwidth, the requirement is relaxed 3 dB to yield a –38 dBc harmonic suppression requirement. For a 3 MHz power bandwidth at the 3rd harmonic of 2400 MHz, the relaxation is 4.8 dB (see F.5). For the 900 MHz U.S. (40 kb/s, 600 kchip/s) IEEE 802.15.4 air interface, the 3rd and 5th harmonics fall into these restricted bands. The fundamental 3 dB bandwidth of the 900 MHz PHY is about equal to the chip rate and, therefore, is about 600 kHz. At the 3rd harmonic this allows a relaxation of about 2.5 dB; and at the 5th harmonic, a relaxation of about 4.8 dB. Even with these relaxations, these harmonic requirements are fairly difficult for low-cost equipment; but the use of the averaging rules of Section 15.35 of FCC CFR47 applied to the actual transmit times of IEEE 802.15.4 packets will relax them considerably more. This is quantified in sections 5 and 6.

### F.2.4 Section 15.247 of FCC CFR47

Section 15.247 of FCC CFR47 is the primary category for U.S. operations of IEEE 802.15.4 equipment. This service category provides the potential for the highest performance of all the unlicensed service categories, allowing freedom from licensing, transmit powers up to 1 W, and no limitations for application


Copyright © 2003 IEEE. All rights reserved.
Authorized licensed use limited to: IEEE - Staff. Downloaded on October 28,2024 at 20:20:02 UTC from IEEE Xplore. Restrictions apply.

INTEL-1011
U.S. Patent 8,219,129

or transmit duty cycle. This rule is applicable to the ISM bands, which are 902 MHz to 928 MHz, 2400 MHz to 2483.5 MHz, and 5725 MHz to 5850 MHz. Of these bands, only the 2400–2483.5 MHz band provides a nearly worldwide available band of suitable power and freedom from applications restrictions for IEEE 802.15.4.

Until May 30, 2002, this service category required either FHSS or DSSS, or a combination. However, at that time the requirement for direct sequence was replaced by digital modulation, which was defined as modulation that satisfied the following two requirements:

a) 6 dB bandwidth of 500 kHz or more
b) Spectral density not to exceed +8 dBm/3 kHz

Note that the 2 Mchip/s O-QPSK waveform of the IEEE 802.15.4 2400 MHz air interface, with 6 dB bandwidth of about 1.5 MHz, and the 600 kc/s BPSK waveform of the 902–928 MHz air interface, with bandwidth of about 600 kHz, both meet the definition of digital modulation.

Allowed transmit power is up to 1 W delivered at the antenna port, with a maximum antenna gain up to 6 dBi. If antenna gain is greater than 6 dBi, then transmit power must be reduced by an amount equal to the decibel measure of how much the antenna gain exceeds 6 dBi. However, for 2400 MHz fixed point-to-point operations, the transmit power need only be reduced by 1 dB for every 3 dB that antenna gain exceeds 6 dBi.

The spurious and harmonic requirement of Section 15.247 of FCC CFR47 is a rather easily achieved –20 dBc, as measured in a detector bandwidth 100 kHz wide and compared to the 100 kHz of the modulated carrier that contains the highest power. However, it must be noted that the 2nd and 3rd harmonics of 2400 MHz and the 3rd and 5th harmonics of 900 MHz fall into restricted bands as given in Section 15.205 of FCC CFR47 and thus have stricter requirements. As discussed above, these requirements can then be mitigated by the 1 MHz detector bandwidth and averaging effects of Section 15.35 of FCC CRF47. The resulting requirements will be quantified in F.5 and F.6.

See Section 6.2.2 (o) of Canadian RSS-210 for the very similar Canadian rules allowing operation in both 902 MHz to 928 MHz and 2400 MHz to 2483.5 MHz. As of the time of this writing (November 2002), these rules did not yet allow for the nondirect sequence digital modulation, but it is likely that a Canadian rule change to bring section 6.2.2 into agreement with Section 15.247 of FCC CFR47 will shortly be made.

### F.2.5 Section 15.249 of FCC CFR47

The service category of Section 15.249 of FCC CFR47 provides for narrowband (nonspread spectrum) operation in the same ISM band of 902 MHz to 928 MHz, 2300 MHz to 2383.5 MHz, and 5725 MHz to 5850 MHz. Operation is allowed up to 50 mV rms of electric field strength from a transmitter at a 3 m test range. This is equivalent to 0.75 mW ERP [see Equation (F.1)]. Under Section 15.35 of FCC CRF47, these field strengths are actually interpreted as field strength spectral *densities* and are per 100 kHz for the 902–928 MHz band and per 1 MHz = for the two higher bands. The harmonic requirement is a difficult –40 dBc relative to the maximum allowed power, and the restricted bands can require additional suppression. Fortunately the provisions of Section 15.35 of FCC CRF47 can be applied to reduce these difficult requirements.

IEEE 802.15.4 equipment would not generally be certified under this category, but it could be if the product manufacturer chose to do so. For 902–928 MHz operation, it is not as disadvantageous as it might seem because the interpretation of this section as a transmitted density allows higher 900 MHz powers for IEEE 802.15.4 equipment than for narrowband equipment. Because the detector bandwidth used for certification testing in this band is 100 kHz wide, the 902–928 MHz air interface with about 600 kHz bandwidth could be certified under this service category at up to about +6.5 dBm. However, because the detector bandwidth at 2400 MHz is 1 MHz and the 3 dB bandwidth of the 2400 GHz air interface is also

Copyright © 2003 IEEE. All rights reserved.

Authorized licensed use limited to: IEEE - Staff. Downloaded on October 28,2024 at 20:20:02 UTC from IEEE Xplore. Restrictions apply.

INTEL-1011
U.S. Patent 8,219,129

about 1 MHz, the carrier power is still limited to the narrowband limit of about –1 dBm. Concerning harmonics, because the 2nd and 3rd harmonics of 2400 MHz and the 3rd and 5th harmonics of 900 MHz fall into restricted bands anyway, only the 2nd harmonic of 900 MHz really benefits from the relaxed –20 dBc harmonic requirement given in Section 15.247 of FCC CFR47. With that exception, the harmonic requirements of Section 15.247 and Section 15.249 of FCC CFR47 are practically the same because they happen to have restricted band limits for low-order harmonics.

See Section 6.2.2 (m) of Canadian RSS-210 for the 902–928 MHz and 2400–2483.5 MHz narrowband authorizations that are identical to Section 15.249 of FCC CFR47.

## F.3 Applicable European rules

The over 40 member nations of the European Conference of Postal and Telecommunications Administrations (CEPT) have established a fairly high degree of standardization throughout Europe on the operation of low power radio equipment. Most disagreements are in the nature of allowed modes and transmit duty cycles that may be accounted for in software control, allowing the same hardware and technical standards to be used throughout Europe. The ETSI develops technical standards for CEPT countries. Requirements are spread across multiple documents, as shown in Table F.4 and are influenced by other documents as well. It is not always clear when European Community advisory and recommendation documents have attained the force of law, so the regulatory requirements of a particular nation must be checked before planning to market equipment there.

**Table F.4—Primary European rules documents**

| Specification Number | Title | Comment |
|---|---|---|
| CEPT CISPR 16-1: 1999 | Specifications for radio disturbance and immunity measuring apparatus and methods: Part 1: Radio disturbance and immunity measuring apparatus. | Specifications on test methods and equipment, including EMC antennas and the CISPR-16 quasi-peak detector that are referenced, but not provided in other sources. Available from the IEC. |
| ERC 70-03 [B13] | Relating to the Use of Short Range Devices (SRDs), April 2002 | General recommendations that are loosely followed by most European nations. |
| ETSI EN 300 328-1 [B11] | Electromagnetic Compatibility and Radio Spectrum Matters (ERM); Wideband Transmission Systems; Part 1 | European rules for spread spectrum systems in ISM bands. Available from ETSI. |
| ETSI EN 300 328-2 [B12] | Electromagnetic Compatibility and Radio Spectrum Matters (ERM); Wideband Transmission Systems; Part 2 | European rules for spread spectrum systems in ISM bands. Available from ETSI. |
| ETSI EN 300 220-1 [B10] | Electromagnetic Compatibility and Radio Spectrum Matters (ERM); Short Range Devices (SRDs); Part 1 | Provides details on European test methodology to confirm compliance. |

The most fundamental document to use as a starting point in understanding general low-power radio operation in Europe is ERC 70-03E [B13] on SRD, downloadable from www.ero.dk. This document gives a general description of recommended applications, frequencies, powers, and other specifications. It provides advisory recommendations for narrowband operation in the 2400 MHz ISM band in the table of Annex 1 and allows up to 10 mW EIRP in narrowband or spread spectrum mode. ERC 70-03E is particularly


Copyright © 2003 IEEE. All rights reserved.
Authorized licensed use limited to: IEEE - Staff. Downloaded on October 28,2024 at 20:20:02 UTC from IEEE Xplore. Restrictions apply.

INTEL-1011
U.S. Patent 8,219,129

applicable to IEEE 802.15.4 equipment operating in the European 868.0–868.6 MHz band segment. However, for ISM band spread spectrum operation, such as IEEE 802.15.4 equipment operating at 2400 MHz with bit rates greater than or equal to 250 kb/s, ETSI EN 300 328 is in general the formal governing document (although it may be overruled by the regulatory documents of a specific nation). For devices with less than 10 mW EIRP, the rules of Section 5 of ETSI EN 300 328 may be used or the rules of Annex 1 of ERC 70-03E. For power levels between 10 mW and 100 mW in the 2400 MHz band, only ETSI EN 300 328 applies, and DSSS or FHSS must be used.

Details on test methodology to confirm compliance are given in CISPR 16-1: 1999 and in ETSI EN 300 220-1 [B10]. An important general note is the bandwidths in which carrier and spurious emissions are measured. The specification of bandwidth actually means that what is commonly referred to as power is really PSD, and total power over wider bandwidth than the detector may be higher than the level allowed within a detector bandwidth. Fortunately, the standards chosen are basically the standards also specified in the FCC rules. Table 5 in Section 6.6 of ETSI EN 300 220-1 specifies that below 1000 MHz a test spectrum analyzer bandwidth of 100 kHz shall normally be used, and above 1000 MHz a bandwidth of 1 MHz shall be used. This is in general identical to the provisions of FCC 15.35. However, a slight variance exists in that Table 5 also states that below 25 MHz a bandwidth of 10 kHz shall be used, and below 150 kHz a bandwidth of 1 kHz shall be used. The zone between 150 kHz and 25 MHz is one in which clock and digital noise does have a potential to cause difficulty; therefore, certification laboratories will normally conduct testing over that band. Note that the ETSI EN 300 220-1 frequency boundary for changing detector bandwidths is 25 MHz as opposed to the 30 MHz given in CISPR 16-1: 1999.

An important difference in the European rules as compared to the FCC rules are provisions that go beyond preventing interference to other systems, which is a primary goal of the FCC rules, into attempting to guarantee acceptable system performance. This is captured in law in that most electronic equipment sold in the European Union must comply with EMC Directive 89/336/EEC, and carry the CE mark that claims compliance. After April 8, 2000, compliance with these requirements could be self certified by certain procedures (see www.ero.dk). Another document governing required performance its ETSI EN 300 683. This document's performance requirements are centered on interference immunity from both outside electromagnetic fields and disturbances on power supply and control inputs. These documents reference other documents as well, the full set of which must be reviewed by manufacturers.

### F.3.1 European 2400 MHz band rules

Basic 2400 MHz band parameters extracted from ETSI EN 300 328 are given in Table F.5.

**Table F.5—Basic general 2400 MHz band parameters from ETS EN 300 328**

| Parameter | Specifications | Comments |
|---|---|---|
| Carrier Frequency | 2400 MHz to 2483.5 MHz | |
| Transmit Power | 100 mW ERP maximum | |
| Modulation | Frequency hopping: At least 20 channels with 0.4 s maximum dwell time<br>Direct sequence: ERP limited to 10 mW/MHz maximum | In addtion to spread spectrum, data rates greater than or equal to 250 kb/s are required. |
| Narrowband spurious emissions from 30 MHz to 1 GHz | –36 dBm ERP operating<br>–57 dBm ERP standby | |

Copyright © 2003 IEEE. All rights reserved.

Authorized licensed use limited to: IEEE - Staff. Downloaded on October 28,2024 at 20:20:02 UTC from IEEE Xplore. Restrictions apply.

INTEL-1011
U.S. Patent 8,219,129

**Table F.5—Basic general 2400 MHz band parameters from ETS EN 300 328 *(continued)***

| Parameter | Specifications | Comments |
|---|---|---|
| Narrowband spurious emissions from 1 GHz to 12.75 GHz | –30 dBm operating<br>–47 dBm standby | Approximately 10 dB more relaxed on 2nd and 3rd harmonic than U.S. requirement |
| Narrowband spurious emissions 1.8 GHz to 1.9 GHz and 5.15 GHz to 5.3 GHz | –47 dBm operating<br>–47 dBm standby | |
| Wideband spurious emissions from 30 MHz to 1 GHz | –87 dBm/Hz ERP operating<br>–107 dBm ERP standby | |
| Wideband spurious emissions from 1 GHz to 12.75 GHz | –80 dBm/Hz operating<br>–97 dBm/Hz standby | Note that the interpretation of the transmitted modulation sidebands and phase noise out of band must meet these levels. |
| Narrowband spurious emissions 1.8 GHz to 1.9 GHz and 5.15 GHz to 5.3 GHz | –97 dBm/Hz operating<br>–97 dBm/Hz standby | |

Note that the wideband spurious emission may be interpreted so that transmitted phase noise, as spread by the DSSS modulation, must meet –80 dBm/Hz general wideband level at the band edge.

The allowed emission by the receiver portion of the device, which is presumably interpreted as during the receive time of a transceiver, are given in Clause 5.3.2 of ETSI EN 300 328 and documented in Table F.6.

**Table F.6—Allowed receiver spurious emissions for 2400 MHz band from ETSI EN 300 328**

| Parameter | Specification | Comments |
|---|---|---|
| Narrowband RX emissions 30 MHz to 1 GHz | –57 dBm | |
| Narrowband RX emissions 1 GHz to 12.75 GHz | –47 dBm | |
| Wideband RX emissions 30 MHz to 1 GHz | –107 dBm/Hz | |
| Narrowband RX emissions 1 GHz to 12.75 GHz | –97 dBm/Hz | |

There are country-by-country exceptions to the 2400 MHz rules that change over time. The latest exceptions may be noted by referring to the current revision of ERC 70-03E [B13], Annex 1 Band L Non Specific Short-Range Devices 2400-2483.5 MHz. Other applications that could cause potential interference to IEEE 802.15.4 2400 MHz band operation are noted below.

Railway autoidentification systems in Europe are allocated at 2446 MHz to 2454 MHz and, because they are fairly powerful, could cause interference to IEEE 802.15.4 systems using these frequencies. There are five narrowband channels of 1.5 MHz each over this band, at transmit powers up to 500 mW in the presence of the train. See Annex 4 of ERC 70-03E for more details.


Copyright © 2003 IEEE. All rights reserved.
Authorized licensed use limited to: IEEE - Staff. Downloaded on October 28,2024 at 20:20:02 UTC from IEEE Xplore. Restrictions apply.

INTEL-1011
U.S. Patent 8,219,129

Equipment for detecting movement is authorized in 2400 MHz to 2483.5 MHz at power levels up to 25 mW. See Annex 6 of ERC 70-03E.

### F.3.2 European 868–870 MHz band rules

This information is provided in support of the version of the 900 MHz air interface that has been developed for the European 868–870 MHz band. This air interface provides 20 kb/s raw data rate using 300 kc/s and BPSK modulation. The information shown in Table F.7 is for general purpose SRDs and is extracted from Annex 1 of ERC 70-03E and Table 2 of Appendix 1 of ERC 70-03E [B13] .

**Table F.7—European 868–870 MHz band rules from Annex 1 of ERC 70-03E [B13] (nonspecific SRDs)**

| Frequency (MHz) | TX power | Duty cycle | Comment |
|---|---|---|---|
| 868.0–868.6 | 25 mW | < 1% | |
| 868.7–869.2 | 25 mW | < 0.1% | |
| 869.4–869.65 | 500 mW | < 10% | 25 kHz channel spacing required |
| 869.7–870.0 | 5 mW | 100% | |

For the particular case of nonspecific SRDs in the 868.0–868.6 MHz band, ETSI EN 300 220-1 [B10] and ERC 70-03 [B13] apply. The fundamental parameters of this band are summarized in Table F.8.

**Table F.8—Fundamental 868.0–868.6 MHz band parameters from ETSI 300 220-1 [B10] and ERC 70-03 [B13]**

| Parameter | Specification | Comment |
|---|---|---|
| Carrier frequency | 868.0–868.6 MHz | |
| Transmit power | 25 mW ERP maximum | |
| Transmit duty cycle | < 1% | In any 1 h period |
| Maximum TX on time | 3.6 s | Advisory only as per Appendix 1 of ERC 70-03E. |
| Minimum TX off time | 1.8 s | Advisory only as per Appendix 1 of ERC 70-03E. |
| Antenna | Integral or dedicated required | Type approved with the equipment |

The 1% Transmit Duty Cycle is the main limitation on operation within the 868.0–868.6 MHz band. However, as stated in Annex E, IEEE 802.15.4 devices are intended for low duty cycle operation. It is the responsibility of the higher protocol layers to ensure that these parameters are satisfied.

The Electronic Communications Committee (ECC) within the CEPT is currently studying a number of changes to the SRD rules. Changes that are generally more friendly to SRD operation are proposed for both 2400 MHz and 868 MHz, but the largest benefit is a likely expansion of the limited 868–870 MHz band down to 863 MHz. This would provide multiple additional channels to the single channel now allowed by

Copyright © 2003 IEEE. All rights reserved.

Authorized licensed use limited to: IEEE - Staff. Downloaded on October 28,2024 at 20:20:02 UTC from IEEE Xplore. Restrictions apply.

INTEL-1011
U.S. Patent 8,219,129

the European rules for the European implementation of the IEEE 802.15.4 900 MHz PHY. A broad description of changes proposed at the time of this writing (November 2003) is captured in the report titled "Strategic Plans for the Future Use of the Frequency Bands 862-870 MHz and 2400-2483.5 MHz for Short Range Devices", May 2002. This report is available at www.ero.dk, under "ECC Activities" and the Frequency Management and Short Range Devices links.

Among the suggested 868 MHz band changes are to extend the band to cover from 863 MHz to 870 MHz for nonspecific SRDs using spread spectrum with power levels up to 25 mW. Some relaxation of the duty cycle limits now applying in 868 MHZ to 870 MHz is contemplated. The use of interference avoidance techniques (e.g., frequency agility, dynamic channel assignment, listen before transmit) are encouraged. The band from 862 MHz to 863 MHz, despite its appearance in the title of the document, is not recommended for SRDs due to its current usage for security services.

The changes for 2400 MHZ to 2483.5 MHz have less impact on IEEE 802.15.4, but one change of note is the possible relaxation of the 250 kb/s minimum data rate to qualify for certification under ETSI EN 300 328. This would bring more low-data-rate devices into the band and increase the probability of interference. However, also proposed are more extensive methods of interference avoidance. These are generally in keeping with the interference avoidance and coexistence methodologies already planned for IEEE 802.15.4.

The reader is advised to remain alert to possible rapid changes in the European rules that may occur after this writing. The above noted website is the best known source of information.

## F.4 Known Japanese rules

The Japanese regulatory situation has proven difficult to understand and summarize in depth due to an unfortunate lack of extensive Japanese participation in the early development of the standard, and the resulting language barrier. The following information is summarized from ARIB STD-T66 [B14] in an attempt to be as complete as possible. Although not a direct representation of Japanese regulatory law, this widely used industry standard document is believed by the committee to provide accurate, although incomplete, information. The major known incompleteness is in the areas of detector bandwidth, averaging statistics, and test methodology that can impact the simple data provided. It is also not clear from the standard exactly which specifications carry the force of law and which are recommendations or whether antennas must be permanently fixed to the equipment or have nonstandard connectors (as mandated by the FCC and ETSI).

Table F.9 below summarizes the emissions allowed under ARIB STD-T66 with respect to the 2400–2483.5 MHz band. Other requirements given in that standard include

— Frequency tolerance of ± 50 ppm.
— Maximum antenna gain of 2.14 dB at full power of 10 mW/MHz, although higher gain antennas may be used with a commensurate decrease in maximum transmit power.
— Minimum "spreading factor" of 5, which is most likely another term for processing gain.
— 90% power bandwidth in spread spectrum mode of 500 kHz or more.

## F.5 Emissions specification analysis with respect to known worldwide regulations

Based on the above rules, a set of spurious emission requirements that allows meeting the regulations of the majority of the world's nations may be developed. Where provided, detector specifications and averaging effects may sometimes to be used to relax requirements. Meeting requirements may have a noticeable effect


Copyright © 2003 IEEE. All rights reserved.
Authorized licensed use limited to: IEEE - Staff. Downloaded on October 28,2024 at 20:20:02 UTC from IEEE Xplore. Restrictions apply.

INTEL-1011
U.S. Patent 8,219,129

**Table F.9—Japanese 2400 MHz rules as supplied by ARIB STD-T66 [B14]**

| Emission type | Power level | Comment |
|---|---|---|
| DSSS emission<br>2400–2483.5 MHz | 10 mW/MHz<br>+10 dBm/MHz | Detector type and specifications not supplied. |
| FHSS or FHSS + DSSS<br>2400–2483.5 MHz | 3 mW/MHz<br>+4.77 dBm/MHz | |
| FHSS or FHSS + DSSS<br>2400–2483.5 MHz<br>excluding<br>2427–2470.75 MHz | 10 mW/MHz<br>+4.77 dBm/MHz | |
| Nonspread spectrum<br>2400–2483.5 MHz | 10 mW<br>+10 dBm | |
| Spurious emissions<br>2387–2400 MHz and<br>2483–2496.5 MHz | 25uW or less<br>–16.02 dBm or less | "Average" applicable to close in modulation sidebands and phase noise. Averaging statistics and detector bandwidth not given, but presumaby could be relaxed by averaging if these become known. Without detector bandwidth, phase noise requirements cannot be accurately inferred. |
| Spurious emissions<br>$f$ < 2387 MHz and<br>$f$ > 2496.5 MHz | 2.5 uW or less<br>–26.02 dBm or less | "Average" applicable to far out spurs such as harmonics. Averaging statistics and detector bandwidth not given, but presumaby could be relaxed by averaging if these become known. |
| RX emissions<br>$f$ < 1000 MHz | 4 nW<br>–53.98 dBm | Applicable to receive mode spurs such as local oscillator leakage. |
| RX emissions<br>$f$ > 1000 MHz | 20 nW<br>–46.99 dBm | |

on build of materials (BOM) cost and design choices; therefore, best efforts have been made to infer minimum requirements that support the lowest possible manufacturing cost.

### F.5.1 General analysis and impact of detector bandwidth and averaging rules

The use of averaging and detector bandwidths that allow some relaxation of specifications is described well in the FCC rules and similarly in the Canadian rules. European rules do not allow for averaging, but do provide for detector bandwidths that provide some relaxation also. Japanese detector specifications and averaging allowances are unknown to the committee at the time of this writing. The U.S. rules as related to the restricted bands as described in Section 15.205 of FCC CFR47 appear to be the most restrictive, although analysis using the detector and averaging provisions of Section 15.35 of FCC CFR47 with the parameters of the transmitted data leads to the conclusion that European limits are usually the worst case.

The critical facts relative to the U.S. rules are as follows:

— The allowed ERP of spurious emissions (including harmonics falling in restricted bands) is approximately –41 dBm.
— The detector bandwidth used for certification testing is 1 MHz, and the 3 dB modulation bandwidth at the 2400 MHz fundamental planned under the standard is slightly less than 1 MHz.
— The averaging provisions of Section 15.35 of FCC CRF47 apply, which allow averaging over a 100 ms period with maximum increase in peak power limited to 20 dB. The units of measure are

Copyright © 2003 IEEE. All rights reserved.

Authorized licensed use limited to: IEEE - Staff. Downloaded on October 28,2024 at 20:20:02 UTC from IEEE Xplore. Restrictions apply.

INTEL-1011
U.S. Patent 8,219,129

electric field strength; and although rms is not explicitly stated, rms units are standard for FCC measurements.

The mathematics of FCC duty cycle averaging are not given in the regulations, but may be quickly derived, keeping in mind that units are rms electric field strength (not power). The following definitions are made:

$D_c$ = highest carrier duty cycle over a 100 ms period.

$E_{ss}$ = field strength steady state = allowed rms field strength at a particular frequency without averaging.

$E_{pa}$ = field strength peak allowed when averaging = allowed peak field strength at a particular duty cycle and frequency when averaging. Note that according to FCC convention this "peak" is not the true RF peak. It is the rms carrier strength in volts per meter at the peak of the envelope.

$P_{ss}$ = steady-state power allowed when not averaging.

$P_{pa}$ = peak power allowed when averaging.

The duty cycle is reduced by an average of -3 dB for amplitude shift key (ASK) modulation, but for the 2400 MHz air interface a nearly constant envelope form of modulation (O-QPSK) is used. Thus duty cycle is simply time on a particular channel relative to 100 ms:

$$D_c = \frac{T_{oc}}{0.1} \tag{F.2}$$

The maximum spurious field peak field strength allowed under the rules will then be

$$E_{pa} = \frac{E_{ss}}{D_c} \tag{F.3}$$

This value is the maximum allowed peak of the envelope of a carrier measured in rms electric field strength, up to a limit of 10 times the steady state allowed rms field ($E_{ss}$).

Equation (F.3) can be solved for the allowed duty cycle given peak field strength that a system is capable of and put it into power terms as follows:

$$D_C = \frac{E_{ss}}{E_{pa}} = \sqrt{\frac{P_{ss}}{P_{pa}}} = \sqrt{\frac{AllowedPowerSteadyState}{PeakPowerAllowed}} \tag{F.4}$$

For peak power allowed when averaging using narrowband emitters (bandwidth less than regulatory detector bandwidth), compute

$$P_{pa} = \frac{P_{ss}}{D_c^2} \qquad \text{(narrowband emitters)} \tag{F.5}$$

where the minimum value of $D_c^2$ is 0.01 (maximum boost of 20 dB when duty cycle = 10% or less).

If the protocol is less than 100% duty cycle over 100 ms, then the averaging effect illustrated in Equation (F.5) may be used to reduce restricted band harmonic attenuation requirements, where $P_{pa}$ is


Copyright © 2003 IEEE. All rights reserved.
Authorized licensed use limited to: IEEE - Staff. Downloaded on October 28,2024 at 20:20:02 UTC from IEEE Xplore. Restrictions apply.

INTEL-1011
U.S. Patent 8,219,129

understood to mean peak harmonic power allowed during carrier on times and $P_{ss}$ is the steady state allowed power level in the detector bandwidth. The 500 uV/m allowed steady-state level in restricted bands corresponds to 7.5 x 10^8 W ERP, or –41.2 dBm ERP, which may be a significant level of attenuation to attain in low-cost equipment. A 50% duty cycle over 100 ms could, for example, reduce this difficult requirement by 6 dB.

Beyond averaging, additional help on the required harmonic attenuation levels for restricted band harmonics results from taking the transmitted bandwidth $BW_h$ at the harmonic frequency and regulatory compliance detector bandwidth $BW_d$ (1 MHz above 1000 MHz, and 100 kHz below 1000 MHz) into account. This case of wider band emissions in Equation (F.5) may be extended to

$$HP_{pa} = M\frac{P_{ss}}{D_c^2} \quad \text{(wideband and narrowband emitters)} \tag{F.6}$$

Here $HP_{pa}$ is harmonic power peak allowed and refers to the total harmonic power and not necessarily the harmonic power captured within the detector bandwidth. $M$ is a factor given by

$$M = \begin{cases} 1 & \text{if } BW_h <= BW_d \\ \dfrac{BW_h}{BW_d} = \dfrac{hBW_f}{BW_d} & \text{if } BW_h > BW_d \end{cases} \tag{F.7}$$

where

$h$ is the harmonic number,
$BW_f$ is the effective power bandwidth (approximately the 3 dB bandwidth) at the fundamental.

The total harmonic peak power allowed of Equation (F.6) may be expressed in decibels relative to 1 mW where duty cycle $D_c$ is between 0.1 and 1.0 as given below:

$$HP_{pa(dBm)} = 10\log M - 10\log D_c^2 - 41.2 \tag{F.8}$$

When duty cycle is less than 10%, the total peak harmonic power allowed in decibels relative to 1 mW ERP is given by

$$HP_{pa(dBm)} = 10\log M - 21.2 \tag{F.9}$$

These results may be used to calculate the total harmonic ERP for IEEE 802.15.4 packets as given in F.5.2.

## F.5.2 Frequency spreading and averaging effects specific to IEEE 802.15.4

This subclause is primarily applicable to FCC rules in the United States, but there is also a modest relaxation of European harmonic requirements that may be inferred from detector bandwidth and direct sequence spreading. The United States has more relaxed harmonic requirements except when harmonics fall in restricted bands, in which case, the requirements are then more difficult than Europe, but are then mitigated by the averaging allowances of Section 15.35 of FCC CFR47. Analysis to be shortly reviewed will show that the resulting U.S. requirement is about –20 dBm and is thus approximately 10 dB more relaxed than the –30 dBm European requirement.

Copyright © 2003 IEEE. All rights reserved.

Authorized licensed use limited to: IEEE - Staff. Downloaded on October 28,2024 at 20:20:02 UTC from IEEE Xplore. Restrictions apply.

INTEL-1011
U.S. Patent 8,219,129

Under Section 15.247 of FCC CFR47, harmonics that do not fall in restricted bands have a requirement of –20 dBc as measured in a 100 kHz detector bandwidth when compared to the 100 kHz segment within the fundamental transmission that has the highest power. Because a smaller frequency at the fundamental spreads out to provide the 100 kHz at the harmonic, the requirement is actually even more relaxed that the –20 dBc would indicate. For example, at the 2nd harmonic, if the transmitter harmonic level and filtering effectiveness for a narrowband transmission provided –17 dBc, then once well spread with DSSS, only 50 kHz at the fundamental will spread out to 100 kHz at the 2nd harmonic. The –17 dBc that the transmitter gives narrowband would be increased to –20 dBc when spread. A formula giving the narrowband transmitter harmonic performance that will meet the –20 dBc requirement when spread, where *h* is the harmonic number, is

$$FCCNarrowBandHarmReq(dBc) = 20 - 10\log h \tag{F.10}$$

These relaxed harmonic requirements are part of the attractiveness of DSSS. Unfortunately, low-order harmonics of both 900 MHz and 2400 MHz fall into restricted bands where they must meet the much more stringent requirements of Section 15.209 of FCC CFR47. However, as described in F.5.1, the detector bandwidth and averaging allowances of Section 15.35 of FCC CFR47 may be applied to relax what would otherwise be quite onerous requirements for low-cost equipment. This is done through the application of Equation (F.6) through Equation (F.9) and the general character of the phase shift key (PSK) modulation used in this standard. Filtered BPSK generally has a 3 dB bandwidth about equal to the data rate or to the chip rate in the case of DSSS. O-QPSK generally has a 3 dB bandwidth of about half the data or chip rate. The 2400 MHz air interface with a 2 Mchip/s chip rate has approximately a 1 MHz 3dB fundamental power bandwidth. The 2nd, 3rd, and 5th harmonics of 2400 MHz fall into restricted bands where the general limit is –41.2 dBm ERP. The 900 MHz IEEE 802.15.4 air interface uses 600 kc/s BPSK; therefore, has about a 600 kHz 3 dB bandwidth. The 3rd and 5th harmonics fall into restricted bands. Both bands benefit from the spreading of harmonics beyond the 1 MHz detector bandwidth used above 1 MHz; thus M > 1 applies. Time averaging may be combined with frequency spreading via Equation (F.6), Equation (F.8), and Equation (F.9) to further reduce harmonic requirements if a particular application can guarantee transmissions less than 100 ms. The packet lengths used in IEEE Std 802.15.4-2003 do allow transmissions of less than 100 ms with low duty cycle. The packet length varies depending on the data carried, with a payload that may vary from 0 to 127 bytes, always prefixed with 6 preamble and header bytes. The 2400 MHz PHY has a maximum packet time of 4.256 ms, and the 915 MHz PHY has a maximum packet time of 26.6 ms.

Table F.10 captures the *total* harmonic power in decibels relative to 1 mW ERP that may be transmitted for the two U.S. PHYs for harmonics that land in the restricted bands. The cases shown are for maximum length packets with 127 bytes of data and for nominal length packets with 40 bytes of data.

**Table F.10—Harmonic allowed worst cases interpreted from FCC rules and IEEE 802.15.4 duty cycles**

| PHY | Harmonic/M | Dc maximum/nomimal packet | Allowed harmonic ERP for maximum packet (dBm) | Allowed harmonic ERP for nomimal packet (dBm) |
|---|---|---|---|---|
| 900 MHz | 3/1.8 | 0.266/0.92 | –27.1[a] | –18.6[a] |
| 900 MHz | 5/3 | 0.266/0.92 | –24.9[a] | –16.4[a] |
| | | | | |
| 2400 MHz | 2/2 | 0.04256/0.01472 | –18.2[b] | –18.2[c3] |


Copyright © 2003 IEEE. All rights reserved.
Authorized licensed use limited to: IEEE - Staff. Downloaded on October 28,2024 at 20:20:02 UTC from IEEE Xplore. Restrictions apply.

INTEL-1011
U.S. Patent 8,219,129

**Table F.10—Harmonic allowed worst cases interpreted from FCC rules and IEEE 802.15.4 duty cycles *(continued)***

| PHY | Harmonic/M | Dc maximum/nomimal packet | Allowed harmonic ERP for maximum packet (dBm) | Allowed harmonic ERP for nomimal packet (dBm) |
|---|---|---|---|---|
| 2400 MHz | 3/3 | 0.04256/0.01472 | –16.4[b] | –16.4[3] |
| 2400 MHz | 5/5 | 0.04256/0.01472 | –14.2[b] | –14.2[3] |

[a]The 900 MHz harmonic powers assume a single packet per 100 ms. The maximum packet time is 26.6 ms.
[b]The 2400 MHz harmonic power for maximum length packets applies up to 2 packets per 100 ms. Because the maximum packet time is 4.256 ms, the 2 packet case still meets the less-than-10% duty cycle requirement for maximum boost of 20 dB in harmonic relaxation requirements.
[c]The 2400 MHz harmonic power for nominal length packets applies up to 6 packets per 100 ms. Because the nominal packet time is 1.472 ms, the 6 packet case still meets the less-than-10% duty cycle requirement for maximum boost of 20 dB in harmonic relaxation requirements.

When these relaxations are taken into account, it must also be considered that whip antennas will generally re-resonate on odd harmonics and show a higher directivity than they do at the fundamental. Several decibels of safety margin must be left to deal with this factor. It must also be understood that, in giving the results of Table F.10 in total harmonic power, less harmonic power will be measured when using the standard measurement bandwidth of 1 MHz, due to the fact that the harmonics of the DSSS transmission are greater than 1 MHz. The factor 10logM for each harmonic gives the approximate decibel measure of how much less the harmonic measured at the center of the transmitted harmonic is than the total harmonic power.

Note that the European requirement for harmonics of 2400 MHz is –30 dBm in a 1 MHz detector bandwidth, with no provision for time averaging. The actual harmonic requirement of the transmitter system is similar to Equation (F.10) and may be written as

$$EuropeanNarrowBandHarmReq(dBm) = -30 + 10\log h \qquad \text{(F.11)}$$

To use this equation, one turns on a steady state carrier without modulation or chipping and measures harmonic performance either via cable or via open air link (taking antenna aperture into account). If the measured performance is better than the requirement given in Equation (F.11), then the system should pass.

In general the European requirement for 2400 GHz is about 10 dB better than the FCC requirements, taking restricted bands and averaging into account; therefore, a product that passes European harmonic requirements should have a comfortable margin for the U.S. market.

## F.6 Summary of out-of-band spurious emissions limits

Table F.11 summarizes the allowed spurious emissions for both U.S. and European limits. The levels below 30 MHz are provided because radiation from clocks and other digital noise sources can sometimes exceed allowed levels. Known Japanese limits were given in Table F.9.

All FCC emissions are steady-state limits and, when above 1000 MHz, could be relaxed via 15.35 time averaging and detector bandwidth frequency spreading. For European operation, similar detector bandwidths apply, but not the time averaging effects. The –30 dBm European harmonic requirement, relaxed

Copyright © 2003 IEEE. All rights reserved.

Authorized licensed use limited to: IEEE - Staff. Downloaded on October 28,2024 at 20:20:02 UTC from IEEE Xplore. Restrictions apply.

INTEL-1011
U.S. Patent 8,219,129

as given in Equation (F.11), provides a worst-case level of required harmonic performance that is in general about 10 dB more stringent that the U.S. requirements when analyzed in light of Section 15.35 of FCC CFR47.

**Table F.11—Out-of-band spurious emissions power limits for the United States and Europe**

| Frequency band or harmonics | FCC | ETSI active mode | ETSI standby mode |
|---|---|---|---|
| 9–490 kHz | 2400/kHz uVrms/m/100 kHz @300 m | | |
| 490kHz–1.705 MHz | 2400/kHz uVrms/m/100 kHz @30 m | | |
| 1.705–30 MHz | 30 uVrms/m/100 kHz@30 m –45.7 dBm EIRP | | |
| 30–88 MHz | 100 uVrms/m/100 kHz@ 3 m –55.2 dBm EIRP | –30 dBm EIRP/100 kHz | –57 dBm EIRP/100 kHz |
| 88–216 MHz | 150 uVrms/meter100 kHz @ 3 m –51.7 dBm EIRP | –30 dBm EIRP/100 kHz | –57 dBm EIRP/100 kHz |
| 216–960 MHz | 200 uVrms/m/100 kHz @ 3 m –49.2 dBm EIRP | –30 dBm EIRP/100 kHz | –57 dBm EIRP/100 kHz |
| 960–1000 MHz | 500 uVrms/m/100 kHz @ 3 m –41.2 dBm EIRP | –30 dBm EIRP/100 kHz | –57 dBm EIRP/100 kHz |
| 1GHz–12.5 GHz | 500 uVrms/m/MHz@ 3 m –41.2 dBm EIRP | –30 dBm EIRP/MHz | –47 dBm EIRP/MHz |
| 1.8–1.9 GHz and 5.15–5.3 GHz | 500 uVrms/m/MHz@ 3 m –41.2 dBm EIRP | –47 dBm EIRP/MHz | –47 dBm EIRP/ MHz |

## F.7 Phase noise requirements inferred from regulatory limits

Regulatory spurious emissions limits with known detector bandwidths may be inferred to set a phase noise limit on the transmitter carrier generating synthesizer system.

For European 2400 MHz operation the wide spurious limit under Section 5.2.4 of ETSI EN 300 328 is –80 dBm/Hz from 1 GHz to 12.5 GHz. Because the nearest channel to the band edge in the 2400 MHZ to 2483.5 MHz band is 2480 MHz, this rule sets a worst-case phase noise at 3.5 MHz offset of –80 dBm/Hz. This is converted to phase noise relative to the carrier by taking into account the direct sequence spreading and the maximum carrier power. The phase noise is relaxed by the spreading gain (about 9 dB for the 2400 MHz air interface), allowing a maximum unspread phase noise of –71 dBm/Hz at 3.5 MHz offset. This specification must then improve 1 dB for each decibel the maximum transmitted power can exceed 0 dBm. If the maximum transmit power is +10 dBm, the 2400 MHz product marketed in Europe must show a total phase noise at 2400 MHz before spreading of about –81 dBc/Hz at 3.5 MHz offset. This is a relaxed phase noise requirement, and it will be shown below that U.S. rules will set a worst case for the 2400 MHz air interface.

For the European 868 MHz band operation, the transmit center frequency is 868.3 MHz. Neglecting the slight frequency error of the crystal timebase, the allowed unspread transmitted phase noise is thus –80 dBm/Hz at 300 kHz. The spreading gain of the 20 kb/s, 300 kc/s BPSK 868 MHz air interface is about 15 dB (300 kHz RF bandwidth divided by 10 kHz baseband bandwidth). The allowed phase noise relative to


Copyright © 2003 IEEE. All rights reserved.
Authorized licensed use limited to: IEEE - Staff. Downloaded on October 28,2024 at 20:20:02 UTC from IEEE Xplore. Restrictions apply.

INTEL-1011
U.S. Patent 8,219,129

carrier for a 0 dBm transmit power is thus about –65 dBc/Hz at 300 kHz offset. For a +10 dBm maximum transmit power, the required unspread phase noise of the 868 MHz air interface is thus about –75 dBc/Hz at 300 kHz offset. Because the 868 MHz offset is so much less, this requirement is more difficult than the –81 dBc/Hz at 3.5 MHz requirement of the 2400 MHz air interface. However, this level is still fully within the achievable performance of an integrated design.

U.S. requirements on phase noise for 2400 MHz are more restrictive, although still highly attainable with a fully integrated design. There is no general "wideband" limit, only the spurious levels appropriate to a particular service and the general level over the restricted bands. However, there is a restricted band from 2483.5 MHz to 2500 MHz, and the general level of 500 uV/m at 3 m in a 1 MHz detector bandwidth applies. The emission level allowed there is thus –41.2 dBm/MHz ERP or an average of –101.2 dBm/Hz. The spreading gain of 9 dB raised the allowed transmitted phase noise for a 0 dBm transmission to about –92 dBm/Hz at 3.5 MHz offset (the highest channel is 2480 MHz). At +10 dBm, the phase noise requirement is thus about –102 dBc/Hz at 3.5 MHz offset.

For the U.S. 902–928 MHz band the nearest restricted band edge is 960 MHz, the same frequency where the general level rises from 200 to 500 uV/m. The detector bandwidth used is 100 kHz, so the transmitted phase noise is limited to about –41 dBm/100 kHz, or –91 dBm/Hz, at 32 MHz offset. The processing gain for the U.S. 900 MHz band is about 15 dB; therefore, the transmitted phase noise for a 0 dBm transmitter is limited to about –76 dBm/Hz at 32 MHz offset, or –86 dBc/Hz for a +10 dBm transmit power level. This requirement is very relaxed.

Examining the effect of general spurious requirements in the United States (Section 15.247 (c) of FCC CFR47), the spurious limit that falls out of band but not in the restricted bands is –20 dBc/100 kHz, as compared to the 100 kHz segment in band with the most power. Because the comparison uses the same 100 kHz bandwidth, when interpreted as phase noise the limit is –20 dBc at the band edge. This level is too relaxed to set a worst case and may thus be ignored.

The Japanese phase noise requirement cannot be determined without knowledge of test detector bandwidths used to meet the close-in spurious requirements of ARIB STD-T66 [B14]. However, if the detector bandwidth above 1000 MHz is the commonly used international standard of 1 MHz, then an accurate estimate can be made. The Japanese requirement from 2483.5 MHz to 2496.5 MHz is –16.02 dBm. In a 1 MHz bandwidth, this would translate to a phase noise of –76 dBm/Hz at 3.5 MHz offset, reduced to –67 dBm by the spreading gain. Because it would take a detector bandwidth of over 100 MHz for the Japanese requirement to be more severe than the U.S. one, the U.S. requirement almost certainly remains the worst case.

All the phase noise numbers given above are slightly conservative in that they assume a flat phase noise over the detector bandwidth, whereas the actual phase noise continues to decline over the detector bandwidth.

In summary, for 2400 MHz operation, the U.S. rules set a worst case for unspread carrier phase noise of about –102 dBc/Hz at 3.5 MHz offset for a +10 dBm transmit power level. For the 900 MHz air interfaces, the European rules set a worst case of about –75 dBc/Hz at 300 kHz offset for a +10 dBm power level.

## F.8 Summary of transmission power levels

Table F.12 summarizes the known maximum transmit power levels for the targeted frequency bands in various geographical regions.

Copyright © 2003 IEEE. All rights reserved.

Authorized licensed use limited to: IEEE - Staff. Downloaded on October 28,2024 at 20:20:02 UTC from IEEE Xplore. Restrictions apply.

INTEL-1011
U.S. Patent 8,219,129

**Table F.12—Maximum transmit power levels**

| Frequency band | Geographical region | Maximum conductive power/ radiated field limit | Regulatory document |
|---|---|---|---|
| 2400 MHz | Japan | 10 mW/MHz | ARIB STD-T66 [B14] |
| | Europe (except Spain and France) | 100 mW EIRP or<br>10 mW/MHz peak power density | ETSI EN 300 328 |
| | United States | 1000 mW | Section 15.247 of FCC CFR47 [B14] |
| | Canada | 1000 mW (with some limitations on installation location) | GL-36 [B15] |
| 902–928 MHz | United States | 1000 mW | Section 15.247 of FCC CFR47 [B14] |
| 868 MHz | Europe | 25 mW | ETSI EN 300 220 [B10] |


Copyright © 2003 IEEE. All rights reserved.
Authorized licensed use limited to: IEEE - Staff. Downloaded on October 28,2024 at 20:20:02 UTC from IEEE Xplore. Restrictions apply.

INTEL-1011
U.S. Patent 8,219,129

# Annex G

(informative)

# Bibliography

## G.1 General

[B1] IEEE 100™, *The Authoritative Dictionary of IEEE Standards Terms*, Seventh Edition. [8]

[B2] IEEE Std 802.11b-1999, IEEE Standard for Information Technology—Telecommunications and information exchange between systems—Local and metropolitan area networks—Specific Requirements—Part 11: Wireless LAN Medium Access Control (MAC) and Physical Layer (PHY) Specifications: Higher-Speed Physical Layer Extension in the 2.4 GHz Band.

[B3] IEEE P802.15, Draft Standard for Information Technology—Telecommunications and information exchange between systems—Local and metropolitan area networks—Specific Requirements—Part 15: Wireless Medium Access Control (MAC) and Physical Layer (PHY) Specifications for High Rate Wireless Personal Area Networks (WPAN).

[B4] IEEE Std 802.15.1-2002, IEEE Standard for Information Technology—Telecommunications and information exchange between systems—Local and metropolitan area networks—Specific Requirements—Part 15.1: Wireless Medium Access Control (MAC) and Physical Layer (PHY) Specifications for Wireless Personal Area Networks (WPANs).

[B5] IEEE Std 802.15.2-2003, IEEE Standard for Information Technology—Telecommunications and information exchange between systems—Local and metropolitan area networks—Specific Requirements—Part 15.2: Coexistence of Wireless Personal Area Networks with Other Wireless Devices Operating in Unlicensed Frequency Bands.

[B6] IEEE Std 802.15.3-2003, IEEE Standard for Information Technology—Telecommunications and information exchange between systems—Local and metropolitan area networks—Specific Requirements—Part 15.3: Wireless Medium Access Control (MAC) and Physical Layer (PHY) Specifications for High Rate Wireless Personal Area Networks (WPAN).

[B7] IEEE Std 802.16-2001, Information Technology—Telecommunications and information exchange between systems—Local and metropolitan area networks—Specific Requirements—Part 16: Air Interface for Fixed Broadband Wireless Access Systems.

[B8] Sklar, Bernard, *Digital Communications: Fundamentals and Applications*. New Jersey: Prentice Hall, 1988.

## G.2 Regulatory documents

[B9] ARIB STD-T66, Second Generation Low Power Data Communication System/Wireless LAN System 1999.12.14 (H11.12.14) Version 1.0. Association of Radio Industries and Businesses (ARIB). Japan.[9]

[8]IEEE publications are available from the Institute of Electrical and Electronics Engineers, Inc., 445 Hoes Lane, P.O. Box 1331, Piscataway, NJ 08855-1331, USA (http://standards.ieee.org/).
[9]ARIB publications are available at (http://www.arib.or.jp).

Copyright © 2003 IEEE. All rights reserved.

Authorized licensed use limited to: IEEE - Staff. Downloaded on October 28,2024 at 20:20:02 UTC from IEEE Xplore. Restrictions apply.

INTEL-1011
U.S. Patent 8,219,129

[B10] ETSI EN 300 220-1, Electromagnetic Compatibility and Radio Spectrum Matters (ERM); Short Range Devices (SRDs); Radio equipment to be used in the 25 MHz to 1 000 MHz frequency range with power levels ranging up to 500 mW; Part 1: Technical characteristics and test methods.[10]

[B11] ETSI EN 300 328-1, Electromagnetic Compatibility and Radio Spectrum Matters (ERM); Wideband Transmission systems; Data transmission equipment operating in the 2,4 GHz ISM band and using spread spectrum modulation techniques; Part 1: Technical characteristics and test conditions.

[B12] ETSI EN 300 328-2, Electromagnetic Compatibility and Radio Spectrum Matters (ERM); Wideband Transmission systems; Data transmission equipment operating in the 2,4 GHz ISM band and using spread spectrum modulation techniques; Part 2: Harmonized EN covering essential requirements under article 3.2 of the R&TTE Directive.

[B13] ERC Recommendation 70-03, Relating to the use of Short Range Devices (SRDs), April 2002.[11]

[B14] FCC Code of Federal Register (CFR), Part 47, Section 15.35, Section 15.205, Section 15.209, Section 15.231, Section 15.247, and Section 15.249. United States.[12]

[B15] Industry Canada (IC) Document: GL-36. Canada.[13]

[10]ETSI publications are available from the European Telecommunications Standards Institute (http://etsi.org).

[11]ERC publications are available from Global Engineering Documents, 15 Inverness Way East, Englewood, Colorado 80112, USA (http://global.ihs.com/).

[12]FCC publications are available from Global Engineering Documents, 15 Inverness Way East, Englewood, Colorado 80112, USA (http://global.ihs.com/).

[13]IC publications are available from Global Engineering Documents, 15 Inverness Way East, Englewood, Colorado 80112, USA (http://global.ihs.com/).


Copyright © 2003 IEEE. All rights reserved.
Authorized licensed use limited to: IEEE - Staff. Downloaded on October 28,2024 at 20:20:02 UTC from IEEE Xplore. Restrictions apply.

INTEL-1011
U.S. Patent 8,219,129

IEEE.org IEEE *Xplore* IEEE SA IEEE Spectrum More Sites Donate Cart Create Account Personal Sign In

Browse My Settings Help Access provided by: **IEEE - Staff** Sign Out

Access provided by: **IEEE - Staff** Sign Out

All

ADVANCED SEARCH

Standards

# 802.15.4-2003 - IEEE Standard for Telecommunications and Information Exchange Between Systems - LAN/MAN Specific Requirements - Part 15: Wireless Medium Access Control (MAC) and Physical Layer (PHY) Specifications for Low Rate Wireless Personal Area Networks (WPAN)

**Publisher: IEEE**

Cite This PDF

Versions

**Superseded by IEEE Std 802.15.4-2006 (Revision of IEEE Std 802.15.4-2003)**
**Status: Superseded**

Results | < Previous | Next >

INTEL-1011
U.S. Patent 8,219,129

74
Cites in Papers

351
Cites in Patents

4524
Full Text Views

Alerts

Manage Content Alerts

Add to Citation Alerts

Abstract

Figures

References

Citations

Keywords

Definitions

Metrics

Versions

Footnotes

Downl

PDF

**Abstract:**
Superseded by IEEE Std 802.15.4-2006 IEEE Std 802.15.4-2003 defined the protocol and compatible interconnection for data communication devices using low- data-rate, low-p... **View more**

**Scope:**This project will define the PHY and MAC specifications for low data rate wireless connectivity with fixed, portable and moving devices with no battery or very limited ba... **View more**

**Purpose:**To provide a standard for ultra low complexity, ultra low cost, ultra low power consumption and low data rate wireless connectivity among inexpensive devices. The raw dat... **View more**

## Metadata

First Page of the Article

INTEL-1011
U.S. Patent 8,219,129

IEEE Standards

IEEE Std 802.15.4™-2003

# 802.15.4™

IEEE Standard for
Information technology—
Telecommunications and information
exchange between systems—
Local and metropolitan area networks—
Specific requirements

## Part 15.4: Wireless Medium Access Control (MAC) and Physical Layer (PHY) Specifications for Low-Rate Wireless Personal Area Networks (LR-WPANs)

IEEE Computer Society

Sponsored by the
LAN/MAN Standards Committee

INTEL-1011
U.S. Patent 8,219,129

IEEE

Published by
The Institute of Electrical and Electronics Engineers, Inc.
3 Park Avenue, New York, NY 10016-5997, USA

1 October 2003

Print: SH95127
PDF: SS95127

**Abstract:**
Superseded by IEEE Std 802.15.4-2006 IEEE Std 802.15.4-2003 defined the protocol and compatible interconnection for data communication devices using low- data-rate, low-power, and low-complexity short-range radio frequency (RF) transmissions in a wireless personal area network (WPAN). This revision extends the market applicability of IEEE Std 802.15.4, removes ambiguities in the standard, and makes improvements revealed by implementations of IEEE Std 802.15.4-2003.

**Scope:**
This project will define the PHY and MAC specifications for low data rate wireless connectivity with fixed, portable and moving devices with no battery or very limited battery consumption requirements typically operating in the Personal Operating Space (POS) of 10 meters (See 16a). It is foreseen that depending on the application that a longer range at a lower data rate may be an acceptable trade-off (See 16b). It is the intent of this project to work toward a level of coexistence with other wireless devices in conjunction with Coexistence Task Groups, such as 802.15.2.and 802.11/ETSI-BRAN/MMAC 5GSG.

**Purpose:**
To provide a standard for ultra low complexity, ultra low cost, ultra low power consumption and low data rate wireless connectivity among inexpensive devices. The raw data rate will be high enough (maximum of 250kbs) to satisfy a set of simple needs such as interactive toys, but scaleable down to the needs of sensor and automation needs (20kbps or below) for wireless communications.

**Date of Publication:** 01 October 2003 **DOI:** 10.1109/IEEESTD.2003.94389

INTEL-1011
U.S. Patent 8,219,129

**Electronic ISBN:**978-0-7381-3687-5

**ICS Code:** 35.110 35.100.20 35.100.10 - Networking Data link layer Physical layer

**Persistent Link:** https://ieeexplore.ieee.org/servlet/opac?punumber=8762

**Publisher:** IEEE

First Page of the Article



INTEL-1011
U.S. Patent 8,219,129

IEEE Standards

IEEE Std 802.15.4™-2003

# 802.15.4™

IEEE Standard for
Information technology—
Telecommunications and information
exchange between systems—
Local and metropolitan area networks—
Specific requirements

## Part 15.4: Wireless Medium Access Control (MAC) and Physical Layer (PHY) Specifications for Low-Rate Wireless Personal Area Networks (LR-WPANs)

IEEE Computer Society

Sponsored by the
LAN/MAN Standards Committee

INTEL-1011
U.S. Patent 8,219,129

< Previous | Back to Results | Nex

Hide First Page Preview

Figures

References

Citations

Keywords

Definitions

Metrics

Versions

Show More

Footnotes

**More Like This**

P802.15.4-REVc/D00, Apr 2015 - IEEE Draft Standard for Low-Rate Wireless Personal Area Networks (WPANs)
IEEE P802.15.4-REVc/D00, April 2015 (Revision of IEEE Std 802.15.4-2011)
Published: 2015

8802-15-4-2018 - ISO/IEC/IEEE International Standard - Information technology--Telecommunications and information exchange between systems--Local and metropolitan area networks--Sp...
ISO/IEC/IEEE 8802-15-4:2018(E)
Published: 2018

INTEL-1011
U.S. Patent 8,219,129

IEEE Personal Account

CHANGE USERNAME/PASSWORD

Purchase Details

PAYMENT OPTIONS

VIEW PURCHASED DOCUMENTS

Profile Information

COMMUNICATIONS PREFERENCES

Need Help?

US & CANADA: +1 800 678 4333

Follow



INTEL-1011
U.S. Patent 8,219,129

PROFESSION AND EDUCATION

TECHNICAL INTERESTS

WORLDWIDE: +1 732 981 0060

CONTACT & SUPPORT

About IEEE *Xplore* | Contact Us | Help | Accessibility | Terms of Use | Nondiscrimination Policy | IEEE Ethics Reporting | Sitemap | IEEE Privacy Policy

A not-for-profit organization, IEEE is the world's largest technical professional organization dedicated to advancing technology for the benefit of humanity.

© Copyright 2024 IEEE - All rights reserved, including rights for text and data mining and training of artificial intelligence and similar technologies.

**IEEE Account**

» Change Username/Password

» Update Address

**Purchase Details**

» Payment Options

» Order History

» View Purchased Documents

**Profile Information**

» Communications Preferences

» Profession and Education

» Technical Interests

**Need Help?**

» **US & Canada:** +1 800 678 4333

» **Worldwide:** +1 732 981 0060



INTEL-1011
U.S. Patent 8,219,129

» Contact & Support

About IEEE *Xplore* | Contact Us | Help | Accessibility | Terms of Use | Nondiscrimination Policy | Sitemap | Privacy & Opting Out of Cookies

A not-for-profit organization, IEEE is the world's largest technical professional organization dedicated to advancing technology for the benefit of humanity.
© Copyright 2024 IEEE - All rights reserved. Use of this web site signifies your agreement to the terms and conditions.



INTEL-1011
U.S. Patent 8,219,129