US007209955B1

(12) **United States Patent**
Major et al.

(10) **Patent No.: US 7,209,955 B1**
(45) **Date of Patent: Apr. 24, 2007**

(54) **NOTIFICATION SYSTEM AND METHOD FOR A MOBILE DATA COMMUNICATION DEVICE**

(75) Inventors: **Harry Major**, Waterloo (CA); **Krishna K. Pathiyal**, Waterloo (CA); **Gary P. Mousseau**, Waterloo (CA); **Mihal Lazaridis**, Waterloo (CA)

(73) Assignee: **Research In Motion Limited**, Waterloo (CA)

(*) Notice: Subject to any disclaimer, the term of this patent is extended or adjusted under 35 U.S.C. 154(b) by 0 days.

(21) Appl. No.: **09/545,962**

(22) Filed: **Apr. 10, 2000**

Related U.S. Application Data

(63) Continuation-in-part of application No. 09/087,623, filed on May 29, 1998, now Pat. No. 6,219,694.

(51) **Int. Cl.**
G06F 15/16 (2006.01)

(52) **U.S. Cl.** **709/207**

(58) **Field of Classification Search** 340/825.44, 340/7.59, 7.58, 7.1, 7.29, 7.62; 709/204–207; 455/566, 557

See application file for complete search history.

(56) **References Cited**

U.S. PATENT DOCUMENTS

4,106,060	A		8/1978	Chapman, Jr.
4,438,433	A	*	3/1984	Smoot et al. 340/7.59
4,558,454	A	*	12/1985	Hills et al.
4,644,351	A	*	2/1987	Zabarsky et al.
4,695,880	A		9/1987	Johnson et al.
4,697,281	A		9/1987	O'Sullivan
4,713,780	A		12/1987	Schultz et al.
4,837,798	A		6/1989	Cohen et al.
4,837,800	A		6/1989	Freeburg et al.
4,856,047	A		8/1989	Saunders
4,928,096	A		5/1990	Leonardo et al.
4,951,044	A		8/1990	Nelson et al.
4,980,907	A		12/1990	Raith et al.
5,008,926	A		4/1991	Misholi
5,043,721	A		8/1991	May
5,058,431	A	*	10/1991	Karwacki
5,086,502	A		2/1992	Malcolm
5,125,021	A		6/1992	Lebowitz

(Continued)

FOREIGN PATENT DOCUMENTS

AU	78434/98	7/1997
EP	0 001 552	5/1979
EP	0 617 373 A2	4/1994

(Continued)

OTHER PUBLICATIONS

Briere et al., One mailbox, just like the old times, Network World, Framingham, Apr. 21, 1997, vol. 14, pp. 21ff.*

Copy of DTS Wireless Website located at D.R.L. http://www.dtswireless.com.

"3Com PalmPilot Gets Wireless Link for E-Mail", Spooner, John G., PC Week, Dec. 8, 1997.

(Continued)

Primary Examiner—Krisna Lim
Assistant Examiner—Sean Reilly
(74) *Attorney, Agent, or Firm*—Danamraj & Youst, P.C.

(57) **ABSTRACT**

A notification system and method for a mobile data communication device is provided. A clientbased software program operates at the mobile communication device to manage and execute, user-selectable notification schemes ("notification module") in response to data items transmitted to the mobile device from a host system via a communications network. The user configures the notification module to execute certain audible, visual and/or tactile notifications in response to certain types of messages being received at the mobile device.

8 Claims, 8 Drawing Sheets

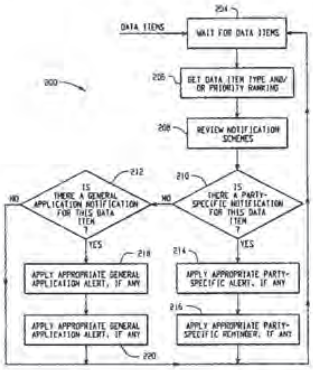

U.S. PATENT DOCUMENTS

5,127,041	A		6/1992	O'Sullivan	
5,136,291	A		8/1992	Teague	
5,157,660	A		10/1992	Kuwahara et al.	
5,159,592	A		10/1992	Perkins	
5,177,680	A		1/1993	Tsukino et al.	
5,181,200	A		1/1993	Harrison	
5,265,033	A		11/1993	Vajk et al.	
5,283,887	A		2/1994	Zachery	
5,293,250	A		3/1994	Okumura et al.	
5,299,255	A		3/1994	Iwaki et al.	
5,307,059	A	*	4/1994	Connary et al.	340/4.62
5,313,582	A		5/1994	Hendel et al.	
5,315,635	A		5/1994	Kane et al.	
5,333,152	A		7/1994	Wilber	
5,333,266	A		7/1994	Boaz et al.	
5,392,390	A		2/1995	Crozier	
5,406,557	A		4/1995	Baudoin	
5,410,543	A		4/1995	Seitz et al.	
5,416,473	A		5/1995	Dulaney, III et al.	
5,436,960	A		7/1995	Campana, Jr. et al.	
5,438,611	A		8/1995	Campana, Jr. et al.	
5,452,356	A		9/1995	Albert	
5,479,472	A		12/1995	Campana, Jr. et al.	
5,493,692	A		2/1996	Theimer et al.	
5,495,484	A		2/1996	Self et al.	
5,557,659	A	*	9/1996	Hyde-Thomson	
5,559,800	A		9/1996	Mousseau et al.	
5,572,528	A		11/1996	Shuen	
5,579,472	A		11/1996	Keyworth, II et al.	
5,588,009	A		12/1996	Will	
5,598,536	A		1/1997	Slaughter, III et al.	
5,603,054	A		2/1997	Theimer et al.	
5,604,491	A	*	2/1997	Coonley et al.	340/7.59
5,604,788	A		2/1997	Tett	
5,625,670	A		4/1997	Campana, Jr. et al.	
5,627,829	A		5/1997	Gleeson et al.	
5,630,060	A		5/1997	Tang et al.	
5,633,810	A		5/1997	Mandal et al.	
5,638,450	A		6/1997	Robson	
5,641,946	A		6/1997	Campana, Jr. et al.	
5,666,530	A		9/1997	Clark et al.	
5,666,553	A		9/1997	Corzier	
5,673,322	A		9/1997	Pepe et al.	
5,705,995	A	*	1/1998	Laflin et al.	340/7.59
5,727,202	A		3/1998	Kucala	
5,729,735	A		3/1998	Meyering	
5,737,531	A		4/1998	Ehley	
5,742,905	A		4/1998	Pepe et al.	
5,751,960	A	*	5/1998	Matsunaga	
5,751,971	A		5/1998	Dobbins et al.	
5,754,954	A		5/1998	Cannon et al.	
5,757,901	A		5/1998	Hiroshige	
5,761,416	A		6/1998	Mandal et al.	
5,764,639	A		6/1998	Staples et al.	
5,765,170	A		6/1998	Morikawa	
5,781,614	A		7/1998	Brunson	
5,781,901	A		7/1998	Kuzma	
5,790,790	A		8/1998	Smith et al.	
5,790,974	A		8/1998	Tognazzini	
5,796,806	A	*	8/1998	Birckbichler	379/88.2
5,812,671	A	*	9/1998	Ross	
5,812,819	A		9/1998	Rodwin et al.	
5,813,016	A		9/1998	Suminmto	
5,815,081	A	*	9/1998	Motohashi	340/7.58
5,819,172	A		10/1998	Camapana, Jr. et al.	
5,819,284	A		10/1998	Farber et al.	
5,822,434	A		10/1998	Caronni et al.	
5,826,062	A		10/1998	Fake, Jr. et al.	
5,838,252	A	*	11/1998	Kikinis	
5,838,926	A		11/1998	Yamagishi	
5,844,969	A		12/1998	Goldman et al.	
5,850,219	A		12/1998	Kumomura	
5,862,325	A	*	1/1999	Reed et al.	
5,867,660	A		2/1999	Schmidt et al.	
5,878,434	A		3/1999	Draper et al.	
5,900,875	A	*	5/1999	Haitani et al.	
5,903,723	A		5/1999	Beck et al.	
5,905,777	A		5/1999	Foladare et al.	
5,917,629	A	*	6/1999	Hortensius et al.	
5,928,329	A		7/1999	Clark et al.	
5,937,161	A		8/1999	Mulligan et al.	
5,941,956	A	*	8/1999	Shirakihara et al.	
5,943,426	A	*	8/1999	Frith et al.	
5,953,322	A		9/1999	Kimball	
5,960,406	A	*	9/1999	Rasansky et al.	
5,961,590	A		10/1999	Mendez et al.	
5,966,663	A	*	10/1999	Gleason	
5,968,131	A	*	10/1999	Mendez et al.	
5,969,636	A	*	10/1999	Parvulescu et al.	340/7.53
5,973,612	A	*	10/1999	Deo et al.	340/825.44
5,974,180	A		10/1999	Schwendeman	
5,974,238	A		10/1999	Chase, Jr.	
5,978,689	A	*	11/1999	Tuoriniemi et al.	455/569
5,978,837	A		11/1999	Foladare et al.	
5,983,073	A		11/1999	Ditzik	
5,987,508	A	*	11/1999	Agraharam et al.	
5,995,597	A		11/1999	Woltz et al.	
6,000,000	A		12/1999	Hawkins et al.	
6,002,769	A	*	12/1999	McGough	
6,006,274	A		12/1999	Hawkins et al.	
6,014,429	A		1/2000	LaPorta et al.	
6,018,762	A	*	1/2000	Brunson et al.	
6,018,782	A	*	1/2000	Hartmann	
6,023,000	A	*	2/2000	Fritz-Langhals et al.	
6,023,700	A		2/2000	Owens et al.	
6,023,708	A	*	2/2000	Mendez et al.	
6,034,621	A		3/2000	Kaufman	
6,044,205	A	*	3/2000	Reed et al.	
6,052,442	A	*	4/2000	Cooper et al.	
6,052,563	A		4/2000	Macko	
6,052,735	A	*	4/2000	Ulrich et al.	709/236
6,058,431	A		5/2000	Srisuresh et al.	
6,073,165	A		6/2000	Narasimhan et al.	
6,078,826	A	*	6/2000	Croft et al.	455/574
6,078,921	A	*	6/2000	Kelley	
6,084,969	A	*	7/2000	Wright et al.	
6,085,192	A	*	7/2000	Mendez et al.	
6,085,232	A		7/2000	Kikinis	
6,091,951	A		7/2000	Sturniolo et al.	
6,092,114	A		7/2000	Shaffer et al.	
6,092,191	A		7/2000	Shimbo et al.	
6,101,531	A		8/2000	Eggleston et al.	
6,115,394	A		9/2000	Balachandran et al.	
6,115,736	A		9/2000	Devarakonda et al.	
6,119,167	A	*	9/2000	Boyle et al.	
6,125,281	A		9/2000	Wells et al.	
6,125,369	A		9/2000	Wu et al.	
6,130,892	A		10/2000	Short et al.	
6,138,089	A	*	10/2000	Guberman	
6,138,146	A	*	10/2000	Moon et al.	709/206
6,141,690	A		10/2000	Weiman	
6,157,318	A	*	12/2000	Minata	340/7.58
6,157,630	A	*	12/2000	Adler et al.	
6,157,950	A		12/2000	Krishman	
6,163,274	A		12/2000	LIndgren	
6,167,379	A		12/2000	Dean et al.	
6,178,331	B1	*	1/2001	Holmes et al.	455/466
6,185,551	B1	*	2/2001	Birrell et al.	
6,185,603	B1	*	2/2001	Henderson et al.	709/206
6,202,085	B1	*	3/2001	Benson et al.	
6,203,192	B1	*	3/2001	Fortman	

6,205,448	B1 *	3/2001	Kruglikov et al.	
6,208,996	B1 *	3/2001	Ben-Shachar et al.	
6,219,694	B1 *	4/2001	Lazaridis et al.	
6,233,341	B1 *	5/2001	Riggins	
6,240,088	B1	5/2001	Gayton et al.	
6,249,820	B1	6/2001	Dobbins et al.	
6,256,666	B1	7/2001	Singhal	
6,272,545	B1	8/2001	Flanagin et al.	
6,275,848	B1	8/2001	Arnold	
6,275,850	B1	8/2001	Beyda et al.	
6,311,282	B1 *	10/2001	Nelson et al.	713/324
6,313,734	B1 *	11/2001	Weiss et al.	
6,314,108	B1 *	11/2001	Ramasubramani et al.	
6,330,244	B1 *	12/2001	Swartz et al.	
6,333,973	B1 *	12/2001	Smith et al.	
6,351,764	B1 *	2/2002	Voticky et al.	709/206
6,356,956	B1 *	3/2002	Deo et al.	
6,360,272	B1 *	3/2002	Lincke et al.	
6,370,566	B2 *	4/2002	Discolo et al.	
6,389,455	B1 *	5/2002	Fuisz	
6,400,810	B1 *	6/2002	Skladman et al.	379/93.24
6,401,113	B2 *	6/2002	Lazaridis et al.	
6,449,287	B1 *	9/2002	Leuca et al.	
6,505,214	B1 *	1/2003	Sherman et al.	
6,580,787	B1 *	6/2003	Akhteruzzaman et al.	
6,611,358	B1 *	8/2003	Narayanaswamy	
6,701,378	B1 *	3/2004	Gilhuly et al.	
2001/0001552	A1	5/2001	Vong	
2001/0015977	A1 *	8/2001	Joansson	
2001/0029531	A1	10/2001	Ohta	
2001/0040693	A1	11/2001	Saito et al.	
2001/0042093	A1	11/2001	Shirai et al.	
2001/0045885	A1 *	11/2001	Tett	
2001/0054072	A1	12/2001	Discolo et al.	
2002/0010748	A1 *	1/2002	Kobayashi et al.	
2002/0059380	A1 *	5/2002	Biliris et al.	
2003/0097361	A1 *	5/2003	Huang et al.	

FOREIGN PATENT DOCUMENTS

EP	0617373	9/1994
EP	0 736 989 A2	9/1996
EP	0736989	10/1996
EP	0772327	5/1997
EP	0777394	6/1997
EP	0788287	8/1997
EP	09214556	8/1997
EP	0793387	9/1997
EP	0 825 788 A2	2/1998
EP	0825788	2/1998
EP	0838774	4/1998
EP	0838934	4/1998
EP	0772327	2/1999
EP	0 918 417 A2	5/1999
EP	0 930 766 A2	7/1999
EP	0930766	7/1999
EP	0 986 225 A1	3/2000
JP	09214556	8/1997
JP	9305155	11/1997
JP	11289346 A	10/1999
WO	9619064	6/1996
WO	WO 96/19064	6/1996
WO	9726709	7/1997
WO	9727717	7/1997
WO	WO 97/27717	7/1997
WO	WO 97/28518	8/1997
WO	WO 97/32251	9/1997
WO	9732251	9/1997
WO	9733421	9/1997
WO	9741654	11/1997
WO	9744942	11/1997
WO	9800787	1/1998
WO	WO 98/07897	2/1998
WO	9821911	5/1998
WO	9823108	5/1998
WO	WO 98/23108	5/1998
WO	WO 98/26344	6/1998
WO	9848560	10/1998
WO	98/48560	10/1998
WO	WO 98/48560	10/1998
WO	WO 99/05620	2/1999
WO	WO 99/05813	2/1999
WO	WO 99/06900	2/1999
WO	WO 99/50974	2/1999
WO	WO 99/45684	3/1999
WO	9917505	4/1999
WO	WO 99/17505	4/1999
WO	WO 99/19988	4/1999
WO	9919988	4/1999
WO	WO 99/36870	7/1999
WO	WO 99/45484	9/1999
WO	9945484	9/1999
WO	WO 99/48312	9/1999
WO	9948312	9/1999
WO	9950974	10/1999
WO	9963709	12/1999
WO	WO 99/63709	12/1999
WO	WO 00/11567	3/2000
WO	WO 00/11832	3/2000
WO	WO 00/20994	4/2000
WO	WO 00/31931	6/2000
WO	WO 00/49819	8/2000
WO	WO 01/01264	1/2001
WO	WO 01/13572 A1	2/2001
WO	WO 01/71539 A2	3/2001

OTHER PUBLICATIONS

"Have Your Pager Call My Pager", Sullivan, Kristina B., PC Week, Dec. 8, 1997.

Feibus, "A Desktop In Your Palm", Informationweek, Aug. 25, 1997, pp. 65ff.

Behr, "Handheld Solutions", Informationweek, Oct. 27, 1997, pp. 106–113.

Briere, Daniel, et al., "One Mailbox, Just Like Old Times," Network World, vol. 14, issue 16, p.21 (Apr. 21, 1997).

Padwick, et al., Special Edition Using Microsoft Outlook 97, 1997, Que Corporation, pp. 250–251, 353–367.

News Release, "Motorola Rings in 1995 with the Launch of the Marco® Wireless Communicator," Jan. 4, 1995 (4 pgs.).

Timeline, "FLEX™ Technology Timeline," (3 pgs.).

General Magic, Inc., Corporate Backgrounder, 2001 (2 pgs.).

Pegasus Email Settings, ABSnet Internet Services, Inc. (4 pgs.).

Motorola, Inc., emailVClient, 2001 (4 pages).

News Release, "Motorola Announces Pagewriter 250, The World's Smallest Pager with Full Keyboard", Feb. 27, 1997 (2 pgs.).

Dewey, Barney, "Communications Strategies for Newton 2.0," Newton Technology Journal, p. 10, Jun. 1996.

Press Release, "Motorola Announces New Solutions to Provide Consumers with Wrieless Access to Personal and Enterprise E-mail Accounts," Mar. 21, 2001 (4 pgs.).

"Motorola's 'Marco' Wireless Communicator," http://www.msu.edu/~luckie/gallery/marco.htm, Jun. 14, 2001 (3 pgs.).

News Release, "CE Software Announces MobileVision," Editorial Contacts, CE Software, Inc., 1995 (3 pgs.).

News Release, "CE Software Ships MobileVision," Jun. 20, 1995 (3 pgs.).
Newton Reference, Communications, 1996–1997(4 pgs.).
PC Pro Issue 31: Realword Computing, PDA Column, Jul. 30, 1997 (7 pgs.).
Enterprise Solutions for Email Overload, Founder Publications, http://www.amikanow.com/corporte/publications.htm, Aug. 6, 2001 (9 pgs.).
"Motorola's 'Marco' Wireless Communicator," http://www.msu.edu./~luckie/gallery/marco.htm, Aug. 6, 2001 (2 pgs.).
Press Release, "Apple Agrees to License Newton Technology to Schlumberger, Digital Ocean," Nov. 3, 1995 (3 pgs.).
Frezaz, Bill, "PDA, PDA, Wherefore Art Thou, PDA?", Freewire, Aug. 6, 2001 (6 pgs.).
Black, Lauren, et al., "Personal Digital Assistants," Macworld Reviews, Aug. 6, 2001 (5 pgs.).
Reference, "MobileVision Direct Wireless Connection to Your LAN-Based Electronic Mailbox," CE Software, Inc., pp. 1, 3, 5, 7, 9, 11, 13, 15, 17, 19, 21, 1995.
User Manual, "MobileVision Direct Wireless Connection to Your LAN-Based Electronic Mailbox," CE Software, Inc. 1995.
Johnson, David B., "Ubiquitous Mobile Host Internetworking," Fourth Workshop on Workstation Operating Systems, pp. 85–90, Oct. 14–15, 1993.
Johnson, David B., "Mobile Host Internetworking Using IP Loose Source Routing," School of Computer Science, Carnegie Mellon University, pp. 1–14 Feb. 1993.
Schoettle, Bob, "IP–Address Management on LANs," Byte, pp. 199–200, Feb. 1996.
Cheshire, Stuart, et al, "Internet Mobility 4×4," Computer Science Department, Stanford University, pp. 1–12, Aug. 1996.
Yeom, Hoen Y., et al., "IP Mutliplexing by Transparent Port–Address Translator," Proceedings of the Tenth USENIX System Administration Conference, pp. 113–122, Sep. 29–Oct. 4, 1996.
Johnson, David B., "Scalable and Robust Internetwork Routing for Mobile Hosts," IEEE Computer Society, pp. 2–11, 1994.
Perkins, Charles, "IMHP: A Mobile Host Protocol for the Internet," Computer Networks and ISDN System, vol. 27, pp. 479–491, 1994.
Proceedings of the IEEE 7th International Workshop on Network and Operating System Support for Digital Audio and Video, Innsbrook Estates Conference Center, May 19–21, 1997, pp. 135–146.
Lucent Technologies, Bell Labs Technical Journal, vol. 2, No. 3, pp. 152–163, Summer 1997.
Lavana, Hemang, et al., Internet–Based Workflows: A Paradigm for Dynamically Reconfigurable Desktop Environments, Group 97, pp. 204–213, 1997.
Perkins, Charles E., et al., "Mobility Support in IPv6," Mobicom 96, pp. 27–37, 1996.
Goldszmidt, German, et al., "ShockAbsorber: A TCP Connection Router," IEEE, Vol. 3, pp. 1919–1923, 1997.
Egevang, K. et al., "The IP Network Address Translator," Network Working Group, pp. 1–10, May 1994.
Manual, "Server and BBS Software for the Packet Radio" by Jean Paul Roubelat, pp. 1–173.
Book, "Internetwork Mobility The CDPD Approach," by Mark S. Taylor, William Waung, and Mohsen Banan, Jun. 11, 1996.
"BlackBerry Technical White Paper," Research In Motion Ltd., Version 1.0, 1998–1999.
Newsletter, "Battery Friendly Bulletin," vol. 1, Issue 3, pp. 1–7 and unnumbered page, 1999.
Article, Comerford, "Handhelds Duke It Out for the Internet," Wireless Internet, pp. 35–38 and 41, Aug. 2000.
Press Detail, "Extended Systems and Motorola Bring Short–Range Wireless to the Paging E–volution," Jan. 13, 2000 (3 pgs.).
Press Detail, "3Com Corporation Licenses Bluetooth Technology from Extended Systems," Feb. 22, 2000 (2 pgs.).
Web Site Article, Hawaleshka, "The Web in Your Pocket," Maclean's, May 15, 2000 (3 pgs.).
Claxton, "Messaging API's for Voice Networks," Telecommunications, pp. 116–120, 1998.
Gifford, David K., et al., "The Application of Digital Broadcast Communication to Large Scale Information Systems," IEEE Journal on Selected Areas in Communications, vol. SAC–3, No. 3, pp. 457–467 (May 1985).
Gifford, David K., et al., "An Architecture for Large Scale Information Systems," ACM, pp. 161–170 (1985).
Sun Microsystems, JavaMail API Design Specification, Version 1.0, Dec. 9, 1997, Sun Microsystems, Inc., chapters 1–10 appendices A–E.
IBM Portable Terminal User's Guide, Third Edition (Jun. 1985).
Binder, Richard et al, The Alohanet Menehune, University of Hawaii, version II (Sep. 1974).
Computer Structures–Principles and Examples, McGraw Hill (1982).
Krebs, Jay, Portable Computer and Host Talk Over Radio–Frequency Link, Electronics, pp. 142–145 (Aug. 25, 1983).
"BlackBerry Technical White Paper," Research In Motion Ltd., Version 1.0, 1989–1999.
Newsletter, "Battery Friendly Bulletin," vol. 1, Issue 3, pp. 1–7 and unnumbered page, 1999.
Article, Comford, "Handhelds Duke It Out for the Internet," Wireless Internet, pp. 35–38 and 41, Aug. 2000.
Press Detail, "Extended Systems and Motorola Bring Short–Range Wireless to the Paging E–volution," Jan. 13, 2000 (3 pgs.).
Press Detail, "3Com Corporation Licenses Bluetooth Technology from Extended Systems," Feb. 22, 2000 (2 pgs.).
Web site Article, Hawaleshka, "The Web in Your Pocket," Maclean's, May 15, 2000 (3 pgs.).
Compaq, Aero 2100 Series Color Palm–size PC Reference Guide, Second Edition, Aug. 1999, Compaq Corporation.
Claxton, "Messaging API's for Voice Networks," Telecommunications, pp. 116–120, 1998.
Gillford, David K., et al., "The Application of Digital Broadcast Communication to Large Scale Information Systems," IEEE Journal on Selected Areas in Communciations, vol. SAC–3, No. 3, pp. 457–467 (May 1985).
Gifford, David K., et al., "An Architecture for Large Scale Information Systems," ACM, pp. 161–170 (1985).
Evevang, K. Et al., "The IP Network Address Translator," Network Working Group, pp. 1–10, May 1994.
Manual, "Server and BBS Software for the Packet Radio" by Jean Paul Roubelat, pp. 1–173.
Book, "Internetwork Mobility The CDPD Approach," by Mark S. Taylor, William Waung, and Mohsen Banan, Jun. 11, 1996.
NewsRelease, "Motorola Rings in 1995 with the Launch of the Macro Wireless communicator," Jan. 4, 1995 (4 pgs.).

Timeline, "FLEX Technology Timeline," (3 pgs.).
News Release, "Motorola Announces Pagewriter 250, The World's Smallest Pager with Full Keyboard", Feb. 27, 1997 (2 pgs.).
Dewey, Barney, "Communications Strategies for Newton 2.0," Newton Technology Journal, p. 10, Jun. 1996.
Press Release, "Motorola Announces New Solutions to Provide Consumers with Wireless Access to Personal and Enterprise E-mail Accounts," Mar. 21, 2001 (4 pgs.).
"Motorola's 'Macro' Wireless Communicator," http:/www.msu.edu/~luckie/gallery/macrom.htm, Jun. 14, 2001 (3 pgs.).
News Release, "CE Software Announces Mobile Vision," Editorial Contacts, CE Software, Inc., 1995 (3 pgs.).
News Release, "CE Software Ships Mobile Vision," Jun. 20, 1995 (3 pgs.).
Newton Reference, Communications, 1996–1997 (4 pgs.).
PC Pro Issue 31: Realworld Computing, PDA Column, Jul. 30, 1997 (7 pgs.).
Enterprise Solutions for Email Overload, Founder Publications, Aug. 6, 2001 (9 pgs.).
"Motorola's 'Macro' Wireless Communicator," http://www.msu.edu/~luckie/gallery/macro.htm, Aug. 6, 2001 (2 pgs.).
Press Release, "Apple Agrees to License Newton Technology to Schlumberger, Digial Ocean," Nov. 3, 1995 (3 pgs.).
Frezza, Bill, "PDA, PDA, Where Art Thou, PDA?", Freewire, Aug. 6, 2001 (5 pgs.).
Black, Lauren, et al., "Personal Digital Assistants," Macworld Reviews, Aug. 6, 2001 (5 pgs.).
Reference, "MobileVision Direct Wireless Connection to Your LAN-Based Electronic Mailbox," CE Software, Inc., pp. 1, 3, 5, 7, 9, 11, 13, 15, 17, 19, 21, 1995.
User Manual, "MobileVision Direct Wireless Connection to Your LAN-Based Electronic Mailbox," CE Software, Inc. 1995.
Johnson, David B., Obiquious Mobile Host Internetworking, Fourth Workshop on workstation Operating Systems, pp. 85–90, Oct. 14–15, 1993.
Johnson, David B., "Mobile Host Internetworking Using IP Loose Source Routing," School of Computer Science, Carnegie Mellon University, pp. 1–14, Feb. 1993.
Schoettle, Bob, "IP-Address Management on LANs," Byte, pp. 199–200, Feb. 1996.
Cheshire, Stuart, et al., "Internet Mobility 4x4," Computer Science Department, Stanford University, pp. 1–12, Aug. 1996.
Yeom, Hoen Y., et al., "IP Multiplexing by Transparent Port-Address Translator," Proceedings of the Tenth USENIX System Administration Conference, pp. 113–122, Sep. 29–Oct. 4, 1996.
Johnson, David B., "Scalable and Robust Internetwork Routing for Mobile Hosts," IEEE Computer Society, pp. 2–11, 1994.
Perkins, Charles, "IMHP: A Mobile Host Protocol for the Internet," Computer Networks and ISDN System, vol. 27, pp. 479–491, 1994.
Perkins, Charles E., et al., "Mobility Support in IPv6," Mobicom 96, pp. 27–37, 1996.
Goldszmidt, German, et al., "ShockAbsorber: A TCP Connection Router," IEEE, vol. 3, pp. 1919–1923, 1997.
Feibus, "A Desktop In Your Palm", Informationweek, Aug. 25, 1997, pp. 65ff.
Behr, "Handheld Solutions", Informationweek, Oct. 27, 1997, pp. 106–113.
DTS Wireless Website located at D.R.L. http://www.dtswireless.com.
"3Com PalmPilot Gets Wireless Link for E-Mail", Spooner, Jogn G., PC Week, Dec. 8, 1997.
"Have Your Pager Call My Pager", Sullivan, Kristina B., PC Week, Dec. 8, 1997.
Gadol, Steve, et al., "Nomadic Tenets-A User's Perspective," Sun Microsystems Laboratories, Inc., pp. 1–16 (Jun. 1994).
Declaration of David A. Keeney regarding SAM System, pp. 1–33 (Sep. 3, 2002).
"SAM integrates E-mail, Alpha Paging, Fax, and More!", SAM System for Automated Messages (10 pgs.).
SAMpage Manual, version 2.0, TeckNow! (Feb. 1990).
Reiter, Alan A., "Focus on Technology," Telocator (Jan. 1990) (4 pgs.).
Kuehn, Carl, "More than Email," Southwest Computer & Business Equipment Review, vol. VII, No. 2, (Feb. 1990) (1 pg.).
SAM System for Automated Messages User's Manual (1988) (17 pgs.).
Motorola Operating Instructions for Your "PMR 2000" Series Display Radio Pages Personal Message Center (2000) (7 pgs.).
Motorola PMR 2000 Personal Message Receiver POSAG (CCIR Radio Paging Code #1) (1986) (6 pgs.).
SAM Reference Manual, System for Automated Messages (Sep. 1989).
Briere, Daniel et al., "One Mailbox, Just Like Old Times", Network World, vol. 14, issue 16, p. 21 (Apr. 21, 1997).
Mosher, Microsoft Exchange User's Handbook, Duke Press, 1997, pp. 547–549.
Kramer, Matt, "Wireless E-mail services gain Windows clients", PC Week, Apr. 17, 1995, v12, n15.
Arnum, Eric, "the universal mailbox arrives . . . soft of", Business Communications Review, May 1996, v26, n5.
Moody's Investors Sevice, Socket Communications Inc.-History & Debt, Investex Report No. 3240276, Feb. 1998.
Newsletter, E-Mail Merges with Voice Through Infinite Technologies, Voice Technology & Services News, May 26, 1998.
Newsletter, VoDAPAGE: Vodapage demos increasing convergence of pagers and mobile communications at TMA 29, M2 Presswire, Nov. 28, 1996.
Takahashi et al., "Communication Method with Data Compression and Encryption for Mobile Computing Environment," Inet 96 Proceedings, 1996, from www.isoc.org/inet96/preceedings/a6/a6_2htm, pp. 1–8.
United States District Court, Northern District of California, San Francisco Division: Good Technology, Inc. V. Research in Motion, Ltd., et al., Case No. C02-2348 MJJ, Plantiff Good Technology, Inc.'s Preliminary Invalidity Contentions Pursuant to Patent L.R. 3-3 and Response Under Patent L.R. 3-4, Jan. 16, 2004, 33 pages.
Perkins, C. : "RFC 2002-IP Mobility Support," IBM, Oct. 1996, 61 pages.

Dawson, F., et al.: "Calender Message–Based Interoperability Protocol (imIP)," Standards Track, RFC 2447, iMIP, Nov. 1998, 4 pages, XP-002249002.
Nelson, M.: "Wireless Data Sevices: Here and Now," PDA Developers 2.6, Nov./Dec. 1994, 3 pages.
14th International Conference on Distributed Computing Systems, Poznan Poland, Jun. 21–24, 1994.

* cited by examiner

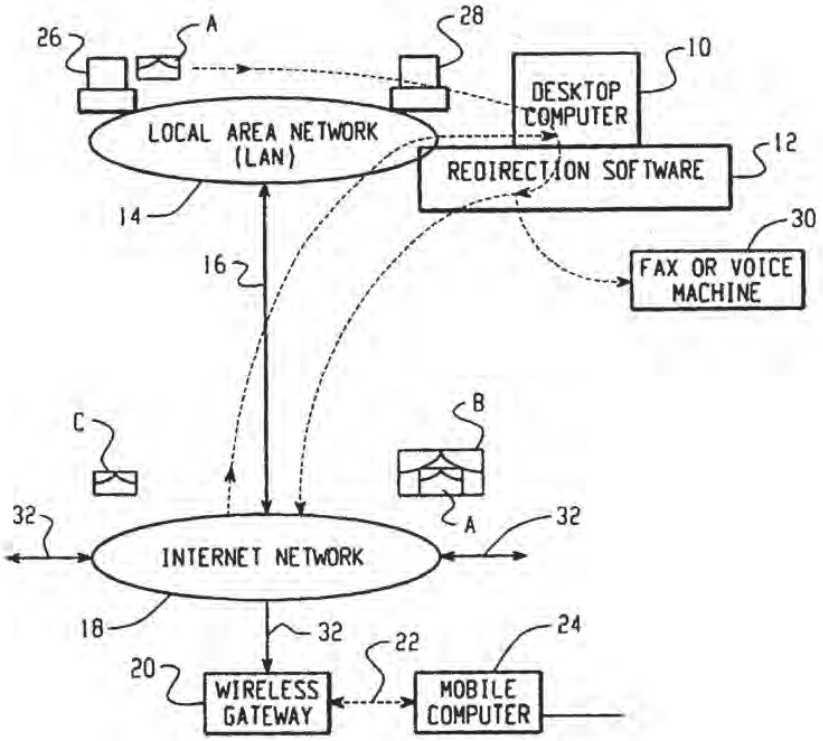
26
A
28
10
DESKTOP COMPUTER
LOCAL AREA NETWORK (LAN)
12
REDIRECTION SOFTWARE
14
30
16
FAX OR VOICE MACHINE
C
B
32
A
32
INTERNET NETWORK
18
32
22
24
20
WIRELESS GATEWAY
MOBILE COMPUTER

Fig. 1

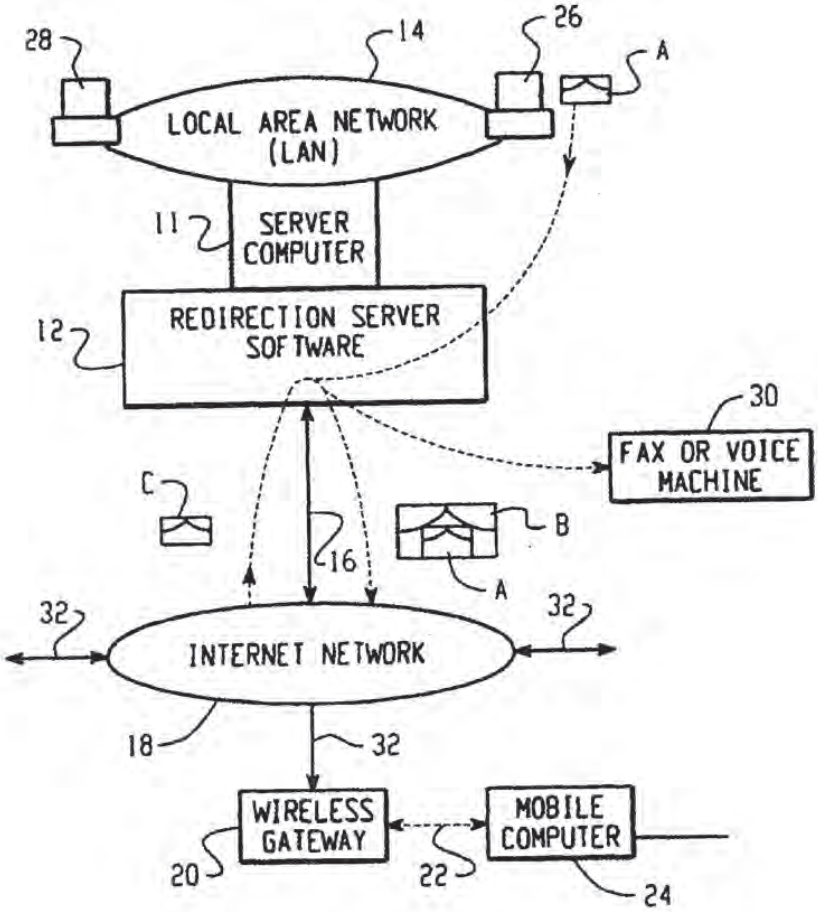
28
14
26
A
LOCAL AREA NETWORK (LAN)
11
SERVER COMPUTER
12
REDIRECTION SERVER SOFTWARE
30
FAX OR VOICE MACHINE
C
B
16
A
32
32
INTERNET NETWORK
18
32
WIRELESS GATEWAY
MOBILE COMPUTER
20
22
24

Fig. 2

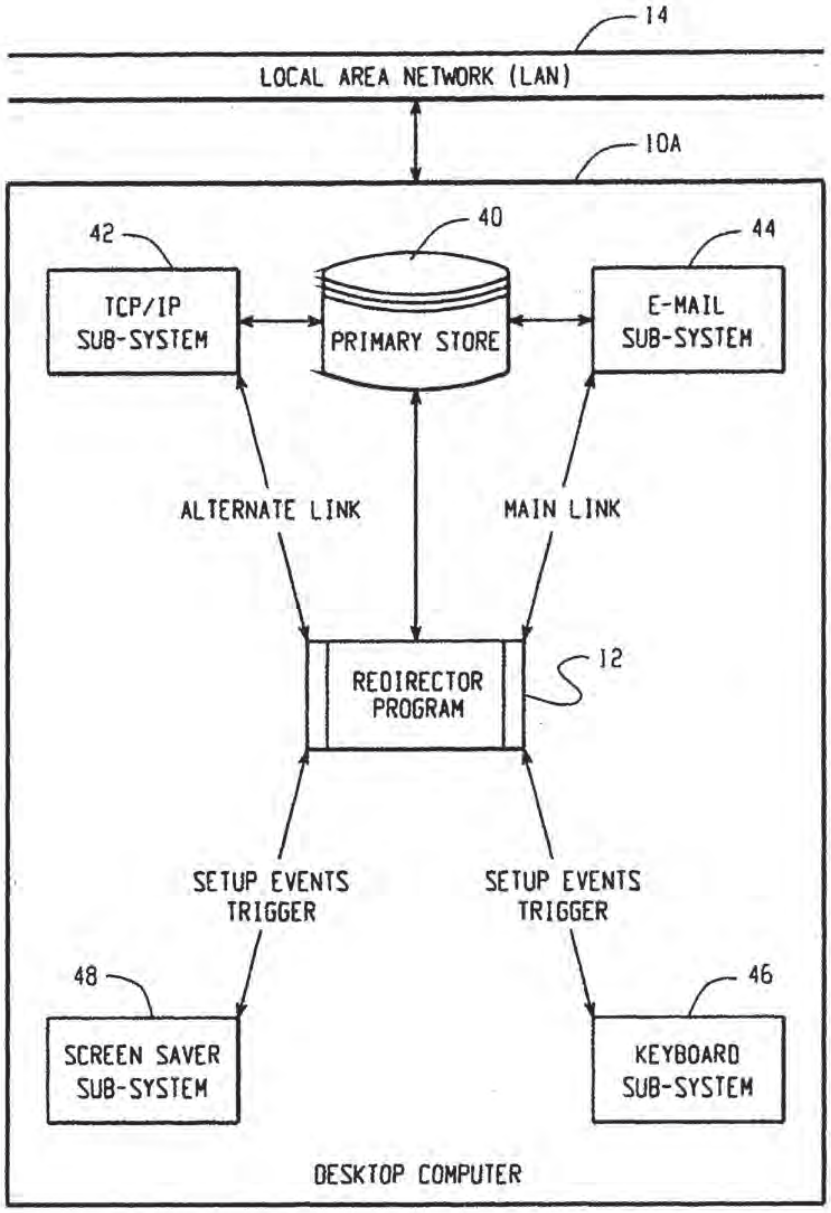
14
LOCAL AREA NETWORK (LAN)
10A
42
40
44
TCP/IP SUB-SYSTEM
PRIMARY STORE
E-MAIL SUB-SYSTEM
ALTERNATE LINK
MAIN LINK
REDIRECTOR PROGRAM
12
SETUP EVENTS TRIGGER
SETUP EVENTS TRIGGER
48
46
SCREEN SAVER SUB-SYSTEM
KEYBOARD SUB-SYSTEM
DESKTOP COMPUTER

Fig. 3

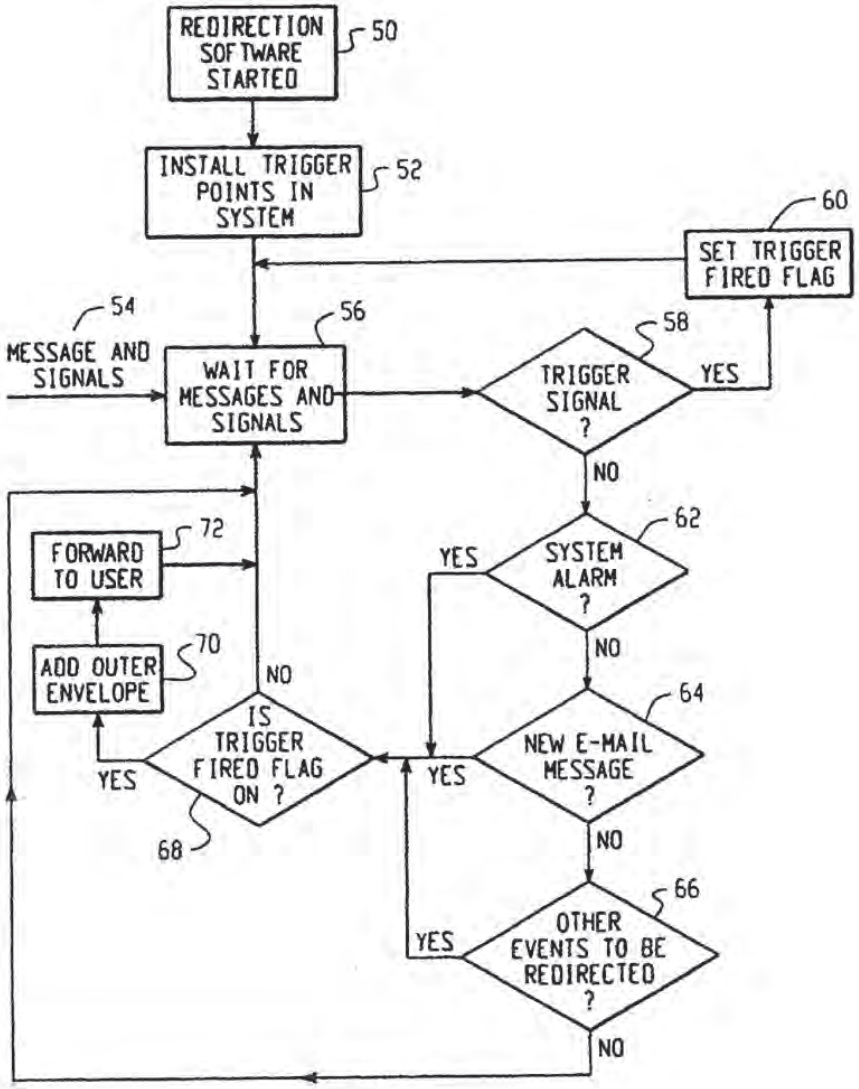
REDIRECTION SOFTWARE STARTED
50
INSTALL TRIGGER POINTS IN SYSTEM
52
60
SET TRIGGER FIRED FLAG
54
MESSAGE AND SIGNALS
56
WAIT FOR MESSAGES AND SIGNALS
58
TRIGGER SIGNAL ?
YES
NO
62
SYSTEM ALARM ?
YES
NO
72
FORWARD TO USER
70
ADD OUTER ENVELOPE
NO
IS TRIGGER FIRED FLAG ON ?
YES
68
64
NEW E-MAIL MESSAGE ?
YES
NO
66
OTHER EVENTS TO BE REDIRECTED ?
YES
NO

Fig. 4

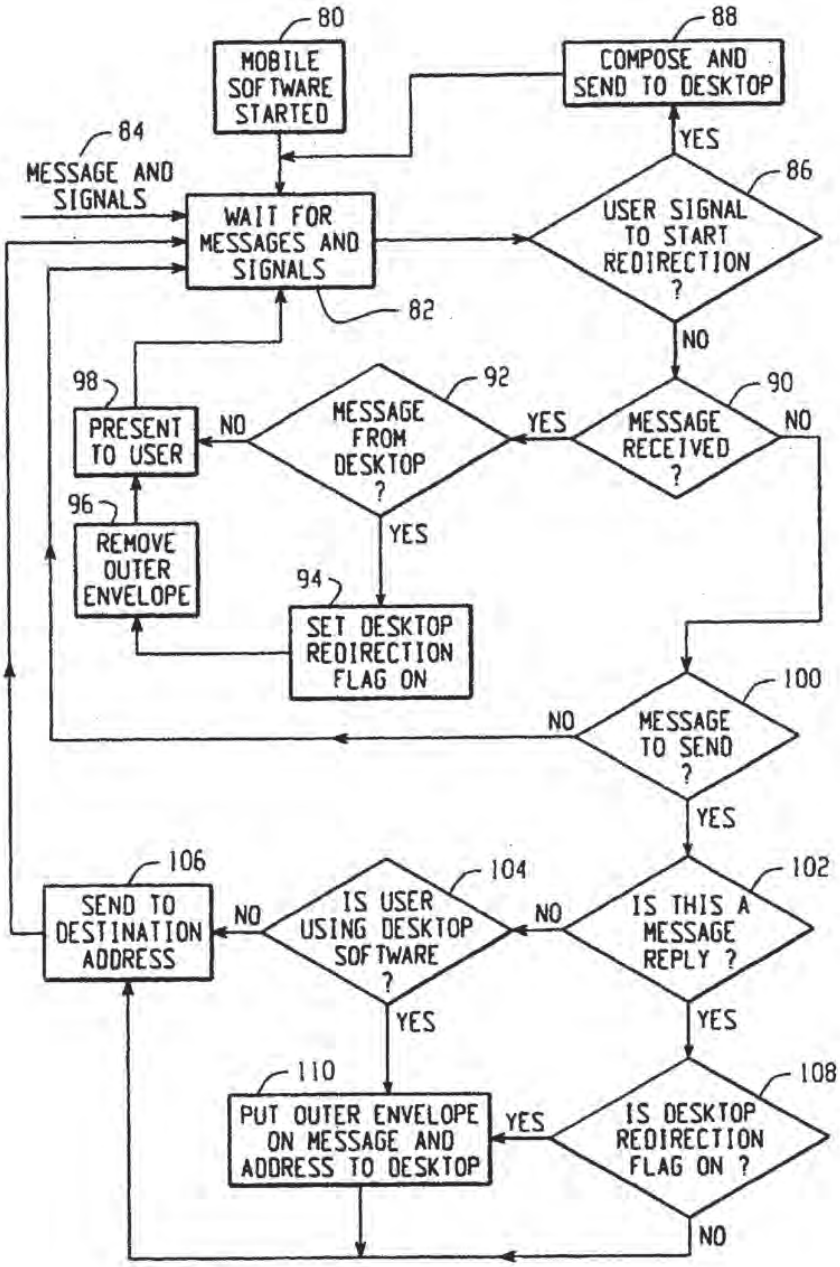
80
MOBILE SOFTWARE STARTED
88
COMPOSE AND SEND TO DESKTOP
84
MESSAGE AND SIGNALS
WAIT FOR MESSAGES AND SIGNALS
82
YES
86
USER SIGNAL TO START REDIRECTION ?
NO
98
PRESENT TO USER
NO
92
MESSAGE FROM DESKTOP ?
YES
90
MESSAGE RECEIVED ?
NO
96
REMOVE OUTER ENVELOPE
YES
94
SET DESKTOP REDIRECTION FLAG ON
100
NO
MESSAGE TO SEND ?
YES
106
SEND TO DESTINATION ADDRESS
NO
104
IS USER USING DESKTOP SOFTWARE ?
NO
102
IS THIS A MESSAGE REPLY ?
YES
YES
110
PUT OUTER ENVELOPE ON MESSAGE AND ADDRESS TO DESKTOP
YES
108
IS DESKTOP REDIRECTION FLAG ON ?
NO

Fig. 5

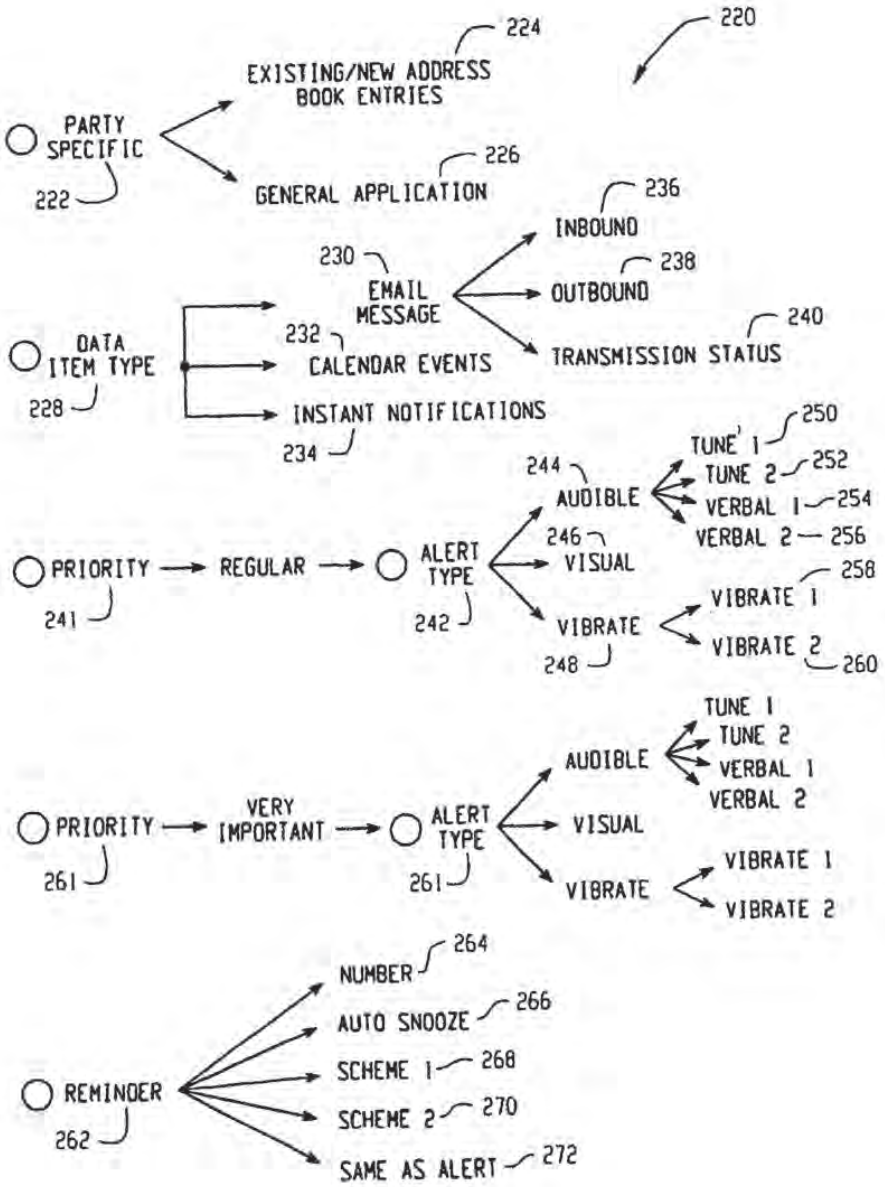
220
224
EXISTING/NEW ADDRESS BOOK ENTRIES
PARTY SPECIFIC
222
226
GENERAL APPLICATION
236
INBOUND
230
EMAIL MESSAGE
238
OUTBOUND
240
TRANSMISSION STATUS
DATA ITEM TYPE
228
232
CALENDAR EVENTS
INSTANT NOTIFICATIONS
234
250
TUNE 1
244
AUDIBLE
TUNE 2
252
VERBAL 1
254
VERBAL 2
256
PRIORITY
241
REGULAR
ALERT TYPE
242
246
VISUAL
258
VIBRATE 1
VIBRATE
248
VIBRATE 2
260
TUNE 1
TUNE 2
AUDIBLE
VERBAL 1
VERBAL 2
PRIORITY
261
VERY IMPORTANT
ALERT TYPE
261
VISUAL
VIBRATE 1
VIBRATE
VIBRATE 2
264
NUMBER
266
AUTO SNOOZE
268
SCHEME 1
REMINDER
262
270
SCHEME 2
272
SAME AS ALERT

Fig. 6

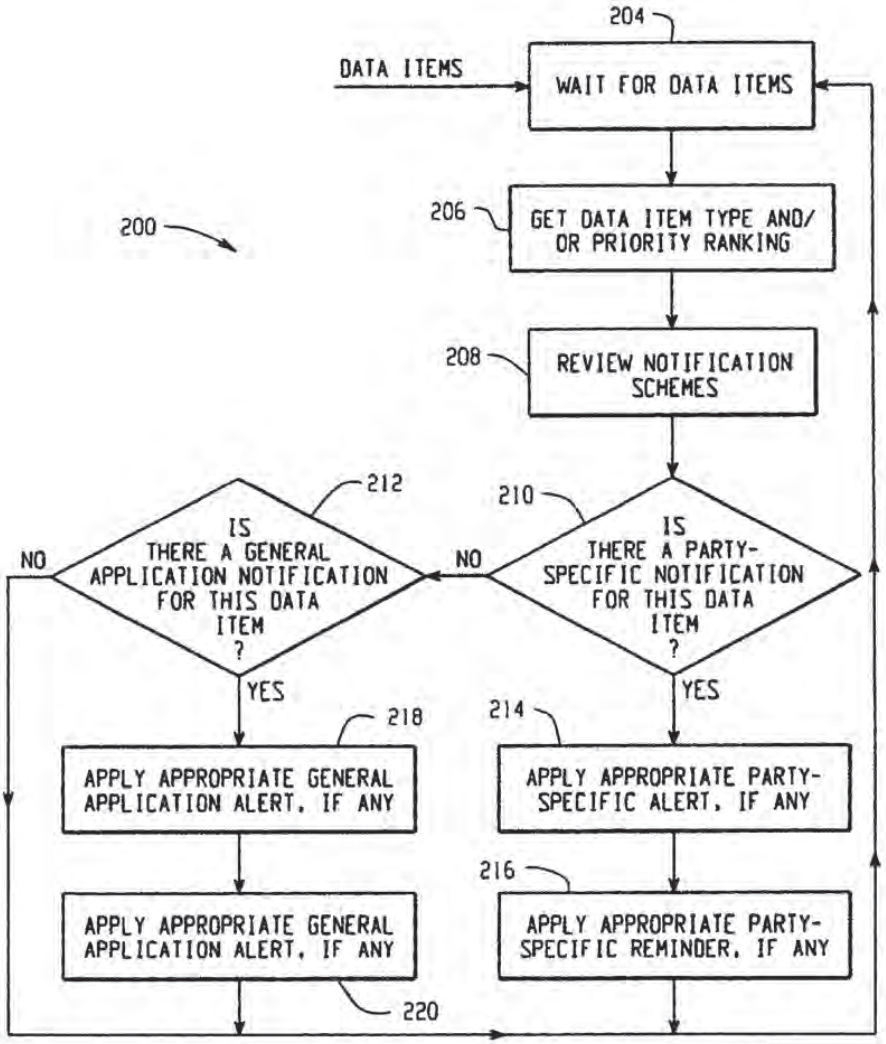
204
DATA ITEMS
WAIT FOR DATA ITEMS
200
206
GET DATA ITEM TYPE AND/ OR PRIORITY RANKING
208
REVIEW NOTIFICATION SCHEMES
212
210
IS THERE A GENERAL APPLICATION NOTIFICATION FOR THIS DATA ITEM ?
IS THERE A PARTY-SPECIFIC NOTIFICATION FOR THIS DATA ITEM ?
NO
NO
YES
YES
218
214
APPLY APPROPRIATE GENERAL APPLICATION ALERT, IF ANY
APPLY APPROPRIATE PARTY-SPECIFIC ALERT, IF ANY
216
APPLY APPROPRIATE GENERAL APPLICATION ALERT, IF ANY
APPLY APPROPRIATE PARTY-SPECIFIC REMINDER, IF ANY
220

Fig. 7

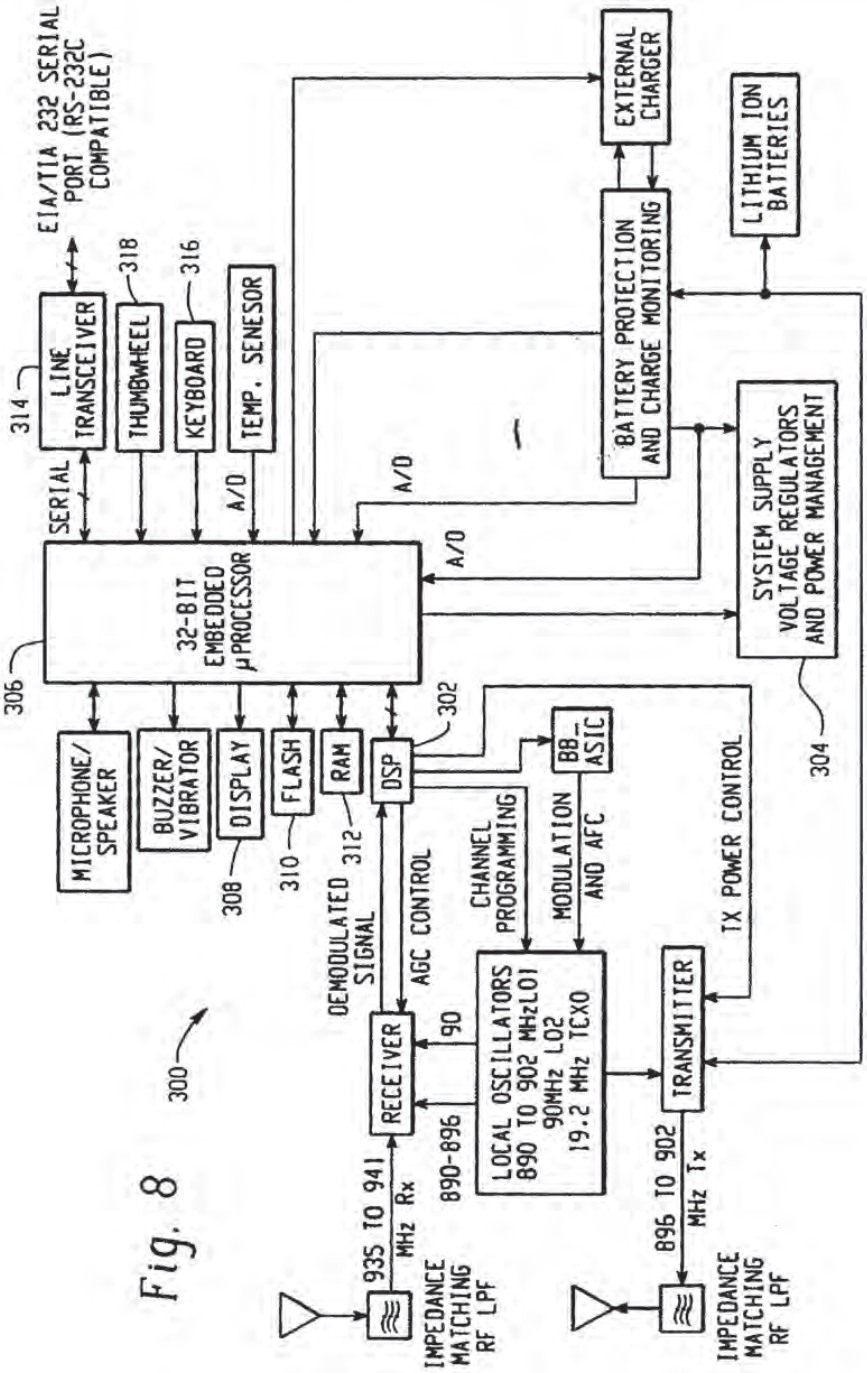
EIA/TIA 232 SERIAL PORT (RS-232C COMPATIBLE)
314
LINE TRANSCEIVER
318
THUMBWHEEL
316
KEYBOARD
TEMP. SENESOR
SERIAL
A/D
A/D
A/D
EXTERNAL CHARGER
LITHIUM ION BATTERIES
BATTERY PROTECTION AND CHARGE MONITORING
SYSTEM SUPPLY VOLTAGE REGULATORS AND POWER MANAGEMENT
304
306
32-BIT EMBEDDED μPROCESSOR
MICROPHONE/ SPEAKER
BUZZER/ VIBRATOR
DISPLAY
308
FLASH
310
RAM
312
DSP
302
BB_ ASIC
CHANNEL PROGRAMMING
MODULATION AND AFC
TX POWER CONTROL
DEMODULATED SIGNAL
AGC CONTROL
RECEIVER
90
890-896
LOCAL OSCILLATORS 890 TO 902 MHzLO1 90MHz LO2 19.2 MHz TCXO
TRANSMITTER
300
935 TO 941 MHz Rx
896 TO 902 MHz Tx
IMPEDANCE MATCHING RF LPF
IMPEDANCE MATCHING RF LPF

Fig. 8

NOTIFICATION SYSTEM AND METHOD FOR A MOBILE DATA COMMUNICATION DEVICE

CROSS REFERENCE TO RELATED APPLICATION

This application is a continuation-in-part of U.S. utility application Ser. No. 09/087,623, entitled System and Method for Pushing Information from a Host System to a Mobile Data Communication Device, filed May 29, 1998, and assigned to the assignee of the present invention, now U.S. Pat. No. 6,219,694.

BACKGROUND OF THE INVENTION

The present invention is directed toward the field of notifications for a mobile communications device.

The mobile data communication device is preferably coupled to the host system via a wireless network and one or more landline networks. Due to the bandwidth limitations of wireless networks, only a portion of a user-selected data item is generally redirected to the user's mobile device, with the user given the option of then retrieving the entire data item (or some other portion of the data item) from the host system.

Instead of warehousing (or storing) the user's data items at the host system and then "synchronizing" the mobile data communication device to data items stored at the host system when the mobile device requests that such items of information be communicated to it, the present invention employs a "push" paradigm that continuously packages and retransmits the user-selected items of information to the mobile data communication device in response to a triggering event detected at the host system. Wireless mobile data communications devices, especially those that can return a confirmation signal to the host that the pushed data has been received are especially well suited for this type of push paradigm.

Present systems and methods for replicating information from a host system to a user's mobile data communication device are typically "synchronization" systems in which the user's data items are warehoused (or stored) at the host system for an indefinite period of time and then transmitted in bulk only in response to a user request. In these types of systems and methods, when replication of the warehoused data items to the mobile device is desired, the user typically places the mobile device in an interface cradle that is electrically connected to the host system via some form of local, dedicated communication, such as a serial cable or an infrared or other type of wireless link. Software executing on the mobile data communication device then transmits commands via the local communications link to the host system to cause the host to begin transmitting the user's data items for storage in a memory bank of the mobile device. In these synchronization schemes, the mobile unit "pulls" the warehoused information from the host system in a batch each time the user desires to replicate information between the two devices. Therefore, the two systems (host and mobile) only maintain the same data items after a user-initiated command sequence that causes the mobile device to download the data items from the host system. A general problem with these synchronization systems is that the only time that the user data items are replicated between the host system and the mobile data communication device is when the user commands the mobile device to download or pull the user data from the host system. Five minutes later a new message could be sent to the user, but the user would not receive that

message until the next time the user fetches the user data items. Thus, a user may fail to respond to an emergency update or message because the user only periodically synchronizes the system, such as once per day. Other problems with these systems include: (1) the amount of data to be reconciled between the host and the mobile device can become large if the user does not "synchronize" on a daily or hourly basis, leading to bandwidth difficulties, particularly when the mobile device is communicating via a wireless packet-switched network; and (2) reconciling large amounts of data, as can accrue in these batch-mode synchronization systems, can require a great deal of communication between the host and the mobile device, thus leading to a more complex, costly and energy-inefficient system. A more automated, continuous, efficient and reliable system of ensuring that user data items are replicated at the user's mobile device is therefore needed.

The user's mobile device is in many instances removably stored in a holster that is detachably connected to the user's belt or other piece of clothing. Traditionally, upon the detection of a new data item, an audible signal and/or the vibration of the device is the form of notification provided to the user. Such traditional notification is problematic at best and do not provide the user any flexibility for rapid decision-making. A heavy user of the system and method for pushing information from a host to a mobile communication device disclosed herein is quickly overcome with persistent data item notification during the busiest time periods in a business day. After receiving a traditional notification, the user reaches for his mobile device in the holster to examine the displayed data item associated with the notification. Frequent traditional notifications can become annoying to a heavy user; thereby causing the user to switch off the audible and/or vibrate notifications all together.

Traditional mobile communication devices, which implement the system and method of pushing information from a host as described herein, also lack the facility of an assistant or secretary to screen pages, emails, voice mails, etc. that arrive at the mobile communication device. In many ways, more work is created for the user when using such a device because a form of wireless umbilical cord extends from the user's host system to the user via the mobile communication device without the facility of a secretary or assistant to manage and/or screen the notifications. The user cannot differentiate unimportant data item notifications from those data items that are relevant or very important without having to commit to the physical action of reviewing the display of the device. An additional feature of the present invention is that the push paradigm, in combination with a return communications pathway, lends itself well to a system that permits a user to control remotely, through the user's mobile device, a number of aspects of the host system.

There remains a general need in this art for a system and method of continuously pushing user-selected data items (or certain portions of the selected data items) stored at a host system to a user's mobile data communication device.

There remains a more particular need for such a system and method where user-selected data items are continuously "pushed" from the host system to the mobile data communication device upon the occurrence of one or more user-defined triggering events.

There remains an additional need for such a system and method that provides flexibility in the types and quantities of user data items that are pushed from the host system to the mobile data communication device and that also provides flexibility in the configuration and types of events that can serve to trigger the redirection of the user data items.

There remains yet an additional need for such a system and method that can operate locally on a user's desktop PC or at a distance via a network server.

There remains still another need for such a system and method that provides for secure, transparent delivery of the user-selected data items from the host system to the mobile device.

There remains still another need for such a system and method that provides for notification in a user-selectable manner of user-selectable data items arriving at the mobile device.

There remains yet another need for such a system and method that provides for notification of mobile-specific event occurrences such as, but not limited to calendar event reminders and unsuccessful transmission of user data items originating from the mobile device.

There also remains still another need for such a system and method that provides for notification of user-selected data items from the host system to the mobile device in a userselectable manner that allows the user of the mobile communication device the quick and hands-free ability to determine whether or not to act on a notification.

There also remains yet another need to integrate secretarial-like features into a mobile communication device using the system and method of pushing information from a host to a mobile communication device.

SUMMARY OF THE INVENTION

The present invention overcomes the problems noted above and satisfies the needs in this field for a system and method of pushing user-selected data items from a host system to a user's mobile data communication device upon detecting the occurrence of one or more user-defined event triggers. As used in this application, the term host system refers to the computer where the redirector software is operating. In the preferred embodiment of the present invention, the host system is a user's desktop PC, although, alternatively, the host system could be a network server connected to the user's PC via a local-area network ("LAN) ", or could be any other system that is in communication with the user's desktop PC.

According to the present invention a system and method is provided such that an event-driven redirection computer program ("redirector program") operating at the host system, which, upon sensing a particular user-defined event has occurred, characterizes user-selected data items and then redirects them from the host system to the user's mobile data communication device. s Upon arrival of the user-selected data items at the mobile data communication device, the present invention notifies the user in a user-selectable manner. In addition to the arrival of data items on the device, the occurrence of certain events that are specific to the mobile communication device and the transmission status of data items are events that are within the scope of the invention to notify the user.

A redirector program operating at the host system enables the user to redirect or mirror certain user-selected data items (or parts of data items) from the host system to the user's mobile data communication device upon detecting that one or more user-defined triggering events has occurred. Also operating at the host system are various sub-systems that can be configured to create triggering events, such as a screen saver sub-system or a keyboard sub-system, as well as sub-systems for repackaging the user's data items for transparent delivery to the mobile data device, such as a TCP/IP sub-system or one or more E-Mail sub-systems. Other sub-systems for creating triggering events and repackaging the user's data items could also be present at the host system. The host system also includes a primary memory store where the user's data items are normally stored.

Using the redirector program, the user can select certain data items types for redirection, such as E-mail messages, calendar events, meeting notifications, address entries, journal entries, personal reminders etc. Having selected the data items for redirection, the user can then configure one or more event triggers to be sensed by the redirector program to initiate redirection of the user data items. These user-defined trigger points (or event triggers) include external events, internal events and networked events. Examples of external events include: receiving a message from the user's mobile data communication device to begin redirection; receiving a similar message from some external computer; sensing that the user is no longer in the vicinity of the host system; or any other event that is external to the host system. Internal events could be a calendar alarm, screen saver activation, keyboard timeout, programmable timer, or any other user-defined event that is internal to the host system. Networked events are user-defined messages that are transmitted to the host system from another computer coupled to the host system via a network to initiate redirection. These are just some of the examples of the types of user-defined events that can trigger the redirector program to push data items from the host to the mobile device. Although in the preferred embodiment it is anticipated that the configuration that specifies which data items will be redirected and in what form will be set at the host system, it is within the scope of this invention that such configuration may be set or modified through data sent from the mobile communications device.

In addition to the functionality noted above, the redirector program provides a set of software-implemented control functions for determining the type of mobile data communication device and its address, for programming a preferred list of message types that are to be redirected, and for determining whether the mobile device can receive and process certain types of message attachments, such as word processor or voice attachments. The determination of whether a particular mobile device can receive and process attachments is initially configured by the user of that mobile device at the host system. This configuration can be altered on a global or per message basis by transmitting a command message from the mobile device to the host system. If the redirector is configured so that the mobile data device cannot receive and process word processor or voice attachments, then the redirector routes these attachments to an external machine that is compatible with the particular attachment, such as an attached printer or networked fax machine or telephone. Other types of attachments could be redirected to other types of external machines in a similar fashion, depending upon the capabilities of the mobile device. For example, if a user is traveling and receives a message with an attachment that the user's mobile device can process or display, the user may from a mobile communications device send a command message to the host system indicating that attachment is to be sent to a fax machine at a hotel where the user will be spending the evening. This enables the user to receive important E-mail attachments as long as the host system is provided with sufficient information about the destination where the attachment is to be forwarded.

Once an event has triggered redirection of the user data items, the host system then repackages these items in a manner that is transparent to the mobile data communication device, so that information on the mobile device appears similar to information on the user's host system. In one

embodiment of the present invention, the repackaging of these items includes characterizing the data item type and the priority ranking associated therewith. As discussed above, data item types preferably include E-mail messages, calendar events, meeting notifications, address entries, journal entries, personal reminders, instant email notifications, etc. Priority rankings preferably include regular importance, very important and emergency. It is to be understood that it is clearly within the scope of the invention to expand or decrease the levels of priority rankings in an alternative embodiment of the invention. By characterizing the data item, the mobile data communication device can act on the characterization according to the user-selectable notification scheme as set forth on the mobile device, or alternatively as set forth on the host system. The preferred repackaging method includes wrapping the user data items in an E-mail envelope that corresponds to the address of the mobile data communication device, although, alternatively, other repackaging methods could be used with the present invention, such as special-purpose TCP/IP wrapping techniques, or other methods of wrapping the user selected data items. The repackaging preferably results in E-mail messages generated by the user from the mobile device to be transmitted from the host system, thus enabling the user to appear to have a single E-mail address, such that the recipients of messages sent from the mobile communications device do not know where the user was physically located when the message was first sent. The repackaging also permits both messages to the mobile device and sent from the mobile device to be encrypted and decrypted as well as compressed and decompressed.

In an alternative system and method, the redirector program executes on a network server, and the server is programmed to detect numerous redirection event triggers over the network from multiple user desktop computers coupled to the server via a LAN. The server can receive internal event triggers from each of the user desktops via the network, and can also receive external event triggers, such as messages from the users' mobile data communication devices. In response to receiving one of these triggers, the server redirects the user's data items to the proper mobile data communication device. The user data items and addressing information for a particular mobile device can be stored at the server or at the user's PC. Using this alternative configuration, one redirector program can serve a plurality of users. This alternative configuration could also include an internet- or intranet-based redirector program that could be accessible through a secure webpage or other user interface. The redirector program could be located on an Internet Service Provider's system and accessible only through the Internet. An example of an Internet-based redirector program can allow various Internet-based email and calendar event information companies to redirect their user data items to a particular mobile device. Instant message notifications are one such type of data items that would fall into this category.

In a preferred embodiment of the present invention, a client-based software program operates at the mobile communication device to manage and execute the user-selectable notification scheme ("notification module"). Preferably, the notification module is a component of the primary client software program residing on the mobile device that manages the redirected data items arriving and departing therefrom. In the preferred embodiment, the notification module is called upon on or before presenting any information on the display of the mobile device that is the result of a (1) data item arriving onto the mobile device from the wireless network, (2) data item event reminder, or (3) data item transmission status report. Collectively, these examples and others like them are herein referred to as "notifiable data items".

In another alternative configuration of the present invention, a redirector program operates at both the host system and at the user's mobile data communication device. In this configuration, the user's mobile device operates similarly to the host system described below, and is configured in a similar fashion to push certain user-selected data items from the mobile device to the user's host system (or some other computer) upon detecting an event trigger at the mobile device. This configuration provides two-way pushing of information from the host to the mobile device and from the mobile device to the host.

The primary advantage of the present invention is that it provides a system and method for triggering the continuous and real-time redirection of user-selected data items from a host system to a mobile data communication device with user-selectable notification of the data items at the device. Other advantages of the present invention include: (1) flexibility in defining the types of user data to redirect, and in defining a preferred list of message types that are to be redirected or preferred senders whose messages are to be redirected; (2) flexibility in configuring the system to respond to numerous internal, external and networked triggering events; (3) transparent repackaging of the user data items in a variety of ways such that the mobile data communication device appears as though it were the host system; (4) integration with other host system components such as E-mail, TCP/IP, keyboard, screen saver, webpages and certain programs that can either create user data items or be configured to provide trigger points; (5) the ability to operate locally on a user's desktop system or at a distance via a network server; (6) flexibility in defining a user-selectable notification scheme to notify the user; (7)provides for notification in a user-selectable manner of user-selectable data items arriving at the mobile device; (8) provides for notification of mobile-specific event occurrences such as, but not limited to calendar event reminders and unsuccessful transmission of user data items originating from the mobile device; (9) provides for notification of user-selected data items from the host system to the mobile device in a user-selectable manner that allows the user of the mobile communication device the quick and hands-free ability to determine whether or not to act on a notification; and, (10) provides for integrated secretarial-like features into the mobile communication device. These are just a few of the many advantages of the present invention, as described in more detail below. As will be appreciated, the invention is capable of other and different embodiments, and its several details are capable of modifications in various respects, all without departing from the spirit of the invention. Accordingly, the drawings and description of the preferred embodiments set forth below are to be regarded as illustrative in nature and not restrictive.

BRIEF DESCRIPTION OF THE DRAWINGS

The present invention satisfies the needs noted above as will become apparent from the following description when read in conjunction with the accompanying drawings wherein:

FIG. 1 is a system diagram showing the redirection of user data items from a user's desktop PC (host system) to the user's mobile data communication device, where the redirector software is operating at the user's desktop PC.

FIG. **2** is a system diagram showing the redirection of user data items from a network server (host system) to the user's mobile data communication device, where the redirector software is operating at the server.

FIG. **3** is a block diagram showing the interaction of the redirector software with other components of the host system in FIG. **1** (the user's desktop PC) to enable the pushing of information from the host system to the user's mobile data communication device.

FIG. **4** is a flow chart showing the steps carried out by the redirector software operating at the host system.

FIG. **5** is a flow chart showing the steps carried out by the mobile data communication device to interface with the redirector software operating at the host system.

FIG. **6** is illustrative of the variety of notification options for a typical notification scheme available to the user.

FIG. **7** is illustrative of the steps undertaken by the notification module at the mobile device **24** of the present invention prior to presenting to the user a notifiable data item.

FIG. **8** is a block diagram of the major subsystems and elements comprising a palm-sized, mobile, two-way messaging device **24** that preferably incorporates the invention

DETAILED DESCRIPTION OF THE DRAWINGS

Referring now to the drawings, FIG. **1** is an example system diagram showing the redirection of user data items (such as message A or C) from a user's office PC (host system) **10** to the user's mobile data communication device **24**, where the redirector software **12** is operating at the user's PC. Message A in FIG. **1** represents an internal message sent from desktop **26** to the user's host system **10** via LAN **14**. Message C in FIG. **1** represents an external message from a sender that is not directly connected to LAN **14**, such as the user's mobile data communication device **24**, some other user's mobile device (not shown), or any user connected to the Internet **18**. Message C also represents a command message from the user's mobile data communication device **24** to the host system **10**. As described in more detail in FIG. **3**, the host system **10** preferably includes, along with the typical hardware and software associated with a workstation or desktop computer, the redirector program **12**, a TCP/IP subsystem **42**, a primary message store **40**, an E-mail subsystem **44**, a screen saver subsystem **48**, and a keyboard subsystem **46**.

In FIG. **1**, the host system **10** is the user's desktop system, typically located in the user's office. The host system **10** is connected to a LAN **14**, which also connects to other computers **26**, **28** that may be in the user's office or elsewhere. The LAN **14**, in turn, is connected to a wide area network ("WAN") **18**, preferably the Internet, which is defined by the use of the Transmission Control Protocol/Internet Protocol ("TCP/IP") to exchange information, but which, alternatively could be any other type of WAN. The connection of the LAN **14** to the WAN **18** is via high bandwidth link **16**, typically a T1 or T3 connection. The WAN **18** in turn is connected to a variety of gateways **20**, via connections **32**. A gateway forms a connection or bridge between the WAN **18** and some other type of network, such as an RF wireless network, cellular network, satellite network, or other synchronous or asynchronous land-line connection.

In the example of FIG. **1**, a wireless gateway **20** is connected to the Internet for communicating via wireless link **22** to a plurality of wireless mobile data communication devices **24**. Also shown in FIG. **1** is machine **30**, which could be a FAX machine, a printer, a system for displaying images (such as video) or a machine capable of processing and playing audio files, such as a voice mail system. The present invention includes the ability to redirect certain message attachments to such an external machine **30** if the redirector program configuration data reflects that the mobile device **24** cannot receive and process the attachments, or if the user has specified that certain attachments are not to be forwarded to mobile device **24**, even if such device can process those attachments. By way of example, consider an E-mail sent to a user that includes three attachments—a word processing document, a video clip and an audio clip. The redirection program could be configured to send the text of the E-mail to the remote device, to send the word processing document to a networked printer located near the user, to send the video clip to a store accessible through a secure connection through the internet and to send the audio clip to the user's voice mail system. This example is not intended to limit the breadth and scope of the invention, but rather to illustrate the variety of possibilities embodied in the redirection concept.

The preferred mobile data communication device **24** is a hand-held two-way wireless paging computer, a wirelessly enabled palm-top computer, a mobile telephone with data messaging capabilities, or a wirelessly enabled laptop computer, but could, alternatively be other types of mobile data communication devices capable of sending and receiving messages via a network connection **22**. Although it is preferable for the system to operate in a two-way communications mode, certain aspects of the invention could be beneficially used in a "one and one-half" or acknowledgment paging environment, or even with a one-way paging system. The mobile data communication device **24** includes software program instructions that work in conjunction with the redirector program **12** to enable the seamless, transparent redirection of user-selected data items. FIG. **4** describes the basic method steps of the redirector program **12**, and FIG. **5** describes the steps of the corresponding program operating at the mobile device **24**.

In an alternative embodiment of the present invention, not explicitly shown in the drawings, the mobile device **24** also includes a redirector program. In this embodiment, user selected data items can be replicated from the host to the mobile device and vice versa. The configuration and operation of the mobile device **24** having a redirector program is similar to that described herein with respect to FIGS. **1**–**4**.

A user of the present invention can configure the redirector program **12** to push certain user-selected data items to the user's mobile data communication device **24** when the redirector **12** detects that a particular user-defined event trigger (or trigger point) has taken place. Userselected data items preferably include E-mail messages, calendar events, meeting notifications, address entries, journal entries, personal alerts, alarms, warnings, stock quotes, news bulletins, etc., but could, alternatively, include any other type of message that is transmitted to the host system **10**, or that the host system **10** acquires through the use of intelligent agents, such as data that is received after the host system **10** initiates a search of a database or a website or a bulletin board. In some instances, only a portion of the data item is transmitted to the mobile device **24** in order to minimize the amount of data transmitted via the wireless network **22**. In these instances, the mobile device **24** can optionally send a command message to the host system to receive more or all of the data item if the user desires to receive it.

Among the user-defined event triggers that can be detected by the redirector program **12** are in the preferred

embodiment external events, internal events and networked events. External events preferably include: (1) receiving a command message (such as message C) from the user's mobile data communication device to begin redirection, or to execute some other command at the host, such as a command to enable the preferred list mode, or to add or subtract a particular sender from the preferred list; (2) receiving a similar message from some external computer; and (3) sensing that the user is no longer in the vicinity of the host system; although, alternatively, an external event can be any other detectable occurrence that is external to the host system. Internal events could be a calendar alarm, screen saver activation, keyboard timeout, programmable timer, or any other user-defined event that is internal to the host system. Networked events are user-defined messages that are transmitted to the host system from another computer coupled to the host system via a network to initiate redirection. These are just some of the events that could be used with the present invention to initiate replication of the user-selected data items from the host system **10** to the mobile device **24**.

FIG. **1** shows an E-mail message A being communicated over LAN **14** from computer **26** to the user's desktop system **10** (also shown in FIG. **1** is an external message C, which could be an E-mail message from an Internet user, or could be a command message from the user's mobile device **24**). Once the message A (or C) reaches the primary message store of the host system **10**, it can be detected and acted upon by the redirection software **12**. The redirection software **12** can use many methods of detecting new messages. The preferred method of detecting new messages is using Microsoft's® Messaging API (MAPI), in which programs, such as the redirector program **12**, register for notifications or 'advise syncs' when changes to a mailbox take place. Other methods of detecting new messages could also be used with the present invention.

Assuming that the redirector program **12** is activated, and has been configured by the user (either through the sensing of an internal, network or external event) to replicate certain user data items (including messages of type A or C) to the mobile device **24**, when the message A is received at the host system **10**, the redirector program **12** detects its presence and prepares the message for redirection to the mobile device **24**. In preparing the message for redirection, the redirector program **12** could compress the original message A, could compress the message header, or could encrypt the entire message A to create a secure link to the mobile device **24**.

Also programmed into the redirector **12** is the address of the user's mobile data communication device **24**, the type of device, and whether the device **24** can accept certain types of attachments, such as word processing or voice attachments. If the user's type of mobile device cannot accept these types of attachments, then the redirector **12** can be programmed to route the attachments to a fax or voice number where the user is located using an attached fax or voice machine **30**.

The redirector may also be programmed with a preferred list mode that is configured by the user either at the host system **10**, or remotely from the user's mobile data communication device by transmitting a command message C. The preferred list contains a list of senders (other users) whose messages are to be redirected or a list of message characteristics that determine whether a message is to be redirected. If activated, the preferred list mode causes the redirector program **12** to operate like a filter, only redirecting certain user data items based on whether the data item was sent from a sender on the preferred list or has certain message characteristics that if present will trigger or suppress redirection of the message. In the example of FIG. **1**, if desktop system **26** was operated by a user on the preferred list of host system **10**, and the preferred list option was activated, then message A would be redirected. If, however, desktop **26** was operated by a user not on the host system's preferred list, then message A would not be redirected, even if the user of the host system had configured the redirector to push messages of type A. The user of the host system **10** can configure the preferred list directly from the desktop system, or, alternatively, the user can then send a command message (such as C) from the mobile device **24** to the desktop system **10** to activate the preferred list mode, or to add or delete certain senders or message characteristics from the preferred list that was previously configured. It should be appreciated that a redirection program could combine message characteristics and preferred sender lists to result in a more finely-tuned filter. Messages marked as low priority or that are simple return receipts or message read receipts, for example, could always be suppressed from redirection while messages from a particular sender would always be redirected.

In yet another aspect of the present invention, a description of the notification system and method is now further described. In general, each data item that is redirected to the mobile preferably is characterized as to the data item type and the priority ranking associated therewith. Data item types preferably include E-mail messages, calendar events, meeting notifications, address entries, journal entries, personal reminders, instant email notifications, etc. Priority rankings preferably include at least three different levels of importance, namely regular importance, very high importance and emergency. It is to be understood that it is clearly within the scope of the invention to expand or decrease the levels of priority rankings in an alternative embodiment of the invention. By characterizing the-data-item, the mobile data communication device can act on the characterization according to a user-selectable notification scheme. In addition to the user-selectable notification scheme, the mobile preferably executes a variety of secretary-like actions. The collective features of the present invention provide the mobile the ability to advantageously operate very much like a virtual secretary thereby providing many of the aforesaid advantages of the present invention.

Characterization preferably takes place at the host system. In a second embodiment, the characterization may take place at the mobile. In a third embodiment, a first portion of characterization may take place at the host system and a second portion of characterization may take place at the mobile. In this third embodiment, the user can set which of the two characterizations can take precedence (ie. which wins in a conflict). In the preferred embodiment, the characterization as to the type of the data item and as to the priority ranking are undertaken at the host system. However, the user, preferably, may override the host-side characterization settings regarding the priority rankings at the mobile. It is to be understood that it is preferable that the host system and the mobile are initially synchronized at either an initial hard link or via an over-the-air synchronization to match characterization protocols and notification schemes.

By way of example of the characterization process, after step **68** in FIG. **4**, the redirector program may characterize the data item with a unique data item type identifier and a unique priority ranking in the header of the data item. The data item type information may be taken from the results of the determinations at steps **62**, **64** and **66**. Other suitable means of determining the data type are well within the scope

of the present invention. Characterization as to the priority ranking of the data item may be accomplished in a number of ways. For instance, a data item software package, such as an email messaging client, may associated priority ranking with outbound email messages. This ranking is generally embedded in the header of the email message. However, solely relying on the sender and/or the sender's software package to embed priority ranking is not desirable for the following reasons: (1) some software packages do not have the ability to characterize the priority associated with the data item or where is the ability priority ranking is not associated with all outgoing data items, (2) the sender does not prioritize the data item as the mobile user desires, (3) the priority rankings created by the sender are in conflict with the user-defined rankings. In the preferred embodiment, the priority ranking is created and incorporated into the data item header by the notification element of the redirector program prior to wrapping the outer envelope, such as at step **70** of FIG. **4**. In the preferred embodiment, the filter rules described herein for the redirection of data items from the host system to the mobile device may include priority ranking characterization of data items. In such an instance, the priority ranking may be incorporated into the headers of data items as they successful qualify for redirection to the mobile. Data items may be prioritized according an infinite number of user-selected criteria including but not limited to: sender of the data item; recipients of the data items and, subject of the data item. It is within the scope of the present invention to create a number of other criteria where the priority ranking may differ according to user-selected criteria.

In addition to characterization, the present invention utilizes what is known herein as a "notification scheme". The notification scheme is a plurality of filtering and action rules that are applied to a notifiable data item using some or all of the characterization of the data item. In the preferred embodiment, a set of default rules will be available in the interim for the user until he gets an opportunity to personalize his notification scheme. In the preferred embodiment, there is a plurality of notification schemes on the device, each customizable for the user's benefit. As an example, a first notification scheme may apply only to meeting requests from a certain group of individuals, while a second notification scheme may apply only to the failure of any data items transmitted from the mobile. A third notification scheme may apply to email messages from a certain sender. The infinite variety of combinations will be appreciated with the following description.

The notification scheme provides the user with a plurality of notification alerts such as, but not limited to, audible, visual and vibrating alerts. Continuing with the example, the user would then select whether any reminders are necessary. If so, the user may select the same alert scheme earlier selected or alternatively, choose a different style of reminder. In this manner, the level of intrusion to the user due to the notification may be minimized and yet still be beneficial to the user. To illustrate this point, take for example a calendar event such as a meetings that include party Y are to be audibly alerted, but email message from the same person is just visually alerted.

FIG. **6** is illustrative of the variety of notification options for a typical notification scheme available to the user. In the preferred embodiment, the user at his mobile will have a notification scheme screen that will intelligently navigate the user through the various options and combinations illustrated in FIG. **6**. The reference numerals **222**–**272** identify some of the user selectable choices available for any one notification scheme. Not all choices are illustrated for brevity sake. In essence, the user is prompted through a first series of restriction criteria. Preferably, some of these restriction criteria would then be further restricted a second series of restriction criteria, if so desired by the user.

As a first step **222**, in the notification scheme screen, the user is prompted on whether the current scheme is to be party-specific **224** or to be generally applied **226**. When the party-specific option **224** is activated, the notification scheme only applies to certain predetermined individuals or groups of individuals identified in notifiable data items. User may select from pre-existing individuals in the mobile's address book or create new ones. User may then set parameters of where the individual must be identified. For instance, in the preferred embodiment, the user may require that the individual be identified in any number of ways including at least one of: (1) senders of the data items, (2) attendees of calendar events, (3) individuals listed in the cc: of an email message, or (4) recipients of the data items. In the preferred embodiment, a variety of combinations are possible and user-selectable. In the alternative, the user may choose option **226** such that the notification scheme **220** applies generally without reference to the party identified in the notifiable data item.

At step **228**, the user is prompted to choose from a plurality of data item types. By choosing at least one of the plurality of data item types **230**, **232**, **234**, the notification scheme is restricted in its applications to those data items types selected. It is preferable that a user restriction selection may initiate the user to further restrict in sub-selections. In this manner, the notification scheme may be more finely tuned. For example, in the preferred embodiment, if the user selects email message **230** as a data item restriction to be applied, the user is further prompted to select from one of at least, preferably, three sub-choices, namely: inbound email messages **236**, outbound email messages **238**, or transmission status of email messages **240**.

As a pre-step before selecting the alert at step **242**, the user is prompted as to the priority ranking the data item must have before the alert is executed. Such ranking restriction is designated as steps **241**, **261** and **271**. Although not fully illustrated in FIG. **6**, it is to be understood that the alert selection (steps **242**–**260**) is repeated for each different priority ranking the user selects. Therefore, the user may have a certain alert selection for data items having regular importance, while a completely different alert selection for data items having very high importance. Preferably, however, such subsets of alert selections will be make up only one notification scheme.

At step **242**, the user is prompted to choose from a plurality of alert types, including preferably, audible **244**, visual **246** and vibrate **248** signals. As illustrated in FIG. **6**, the user is provided in the case of an audible signal **244**, a plurality of audible variants **250**–**256**. In the case where the user has selected audible signal, the user is given the opportunity to choose from a plurality of tune variants and a plurality of verbal variants. The verbal variants are very useful in the case where the mobile includes a cooperating headset that includes an earpiece. By way of example, a verbal variant may be the spoken name of the sender of the email message. The mobile would audibly present a computer generated verbal announcement of the fact that an email message was received from a particular sender via a speaker in the mobile or via a headset device. In the present invention, notification may be delivered via the mobile device itself and/or an associated headset device. The headset device preferably includes an ear and integrated mouth-

piece. In a preferred embodiment, the headset device may have all the notification signal capabilities, but the vibrating signal.

Returning back to FIG. **6**, at step **262**, the user is prompted to choose from a plurality of reminder features **264**–**272**. Choice **264** relates to the number of times the user is reminded of the notifiable data item with the foregoing user-selected alert. Choice **266** is the auto snooze feature. This feature allows the user to acknowledge an alert in any number of ways such as pulling the mobile of the holster or opening and viewing notifiable data item while at the same returning the mobile to a rest mode such as returning the mobile to the holster, but get reminded of the notifiable data item in a user-selected predetermined time interval. It can be appreciated by those skilled in the art that a wide number of reminder styles are possible, and such styles are within the scope of the invention. The mobile device **24** will reference a user-selectable notification scheme store (not shown) at step **206** to make a determination of whether or not the data item requires notification. If a determination at step **206** results in the affirmative, a series of possible notification types and actions are possible as set forth in steps **208**–**218**. It is to be understood that other notification types and combinations thereof are within the scope of the present invention. The user-selectable notification scheme store will preferably have a default notification scheme that the user may modify. As can be inferred from the description of the present invention, a plurality of combinations may be applied to the notification scheme. Advantageously, the notification rules may be: fine-tuned and very comprehensive so as to allow a user an extremely wide ambit of freedom and control of reviewing notifiable data items. In effect, notification is optimized for the user; thereby creating for the user a virtual secretary at the mobile device.

Virtual Secretary

The virtual secretary may be invoked in a number of ways. For example, a message arrives having an emergency ranking, the mobile notifies the user accordingly, the users reviews the message, upon cursoring to the end of the message, software on the mobile either (1) prompts the user to reply to the sender, or (2) opens a new message to reply to the sender. In this manner, time which may be of the essence is advantageously saved and navigation through GUIs are avoided for a response.

To further illustrate another feature of the virtual secretary described in the present invention, take for example, an attachment to an email message arrives at the handheld that is not openable or viewable at the mobile. In one embodiment of the present invention, the mobile device will upon or while contemporaneously acting on the user-selected notification scheme will locate a suitable peripheral or other device that will allow the attachment to be presented to the user. More specifically, the software on the mobile will, upon detection of an attachment not presentable to the user, automatically wirelessly transmit an attachment agent from the handheld through a cooperating wireless LAN or WAN. The attachment agent will seek and locate a peripheral or device that is willing and capable to open and present the attachment for the user. The agent will use a variety of user-selectable parameters to determine the most suitable external device to present the attachment. Such parameters include what will constitute a reasonable distance for the user to walk (i.e anywhere on the same floor of an office building, but no further than 250 metres). Upon successfully seek and locate, the agent will return to the device, or alternatively, some form of acknowledgment will be reported to the mobile about the opportunity and details regarding logistics to present the attachment to the user. At that time the user can choose to either view the attachment at the suggested external device or ignore the same.

Ambient Noise Detection

In another embodiment of the present invention, the mobile modifies the audible alert of notifiable data-items according to the noise level around the user. FIG. **8** is a block diagram of the major subsystems and elements comprising a palm-sized, mobile, two-way messaging device **24** that preferably incorporates the invention. In this embodiment, the device prior to notifying the user of a notifiable data item carries through with the following additional steps: (1) detecting the ambient noise, (2) measuring the ambient noise, (3) determining whether to adjust the volume level associated with notification, (4) if adjustment is required, adjusting the volume of audible signal accordingly. Naturally, the ambient noise detection routine is only executed where there is an audible signal associated with the notification. In its broadest terms, the messaging device **24** includes a transmitter/receiver subsystem **300** connected to a digital signal processor (DSP) **302** for digital signal processing of the incoming and outgoing data transmissions, power supply and management subsystem **304**, which supplies and manages power to the overall messaging device components, microprocessor **306**, which is preferably an **X86** architecture processor, that controls the operation of the messaging device, display **308**, which is preferably a full graphic LCD, FLASH memory **310**, RAM **312**, serial input and output **314**, keyboard **316**, thumbwheel **318** and thumbwheel control logic (not shown). In its intended use, a message comes via a wireless data network into subsystem **306**, where it is demodulated via DSP **302** and decoded and presented to microprocessor **306** for display on display **308**. To acknowledge a notification provided pursuant to the present invention, access the display of the message, the user may choose from functions listed under a menu presented as a result of user interaction with thumbwheel **318**. If the message is an email message, the user may chose to respond to the email by selecting "Reply" from a menu presented on the display through interaction via thumbwheel **318** or via menu selection from keyboard **316**. When the microprocessor **306** receives an indication that the message is to be sent, it processes the message for transport and, by directing and communicating with transmitter/receiver subsystem **300**, enables the reply message to be sent via the wireless communications data network to the intended recipient. Similar interaction through I/O devices keyboard **316** and thumbwheel **318** can be used to initiate full-text messages or to forward messages to another party. The device **24** is preferably Bluetooth™ enabled.

After the redirector has determined that a particular message should be redirected, and it has prepared the message for redirection, the software **12** then sends the message A to a secondary memory store located in the mobile device **24**, using whatever means are necessary. In the preferred embodiment this method is to send the message A back over the LAN **14**, WAN **18**, and through the wireless gateway **20** to the mobile data communication device **24**. In doing so, the redirector preferably repackages message A as an E-mail with an outer envelope B that contains the addressing information of the mobile device **24**, although alternative repackaging techniques and protocols could be used, such as a TCP/EP repackaging and delivery method (most commonly used in the alternative server configuration shown in FIG.**2**). The wireless gateway **20** it,

requires this outer envelope information B in order to know where to send the redirected message A. Once the message (A in B) is received by the mobile device **24**, the outer envelope B is removed and the original message A is placed in the secondary memory store within the mobile device **24**. By repackaging and removing the outer envelope in this manner, the present invention causes the mobile computer **24** to appear to be at the same physical location as the host system **10**, thus creating a transparent system.

In the case where message C is representative of an external message from a computer on the Internet **18** to the host system **10**, and the host **10** has been configured to redirect messages of type C, then in a similar manner to message A, message C would be repackaged with an outer envelope B and transmitted to the user's mobile device **24**. In the case where message C is representative of a command message from the user's mobile device **24** to the host system **10**, the command message C is not redirected, but is acted upon by the host system **10**.

If the redirected user data item is an E-mail message, as described above, the user at the mobile device **24** sees the original subject, sender's address, destination address, carbon copy and blind carbon copy. When the user replies to this message, or when the user authors a new message, the software operating at the mobile device **24** adds a similar outer envelope to the reply message (or the new message) to cause the message to be routed first to the user's host system **10**, which then removes the outer envelope and redirects the message to the final destination, such as back to computer **26**. In the preferred embodiment, this results in the outgoing redirected message from the user's host system **10** being sent using the E-mail address of the host mailbox, rather than the address of the mobile device, so that it appears to the recipient of the message that the message originated from the user's desktop system **10** rather than the mobile data communication device. Any replies to the redirected message will then be sent to the desktop system **10**, which if it is still in redirector mode, will repackage the reply and resend it to the user's mobile data device, as described above.

FIG. **2** is an alternative system diagram showing the redirection of user data items from a network server **11** to the user's mobile data communication device **24**, where the redirector software **12** is operating at the server **11**. This configuration is particularly advantageous for use with message servers such as Microsoft's® Exchange Server, which is normally operated so that all user messages are kept in one central location or mailbox store on the server instead of in a store within each user's desktop PC. This configuration has the additional advantage of allowing a single system administrator to configure and keep track of all users having messages redirected. If the system includes encryption keys, these too can be kept at one place for management and update purposes.

In this alternative configuration, server **11** preferably maintains a user profile for each user's desktop system **10**, **26**, **28**, including information such as whether a particular user can have data items redirected, which types of message and information to redirect, what events will trigger redirection, the address of the users' mobile data communication device **24**, the type of mobile device, and the user's preferred list, if any. The event triggers are preferably detected at the user's desktop system **10**, **26**, **28** and can be any of the external, internal or network events listed above. The desktop systems **10**, **26**, **28** preferably detect these events and then transmit a message to the server computer **11** via LAN **14** to initiate redirection. Although the user data items are preferably stored at the server computer **11** in this embodiment, they could, alternatively, be stored at each user's desktop system **10**, **26**, **28**, which would then transmit them to the server computer **11** after an event has triggered redirection.

As shown in FIG. **2**, desktop system **26** generates a message A that is transmitted to and stored at the host system **11**, which is the network server operating the redirector program **12**. The message A is for desktop system **10**, but in this embodiment, user messages are stored at the network server **11**. When an event occurs at desktop system **10**, an event trigger is generated and transmitted to the network server **11**, which then determines who the trigger is from, whether that desktop has redirection capabilities, and if so, the server (operating the redirector program) uses the stored configuration information to redirect message A to the mobile computer **24** associated with the user of desktop system **10**.

As described above with reference to FIG. **1**, message C could be either a command message from a user's mobile data communication device **24**, or it could be a message from an external computer, such as a computer connected to the Internet **18**. If the message C is from an Internet computer to the user's desktop system **10**, and the user has redirection capabilities, then the server **11** detects the message C, repackages it using electronic envelope B, and redirects the repackaged message (C in B) to the user's mobile device **24**. If the message C is a command message from the user's mobile device **24**, then the server **11** simply acts upon the command message.

Turning now to FIG. **3**, a block diagram showing the interaction of the redirector software **12** with additional components of the host system **10** of FIG. **1** (the desktop PC) to enable more fully the pushing of information from the host system **10** to the user's mobile data communication device **24** is set forth. These additional components are illustrative of the type of event-generating systems that can be configured and used with the redirector software **12**, and of the type of repackaging systems that can be used to interface with the mobile communication device **24** to make it appear transparent to the user.

The desktop system **10** is connected to LAN **14**, and can send and receive data, messages, signals, event triggers, etc., to and from other systems connected to the LAN **14** and to external networks **18**, **22**, such as the Internet or a wireless data network, which are also coupled to the LAN **14**. In addition to the standard hardware, operating system, and application programs associated with a typical microcomputer or workstation, the desktop system **10** includes the redirector program **12**, a TCP/IP sub-system **42**, an E-mail sub-system **44**, a primary data storage device **40**, a screen saver sub-system **48**, and a keyboard sub-system **46**. The TCP/IP and E-mail subsystems **42**, **44** are examples of repackaging systems that can be used to achieve the transparency of the present invention, and the screen saver and keyboard sub-systems **46**, **48** are examples of event generating systems that can be configured to generate event messages or signals that trigger redirection of the user selected data items.

The method steps carried out by the redirector program **12** are described in more detail in FIG. **4**. The basic functions of this program are: (1) configure and setup the user-defined event trigger points that will start redirection; (2) configure the types of user data items for redirection and optionally configure a preferred list of senders whose messages are to be redirected; (3) configure the type and capabilities of the

user's mobile data communication device; (4) receive messages and signals from the repackaging systems and the event generating systems; and (5) command and control the redirection of the user-selected data items to the mobile data communication device via the repackaging systems. Other functions not specifically enumerated could also be integrated into this program.

The E-Mail sub-system **44** is the preferred link to repackaging the user-selected data items for transmission to the mobile data communication device **24**, and preferably uses industry standard mail protocols, such as SMTP, POP, IMAP, MIME and RFC-**822**, to name but a few. The E-Mail sub-system **44** can receive messages A from external computers on the LAN **14**, or can receive messages C from some external network such as the Internet **18** or a wireless data communication network **22**, and stores these messages in the primary data store **40**. Assuming that the redirector **12** has been triggered to redirect messages of this type, the redirector detects the presence of any new messages and instructs the E-Mail system **44** to repackage the message by placing an outer wrapper B about the original message A (or C), and by providing the addressing information of the mobile data communication device **24** on the outer wrapper B. As noted above, this outer wrapper B is removed by the mobile device **24**, and the original message A (or C) is then recovered, thus making the mobile device **24** appear to be the desktop system **10**.

In addition, the E-Mail sub-system **44** receives messages back from the mobile device **24** having an outer wrapper with the addressing information of the desktop system **10**, and strips this information away so that the message can be routed to the proper sender of the original message A (or C). The E-Mail sub-system also receives command messages C from the mobile device **24** that are directed to the desktop system **10** to trigger redirection or to carry out some other function. The functionality of the E-Mail sub-system **44** is controlled by the redirector program **12**.

The TCP/IP sub-system **42** is an alternative repackaging system. It includes all of the functionality of the E-Mail sub-system **44**, but instead of repackaging the user-selected data items as standard E-mail messages, this system repackages the data items using special-purpose TCP/IP packaging techniques. This type of special-purpose sub-system is useful in situations where security and improved speed are important to the user. The provision of a special-purpose wrapper that can only be removed by special software on the mobile device **24** provides the added security, and the bypassing of E-mail store and forward systems can improve speed and real-time delivery.

As described previously, the present invention can be triggered to begin redirection upon detecting numerous external, internal and networked events, or trigger points. Examples of external events include: receiving a command message from the user's mobile data communication device **24** to begin redirection; receiving a similar message from some external computer; sensing that the user is no longer in the vicinity of the host system; or any other event that is external to the host system. Internal events could be a calendar alarm, screen saver activation, keyboard timeout, programmable timer, or any other user-defined event that is internal to the host system. Networked events are user-defined messages that are transmitted to the host system from another computer that is connected to the host system via a network to initiate redirection.

The screen saver and keyboard sub-systems **46**, **48** are examples of systems that are capable of generating internal events. Functionally, the redirector program **12** provides the user with the ability to configure the screen saver and keyboard systems so that under certain conditions an event trigger will be generated that can be detected by the redirector **12** to start the redirection process. For example, the screen saver system can be configured so that when the screen saver is activated, after, for example, 10 minutes of inactivity on the desktop system, an event trigger is transmitted to the redirector **12**, which starts redirecting the previously selected user data items. In a similar manner the keyboard sub-system can be configured to generate event triggers when no key has been depressed for a particular period of time, thus indicating that redirection should commence. These are just two examples of the numerous application programs and hardware systems internal to the host system **10** that can be used to generate internal event triggers.

FIGS. **4** and **5**, set forth, respectively, flow charts showing the steps carried out by the redirector software **12** operating at the host system **10**, and the steps carried out by the mobile data communication device **24** in order to interface with the host system. Turning first to FIG. **4**, at step **50**, the redirector program **12** is started and initially configured. The initial configuration of the redirector **12** includes: (1) defining the event triggers that the user has determined will trigger redirection; (2) selecting the user data items for redirection; (3) selecting the repackaging sub-system, either standard E-Mail, or special-purpose technique; (4) selecting the type of data communication device, indicating whether and what type of attachments the device is capable of receiving and processing, and inputting the address of the mobile device; and (5) configuring the preferred list of user selected senders whose messages are to be redirected.

FIG. **4** sets forth the basic steps of the redirector program **12** assuming it is operating at a desktop system **10**, such as shown in FIG. **1**. If the redirector **12** is operating at a network server **11**, as shown in FIG. **2**, then additional configuration steps may be necessary to enable redirection for a particular desktop system **10**, **26**, **28** connected to the server, including: (1) setting up a profile for the desktop system indicating its address, events that will trigger redirection, and the data items that are to be redirected upon detecting an event; (2) maintaining a storage area at the server for the data items; and (3) storing the type of data communication device to which the desktop system's data items are to be redirected, whether and what type of attachments the device is capable of receiving and processing, and the address of the mobile device. The configuration process may also include the priority ranking of certain data items that are to be redirected. For instance, email messages from individual K may be marked as very important priority ranking while email messages all other individuals are regular importance priority ranking. Likewise, calendar events having individual K as an attendee are marked as very important priority ranking while all other calendar events are normal priority. In this manner the redirector program may mark the data items as data items are redirected in the user-selected prioritization for appropriate notification at the user's mobile communication device.

Once the redirector program is configured **50**, the trigger points (or event triggers) are enabled at step **52**. The program **12** then waits **56** for messages and signals **54** to begin the redirection process. A message could be an E-Mail message or some other user data item than may have been selected for redirection, and a signal could be a trigger signal, or could be some other type of signal that has not been configured as an event trigger. When a message or signal is detected, the

program determines **58** whether it is one of the trigger events that has been configured by the user to signal redirection. If so, then at step **60** a trigger flag is set, indicating that subsequently received user data items (in the form of messages) that have been selected for redirection should be pushed to the user's mobile data communication device **24**.

If the message or signal **54** is not a trigger event, the program then determines at steps **62**, **68** and **66** whether the message is, respectively, a system alarm **62**, an E-Mail message **64**, or some other type of information that has been selected for redirection. If the message or signal is none of these three items, then control returns to step **56**, where the redirector waits for additional messages **54** to act upon. If, however the message is one of these three types of information, then the program **12** determines, at step **68**, whether the trigger flag has been set, indicating that the user wants these items redirected to the mobile device. If the trigger flag is set, then at step **70**, the redirector **12** causes the repackaging system (E-Mail or TCP/IP) to add the outer envelope to the user data item, and at step **72** the repackaged data item is then redirected to the user's mobile data communication device **24** via LAN **14**, WAN **18**, wireless gateway **20** and wireless network **22**. At step **72**, the repackaging may also include the marking of the data item as to its data item type and/or priority level. Control then returns to step **56** where the program waits for additional messages and signals to act upon. Although not shown explicitly in FIG. **4**, after step **68**, the program could, if operating in the preferred list mode, determine whether the sender of a particular data item is on the preferred list, and if not, then the program would skip over steps **70** and **72** and proceed directly back to step **56**. If the sender was on the preferred list, then control would similarly pass to steps **70** and **72** for repackaging and transmission of the message from the preferred list sender.

FIG. **5** sets forth the method steps carried out by the user's mobile data communication device **24** in order to interface to the redirector program **12** of the present invention. At step **80** the mobile software is started and the mobile device **24** is configured to operate with the system of the present invention, including, for example, storing the address of the user's desktop system **10**.

At step **82**, the mobile device waits for messages and signals **84** to be generated or received. Assuming that the redirector software **12** operating at the user's desktop system **10** is configured to redirect upon receiving a message from the user's mobile device **24**, at step **86**, the user can decide to generate a command message that will start redirection. If the user does so, then at step **88** the redirection message is composed and sent to the desktop system **10** via the wireless network **22**, through the wireless gateway **20**, via the Internet **18** to the LAN **14**, and is finally routed to the desktop machine **10**. In this situation where the mobile device **24** is sending a message directly to the desktop system **10**, no outer wrapper is added to the message (such as message C in FIGS. **1** and **2**). In addition to the redirection signal, the mobile device **24** could transmit any number of other commands to control the operation of the host system, and in particular the redirector program **12**. For example, the mobile **24** could transmit a command to put the host system into the preferred list mode, and then could transmit additional commands to add or subtract certain senders from the preferred list. In this manner, the mobile device **24** can dynamically limit the amount of information being redirected to it by minimizing the number of senders on the preferred list. Other example commands include: (1) a message to change the configuration of the host system to enable the mobile device **24** to receive and process certain attachments; (2) a message to instruct the host system to redirect an entire data item to the mobile device in the situation where only a portion of a particular data item has been redirected; (3) a message to instruct the host system to modify the priority level associated with classes or subclasses of data items.

Turning back to FIG. **5**, if the user signal or message is not a direct message to the desktop system **10** to begin redirection (or some other command), then control is passed to step **90**, which determines if a message has been received. If a message is received by the mobile, and it is a message from the user's desktop **10**, as determined at step **92**, then at step **94** a desktop redirection flag is set "on" for this message, and control passes to step **96** where the outer envelope is removed. Following step **96**, or in the situation where the message is not from the user's desktop, as determined at step **92**, control passes to step **98**, which displays the message for the user on the mobile device's display. The mobile unit **24** then returns to step **82** and waits for additional messages or signals.

In an alternative embodiment of the invention relating to the notification method and system of the present invention, following step **96** or step **92**, control passes to step **200**, which notifies the user of the data item according the present invention. FIG. **7** is illustrative of the steps undertaken by the notification module at the mobile device **24** of the present invention prior to presenting to the user at step **98**. As will be understood upon the review of FIG. **7**, the notification module will allow notification to the user of not only the arrival of data items from the host system, but also is useful in circumstances where the user would like distinct notification of (1) an unsuccessful transmission of a data item from the mobile device **24** to the host system x; (2) the arrival at the mobile device **24** of regular importance data items; (3) the arrival at the mobile device **24** of high importance data items (4) reminders of calendar events such as appointments having regular importance; (5) reminders of calendar events such as appointments having high importance; (6) the arrival at the mobile device **24** of calendar events; and (7) the arrival at the mobile device **24** of emergency notifications. At step **202**, the mobile device **24** examines the data item and subsequently determines the data item type and the priority ranking at step **204**, if any, associated with the data item. In the preferred embodiment of the notification module, a counter number embedded in the header of the data item may associate the data item type and priority associated therewith. Alternative marking methods may used in replace of or in conjunction with the counter number to indicate the data type and priority, and such alternative methods are well within the scope of the present invention. The mobile device **24** will get the data item type and any priority ranking associated with the data item at step **206**. Next, the notification module will make reference to a user-selectable notification scheme store (not shown) at step **208**. Upon reviewing the notification schemes in the store, the module will be able to make a determination of whether or not the data item requires notification via steps **210** and **212**. More specifically, at step **210**, the module determines whether there is a party-specific notification scheme for the data item. If a determination at step **210** results in the affirmative, the appropriate party-specific alert is called and acted upon at step **214**. At step **216**, the notification module will apply any reminder as set forth in the party-specific notification scheme. Control passes then back to step **204**.

An emergency notification setting is defaulted as true. When the setting remains in this state, the emergency notification is useful in the instance where the user chooses

to power down his entire mobile device ?.4 or just the radio component of the device. In such an instance, the assumption is that the user still desires to receive only extremely important data items, hence the name "emergency notification". In such an occurrence, a data item having a command associated therewith re-activates the mobile device only long enough to be received by the mobile device and powers down the radio component of the mobile device promptly thereafter so as to prevent any other transmission from arriving or departing from the device.

The present invention provides flexibility to the user by providing the user the capability to predetermine a set of notification rules. For instance, depending on the type of data item received by the notification module, the user may chose the notifcation module to act differently. In the preferred embodiment, notification types include visual, vibrate and audible notifications and within theses types of notifications there are sub-types of notifications such as tune **1**, tune **2** and tune **3** for the audible signal notification. The user has control over this selection via a user interface (not shown) on the device.

If the mobile device **24** determines that a message has not been received at step **90**, then control passes to step **100**, where the mobile determines whether there is a message to send. If not, then the mobile unit returns to step **82** and waits for additional messages or signals. If there is at least one message to send, then at step **102** the mobile determines whether it is a reply message to a message that was received by the mobile unit. If the message to send is a reply message, then at step **108**, the mobile determines whether the desktop redirection flag is on for this message. If the redirection flag is not on, then at step **106** the reply message is simply transmitted from the mobile device to the destination address via the wireless network **22**. If, however, the redirection flag is on, then at step **110** the reply message is marked as to its data item type and priority level and repackaged with the outer envelope having the addressing information of the user's desktop system **10**, and the repackaged message is then transmitted to the desktop system **10** at step **106**. As described above, the redirector program **12** executing at the desktop system then strips the outer envelope and routes the reply message to the appropriate destination address using the address of the desktop system as the "from" field, so that to the recipient of the redirected message, it appears as though it originated from the user's desktop system rather than the mobile data communication device.

If, at step **102**, the mobile determines that the message is not a reply message, but an original message, then control passes to step **104**, where the mobile determines if the user is using the redirector software **12** at the desktop system **10**, by checking the mobile unit's configuration. If the user is not using the redirector software **12**, then the message is simply transmitted to the destination address at step **106**. If, however, the mobile determines that the user is using the redirector software **12** at the desktop system **10**, then control passes to step **110**, where the message is marked for data item type and priority level and the outer envelope is added to the message. The repackaged original message is then transmitted to the desktop system **10** at step **106**, which, as described previously, strips the outer envelope and routes the message to the correct destination. Following transmission of the message at step **106**, control of the mobile returns to step **82** and waits for additional messages or signals.

Having described in detail the preferred embodiments of the present invention, including the preferred methods of operation, it is to be understood that this operation could be carried out with different elements and steps. This preferred embodiment is presented only by way of example and is not meant to limit the scope of the present invention which is defined by the following claims.

What is claimed:

1. A method of replicating data items from a host system to a mobile data communication device, comprising the steps of:

receiving a plurality of data items at the host system, wherein the plurality of data items are transmitted to the host system from a plurality of remote systems;

characterizing the plurality of data items at the host system by the host system automatically determining a data item type and a data item priority for each of the received data items;

generating an e-mail message for each of the received data items, wherein the e-mail message includes the received data item and a header that includes the data item type and the data item priority determined by the host system in the characterizing step;

configuring a plurality of notification schemes at the mobile data communication device, wherein each of the plurality of notification schemes includes a plurality of notification fields that determine whether a particular notification scheme should be applied to a particular data item and an alert type, and wherein the plurality of notification fields include a party specific field that identifies a person associated with the data item, a data item type field that identifies a type of the data item, and a data item priority field that identifies a priority ranking of the data item;

redirecting the e-mail messages from the host system to the mobile data communication device;

recovering the data items, the data item types and the data item priorities from the redirected e-mail messages at the mobile data communication device; and

applying the plurality of notification schemes to the redirected data items at the mobile data communication device by determining whether each data item and its characterized data item type and data item priority matches the party specific field, the data item type field and the data item priority field, respectively, of a particular notification scheme of the plurality of notification schemes, and if so, then enabling the alert type at the mobile data communication device for the particular notification scheme that matches the data item.

2. The method of claim **1**, further comprising the steps of:

characterizing the plurality of data items at the mobile data communication device by automatically determining a data item type and a data item priority for each of the redirected data items;

providing priority characterization input to the mobile data communication device that indicates whether the characterization step at the mobile data communication device should take priority over the characterization step at the host system; and

if the priority characterization input indicates that the mobile data communication device takes priority over the host system, then using the data item type and-data item priority information from the characterization step at the mobile data communication device during the applying step to determine whether a particular notification scheme should be applied to the data item.

3. The method of claim **1**, further comprising the steps of:

providing a mobile data communication device having an associated earpiece with a speaker;

providing at least one notification scheme in which the alert type includes the spoken name of a person associated with the data item; and

if the mobile data communication device determines that the at least one notification scheme should be applied to a data item, then outputting the spoken name of the person associated with the data item to the speaker of the earpiece.

4. The method of claim **1**, further comprising the steps of:

configuring the mobile data communication device into a low power state in which the mobile data communication device can receive messages;

providing an emergency data item priority characterization;

redirecting a data item to the mobile data communication device in which the data item priority field is set to the emergency data item priority characterization;

receiving the data item at the mobile data communication device;

determining that the data item priority field is set to the emergency data item priority characterization, and in response, configuring the mobile data communication device into a normal power state and immediately displaying the data item on the mobile data communication device.

5. The method of claim **1**, wherein the data item types include e-mail messages received from the remote systems, and further wherein the e-mail messages are characterized as either inbound e-mail data item types or outbound e-mail data item types.

6. The method of claim **5**, wherein the e-mail messages are further characterized as transmission status data item types.

7. A method of redirecting e-mail messages and meeting notices from a host system to a mobile data communication device via a wireless network, comprising the steps of:

receiving e-mail messages and meeting notices from a plurality of remote systems at the host system;

generating a plurality of electronic envelopes at the host system, wherein the electronic envelopes include the received e-mail messages or the meeting notices;

the host system automatically generating characterization information regarding the electronic envelopes, the characterization information including a data item type that indicates whether the electronic envelope contains an e-mail message or a meeting notice and data item priority ranking that indicates a priority of the e-mail message or meeting notice;

the host system appending the characterization information to the electronic envelopes and redirecting the electronic envelopes from the host system to the mobile data communication device via the wireless network;

receiving the electronic envelopes at the mobile data communication device;

extracting the characterization information from the electronic envelopes;

comparing the characterization information to a plurality of stored notification schemes at the mobile data communication device to determine whether to enable a particular alert type associated with the notification scheme, wherein the notification scheme includes a user defined field for the data item type and the data item priority.

8. A method of automatically characterizing electronic data items at a messaging system prior to redirection to a wireless mobile communication device that applies a plurality of notification schemes to the characterized electronic data items, comprising the steps of:

receiving a plurality of data items at the messaging system;

the messaging system characterizing the plurality of data items by automatically determining a data item type and data item priority for each of the received plurality of data items;

the messaging system generating an e-mail message for each of the received data items that includes the data item and a header that includes the determined data item type and data item priority;

transmitting the e-mail messages from the messaging system to the wireless mobile communication device via a wireless gateway that couples the messaging system to a wireless data network;

receiving the e-mail messages at the wireless mobile communication device; and

the wireless mobile communication device automatically determining the type and priority of each received data item by examining the header in the e-mail messages and comparing the data item type and data item priority information in the header to stored information in the wireless mobile communication device;

based on the comparison step, the wireless mobile communication device then applying one of a plurality of stored notification schemes to the received e-mail messages.

* * * * *