US007748873B2

(12) **United States Patent**
Kim et al.

(10) **Patent No.: US 7,748,873 B2**
(45) **Date of Patent: Jul. 6, 2010**

(54) **SIDE ILLUMINATION LENS AND LUMINESCENT DEVICE USING THE SAME**

(75) Inventors: **Do-Hyung Kim**, Suwon (KR); **Chung-Hoon Lee**, Gwangmyeong-Si (KR); **Keon-Young Lee**, Ansan (KR); **Kwang-Il Park**, Seoul (KR)

(73) Assignee: **Seoul Semiconductor Co., Ltd.**, Seoul (KR)

(*) Notice: Subject to any disclaimer, the term of this patent is extended or adjusted under 35 U.S.C. 154(b) by 302 days.

(21) Appl. No.: **11/576,882**

(22) PCT Filed: **Oct. 7, 2005**

(86) PCT No.: **PCT/KR2005/003346**

§ 371 (c)(1),
(2), (4) Date: **Apr. 6, 2007**

(87) PCT Pub. No.: **WO2006/080729**

PCT Pub. Date: **Aug. 3, 2006**

(65) **Prior Publication Data**

US 2007/0284993 A1 Dec. 13, 2007

(30) **Foreign Application Priority Data**

Oct. 7, 2004	(KR)	10-2004-0079909
Jan. 3, 2005	(KR)	10-2005-0000269
Jun. 28, 2005	(KR)	10-2005-0056436
Sep. 8, 2005	(KR)	10-2005-0083743

(51) **Int. Cl.**
F21V 5/00 (2006.01)

(52) **U.S. Cl.** **362/328**; 362/308; 362/309; 362/310; 362/326; 362/327; 362/329; 257/98; 257/99; 257/100; 359/362; 359/642; 359/648

(58) **Field of Classification Search** 362/84, 362/307–310, 326–329, 800; 257/98–100; 359/362, 642, 648, 664, 708, 364, 365, 534, 359/542

See application file for complete search history.

(56) **References Cited**

U.S. PATENT DOCUMENTS

1,734,834	A	11/1929	Steward et al.
2,448,244	A	8/1948	Arnold

(Continued)

FOREIGN PATENT DOCUMENTS

AT	243828	7/2003

(Continued)

OTHER PUBLICATIONS

English language abstract of Japanese Publication No. 6-201996.
English language abstract of Japanese Publication No. 2004-221598.

(Continued)

Primary Examiner—Sandra L O'Shea
Assistant Examiner—Meghan K Dunwiddie
(74) *Attorney, Agent, or Firm*—H.C. Park & Associates, PLC

(57) **ABSTRACT**

The present invention relates to a side illumination lens and a luminescent device using the same, and provides a body, a total reflection surface with a total reflection slope with respect to a central axis of the body, and a linear and/or curved refractive surface(s) formed to extend from a periphery of the total reflection surface; and a luminescent device including the lens. According to the present invention, a lens with total internal reflection surfaces with different slopes, and a linear and/or curved refractive surface(s) allows light emitted forward from a luminescent chip to be guided to a side of the lens. Further, a linear surface(s) formed in a direction perpendicular or parallel to a central axis of a lens and a curved surface are formed on an edge of the lens so that a process of fabricating the lens is facilitated, thereby reducing a defective rate and fabrication costs of the lens.

15 Claims, 24 Drawing Sheets

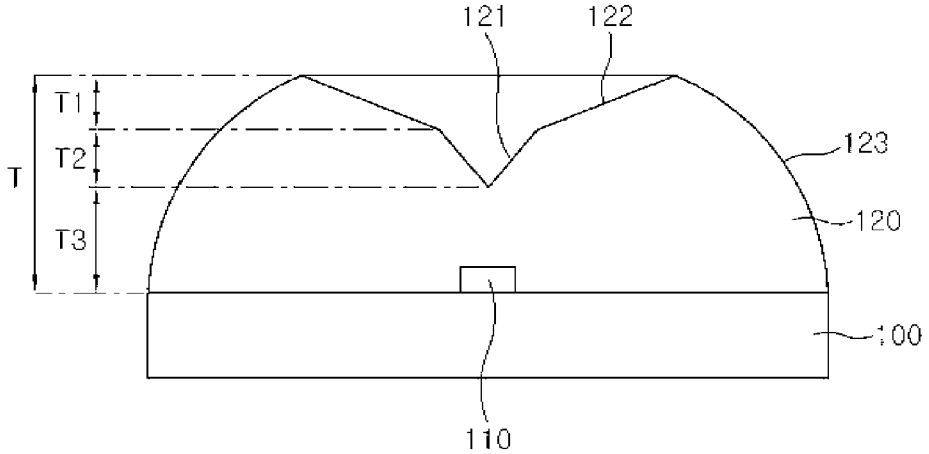

U.S. PATENT DOCUMENTS

2,761,056	A	8/1956	Lazo
2,907,869	A	10/1959	Vaccaro et al.
3,223,833	A	12/1965	Protzmann
3,300,646	A	1/1967	Casebeer
3,349,234	A	10/1967	Schwarz
3,539,796	A	11/1970	Zychal
3,586,851	A	6/1971	Rudolph
3,610,941	A	10/1971	West
3,821,590	A	6/1974	Kosman et al.
4,853,593	A	8/1989	Stein
5,177,669	A	1/1993	Juskey et al.
5,958,100	A	9/1999	Farnworth et al.
6,274,924	B1	8/2001	Carey et al.
6,473,554	B1	10/2002	Pelka et al.
6,517,218	B2	2/2003	Hochstein
6,582,103	B1	6/2003	Popovich et al.
6,598,998	B2	7/2003	West et al.
6,607,286	B2	8/2003	West et al.
6,647,199	B1	11/2003	Pelka et al.
6,679,621	B2	1/2004	West et al.
6,747,293	B2	6/2004	Nitta et al.
6,924,514	B2	8/2005	Suenaga
7,075,114	B2	7/2006	Abe et al.
7,321,161	B2	1/2008	Teixeira et al.
2001/0030866	A1	10/2001	Hochstein
2002/0044454	A1	4/2002	Roller et al.
2004/0041222	A1	3/2004	Loh
2004/0126913	A1	7/2004	Loh
2004/0180459	A1	9/2004	Hsu
2004/0227149	A1	11/2004	Ibbetson et al.
2005/0045901	A1	3/2005	Wall, Jr.
2005/0269587	A1	12/2005	Loh et al.
2006/0012299	A1	1/2006	Suehiro et al.
2006/0103012	A1	5/2006	Chin

FOREIGN PATENT DOCUMENTS

AT	380971	12/2007
AU	5379998	7/1998
AU	6202600	2/2001
CA	2274828	6/1998
CA	2402037	2/2001
CN	1380704	11/2002
DE	2309586	8/1973
DE	3633203	3/1988
DE	3825436	3/1989
DE	4237107	5/1994
DE	69723101	12/2003
DE	60037427	2/2009
EP	0403764	12/1990
EP	0442529	8/1991
EP	0531939	3/1993
EP	0732679	9/1996
EP	0733850	9/1996
EP	0733928	9/1996
EP	0944800	6/2003
EP	1200772	12/2007
GB	2283849	5/1995
JP	S58-173248	11/1983
JP	S61-42158	2/1986
JP	63-55503	3/1988
JP	63-206713	8/1988
JP	2-143202	6/1990
JP	H03-11771	1/1991
JP	5-46062	6/1993
JP	5-53252	7/1993
JP	6-201996	7/1994
JP	07-111343	4/1995
JP	H11-40724	2/1999
JP	11-110790	4/1999
JP	11-121809	4/1999
JP	2000150967	5/2000
JP	2000-174347	6/2000
JP	2001185763	7/2001
JP	2002-512727	4/2002
JP	2002-176203	6/2002
JP	2002252373	9/2002
JP	2003-110146	4/2003
JP	2003-303936	10/2003
JP	2004-221598	8/2004
JP	2004-342791	12/2004
JP	4015421	9/2007
KR	1020030024283	3/2003
KR	1020050111298	11/2005
KR	1020060002326	1/2006
RU	2134000	7/1999
WO	92/13232	8/1992
WO	97/30431	8/1997
WO	98/26212	6/1998
WO	99/06759	2/1999
WO	00/55914	9/2000
WO	01/07828	2/2001
WO	2004102685	11/2004

OTHER PUBLICATIONS

Non-Final Office Action dated Aug. 1, 2006 issued in co-pending U.S. Appl. No. 11/178,144.

Final Office Action dated Mar. 12, 2007 issued in co-pending U.S. Appl. No. 11/178,144.

Notice of Allowance dated Nov. 29, 2007 issued in co-pending U.S. Appl. No. 11/178,144.

Non-Final Office Action dated Oct. 16, 2008 issued in co-pending U.S. Appl. No. 11/575,128.

Non-Final Office Action dated Jul. 24, 2009 issued in co-pending U.S. Appl. No. 11/575,128.

Final Office Action dated Dec. 29, 2009 issued in co-pending U.S. Appl. No. 11/575,128.

Non-Final Office Action dated Jun. 2, 2009 issued in co-pending U.S. Appl. No. 12/196,028.

[Fig. 1]

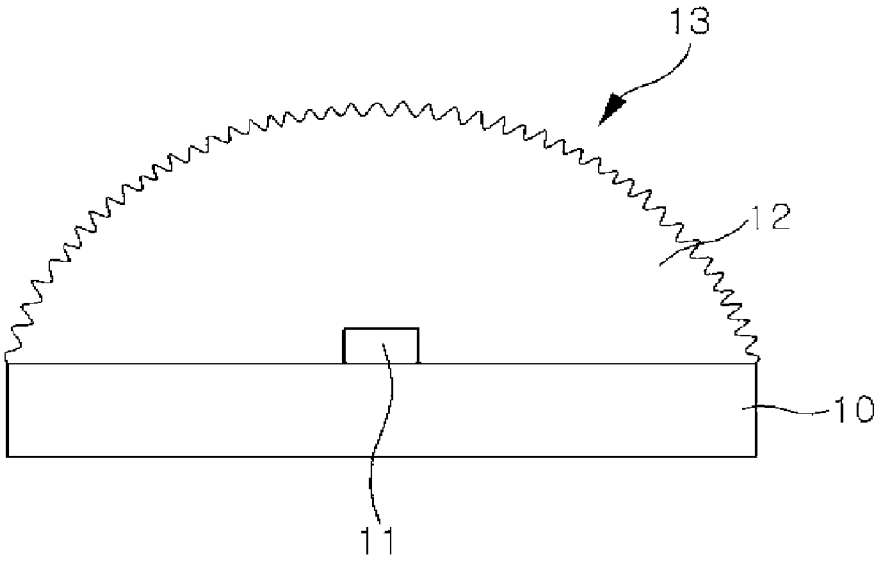

[Fig. 2]

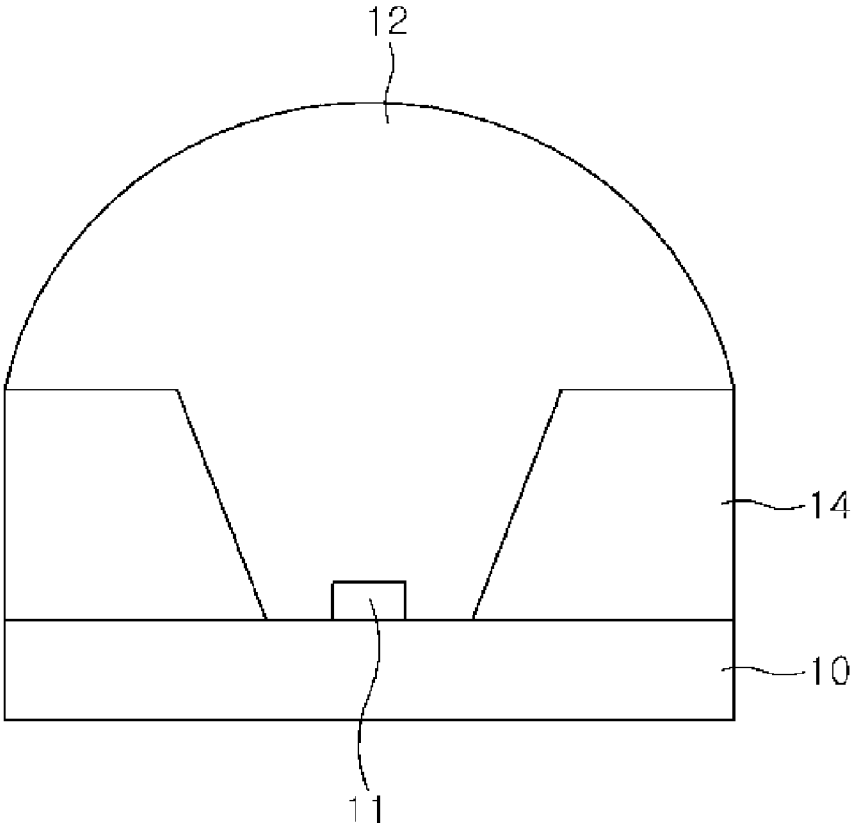

[Fig. 3]

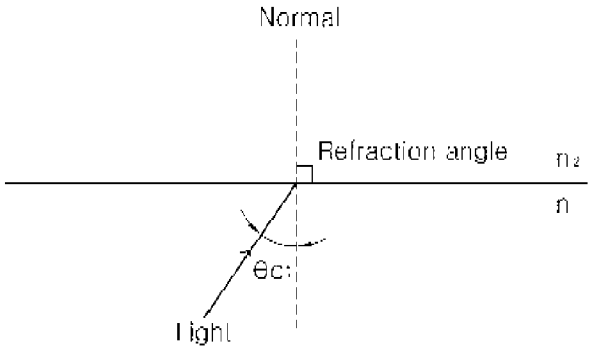
Normal
Refraction angle
n2
n
θc1
Light

(a)

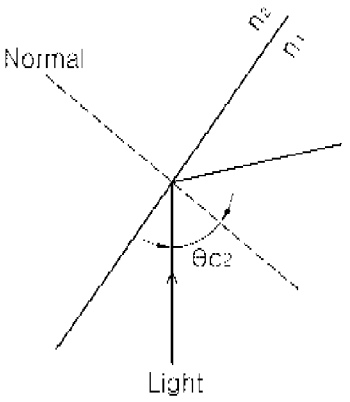
Normal
n2
n1
θc2
Light

(b)

[Fig. 4]

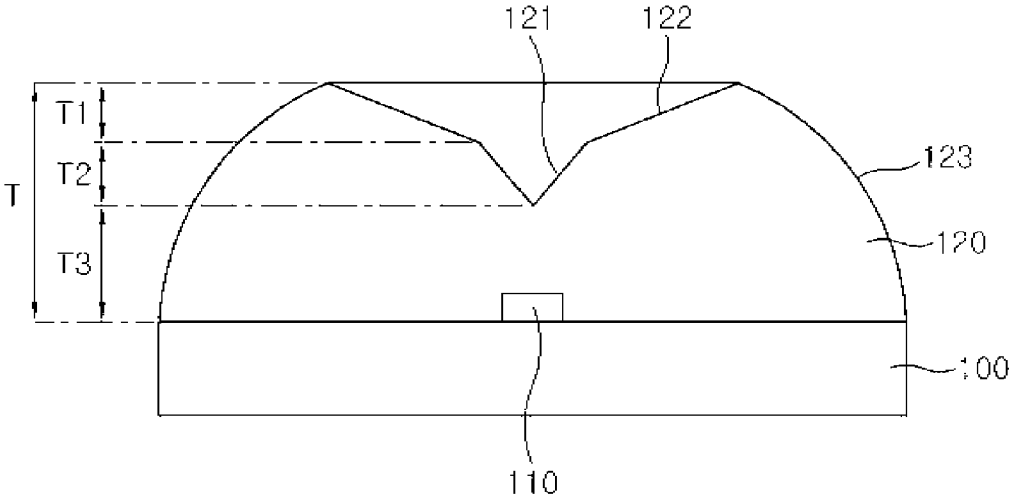
121
122
T1
T2
T
T3
123
120
100
110

[Fig. 5]

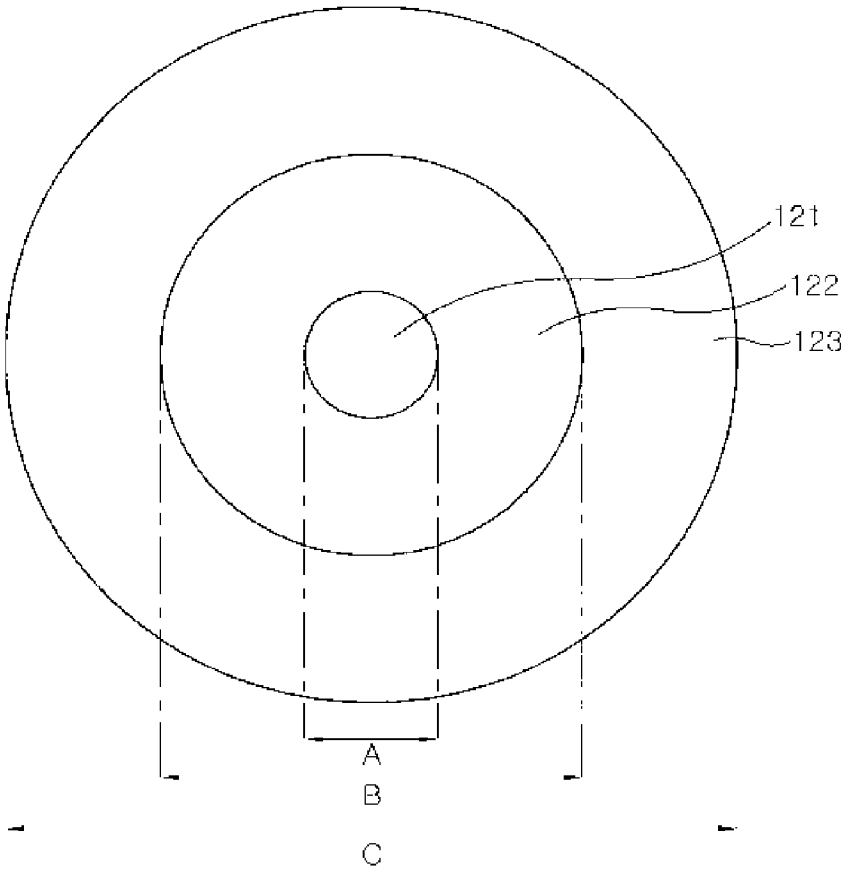

[Fig. 6]

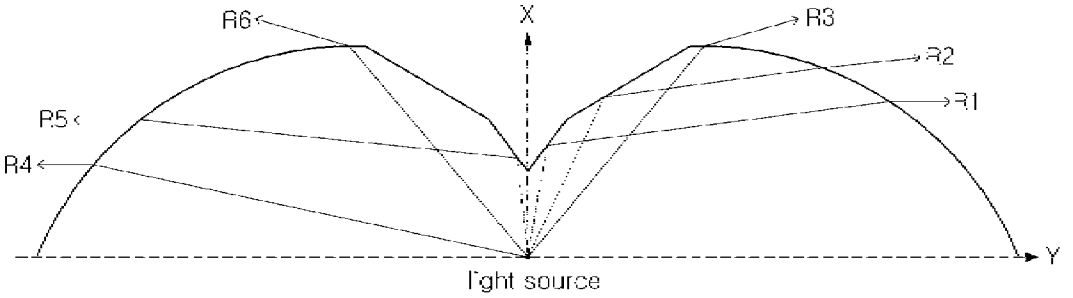

[Fig. 7]

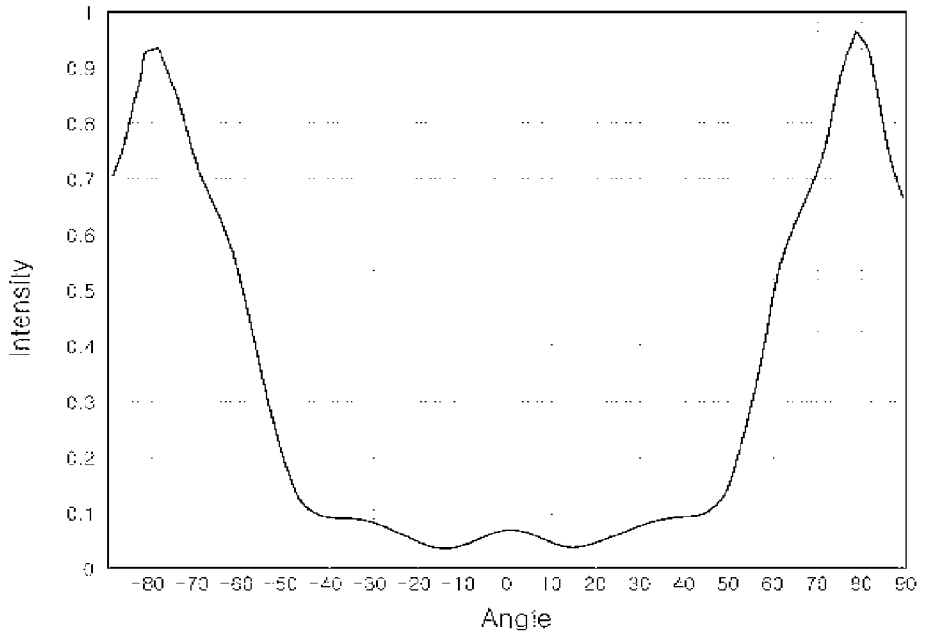

[Fig. 8]

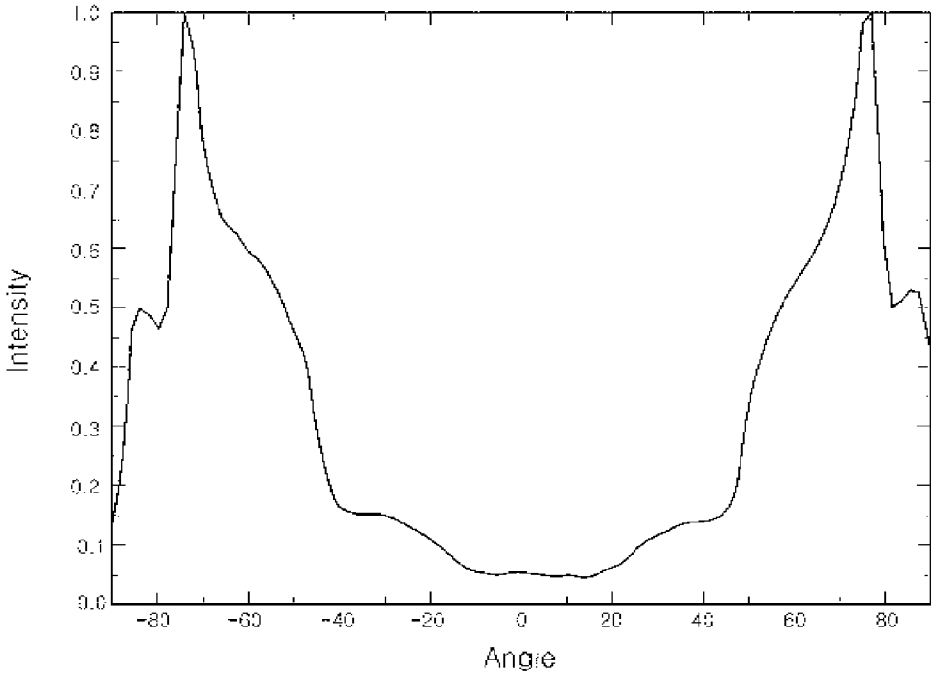

[Fig. 9]

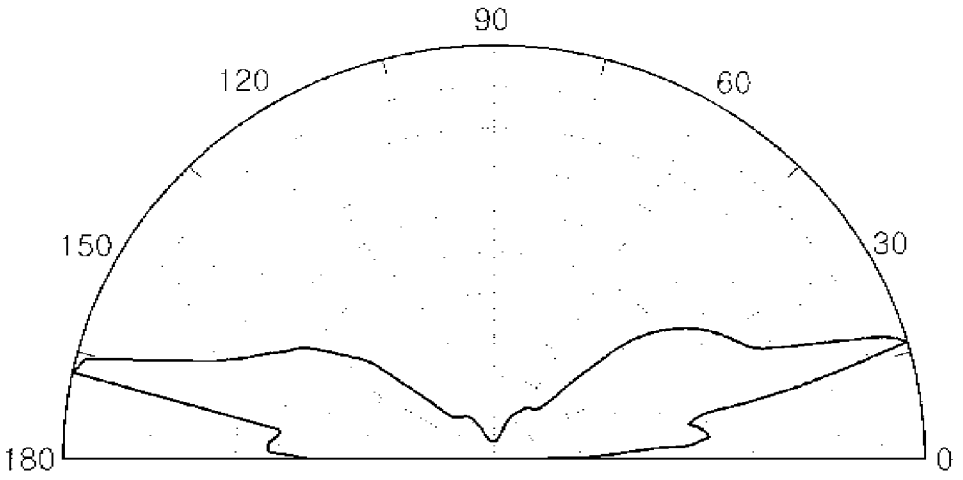

[Fig. 10]

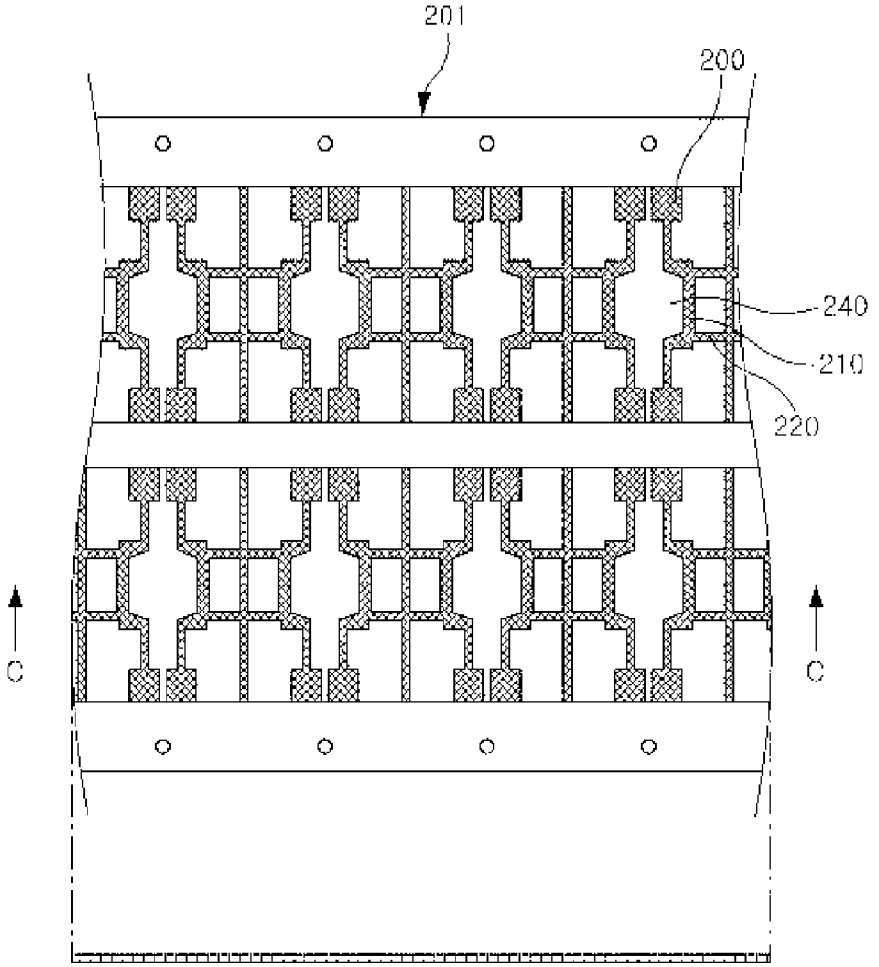

[Fig. 11]

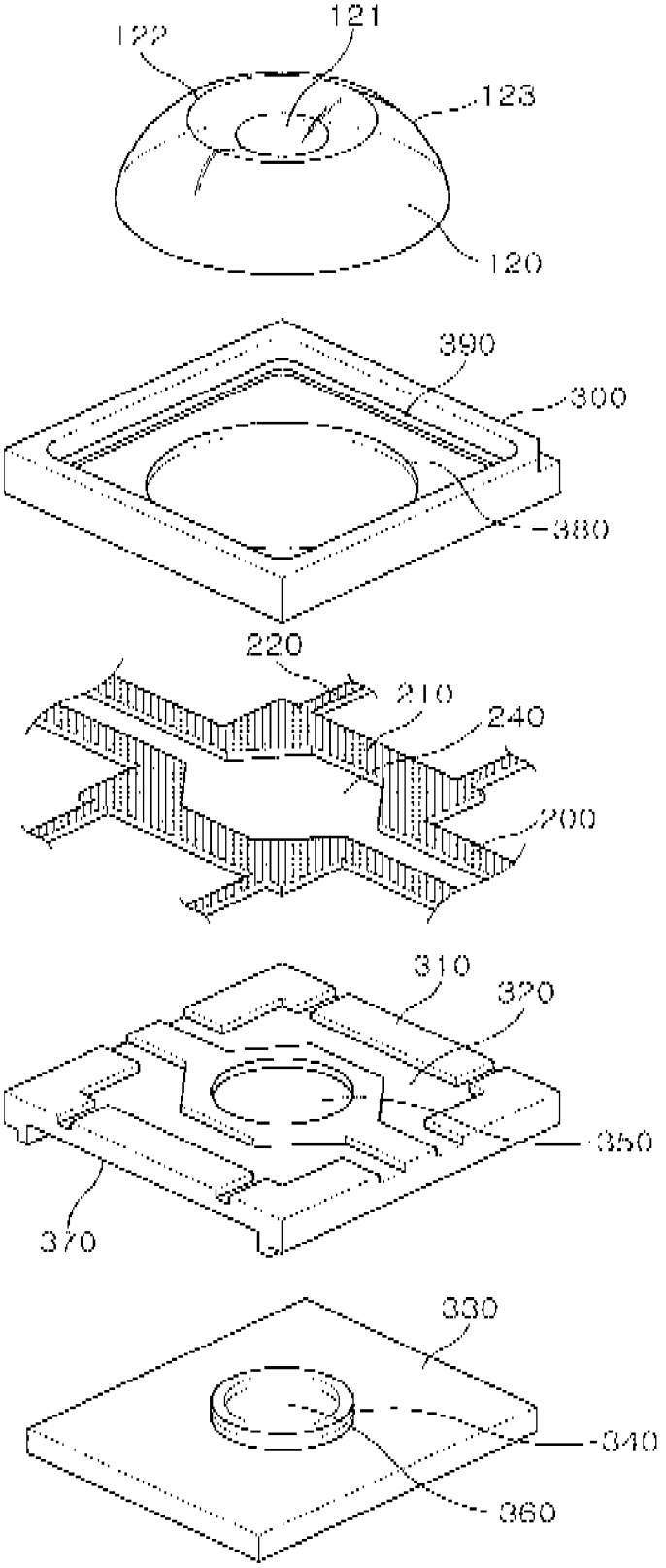
122
121
123
120
390
300
380
220
210
240
200
310
320
350
370
330
340
360

[Fig. 12]

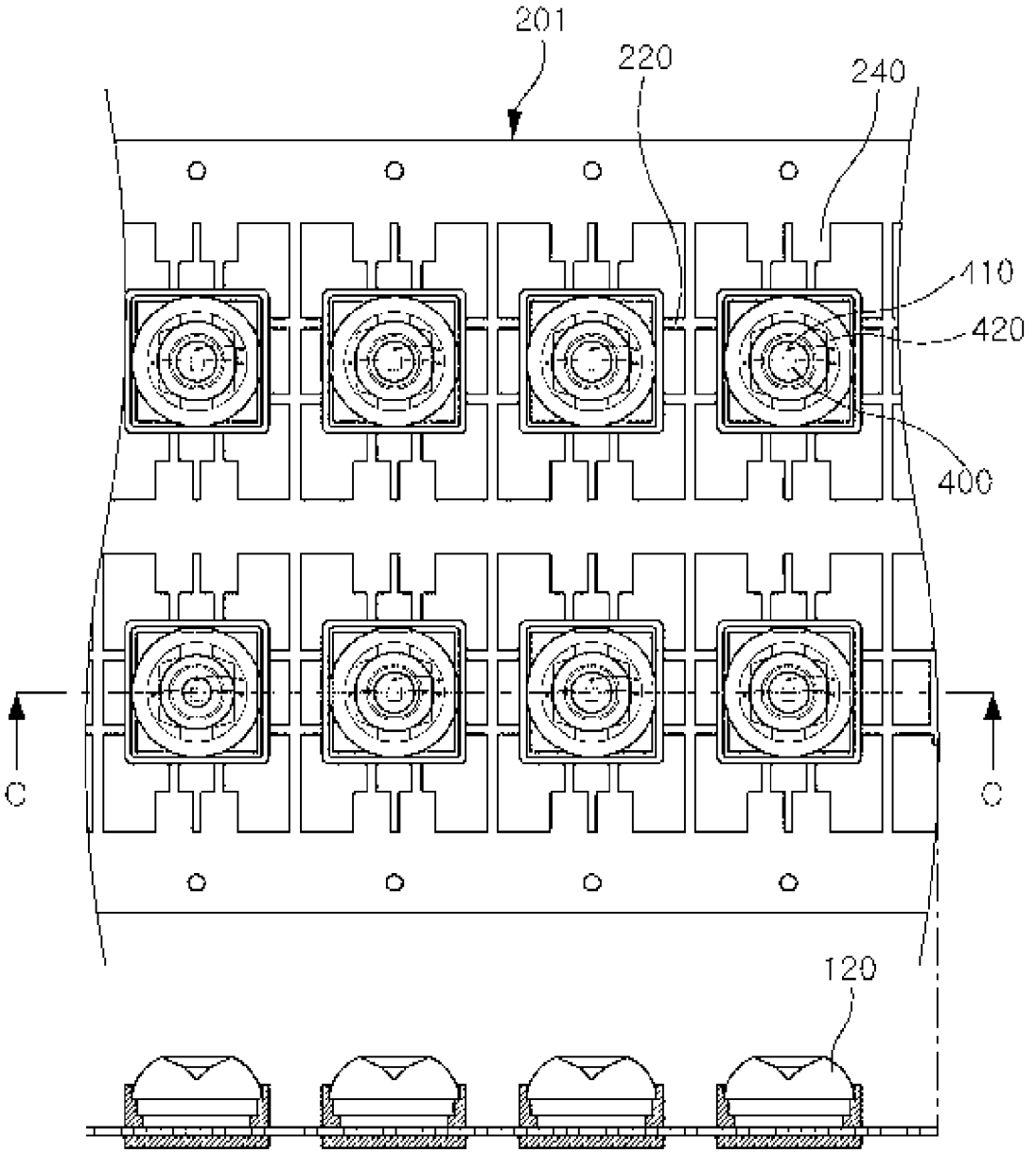

[Fig. 13]

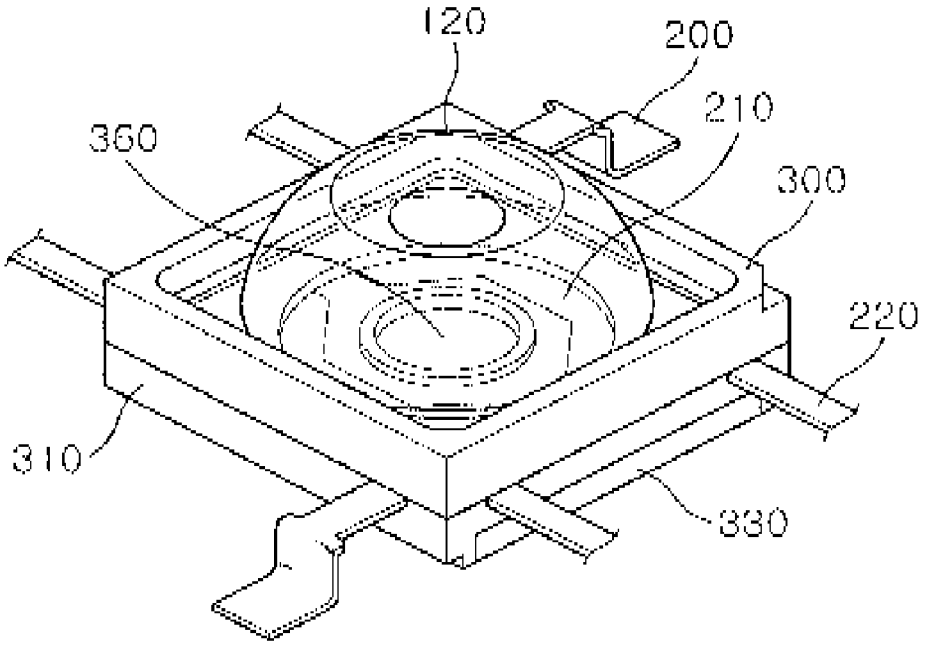

(a)

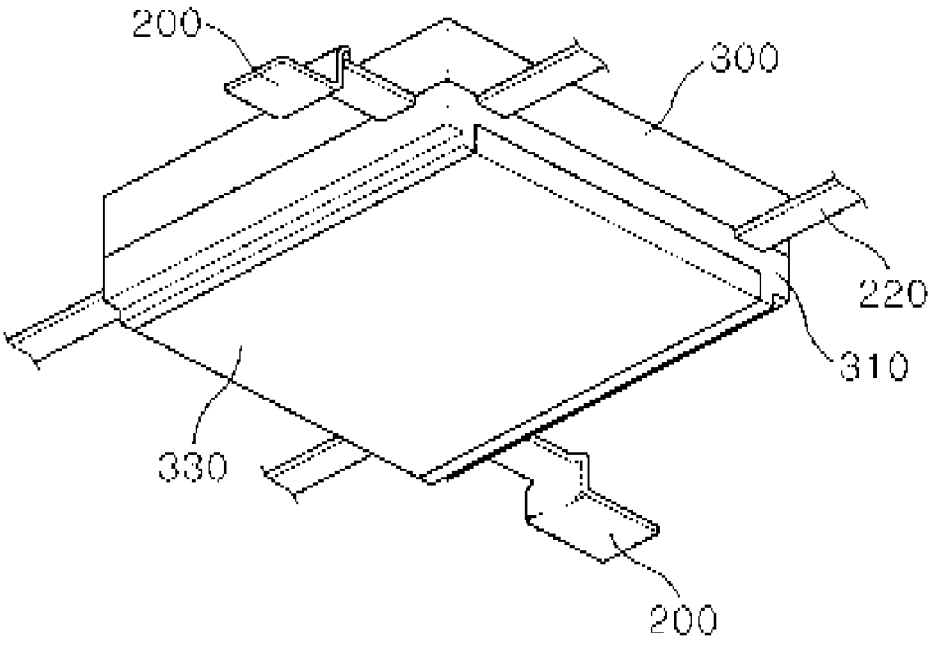

(b)

[Fig. 14]

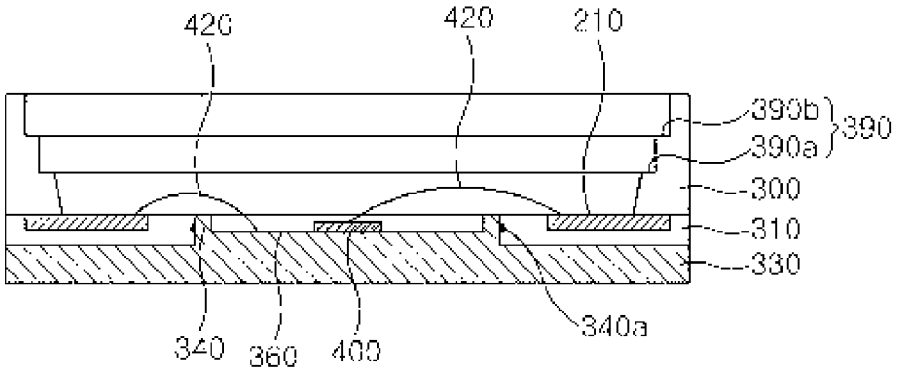
420
420
210
390b
390a
390
300
310
330
340
360
400
340a

(a)

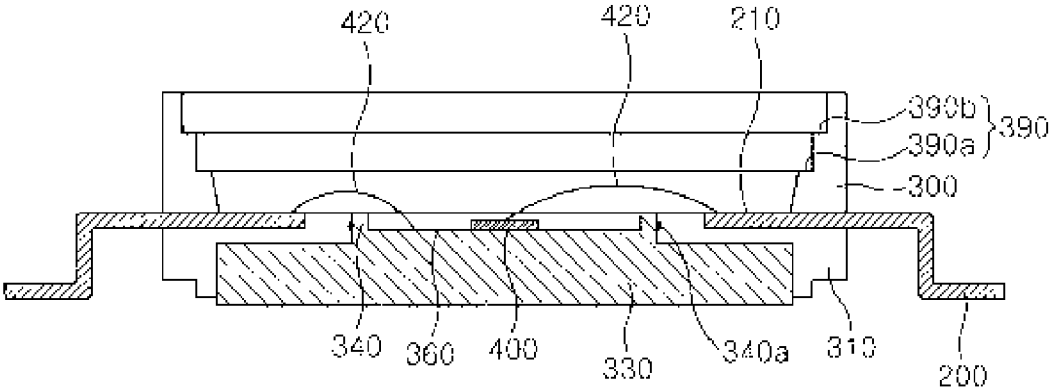
420
420
210
390b
390a
390
300
340
360
400
330
340a
310
200

(b)

[Fig. 15]

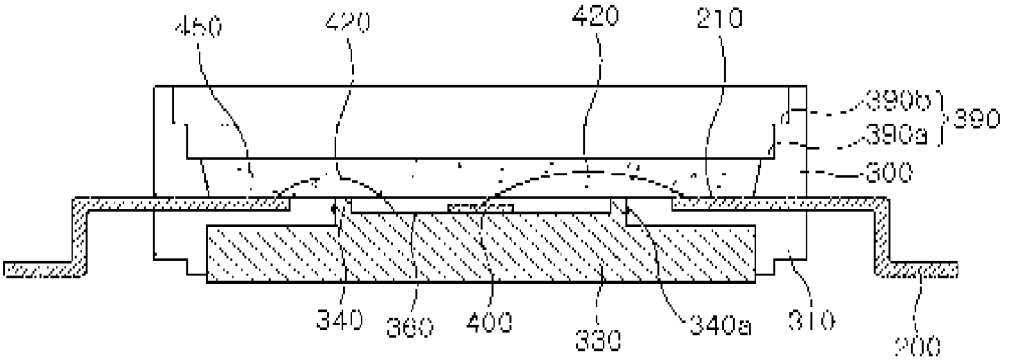
450
420
420
210
390b
390a
390
300
340
360
400
330
340a
310
200

(a)

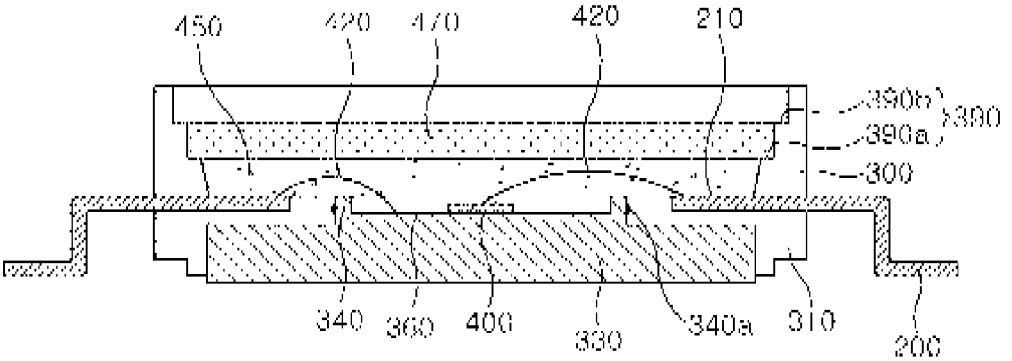
450
420
470
420
210
390b
390a
390
300
340
360
400
330
340a
310
200

(b)

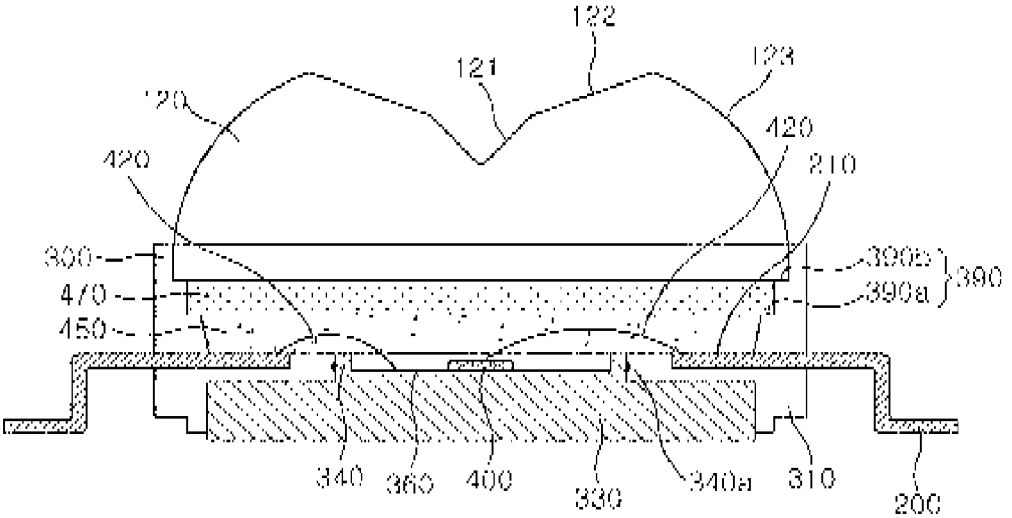
122
121
123
120
420
420
210
300
470
450
390b
390a
390
340
360
400
330
340a
310
200

(c)

[Fig. 16]

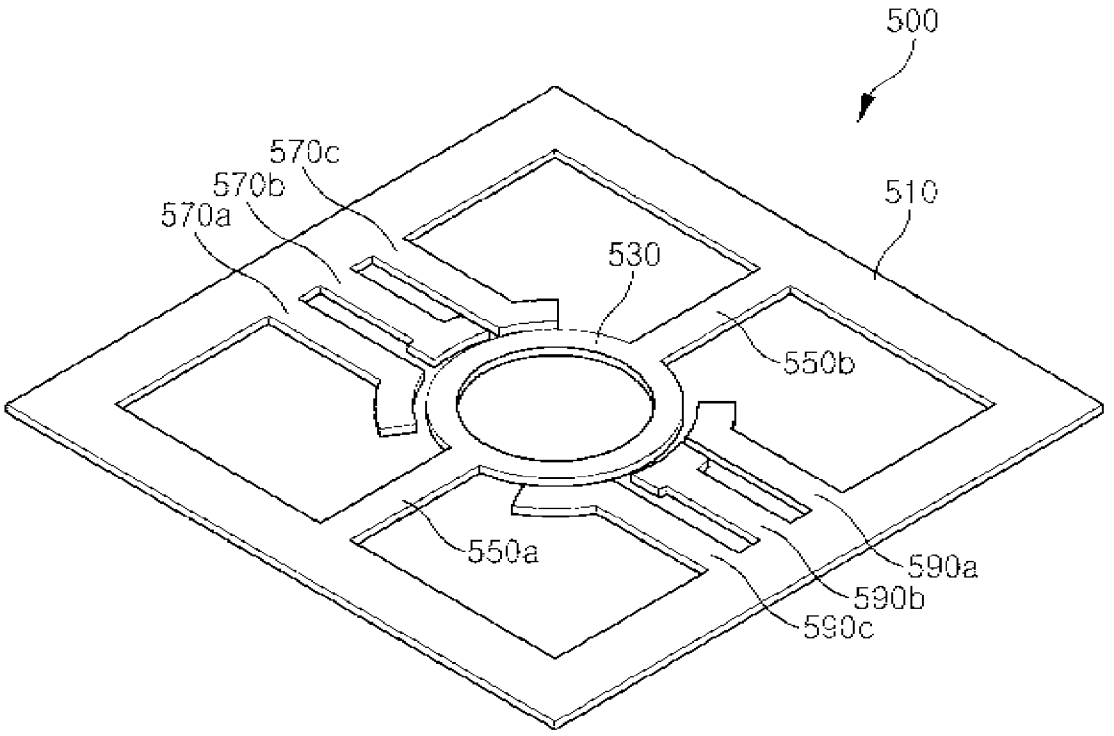

[Fig. 17]

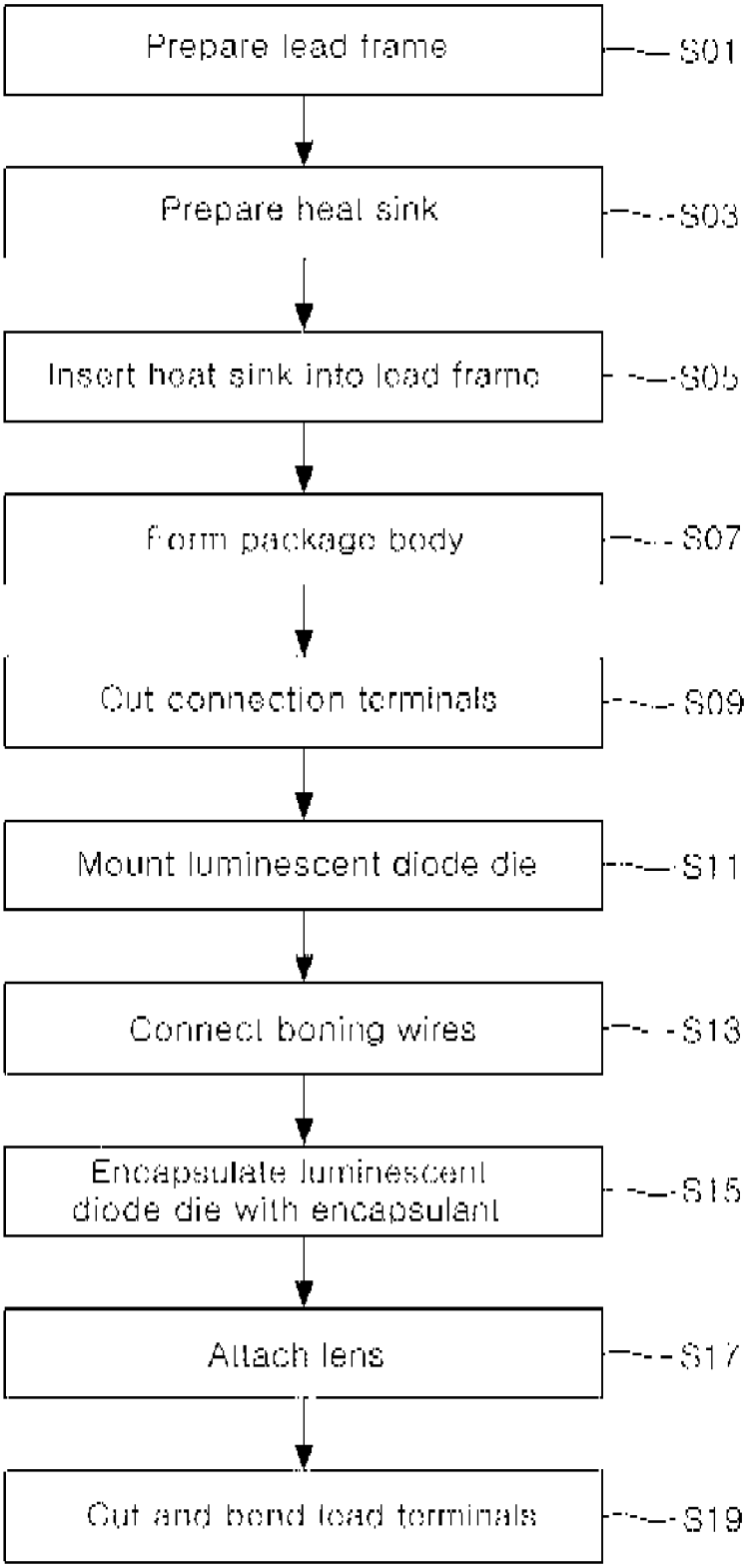
Prepare lead frame
S01
Prepare heat sink
S03
Insert heat sink into lead frame
S05
Form package body
S07
Cut connection terminals
S09
Mount luminescent diode die
S11
Connect boning wires
S13
Encapsulate luminescent diode die with encapsulant
S15
Attach lens
S17
Cut and bend lead terminals
S19

[Fig. 18]

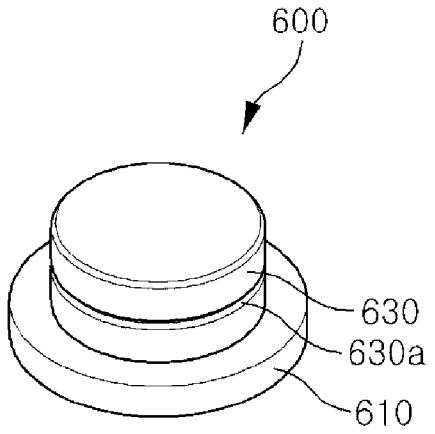
600
630
630a
610

[Fig. 19]

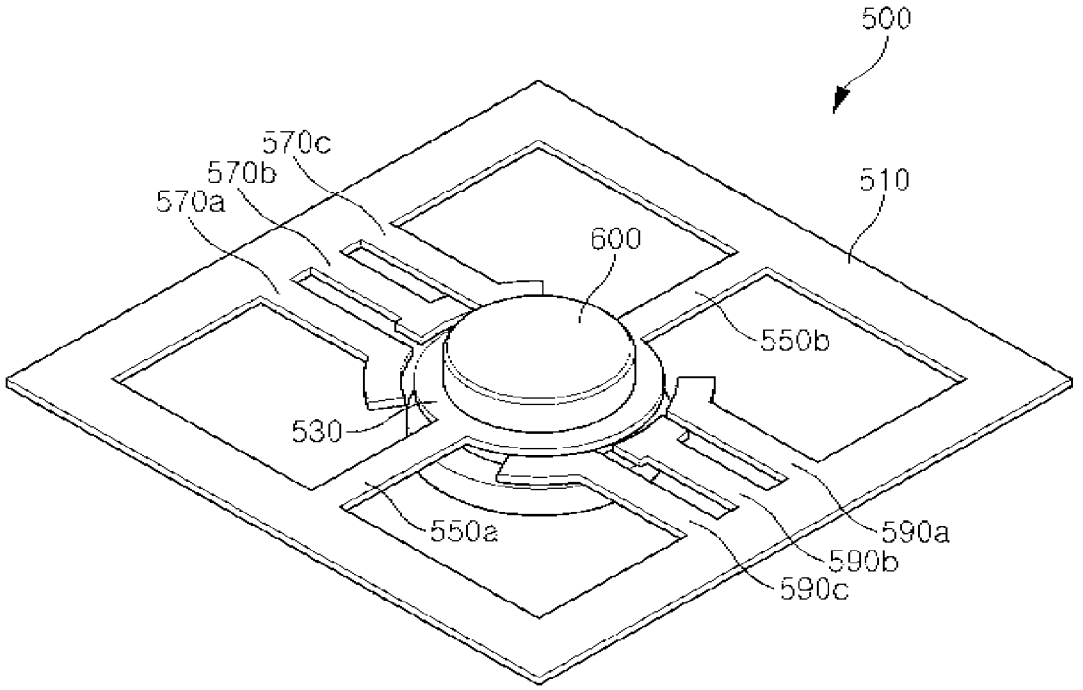
500
510
570c
570b
570a
600
550b
530
550a
590a
590b
590c

[Fig. 20]

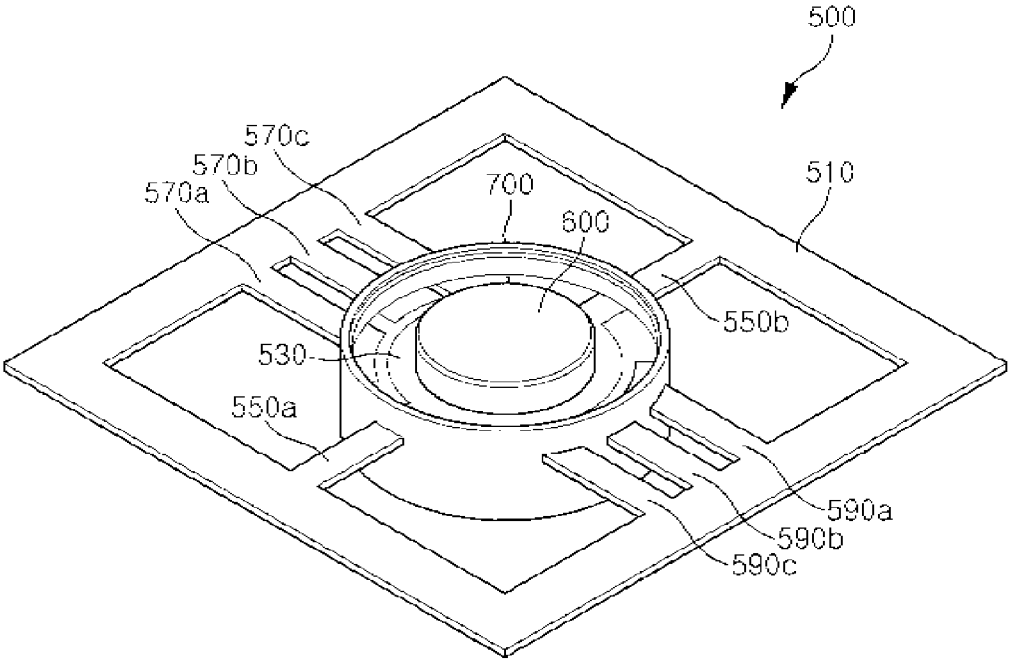
500
510
570c
570b
570a
700
600
550b
530
550a
590a
590b
590c

[Fig. 21]

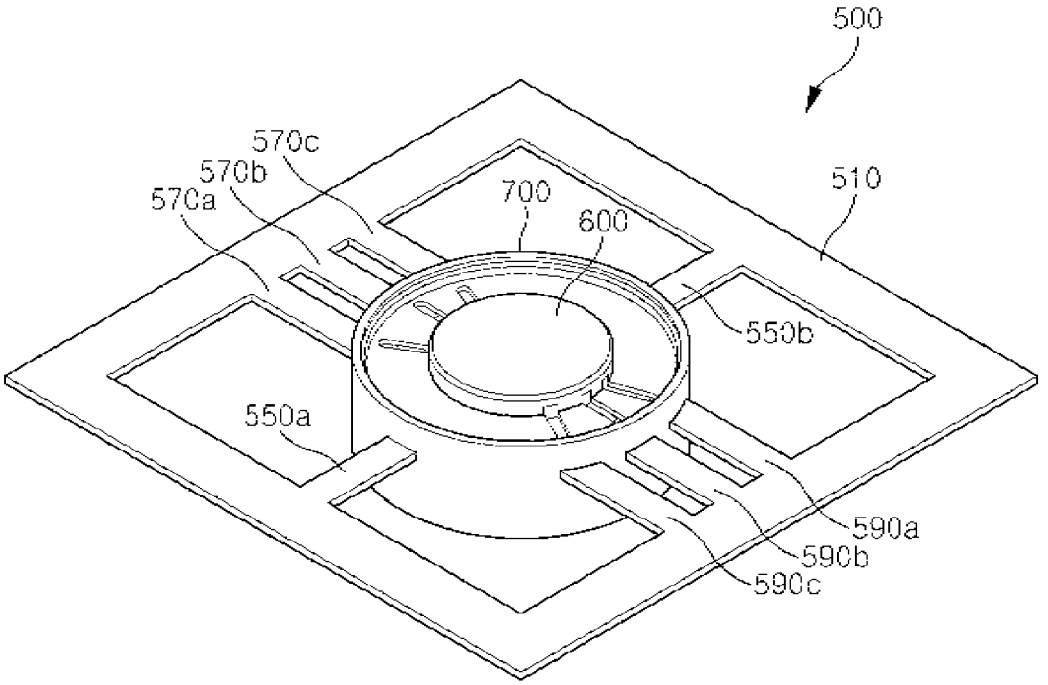
500
510
570c
570b
570a
700
600
550b
550a
590a
590b
590c

[Fig. 22]

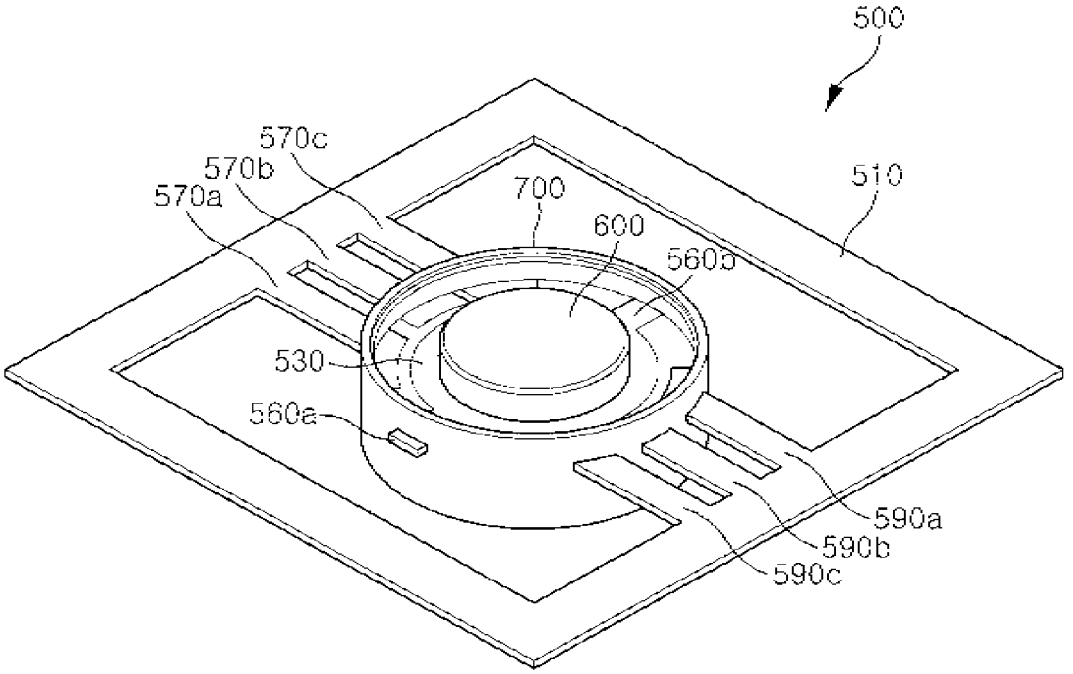
500
510
570c
570b
570a
700
600
560b
530
560a
590a
590b
590c

[Fig. 23]

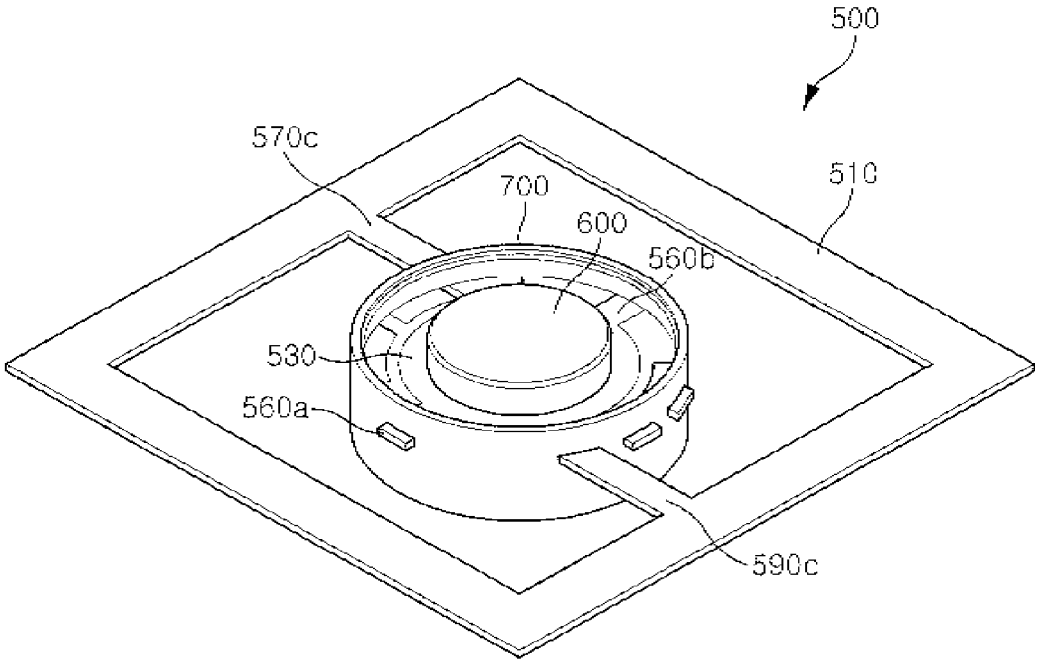
500
510
570c
700
600
560b
530
560a
590c

[Fig. 26]

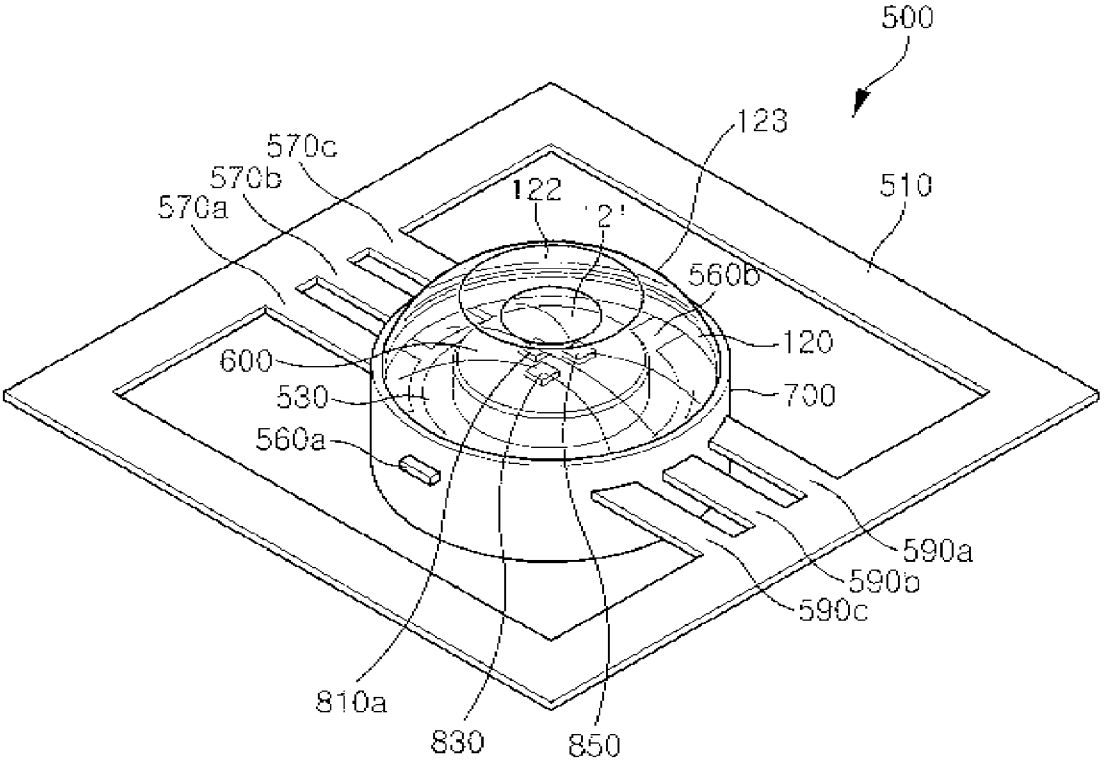
500
123
570c
570b
570a
122
'2'
510
560b
120
600
530
700
560a
590a
590b
590c
810a
830
850

[Fig. 27]

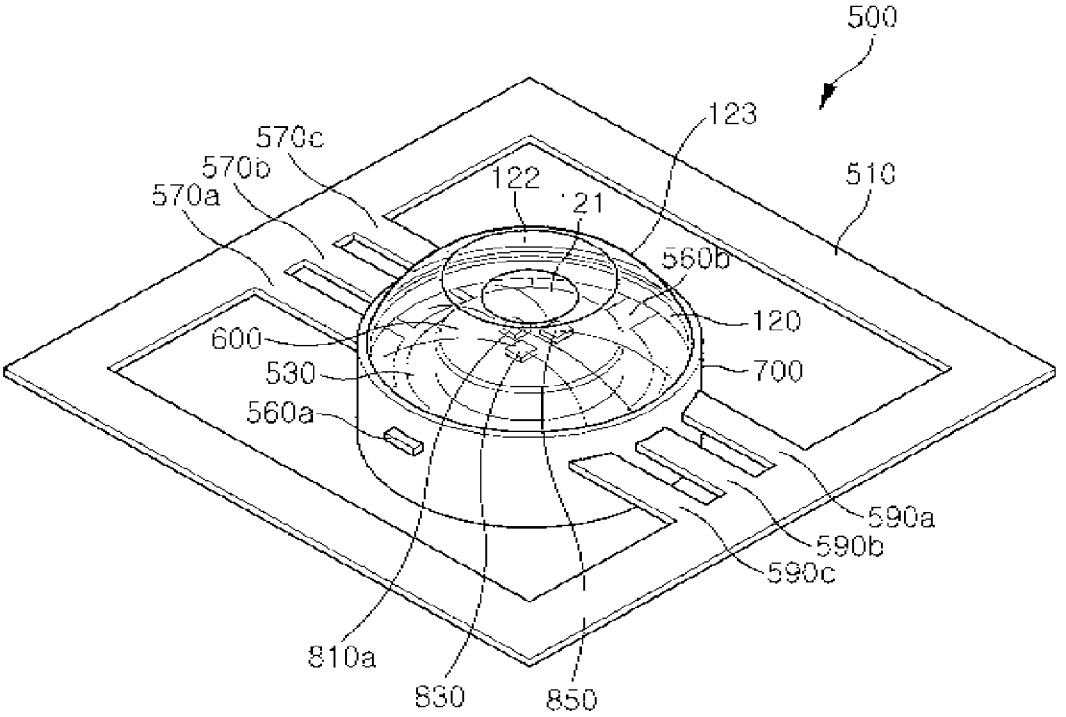
500
123
570c
570b
570a
122
'21
510
560b
120
600
530
700
560a
590a
590b
590c
810a
830
850

[Fig. 26]

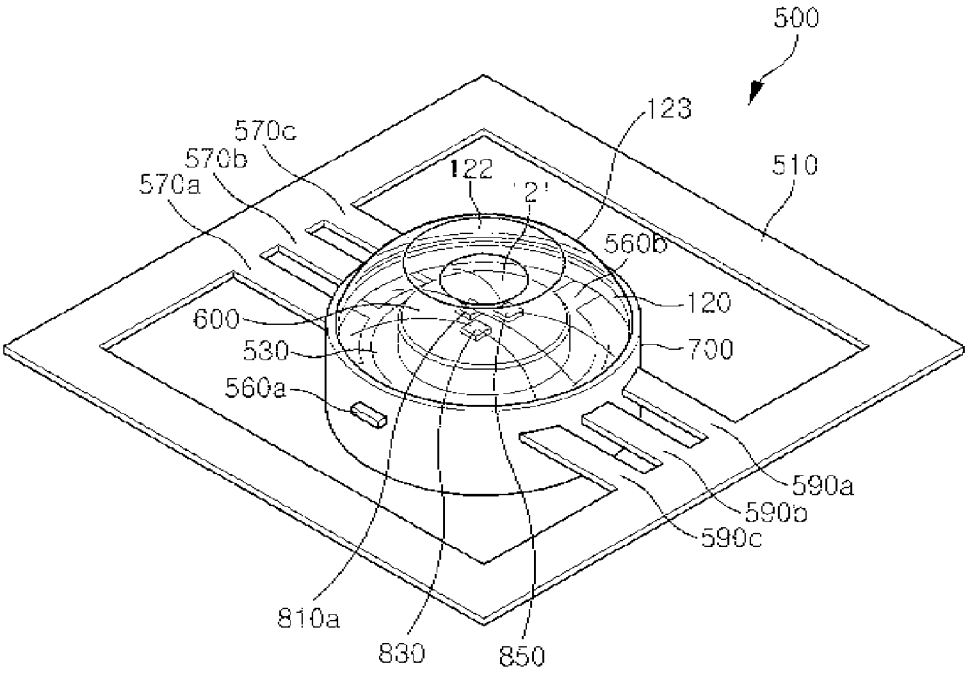
500
123
570c
570b
570a
122
'2'
510
560b
120
600
530
700
560a
590a
590b
590c
810a
830
850

[Fig. 27]

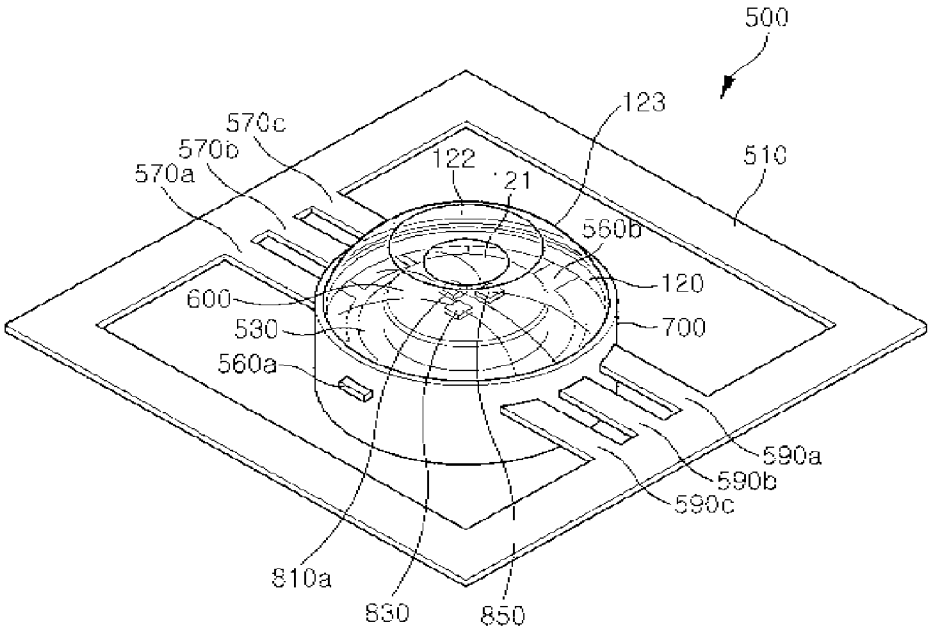
500
123
570c
570b
570a
122
'21
510
560b
120
600
530
700
560a
590a
590b
590c
810a
830
850

[Fig. 28]

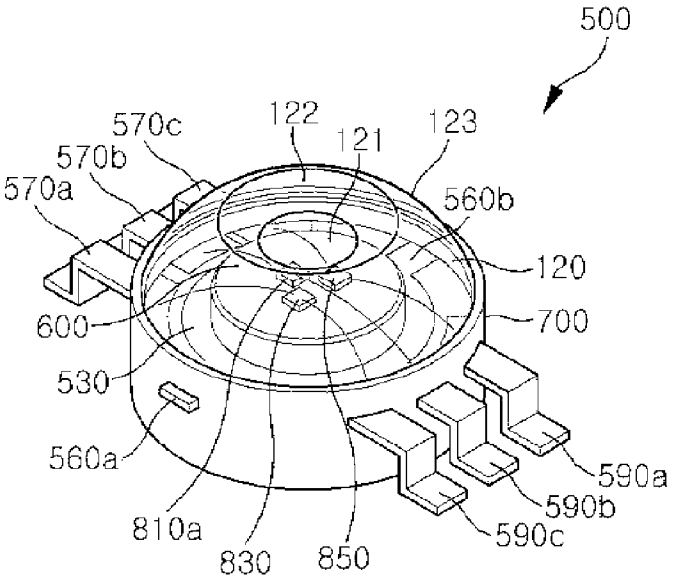

[Fig. 29]

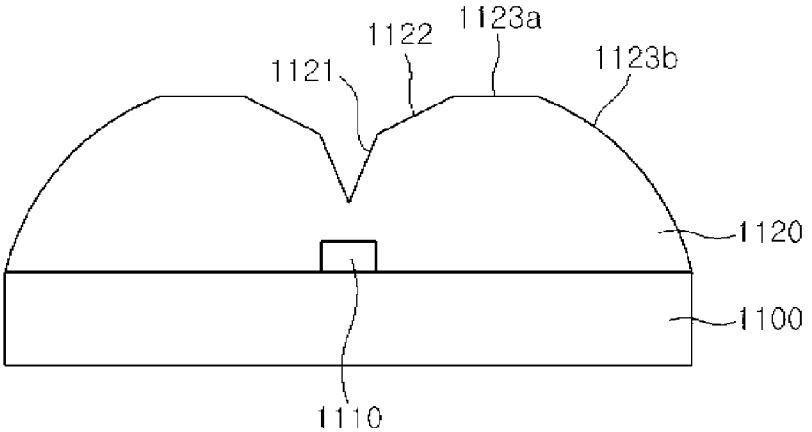

[Fig. 30]

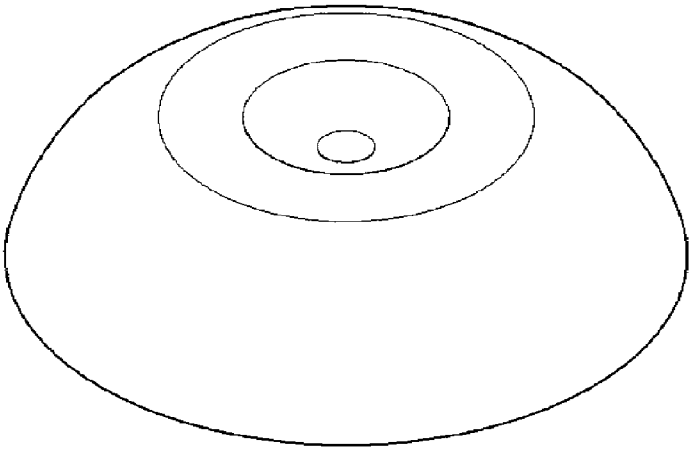

[Fig. 31]

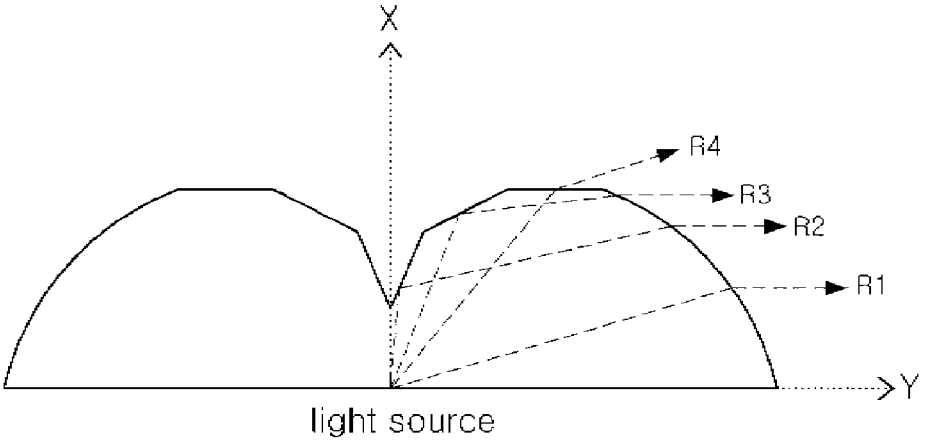
X
R4
R3
R2
R1
Y
light source

[Fig. 32]

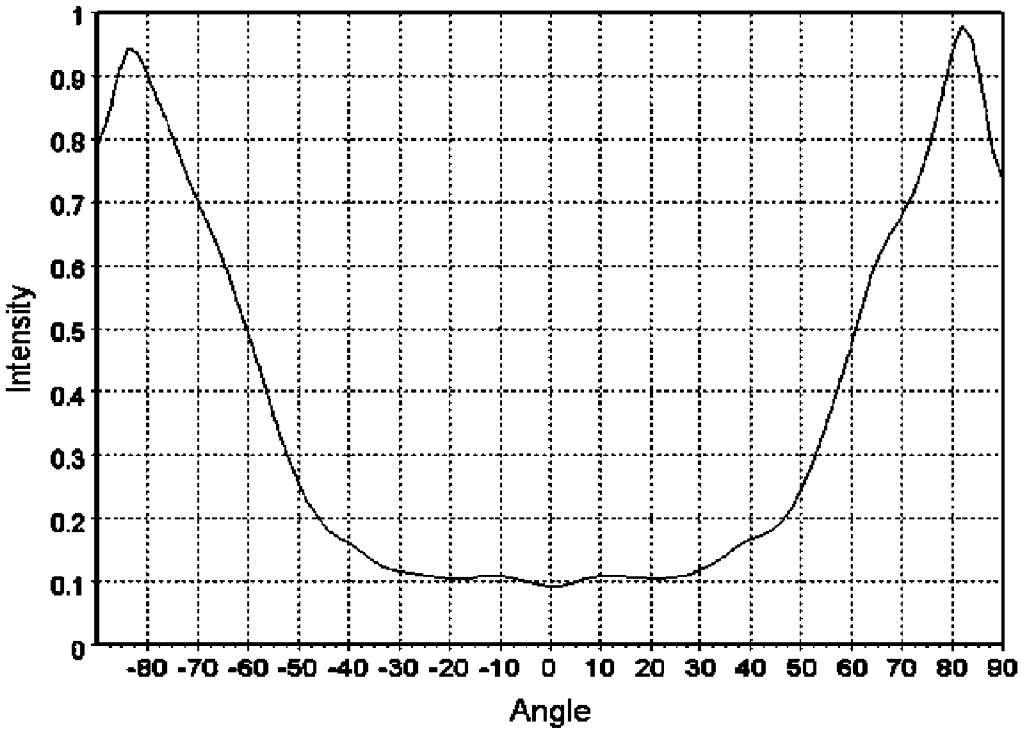
Intensity
1
0.9
0.8
0.7
0.6
0.5
0.4
0.3
0.2
0.1
0
-80 -70 -60 -50 -40 -30 -20 -10 0 10 20 30 40 50 60 70 80 90
Angle

[Fig. 33]

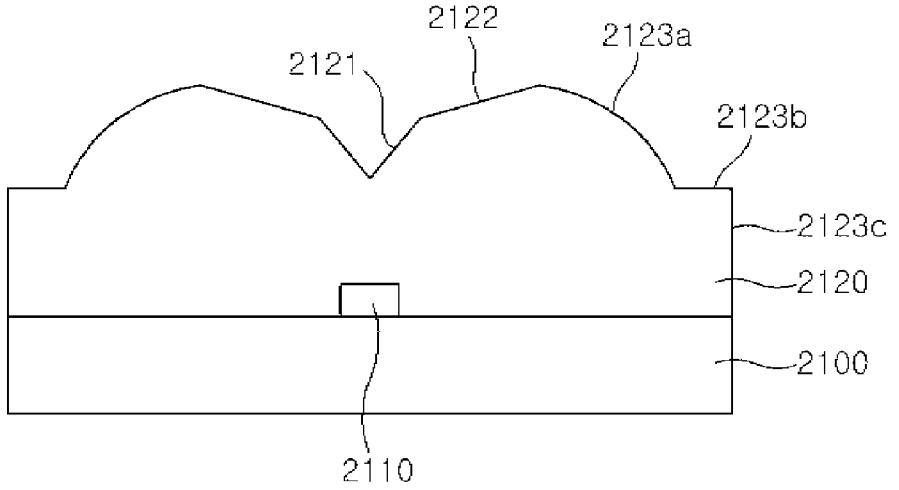

[Fig. 34]

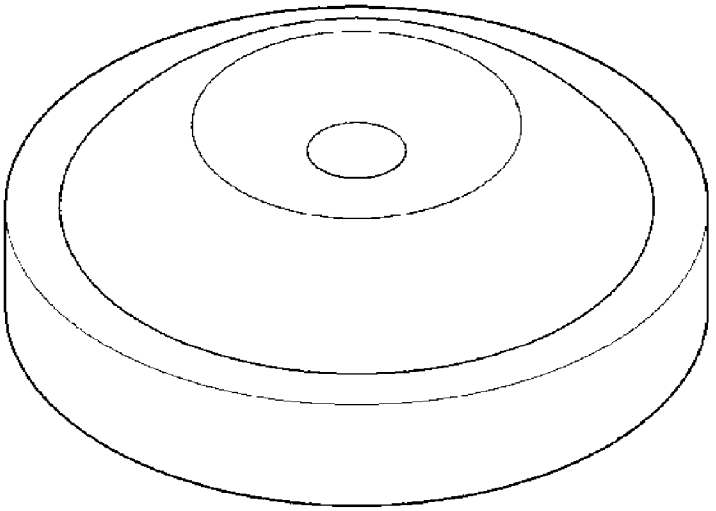

[Fig. 35]

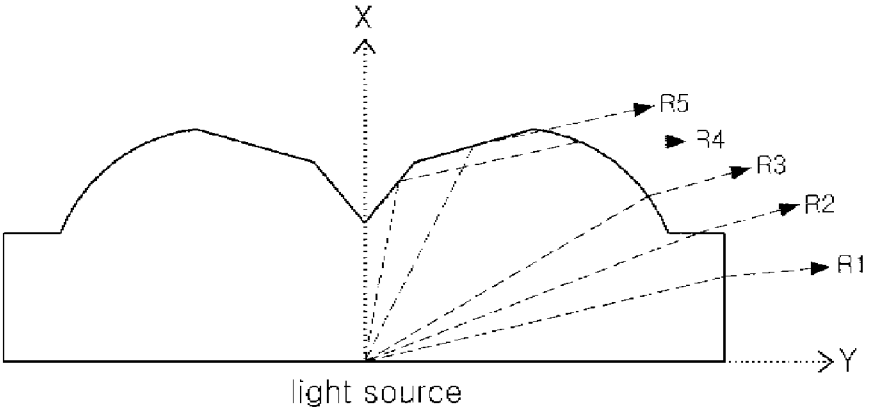

[Fig. 36]

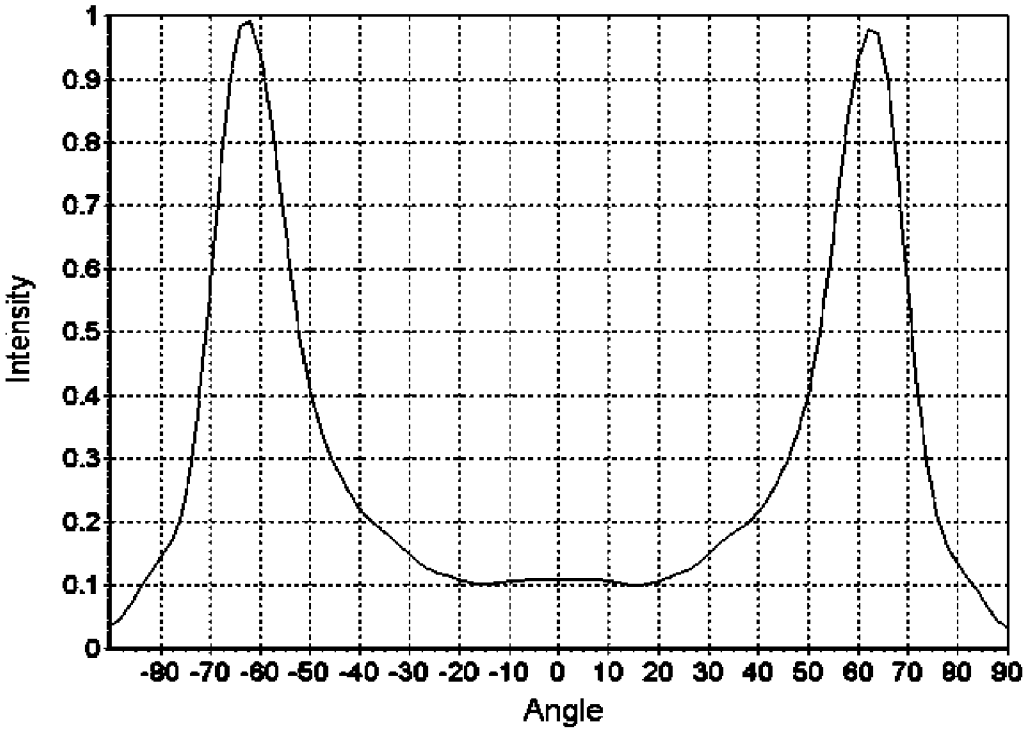
Intensity
1
0.9
0.8
0.7
0.6
0.5
0.4
0.3
0.2
0.1
0
-90 -70 -60 -50 -40 -30 -20 -10 0 10 20 30 40 50 60 70 80 90
Angle

[Fig. 37]

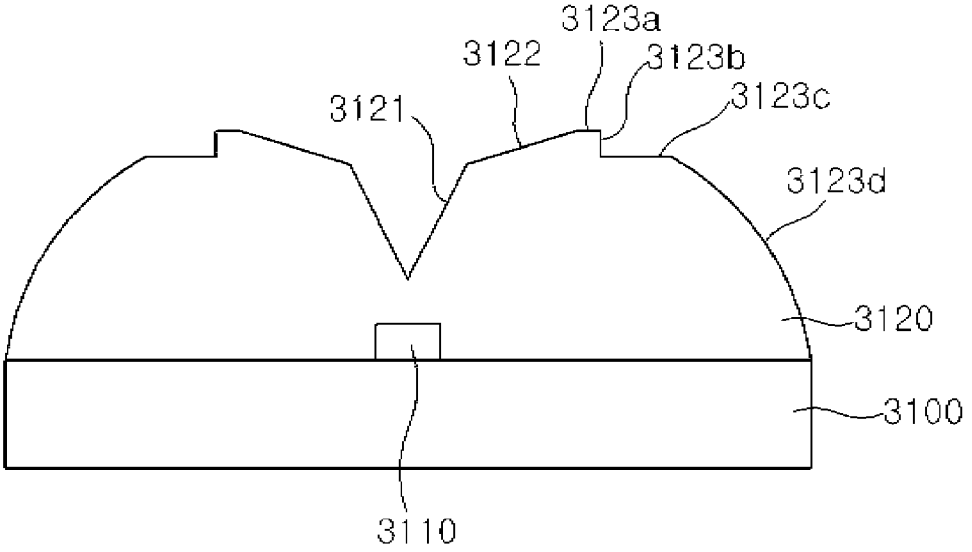
3123a
3122
3123b
3121
3123c
3123d
3120
3100
3110

[Fig. 38]

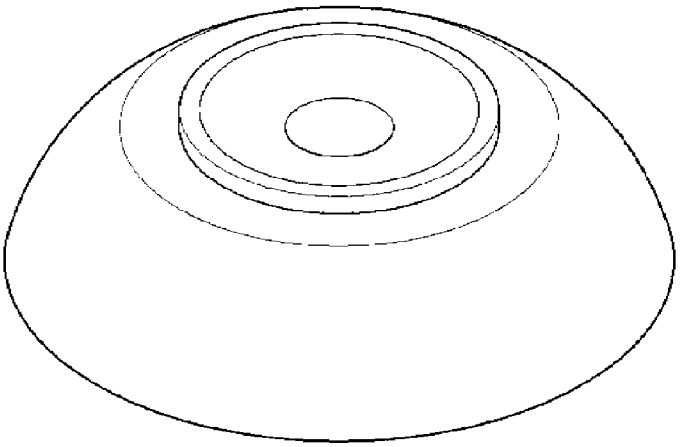

[Fig. 39]

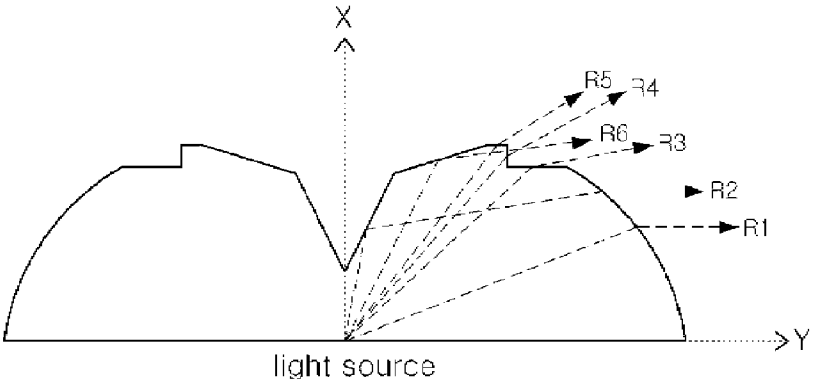

[Fig. 40]

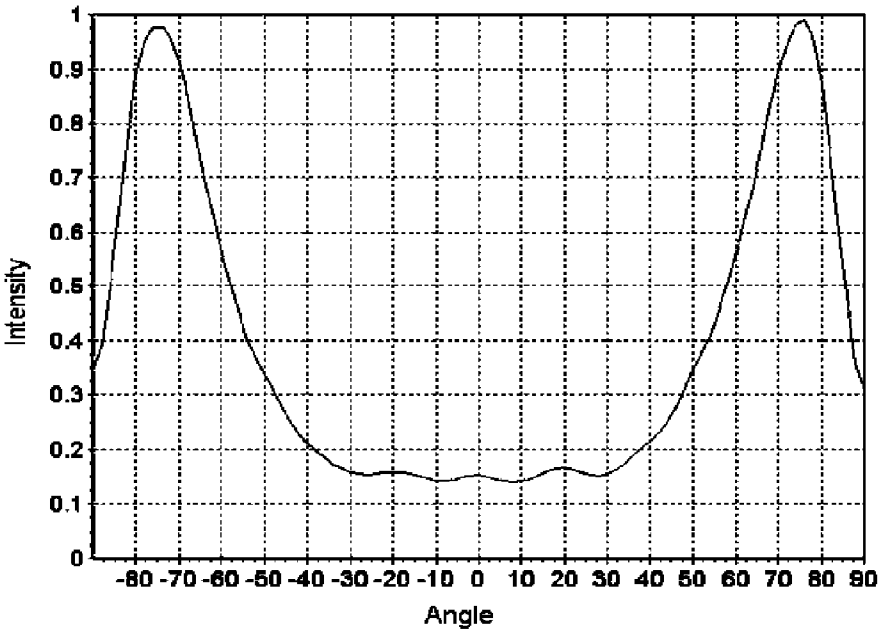

[Fig. 41]

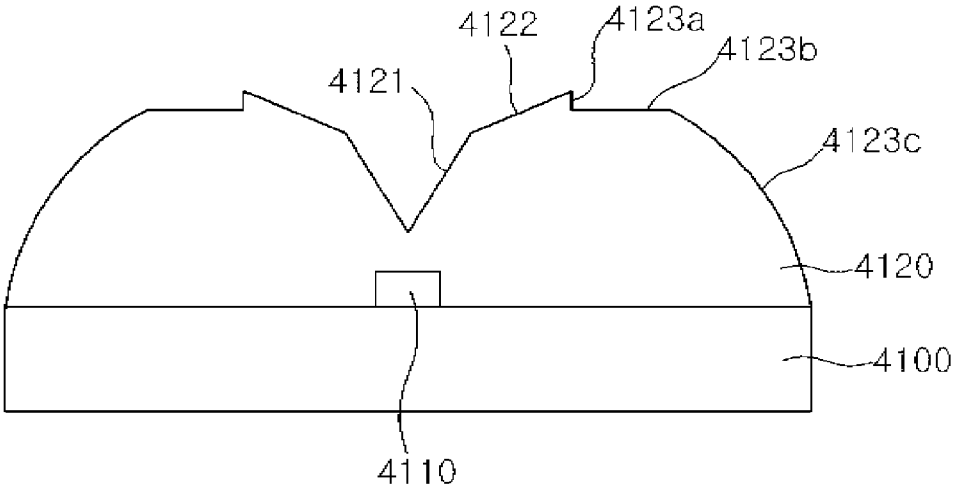

[Fig. 42]

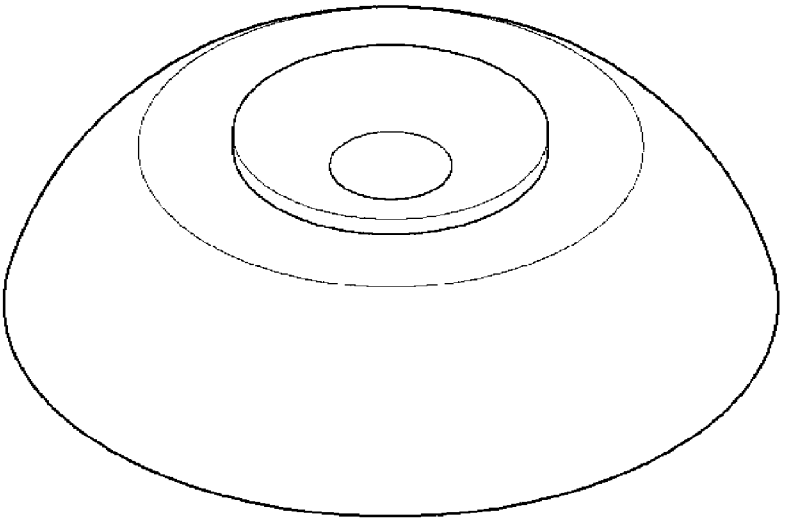

[Fig. 43]

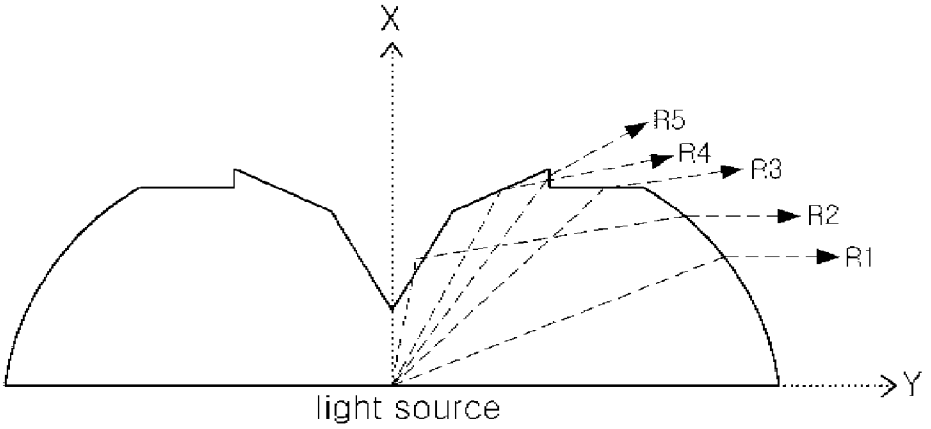

[Fig. 44]

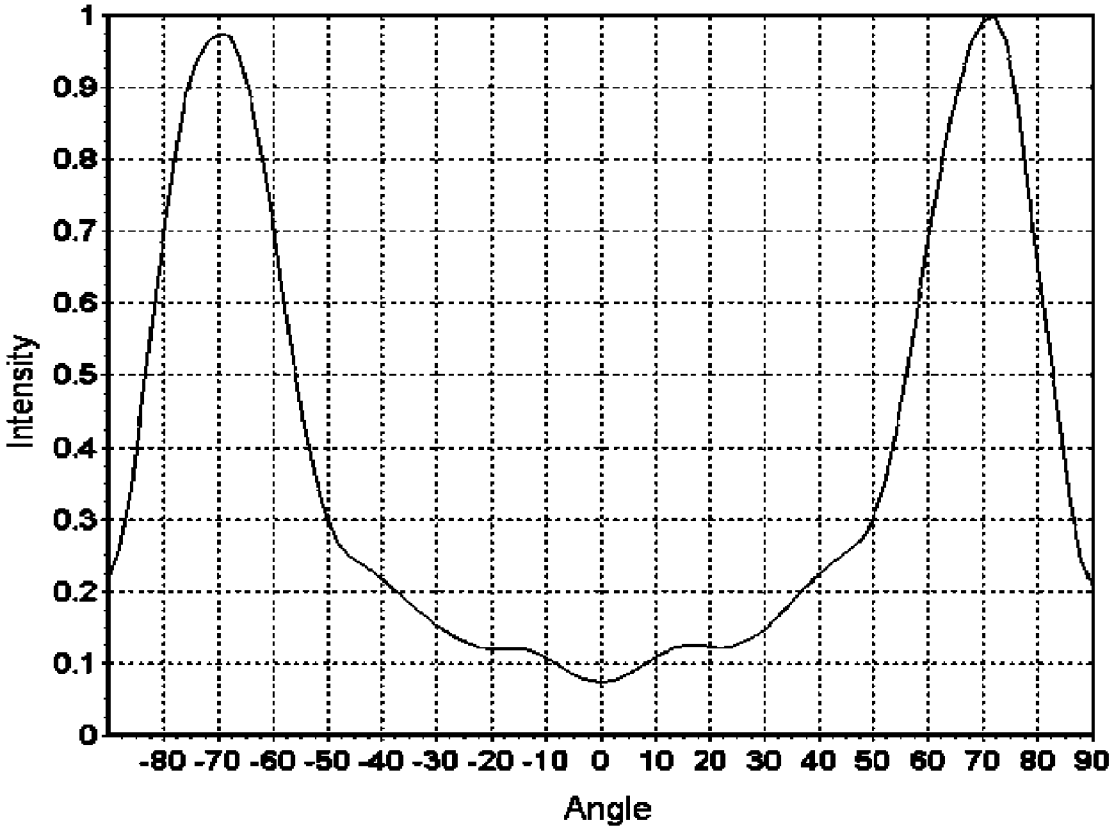
Intensity
1
0.9
0.8
0.7
0.6
0.5
0.4
0.3
0.2
0.1
0
-80 -70 -60 -50 -40 -30 -20 -10 0 10 20 30 40 50 60 70 80 90
Angle

SIDE ILLUMINATION LENS AND LUMINESCENT DEVICE USING THE SAME

TECHNICAL FIELD

The present invention relates to a side illumination lens and a luminescent device using the same, and more particularly, to a side illumination lens utilizing total internal reflection and a luminescent device using the lens.

BACKGROUND ART

In general, a light emitting diode (LED) is a device utilizing a phenomenon in which minority carriers (electrons or holes) injected by means of a p-n junction structure of a semiconductor are produced, and light is emitted due to recombination of the carriers. Conventionally, colors of light emitted by a light emitting diode are only red and green, and thus, the conventional light emitting diode has its use limited to a display device.

With the development of technology, however, light emission is allowed in various ranges of wavelength, in addition to blue light emission. Thus, a light emitting diode has begun to be used in a variety of fields. In particular, as white light emission is realized, the use of the light emitting diode is expanded to an illumination device as well as a backlight for a liquid crystal display.

However, since the direction of light emitted by a light emitting diode is random, the light should be induced in a desired direction to be used as an illumination device and a backlight. To induce light in the prior art, as shown in FIG. **1**, a luminescent chip **11** is mounted on a substrate **10**, molding is performed to form a convex lens **12** over the luminescent chip **11**, and a pattern **13** for diffused reflection is formed on the surface of the convex lens **12** so that light can be spread widely. As shown in FIG. **2**, reflection cups **14** are formed at both sides of the luminescent chip **11** to enhance focusing of light. Since the aforementioned luminescent device mainly emits light forward rather than sideward, there is a problem in that it is difficult to apply the luminescent device to a backlight which should widely emit light sideward.

Accordingly, studies on development of a device capable of emitting light in side directions of a lens have been actively conducted using the total internal reflection (TIR) property of light. Conventional lenses using TIR are disclosed in U.S. Pat. Nos. 6,679,621, 6,607,286 and 6,598,998. In the patents, a lens comprises a total reflection surface which is formed on the lens and has a predetermined slope, and a plurality of refractive surfaces which have different slopes and through which light reflected by the total reflection surface is emitted to the outside. Since the conventional lens has the plurality of refractive surfaces formed on right and left sides of the total reflection surface, there is a problem in that a process of fabricating the lens is complicated and fabricating costs increase. That is, there are the following problems: if a lens is fabricated using a mold, upper and lower mold parts and right and left mold parts are required; and if a lens is fabricated by means of a casting or grinding method, it cannot be easily fabricated in view of its shape.

DISCLOSURE OF INVENTION

Technical Problem

Accordingly, the present invention is conceived to solve the aforementioned problems. An object of the present invention is to provide a side illumination lens, which comprises a total internal reflection surface with a total reflection slope and a linear and/or curved refractive surface(s) extending therefrom, thereby achieving side luminescence, facilitating a fabricating process thereof and reducing fabricating costs, and a luminescent device using the side illumination lens.

Technical Solution

The present invention provides a lens comprising a body, a total reflection surface with a total reflection slope with respect to a central axis of the body, and a linear and/or curved refractive surface(s) formed to extend from a periphery of the total reflection surface.

Here, the refractive surface may comprise a linear refractive surface formed by being bent at the periphery of the total reflection surface, and a curved refractive surface formed to extend from a periphery of the linear refractive surface. Alternatively, the refractive surface may comprise a curved refractive surface formed to extend from the periphery of the total reflection surface, and a linear refractive surface formed by being bent at a periphery of the curved refractive surface.

Preferably, the curved refractive surface takes the shape of an ellipse, and a ratio of minor and major axes of the ellipse is 1:4 or less. The linear refractive surface may be bent more than once.

The total reflection surface may comprise a first total reflection surface having a section in the form of a V-shaped recess with a predetermined slope, and a second total reflection surface extending upward from a periphery of the first total reflection surface and formed to be sloped with a gradient smaller than that of the first total reflection surface.

The refractive index of the body may be 1.2 to 2.0.

The present invention provides a luminescent device comprising a package housing with an opening and a through-hole exposed by the opening; a lead terminal having an inner portion exposed within the opening of the package housing and an outer portion extending from the inner portion and protruding to the outside of the package housing; a heat sink coupled to a lower portion of the package housing and having a portion exposed through the opening; and a lens including a total reflection surface encapsulating the package housing and having a total reflection slope, and a refractive surface formed to extend from a periphery of the total reflection surface.

Here, the package housing may comprise first and second housings mutually coupled to each other with the lead terminal interposed therebetween, and the opening may be formed in the first housing.

The heat sink may comprise a heat sink body corresponding to a bottom surface of the package housing, and an insertion projection protruding upward from a central portion of the heat sink body and inserted into the through-hole of the package housing. At this time, the heat sink may have a coupling projection on at least one side of the heat sink body and the insertion projection.

The present invention provides a luminescent device comprising a heat sink support ring; a heat sink inserted into the support ring; at least two lead terminals arranged at both sides of the support ring while being spaced apart from the support ring and the heat sink; a package body that molds and supports the heat sink and the lead terminals, and has an opening through which an upper portion of the heat sink and portions of the lead terminals are exposed; and a lens including a total reflection surface encapsulating the package body and having a total reflection slope, and a refractive surface formed to extend from a periphery edge of the total reflection surface.

Here, the heat sink may have a base and a projection protruding upward from the base at the center thereof, and the projection is inserted into the support ring.

The heat sink may further comprise a support ring-receiving groove in a side surface of the projection so that the support ring-receiving groove can be fastened to the support ring. The package body may be a plastic resin body formed by insert-molding a thermosetting or thermoplastic resin after the heat sink is inserted into the support ring.

ADVANTAGEOUS EFFECTS

As described above, according to the present invention, a lens with total internal reflection surfaces with different slopes, and a linear and/or curved refractive surface(s) allows light emitted forward from a luminescent chip to be guided to a side of the lens.

Further, a linear surface(s) formed in a direction perpendicular or parallel to a central axis of a lens and a curved surface are formed on an edge of the lens so that a process of fabricating the lens is facilitated, thereby reducing a defective rate and fabrication costs of the lens.

Moreover, it is possible to provide a luminescent device employing a heat sink to exhibit superior heat dissipation property, thereby obtaining high output of light.

Furthermore, after a heat sink is fixed to a frame, a package body can be formed using an insert molding technique, so that a luminescent device with a structure in which lead terminals and the heat sink are mutually coupled to each other can be easily fabricated.

In addition, it is possible to provide a frame that allows a heat sink to be fixed before a package body is formed, so that fabrication of a luminescent device is facilitated.

Further, there is an advantage in that a large quantity of luminescent devices can be mass-produced at a high rate because a method of fabricating the luminescent devices is similar to that of conventional top luminescent devices.

BRIEF DESCRIPTION OF THE DRAWINGS

FIGS. **1** and **2** are sectional views of conventional luminescent devices.

FIG. **3** is a conceptual view illustrating a critical angle.

FIG. **4** is a sectional conceptual view of a luminescent device with a lens according to a first embodiment of the present invention.

FIG. **5** is a plan view of the lens according to the first embodiment.

FIG. **6** is a conceptual view illustrating the operation of the total internal reflection lens according to the first embodiment.

FIG. **7** is a graph showing simulation results of the luminescent device with the lens according to the first embodiment.

FIGS. **8** and **9** are graphs showing experimental measurement results.

FIG. **10** shows plan and side views of an external frame for use in mass-producing a luminescent device according to a first modification of the embodiment.

FIG. **11** is an exploded perspective view illustrating a luminescent device with a heat sink according to the first modification.

FIG. **12** shows enlarged plan and side views illustrating a state where the luminescent device with the heat sink according to the first modification is formed in an external frame.

FIGS. **13** (*a*) and (*b*) are top and bottom perspective views of the luminescent device according to the first modification.

FIGS. **14** (*a*) and (*b*) and FIGS. **15** (*a*) to (*c*) are sectional views of the luminescent device according to the first modification.

FIG. **16** is a perspective view illustrating a lead frame for use in mass-producing a luminescent device according to a second modification of the embodiment.

FIG. **17** is a flowchart illustrating a method of fabricating the luminescent device according to the second modification.

FIGS. **18** to **28** are perspective views illustrating the method of fabricating the luminescent device in accordance with the flowchart.

FIG. **29** is a conceptual sectional view of a luminescent device with a lens according to a second embodiment of the present invention.

FIG. **30** is a perspective view of the lens according to the second embodiment.

FIG. **31** is a conceptual view illustrating the operation of the total internal reflection lens according to the second embodiment.

FIG. **32** is a graph showing simulation results of the luminescent device according to the second embodiment.

FIG. **33** is a conceptual sectional view of a luminescent device with a lens according to a third embodiment of the present invention.

FIG. **34** is a perspective view of the lens according to the third embodiment.

FIG. **35** is a conceptual view illustrating the operation of the total internal reflection lens according to the third embodiment.

FIG. **36** is a graph showing simulation results of the luminescent device according to the third embodiment.

FIG. **37** is a conceptual sectional view of a luminescent device with a lens according to a fourth embodiment of the present invention.

FIG. **38** is a perspective view of the lens according to the fourth embodiment.

FIG. **39** is a conceptual view illustrating the operation of the total internal reflection lens according to the fourth embodiment.

FIG. **40** is a graph showing simulation results of the luminescent device according to the fourth embodiment.

FIG. **41** is a conceptual sectional view of a luminescent device with a lens according to a fifth embodiment of the present invention.

FIG. **42** is a perspective view of the lens according to the fifth embodiment.

FIG. **43** is a conceptual view illustrating the operation of the total internal reflection lens according to the fifth embodiment.

FIG. **44** is a graph showing simulation results of the luminescent device according to the fifth embodiment.

BEST MODE FOR CARRYING OUT THE INVENTION

Hereinafter, preferred embodiments of the present invention will be described in detail with reference to the accompanying drawings. However, the present invention is not limited to the embodiments but may be implemented into different forms. These embodiments are provided only for illustrative purposes and for full understanding of the scope of the present invention by those skilled in the art. Throughout the drawings, like elements are designated by like reference numerals.

FIG. **3** is a conceptual view illustrating a critical angle.

Referring to FIG. **3**, the critical angle refers to the smallest incidence angle θ_c of at which total internal reflection occurs

at a refractive boundary when light travels from a material with a high refractive index n**1** to another material with a low refractive index n**2**. That is, if light meets and is refracted on the other material (n**2**<n**1**) as shown in FIG. **3** (*b*), the incidence angle that results in a refraction angle of 90 degrees is referred to as the critical angle. At this time, the incidence angle refers to an angle θ_{c1} measured with respect to the normal at the refractive boundary. If an incidence angle is greater than the critical angle, total internal reflection occurs.

In a case where light is vertically incident from one medium n**1** on another medium n**2** in the two different media (n**2**<n**1**) as shown in FIG. **3** (*b*), if a boundary surface of the medium n**1** has a certain slope, an angle defined between the incident light and the normal perpendicular to the boundary surface becomes greater than the critical angle ($\theta_{c2}>\theta_{c1}$). As a result, the light is not transmitted through the other medium n**2** after passing through the medium n**1** but is reflected toward the inside of the medium n**1**. With the use of the total internal reflection phenomenon of light, the light is not transmitted but reflected even on a transparent surface. Here, one of the media may be a material with superior transmittancy, and the other medium may be air.

Embodiment 1

FIG. **4** is a sectional conceptual view of a luminescent device with a lens according to a first embodiment of the present invention, FIG. **5** is a plan view of the lens according to the first embodiment, FIG. **6** is a conceptual view illustrating the operation of the total internal reflection lens according to the first embodiment, FIG. **7** is a graph showing simulation results of the luminescent device with the lens according to the first embodiment, and FIGS. **8** and **9** are graphs showing experimental measurement results.

Referring to FIGS. **4**, **5** and **6**, the luminescent device with the lens according to this embodiment comprises a substrate **100**; a luminescent chip **110** mounted on the substrate **100**; and a lens that encapsulates the luminescent chip **110** and has a V-shaped first total reflection surface **121** with a predetermined slope with respect to a central axis, a second total reflection surface **122** extending outward therefrom with a slope smaller than that of the first total reflection surface **121**, and a curved refractive surface **123** extending downward from a periphery of the second total reflection surface **122**. Here, it is preferred that the curved refractive surface be in the form of a part of an ellipse.

First, the aforementioned lens of this embodiment will be described below.

The first total reflection surface **121** is made in the form of a V-shaped recess over the luminescent chip **110**, the curved refractive surface **123** is formed to be rounded downward from the periphery of the second total reflection surface **122**, and the second total reflection surface **122** is formed to be inclined upward between the recess and a periphery of the refractive surface **123**. Assuming that the height T of the entire lens **120** is 1 as shown in FIG. **4**, the height T**2** of the first reflection surface **121** is ¼ to ½, and the height T**1** of the second reflection surface **122** is ¼ to ½. As shown in the figure, the height of the refractive surface is the same as the entire lens. Assuming that the diameter C of the entire lens **120** is 1 as shown in FIG. **5**, the maximum diameter A of the first reflection surface **121** is ⅛ to ⅓, and the maximum diameter B of the second reflection surface **122** is ⅙ to ½.

Further, it preferred that the curved refractive surface **123** be made in the form of an ellipse and a ratio of minor and major axes of the ellipse be in a range of 1:2 to 1:4. More preferably, the ratio of the minor and major axes is 1:3.

At this time, as described above, each of the slopes of the reflection surfaces **121** and **122** should be set such that an angle defined by the total reflection surface and light emitted from the luminescent chip **110** and incident on the total reflection surface becomes greater than a critical angle. That is, since the critical angle varies depending on a refractive index of the lens **120**, the lens **120** of this embodiment is made of a material with a refractive index of 1.2 to 2.0 so that the critical angle becomes 30 to 60 degrees.

As such, in order that the angle defined by the total reflection surface and light incident on the total reflection surface **121** or **122** becomes greater than the critical angle, this embodiment is implemented such that the slope of the first reflection surface **121** is 30 to 89 degrees, and the slope of the second reflection surface **122** is 20 to 60 degrees. At this time, the slopes refer to angles defined by the first and second reflection surfaces **121** and **122** and the lower substrate **100**. Preferably, the slope of the first reflection surface **121** is 40 to 70 degrees and the slope of the second reflection surface **122** is 30 to 50 degrees.

Accordingly, as shown in FIG. **6**, light that is incident from a light source (luminescent chip) in a range of ±40 to ±45 with respect to an x-axis direction (vertical direction) is totally reflected on the first and second total reflection surfaces **121** and **122** toward sides of the lens **120** (in a horizontal direction), and then emitted in a y-axis direction through the single elliptical refractive surface **123**. Meanwhile, light that is incident out of the range of ±40 to ±45 degrees with respect to the x-axis direction is immediately refracted through the curved refractive surface **123** and then emitted in the y-axis direction. In this embodiment, based on about 42 degrees, light is totally reflected on the total reflection surfaces **121** and **122** and then emitted through the refractive surface at the side of the lens, or the light is emitted through the refractive surface without being reflected by the total reflection surfaces **121** and **122**.

As such, the lens **120** of the present invention is constructed to have the total reflection surfaces with different slopes with respect to a central axis and the curved refractive surface **123** at the periphery of the lens, so that a peak value of luminous intensity is located in a range of ±10 with respect to ±80 as shown in FIGS. **7**, **8** and **9**. Further, the luminous intensity at zero degrees is minimized to be 0 to 20% of the peak value. Preferably, it is minimized to be 5 to 10% of the peak value.

In FIG. **7**, a simulation was made on condition that a lens **120** with a refractive index of 1.5 was used, an angle defined by the first total reflection surface **121** and light emitted from the luminescent chip **110** was about 50 degrees, which was greater than the critical angle, and an angle defined by the second total reflection surface **122** and light emitted from the luminescent chip **110** was about 43 degrees. Then, luminous intensity was measured in a range of +90 to −90 degrees with respect to a region where the luminescent chip was located. The simulation results are shown in the graph. As shown in the graph of FIG. **7**, the luminous intensity is the highest in the vicinity of ±80 degrees. That is, the luminous intensity is about 0.93 at −80 degrees and about 0.96 at +78 degrees. The luminous intensity is not greater than 0.1 in a range of ±40 degrees.

In FIG. **8**, an experiment was performed on condition that a lens **120** with a refractive index of 1.5, an angle defined by the first total reflection surface **121** and light emitted from the luminescent chip **110** was about 50 degrees, which was greater than the critical angle, and an angle defined by the second total reflection surface **122** and light emitted from the luminescent chip **110** was about 43 degrees. Then, luminous intensity was measured in a range of +90 to −90 with respect to a region where the luminescent chip was located. The

experimental results are shown in the graph. In FIG. **9**, the results are shown in polar coordinates. As shown in the graphs of FIGS. **8** and **9**, the luminous intensity is the highest in the vicinity of ±75 degrees with respect to the luminescent chip, i.e., a luminescent device. That is, the luminous intensity is about 1 at −74 degrees and about 0.99 at +78 degrees. The luminous intensity is not greater than 0.1 in a range of ±20 degrees and not greater than 0.2 in a range of +40 degrees.

This is because light totally reflected on the first and second reflection surfaces **121** and **122**, and light refracted through the refractive surface **123** travels in the side direction of the luminescent device.

The aforementioned lens **120** of the present invention may be fabricated through an injection molding process or through a grinding process of grinding a top surface of the lens **120** with an elliptical contour. In the case where the lens of the present invention is fabricated by means of such fabricating methods, since the lens has a refractive surface in the form of a single elliptical refractive surface, the lens can be easily fabricated, thereby reducing a defective rate and fabricating costs. In addition, as compared with the aforementioned prior art in which a plurality of refractive surfaces of a lens have their slopes over certain distances, resulting in a large size, the present invention enables improvement of side illumination effects and fabrication of a lens with a compact size since the lens has a single refractive surface in the form of an ellipse.

Further, the conventional lens has the refractive surfaces in the form of sawteeth indented toward a central axis, but the lens of the present invention has the refractive surface formed to extend outward from the periphery of the total reflection surface.

All types of luminescent chips for emitting light through PN junction can be used as the luminescent chip **110**, and a plurality of luminescent chips **110** may be mounted on the substrate.

A first modification of a luminescent device including the lens according to the aforementioned first embodiment will be described below with reference to the accompanying drawings.

FIG. **10** shows plan and side views of an external frame for use in mass-producing a luminescent device according to the first modification of the embodiment, FIG. **11** is an exploded perspective view illustrating a luminescent device with a heat sink according to the first modification, and FIG. **12** shows enlarged plan and side views illustrating a state where the luminescent device with the heat sink according to the first modification is formed in an external frame.

As shown in FIG. **10**, the external frame **201** for use in fabricating luminescent devices according to this modification is formed with a plurality of unit bodies each of which comprises lead terminals **200** and connection terminals **210** at a predetermined interval. The lead terminals **200** are formed in pairs integrally with the connection terminals **210**, and the connection terminals **210** are formed as a symmetric structure to define a hollow portion **240** with a predetermined shape on a central axis. For the sake of easy description of the structure of the lead terminal, the lead terminal **200** and the connection terminal **210** are described as separate members. However, the term "lead terminal" may be used to express a meaning including both the lead terminal **200** and the connection terminal **210**.

Further, as described above, the connection terminals **210** defining the hollow portion **240** are supported by panel supports **220** to be fixed to the external frame **201**, and the panel supports perform the function of fixing the positions of the connection terminals **210** when first and second package housings **300** and **310** to be described later are fixed.

In the meantime, although the hollow portion **240** formed at the center of the symmetric connection terminals **210** has a hexagonal shape in this modification, it may take the shape of a circle or a polygon with more than four sides.

After the external frame **201** for use in fabricating the luminescent device according this modification is formed as such, the first and second package housings **300** and **310**, and a heat sink **330** are sequentially secured thereto to form a structure shown in FIG. **11**.

That is, the first package housing **300** with a predetermined shape (rectangular shape) is located on the top of the pair of connection terminals **210** formed integrally with the lead terminals **200** in the external frame **201**, and the second package housing **310** is located on the bottom of the connection terminals **210**. Further, the lens **120** with the total reflection surfaces **121** and **122** and the refractive surface **123** according to the embodiment is fixed on the first package housing **300**.

The first package housing **300** is recessed at a central portion thereof to contain an encapsulant and has a through-hole **380** for exposing the hollow portion **240** and terminal portions of the connection terminals **210** at the bottom thereof. Although the through-hole **380** has the same area as the recessed portion, it may have an area smaller than that of the recessed portion as shown in the figure. The recessed portion and the through-hole **380** form an opening portion of the package housing. A stepped portion **390** is formed in an inner surface of the recessed portion to contain the encapsulant, which will be described later, for a luminescent device.

An upper surface of the second package housing **310** is formed with receiving grooves **320** that have the same shape as the connection terminals **210** to receive the connection terminals **210** therein, and a lower surface of the second package housing **310** is formed with a heat sink-seating grooves **370** into which the heat sink **330** to be described later can be inserted.

Further, a circular through-hole **350** is formed at the center of the second package housing **310** to receive an insertion projection **340** of the heat sink **330** therein, and an inner space of the insertion projection **340** becomes a luminescent chip-seating portion **360** in which a luminescent chip **400** to be described later will be fixedly seated.

Meanwhile, the first and second package housings **300** and **310** in the present invention can be made of materials such as thermal conductive plastics or high thermal conductive ceramics. The thermal conductive plastics include acrylonitrile butadiene styrene (ABS), liquid crystalline polymer (LCP), polyamide (PA), polyphenylene sulfide (PPS), thermoplastic elastomer (TPE) and the like. The high thermal conductive ceramics include alumina (Al_2O_3), silicon carbide (SiC), aluminum nitride (AlN) and the like. Among the ceramics, aluminum nitride (AlN) has properties equivalent to those of alumina and is superior to alumina in view of thermal conductivity. Thus, aluminum nitride has been widely used in practice.

In a case where the material of the first and second package housings **300** and **310** is thermal conductive plastics, the first package housing **300** and the second package housing **310** are respectively located on the top and bottom of the connection terminals **210** symmetrically formed in the external frame **201**, and then fixedly attached thereto through compression at high temperature. Here, it is important to consider the shape of the through-hole **380** and the stepped portion **390**, which are formed within the first package housing **300**. That is, the through-hole **380** and the stepped portion **390** are formed by locating the first and second package housings **300** and **310** on the top and bottom of the external frame **201** and by pressing them using a pressing means with a projection, which takes

the shape corresponding to the shape of the though-hole **380** and the stepped portion **390**, at high temperature.

Meanwhile, in a case where the material of the first and second package housings **300** and **310** is ceramics, the first package housing **300** and the second package housing **310** are fabricated in advance to have an accurate size and shape. That is, since the ceramics cannot be formed into a desired shape in a final application step due to its property by which the ceramics is formed into a desired shape at a high temperature of greater than 1000° C., the first and second package housings **300** and **310** are fabricated in advance to have a precise size and shape. At this time, the through-hole **380** and the stepped portion **390** should be formed in the first package housing **300** to be fabricated.

Therefore, the ceramic first and second package housings **300** and **310** fabricated in advance as described above are respectively located on the top and bottom of the connection terminals **210** of the external frame **201**, and then fixedly attached thereto using an adhesive with high adhesive strength.

A luminescent device to be assembled into the external frame **201** fabricated as above is formed on each of the unit bodies each of which comprises the lead terminals **200** formed in the external frame **201** and the connection terminals **210** formed in the symmetrical manner integrally with the lead frames, as shown in FIG. **12**.

Further, at least one luminescent chip **400** is fixedly attached to the luminescent chip-seating portion **360** at the center of the heat sink **330** constituting the luminescent device formed as described above, and the luminescent chip is electrically connected to the connection terminals **210** through connection wires **420**.

Further, a zener diode **410** can be mounted in the luminescent chip-seating portion **360** and then connected, with polarity matching, to the mounted luminescent chip **400** through the connection wire **420** so as to electrically protect the luminescent chip **400**. The zener diode **410** is a semiconductor device using a phenomenon in which when a relatively high reverse voltage is applied to a p-n or n-p junction of a semiconductor, a high current is started to rapidly flow with a certain voltage, and the voltage is sustained to be constant. If the zener diode **410** is applied to the luminescent device, a constant voltage can be sustained even though static electricity or a sudden current is supplied, thereby enhancing reliability of a product.

FIGS. **13** (*a*) and (*b*) are top and bottom perspective views of the luminescent device according to this modification, and FIGS. **14** (*a*) and (*b*) and FIGS. **15** (*a*) to (*c*) are sectional views of the luminescent device according to this modification.

A plurality of luminescent devices according to this modification are formed in the external frame **201** through the aforementioned fabricating process, and each of the formed luminescent devices is cut and withdrawn from the external frame **201** around the first and second package housings **300** and **310**.

In the withdrawn luminescent device of the present invention, as shown in FIG. **13**, the lead terminals **200** are bent by a predetermined length and at a predetermined angle to match with connection terminals on a PCB substrate.

As shown in FIGS. **13** (*b*) and **14**, the heat sink **330** of the luminescent device according to the present invention is fixed to the bottom of the second package housing **310** while being inserted upward thereinto, such that it protrudes beyond the lower surface of the second package housing **310**. That is, this is because the surface of the heat sink **330** protruding downward beyond the lower surface of the second package housing **310** is intended to come into direct contact with a heat dissipation member (not shown) so as to maximize heat dissipation effects when the luminescent device is fabricated and applied in practice.

Further, as shown in FIG. **14**, stepped portions **390***a* and **390***b* (collectively designated by **390**) are doubly formed within the inner space of the first package housing **300**, so that they can be used as fixing steps required for molding the encapsulant to be described later or for mounting the lens **120** with the total reflection surfaces and the refractive surface according to this embodiment.

Further, an outer surface of the insertion projection **340** of the heat sink **330** constituting the luminescent device is formed with a latching step **340***a* to be fixedly inserted into a groove formed in a wall defining the through-hole **350** in the second package housing **310**, so that the insertion projection **340** of the heat sink **330** can be firmly fixed to the through-hole **350** of the second package housing **310**. The latching step **340***a* may be formed on the body of the heat sink. The latching step **340***a* may be formed at an edge of an uppermost portion of the insertion projection **340** of the heat sink **330**. At this time, the latching step **340***a* is coupled to the upper surface of the second package housing **310**, thereby fixing the heat sink **330**.

Meanwhile, in the luminescent device according to this modification, the encapsulant **450** for protecting the luminescent chip **400** and the connection wires **420** while transmitting light emitted from the luminescent chip **400** is molded within the inner space of the first package housing **300**.

As shown in FIG. **15** (*a*), the encapsulant **450** may be epoxy resin and contain a fluorescent substance for converting light emitted from the luminescent chip **400**.

In addition, the encapsulant **450** may contain a diffusing substance for uniform distribution of light.

Further, as shown in FIG. **15** (*b*), if the encapsulant **450** is epoxy resin containing a fluorescent substance, the encapsulant may be further molded with the epoxy resin **470** on the top thereof to obtain more stable molding effects.

Further, as shown in FIG. **15** (*c*), the luminescent device is molded with the encapsulant **450** as shown in FIGS. **15** (*a*) and (*b*), and the lens **120** with the total reflection surfaces **121** and **122** and the refractive surface **123** according to the present invention is then fixed to the upper stepped portion **390***b* of the first package housing **300** to ensure side luminescence and to more stably protect the internal, mounted objects (luminescent chip and bonding wires).

Although the molding with the encapsulant and the subsequent fixing of the lens have been described in the above, this modification is not limited thereto. The encapsulant and the lens may be formed integrally with each other. That is, the encapsulant may be formed with total reflection surfaces and a refractive surface on the top thereof so that it can function as the lens of the present invention, or the lens may also be used as the encapsulant.

A luminescent device including the lens of the embodiment in accordance with a second modification will be described below with reference to the accompanying drawings.

FIG. **16** is a perspective view illustrating a lead frame for use in mass-producing the luminescent device according to the second modification of the embodiment, FIG. **17** is a flowchart illustrating a method of fabricating the luminescent device according to this modification, and FIGS. **18** to **21** are perspective views illustrating the method of fabricating the luminescent device in accordance with the flowchart.

First, a lead frame in this modification will be described with reference to FIG. **16**.

Referring to FIG. **16**, the lead frame **500** has a heat sink support ring **530** into which a heat sink can be inserted thereinto. The support ring **530** may be in the form of a circular ring as shown in the figure. However, it is not limited thereto but may be in the form of a polygonal ring.

In the meantime, an external frame **510** surrounds the support ring **530**. The external frame **510** is located to be spaced apart from the support ring **530**. The external frame **510** may be in the form of a square as shown in the figure. However, it is not limited thereto but may be in the form of a circle or other polygons.

The external frame **510** and the support ring **530** are connected by at least two connection terminals **550***a* and **550***b*. The connection terminals **550***a* and **550***b* are located on both opposite sides of the external frame **510** and fix the support ring **530** to the external frame **510**. Additional connection terminals except the connection terminals **550***a* and **550***b* may connect the support ring **530** to the external frame **510**.

Further, at least two lead terminals **570***a*, **570***b*, **570***c*, **590***a*, **590***b* and **590***c* extend toward the support ring **530** from the external frame **510**. However, the lead terminals are spaced apart from the support ring **530**. As shown in the figure, the lead terminals **570***a*, **570***b*, **570***c*, **590***a*, **590***b* and **590***c* have wider distal ends in the vicinity of the support ring **530**. Meanwhile, it is preferred that the lead terminals be arranged on both opposite sides of the external frame **510**.

The number of required lead terminals is determined depending on the kinds and number of luminescent chips to be mounted and bonding wire-connecting methods. However, it is preferred that the lead frame **500** have a large number of lead terminals to be used in a variety of cases. As shown in the figure, the lead terminals are arranged in a direction perpendicular to the connection terminals **550***a* and **550***b*, so that a large number of lead terminals can be arranged in an identical direction.

The lead frame **500** according to an embodiment of the present invention can be fabricated by pressing a plate made of phosphor bronze, which is a copper alloy, using a press die. Meanwhile, although one lead frame **500** is shown in FIG. **16**, a plurality of lead frames **500** may be fabricated and arranged in one phosphor bronze plate. In particular, a plurality of lead frames **500** fabricated in one phosphor bronze plate are used for mass production of the luminescent device.

Referring to FIG. **17**, the lead frame **500** described above with reference to FIG. **16** is prepared (S**01**).

As described above, the lead frame **500** can be fabricated by pressing a phosphor bronze plate, and a plurality of lead frames **500** can be fabricated and arranged in one phosphor bronze plate.

Referring to FIGS. **17** and **18**, a heat sink **600** fixedly insertable into the support ring **530** of the lead frame **500** is prepared. The heat sink **600** has a top surface on which a luminescent chip is to be mounted. It is preferred that the top surface of the heat sink **600** have a diameter smaller than the inner diameter of the support ring **530** so that the heat sink can be easily inserted thereinto and that the outer diameter of the side of the heat sink **600** be larger than the inner diameter of the support ring **530**.

Further, the heat sink **600** may have a support ring-receiving groove **630***a* enabling the heat sink to be fastened to the support ring **530**. Furthermore, the support ring-receiving groove **630***a* may be provided as a spiral groove for facilitating the fastening thereof to the support ring **530**.

Meanwhile, the heat sink **600** may have a base **610** and a projection **630** protruding upwardly from the center of the base **610**. At this time, the support ring-receiving groove **630***a* is disposed in a side surface of the projection **630**. The base portion **610***a* and the projection **630** may be in the form of cylinders as shown therein. However, they are not limited thereto but may be in the form of polygonal posts. Although the projection **630** can have a shape similar to an inner shape of the support ring **530**, it is not limited thereto. That is, the support ring **530** may be in the form of a circular ring, and the projection **630** may be in the form of a square post.

The heat sink **600** can be fabricated of a metal with high thermal conductivity or a thermal conductive resin using a press or molding technique. The heat sink **600** is fabricated using a process separate from a process of preparing the lead frame **500**. Therefore, the order of the steps of preparing the lead frame **500** (S**01**) and the heat sink **600** (S**03**) may be changed, or the steps may be performed at the same time.

Referring to FIGS. **17** and **19**, the heat sink **600** is fixedly inserted into the support ring **530** of the lead frame **500** (S**05**). Since the outer diameter of the side of the heat sink **600** is larger than the inner diameter of the support ring **530**, the heat sink **600** can be forcibly inserted into and fixed to the support ring **530**.

Meanwhile, if the support ring-receiving groove **630***a* is formed, the support ring **530** is received in the support ring-receiving groove **630***a* and supports the heat sink **600**. At this time, it is preferred that a portion of the support ring **530** be received in the support ring-receiving groove **630***a*, and the remainder thereof protrude to an outer surface of the projection **630**, as shown in figure. Further, if the support ring-receiving groove **630***a* is a spiral groove, the heat sink **600** can be screwed and fastened to the support ring **530**.

Referring to FIGS. **17** and **20**, after the heat sink **600** is fixed to the lead frame **500**, a package body **700** is formed using an insert molding technique (S**07**). The package body **700** can be formed through insert molding with a thermosetting or thermoplastic resin.

The package body **700** is formed around the heat sink **600** to support the support ring **530**, the connection terminals **550***a* and **550***b*, the lead terminals **570***a*, **570***b*, **570***c*, **590***a*, **590***b* and **590***c*, and the heat sink **600**. Some portions of the connection terminals and the lead terminals protrude to the outside of the package body **700**. Further, the package body **700** has an opening through which an upper end of the heat sink **600** and the lead terminals are exposed.

As shown in FIG. **20**, some portions of the support ring **530** and the connection terminals **550***a* and **550***b* can be exposed through the opening. Accordingly, a groove is formed in the top of the package body **700**. On the contrary, as shown in FIG. **21**, the package body **700** can cover most portions except the upper end of the heat sink **600**, and expose only some portions of the lead terminals. Thus, a plurality of sub-openings can be defined.

Even in this case, it is preferred that a groove surrounded by the sidewall of the package body be also formed at an upper portion of the package body **700**, as shown in the figure.

Further, the lower surface of the heat sink **600** is exposed to the outside. In addition thereto, the side of the base portion **610** may also be exposed. Accordingly, heat dissipation through the heat sink **600** can be promoted.

Meanwhile, although the package body **700** can take the shape of a cylinder, as shown in FIGS. **20** and **21**, it is not limited thereto but may be the shape of a polygonal post such as a square post.

After the heat sink **600** is coupled to the lead frame **500**, the package body **700** is formed by insert-molding a thermosetting or thermoplastic resin, so that the heat sink **600** and the package body **700** are strongly coupled to with each other.

Referring to FIGS. **17** and **22**, portions of the connection terminals **550***a* and **550***b*, which protrude to the outside of the

package body **700**, are cut and removed (S**09**). As a result, the cut connection terminals **560***a* and **560***b* are left in the package body **700**, and these connection terminals and the support ring **530** more prevent the heat sink **600** from being separated from the package body **700**.

In the meantime, while the connection terminals are cut, the remainder of the lead terminals except some lead terminals, which are intended to be used for applying a current, among the lead terminals protruding to the outside of the package body **700** may be cut and removed together with the connection terminals. For example, as shown in FIG. **23**, in a case where only two lead terminals **570***c* and **590***c* are needed, the remainder of the lead terminals **570***a*, **570***b*, **590***a* and **590***b* are cut and removed. Further, as shown in FIG. **24**, in a case where four lead terminals **570***a*, **570***c*, **590***a* and **590***c* are needed, the remainder of the lead terminals **570***b* and **590***b* are cut and removed.

The process of cutting and removing the lead terminals is a process performed in a case where lead terminals of which the number is larger than that of lead terminals required in a luminescent device are provided in the lead frame **500**. Thus, if the number of lead terminals required in a luminescent device is identical with that of lead terminals provided in the lead frame **500**, the process of cutting and removing lead terminals is not performed. Further, since left excess lead terminals, if any, do not influence the operation of a luminescent device, the process of cutting and removing the excess lead terminals is not an inevitable process.

Referring to FIGS. **17** and **25**, luminescent chips **800** are mounted on an upper surface of the heat sink **600** (S**11**). The luminescent chip **800** may be a one-bond die with an electrode on each of top and bottom surfaces thereof or a two-bond die with two electrodes on a top surface thereof.

If the luminescent chip **800** is a one-bond die, it is preferred that the heat sink **600** be made of a metallic material with electric conductivity. At this time, the luminescent chip **800** is mounted on the heat sink **600** by means of an electric conductive adhesive such as silver epoxy. Otherwise, if all the luminescent chips **800** to be mounted on the heat sink **600** are two-bond dies, the heat sink **600** is not necessarily to be electrically conductive, and they may be mounted on the heat sink **600**, for example, by means of various kinds of thermally conductive adhesives.

In the meantime, a plurality of luminescent chips **800** may be mounted on the heat sink **600**. Further, the plurality of luminescent chips **800** may be luminescent chips that can emit light with different wavelengths. For example, as shown in FIG. **25**, three luminescent chips **800** can be mounted. At this time, the luminescent chips **800** may be luminescent chips for respectively emitting red, green and blue light. Accordingly, a luminescent device emitting light with all kinds of colors can be provided using the luminescent chips **800**.

Referring to FIGS. **17** and **26**, luminescent chips **810**, **830** and **850** and the lead terminals **570***a*, **570***b*, **570***c*, **590***a*, **590***b* and **590***c* are electrically connected through bonding wires (S**13**). In a case where all the luminescent chips **810**, **830** and **850** are two-bond dice, each of the luminescent chips is connected to two lead terminals through two bonding wires. Meanwhile, as shown in the figure, the luminescent chips **810**, **830** and **850** can be electrically connected to different pairs of lead terminals, respectively. Moreover, one common lead terminal (e.g., **570***b*) and the luminescent chips can be connected through the bonding wires, and the other lead terminals (e.g., **590***a*, **590***b*, **590***c*) located at a side opposite to the common lead terminal can be connected to the luminescent chips through different bonding wires, respectively. In this case, the luminescent chips can be driven with different currents, respectively.

Meanwhile, as shown in FIG. **27**, a one-bond luminescent chip **810***a* and two-bond luminescent chips **830** and **850** can be mounted together. At this time, one lead terminal **570***b* of the lead terminals is electrically connected to the heat sink **600** through a bonding wire. Therefore, the lead terminal **570***b* is electrically connected to a bottom surface of the one-bond luminescent chip **810***a* through a bonding wire and the heat sink **600**. There are various combinations of one-bond dies and two-bond dies, and one of various methods of connecting bonding wires in the combinations can be selected.

Further, one of various methods of connecting lead terminals to luminescent chips can be selected, and a plurality of luminescent chips may be connected in series, in parallel or in series-parallel.

In the meantime, after the luminescent chips **810**, **830** and **850** and the lead terminals are connected through the bonding wires, the luminescent chips **810**, **830** and **850** are encapsulated with an encapsulant (not shown) (S**15**). The encapsulant can encapsulate the luminescent chips and the bonding wires by filling the opening of the package body **700**.

Further, the encapsulant can contain a fluorescent substance. For example, the fluorescent substance can convert the color of light from blue into yellow, or into green and red. Thus, if a luminescent chip emitting blue light is mounted on the heat sink **600**, it is possible to provide a luminescent chip emitting white light to the outside by converting some of light emitted from the luminescent chip into yellow, or green and red light. In addition thereto, the encapsulant may further contain a diffusing substance. The diffusing substance prevents the luminescent chips and the bonding wires from being viewed from the outside by dispersing light emitted from the luminescent chips, and the diffusing substance also enables light to be uniformly emitted to the outside.

After the luminescent chips are encapsulated with the encapsulant, the lens **120** with the total reflection surfaces **121** and **122** and the refractive surface **123** according to this embodiment is attached on the package body **700** (S**17**). The lens **120** is used to emit light within a predetermined directional angle, which guides and emits light from the luminescent chip **800** toward the side of the lens in this embodiment.

Although the processes of forming the encapsulant and attaching the lens have been described above as separate processes for the sake of convenience of description, it is not limited thereto, and the luminescent chips may be encapsulated directly with a lens with total reflection surfaces and a refractive surface. That is, the total reflection surfaces and the refractive surface may be formed on the top of the encapsulant.

Referring to FIGS. **17** and **28**, the lead terminals **570***a*, **570***b*, **570***c*, **590***a*, **590***b* and **590***c* are cut from the external frame **510** and then bent (S**19**). As a result, a luminescent device that can be subjected to surface mounting is obtained. Meanwhile, the step of cutting and removing the connection terminals (S**09**) may be performed together with step S**19**.

Next, the luminescent device of this modification will be described with reference to FIG. **28**.

Referring back to FIG. **28**, the luminescent device includes the heat sink support ring **530**. The support ring **530** is made of a copper alloy such as phosphor bronze. Although the support ring **530** can take the shape of a circular ring as shown in the figure, it is not limited thereto but may take the shape of a polygonal ring. The cut connection terminals **560***a* and **560***b* are disposed while extending from the outside of the support

ring **530**. The cut connection terminals **560***a* and **560***b* can be located at opposite sides of the support ring **530**.

As described with reference to FIG. **18**, the heat sink **600** is inserted into the support ring **530**.

Meanwhile, at least two lead terminals **570***a*, **570***b*, **570***c*, **590***a*, **590***b* and **590***c* are arranged at the both sides of the support ring while being spaced apart from the support ring **530** and the heat sink **600**. The lead terminals may be bent to enable surface mounting.

In addition thereto, the package body **700** supports the heat sink **600** and the lead terminals by means of molding. The package body **700** has the opening through which the upper end of the heat sink **600** and some portions of the lead terminals are exposed at the upper portion of the package body. Meanwhile, the portions of the lead terminals protruding outward through the sidewall of the package body **700** help prevent the heat sink **600** from being separated from the package body **700**.

As described with reference to FIG. **20**, some portions of the support ring **530** and the connection terminals **550***a* and **550***b* can be exposed through the opening. Accordingly, the grooves are formed at the upper portion of the package body **700**. Further, as described with reference to FIG. **21**, the package body **700** can cover most portions except the upper end of the heat sink **600** and expose only some portions of the lead terminals. Thus, a plurality of openings can be formed. Even in this case, it is preferred that the package body **700** have the groove surrounded by the sidewall of the package body as shown in FIG. **21**.

The package body **700** is a plastic resin body formed by insert-molding a thermosetting or thermoplastic resin after the heat sink **600** is fixedly inserted into the support ring **530**.

The luminescent chips **810**, **830** and **850** are mounted and located on the upper surface of the heat sink **600**. Although the luminescent chips shown in FIG. **28** are two-bond dies, they are not limited thereto. The luminescent chips may be one-bond dies or a combination of one-bond and two-bond dies.

The luminescent chips are electrically connected to the lead terminals through the bonding wires. In a case where the luminescent chips are two-bond dies, each of the luminescent chips is electrically connected to two lead terminals through two bonding wires. Meanwhile, in a case where at least one of the luminescent chips is a one-bond die, the heat sink is electrically connected to at least one lead terminal through a bonding wire.

There are various methods of connecting the lead terminals and the luminescent chips and one of them can be selected according to characteristics of required luminescent chips.

Meanwhile, the lens **120** with the total reflection surfaces **121** and **122** and the refractive surface **123** according to this embodiment covers and encapsulates the luminescent chips.

As described above, the luminescent device with the lens according to this embodiment is not limited to the aforementioned modification but may be applied to various kinds of luminescent chips.

Further, the present invention is not limited to the shape of the lens according to the embodiment but may further include a linear refractive surface.

A lens further comprising a horizontal linear refractive surface according to a second embodiment will be described below. In the following second embodiment, a description thereof overlapping with that of the previous embodiment will be omitted. Moreover, a description of a modification of a luminescent device with the lens will also be omitted since it overlaps with that of the previous embodiment.

Embodiment 2

FIG. **29** is a conceptual sectional view of a luminescent device with a lens according to a second embodiment of the present invention, FIG. **30** is a perspective of the lens according to the second embodiment, FIG. **31** is a conceptual view illustrating the operation of the total internal reflection lens according to the second embodiment, and FIG. **32** is a graph showing simulation results of the luminescent device according to the second embodiment.

Referring to FIGS. **29**, **30** and **31**, the lens of this embodiment comprises a first total reflection surface **1121** with a V-shaped section and a certain slope with respect to a central axis x; a second total reflection surface **1122** with a slope smaller than that of the first total reflection surface **1121**; a linear first refractive surface **1123***a* extending from a periphery of the second total reflection surface **1122** in a direction perpendicular to the central axis x; and a curved second refractive surface **1123***b* extending downward from a periphery of the linear first refractive surface **1123***a*.

As shown in FIG. **29**, the first total reflection surface **1121** is formed in the shape of a V-shaped recess above a luminescent chip **1110**, and the second total reflection surface **1122** is formed to extend upward from the recess and to have a gradient smaller than that of the first reflection surface **1121** with respect to the central axis x. Meanwhile, the linear refractive surface **1123***a* is made in the form of a straight line parallel to a substrate **1100** on which the luminescent chip **1110** is to be mounted, and the curved second refractive surface **1123***b* is made in the form of a downward round curve extending from the first refractive surface **1123***a*. Of course, the first refractive surface **1123***a* may be formed to be parallel to the bottom of the lens **120**. The first and second refractive surfaces **1123***a* and **1123***b* refer to surfaces that refract light guided to an edge of the lens toward the side thereof.

Assuming that the diameter of the entire lens **120** is 1 in the above, the first reflection surface **1121** is formed at the center of the lens **1120**, and the maximum diameter of the first reflection surface **1121** is 1/12 to 1/6; the second reflection surface **1122** is formed to cover the first reflection surface **1121** and has the maximum diameter of 1/7 to 1/3; the first refractive surface **1123***a* is constructed in the form of a circular strip to surround the second reflection surface **1122** and has the maximum diameter of 1/5 to 2/3; and the diameter of the second refractive surface **1123***b* is identical with that of the entire lens **1120**. Here, the width of the circular strip-shaped first refractive surface **1123***a* is 1/16 to 1/8 of the diameter of the lens. Assuming that the height of the lens **1120** is 1, the height of the first reflection surface **1121** is 1/6 to 1/2, and the height of the second reflection surface **1122** is 1/6 to 1/2.

The second refractive surface **1123***b* is made in the form of an ellipse as shown in FIG. **29**, and a ratio of minor and major axes of the ellipse is in a range of 1:4 or less. That is, it may be a circle.

At this time, the slope of each of the total reflection surfaces **1121** and **1122** is set such that an angle defined by the total reflection surface and light, which is emitted from the luminescent chip **1110** and is then incident on the total reflection surface, becomes greater than a critical angle, as described above. That is, since the critical angle varies depending on a refractive index of the lens **1120**, the lens **1120** of this embodiment is formed of a material with a refractive index of 1.2 to 2.0 so that the critical angle can be in a range of 30 to 60 degrees.

In order to cause the angle defined by the total reflection surface and light incident on the total reflection surface **1121** or **1122** to be greater than the critical angle, the slope of the

first reflection surface **1121** is 30 to 89 degrees, and that of the second reflection surface **1122** is 20 to 60 degrees in this embodiment. At this time, the slopes refer to angles defined by the first and second reflection surfaces **1121** and **1122**, and the lower substrate **1100**. Preferably, the slope of the first total reflection surface **1121** is 40 to 70 degrees and that of the second total reflection surface **1122** is 30 to 50 degrees. Further, it is preferred that the slope of the first refractive surface **1123***a* be formed to be 10 degrees or less. However, it has been previously described as being in a horizontal state where its slope is zero.

Accordingly, as shown in FIG. **31**, light R**2** and R**3**, which is emitted from a light source (luminescent chip) and incident on the first and second total reflection surfaces **1121** and **1122**, is totally reflected, and then emerges in a y-axis direction through the rounded second refractive surface **1123***b*. Light R**4** and R**1** incident on the first and second refractive surfaces **1123***a* and **1123***b* are refracted and then emerge in the y-axis direction.

As such, the lens **1120** of the present invention is formed to have the total reflection surfaces with different slopes at a central portion thereof, and the horizontal surface and the rounded surface at an edge portion thereof, so that a peak value of luminous intensity can be in a range of ±10 with respect to ±83, as shown in FIG. **32**.

In FIG. **32**, a lens **1120** with a refractive index of 1.5 was used such that an angle defined by the first total reflection surface **1121** and light emitted from the luminescent chip **1110** became about 50 degrees greater than the critical angle, and an angle defined by the second total reflection surface **1122** and light emitted from the luminescent chip **1110** became about 43 degrees. Then, luminous intensity was simulated in a range of +90 to −90 with respect to a region where the luminescent chip **1110** was located, and the results are shown in the graph. As shown in the graph of FIG. **32**, the luminous intensity is the highest in the vicinity of ±83 degrees. That is, the luminous intensity is about 0.97 at +83 degrees and about 0.94 at −83 degrees. Further, the luminous intensity is not greater than 0.2 within ±40.

This is because light totally reflected on the first and second reflection surfaces **1121** and **1122**, and light refracted through the first and second refractive surfaces **1123***a* and **1123***b* travels in the side direction of the luminescent device.

The lens **1120** of the present invention may be fabricated by means of an injection molding process or a grinding process of grinding a top surface of the lens **1120** with an elliptical curved surface. In a case of fabricating the lens of the present invention in this manner, since the lens is composed of the horizontal linear surface and the elliptical curved surface, its fabrication is facilitated, thereby reducing a defective rate and fabrication costs.

In addition, as described in the previous embodiment, as compared with the aforementioned prior art in which a plurality of refractive surfaces of a lens have their slopes over certain distances, resulting in a large size, the present invention enables improvement of side illumination effects and fabrication of a lens with a compact size since the lens has double refractive surfaces that are in the form of a straight line and an ellipse. Further, the conventional lens has the refractive surfaces indented toward a central axis, but the lens of the present invention has the refractive surface formed to extend outward from the periphery of the total reflection surface.

Although the most preferred embodiment in which the luminescent chip is encapsulated by the lens has been described in the present invention, a certain space (not shown) may be formed between the luminescent chip and the lens. At this time, a material with a refractive index of 1.2 to 2.0 can be selected as a material filled into the space. For example, the space may be filled with epoxy/silicon resin or air/another gas (e.g. nitrogen), or may be under a vacuum condition. Here, a fluorescent material can be further included in the space.

Moreover, although the lens includes the linear surface and the curved surface extending therefrom, it is not limited thereto but may be modified into various shapes. That is, the lens may include a linear surface extending from a curved surface, and the linear surface may be bent. Next, a side illumination lens with a linear surface extending from a curved surface and bent once, and a luminescent device with the lens according to a third embodiment of the present invention will be described below.

In the following third embodiment, a description thereof overlapping with that of the aforementioned embodiment will be omitted. Further, since a description of a modification of a luminescent device with the lens overlaps with that of the aforementioned embodiment, the description will be omitted.

Embodiment 3

FIG. **33** is a conceptual sectional view of a luminescent device with a lens according to a third embodiment of the present invention, FIG. **34** is a perspective view of the lens according to the third embodiment, FIG. **35** is a conceptual view illustrating the operation of the total internal reflection lens according to the third embodiment, and FIG. **36** is a graph showing simulation results of the luminescent device according to the third embodiment.

Referring to FIGS. **33**, **34** and **35**, the lens of this embodiment comprises a first total reflection surface **2121** with a V-shaped section and a certain slope with respect to a central axis x; a second total reflection surface **2122** with a slope smaller than that of the first total reflection surface **2121**; a curved first refractive surface **2123***a* extending downward from a periphery of the second total reflection surface **2122**; a linear second refractive surface **2123***b* extending from a periphery of the first refractive surface **2123***a* in a direction perpendicular to the central axis x; and a linear third refractive surface **2123***c* extending from a periphery of the second refractive surface **2123***b* in a direction parallel to the central axis x.

As shown in FIGS. **33** and **34**, assuming that the diameter of the entire lens **2120** is 1, the first reflection surface **2121** is formed at a central portion of the lens **2120**, and the maximum diameter of the first total reflection surface **2121** is 1/12 to 1/6; and the second reflection surface **2122** is formed to surround the first total reflection surface **2121**, and the maximum diameter thereof is 1/7 to 1/3. The first refractive surface **2123***a* is made in the form of an ellipse surrounding the second total reflection surface **2122**, and the maximum diameter thereof is 1/2 to 7/8; and the maximum diameter of the second and third refractive surfaces **2123***b* and **2123***c* is the same as the entire lens **2120**. Here, the width of the second refractive surface **2123***b* is 1/16 to 1/8 of the diameter of the lens.

Further, assuming that the height of the lens **2120** is 1, the height of the first total reflection surface **2121** is 1/12 to 1/6; the height of the second total reflection surface **2123** is 1/12 to 1/6; the height of the first refractive surface **2123***a* is 1/4 to 3/4; and the height of the third refractive surface **2123***c* is 1/4 to 3/4. Here, the first refractive surface **2123***a* is made in the form of an ellipse as shown in the figures, and a ratio of minor and major axes of the ellipse is formed in a range of 1:4 or less. That is, it may be a circle.

Accordingly, as shown in FIG. **35**, light R**4** and R**5**, which is emitted from a light source (luminescent chip) and is then incident on the first and second total reflection surfaces **2121**

and **2122** is totally reflected, and emerges in a y-axis direction through the downward rounded second refractive surface **1123***b*. Light R**3**, R**2** and R**1** incident on the first, second and third refractive surfaces **2123***a*, **2123***b* and **2123***c* is refracted and then emitted in the y-axis direction.

As such, the lens **1120** of the present invention is formed to have total the reflection surfaces with different slopes at the central portion thereof, and the rounded, horizontal and vertical surfaces at an edge thereof, so that a peak value of luminous intensity is located in a range of +10 with respect to +64, as shown in FIG. **36**.

In FIG. **36**, a lens **2120** with a refractive index of 1.5 was used such that an angle defined by the first total reflection surface **2121** and light emitted from the luminescent chip **2110** became about 50 degrees greater than a critical angle, and an angle defined by the second total reflection surface **2122** and light emitted from the luminescent chip **2110** became about 43 degrees. Then, luminous intensity is simulated in a range of +90 to −90 with respect to a region where the luminescent chip **1110** was located, and the results are shown in the graph.

As shown in the graph of FIG. **36**, the luminous intensity is the highest in the vicinity of ±64 degrees. That is, the luminous intensity is about 0.99 at +64 degrees and about 0.98 at −64 degrees. Further, the luminous intensity is not greater than 0.2 within ±40 degrees.

As described above, this is because light totally reflected on the first and second reflection surfaces **2121** and **2122**, and light refracted through the first to third refractive surfaces **2123***a*, **2123***b* and **2123***c* travels in the side direction of the luminescent device.

Since a method of fabricating the lens and a luminescent device with the lens are the same as the aforementioned embodiment, descriptions thereof will be omitted.

A side illumination lens with a linear surface bent twice and a curved surface extending therefrom, and a luminescent device with the lens according to a fourth embodiment of the present invention will be described below.

In the following fourth embodiment, a description thereof overlapping with that of the aforementioned embodiment will be omitted. Further, since a description of a modification of a luminescent device with the lens overlaps with that of the aforementioned embodiment, the description will be omitted.

Embodiment 4

FIG. **37** is a conceptual sectional view of a luminescent device with a lens according to a fourth embodiment of the present invention, FIG. **38** is a perspective view of the lens according to the fourth embodiment, FIG. **39** is a conceptual view illustrating the operation of the total internal reflection lens according to the fourth embodiment, and FIG. **40** is a graph showing simulation results of the luminescent device according to the fourth embodiment.

Referring to FIGS. **37**, **38** and **39**, the lens of this embodiment comprises a first total reflection surface **3121** with a V-shaped section and a certain slope with respect to a central axis x; a second total reflection surface **3122** with a slope smaller than that of the first total reflection surface **3121**; a linear first refractive surface **3123***a* extending from a periphery of the second total reflection surface **3122** in a direction perpendicular to the central axis x; a linear second refractive surface **3123***b* extending downward in parallel to the central axis x from a periphery of the first refractive surface **3123***a*; a linear third refractive surface **3123***c* extending from a periphery of the second refractive surface **3123***b* in the direction perpendicular to the central axis x; and a curved fourth refractive surface **3123***d* extending downward from a periphery of the third refractive surface **3123***c*.

As shown in FIGS. **37** and **38**, assuming that the diameter of the entire lens **3120** is 1, the maximum diameter of the first total reflection surface **3121** is 1/12 to 1/6, and the maximum diameter of the second total reflection surface **3122** is 1/7 to 1/3. The maximum diameter of the first refractive surface **3123***a* is 1/6 to 1/2, and the width of the first refractive surface **3123***a* is 1/36 to 1/24 of the diameter of the lens **3120**. The maximum diameter of the third refractive surface **3123***c* is 1/5 to 2/3, and the width of the third refractive surface **3123***c* is 1/24 to 1/7. The diameter of the fourth refractive surface **3123***d* is the same as the entire lens **3120**.

Further, assuming that the height of the lens **3120** is 1, the height of the first total reflection surface **3121** is 1/4 to 3/4; the height of the second total reflection surface **3122** is 1/6 to 1/4; the height of the second refractive surface **3123***b* is 1/12 to 1/8; and the height of the fourth refractive surface **3123***d* is 7/8 to 11/12. Here, the fourth refractive surface **3123***d* is made in the form of an ellipse as shown in the figures, and a ratio of minor and major axes of the ellipse is in a range of 1:4 or less. That is, it may be a circle.

Accordingly, as shown in FIG. **39**, light R**2** and R**6**, which is emitted from a light source (luminescent chip) and is then incident on the first and second total reflection surfaces **3121** and **3122**, are totally reflected, and emerges in a y-axis direction through the refractive surfaces **3123***a*, **3123***b*, **3123***c* and **3123***d*. Light R**5**, R**4**, R**3** and R**1** incident on the first to fourth refractive surfaces **3123***a*, **3123***b*, **3123***c* and **3123***d* are refracted and emerges in the y-axis direction.

As such, the lens **120** of the present invention is formed to have the total reflection surfaces with different slopes at a central portion thereof, and the rounded surface and the plurality of horizontal and vertical surfaces at an edge thereof, so that a peak value of luminous intensity is in a range of ±10 with respect to ±76 as shown in FIG. **40**.

In FIG. **40**, a lens **3120** with a refractive index of 1.5 was used such that an angle defined by the first total reflection surface **3121** and light emitted from the luminescent chip **3110** became about 50 degrees greater than a critical angle, and an angle defined by the second total reflection surface **3122** and light emitted from the luminescent chip **3110** became about 43 degrees. Then, luminous intensity is simulated in a range of +90 to −90 with respect to a region where the luminescent chip is located, and the results are shown in the graph.

As shown in the graph of FIG. **40**, the luminous intensity is the highest in the vicinity of ±76 degrees. That is, the luminous intensity is about 0.98 at +76 degrees and about 0.97 at −77 degrees. Further, the luminous intensity is not greater than 0.2 within ±40 degrees.

Since a method of fabricating the lens and a luminescent device with the lens are the same as the aforementioned embodiment, descriptions thereof will be omitted.

A side illumination lens with a linear surface bent once and a curved surface extending therefrom, and a luminescent device with the lens according to a fifth embodiment of the present invention will be described below.

In the following fifth embodiment, a description thereof overlapping with that of the aforementioned embodiment will be omitted. Further, since a description of a modification of a

luminescent device with the lens overlaps with that of the aforementioned embodiment, the description will be omitted.

Embodiment 5

FIG. **41** is a conceptual sectional view of a luminescent device with a lens according to a fifth embodiment of the present invention, FIG. **42** is a perspective view of the lens according to the fifth embodiment, FIG. **43** is a conceptual view illustrating the operation of the total internal reflection lens according to the fifth embodiment, and FIG. **44** is a graph showing simulation results of the luminescent device according to the fifth embodiment.

Referring to FIGS. **41**, **42** and **43**, the lens of this embodiment comprises a first total reflection surface **4121** with a V-shaped section and a certain slope with respect to a central axis x; a second total reflection surface **4122** with a slope smaller than that of the first total reflection surface **4121**; a linear first refractive surface **4123***a* extending downward from a periphery of the second total reflection surface **4122** in a direction parallel to the central axis x; a linear second refractive surface **4123***b* extending from a periphery of the first refractive surface **4123***a* in the direction perpendicular to the central axis x; and a curved third refractive surface **4123***c* extending downward from a periphery of the second refractive surface **4123***b*.

As shown in FIGS. **41** and **42**, assuming that the diameter of the entire lens **4120** is 1, the maximum diameter of the first total reflection surface **4121** is 1/12 to 1/6, and the maximum diameter of the second total reflection surface **4122** is 1/7 to 1/3. The maximum diameter of the second refractive surface **4123***b* is 1/6 to 2/3, and the width of the second refractive surface **4123***b* is 1/12 to 1/6 of the diameter of the lens **4120**. The diameter of the third refractive surface **4123***c* is the same as the entire lens.

Further, assuming that the height of the lens **4120** is 1, the height of the first total reflection surface **4121** is 1/4 to 3/4; the height of the second total reflection surface **4122** is 1/6 to 1/4; the height of the first refractive surface **4123***a* is 1/12 to 1/8; and the height of the third refractive surface **4123***c* is 7/8 to 11/12. Here, the third refractive surface **4123***c* is made in the form of an ellipse as shown in the figures, and a ratio of minor and major axes of the ellipse is in a range of 1:4 or less. That is, it may be a circle.

Accordingly, as shown in FIG. **43**, light R**2** and R**4**, which is emitted from a light source (luminescent chip) and is then incident on the first and second total reflection surfaces **4121** and **4122**, are totally reflected, and emerges in a y-axis direction through the refractive surfaces **4123***a*, **4123***b* and **4123***c*. Light R**5**, R**3** and R**1** incident on the first to third refractive surfaces **4123***a*, **4123***b* and **4123***c* are refracted and emerges in the y-axis direction.

As such, the lens **4120** of the present invention is formed to have the total reflection surfaces with different slopes at a central portion thereof, and the rounded surface and the plurality of horizontal and vertical surfaces at an edge thereof, so that a peak value of luminous intensity is in a range of ±10 with respect to ±70 as shown in FIG. **44**.

In FIG. **44**, a lens **4120** with a refractive index of 1.5 was used such that an angle defined by the first total reflection surface **4121** and light emitted from the luminescent chip **4110** became about 50 degrees greater than a critical angle, and an angle defined by the second total reflection surface **4122** and light emitted from the luminescent chip **4110** became about 43 degrees. Then, luminous intensity is simulated in a range of +90 to −90 with respect to a region where the luminescent chip is located, and the results are shown in the graph.

As shown in the graph of FIG. **44**, the luminous intensity is the highest in the vicinity of ±70 degrees. That is, the luminous intensity is about 1.0 at +70 degrees and about 0.97 at −70 degrees. Further, the luminous intensity is not greater than 0.2 within ±40 degrees.

The invention claimed is:

1. A lens, comprising:

a body;

a total reflection surface with a total reflection slope with respect to a central axis of the body; and

at least one of a linear refractive surface and a curved refractive surface formed to extend away from the central axis and beyond a periphery of the total reflection surface.

2. The lens as claimed in claim **1**, wherein the refractive surface comprises:

a linear refractive surface formed by being bent at the periphery of the total reflection surface; and

a curved refractive surface formed to extend from a periphery of the linear refractive surface.

3. The lens as claimed in claim **1**, wherein the refractive surface comprises:

a curved refractive surface formed to extend from the periphery of the total reflection surface; and

a linear refractive surface formed by being bent at a periphery of the curved refractive surface.

4. The lens as claimed in any one of claims **1** to **3**, wherein the curved refractive surface takes the shape of an ellipse, and a ratio of minor and major axes of the ellipse is 1:4 or less.

5. The lens as claimed in any one of claims **1** to **3**, wherein the linear refractive surface is bent more than once.

6. The lens as claimed in claim **1**, wherein the total reflection surface comprises:

a first total reflection surface having a section in the form of a V-shaped recess with a predetermined slope; and

a second total reflection surface extending upward from a periphery of the first total reflection surface and formed to be sloped with a gradient smaller than that of the first total reflection surface.

7. The lens as claimed in claim **1**, wherein the refractive index of the body is 1.2 to 2.0.

8. A luminescent device, comprising:

a package housing with an opening and a through-hole exposed by the opening;

a lead terminal having an inner portion exposed within the opening of the package housing and an outer portion extending from the inner portion and protruding to the outside of the package housing;

a heat sink coupled to a lower portion of the package housing and having a portion exposed through the opening; and

a lens including a total reflection surface encapsulating the package housing and having a total reflection slope with respect to a central axis of a body of the lens, and a refractive surface formed to extend away from the central axis and beyond a periphery of the total reflection surface.

9. The luminescent device as claimed in claim **8**, wherein the package housing comprises first and second housings mutually coupled to each other with the lead terminal interposed therebetween, and the opening is formed in the first housing.

10. The luminescent device as claimed in claim **8**, wherein the heat sink comprises:

a heat sink body corresponding to a bottom surface of the package housing; and

an insertion projection protruding upward from a central portion of the heat sink body and inserted into the through-hole of the package housing.

11. The luminescent device as claimed in claim **10**, wherein the heat sink has a coupling projection on at least one of the heat sink body and the insertion projection.

12. A luminescent device, comprising:

a heat sink support ring;

a heat sink inserted into the support ring;

at least two lead terminals arranged at both sides of the support ring while being spaced apart from the support ring and the heat sink;

a package body for molding the heat sink and the lead terminals to support them, the package body having an opening through which an upper portion of the heat sink and portions of the lead terminals are exposed; and

a lens including a total reflection surface encapsulating the package body and having a total reflection slope with respect to a central axis of a body of the lens, and a refractive surface formed to extend away from the central axis and beyond a periphery edge of the total reflection surface.

13. The luminescent device as claimed in claim **12**, wherein the heat sink has a base and a projection protruding upward from the base at the center thereof, and the projection is inserted into the support ring.

14. The luminescent device as claimed in claim **13**, wherein the heat sink further comprises a support ring-receiving groove in a side surface of the projection so that the support ring-receiving groove can be fastened to the support ring.

15. The luminescent device as claimed in claim **12**, wherein the package body is a plastic resin body formed by insert-molding a thermosetting or thermoplastic resin after the heat sink is inserted into the support ring.

* * * * *