US 20040140543A1

(19) United States

(12) Patent Application Publication

(10) Pub. No.: US 2004/0140543 A1

(43) Pub. Date: Jul. 22, 2004

Elpedes et al.

(54) ACCURATE ALIGNMENT OF AN LED ASSEMBLY

(76) Inventors: **Cresente S. Elpedes**, San Jose, CA (US); **Zainul Fiteri bin Aziz**, Penang (MY); **Paul S. Martin**, Pleasanton, CA (US)

Correspondence Address:
PATENT LAW GROUP LLP
2635 NORTH FIRST STREET
SUITE 223
SAN JOSE, CA 95134 (US)

(21) Appl. No.: 10/346,535

(22) Filed: Jan. 16, 2003

Publication Classification

(51) Int. Cl.[7] H01L 23/495

(52) U.S. Cl. 257/676

(57) ABSTRACT

An LED assembly includes a heat sink and a submount. The heat sink has a top mating surface that is solder wettable, and the submount has a bottom mating surface that is solder wettable. The top and the bottom mating surfaces have substantially the same shape and area. The submount is soldered atop the heat sink. During solder reflow, the molten solder causes the submount to align with the top mating surface of the heat sink. The LED assembly may further include a substrate having a top mating surface, and the heat sink may further include a bottom mating surface. The top and bottom mating surfaces have substantially the same shape and area. The heat sink is soldered atop the substrate. During solder reflow, the molten solder causes the heat sink to align with the top mating surface of the substrate.

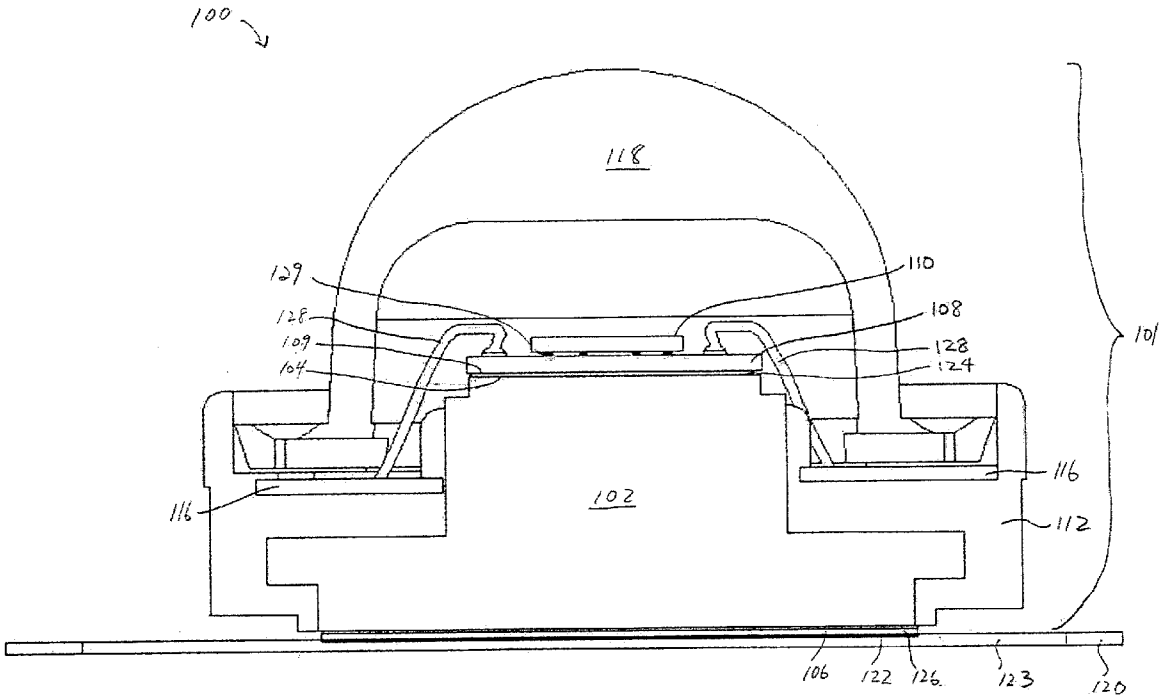

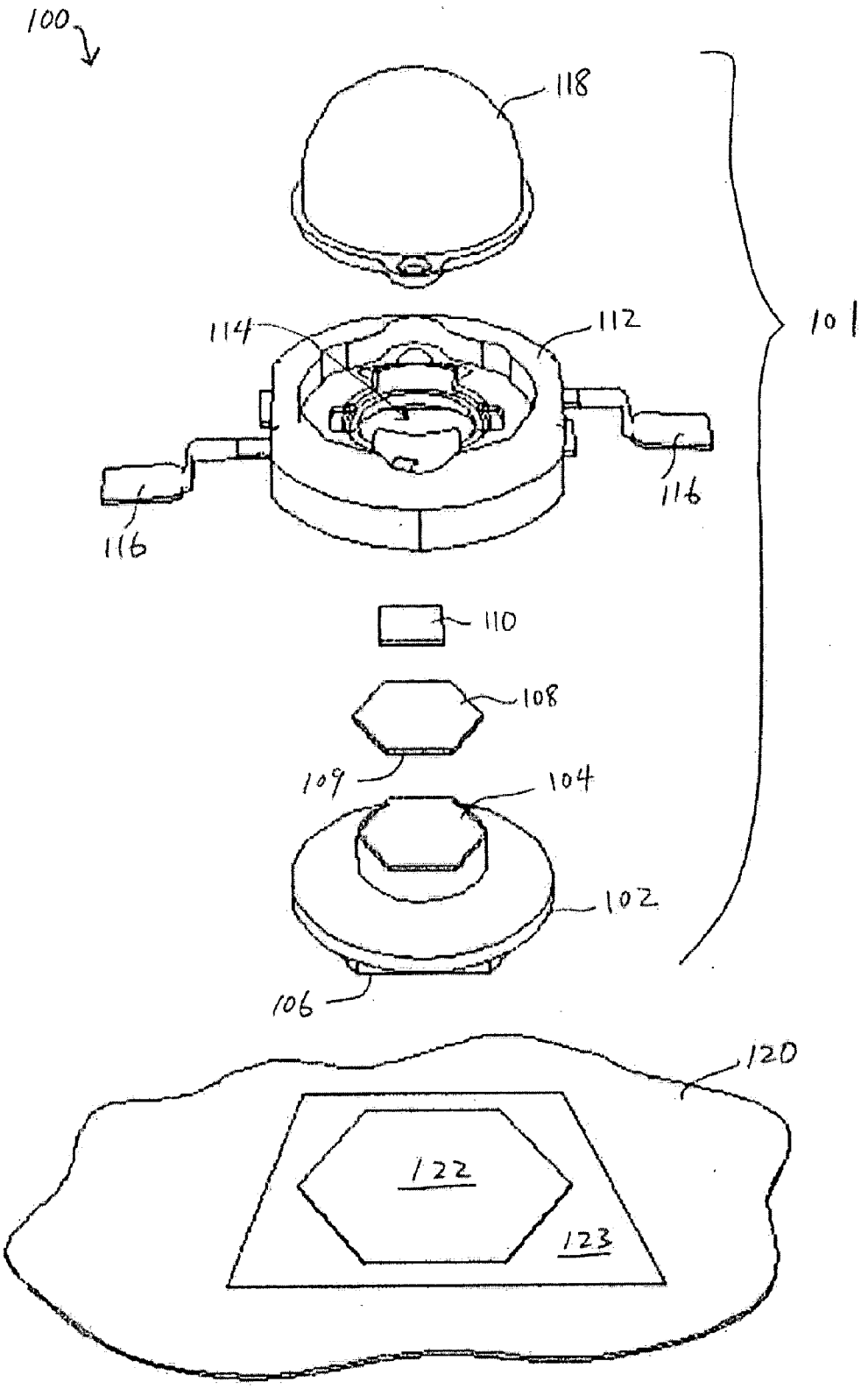

Fig. 1A

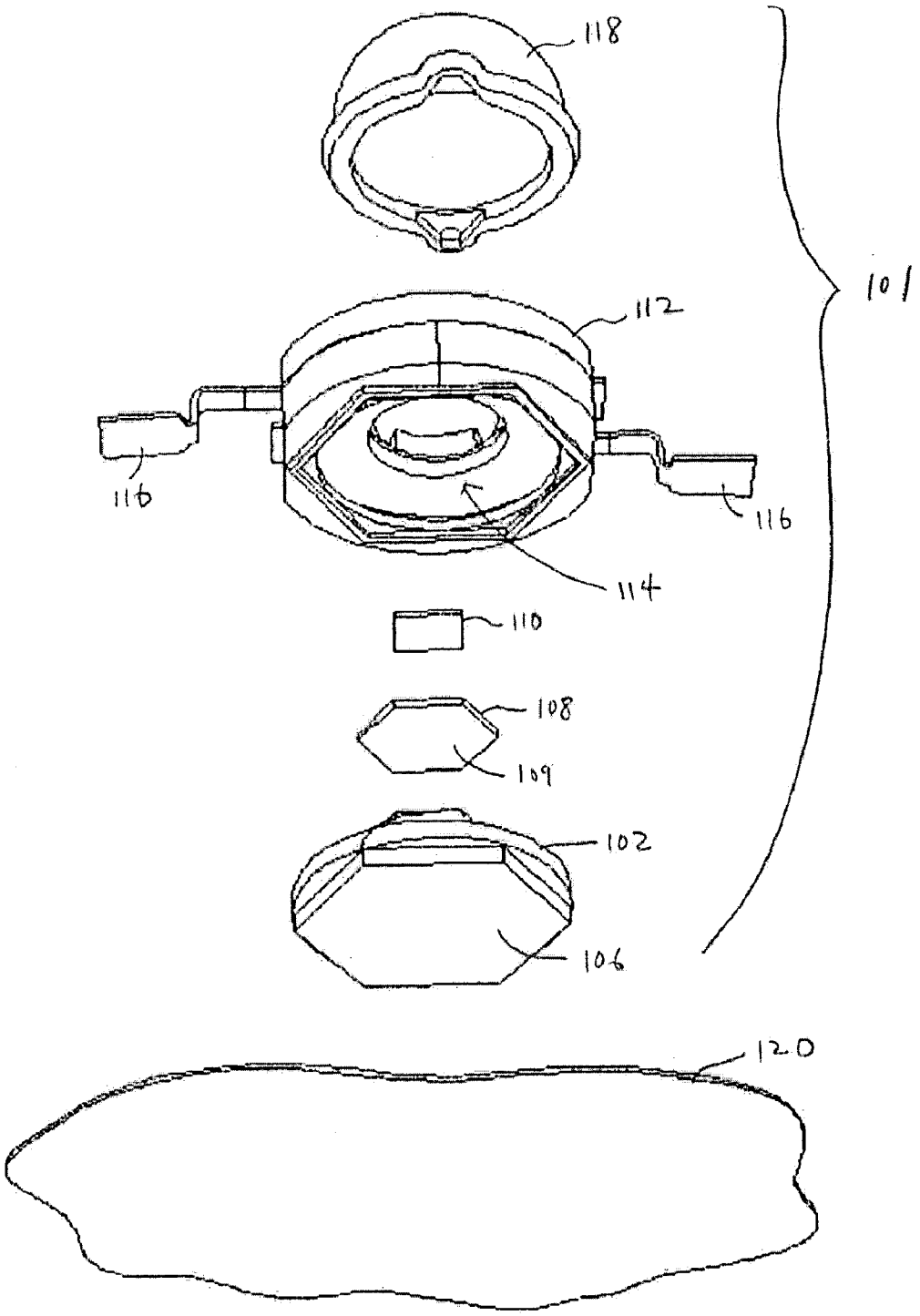

Fig. 1B

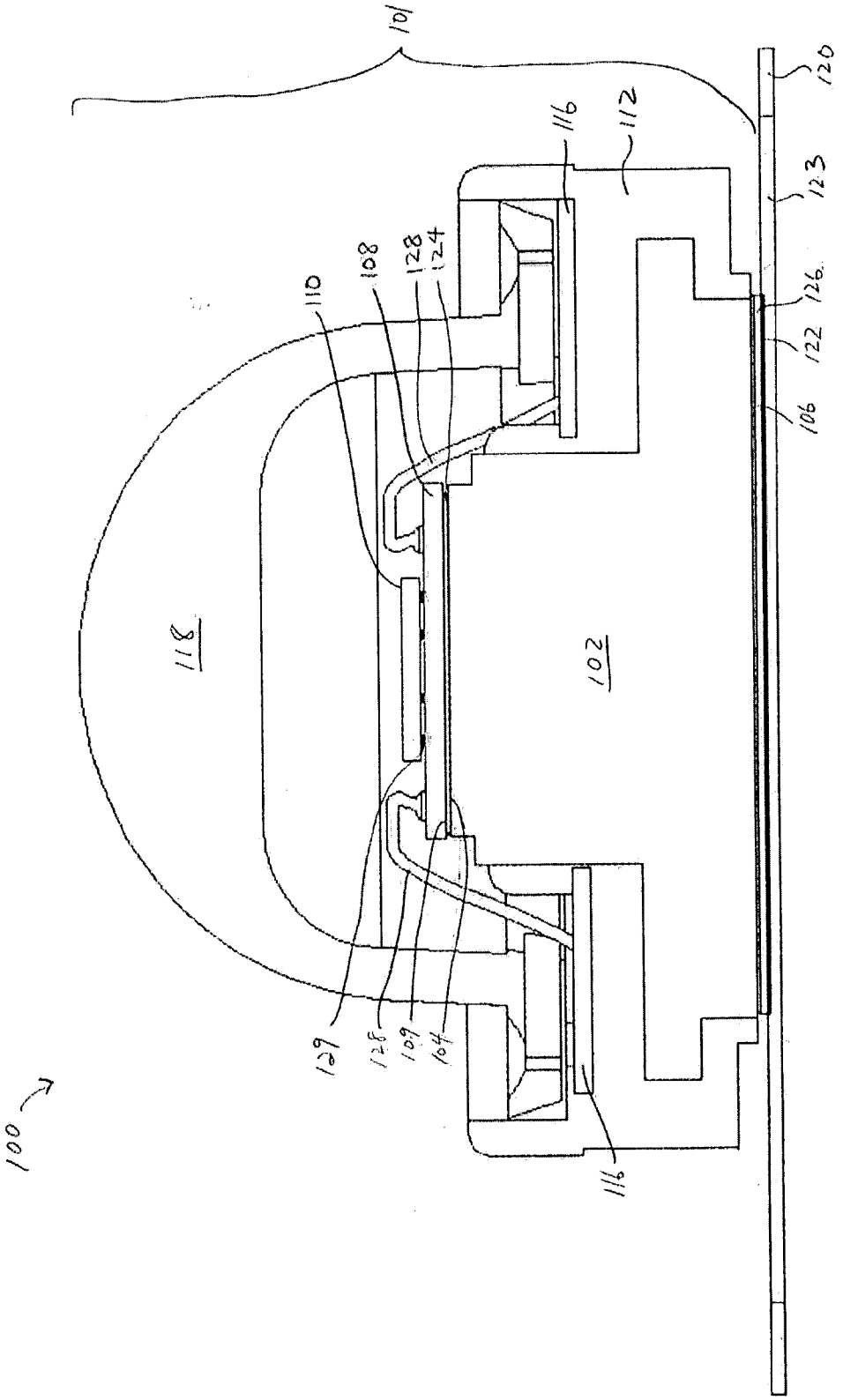
101
120
123
126
122
106
116
112
108
128
124
110
118
102
129
128
109
104
116
100

Fig. 2

ACCURATE ALIGNMENT OF AN LED ASSEMBLY

FIELD OF INVENTION

[0001] This invention relates to LEDs (light emitting diodes), and specifically to the accurate mounting of LEDs.

DESCRIPTION OF RELATED ART

[0002] Optical light sources such as III-nitride LEDs are sometimes mounted in a "flip chip" approach on an intermediate material or submount such as silicon. The entire package is designed to enhance the total light generating capability as well as for low thermal resistance to allow for high current density operation. Usually an epoxy compound is used to attach the submount onto a heat sink to provide support and a thermal path between the flip chip device and the LED package. A similar epoxy compound is then used to attach the LED package to the customer's wiring board. Epoxy attached devices, however, have various drawbacks: (a) the epoxy has an inherently weak thermal conducting property that leads to higher package thermal resistance; (b) poor alignment between the mating parts that leads to compromised optical performance of the device; and (c) formation of a fillet on the side of the chip that can lead to an electrical short. Thus, what is needed is an LED assembly that addresses these problems.

SUMMARY

[0003] In one embodiment of the invention, an LED assembly includes a heat sink and a submount. The heat sink has a top mating surface that is solder wettable and the submount has a bottom mating surface that is solder wettable. The top and bottom mating surfaces have substantially the same shape and area. The submount is soldered atop the heat sink. During a reflow process, the molten solder causes the submount to align with the top mating surface of the heat sink.

[0004] In one embodiment, the assembly further includes a substrate having a second top mating surface that is solder wettable, and the heat sink further includes a second bottom mating surface that is solder wettable. The second top and bottom mating surfaces have substantially the same shape and area. The heat sink is soldered atop the substrate. During the reflow process, the molten solder causes the heat sink to align with the second top mating surface of the substrate.

BRIEF DESCRIPTION OF THE DRAWINGS

[0005] **FIGS. 1A and 1B** illustrate exploded views of an LED package **100** in one embodiment.

[0006] **FIG. 2** illustrates a cross-section of LED package **100** in the embodiment.

DETAILED DESCRIPTION

[0007] In one embodiment of the invention, a submount is mounted on a heat sink with solder instead of epoxy. The submount has a solderable bottom mating surface and the heat sink has a solderable top mating surface of substantially the same shape and area. During a solder reflow, the molten solder causes the submount to align with the heat sink. Furthermore, the heat sink is mounted on a substrate with solder instead of epoxy. The heat sink has a solderable bottom mating surface and the substrate has a solderable top mating surface of substantially the same shape and area. Again, during a solder reflow, the molten solder causes the heat sink to align with the substrate.

[0008] **FIGS. 1A and 1B** illustrate exploded views of an LED assembly **100** in one embodiment. **FIG. 2** illustrates a cross-section view of an assembled LED assembly **100**. LED assembly **100** includes an LED package **101** and a substrate **120**.

[0009] LED package **101** includes an LED die **110** that is mounted on a submount **108**. Submount **108** may be electrically conductive or insulating. Submount **108** may be made of silicon, copper, silver, diamond, aluminum, tungsten, molybdenum, beryllium, alumina, aluminum nitride, beryllium oxide, boron nitride or other thermally conductive materials, compounds, or composites. In the present embodiment, LED die **110** is bonded to submount **108** by soldering a ball grid array on submount **108** to contact pads on LED die **110** with a solder **129** (**FIG. 2**). Submount **108** is formed with conductive traces that couple LED die **110** to bond wire contacts. Zener diodes may be formed in the path of the traces to protect against electrostatic discharge.

[0010] Submount **108** is mounted on a heat sink **102** (also called a "slug"). Slug **102** may be made of silicon, copper, silver, diamond, aluminum, tungsten, molybdenum, beryllium, alumina, aluminum nitride, beryllium oxide, boron nitride or other thermally conductive materials, compounds, or composites. Slug **102** has a top mating surface **104** (shown in **FIGS. 1A and 2**) and a bottom mating surface **106** that are solder wettable. If slug **102** is an inherently non-wettable material, mating surfaces **104** and **106** can be made wettable by depositing a layer of wettable material such as silver, nickel, gold, tin, copper, or palladium on slug **102**. In the present embodiment, mating surfaces **104** and **106** are raised surfaces of slug **102**. In other embodiments, mating surfaces **104** and **106** may be wettable surfaces that are level and contained within non-wettable surfaces. If slug **102** is an inherently wettable material, mating surfaces **104** and **106** can be defined by a layer of non-wettable material such as a solder mask or an oxide deposited on slug **102**.

[0011] A solder paste is deposited on mating surface **104**, and submount **108** is placed on the solder paste atop mating surface **104**. Submount **108** has a bottom mating surface **109** that is solder wettable and has substantially the same shape and size as mating surface **104**. If submount **108** is an inherently non-wettable material, mating surface **109** can be made wettable by depositing a layer of wettable material such as silver, nickel, gold, tin, copper, or palladium on the bottom of submount **108**. The solder paste is heated in a conventional reflow process. As mating surface **109** has substantially the same shape and area as mating surface **104**, the molten solder aligns mating surface **109** to mating surface **104** by the surface tension of the molten solder. In one embodiment, two surfaces have substantially the same shape and area when the smaller circumference is 50% or more of the larger circumference. In another embodiment, two surfaces have substantially the same shape and area when the molten solder can align them with an accuracy of 20 microns or better.

[0012] At the end of the reflow process, the solder paste becomes a solder **124** (**FIG. 2**) that bonds submount **108** to mating surface **104**. Thus, LED die **110** can be accurately aligned and bonded to slug **102**. In the present embodiment,

mating surfaces **109** and **104** are both hexagons. In other embodiments, alternative geometric features are used provided that the mating surfaces are substantially the same shape and size.

[**0013**] LED package **100** further includes a body **112** that defines a cavity **114 (FIGS. 1A and 1B)**. Body **112** may be made of any dielectric material such as plastic. Slug **102** is mounted to body **112** inside cavity **114**. Body **112** includes leads **116** that pass electrical signals between LED package **100** and other components. Bond wires **128 (FIG. 2)** couple submount **108** to leads **116**. Body **112** further includes a lens **118** fitted on body **112**. An encapsulant may fill lens **118** to protect LED die **110**.

[**0014**] LED package **100** can be mounted on a thermally conductive substrate **120**. Substrate **120** has a top mating surface **122** that is solder wettable. In the present embodiment, mating surface **122** is level and contained within a non-wettable surface **123**. Mating surface **122** can be made wettable by depositing a layer of wettable material such as silver, nickel, gold, tin, copper, or palladium on substrate **120**. Non-wettable surface **123** can be made by depositing a layer of non-wettable material such as a solder mask or an oxide on substrate **120**. In other embodiments, mating surface **122** may be a raised surface of substrate **120**.

[**0015**] A solder paste is deposited on mating surface **122**, and slug **102** is placed on the solder paste atop mating surface **122**. The slug mating surface **106** has substantially the same shape and area as mating surface **122**. The solder paste is heated in a conventional reflow process. As mating surface **106** has substantially the same shape and area as mating surface **122**, the molten solder aligns mating surface **106** to mating surface **122**. At the end of the reflow process, the solder paste becomes a solder **126 (FIG. 2)** that bonds slug LED package **101** to mating surface **122**. Thus, LED package **101** can be accurately aligned and bonded to substrate **120**. In the present embodiment, mating surfaces **106** and **122** are both hexagons. In other embodiments, alternative geometric features are used provided that the mating surfaces are substantially the same shape and size.

[**0016**] Solders **124** and **126** have lower thermal resistances than epoxy so they allow more heat to be conducted away from LED package **100** to substrate **120** for higher temperature operation. Solders **124** and **126** are also more robust and reliable at high temperature operation than epoxy. In addition, solder **124** is also less likely to short submount **108** to slug **102** because any excessive solder will flow down the perimeter of raised mating surface **104** and away from the conductive top surface of submount **108** and the attached bond wires **128**.

[**0017**] In one embodiment, the liquidous temperature of solder **129** is higher than that of solder **124**, and the liquidous temperature of solder **124** is higher than that of solder **126**. This prevents the subsequent reflow processes from disturbing the soldered parts from previous reflow processes.

[**0018**] The LED die need not be a flip chip to make use of the invention.

[**0019**] Various other adaptations and combinations of features of the embodiments disclosed are within the scope of the invention. For example, the solder paste may be applied to any one or both of the two wettable mating surfaces. Numerous embodiments are encompassed by the following claims.

What is claimed is:

1. An LED assembly, comprising:

a heat sink comprising a top mating surface that is solder wettable;

a submount comprising a bottom mating surface that is solder wettable and has substantially the same shape and area as the top mating surface, the submount being bonded atop the heat sink by a first solder; and

an LED die bonded atop the submount.

2. The assembly of claim 1, wherein the top mating surface and the bottom mating surface have a hexagon shape.

3. The assembly of claim 1, wherein the top mating surface is a raised surface.

4. The assembly of claim 1, further comprising:

an insulating body defining a cavity for receiving the heat sink;

metal leads attached to the insulating body; and

bond wires coupling the submount to the metal leads.

5. The assembly of claim 1, wherein the heat sink further comprises a second bottom mating surface that is solder wettable.

6. The assembly of claim 5, wherein the second bottom mating surface is a raised surface.

7. The assembly of claim 5, further comprising a substrate comprising a second top mating surface that is solder wettable and has substantially the same shape and area as the second bottom mating surface, wherein the heat sink is bonded atop the substrate by a second solder.

8. The assembly of claim 7, wherein the second bottom mating surface and the second top mating surface have a hexagon shape.

9. The assembly of claim 1, wherein the LED die is a flip chip.

10. The assembly of claim 5, wherein the LED die includes contact pads, wherein the contact pads are bonded to conductors atop the submount by a third solder.

11. The assembly of claim 10, wherein the third solder has a higher liquidous temperature than the first solder, and the first solder has a higher liquidous temperature than the second solder.

12. The assembly of claim 1, wherein the heat sink is a thermally conducting slug.

13. The assembly of claim 1, wherein the top and the bottom mating surfaces have substantially the same shape and area when one circumference is at least 50% of another circumference.

14. The assembly of claim 1, wherein the top and bottom mating surfaces have substantially the same shape and area when the first solder aligns the top and bottom mating surfaces with an accuracy of at least 20 microns.

15. A method for assembling LED components, comprising:

mounting an LED die on a submount;

applying a first solder between a bottom mating surface of the submount and a top mating surface of a heat sink, wherein the bottom mating surface and the top mating surface have substantially the same shape and area; and

reflowing the first solder, whereby the submount and the heat sink are aligned and bonded together during reflowing.

16. The method of claim 15, wherein said applying a first solder comprises:

applying the first solder to the top mating surface of the heat sink; and

placing the bottom mating surface of the submount on the first solder atop the top mating surface of the heat sink.

17. The method of claim 15, further comprising:

applying a second solder between a second bottom mating surface of the heat sink and a second top mating surface of a substrate, wherein the second bottom mating surface and the second top mating surface have substantially the same shape and area; and

reflowing the second solder, whereby the heat sink and the substrate are aligned and bonded together during reflowing.

18. The method of claim 17, wherein said applying a second solder comprises:

applying the second solder to the second top mating surface of the substrate; and

placing the second bottom mating surface of the heat sink on the second solder atop the second top mating surface of the substrate.

19. The method of claim 17, wherein said reflowing the first solder occurs at a higher temperature than said reflowing the second solder.

20. The method of claim 17, wherein said mounting an LED die on a submount comprises:

applying a third solder between the LED die and the submount; and

reflowing the third solder, whereby the LED die and the submount are bonded together during reflowing.

21. The method of claim 20, wherein said reflowing the third solder occurs at a higher temperature than said reflowing the first solder.

22. The method of claim 15, wherein the bottom mating surface and the top mating surface have a hexagon shape.

23. The method of claim 17, wherein the second bottom mating surface and the second top mating surface have a hexagon shape.

24. The method of claim 17, wherein the heat sink is a thermally conducting slug.

25. The assembly of claim 15, wherein the top and the bottom mating surfaces have substantially the same shape and area when one circumference is at least 50% of another circumference.

26. The assembly of claim 15, wherein the top and bottom mating surfaces have substantially the same shape and area when the first solder aligns the top and bottom mating surfaces with an accuracy of at least 20 microns.

* * * * *