US007170151B2

(12) **United States Patent**
Elpedes et al.

(10) **Patent No.: US 7,170,151 B2**
(45) **Date of Patent: Jan. 30, 2007**

(54) **ACCURATE ALIGNMENT OF AN LED ASSEMBLY**

(75) Inventors: **Cresente S. Elpedes**, San Jose, CA (US); **Zainul Fiteri bin Aziz**, Penang (MY); **Paul S. Martin**, Pleasanton, CA (US)

(73) Assignee: **Philips Lumileds Lighting Company, LLC**, San Jose, CA (US)

(*) Notice: Subject to any disclaimer, the term of this patent is extended or adjusted under 35 U.S.C. 154(b) by 0 days.

(21) Appl. No.: **10/346,535**

(22) Filed: **Jan. 16, 2003**

(65) **Prior Publication Data**

US 2004/0140543 A1 Jul. 22, 2004

(51) **Int. Cl.**
H01L 23/495 (2006.01)

(52) **U.S. Cl.** **257/676**; 257/675; 257/678; 257/706; 257/707; 257/711; 257/99; 257/100; 257/98; 257/431; 438/123

(58) **Field of Classification Search** 257/679, 257/675, 670, 706, 707, 711, 676, 678, 99, 257/100, 98, 431; 438/123
See application file for complete search history.

(56) **References Cited**

U.S. PATENT DOCUMENTS

5,606,182	A	2/1997	Yoshida et al.	
5,825,794	A *	10/1998	Ogino et al.	372/36
6,168,070	B1 *	1/2001	Sinkunas	228/179.1
6,188,130	B1 *	2/2001	Ramirez et al.	257/706
6,274,924	B1	8/2001	Carey et al.	257/676
6,335,548	B1 *	1/2002	Roberts et al.	257/98
6,498,355	B1 *	12/2002	Harrah et al.	257/99
6,642,652	B2 *	11/2003	Collins et al.	313/512
6,791,181	B2 *	9/2004	Horie et al.	257/706
2001/0032985	A1	10/2001	Bhat et al.	
2002/0063329	A1 *	5/2002	Horie et al.	
2002/0124375	A1	9/2002	Atia et al.	
2003/0168720	A1 *	9/2003	Kamada	

FOREIGN PATENT DOCUMENTS

EP	0 989 794 A2	3/2000
GB	2 062 346 A	5/1981
JP	59-79588	8/1984

OTHER PUBLICATIONS

European Search Report, 4 pages.

* cited by examiner

Primary Examiner—Eddie C. Lee
Assistant Examiner—Junghwa Im
(74) *Attorney, Agent, or Firm*—Patent Law Group LLP; David C. Hsia

(57) **ABSTRACT**

An LED assembly includes a heat sink and a submount. The heat sink has a top mating surface that is solder wettable, and the submount has a bottom mating surface that is solder wettable. The top and the bottom mating surfaces have substantially the same shape and area. The submount is soldered atop the heat sink. During solder reflow, the molten solder causes the submount to align with the top mating surface of the heat sink. The LED assembly may further include a substrate having a top mating surface, and the heat sink may further include a bottom mating surface. The top and bottom mating surfaces have substantially the same shape and area. The heat sink is soldered atop the substrate. During solder reflow, the molten solder causes the heat sink to align with the top mating surface of the substrate.

7 Claims, 3 Drawing Sheets

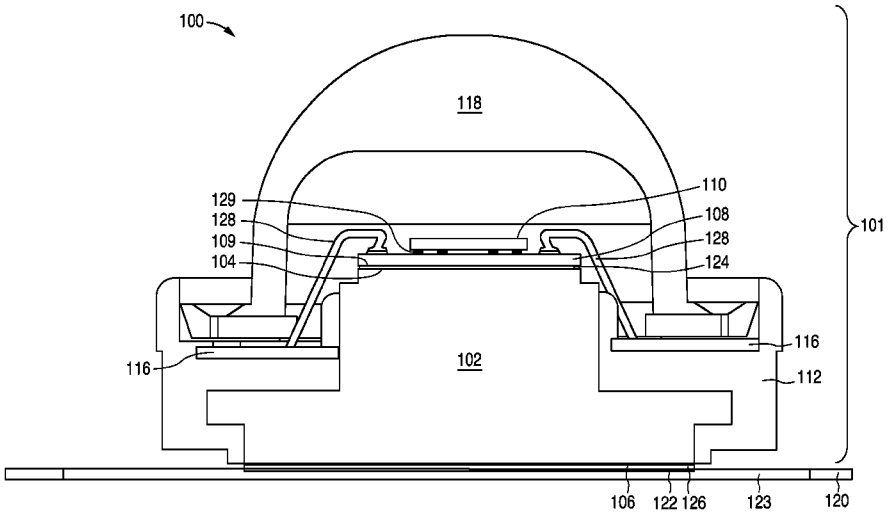

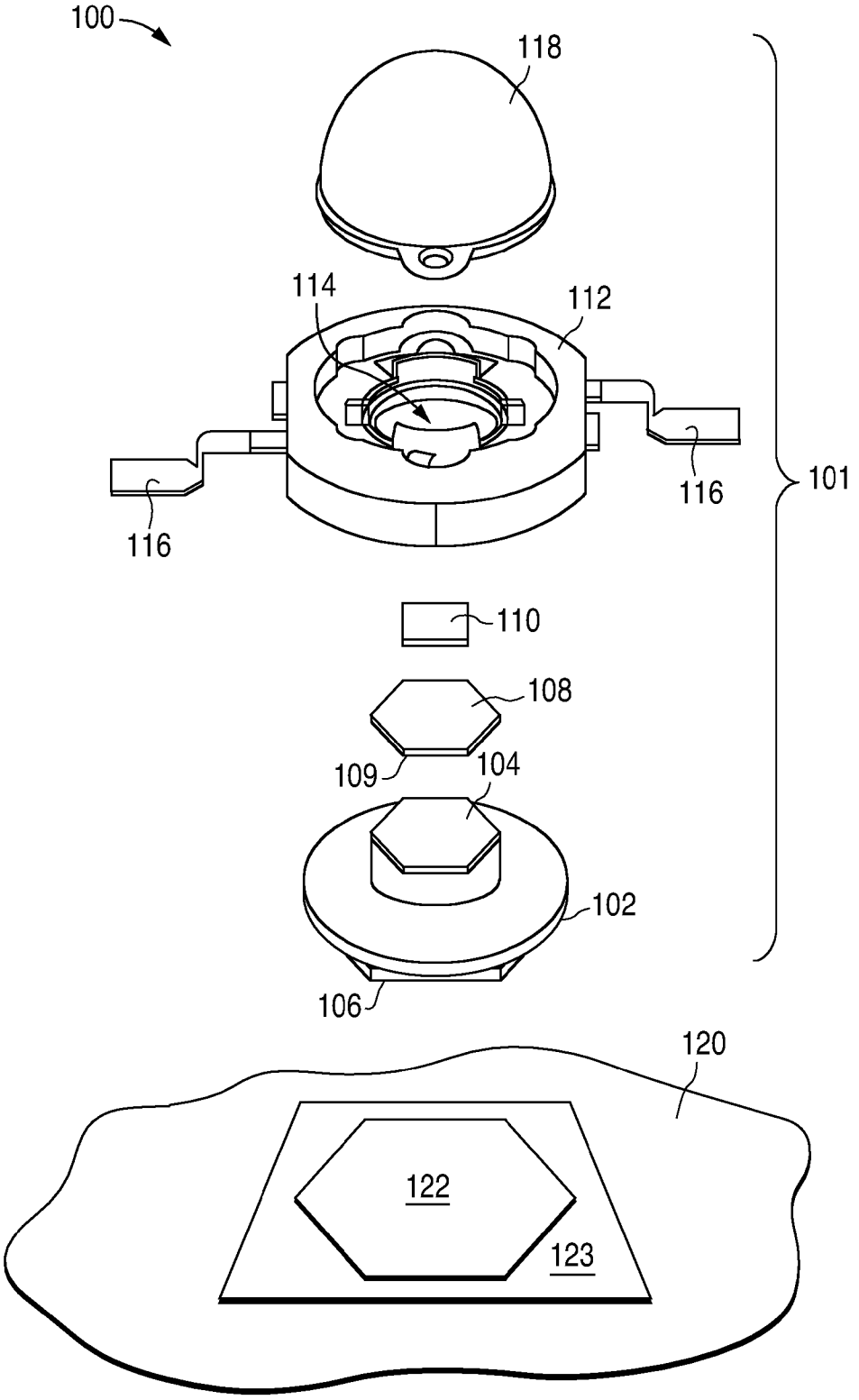

FIG. 1A

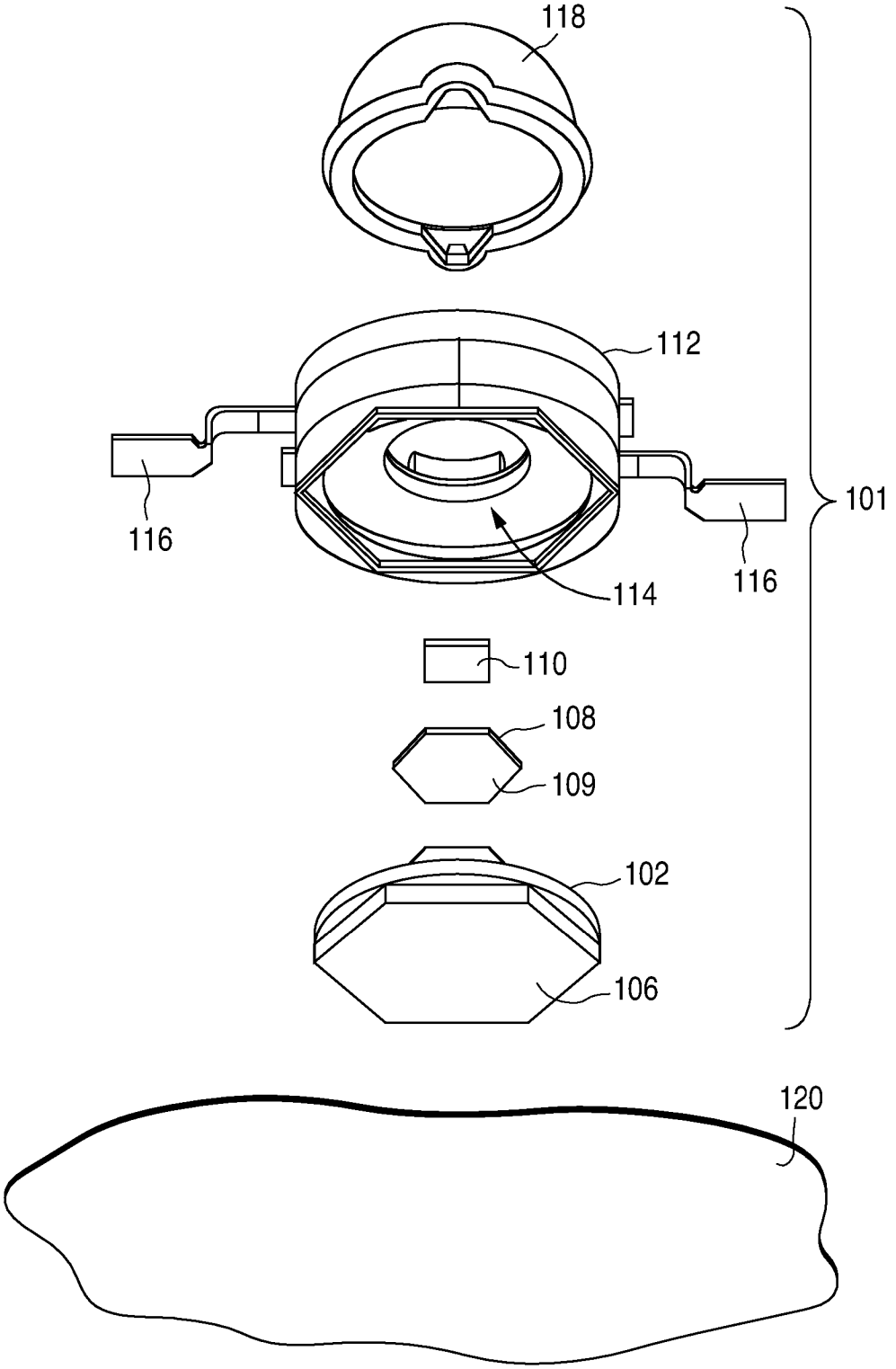

FIG. 1B

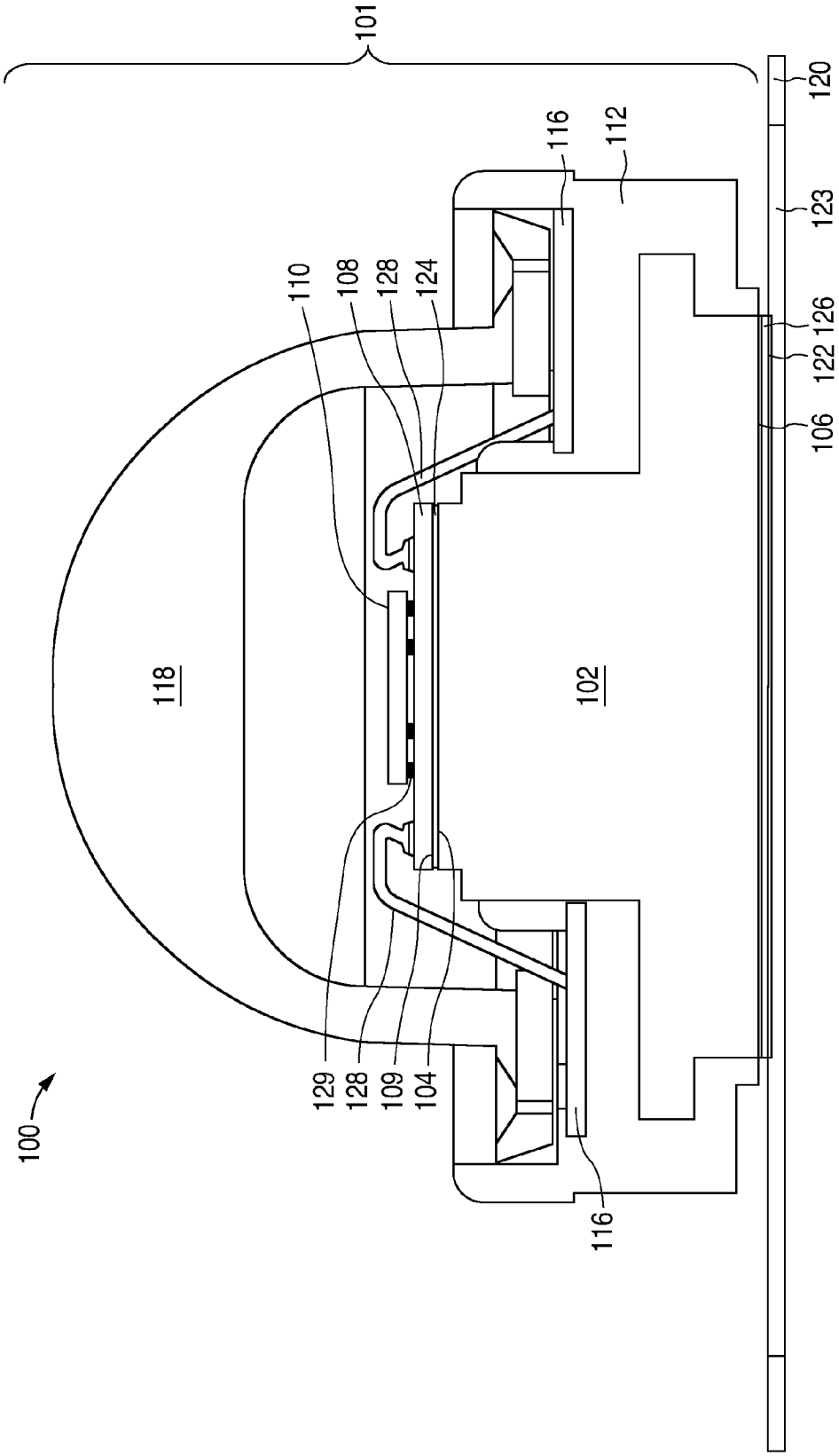
101
120
116
112
123
110
108
128
124
126
122
106
118
102
129
128
109
104
100
116

FIG. 2

ACCURATE ALIGNMENT OF AN LED ASSEMBLY

FIELD OF INVENTION

This invention relates to LEDs (light emitting diodes), and specifically to the accurate mounting of LEDs.

DESCRIPTION OF RELATED ART

Optical light sources such as III-nitride LEDs are sometimes mounted in a "flip chip" approach on an intermediate material or submount such as silicon. The entire package is designed to enhance the total light generating capability as well as for low thermal resistance to allow for high current density operation. Usually an epoxy compound is used to attach the submount onto a heat sink to provide support and a thermal path between the flip chip device and the LED package. A similar epoxy compound is then used to attach the LED package to the customer's wiring board. Epoxy attached devices, however, have various drawbacks: (a) the epoxy has an inherently weak thermal conducting property that leads to higher package thermal resistance; (b) poor alignment between the mating parts that leads to compromised optical performance of the device; and (c) formation of a fillet on the side of the chip that can lead to an electrical short. Thus, what is needed is an LED assembly that addresses these problems.

SUMMARY

In one embodiment of the invention, an LED assembly includes a heat sink and a submount. The heat sink has a top mating surface that is solder wettable and the submount has a bottom mating surface that is solder wettable. The top and bottom mating surfaces have substantially the same shape and area. The submount is soldered atop the heat sink. During a reflow process, the molten solder causes the submount to align with the top mating surface of the heat sink.

In one embodiment, the assembly further includes a substrate having a second top mating surface that is solder wettable, and the heat sink further includes a second bottom mating surface that is solder wettable. The second top and bottom mating surfaces have substantially the same shape and area. The heat sink is soldered atop the substrate. During the reflow process, the molten solder causes the heat sink to align with the second top mating surface of the substrate.

BRIEF DESCRIPTION OF THE DRAWINGS

FIGS. **1**A and **1**B illustrate exploded views of an LED package **100** in one embodiment.

FIG. **2** illustrates a cross-section of LED package **100** in the embodiment.

DETAILED DESCRIPTION

In one embodiment of the invention, a submount is mounted on a heat sink with solder instead of epoxy. The submount has a solderable bottom mating surface and the heat sink has a solderable top mating surface of substantially the same shape and area. During a solder reflow, the molten solder causes the submount to align with the heat sink. Furthermore, the heat sink is mounted on a substrate with solder instead of epoxy. The heat sink has a solderable bottom mating surface and the substrate has a solderable top mating surface of substantially the same shape and area. Again, during a solder reflow, the molten solder causes the heat sink to align with the substrate.

FIGS. **1**A and **1**B illustrate exploded views of an LED assembly **100** in one embodiment. FIG. **2** illustrates a cross-section view of an assembled LED assembly **100**. LED assembly **100** includes an LED package **101** and a substrate **120**.

LED package **101** includes an LED die **110** that is mounted on a submount **108**. Submount **108** may be electrically conductive or insulating. Submount **108** may be made of silicon, copper, silver, diamond, aluminum, tungsten, molybdenum, beryllium, alumina, aluminum nitride, beryllium oxide, boron nitride or other thermally conductive materials, compounds, or composites. In the present embodiment, LED die **110** is bonded to submount **108** by soldering a ball grid array on submount **108** to contact pads on LED die **110** with a solder **129** (FIG. **2**). Submount **108** is formed with conductive traces that couple LED die **110** to bond wire contacts. Zener diodes may be formed in the path of the traces to protect against electrostatic discharge.

Submount **108** is mounted on a heat sink **102** (also called a "slug"). Slug **102** may be made of silicon, copper, silver, diamond, aluminum, tungsten, molybdenum, beryllium, alumina, aluminum nitride, beryllium oxide, boron nitride or other thermally conductive materials, compounds, or composites. Slug **102** has a top mating surface **104** (shown in FIGS. **1**A and **2**) and a bottom mating surface **106** that are solder wettable. If slug **102** is an inherently non-wettable material, mating surfaces **104** and **106** can be made wettable by depositing a layer of wettable material such as silver, nickel, gold, tin, copper, or palladium on slug **102**. In the present embodiment, mating surfaces **104** and **106** are raised surfaces of slug **102**. In other embodiments, mating surfaces **104** and **106** may be wettable surfaces that are level and contained within non-wettable surfaces. If slug **102** is an inherently wettable material, mating surfaces **104** and **106** can be defined by a layer of non-wettable material such as a solder mask or an oxide deposited on slug **102**.

A solder paste is deposited on mating surface **104**, and submount **108** is placed on the solder paste atop mating surface **104**. Submount **108** has a bottom mating surface **109** that is solder wettable and has substantially the same shape and size as mating surface **104**. If submount **108** is an inherently non-wettable material, mating surface **109** can be made wettable by depositing a layer of wettable material such as silver, nickel, gold, tin, copper, or palladium on the bottom of submount **108**. The solder paste is heated in a conventional reflow process. As mating surface **109** has substantially the same shape and area as mating surface **104**, the molten solder aligns mating surface **109** to mating surface **104** by the surface tension of the molten solder. In one embodiment, two surfaces have substantially the same shape and area when the smaller circumference is 50% or more of the larger circumference. In another embodiment, two surfaces have substantially the same shape and area when the molten solder can align them with an accuracy of 20 microns or better.

At the end of the reflow process, the solder paste becomes a solder **124** (FIG. **2**) that bonds submount **108** to mating surface **104**. Thus, LED die **110** can be accurately aligned and bonded to slug **102**. In the present embodiment, mating surfaces **109** and **104** are both hexagons. In other embodiments, alternative geometric features are used provided that the mating surfaces are substantially the same shape and size.

LED package **100** further includes a body **112** that defines a cavity **114** (FIGS. **1**A and **1**B). Body **112** may be made of any dielectric material such as plastic. Slug **102** is mounted to body **112** inside cavity **114**. Body **112** includes leads **116** that pass electrical signals between LED package **100** and other components. Bond wires **128** (FIG. **2**) couple submount **108** to leads **116**. Body **112** further includes a lens **118** fitted on body **112**. An encapsulant may fill lens **118** to protect LED die **110**.

LED package **100** can be mounted on a thermally conductive substrate **120**. Substrate **120** has a top mating surface **122** that is solder wettable. In the present embodiment, mating surface **122** is level and contained within a non-wettable surface **123**. Mating surface **122** can be made wettable by depositing a layer of wettable material such as silver, nickel, gold, tin, copper, or palladium on substrate **120**. Non-wettable surface **123** can be made by depositing a layer of non-wettable material such as a solder mask or an oxide on substrate **120**. In other embodiments, mating surface **122** may be a raised surface of substrate **120**.

A solder paste is deposited on mating surface **122**, and slug **102** is placed on the solder paste atop mating surface **122**. The slug mating surface **106** has substantially the same shape and area as mating surface **122**. The solder paste is heated in a conventional reflow process. As mating surface **106** has substantially the same shape and area as mating surface **122**, the molten solder aligns mating surface **106** to mating surface **122**. At the end of the reflow process, the solder paste becomes a solder **126** (FIG. **2**) that bonds slug LED package **101** to mating surface **122**. Thus, LED package **101** can be accurately aligned and bonded to substrate **120**. In the present embodiment, mating surfaces **106** and **122** are both hexagons. In other embodiments, alternative geometric features are used provided that the mating surfaces are substantially the same shape and size.

Solders **124** and **126** have lower thermal resistances than epoxy so they allow more heat to be conducted away from LED package **100** to substrate **120** for higher temperature operation. Solders **124** and **126** are also more robust and reliable at high temperature operation than epoxy. In addition, solder **124** is also less likely to short submount **108** to slug **102** because any excessive solder will flow down the perimeter of raised mating surface **104** and away from the conductive top surface of submount **108** and the attached bond wires **128**.

In one embodiment, the liquidous temperature of solder **129** is higher than that of solder **124**, and the liquidous temperature of solder **124** is higher than that of solder **126**. This prevents the subsequent reflow processes from disturbing the soldered parts from previous reflow processes.

The LED die need not be a flip chip to make use of the invention.

Various other adaptations and combinations of features of the embodiments disclosed are within the scope of the invention. For example, the solder paste may be applied to any one or both of the two wettable mating surfaces. Numerous embodiments are encompassed by the following claims.

What is claimed is:

1. An LED assembly, comprising:

a substrate comprising a first top surface that is solder wettable;

a heat sink comprising a flange and a body protruding above the flange, the flange comprising a first bottom surface that is raised below the flange and solder wettable, the body comprising a second top surface that is raised above the body and solder wettable, the first bottom surface having substantially the same shape and area as the first top surface of the substrate, the heat sink being mounted atop the substrate by a first solder between the first bottom surface and the first top surface;

a submount comprising a second bottom surface that is solder wettable, the second bottom surface having substantially the same shape and area as the second top surface of the heat sink, the submount being mounted atop the heat sink by a second solder between the second bottom surface and the second top surface;

an LED die mounted atop the submount;

an insulating body defining a cavity for receiving the heat sink;

metal leads attached to the insulating body; and

bond wires coupling the submount to the metal leads.

2. The assembly of claim **1**, wherein at least one of the first top surface and the second top surface has a hexagon shape.

3. The assembly of claim **1**, wherein the LED die is a flip chip.

4. The assembly of claim **1**, wherein the LED die includes contact pads, wherein the contact pads are mounted to conductors atop the submount by a third solder.

5. The assembly of claim **4**, wherein the third solder has a higher liquidous temperature than the second solder, and the second solder has a higher liquidous temperature than the first solder.

6. The assembly of claim **1**, wherein at least one of(1) the first bottom surface and the first top surface and (2) the second bottom surface and the second top surface have substantially the same shape and area when one circumference is at least 50% of another circumference.

7. The assembly of claim **1**, wherein at least one of(1) the first bottom surface and the first top surface and (2) the second bottom surface and the second top surface have substantially the same shape and area when the first solder aligns the top and bottom mating surfaces with an accuracy of 20 microns or better.

* * * * *