PTO/SB/14 (08-05)
Approved for use through 07/31/2006. OMB 0651-0032
U.S. Patent and Trademark Office; U.S. DEPARTMENT OF COMMERCE
Under the Paperwork Reduction Act of 1995, no persons are required to respond to a collection of information unless it contains a valid OMB control number.

Application Data Sheet 37 CFR 1.76	Attorney Docket Number	3576-043
	Application Number	
Title of Invention	SIDE ILLUMINATION LENS AND LUMINESCENT DEVICE USING THE SAME	

The application data sheet is part of the provisional or nonprovisional application for which it is being submitted. The following form contains the bibliographic data arranged in a format specified by the United States Patent and Trademark Office as outlined in 37 CFR 1.76.
This document may be completed electronically and submitted to the Office in electronic format using the Electronic Filing System (EFS) or the document may be printed and included in a paper filed application.

Secrecy Order 37 CFR 5.2

☐ Portions or all of the application associated with this Application Data Sheet may fall under a Secrecy Order pursuant to 37 CFR 5.2 (Paper filers only. Applications that fall under Secrecy Order may not be filed electronically.)

Applicant Information:

Applicant 1 Remove

Applicant Authority ◉ Inventor ◯ Legal Representative under 35 U.S.C. 117 ◯ Party of Interest under 35 U.S.C. 118

Prefix	Given Name	Middle Name	Family Name	Suffix
	Do-Hyung		KIM	

Residence Information (Select One) ◯ US Residency ◉ Non US Residency ◯ Active US Military Service

City	Suwon, 440-720	**Country Of Residence**[i]	KR
Citizenship under 37 CFR 1.41(b)[i]	KR		

Mailing Address of Applicant:

Address 1	425-1604 Yeonggot Maeul Apt., Jeongja 3-Dong		
Address 2	Jangan-Gu,		
City	Suwon, 440-720	**State/Province**	
Postal Code		**Country**[i]	KR

Applicant 2 Remove

Applicant Authority ◉ Inventor ◯ Legal Representative under 35 U.S.C. 117 ◯ Party of Interest under 35 U.S.C. 118

Prefix	Given Name	Middle Name	Family Name	Suffix
	Chung-Hoon		LEE	

Residence Information (Select One) ◯ US Residency ◉ Non US Residency ◯ Active US Military Service

City	Gyeonggi-Do, 423-821	**Country Of Residence**[i]	KR
Citizenship under 37 CFR 1.41(b)[i]	KR		

Mailing Address of Applicant:

Address 1	28-2, Soha-Dong, Gwangmyeong-Si,		
Address 2			
City	Gyeonggi-Do, 423-821	**State/Province**	
Postal Code		**Country**[i]	KR

Applicant 3 Remove

Applicant Authority ◉ Inventor ◯ Legal Representative under 35 U.S.C. 117 ◯ Party of Interest under 35 U.S.C. 118

Prefix	Given Name	Middle Name	Family Name	Suffix
	Keon-Young		LEE	

Residence Information (Select One) ◯ US Residency ◉ Non US Residency ◯ Active US Military Service

City	Ansan 425-803	**Country Of Residence**[i]	KR

Under the Paperwork Reduction Act of 1995, no persons are required to respond to a collection of information unless it contains a valid OMB control number.

Application Data Sheet 37 CFR 1.76	Attorney Docket Number	3576-043
	Application Number	
Title of Invention	SIDE ILLUMINATION LENS AND LUMINESCENT DEVICE USING THE SAME	

Citizenship under 37 CFR 1.41(b) i	KR		
Mailing Address of Applicant:			
Address 1	Jung-won villa 3-101, Gojan 1-dong Danwon-Gu,		
Address 2			
City	Ansan 425-803	**State/Province**	
Postal Code		**Country**i	KR

Applicant 4 Remove

Applicant Authority	◉ Inventor	◯ Legal Representative under 35 U.S.C. 117	◯ Party of Interest under 35 U.S.C. 118

Prefix	Given Name	Middle Name	Family Name	Suffix
	Kwang-Il		PARK	

Residence Information (Select One)	◯ US Residency	◉ Non US Residency	◯ Active US Military Service
City	Seoul, 151-840	**Country Of Residence**i	KR
Citizenship under 37 CFR 1.41(b) i	KR		
Mailing Address of Applicant:			
Address 1	2-302 Seonwoo village, 909-19, Bongcheonbon-dong,		
Address 2	Gwanak-Gu,		
City	Seoul, 151-840	**State/Province**	
Postal Code		**Country**i	KR

All Inventors Must Be Listed - Additional Inventor Information blocks may be generated within this form by selecting the **Add** button. Add

Correspondence Information:

Enter either Customer Number or complete the Correspondence Information section below.
For further information see 37 CFR 1.33(a).

☐ **An Address is being provided for the correspondence Information of this application.**

Customer Number	20575	
Email Address	docketing@techlaw.com	Add Email Remove Email

Application Information:

Title of the Invention	SIDE ILLUMINATION LENS AND LUMINESCENT DEVICE USING THE SAME		
Attorney Docket Number	3576-043	**Small Entity Status Claimed**	☐
Application Type	Nonprovisional		
Subject Matter	Utility		
Suggested Class (if any)		**Sub Class (if any)**	
Suggested Technology Center (if any)			
Total Number of Drawing Sheets (if any)	29	**Suggested Figure for Publication (if any)**	4

Under the Paperwork Reduction Act of 1995, no persons are required to respond to a collection of information unless it contains a valid OMB control number.

Application Data Sheet 37 CFR 1.76	Attorney Docket Number	3576-043
	Application Number	
Title of Invention	SIDE ILLUMINATION LENS AND LUMINESCENT DEVICE USING THE SAME	

Publication Information:	
☐	Request Early Publication (Fee required at time of Request 37 CFR 1.219)
☐	Request Not to Publish. I hereby request that the attached application not be published under 35 U.S.C. 122(b) and certify that the invention disclosed in the attached application has not been and will not be the subject of an application filed in another country, or under a multilateral agreement, that requires publication at eighteen months after filing.

Representative Information:

Representative information should be provided for all practitioners having a power of attorney in the application. Providing this information in the Application Data Sheet does not constitute a power of attorney in the application (see 37 CFR 1.32).
Enter either Customer Number or complete the Representative Name section below. If both sections are completed the Customer Number will be used for the Representative Information during processing.

Please Select One:	◉ Customer Number	◯ US Patent Practitioner	◯ US Representative (37 CFR 11.9)
Customer Number	20575		

Domestic Priority Information:

This section allows for the applicant to claim benefit under 35 U.S.C. 119(e), 120, 121, or 365(c). Providing this information in the application data sheet constitutes the specific reference required by 35 U.S.C. 119(e) or 120, and 37 CFR 1.78(a)(2) or CFR 1.78(a)(4), and need not otherwise be made part of the specification.

Prior Application Status			Remove
Application Number	Continuity Type	Prior Application Number	Filing Date (YYYY-MM-DD)

Additional Domestic Priority Data may be generated within this form by selecting the **Add** button. Add

Foreign Priority Information:

This section allows for the applicant to claim benefit of foreign priority and to identify any prior foreign application for which priority is not claimed. Providing this information in the application data sheet constitutes the claim for priority as required by 35 U.S.C. 119(b) and 37 CFR 1.55(a).

			Remove
Application Number	Country [i]	Parent Filing Date (YYYY-MM-DD)	Priority Claimed
PCT/KR2005/003346	WO	2005-10-07	◉ Yes ◯ No
			Remove
Application Number	Country [i]	Parent Filing Date (YYYY-MM-DD)	Priority Claimed
2004-0079909	KR	2004-10-07	◉ Yes ◯ No
			Remove
Application Number	Country [i]	Parent Filing Date (YYYY-MM-DD)	Priority Claimed
2005-000000269	KR	2005-01-03	◉ Yes ◯ No

Under the Paperwork Reduction Act of 1995, no persons are required to respond to a collection of information unless it contains a valid OMB control number.

Application Data Sheet 37 CFR 1.76	Attorney Docket Number	3576-043
	Application Number	
Title of Invention	SIDE ILLUMINATION LENS AND LUMINESCENT DEVICE USING THE SAME	

Remove			
Application Number	Country [i]	Parent Filing Date (YYYY-MM-DD)	Priority Claimed
2005-0056436	KR	2005-06-28	◉ Yes ◯ No
Remove			
Application Number	Country [i]	Parent Filing Date (YYYY-MM-DD)	Priority Claimed
2005-0083743	KR	2005-09-08	◉ Yes ◯ No
Additional Foreign Priority Data may be generated within this form by selecting the **Add** button.			Add

Assignee Information:

Providing this information in the application data sheet does not substitute for compliance with any requirement of part 3 of Title 37 of the CFR to have an assignment recorded in the Office.			
Assignee 1			Remove
If the Assignee is an Organization check here. ☒			
Organization Name	Seoul Semiconductor Co., Ltd.		
Mailing Address Information:			
Address 1	148-29 Gasan-dong, Geumcheon-gu,		
Address 2			
City	Seoul 153-023	**State/Province**	
Country [i] KR		Postal Code	
Phone Number		Fax Number	
Email Address			
Additional Assignee Data may be generated within this form by selecting the **Add** button.			Add

Signature:

A signature of the applicant or representative is required in accordance with 37 CFR 1.33 and 10.18. Please see 37 CFR 1.4(d) for the form of the signature.					
Signature	/s/ Hosoon Lee			Date (YYYY-MM-DD)	2007-04-06
First Name	Hosoon	Last Name	LEE	Registration Number	56737

This collection of information is required by 37 CFR 1.76. The information is required to obtain or retain a benefit by the public which is to file (and by the USPTO to process) an application. Confidentiality is governed by 35 U.S.C. 122 and 37 CFR 1.14. This collection is estimated to take 23 minutes to complete, including gathering, preparing, and submitting the completed application data sheet form to the USPTO. Time will vary depending upon the individual case. Any comments on the amount of time you require to complete this form and/or suggestions for reducing this burden, should be sent to the Chief Information Officer, U.S. Patent and Trademark Office, U.S. Department of Commerce, P.O. Box 1450, Alexandria, VA 22313-1450. DO NOT SEND FEES OR COMPLETED FORMS TO THIS ADDRESS. **SEND TO: Commissioner for Patents, P.O. Box 1450, Alexandria, VA 22313-1450.**

Privacy Act Statement

The Privacy Act of 1974 (P.L. 93-579) requires that you be given certain information in connection with your submission of the attached form related to a patent application or patent. Accordingly, pursuant to the requirements of the Act, please be advised that: (1) the general authority for the collection of this information is 35 U.S.C. 2(b)(2); (2) furnishing of the information solicited is voluntary; and (3) the principal purpose for which the information is used by the U.S. Patent and Trademark Office is to process and/or examine your submission related to a patent application or patent. If you do not furnish the requested information, the U.S. Patent and Trademark Office may not be able to process and/or examine your submission, which may result in termination of proceedings or abandonment of the application or expiration of the patent.

The information provided by you in this form will be subject to the following routine uses:

1. The information on this form will be treated confidentially to the extent allowed under the Freedom of Information Act (5 U.S.C. 552) and the Privacy Act (5 U.S.C. 552a). Records from this system of records may be disclosed to the Department of Justice to determine whether the Freedom of Information Act requires disclosure of these records.

2. A record from this system of records may be disclosed, as a routine use, in the course of presenting evidence to a court, magistrate, or administrative tribunal, including disclosures to opposing counsel in the course of settlement negotiations.

3. A record in this system of records may be disclosed, as a routine use, to a Member of Congress submitting a request involving an individual, to whom the record pertains, when the individual has requested assistance from the Member with respect to the subject matter of the record.

4. A record in this system of records may be disclosed, as a routine use, to a contractor of the Agency having need for the information in order to perform a contract. Recipients of information shall be required to comply with the requirements of the Privacy Act of 1974, as amended, pursuant to 5 U.S.C. 552a(m).

5. A record related to an International Application filed under the Patent Cooperation Treaty in this system of records may be disclosed, as a routine use, to the International Bureau of the World Intellectual Property Organization, pursuant to the Patent Cooperation Treaty.

6. A record in this system of records may be disclosed, as a routine use, to another federal agency for purposes of National Security review (35 U.S.C. 181) and for review pursuant to the Atomic Energy Act (42 U.S.C. 218(c)).

7. A record from this system of records may be disclosed, as a routine use, to the Administrator, General Services, or his/her designee, during an inspection of records conducted by GSA as part of that agency's responsibility to recommend improvements in records management practices and programs, under authority of 44 U.S.C. 2904 and 2906. Such disclosure shall be made in accordance with the GSA regulations governing inspection of records for this purpose, and any other relevant (i.e., GSA or Commerce) directive. Such disclosure shall not be used to make determinations about individuals.

8. A record from this system of records may be disclosed, as a routine use, to the public after either publication of the application pursuant to 35 U.S.C. 122(b) or issuance of a patent pursuant to 35 U.S.C. 151. Further, a record may be disclosed, subject to the limitations of 37 CFR 1.14, as a routine use, to the public if the record was filed in an application which became abandoned or in which the proceedings were terminated and which application is referenced by either a published application, an application open to public inspections or an issued patent.

9. A record from this system of records may be disclosed, as a routine use, to a Federal, State, or local law enforcement agency, if the USPTO becomes aware of a violation or potential violation of law or regulation.

IN THE UNITED STATES PATENT AND TRADEMARK OFFICE

MISCELLANEOUS LETTER

REGARDING PAYMENT OF FEES AND EXTENSION OF TIME

CLAIMS AS FILED				
For	Number Filed	Number Extra	Rate	Filing, Search, Examination Fees $900
Total Claims	15-20	0	x $50 =	$0
Independent Claims	3-3	0	x $200 =	$0
TOTAL FILING FEE				$900

☒ Payment of fees is made via electronic filing system authorizing credit card payment for the following, (1) Basic Filing Fee ($300.00), (2) Search Fee ($400.00), (3) Examination Fee ($200.00), (4) Surcharge for Late completion fee ($130.00), (5) Additional claims fee and, (6) Application Size Fee.

☒ Applicant is paying with Visa card however requests that any deficiency or overpayment be charged or credited to deposit account number 13-1703.

Respectfully submitted,

Customer No. 20575

MARGER JOHNSON & McCOLLOM, P.C.

Date: April 6, 2007

Hosoon Lee
Reg. No. 56,737

MARGER JOHNSON & McCOLLOM, P.C.
210 SW Morrison Street, Suite 400
Portland, OR 97204
(503) 222-3613

PTO-1390 (Rev. 07-2005)
Approved for use through 3/31/2007. OMB 0651-0021
U.S. Patent and Trademark Office; U.S. DEPARTMENT OF COMMERCE
Under the Paperwork Reduction Act of 1995, no persons are required to respond to a collection of information unless it displays a valid OMB control number.

TRANSMITTAL LETTER TO THE UNITED STATES DESIGNATED/ELECTED OFFICE (DO/EO/US) CONCERNING A SUBMISSION UNDER 35 U.S.C. 371

ATTORNEY'S DOCKET NUMBER: 3576-043

U.S. APPLICATION NO. (If known, see 37 CFR 1.5):

INTERNATIONAL APPLICATION NO.	INTERNATIONAL FILING DATE	PRIORITY DATE CLAIMED
PCT/KR2005/003346	7 October 2005	7 Oct. 05, 03 Jan. 05, 28 Jun. 05 and 8 Sep. 05

TITLE OF INVENTION: SIDE ILLUMINATION LENS AND LUMINESCENT DEVICE USING THE SAME

APPLICANT(S) FOR DO/EO/US: Do-Hyung KIM, et al.

Applicant herewith submits to the United States Designated/Elected Office (DO/EO/US) the following items and other information:

1. [X] This is a **FIRST** submission of items concerning a submission under 35 U.S.C. 371.
2. [ ] This is a **SECOND** or **SUBSEQUENT** submission of items concerning a submission under 35 U.S.C. 371.
3. [X] This is an express request to begin national examination procedures (35 U.S.C. 371(f)). The submission must include items (5), (6), (9) and (21) indicated below.
4. [X] The US has been elected (Article 31).
5. [X] A copy of the International Application as filed (35 U.S.C. 371(c)(2))
   a. [X] is attached hereto (required only if not communicated by the International Bureau).
   b. [ ] has been communicated by the International Bureau.
   c. [ ] is not required, as the application was filed in the United States Receiving Office (RO/US).
6. [ ] An English language translation of the International Application as filed (35 U.S.C. 371(c)(2)).
   a. [ ] is attached hereto.
   b. [ ] has been previously submitted under 35 U.S.C. 154(d)(4).
7. [ ] Amendments to the claims of the International Application under PCT Article 19 (35 U.S.C. 371(c)(3))
   a. [ ] are attached hereto (required only if not communicated by the International Bureau).
   b. [ ] have been communicated by the International Bureau.
   c. [ ] have not been made; however, the time limit for making such amendments has NOT expired.
   d. [ ] have not been made and will not be made.
8. [ ] An English language translation of the amendments to the claims under PCT Article 19 (35 U.S.C. 371(c)(3)).
9. [X] An oath or declaration of the inventor(s) (35 U.S.C. 371(c)(4)).
10. [ ] An English language translation of the annexes of the International Preliminary Examination Report under PCT Article 36 (35 U.S.C. 371(c)(5)).

Items 11 to 20 below concern document(s) or information included:

11. [X] An Information Disclosure Statement under 37 CFR 1.97 and 1.98.
12. [ ] An assignment document for recording. A separate cover sheet in compliance with 37 CFR 3.28 and 3.31 is included.
13. [ ] A preliminary amendment.
14. [X] An Application Data Sheet under 37 CFR 1.76.
15. [ ] A substitute specification.
16. [ ] A power of attorney and/or change of address letter.
17. [ ] A computer-readable form of the sequence listing in accordance with PCT Rule 13*ter*.2 and 37 CFR 1.821- 1.825.
18. [ ] A second copy of the published International Application under 35 U.S.C. 154(d)(4).
19. [ ] A second copy of the English language translation of the international application under 35 U.S.C. 154(d)(4).

This collection of information is required by 37 CFR 1.414 and 1.491-1.492. The information is required to obtain or retain a benefit by the public, which is to file (and by the USPTO to process) an application. Confidentiality is governed by 35 U.S.C. 122 and 37 CFR 1.11 and 1.14. This collection is estimated to take 15 minutes to complete, including gathering information, preparing, and submitting the completed form to the USPTO. Time will vary depending upon the individual case. Any comments on the amount of time you require to complete this form and/or suggestions for reducing this burden, should be sent to the Chief Information Officer, U.S. Patent and Trademark Office, U.S. Department of Commerce, P.O. Box 1450, Alexandria, VA 22313-1450. DO NOT SEND FEES OR COMPLETED FORMS TO THIS ADDRESS. **SEND TO: Mail Stop PCT, Commissioner for Patents, P.O. Box 1450, Alexandria, VA 22313-1450.**

Under the Paperwork Reduction Act of 1995, no persons are required to respond to a collection of information unless it displays a valid OMB control number.

U.S. APPLICATION NO. (if known, see 37 CFR 1.5)	INTERNATIONAL APPLICATION NO.	ATTORNEY'S DOCKET NUMBER
	PCT/KR2005/003346	3576-043

20. Other items or information:

The following fees have been submitted	CALCULATIONS	PTO USE ONLY
21. [X] Basic national fee (37 CFR 1.492(a)) **$300**	$300	
22. [X] Examination fee (37 CFR 1.492(c)) If the written opinion prepared by ISA/US or the international preliminary examination report prepared by IPEA/US indicates all claims satisfy provisions of PCT Article 33(1)-(4) ..... **$0** All other situations **$200**	$200	
23. [X] Search fee (37 CFR 1.492(b)) If the written opinion of the ISA/US or the International preliminary examination report prepared by IPEA/US indicates all claims satisfy provisions of PCT Article 33(1)-(4) ..... **$0** Search fee (37 CFR 1.445(a)(2)) has been paid on the international application to the USPTO as an International Searching Authority ..... **$100** International Search Report prepared by an ISA other than the US and provided to the Office or previously communicated to the US by the IB ..... **$400** All other situations **$500**	$400	
TOTAL OF 21, 22 and 23 =	$900	
[ ] Additional fee for specification and drawings filed in paper over 100 sheets (excluding sequence listing in compliance with 37 CFR 1.821(c) or (e) or computer program listing in an electronic medium) (37 CFR 1.492(j)). The fee is **$250** for each additional 50 sheets of paper or fraction thereof.		

Total Sheets	Extra Sheets	Number of each additional 50 or fraction thereof (round **up** to a whole number)	RATE	
- 100 =	/50 =		x **$250**	$

Surcharge of **$130.00** for furnishing any of the search fee, examination fee, or the oath or declaration after the date of commencement of the national stage (37 CFR 1.492(h)).	$	

CLAIMS	NUMBER FILED	NUMBER EXTRA	RATE	$	
Total claims	15 - 20 =	0	x $ 50	$	
Independent claims	3 - 3 =	0	x **$200**	$	
MULTIPLE DEPENDENT CLAIM(S) (if applicable)			+ **$360**	$	
			TOTAL OF ABOVE CALCULATIONS =	$ 900	
[ ] Applicant claims small entity status. See 37 CFR 1.27. Fees above are reduced by ½.					
			SUBTOTAL =	$	
Processing fee of **$130.00** for furnishing the English translation later than 30 months from the earliest claimed priority date (37 CFR 1.492(i)). +				$	
			TOTAL NATIONAL FEE =	$ 900	
Fee for recording the enclosed assignment (37 CFR 1.21(h)). The assignment must be accompanied by an appropriate cover sheet (37 CFR 3.28, 3.31). **$40.00** per property +				$	
			TOTAL FEES ENCLOSED =	$ 900	
				Amount to be refunded:	$
				Amount to be charged	$

Under the Paperwork Reduction Act of 1995, no persons are required to respond to a collection of information unless it displays a valid OMB control number.

a. ☐ A check in the amount of $ _____ to cover the above fees is enclosed.

b. ☐ Please charge my Deposit Account No. _____ in the amount of $ _____ to cover the above fees. A duplicate copy of this sheet is enclosed.

c. ☒ The Commissioner is hereby authorized to charge any additional fees which may be required, or credit any overpayment to Deposit Account No. 17-1703. ~~A duplicate copy of this sheet is enclosed.~~

d. ☒ Fees are to be charged to a credit card. **WARNING:** Information on this form may become public. **Credit card information should not be included on this form.** Provide credit card information and authorization on PTO-2038.

NOTE: Where an appropriate time limit under 37 CFR 1.495 has not been met, a petition to revive (37 CFR 1.137(a) or (b)) must be filed and granted to restore the International Application to pending status.

SEND ALL CORRESPONDENCE TO:

SIGNATURE

Hosoon Lee

NAME

56,737

REGISTRATION NUMBER

PTO-1390 (Rev. 07-2005)
Approved for use through 3/31/2007. OMB 0651-0021
U.S. Patent and Trademark Office; U.S. DEPARTMENT OF COMMERCE
Under the Paperwork Reduction Act of 1995, no persons are required to respond to a collection of information unless it displays a valid OMB control number.

TRANSMITTAL LETTER TO THE UNITED STATES DESIGNATED/ELECTED OFFICE (DO/EO/US) CONCERNING A SUBMISSION UNDER 35 U.S.C. 371

ATTORNEY'S DOCKET NUMBER: 3576-043

U.S. APPLICATION NO. (If known, see 37 CFR 1.5):

INTERNATIONAL APPLICATION NO.	INTERNATIONAL FILING DATE	PRIORITY DATE CLAIMED
PCT/KR2005/003346	7 October 2005	7 Oct. 05, 03 Jan. 05, 28 Jun. 05 and 8 Sep. 05

TITLE OF INVENTION: SIDE ILLUMINATION LENS AND LUMINESCENT DEVICE USING THE SAME

APPLICANT(S) FOR DO/EO/US: Do-Hyung KIM, et al.

Applicant herewith submits to the United States Designated/Elected Office (DO/EO/US) the following items and other information:

1. [X] This is a **FIRST** submission of items concerning a submission under 35 U.S.C. 371.
2. [ ] This is a **SECOND** or **SUBSEQUENT** submission of items concerning a submission under 35 U.S.C. 371.
3. [X] This is an express request to begin national examination procedures (35 U.S.C. 371(f)). The submission must include items (5), (6), (9) and (21) indicated below.
4. [X] The US has been elected (Article 31).
5. [X] A copy of the International Application as filed (35 U.S.C. 371(c)(2))
   a. [X] is attached hereto (required only if not communicated by the International Bureau).
   b. [ ] has been communicated by the International Bureau.
   c. [ ] is not required, as the application was filed in the United States Receiving Office (RO/US).
6. [ ] An English language translation of the International Application as filed (35 U.S.C. 371(c)(2)).
   a. [ ] is attached hereto.
   b. [ ] has been previously submitted under 35 U.S.C. 154(d)(4).
7. [ ] Amendments to the claims of the International Application under PCT Article 19 (35 U.S.C. 371(c)(3))
   a. [ ] are attached hereto (required only if not communicated by the International Bureau).
   b. [ ] have been communicated by the International Bureau.
   c. [ ] have not been made; however, the time limit for making such amendments has NOT expired.
   d. [ ] have not been made and will not be made.
8. [ ] An English language translation of the amendments to the claims under PCT Article 19 (35 U.S.C. 371(c)(3)).
9. [X] An oath or declaration of the inventor(s) (35 U.S.C. 371(c)(4)).
10. [ ] An English language translation of the annexes of the International Preliminary Examination Report under PCT Article 36 (35 U.S.C. 371(c)(5)).

Items 11 to 20 below concern document(s) or information included:

11. [X] An Information Disclosure Statement under 37 CFR 1.97 and 1.98.
12. [ ] An assignment document for recording. A separate cover sheet in compliance with 37 CFR 3.28 and 3.31 is included.
13. [ ] A preliminary amendment.
14. [X] An Application Data Sheet under 37 CFR 1.76.
15. [ ] A substitute specification.
16. [ ] A power of attorney and/or change of address letter.
17. [ ] A computer-readable form of the sequence listing in accordance with PCT Rule 13*ter*.2 and 37 CFR 1.821- 1.825.
18. [ ] A second copy of the published International Application under 35 U.S.C. 154(d)(4).
19. [ ] A second copy of the English language translation of the international application under 35 U.S.C. 154(d)(4).

This collection of information is required by 37 CFR 1.414 and 1.491-1.492. The information is required to obtain or retain a benefit by the public, which is to file (and by the USPTO to process) an application. Confidentiality is governed by 35 U.S.C. 122 and 37 CFR 1.11 and 1.14. This collection is estimated to take 15 minutes to complete, including gathering information, preparing, and submitting the completed form to the USPTO. Time will vary depending upon the individual case. Any comments on the amount of time you require to complete this form and/or suggestions for reducing this burden, should be sent to the Chief Information Officer, U.S. Patent and Trademark Office, U.S. Department of Commerce, P.O. Box 1450, Alexandria, VA 22313-1450. DO NOT SEND FEES OR COMPLETED FORMS TO THIS ADDRESS. **SEND TO: Mail Stop PCT, Commissioner for Patents, P.O. Box 1450, Alexandria, VA 22313-1450.**

Under the Paperwork Reduction Act of 1995, no persons are required to respond to a collection of information unless it displays a valid OMB control number.

U.S. APPLICATION NO. (if known, see 37 CFR 1.5)	INTERNATIONAL APPLICATION NO.	ATTORNEY'S DOCKET NUMBER
	PCT/KR2005/003346	3576-043

20. Other items or information:

The following fees have been submitted	CALCULATIONS	PTO USE ONLY
21. [X] Basic national fee (37 CFR 1.492(a)) **$300**	$300	
22. [X] Examination fee (37 CFR 1.492(c)) If the written opinion prepared by ISA/US or the international preliminary examination report prepared by IPEA/US indicates all claims satisfy provisions of PCT Article 33(1)-(4) ..... **$0** All other situations **$200**	$200	
23. [X] Search fee (37 CFR 1.492(b)) If the written opinion of the ISA/US or the International preliminary examination report prepared by IPEA/US indicates all claims satisfy provisions of PCT Article 33(1)-(4) ..... **$0** Search fee (37 CFR 1.445(a)(2)) has been paid on the international application to the USPTO as an International Searching Authority ..... **$100** International Search Report prepared by an ISA other than the US and provided to the Office or previously communicated to the US by the IB ..... **$400** All other situations **$500**	$400	
TOTAL OF 21, 22 and 23 =	$900	
[ ] Additional fee for specification and drawings filed in paper over 100 sheets (excluding sequence listing in compliance with 37 CFR 1.821(c) or (e) or computer program listing in an electronic medium) (37 CFR 1.492(j)). The fee is **$250** for each additional 50 sheets of paper or fraction thereof.		

Total Sheets	Extra Sheets	Number of each additional 50 or fraction thereof (round **up** to a whole number)	RATE	
- 100 =	/50 =		x **$250**	$

Surcharge of **$130.00** for furnishing any of the search fee, examination fee, or the oath or declaration after the date of commencement of the national stage (37 CFR 1.492(h)).	$	

CLAIMS	NUMBER FILED	NUMBER EXTRA	RATE	$	
Total claims	15 - 20 =	0	x $ 50	$	
Independent claims	3 - 3 =	0	x **$200**	$	
MULTIPLE DEPENDENT CLAIM(S) (if applicable)			+ **$360**	$	
			TOTAL OF ABOVE CALCULATIONS =	$ 900	
[ ] Applicant claims small entity status. See 37 CFR 1.27. Fees above are reduced by ½.					
			SUBTOTAL =	$	
Processing fee of **$130.00** for furnishing the English translation later than 30 months from the earliest claimed priority date (37 CFR 1.492(i)). +				$	
			TOTAL NATIONAL FEE =	$ 900	
Fee for recording the enclosed assignment (37 CFR 1.21(h)). The assignment must be accompanied by an appropriate cover sheet (37 CFR 3.28, 3.31). **$40.00** per property +				$	
			TOTAL FEES ENCLOSED =	$ 900	
				Amount to be refunded:	$
				Amount to be charged	$

Under the Paperwork Reduction Act of 1995, no persons are required to respond to a collection of information unless it displays a valid OMB control number.

a. ☐ A check in the amount of $ _____ to cover the above fees is enclosed.

b. ☐ Please charge my Deposit Account No. _____ in the amount of $ _____ to cover the above fees. A duplicate copy of this sheet is enclosed.

c. ☒ The Commissioner is hereby authorized to charge any additional fees which may be required, or credit any overpayment to Deposit Account No. 17-1703. ~~A duplicate copy of this sheet is enclosed.~~

d. ☒ Fees are to be charged to a credit card. **WARNING:** Information on this form may become public. **Credit card information should not be included on this form.** Provide credit card information and authorization on PTO-2038.

NOTE: Where an appropriate time limit under 37 CFR 1.495 has not been met, a petition to revive (37 CFR 1.137(a) or (b)) must be filed and granted to restore the International Application to pending status.

SEND ALL CORRESPONDENCE TO:

SIGNATURE

Hosoon Lee

NAME

56,737

REGISTRATION NUMBER

SIDE-LUMINESCENCE LENS AND LUMINESCENT DEVICE USING THE SAME

CROSS-REFERENCE TO RELATED APPLICATION

This application is a U.S. national phase application of PCT International Application No. PCT/KR2005/003346, filed October 7, 2005, which claims priority of Korean Patent Application Nos. 2004-0079909, filed October 7, 2004, 2005-0000269, filed January 3, 2005, 2005-0056436, filed June 28, 2005 and 2005-0083743, filed September 8, 2005, the contents of which are incorporated herein by reference in their entirety.

Technical Field

The present invention relates to a side-luminescence lens and a luminescent device using the same, and more particularly, to a side-luminescence lens utilizing total internal reflection and a luminescent device using the lens.

Background Art

In general, a light emitting diode (LED) is a device utilizing a phenomenon in which minority carriers (electrons or holes) injected by means of a p-n junction structure of a semiconductor are produced, and light is emitted due to recombination of the carriers. Conventionally, colors of light emitted by a light emitting diode are only red and green, and thus, the conventional light emitting diode has its use limited to a display device.

With the development of technology, however, light emission is allowed in various ranges of wavelength, in addition to blue light emission. Thus, a light emitting diode has begun to be used in a variety of fields. In particular, as white light emission is realized, the use of the light emitting diode is expanded to an illumination device as well as a backlight for a liquid crystal display.

However, since the direction of light emitted by a light emitting diode is random, the light should be induced in a desired direction to be used as an illumination device and a backlight. To induce light in the prior art, as shown in Fig. 1a, a luminescent chip 11 is mounted on a substrate 10, molding is performed to form a convex lens 12 over the luminescent chip 11, and a pattern 13 for diffused reflection is formed on the surface of the convex lens 12 so that light can be spread widely. As shown in Fig. 1b, reflection cups 14 are formed at both sides of

the luminescent chip 11 to enhance focusing of light. Since the aforementioned luminescent device mainly emits light forward rather than sideward, there is a problem in that it is difficult to apply the luminescent device to a backlight which should widely emit light sideward.

Accordingly, studies on development of a device capable of emitting light in side directions of a lens have been actively conducted using the total internal reflection (TIR) property of light. Conventional lenses using TIR are disclosed in U.S. Patent Nos. 6,679,621, 6,607,286 and 6,598,998. In the patents, a lens comprises a total reflection surface which is formed on the lens and has a predetermined slope, and a plurality of refractive surfaces which have different slopes and through which light reflected by the total reflection surface is emitted to the outside. Since the conventional lens has the plurality of refractive surfaces formed on right and left sides of the total reflection surface, there is a problem in that a process of fabricating the lens is complicated and fabricating costs increase. That is, there are the following problems: if a lens is fabricated using a mold, upper and lower mold parts and right and left mold parts are required; and if a lens is fabricated by means of a casting or grinding method, it cannot be easily fabricated in view of its shape.

Disclosure of Invention

Technical Problem

Accordingly, the present invention is conceived to solve the aforementioned problems. An object of the present invention is to provide a side-luminescence lens, which comprises a total internal reflection surface with a total reflection slope and a linear and/or curved refractive surface(s) extending therefrom, thereby achieving side luminescence, facilitating a fabricating process thereof and reducing fabricating costs, and a luminescent device using the side-luminescence lens.

Technical Solution

The present invention provides a lens comprising a body, a total reflection surface with a total reflection slope with respect to a central axis of the body, and a linear and/or curved refractive surface(s) formed to extend from a periphery of the total reflection surface.

Here, the refractive surface may comprise a linear refractive surface formed by being bent at the periphery of the total reflection surface, and a curved refractive surface formed to

extend from a periphery of the linear refractive surface. Alternatively, the refractive surface may comprise a curved refractive surface formed to extend from the periphery of the total reflection surface, and a linear refractive surface formed by being bent at a periphery of the curved refractive surface.

Preferably, the curved refractive surface takes the shape of an ellipse, and a ratio of minor and major axes of the ellipse is 1:4 or less. The linear refractive surface may be bent more than once.

The total reflection surface may comprise a first total reflection surface having a section in the form of a V-shaped recess with a predetermined slope, and a second total reflection surface extending upward from a periphery of the first total reflection surface and formed to be sloped with a gradient smaller than that of the first total reflection surface.

The refractive index of the body may be 1.2 to 2.0.

The present invention provides a luminescent device comprising a package housing with an opening and a through-hole exposed by the opening; a lead terminal having an inner portion exposed within the opening of the package housing and an outer portion extending from the inner portion and protruding to the outside of the package housing; a heat sink coupled to a lower portion of the package housing and having a portion exposed through the opening; and a lens including a total reflection surface encapsulating the package housing and having a total reflection slope, and a refractive surface formed to extend from a periphery of the total reflection surface.

Here, the package housing may comprise first and second housings mutually coupled to each other with the lead terminal interposed therebetween, and the opening may be formed in the first housing.

The heat sink may comprise a heat sink body corresponding to a bottom surface of the package housing, and an insertion projection protruding upward from a central portion of the heat sink body and inserted into the through-hole of the package housing. At this time, the heat sink may have a coupling projection on at least one side of the heat sink body and the insertion projection.

The present invention provides a luminescent device comprising a heat sink support ring; a heat sink inserted into the support ring; at least two lead terminals arranged at both sides of the support ring while being spaced apart from the support ring and the heat sink; a package body

that molds and supports the heat sink and the lead terminals, and has an opening through which an upper portion of the heat sink and portions of the lead terminals are exposed; and a lens including a total reflection surface encapsulating the package body and having a total reflection slope, and a refractive surface formed to extend from a periphery edge of the total reflection surface.

Here, the heat sink may have a base and a projection protruding upward from the base at the center thereof, and the projection is inserted into the support ring.

The heat sink may further comprise a support ring-receiving groove in a side surface of the projection so that the support ring-receiving groove can be fastened to the support ring. The package body may be a plastic resin body formed by insert-molding a thermosetting or thermoplastic resin after the heat sink is inserted into the support ring.

Advantageous Effects

As described above, according to the present invention, a lens with total internal reflection surfaces with different slopes, and a linear and/or curved refractive surface(s) allows light emitted forward from a luminescent chip to be guided to a side of the lens.

Further, a linear surface(s) formed in a direction perpendicular or parallel to a central axis of a lens and a curved surface are formed on an edge of the lens so that a process of fabricating the lens is facilitated, thereby reducing a defective rate and fabrication costs of the lens.

Moreover, it is possible to provide a luminescent device employing a heat sink to exhibit superior heat dissipation property, thereby obtaining high output of light.

Furthermore, after a heat sink is fixed to a frame, a package body can be formed using an insert molding technique, so that a luminescent device with a structure in which lead terminals and the heat sink are mutually coupled to each other can be easily fabricated.

In addition, it is possible to provide a frame that allows a heat sink to be fixed before a package body is formed, so that fabrication of a luminescent device is facilitated.

Further, there is an advantage in that a large quantity of luminescent devices can be mass-produced at a high rate because a method of fabricating the luminescent devices is similar to that of conventional top luminescent devices.

Brief Description of the Drawings

Figs. 1a and 1b are sectional views of conventional luminescent devices.

Fig. 2 is a conceptual view illustrating a critical angle.

Fig. 3a is a sectional conceptual view of a luminescent device with a lens according to a first embodiment of the present invention.

Fig. 3b is a plan view of the lens according to the first embodiment.

Fig. 4 is a conceptual view illustrating the operation of the total internal reflection lens according to the first embodiment.

Fig. 5 is a graph showing simulation results of the luminescent device with the lens according to the first embodiment.

Figs. 6a and 6b are graphs showing experimental measurement results.

Fig. 7 shows plan and side views of an external frame for use in mass-producing a luminescent device according to a first modification of the embodiment.

Fig. 8 is an exploded perspective view illustrating a luminescent device with a heat sink according to the first modification.

Fig. 9 shows enlarged plan and side views illustrating a state where the luminescent device with the heat sink according to the first modification is formed in an external frame.

Figs. 10 (a) and (b) are top and bottom perspective views of the luminescent device according to the first modification.

Figs. 11 (a) and (b) and Figs. 12 (a) to (c) are sectional views of the luminescent device according to the first modification.

Fig. 13 is a perspective view illustrating a lead frame for use in mass-producing a luminescent device according to a second modification of the embodiment.

Fig. 14 is a flowchart illustrating a method of fabricating the luminescent device according to the second modification.

Figs. 15 to 21 are perspective views illustrating the method of fabricating the luminescent device in accordance with the flowchart.

Fig. 22a is a conceptual sectional view of a luminescent device with a lens according to a second embodiment of the present invention.

Fig. 22b is a perspective view of the lens according to the second embodiment.

Fig. 23 is a conceptual view illustrating the operation of the total internal reflection lens according to the second embodiment.

Fig. 24 is a graph showing simulation results of the luminescent device according to the second embodiment.

Fig. 25a is a conceptual sectional view of a luminescent device with a lens according to a third embodiment of the present invention.

Fig. 25b is a perspective view of the lens according to the third embodiment.

Fig. 26 is a conceptual view illustrating the operation of the total internal reflection lens according to the third embodiment.

Fig. 27 is a graph showing simulation results of the luminescent device according to the third embodiment.

Fig. 28a is a conceptual sectional view of a luminescent device with a lens according to a fourth embodiment of the present invention.

Fig. 28b is a perspective view of the lens according to the fourth embodiment.

Fig. 29 is a conceptual view illustrating the operation of the total internal reflection lens according to the fourth embodiment.

Fig. 30 is a graph showing simulation results of the luminescent device according to the fourth embodiment.

Fig. 31a is a conceptual sectional view of a luminescent device with a lens according to a fifth embodiment of the present invention.

Fig. 31b is a perspective view of the lens according to the fifth embodiment.

Fig. 32 is a conceptual view illustrating the operation of the total internal reflection lens according to the fifth embodiment.

Fig. 33 is a graph showing simulation results of the luminescent device according to the fifth embodiment.

Best Mode for Carrying Out the Invention

Hereinafter, preferred embodiments of the present invention will be described in detail with reference to the accompanying drawings. However, the present invention is not limited to the embodiments but may be implemented into different forms. These embodiments are provided only for illustrative purposes and for full understanding of the scope of the present invention by those skilled in the art. Throughout the drawings, like elements are designated by like reference numerals.

Fig. 2 is a conceptual view illustrating a critical angle.

Referring to Fig. 2, the critical angle refers to the the smallest incidence angle of at which total internal reflection occurs at a refractive boundary when light travels from a material with a high refractive index n1 to another material with a low refractive index n2. That is, if light meets and is refracted on the other material (n2<n1) as shown in Fig. 2 (b), the incidence angle that results in a refraction angle of 90 degrees is referred to as the critical angle. At this time, the incidence angle refers to an angle measured with respect to the normal at the refractive boundary. If an incidence angle is greater than the critical angle, total internal reflection occurs.

In a case where light is vertically incident from one medium n1 on another medium n2 in the two different media (n2<n1) as shown in Fig. 2 (b), if a boundary surface of the medium n1 has a certain slope, an angle defined between the incident light and the normal perpendicular to the boundary surface becomes greater than the critical angle ($\theta_{C2} \rangle \theta_{C1}$). As a result, the light is not transmitted through the other medium n2 after passing through the medium n1 but is reflected toward the inside of the medium n1. With the use of the total internal reflection phenomenon of light, the light is not transmitted but reflected even on a transparent surface. Here, one of the media may be a material with superior transmittancy, and the other medium may be air.

<Embodiment 1>

Fig. 3a is a sectional conceptual view of a luminescent device with a lens according to a first embodiment of the present invention, Fig. 3b is a plan view of the lens according to the first embodiment, Fig. 4 is a conceptual view illustrating the operation of the total internal reflection lens according to the first embodiment, Fig. 5 is a graph showing simulation results of the luminescent device with the lens according to the first embodiment, and Figs. 6a and 6b are graphs showing experimental measurement results.

Referring to Figs. 3a, 3b and 4, the luminescent device with the lens according to this embodiment comprises a substrate 100; a luminescent chip 110 mounted on the substrate 100; and a lens that encapsulates the luminescent chip 110 and has a V-shaped first total reflection surface 121 with a predetermined slope with respect to a central axis, a second total reflection surface 122 extending outward therefrom with a slope smaller than that of the first total reflection surface 121, and a curved refractive surface 123 extending downward from a periphery

of the second total reflection surface 122. Here, it is preferred that the curved refractive surface be in the form of a part of an ellipse.

First, the aforementioned lens of this embodiment will be described below.

The first total reflection surface 121 is made in the form of a V-shaped recess over the luminescent chip 110, the curved refractive surface 123 is formed to be rounded downward from the periphery of the second total reflection surface 122, and the second total reflection surface 122 is formed to be inclined upward between the recess and a periphery of the refractive surface 123. Assuming that the height T of the entire lens 120 is 1 as shown in Fig. 3a, the height T2 of the first reflection surface 121 is 1/4 to 1/2, and the height T1 of the second reflection surface 122 is 1/4 to 1/2. As shown in the figure, the height of the refractive surface is the same as the entire lens. Assuming that the diameter C of the entire lens 120 is 1 as shown in Fig. 3b, the maximum diameter A of the first reflection surface 121 is 1/8 to 1/3, and the maximum diameter B of the second reflection surface 122 is 1/6 to 1/2.

Further, it preferred that the curved refractive surface 123 be made in the form of an ellipse and a ratio of minor and major axes of the ellipse be in a range of 1:2 to 1:4. More preferably, the ratio of the minor and major axes is 1:3.

At this time, as described above, each of the slopes of the reflection surfaces 121 and 122 should be set such that an angle defined by the total reflection surface and light emitted from the luminescent chip 110 and incident on the total reflection surface becomes greater than a critical angle. That is, since the critical angle varies depending on a refractive index of the lens 120, the lens 120 of this embodiment is made of a material with a refractive index of 1.2 to 2.0 so hat the critical angle becomes 30 to 60 degrees.

As such, in order that the angle defined by the total reflection surface and light incident on the total reflection surface 121 or 122 becomes greater than the critical angle, this embodiment is implemented such that the slope of the first reflection surface 121 is 30 to 89 degrees, and the slope of the second reflection surface 122 is 20 to 60 degrees. At this time, the slopes refer to angles defined by the first and second reflection surfaces 121 and 122 and the lower substrate 100. Preferably, the slope of the first reflection surface 121 is 40 to 70 degrees and the slope of the second reflection surface 122 is 30 to 50 degrees.

Accordingly, as shown in Fig. 4, light that is incident from a light source (luminescent chip) in a range of ±40 to ±45 with respect to an x-axis direction (vertical direction) is totally

reflected on the first and second total reflection surfaces 121 and 122 toward sides of the lens 120 (in a horizontal direction), and then emitted in a y-axis direction through the single elliptical refractive surface 123. Meanwhile, light that is incident out of the range of ±40 to ±45 degrees with respect to the x-axis direction is immediately refracted through the curved refractive surface 123 and then emitted in the y-axis direction. In this embodiment, based on about 42 degrees, light is totally reflected on the total reflection surfaces 121 and 122 and then emitted through the refractive surface at the side of the lens, or the light is emitted through the refractive surface without passing through the total reflection surfaces 121 and 122.

As such, the lens 120 of the present invention is constructed to have the total reflection surfaces with different slopes with respect to a central axis and the curved refractive surface 123 at the periphery of the lens, so that a peak value of luminous intensity is located in a range of ±10 with respect to ±80 as shown in Figs. 5,6a and 6b. Further, the luminous intensity at zero degree is minimized to be 0 to 20% of the peak value. Preferably, it is minimized to be 5 to 10% of the peak value.

In Fig. 5, a simulation was made on condition that a lens 120 with a refractive index of 1.5 was used, an angle defined by the first total reflection surface 121 and light emitted from the luminescent chip 110 was about 50 degrees, which was greater than the critical angle, and an angle defined by the second total reflection surface 122 and light emitted from the luminescent chip 110 was about 43 degrees. Then, luminous intensity was measured in a range of +90 to -90 degrees with respect to a region where the luminescent chip was located. The simulation results are shown in the graph. As shown in the graph of Fig. 5, the luminous intensity is the highest in the vicinity of ±80 degrees. That is, the luminous intensity is about 0.93 at -80 degrees and about 0.96 at +78 degrees. The luminous intensity is not greater than 0.1 in a range of ±40 degrees.

In Fig. 6a, an experiment was performed on condition that a lens 120 with a refractive index of 1.5, an angle defined by the first total reflection surface 121 and light emitted from the luminescent chip 110 was about 50 degrees, which was greater than the critical angle, and an angle defined by the second total reflection surface 122 and light emitted from the luminescent chip 110 was about 43 degrees. Then, luminous intensity was measured in a range of +90 to -90 with respect to a region where the luminescent chip was located. The experimental results are shown in the graph. In Fig. 6b, the results are shown in polar coordinates. As shown in the

graphs of Figs. 6a and 6b, the luminous intensity is the highest in the vicinity of ±75 degrees with respect to the luminescent chip, i.e., a luminescent device. That is, the luminous intensity is about 1 at -74 degrees and about 0.99 at +78 degrees. The luminous intensity is not greater than 0.1 in a range of ±20 degrees and not greater than 0.2 in a range of ±40 degrees.

This is because light totally reflected on the first and second reflection surfaces 121 and 122, and light refracted through the refractive surface 123 travels in the side direction of the luminescent device.

The aforementioned lens 120 of the present invention may be fabricated through an injection molding process or through a grinding process of grinding a top surface of the lens 120 with an elliptical contour. In the case where the lens of the present invention is fabricated by means of such fabricating methods, since the lens has a refractive surface in the form of a single elliptical refractive surface, the lens can be easily fabricated, thereby reducing a defective rate and fabricating costs. In addition, as compared with the aforementioned prior art in which a plurality of refractive surfaces of a lens have their slopes over certain distances, resulting in a large size, the present invention enables improvement of side-luminescence effects and fabrication of a lens with a compact size since the lens has a single refractive surface in the form of an ellipse.

Further, the conventional lens has the refractive surfaces in the form of sawteeth indented toward a central axis, but the lens of the present invention has the refractive surface formed to extend outward from the periphery of the total reflection surface.

All types of luminescent chips for emitting light through PN junction can be used as the luminescent chip 110, and a plurality of luminescent chips 110 may be mounted on the substrate.

A first modification of a luminescent device including the lens according to the aforementioned first embodiment will be described below with reference to the accompanying drawings.

Fig. 7 shows plan and side views of an external frame for use in mass-producing a luminescent device according to the first modification of the embodiment, Fig. 8 is an exploded perspective view illustrating a luminescent device with a heat sink according to the first modification, and Fig. 9 shows enlarged plan and side views illustrating a state where the luminescent device with the heat sink according to the first modification is formed in an external frame.

As shown in Fig. 7, the external frame 201 for use in fabricating luminescent devices according to this modification is formed with a plurality of unit bodies each of which comprises lead terminals 200 and connection terminals 210 at a predetermined interval. The lead terminals 200 are formed in pairs integrally with the connection terminals 210, and the connection terminals 210 are formed as a symmetric structure to define a hollow portion 240 with a predetermined shape on a central axis. For the sake of easy description of the structure of the lead terminal, the lead terminal 200 and the connection terminal 210 are described as separate members. However, the term "lead terminal" may be used to express a meaning including both the lead terminal 200 and the connection terminal 210.

Further, as described above, the connection terminals 210 defining the hollow portion 240 are supported by panel supports 220 to be fixed to the external frame 201, and the panel supports perform the function of fixing the positions of the connection terminals 210 when first and second package housings 300 and 310 to be described later are fixed.

In the meantime, although the hollow portion 240 formed at the center of the symmetric connection terminals 210 has a hexagonal shape in this modification, it may take the shape of a circle or a polygon with more than four sides.

After the external frame 201 for use in fabricating the luminescent device according this modification is formed as such, the first and second package housings 300 and 310, and a heat sink 330 are sequentially secured thereto to form a structure shown in Fig. 8.

That is, the first package housing 300 with a predetermined shape (rectangular shape) is located on the top of the pair of connection terminals 210 formed integrally with the lead terminals 200 in the external frame 201, and the second package housing 310 is located on the bottom of the connection terminals 210. Further, the lens 120 with the total reflection surfaces 121 and 122 and the refractive surface 123 according to the embodiment is fixed on the first package housing 300.

The first package housing 300 is recessed at a central portion thereof to contain an encapsulant and has a through-hole 380 for exposing the hollow portion 240 and terminal portions of the connection terminals 210 at the bottom thereof. Although the through-hole 380 has the same area as the recessed portion, it may have an area smaller than that of the recessed portion as shown in the figure. The recessed portion and the through-hole 380 form an opening portion of the package housing. A stepped portion 390 is formed in an inner surface of the

recessed portion to contain the encapsulant, which will be described later, for a luminescent device.

An upper surface of the second package housing 310 is formed with receiving grooves 320 that have the same shape as the connection terminals 210 to receive the connection terminals 210 therein, and a lower surface of the second package housing 310 is formed with a heat sink-seating grooves 370 into which the heat sink 330 to be described later can be inserted.

Further, a circular through-hole 350 is formed at the center of the second package housing 310 to receive an insertion projection 340 of the heat sink 330 therein, and an inner space of the insertion projection 340 becomes a luminescent chip-seating portion 360 in which a luminescent chip 400 to be described later will be fixedly seated.

Meanwhile, the first and second package housings 300 and 310 in the present invention can be made of materials such as thermal conductive plastics or high thermal conductive ceramics. The thermal conductive plastics include acrylonitrile butadiene styrene (ABS), liquid crystalline polymer (LCP), polyamide (PA), polyphenylene sulfide (PPS), thermoplastic elastomer (TPE) and the like. The high thermal conductive ceramics include alumina (Al_2O_3), silicon carbide (SiC), aluminum nitride (AlN) and the like. Among the ceramics, aluminum nitride (AlN) has properties equivalent to those of alumina and is superior to alumina in view of thermal conductivity. Thus, aluminum nitride has been widely used in practice.

In a case where the material of the first and second package housings 300 and 310 is thermal conductive plastics, the first package housing 300 and the second package housing 310 are respectively located on the top and bottom of the connection terminals 210 symmetrically formed in the external frame 201, and then fixedly attached thereto through compression at high temperature. Here, it is important to consider the shape of the through-hole 380 and the stepped portion 390, which are formed within the first package housing 300. That is, the through-hole 380 and the stepped portion 390 are formed by locating the first and second package housings 300 and 310 on the top and bottom of the external frame 201 and by pressing them using a pressing means with a projection, which takes the shape corresponding to the shape of the though-hole 380 and the stepped portion 390, at high temperature.

Meanwhile, in a case where the material of the first and second package housings 300 and 310 is ceramics, the first package housing 300 and the second package housing 310 are fabricated in advance to have an accurate size and shape. That is, since the ceramics cannot be

formed into a desired shape in a final application step due to its property by which the ceramics is formed into a desired shape at a high temperature of greater than 1000°C, the first and second package housings 300 and 310 are fabricated in advance to have a precise size and shape. At this time, the through-hole 380 and the stepped portion 390 should be formed in the first package housing 300 to be fabricated.

Therefore, the ceramic first and second package housings 300 and 310 fabricated in advance as described above are respectively located on the top and bottom of the connection terminals 210 of the external frame 201, and then fixedly attached thereto using an adhesive with high adhesive strength.

A luminescent device to be assembled into the external frame 201 fabricated as above is formed on each of the unit bodies each of which comprises the lead terminals 200 formed in the external frame 201 and the connection terminals 210 formed in the symmetrical manner integrally with the lead frames, as shown in Fig. 9.

Further, at least one luminescent chip 400 is fixedly attached to the luminescent chip-seating portion 360 at the center of the heat sink 330 constituting the luminescent device formed as described above, and the luminescent chip is electrically connected to the connection terminals 210 through connection wires 420.

Further, a zener diode 410 can be mounted in the luminescent chip-seating portion 360 and then connected, with polarity matching, to the mounted luminescent chip 400 through the connection wire 420 so as to electrically protect the luminescent chip 400. The zener diode 410 is a semiconductor device using a phenomenon in which when a relatively high reverse voltage is applied to a p-n or n-p junction of a semiconductor, a high current is started to rapidly flow with a certain voltage, and the voltage is sustained to be constant. If the zener diode 410 is applied to the luminescent device, a constant voltage can be sustained even though static electricity or a sudden current is supplied, thereby enhancing reliability of a product.

Figs. 10 (a) and (b) are top and bottom perspective views of the luminescent device according to this modification, and Figs. 11 (a) and (b) and Figs. 12 (a) to (c) are sectional views of the luminescent device according to this modification.

A plurality of luminescent devices according to this modification are formed in the external frame 201 through the aforementioned fabricating process, and each of the formed

luminescent devices is cut and withdrawn from the external frame 201 around the first and second package housings 300 and 310.

In the withdrawn luminescent device of the present invention, as shown in Fig. 10, the lead terminals 200 are bent by a predetermined length and at a predetermined angle to match with connection terminals on a PCB substrate.

As shown in Figs. 10 (b) and 11, the heat sink 330 of the luminescent device according to the present invention is fixed to the bottom of the second package housing 310 while being inserted upward thereinto, such that it protrudes beyond the lower surface of the second package housing 310. That is, this is because the surface of the heat sink 330 protruding downward beyond the lower surface of the second package housing 310 is intended to come into direct contact with a heat dissipation member (not shown) so as to maximize heat dissipation effects when the luminescent device is fabricated and applied in practice.

Further, as shown in Fig. 11, stepped portions 390a and 390b (collectively designated by 390) are doubly formed within the inner space of the first package housing 300, so that they can be used as fixing steps required for molding the encapsulant to be described later or for mounting the lens 120 with the total reflection surfaces and the refractive surface according to this embodiment.

Further, an outer surface of the insertion projection 340 of the heat sink 330 constituting the luminescent device is formed with a latching step 340a to be fixedly inserted into a groove formed in a wall defining the through-hole 350 in the second package housing 310, so that the insertion projection 340 of the heat sink 330 can be firmly fixed to the through-hole 350 of the second package housing 310. The latching step 340a may be formed on the body of the heat sink. The latching step 340a may be formed at an edge of an uppermost portion of the insertion projection 340 of the heat sink 330. At this time, the latching step 340a is coupled to the upper surface of the second package housing 310, thereby fixing the heat sink 330.

Meanwhile, in the luminescent device according to this modification, the encapsulant 450 for protecting the luminescent chip 400 and the connection wires 420 while transmitting light emitted from the luminescent chip 400 is molded within the inner space of the first package housing 300.

As shown in Fig. 12 (a), the encapsulant 450 may be epoxy resin and contain a fluorescent substance for converting light emitted from the luminescent chip 400.

In addition, the encapsulant 450 may contain a diffusing substance for uniform distribution of light.

Further, as shown in Fig. 12 (b), if the encapsulant 450 is epoxy resin containing a fluorescent substance, the encapsulant may be further molded with the epoxy resin 470 on the top thereof to obtain more stable molding effects.

Further, as shown in Fig. 12 (c), the luminescent device is molded with the encapsulant 450 as shown in Figs. 12 (a) and (b), and the lens 120 with the total reflection surfaces 121 and 122 and the refractive surface 123 according to the present invention is then fixed to the upper stepped portion 390b of the first package housing 300 to ensure side luminescence and to more stably protect the internal, mounted objects (luminescent chip and bonding wires).

Although the molding with the encapsulant and the subsequent fixing of the lens have been described in the above, this modification is not limited thereto. The encapsulant and the lens may be formed integrally with each other. That is, the encapsulant may be formed with total reflection surfaces and a refractive surface on the top thereof so that it can function as the lens of the present invention, or the lens may also be used as the encapsulant.

A luminescent device including the lens of the embodiment in accordance with a second modification will be described below with reference to the accompanying drawings.

Figs. 13 is a perspective view illustrating a lead frame for use in mass-producing the luminescent device according to the second modification of the embodiment, Fig. 14 is a flowchart illustrating a method of fabricating the luminescent device according to this modification, and Figs. 15 to 21 are perspective views illustrating the method of fabricating the luminescent device in accordance with the flowchart.

First, a lead frame in this modification will be described with reference to Figs. 13. Referring to Figs. 13, the lead frame 500 has a heat sink support ring 530 into which a heat sink can be inserted thereinto. The support ring 530 may be in the form of a circular ring as shown in the figure. However, it is not limited thereto but may be in the form of a polygonal ring.

In the meantime, an external frame 510 surrounds the support ring 530. The external frame 510 is located to be spaced apart from the support ring 530. The external frame 510 may be in the form of a square as shown in the figure. However, it is not limited thereto but may be in the form of a circle or other polygons.

The external frame 510 and the support ring 530 are connected by at least two connection terminals 550a and 550b. The connection terminals 550a and 550b are located on both opposite sides of the external frame 510 and fix the support ring 530 to the external frame 510.

Additional connection terminals except the connection terminals 550a and 550b may connect the support ring 530 to the external frame 510.

Further, at least two lead terminals 570a, 570b, 570c, 590a, 590b and 590c extend toward the support ring 530 from the external frame 510. However, the lead terminals are spaced apart from the support ring 530. As shown in the figure, the lead terminals 570a, 570b, 570c, 590a, 590b and 590c have wider distal ends in the vicinity of the support ring 530. Meanwhile, it is preferred that the lead terminals be arranged on both opposite sides of the external frame 510.

The number of required lead terminals is determined depending on the kinds and number of luminescent chips to be mounted and bonding wire-connecting methods. However, it is preferred that the lead frame 500 have a large number of lead terminals to be used in a variety of cases. As shown in the figure, the lead terminals are arranged in a direction perpendicular to the connection terminals 550a and 550b, so that a large number of lead terminals can be arranged in an identical direction.

The lead frame 500 according to an embodiment of the present invention can be fabricated by pressing a plate made of phosphor bronze, which is a copper alloy, using a press die. Meanwhile, although one lead frame 500 is shown in Figs. 13, a plurality of lead frames 500 may be fabricated and arranged in one phosphor bronze plate. In particular, a plurality of lead frames 500 fabricated in one phosphor bronze plate are used for mass production of the luminescent device.

Referring to Fig. 14, the lead frame 500 described above with reference to Figs. 13 is prepared (S01).

As described above, the lead frame 500 can be fabricated by pressing a phosphor bronze plate, and a plurality of lead frames 500 can be fabricated and arranged in one phosphor bronze plate.

Referring to Figs. 14 and 15, a heat sink 600 fixedly insertable into the support ring 530 of the lead frame 500 is prepared. The heat sink 600 has a top surface on which a luminescent chip is to be mounted. It is preferred that the top surface of the heat sink 600 have a diameter smaller than the inner diameter of the support ring 530 so that the heat sink can be easily inserted

thereinto and that the outer diameter of the side of the heat sink 600 be larger than the inner diameter of the support ring 530.

Further, the heat sink 600 may have a support ring-receiving groove 630a enabling the heat sink to be fastened to the support ring 530. Furthermore, the support ring-receiving groove 630a may be provided as a spiral groove for facilitating the fastening thereof to the support ring 530.

Meanwhile, the heat sink 600 may have a base 610 and a projection 630 protruding upwardly from the center of the base 610. At this time, the support ring-receiving groove 630a is disposed in a side surface of the projection 630. The base portion 610a and the projection 630 may be in the form of cylinders as shown therein. However, they are not limited thereto but may be in the form of polygonal posts. Although the projection 630 can have a shape similar to an inner shape of the support ring 530, it is not limited thereto. That is, the support ring 530 may be in the form of a circular ring, and the projection 630 may be in the form of a square post.

The heat sink 600 can be fabricated of a metal with high thermal conductivity or a thermal conductive resin using a press or molding technique. The heat sink 600 is fabricated using a process separate from a process of preparing the lead frame 500. Therefore, the order of the steps of preparing the lead frame 500 (S01) and the heat sink 600 (S03) may be changed, or the steps may be performed at the same time.

Referring to Figs. 14 and 16, the heat sink 600 is fixedly inserted into the support ring 530 of the lead frame 500 (S05). Since the outer diameter of the side of the heat sink 600 is larger than the inner diameter of the support ring 530, the heat sink 600 can be forcibly inserted into and fixed to the support ring 530.

Meanwhile, if the support ring-receiving groove 630a is formed, the support ring 530 is received in the support ring-receiving groove 630a and supports the heat sink 600. At this time, it is preferred that a portion of the support ring 530 be received in the support ring-receiving groove 630a, and the remainder thereof protrude to an outer surface of the projection 630, as shown in figure. Further, if the support ring-receiving groove 630a a spiral groove, the heat sink 600 can be screwed and fastened to the support ring 530.

Referring to Figs. 14 and 17a, after the heat sink 600 is fixed to the lead frame 500, a package body 700 is formed using an insert molding technique (S07). The package body 700 can be formed through insert molding with a thermosetting or thermoplastic resin.

The package body 700 is formed around the heat sink 600 to support the support ring 530, the connection terminals 550a and 550b, the lead terminals 570a, 570b, 570c, 590a, 590b and 590c, and the heat sink 600. Some portions of the connection terminals and the lead terminals protrude to the outside of the package body 700. Further, the package body 700 has an opening through which an upper end of the heat sink 600 and the lead terminals are exposed.

As shown in Fig. 17a, some portions of the support ring 530 and the connection terminals 550a and 550b can be exposed through the opening. Accordingly, a groove is formed in the top of the package body 700. On the contrary, as shown in Fig. 17b, the package body 700 can cover most portions except the upper end of the heat sink 600, and expose only some portions of the lead terminals. Thus, a plurality of sub-openings can be defined.

Even in this case, it is preferred that a groove surrounded by the sidewall of the package body be also formed at an upper portion of the package body 700, as shown in the figure. Further, the lower surface of the heat sink 600 is exposed to the outside. In addition thereto, the side of the base portion 610 may also be exposed. Accordingly, heat dissipation through the heat sink 600 can be promoted.

Meanwhile, although the package body 700 can take the shape of a cylinder, as shown in Figs. 17a and 17b, it is not limited thereto but may be the shape of a polygonal post such as a square post.

After the heat sink 600 is coupled to the lead frame 500, the package body 700 is formed by insert-molding a thermosetting or thermoplastic resin, so that the heat sink 600 and the package body 700 are strongly coupled to with each other.

Referring to Figs. 14 and 18a, portions of the connection terminals 550a and 550b, which protrude to the outside of the package body 700, are cut and removed (S09). As a result, the cut connection terminals 560a and 560b are left in the package body 700, and these connection terminals and the support ring 530 more prevent the heat sink 600 from being separated from the package body 700.

In the meantime, while the connection terminals are cut, the remainder of the lead terminals except some lead terminals, which are intended to be used for applying a current, among the lead terminals protruding to the outside of the package body 700 may be cut and removed together with the connection terminals. For example, as shown in Fig. 18b, in a case where only two lead terminals 570c and 590c are needed, the remainder of the lead terminals

570a, 570b, 590a and 590b are cut and removed. Further, as shown in Fig. 18c, in a case where four lead terminals 570a, 570c, 590a and 590c are needed, the remainder of the lead terminals 570b and 590b are cut and removed.

The process of cutting and removing the lead terminals is a process performed in a case where lead terminals of which the number is larger than that of lead terminals required in a luminescent device are provided in the lead frame 500. Thus, if the number of lead terminals required in a luminescent device is identical with that of lead terminals provided in the lead frame 500, the process of cutting and removing lead terminals is not performed. Further, since left excess lead terminals, if any, do not influence the operation of a luminescent device, the process of cutting and removing the excess lead terminals is not an inevitable process.

Referring to Figs. 14 and 19, luminescent chips 800 are mounted on an upper surface of the heat sink 600 (S11). The luminescent chip 800 may be a one-bond die with an electrode on each of top and bottom surfaces thereof or a two-bond die with two electrodes on a top surface thereof.

If the luminescent chip 800 is a one-bond die, it is preferred that the heat sink 600 be made of a metallic material with electric conductivity. At this time, the luminescent chip 800 is mounted on the heat sink 600 by means of an electric conductive adhesive such as silver epoxy. Otherwise, if all the luminescent chips 800 to be mounted on the heat sink 600 are two-bond dies, the heat sink 600 is not necessarily to be electrically conductive, and they may be mounted on the heat sink 600, for example, by means of various kinds of thermally conductive adhesives.

In the meantime, a plurality of luminescent chips 800 may be mounted on the heat sink 600. Further, the plurality of luminescent chips 800 may be luminescent chips that can emit light with different wavelengths. For example, as shown in Fig. 19, three luminescent chips 800 can be mounted. At this time, the luminescent chips 800 may be luminescent chips for respectively emitting red, green and blue light. Accordingly, a luminescent device emitting light with all kinds of colors can be provided using the luminescent chips 800.

Referring to Figs. 14 and 20a, luminescent chips 810, 830 and 850 and the lead terminals 570a, 570b, 570c, 590a, 590b and 590c are electrically connected through bonding wires (S13). In a case where all the luminescent chips 810, 830 and 850 are two-bond dice, each of the luminescent chips is connected to two lead terminals through two bonding wires. Meanwhile, as shown in the figure, the luminescent chips 810, 830 and 850 can be electrically connected to

different pairs of lead terminals, respectively. Moreover, one common lead terminal (e.g., 570b) and the luminescent chips can be connected through the bonding wires, and the other lead terminals (e.g., 590a, 590b, 590c) located at a side opposite to the common lead terminal can be connected to the luminescent chips through different bonding wires, respectively. In this case, the luminescent chips can be driven with different currents, respectively.

Meanwhile, as shown in Fig. 20b, a one-bond luminescent chip 810a and two-bond luminescent chips 830 and 850 can be mounted together. At this time, one lead terminal 570b of the lead terminals is electrically connected to the heat sink 600 through a bonding wire. Therefore, the lead terminal 570b is electrically connected to a bottom surface of the one-bond luminescent chip 810a through a bonding wire and the heat sink 600. There are various combinations of one-bond dies and two-bond dies, and one of various methods of connecting bonding wires in the combinations can be selected.

Further, one of various methods of connecting lead terminals to luminescent chips can be selected, and a plurality of luminescent chips may be connected in series, in parallel or in series-parallel.

In the meantime, after the luminescent chips 810, 830 and 850 and the lead terminals are connected through the bonding wires, the luminescent chips 810, 830 and 850 are encapsulated with an encapsulant (not shown) (S15). The encapsulant can encapsulate the luminescent chips and the bonding wires by filling the opening of the package body 700.

Further, the encapsulant can contain a fluorescent substance. For example, the fluorescent substance can convert the color of light from blue into yellow, or into green and red. Thus, if a luminescent chip emitting blue light is mounted on the heat sink 600, it is possible to provide a luminescent chip emitting white light to the outside by converting some of light emitted from the luminescent chip into yellow, or green and red light. In addition thereto, the encapsulant may further contain a diffusing substance. The diffusing substance prevents the luminescent chips and the bonding wires from being viewed from the outside by dispersing light emitted from the luminescent chips, and the diffusing substance also enables light to be uniformly emitted to the outside.

After the luminescent chips are encapsulated with the encapsulant, the lens 120 with the total reflection surfaces 121 and 122 and the refractive surface 123 according to this embodiment is attached on the package body 700 (S17). The lens 120 is used to emit light within a

predetermined directional angle, which guides and emits light from the luminescent chip 800 toward the side of the lens in this embodiment.

Although the processes of forming the encapsulant and attaching the lens have been described above as separate processes for the sake of convenience of description, it is not limited thereto, and the luminescent chips may be encapsulated directly with a lens with total reflection surfaces and a refractive surface. That is, the total reflection surfaces and the refractive surface may be formed on the top of the encapsulant.

Referring to Figs. 14 and 21, the lead terminals 570a, 570b, 570c, 590a, 590b and 590c are cut from the external frame 510 and then bent (S19). As a result, a luminescent device that can be subjected to surface mounting is obtained. Meanwhile, the step of cutting and removing the connection terminals (S09) may be performed together with step S19.

Next, the luminescent device of this modification will be described with reference to Fig. 21.

Referring back to Fig. 21, the luminescent device includes the heat sink support ring 530. The support ring 530 is made of a copper alloy such as phosphor bronze. Although the support ring 530 can take the shape of a circular ring as shown in the figure, it is not limited thereto but may take the shape of a polygonal ring. The cut connection terminals 560a and 560b are disposed while extending from the outside of the support ring 530. The cut connection terminals 560a and 560b can be located at opposite sides of the support ring 530.

As described with reference to Fig. 15, the heat sink 600 is inserted into the support ring 530.

Meanwhile, at least two lead terminals 570a, 570b, 570c, 590a, 590b and 590c are arranged at the both sides of the support ring while being spaced apart from the support ring 530 and the heat sink 600. The lead terminals may be bent to enable surface mounting.

In addition thereto, the package body 700 supports the heat sink 600 and the lead terminals by means of molding. The package body 700 has the opening through which the upper end of the heat sink 600 and some portions of the lead terminals are exposed at the upper portion of the package body. Meanwhile, the portions of the lead terminals protruding outward through the sidewall of the package body 700.

As described with reference to Fig. 17a, some portions of the support ring 530 and the connection terminals 550a and 550b can be exposed through the opening. Accordingly, the

grooves are formed at the upper portion of the package body 700. Further, as described with reference to Fig. 17b, the package body 700 can cover most portions except the upper end of the heat sink 600 and expose only some portions of the lead terminals. Thus, a plurality of openings can be formed. Even in this case, it is preferred that the package body 700 have the groove surrounded by the sidewall of the package body as shown in Fig. 17b.

The package body 700 is a plastic resin body formed by insert-molding a thermosetting or thermoplastic resin after the heat sink 600 is fixedly inserted into the support ring 530.

The luminescent chips 810, 830 and 850 are mounted and located on the upper surface of the heat sink 600. Although the luminescent chips shown in Fig. 21 are two-bond dies, they are not limited thereto. The luminescent chips may be one-bond dies or a combination of one-bond and two-bond dies.

The luminescent chips are electrically connected to the lead terminals through the bonding wires. In a case where the luminescent chips are two-bond dies, each of the luminescent chips is electrically connected to two lead terminals through two bonding wires. Meanwhile, in a case where at least one of the luminescent chips is a one-bond die, the heat sink is electrically connected to at least one lead terminal through a bonding wire.

There are various methods of connecting the lead terminals and the luminescent chips and one of them can be selected according to characteristics of required luminescent chips.

Meanwhile, the lens 120 with the total reflection surfaces 121 and 122 and the refractive surface 123 according to this embodiment covers and encapsulates the luminescent chips. As described above, the luminescent device with the lens according to this embodiment is not limited to the aforementioned modification but may be applied to various kinds of luminescent chips.

Further, the present invention is not limited to the shape of the lens according to the embodiment but may further include a linear refractive surface.

A lens further comprising a horizontal linear refractive surface according to a second embodiment will be described below. In the following second embodiment, a description thereof overlapping with that of the previous embodiment will be omitted. Moreover, a description of a modification of a luminescent device with the lens will also be omitted since it overlaps with that of the previous embodiment.

<Embodiment 2>

Fig. 22a is a conceptual sectional view of a luminescent device with a lens according to a second embodiment of the present invention, Fig. 22b is a perspective of the lens according to the second embodiment, Fig. 23 is a conceptual view illustrating the operation of the total internal reflection lens according to the second embodiment, and Fig. 24 is a graph showing simulation results of the luminescent device according to the second embodiment.

Referring to Figs. 22a, 22b and 23, the lens of this embodiment comprises a first total reflection surface 1121 with a V-shaped section and a certain slope with respect to a central axis x; a second total reflection surface 1122 with a slope smaller than that of the first total reflection surface 1121; a linear first refractive surface 1123a extending from a periphery of the second total reflection surface 1122 in a direction perpendicular to the central axis x; and a curved second refractive surface 1123b extending downward from a periphery of the linear first refractive surface 1123a.

As shown in Fig. 22a, the first total reflection surface 1121 is formed in the shape of a V-shaped recess above a luminescent chip 1110, and the second total reflection surface 1122 is formed to extend upward from the recess and to have a gradient smaller than that of the first reflection surface 1121 with respect to the central axis x. Meanwhile, the linear refractive surface 1123a is made in the form of a straight line parallel to a substrate 1100 on which the luminescent chip 1110 is to be mounted, and the curved second refractive surface 1123b is made in the form of a downward round curve extending from the first refractive surface 1123a. Of course, the first refractive surface 1123a may be formed to be parallel to the bottom of the lens 120. The first and second refractive surfaces 1123a and 1123b refer to surfaces that refract light guided to an edge of the lens toward the side thereof.

Assuming that the diameter of the entire lens 120 is 1 in the above, the first reflection surface 1121 is formed at the center of the lens 1120, and the maximum diameter of the first reflection surface 1121 is 1/12 to 1/6; the second reflection surface 1122 is formed to cover the first reflection surface 1121 and has the maximum diameter of 1/7 to 1/3; the first refractive surface 1123a is constructed in the form of a circular strip to surround the second reflection surface 1122 and has the maximum diameter of 1/5 to 2/3; and the diameter of the second refractive surface 1123b is identical with that of the entire lens 1120. Here, the width of the circular strip-shaped first refractive surface 1123a is 1/16 to 1/8 of the diameter of the lens.

Assuming that the height of the lens 1120 is 1, the height of the first reflection surface 1121 is 1/6 to 1/2, and the height of the second reflection surface 1122 is 1/6 to 1/2.

The second refractive surface 1123b is made in the form of an ellipse as shown in Fig. 22a, and a ratio of minor and major axes of the ellipse is in a range of 1:4 or less. That is, it may be a circle.

At this time, the slope of each of the total reflection surfaces 1121 and 1122 is set such that an angle defined by the total reflection surface and light, which is emitted from the luminescent chip 1110 and is then incident on the total reflection surface, becomes greater than a critical angle, as described above. That is, since the critical angle varies depending on a refractive index of the lens 1120, the lens 1120 of this embodiment is formed of a material with a refractive index of 1.2 to 2.0 so that the critical angle can be in a range of 30 to 60 degrees.

In order to cause the angle defined by the total reflection surface and light incident on the total reflection surface 1121 or 1122 to be greater than the critical angle, the slope of the first reflection surface 1121 is 30 to 89 degrees, and that of the second reflection surface 1122 is 20 to 60 degrees in this embodiment. At this time, the slopes refer to angles defined by the first and second reflection surfaces 1121 and 1122, and the lower substrate 1100. Preferably, the slope of the first total reflection surface 1121 is 40 to 70 degrees and that of the second total reflection surface 1122 is 30 to 50 degrees. Further, it is preferred that the slope of the first refractive surface 1123a be formed to be 10 degrees or less. However, it has been previously described as being in a horizontal state where its slope is zero.

Accordingly, as shown in Fig. 23, light R2 and R3, which is emitted from a light source (luminescent chip) and incident on the first and second total reflection surfaces 1121 and 1122, is totally reflected, and then emerges in a y-axis direction through the rounded second refractive surface 1123b. Light R4 and R1 incident on the first and second refractive surfaces 1123a and 1123b are refracted and then emerge in the y-axis direction.

As such, the lens 1120 of the present invention is formed to have the total reflection surfaces with different slopes at a central portion thereof, and the horizontal surface and the rounded surface at an edge portion thereof, so that a peak value of luminous intensity can be in a range of ±10 with respect to ±83, as shown in Fig. 24.

In Fig. 24, a lens 1120 with a refractive index of 1.5 was used such that an angle defined by the first total reflection surface 1121 and light emitted from the luminescent chip 1110

became about 50 degrees greater than the critical angle, and an angle defined by the second total reflection surface 1122 and light emitted from the luminescent chip 1110 became about 43 degrees. Then, luminous intensity was simulated in a range of +90 to -90 with respect to a region where the luminescent chip 1110 was located, and the results are shown in the graph. As shown in the graph of Fig. 24, the luminous intensity is the highest in the vicinity of ±83 degrees. That is, the luminous intensity is about 0.97 at +83 degrees and about 0.94 at -83 degrees. Further, the luminous intensity is not greater than 0.2 within ±40.

This is because light totally reflected on the first and second reflection surfaces 1121 and 1122, and light refracted through the first and second refractive surfaces 1123a and 1123b travels in the side direction of the luminescent device.

The lens 1120 of the present invention may be fabricated by means of an injection molding process or a grinding process of grinding a top surface of the lens 1120 with an elliptical curved surface. In a case of fabricating the lens of the present invention in this manner, since the lens is composed of the horizontal linear surface and the elliptical curved surface, its fabrication is facilitated, thereby reducing a defective rate and fabrication costs.

In addition, as described in the previous embodiment, as compared with the aforementioned prior art in which a plurality of refractive surfaces of a lens have their slopes over certain distances, resulting in a large size, the present invention enables improvement of side-luminescence effects and fabrication of a lens with a compact size since the lens has double refractive surfaces that are in the form of a straight line and an ellipse. Further, the conventional lens has the refractive surfaces indented toward a central axis, but the lens of the present invention has the refractive surface formed to extend outward from the periphery of the total reflection surface.

Although the most preferred embodiment in which the luminescent chip is encapsulated by the lens has been described in the present invention, a certain space (not shown) may be formed between the luminescent chip and the lens. At this time, a material with a refractive index of 1.2 to 2.0 can be selected as a material filled into the space. For example, the space may be filled with epoxy/silicon resin or air/another gas (e.g. nitrogen), or may be under a vacuum condition. Here, a fluorescent material can be further included in the space.

Moreover, although the lens includes the linear surface and the curved surface extending therefrom, it is not limited thereto but may be modified into various shapes. That is, the lens

may include a linear surface extending from a curved surface, and the linear surface may be bent. Next, a side-luminescence lens with a linear surface extending from a curved surface and bent once, and a luminescent device with the lens according to a third embodiment of the present invention will be described below.

In the following third embodiment, a description thereof overlapping with that of the aforementioned embodiment will be omitted. Further, since a description of a modification of a luminescent device with the lens overlaps with that of the aforementioned embodiment, the description will be omitted.

<Embodiment 3>

Fig. 25a is a conceptual sectional view of a luminescent device with a lens according to a third embodiment of the present invention, Fig. 25b is a perspective view of the lens according to the third embodiment, Fig. 26 is a conceptual view illustrating the operation of the total internal reflection lens according to the third embodiment, and Fig. 27 is a graph showing simulation results of the luminescent device according to the third embodiment.

Referring to Figs. 25a, 25b and 26, the lens of this embodiment comprises a first total reflection surface 2121 with a V-shaped section and a certain slope with respect to a central axis x; a second total reflection surface 2122 with a slope smaller than that of the first total reflection surface 2121; a curved first refractive surface 2123a extending downward from a periphery of the second total reflection surface 2122; a linear second refractive surface 2123b extending from a periphery of the first refractive surface 2123a in a direction perpendicular to the central axis x; and a linear third refractive surface 2123c extending from a periphery of the second refractive surface 2123b in a direction parallel to the central axis x.

As shown in Figs. 25a and 25b, assuming that the diameter of the entire lens 2120 is 1, the first reflection surface 2121 is formed at a central portion of the lens 2120, and the maximum diameter of the first total reflection surface 2121 is 1/12 to 1/6; and the second reflection surface 2122 is formed to surround the first total reflection surface 2121, and the maximum diameter thereof is 1/7 to 1/3. The first refractive surface 2123a is made in the form of an ellipse surrounding the second total reflection surface 2122, and the maximum diameter thereof is 1/2 to 7/8; and the maximum diameter of the second and third refractive surfaces 2123b and 2123c is

the same as the entire lens 2120. Here, the width of the second refractive surface 2123b is 1/16 to 1/8 of the diameter of the lens.

Further, assuming that the height of the lens 2120 is 1, the height of the first total reflection surface 2121 is 1/12 to 1/6; the height of the second total reflection surface 2123 is 1/12 to 1/6; the height of the first refractive surface 2123a is 1/4 to 3/4; and the height of the third refractive surface 2123c is 1/4 to 3/4. Here, the first refractive surface 2123a is made in the form of an ellipse as shown in the figures, and a ratio of minor and major axes of the ellipse is formed in a range of 1:4 or less. That is, it may be a circle.

Accordingly, as shown in Fig. 26, light R4 and R5, which is emitted from a light source (luminescent chip) and is then incident on the first and second total reflection surfaces 2121 and 2122 is totally reflected, and emerges in a y-axis direction through the downward rounded second refractive surface 1123b. Light R3, R2 and R1 incident on the first, second and third refractive surfaces 2123a, 2123b and 2123c is refracted and then emitted in the y-axis direction.

As such, the lens 1120 of the present invention is formed to have total the reflection surfaces with different slopes at the central portion thereof, and the rounded, horizontal and vertical surfaces at an edge thereof, so that a peak value of luminous intensity is located in a range of ±10 with respect to ±64, as shown in Fig. 27.

In Fig. 27, a lens 2120 with a refractive index of 1.5 was used such that an angle defined by the first total reflection surface 2121 and light emitted from the luminescent chip 2110 became about 50 degrees greater than a critical angle, and an angle defined by the second total reflection surface 2122 and light emitted from the luminescent chip 2110 became about 43 degrees. Then, luminous intensity is simulated in a range of +90 to -90 with respect to a region where the luminescent chip 1110 was located, and the results are shown in the graph.

As shown in the graph of Fig. 27, the luminous intensity is the highest in the vicinity of ±64 degrees. That is, the luminous intensity is about 0.99 at +64 degrees and about 0.98 at -64 degrees. Further, the luminous intensity is not greater than 0.2 within ±40 degrees.

As described above, this is because light totally reflected on the first and second reflection surfaces 2121 and 2122, and light refracted through the first to third refractive surfaces 2123a, 2123b and 2123c travels in the side direction of the luminescent device.

Since a method of fabricating the lens and a luminescent device with the lens are the same as the aforementioned embodiment, descriptions thereof will be omitted.

A side-luminescence lens with a linear surface bent twice and a curved surface extending therefrom, and a luminescent device with the lens according to a fourth embodiment of the present invention will be described below.

In the following fourth embodiment, a description thereof overlapping with that of the aforementioned embodiment will be omitted. Further, since a description of a modification of a luminescent device with the lens overlaps with that of the aforementioned embodiment, the description will be omitted.

<Embodiment 4>

Fig. 28a is a conceptual sectional view of a luminescent device with a lens according to a fourth embodiment of the present invention, Fig. 28b is a perspective view of the lens according to the fourth embodiment, Fig. 29 is a conceptual view illustrating the operation of the total internal reflection lens according to the fourth embodiment, and Fig. 30 is a graph showing simulation results of the luminescent device according to the fourth embodiment.

Referring to Figs. 28a, 28b and 29, the lens of this embodiment comprises a first total reflection surface 3121 with a V-shaped section and a certain slope with respect to a central axis x; a second total reflection surface 3122 with a slope smaller than that of the first total reflection surface 3121; a linear first refractive surface 3123a extending from a periphery of the second total reflection surface 3122 in a direction perpendicular to the central axis x; a linear second refractive surface 3123b extending downward in parallel to the central axis x from a periphery of the first refractive surface 3123a; a linear third refractive surface 3123c extending from a periphery of the second refractive surface 3123b in the direction perpendicular to the central axis x; and a curved fourth refractive surface 3123d extending downward from a periphery of the third refractive surface 3123c.

As shown in Figs. 28a and 28b, assuming that the diameter of the entire lens 3120 is 1, the maximum diameter of the first total reflection surface 3121 is 1/12 to 1/6, and the maximum diameter of the second total reflection surface 3122 is 1/7 to 1/3. The maximum diameter of the first refractive surface 3123a is 1/6 to 1/2, and the width of the first refractive surface 3123a is 1/36 to 1/24 of the diameter of the lens 3120. The maximum diameter of the third refractive surface 3123c is 1/5 to 2/3, and the width of the third refractive surface 3123c is 1/24 to 1/7. The diameter of the fourth refractive surface 3123d is the same as the entire lens 3120.

Further, assuming that the height of the lens 3120 is 1, the height of the first total reflection surface 3121 is 1/4 to 3/4; the height of the second total reflection surface 3122 is 1/6 to 1/4; the height of the second refractive surface 3123b is 1/12 to 1/8; and the height of the fourth refractive surface 3123d is 7/8 to 11/12. Here, the fourth refractive surface 3123d is made in the form of an ellipse as shown in the figures, and a ratio of minor and major axes of the ellipse is in a range of 1:4 or less. That is, it may be a circle.

Accordingly, as shown in Fig. 29, light R2 and R6, which is emitted from a light source (luminescent chip) and is then incident on the first and second total reflection surfaces 3121 and 3122, are totally reflected, and emerges in a y-axis direction through the refractive surfaces 3123a, 3123b, 3123c and 3123d. Light R5, R4, R3 and R1 incident on the first to fourth refractive surfaces 3123a, 3123b, 3123c and 3123d are refracted and emerges in the y-axis direction.

As such, the lens 120 of the present invention is formed to have the total reflection surfaces with different slopes at a central portion thereof, and the rounded surface and the plurality of horizontal and vertical surfaces at an edge thereof, so that a peak value of luminous intensity is in a range of ±10 with respect to ±76 as shown in Fig. 30.

In Fig. 30, a lens 3120 with a refractive index of 1.5 was used such that an angle defined by the first total reflection surface 3121 and light emitted from the luminescent chip 3110 became about 50 degrees greater than a critical angle, and an angle defined by the second total reflection surface 3122 and light emitted from the luminescent chip 3110 became about 43 degrees. Then, luminous intensity is simulated in a range of +90 to -90 with respect to a region where the luminescent chip is located, and the results are shown in the graph.

As shown in the graph of Fig. 30, the luminous intensity is the highest in the vicinity of ±76 degrees. That is, the luminous intensity is about 0.98 at +76 degrees and about 0.97 at -77 degrees. Further, the luminous intensity is not greater than 0.2 within ±40 degrees.

Since a method of fabricating the lens and a luminescent device with the lens are the same as the aforementioned embodiment, descriptions thereof will be omitted.

A side-luminescence lens with a linear surface bent once and a curved surface extending therefrom, and a luminescent device with the lens according to a fifth embodiment of the present invention will be described below.

In the following fifth embodiment, a description thereof overlapping with that of the aforementioned embodiment will be omitted. Further, since a description of a modification of a luminescent device with the lens overlaps with that of the aforementioned embodiment, the description will be omitted.

<Embodiment 5>

Fig. 31a is a conceptual sectional view of a luminescent device with a lens according to a fifth embodiment of the present invention, Fig. 31b is a perspective view of the lens according to the fifth embodiment, Fig. 32 is a conceptual view illustrating the operation of the total internal reflection lens according to the fifth embodiment, and Fig. 33 is a graph showing simulation results of the luminescent device according to the fifth embodiment.

Referring to Figs. 31a, 31b and 32, the lens of this embodiment comprises a first total reflection surface 4121 with a V-shaped section and a certain slope with respect to a central axis x; a second total reflection surface 4122 with a slope smaller than that of the first total reflection surface 4121; a linear first refractive surface 4123a extending downward from a periphery of the second total reflection surface 4122 in a direction parallel to the central axis x; a linear second refractive surface 4123b extending from a periphery of the first refractive surface 4123a in the direction perpendicular to the central axis x; and a curved third refractive surface 4123c extending downward from a periphery of the second refractive surface 4123b.

As shown in Figs. 31a and 31b, assuming that the diameter of the entire lens 4120 is 1, the maximum diameter of the first total reflection surface 4121 is 1/12 to 1/6, and the maximum diameter of the second total reflection surface 4122 is 1/7 to 1/3. The maximum diameter of the second refractive surface 4123b is 1/6 to 2/3, and the width of the second refractive surface 4123b is 1/12 to 1/6 of the diameter of the lens 4120. The diameter of the third refractive surface 4123c is the same as the entire lens.

Further, assuming that the height of the lens 4120 is 1, the height of the first total reflection surface 4121 is 1/4 to 3/4; the height of the second total reflection surface 4122 is 1/6 to 1/4; the height of the first refractive surface 4123a is 1/12 to 1/8; and the height of the third refractive surface 4123c is 7/8 to 11/12. Here, the third refractive surface 4123c is made in the form of an ellipse as shown in the figures, and a ratio of minor and major axes of the ellipse is in a range of 1:4 or less. That is, it may be a circle.

Accordingly, as shown in Fig. 32, light R2 and R4, which is emitted from a light source (luminescent chip) and is then incident on the first and second total reflection surfaces 4121 and 4122, are totally reflected, and emerges in a y-axis direction through the refractive surfaces 4123a, 4123b and 4123c. Light R5, R3 and R1 incident on the first to third refractive surfaces 4123a, 4123b and 4123c are refracted and emerges in the y-axis direction.

As such, the lens 120 of the present invention is formed to have the total reflection surfaces with different slopes at a central portion thereof, and the rounded surface and the plurality of horizontal and vertical surfaces at an edge thereof, so that a peak value of luminous intensity is in a range of ±10 with respect to ±70 as shown in Fig. 33.

In Fig. 33, a lens 4120 with a refractive index of 1.5 was used such that an angle defined by the first total reflection surface 4121 and light emitted from the luminescent chip 4110 became about 50 degrees greater than a critical angle, and an angle defined by the second total reflection surface 4122 and light emitted from the luminescent chip 4110 became about 43 degrees. Then, luminous intensity is simulated in a range of +90 to -90 with respect to a region where the luminescent chip is located, and the results are shown in the graph.

As shown in the graph of Fig. 33, the luminous intensity is the highest in the vicinity of ±70 degrees. That is, the luminous intensity is about 1.0 at +70 degrees and about 0.97 at -70 degrees. Further, the luminous intensity is not greater than 0.2 within ±40 degrees.

What is claimed is:

1. A lens, comprising:

a body;

a total reflection surface with a total reflection slope with respect to a central axis of the body; and

a linear and/or curved refractive surface(s) formed to extend from a periphery of the total reflection surface.

2. The lens as claimed in claim 1, wherein the refractive surface comprises:

a linear refractive surface formed by being bent at the periphery of the total reflection surface; and

a curved refractive surface formed to extend from a periphery of the linear refractive surface.

3. The lens as claimed in claim 1, wherein the refractive surface comprises:

a curved refractive surface formed to extend from the periphery of the total reflection surface; and

a linear refractive surface formed by being bent at a periphery of the curved refractive surface.

4. The lens as claimed in any one of claims 1, wherein the curved refractive surface takes the shape of an ellipse, and a ratio of minor and major axes of the ellipse is 1:4 or less.

5. The lens as claimed in any one of claims 1, wherein the linear refractive surface is bent more than once.

6. The lens as claimed in claim 1, wherein the total reflection surface comprises:

a first total reflection surface having a section in the form of a V-shaped recess with a predetermined slope; and

a second total reflection surface extending upward from a periphery of the first total reflection surface and formed to be sloped with a gradient smaller than that of the first total reflection surface.

7. The lens as claimed in claim 1, wherein the refractive index of the body is 1.2 to 2.0.

8. A luminescent device, comprising:

a package housing with an opening and a through-hole exposed by the opening;

a lead terminal having an inner portion exposed within the opening of the package housing and an outer portion extending from the inner portion and protruding to the outside of the package housing;

a heat sink coupled to a lower portion of the package housing and having a portion exposed through the opening ; and

a lens including a total reflection surface encapsulating the package housing and having a total reflection slope, and a refractive surface formed to extend from a periphery of the total reflection surface.

9. The luminescent device as claimed in claim 8, wherein the package housing comprises first and second housings mutually coupled to each other with the lead terminal interposed therebetween, and the opening is formed in the first housing.

10. The luminescent device as claimed in claim 8, wherein the heat sink comprises:

a heat sink body corresponding to a bottom surface of the package housing; and

an insertion projection protruding upward from a central portion of the heat sink body and inserted into the through-hole of the package housing.

11. The luminescent device as claimed in claim 10, wherein the heat sink has a coupling projection on at least one of the heat sink body and the insertion projection.

12. A luminescent device, comprising:

a heat sink support ring;

a heat sink inserted into the support ring;

at least two lead terminals arranged at both sides of the support ring while being spaced apart from the support ring and the heat sink;

a package body for molding the heat sink and the lead terminals to support them, the package body having an opening through which an upper portion of the heat sink and portions of the lead terminals are exposed; and

a lens including a total reflection surface encapsulating the package body and having a total reflection slope, and a refractive surface formed to extend from a periphery edge of the total reflection surface.

13. The luminescent device as claimed in claim 12, wherein the heat sink has a base and a projection protruding upward from the base at the center thereof, and the projection is inserted into the support ring.

14. The luminescent device as claimed in claim 13, wherein the heat sink further comprises a support ring-receiving groove in a side surface of the projection so that the support ring-receiving groove can be fastened to the support ring.

15. The luminescent device as claimed in claim 12, wherein the package body is a plastic resin body formed by insert-molding a thermosetting or thermoplastic resin after the heat sink is inserted into the support ring.

ABSTRACT

The present invention relates to a side-luminescence lens and a luminescent device using the same, and provides a body, a total reflection surface with a total reflection slope with respect to a central axis of the body, and a linear and/or curved refractive surface(s) formed to extend from a periphery of the total reflection surface; and a luminescent device including the lens. According to the present invention, a lens with total internal reflection surfaces with different slopes, and a linear and/or curved refractive surface(s) allows light emitted forward from a luminescent chip to be guided to a side of the lens. Further, a linear surface(s) formed in a direction perpendicular or parallel to a central axis of a lens and a curved surface are formed on an edge of the lens so that a process of fabricating the lens is facilitated, thereby reducing a defective rate and fabrication costs of the lens.

【Fig 1a】

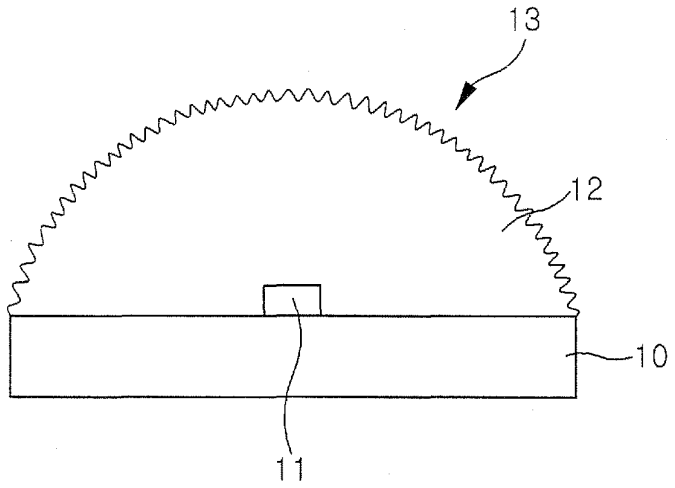

【Fig 1b】

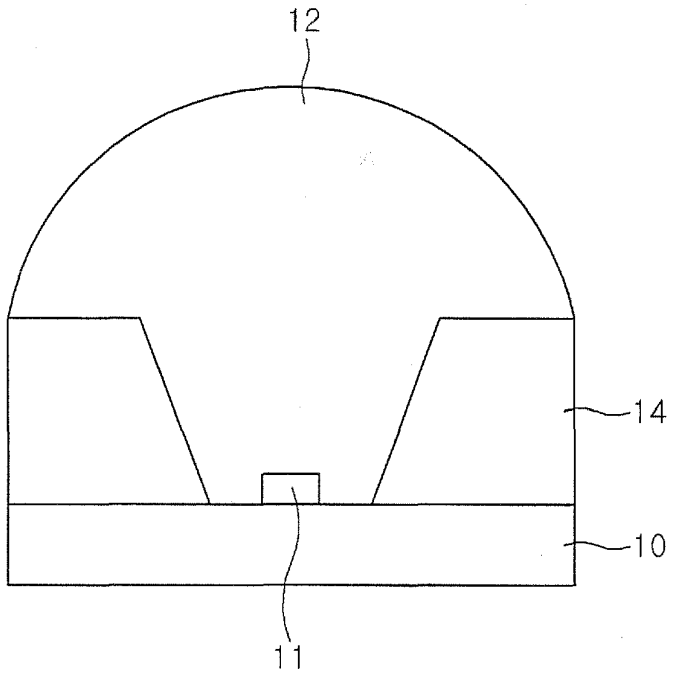

【Fig 2】

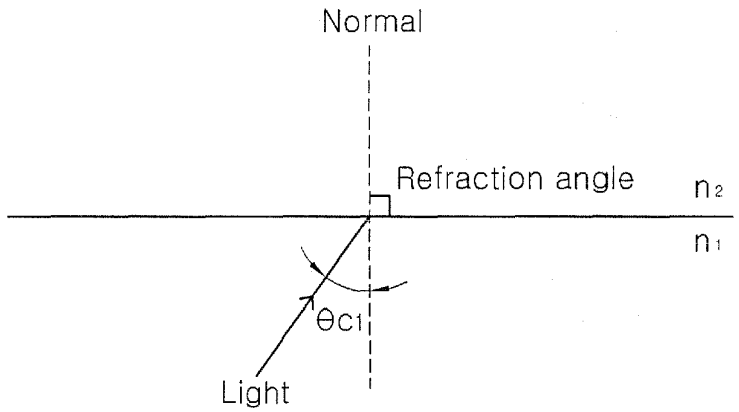

(a)

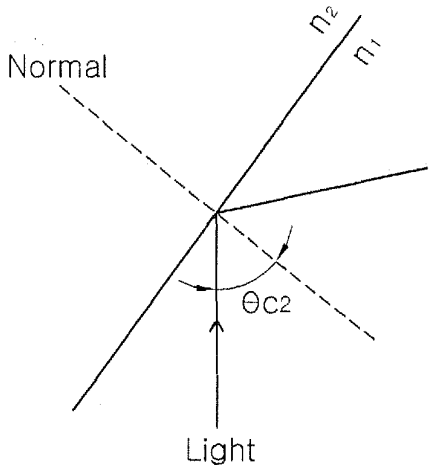

(b)

【Fig 3a】

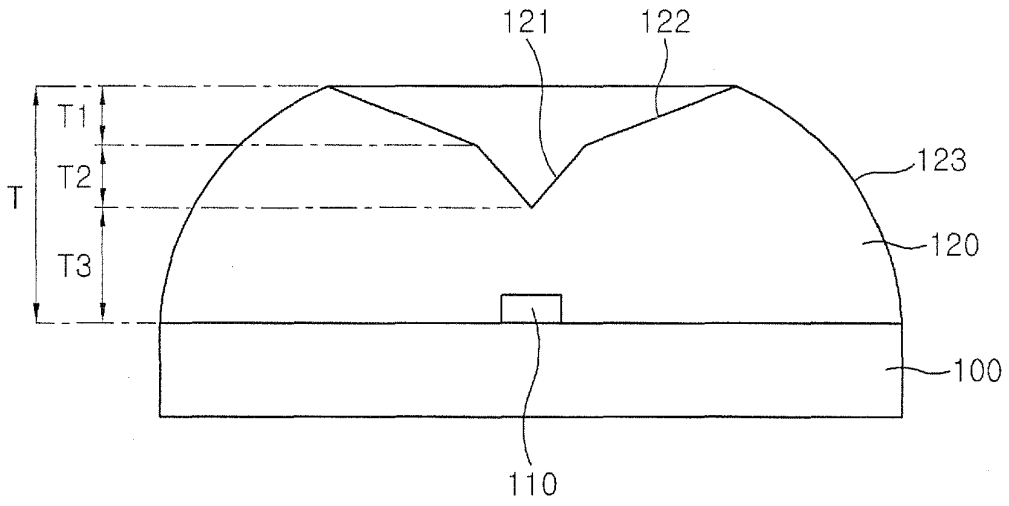

【Fig 3b】

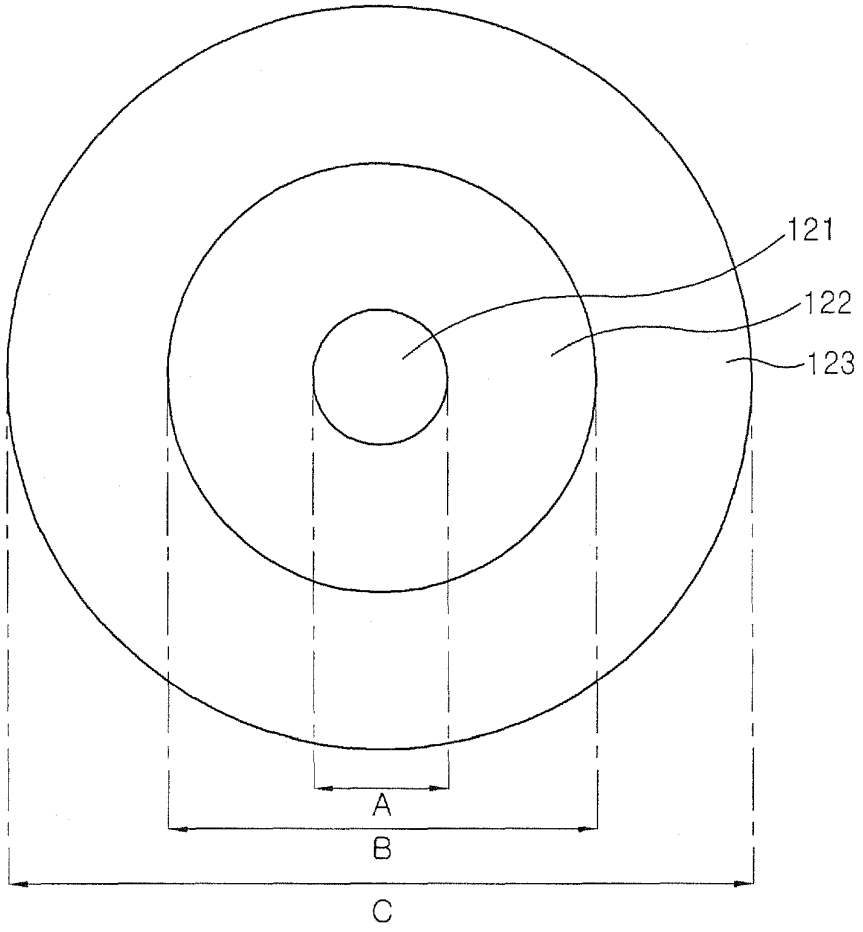

【Fig 4】

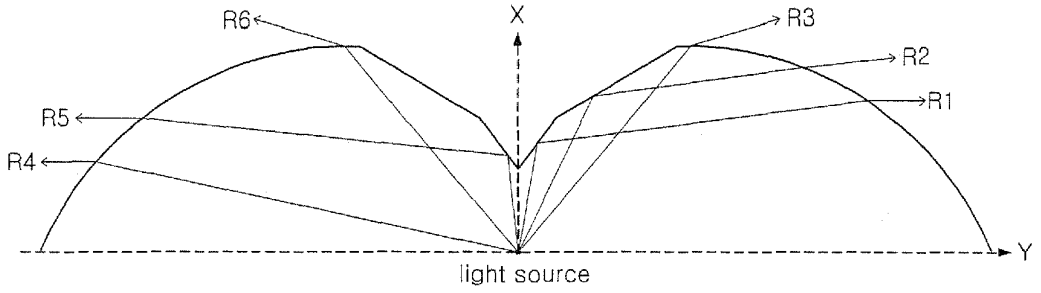

【Fig 5】

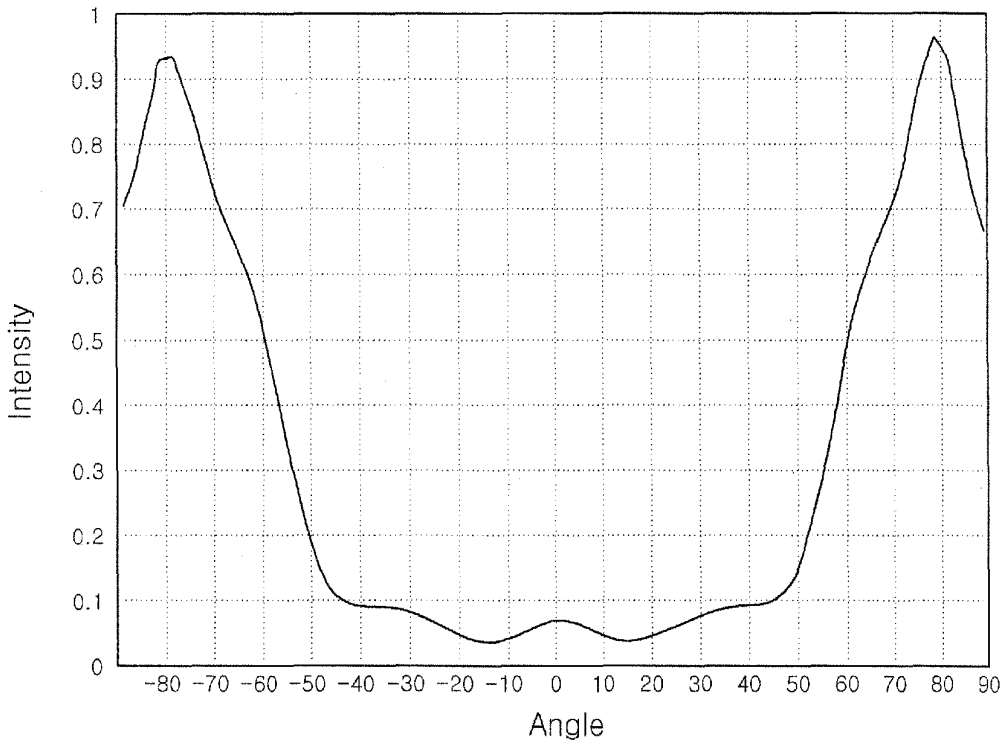
Intensity
1
0.9
0.8
0.7
0.6
0.5
0.4
0.3
0.2
0.1
0
-80 -70 -60 -50 -40 -30 -20 -10 0 10 20 30 40 50 60 70 80 90
Angle

【Fig 6a】

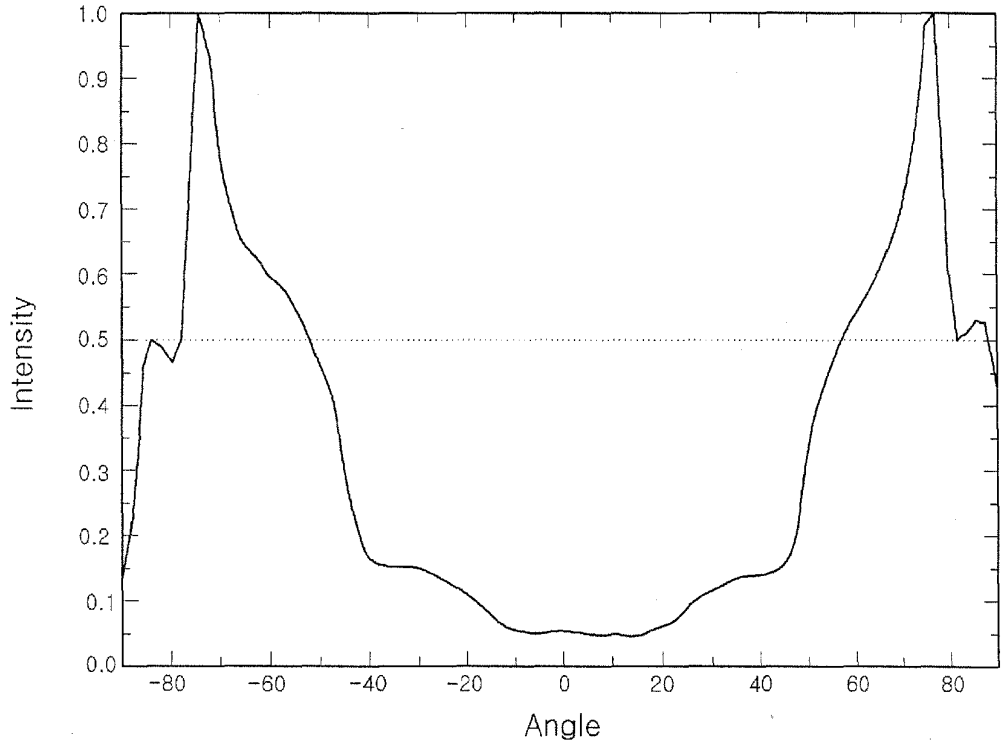
1.0
0.9
0.8
0.7
0.6
0.5
0.4
0.3
0.2
0.1
0.0
Intensity
-80
-60
-40
-20
0
20
40
60
80
Angle

【Fig 6b】

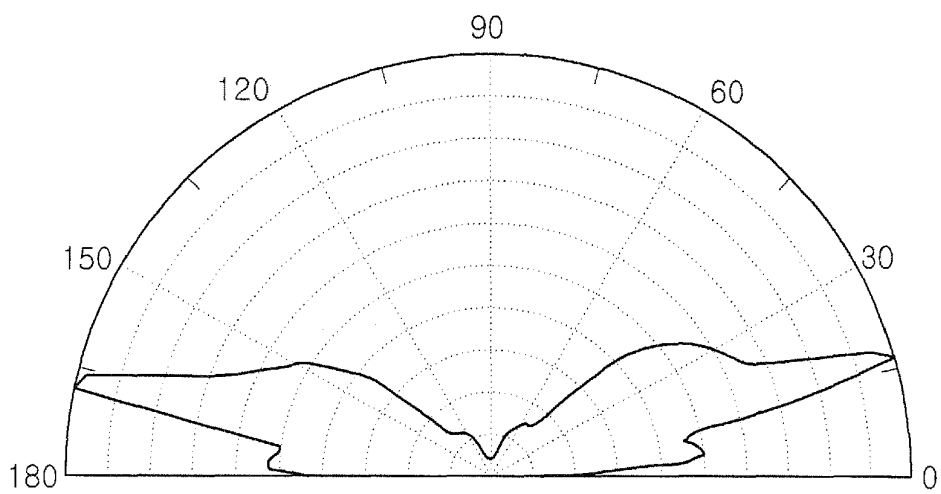
90
120
60
150
30
180
0

【Fig 7】

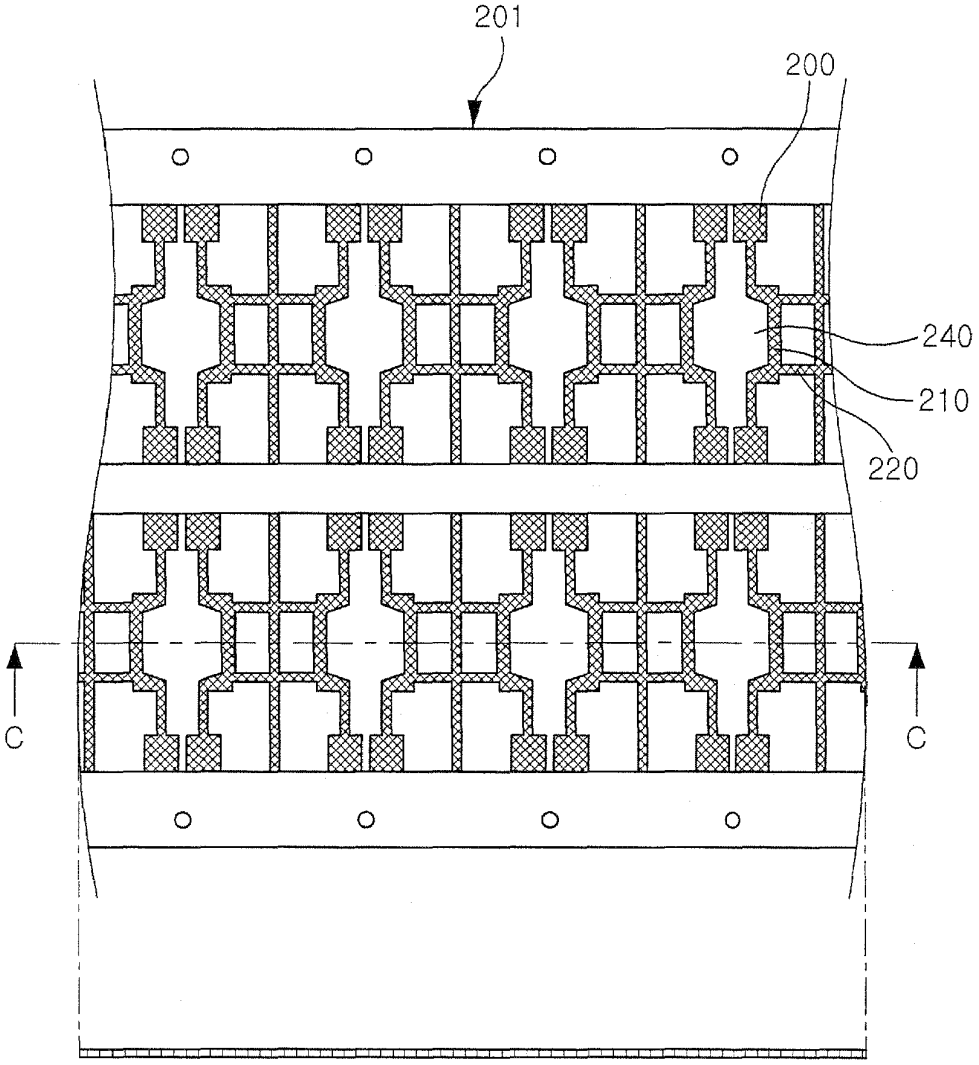

【Fig 8】

【Fig 9】

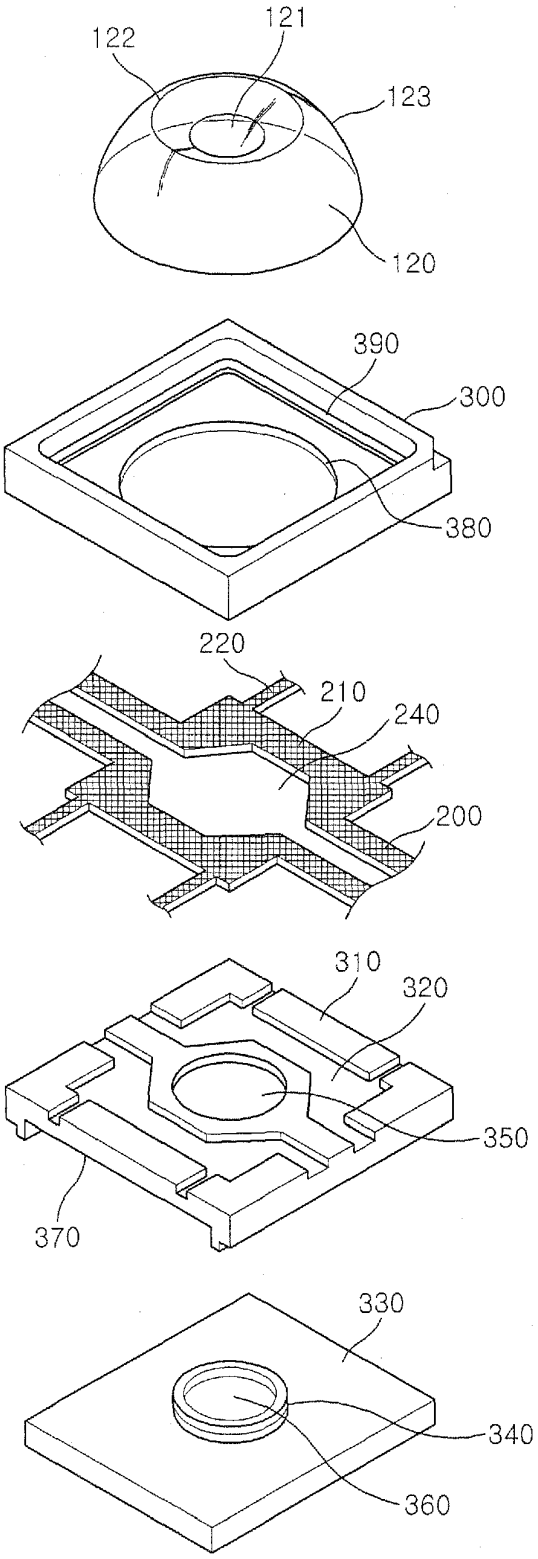
121
122
123
120
390
300
380
220
210
240
200
310
320
350
370
330
340
360

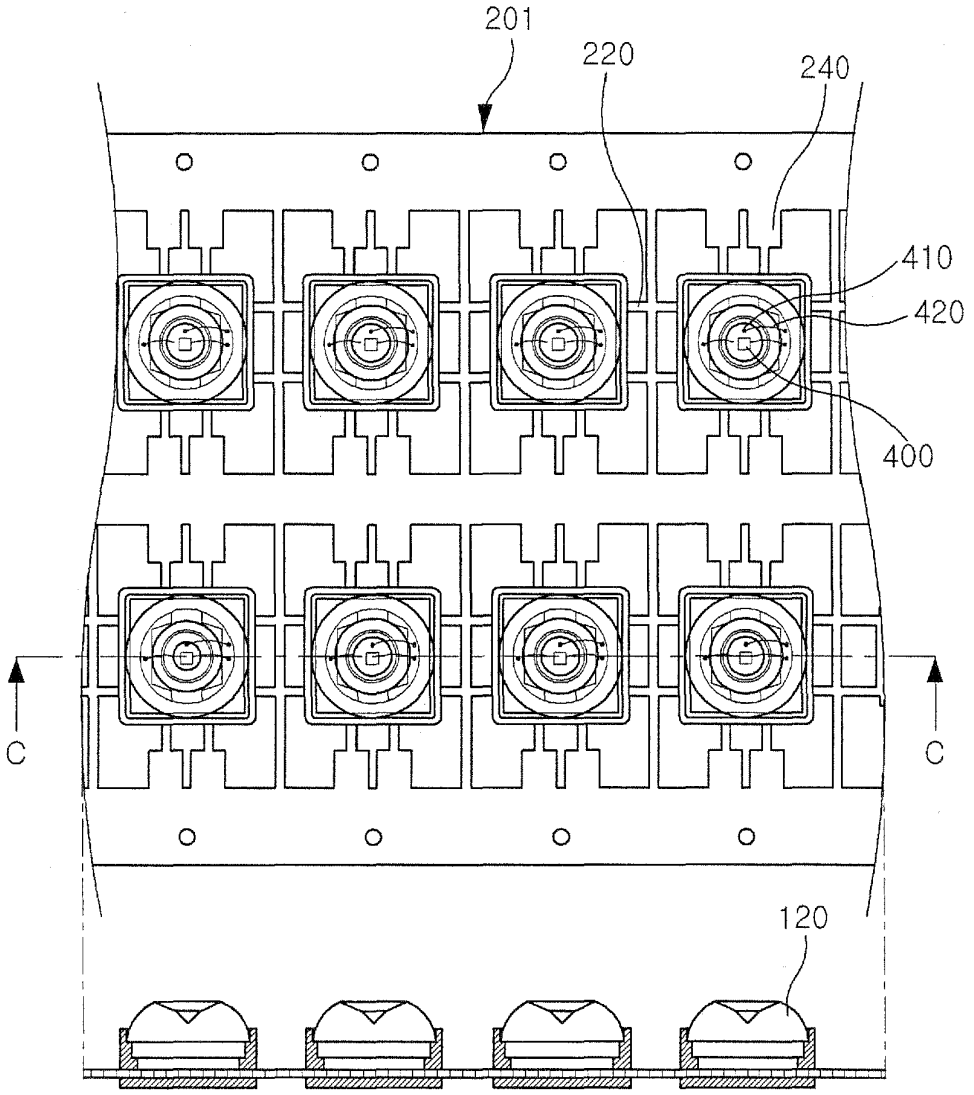

【Fig 10】

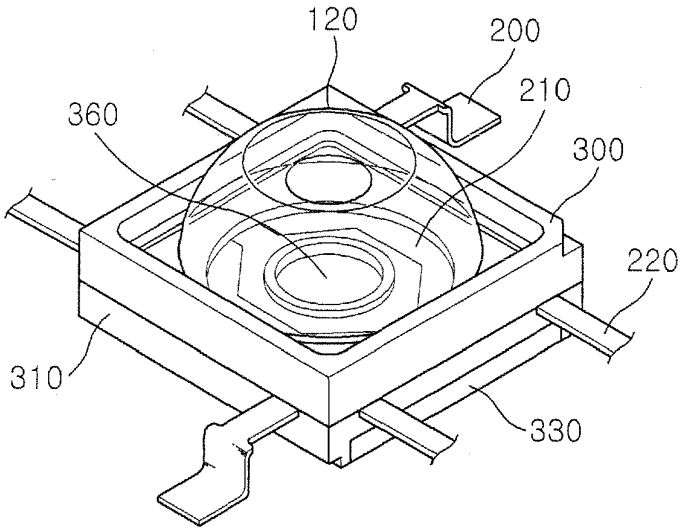

(a)

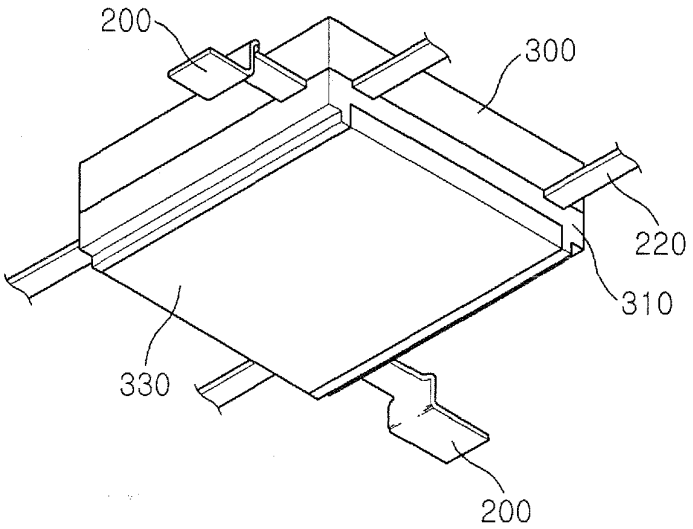

(b)

【Fig 11】

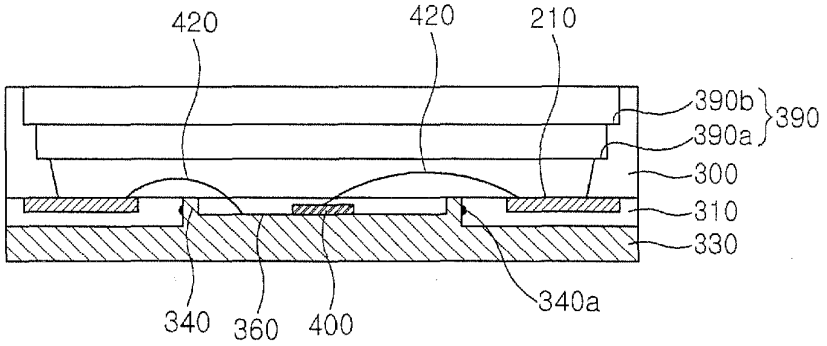
420
420
210
390b
390a
390
300
310
330
340
360
400
340a

(a)

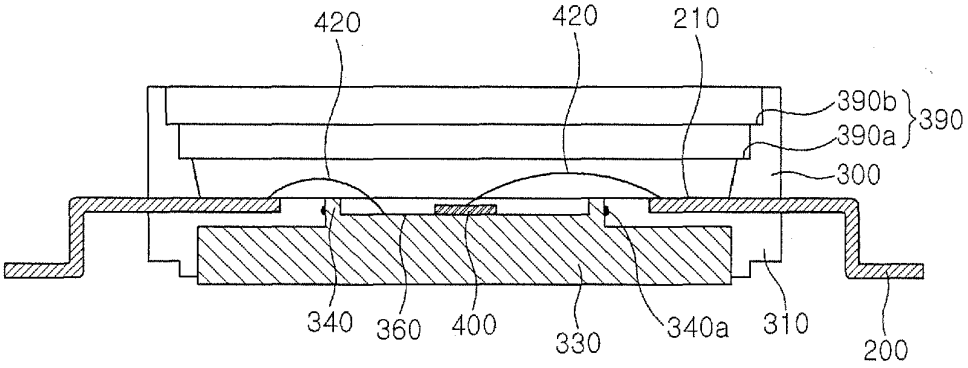
420
420
210
390b
390a
390
300
340
360
400
330
340a
310
200

(b)

【Fig 12】

【Fig 13】

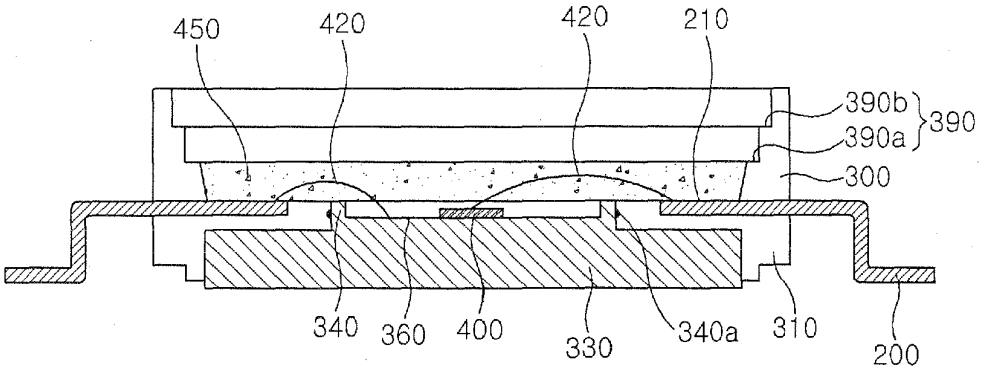
450
420
420
210
390b
390a
390
300
340
360
400
330
340a
310
200

(a)

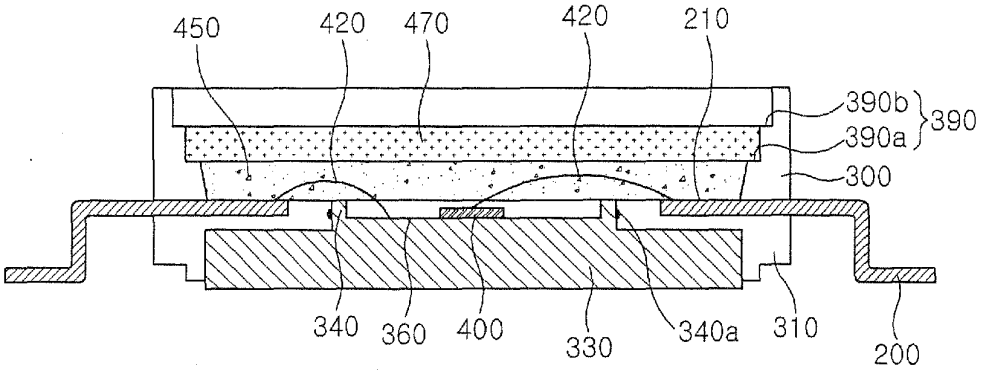
450
420
470
420
210
390b
390a
390
300
340
360
400
330
340a
310
200

(b)

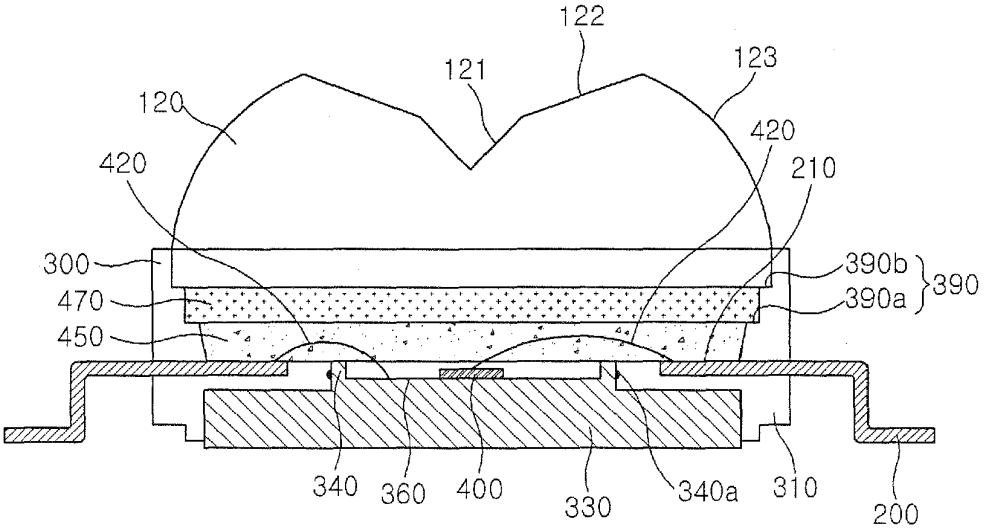
122
121
123
120
420
420
210
300
470
450
390b
390a
390
340
360
400
330
340a
310
200

(c)

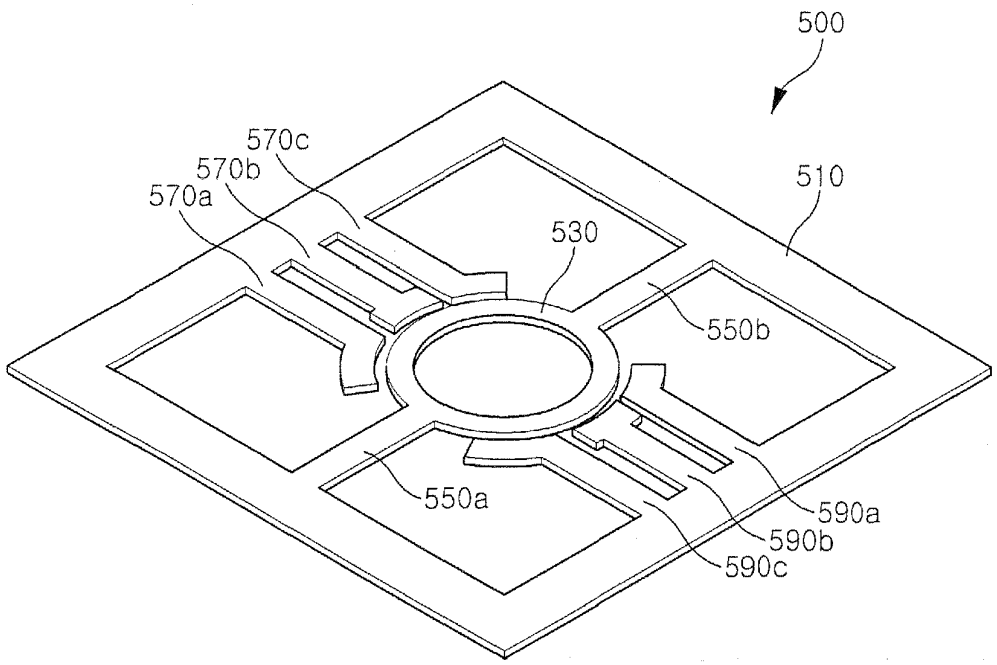

【Fig 14】

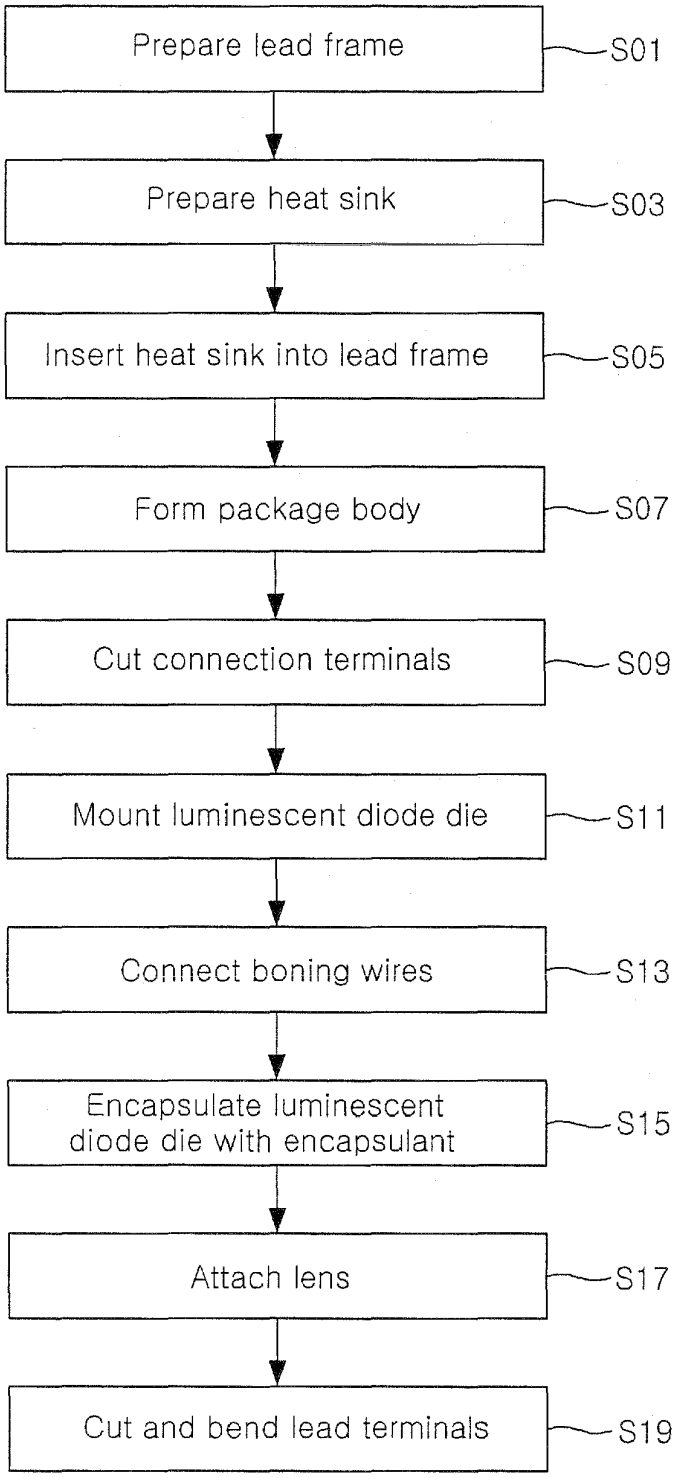
Prepare lead frame
S01
Prepare heat sink
S03
Insert heat sink into lead frame
S05
Form package body
S07
Cut connection terminals
S09
Mount luminescent diode die
S11
Connect boning wires
S13
Encapsulate luminescent diode die with encapsulant
S15
Attach lens
S17
Cut and bend lead terminals
S19

【Fig 15】

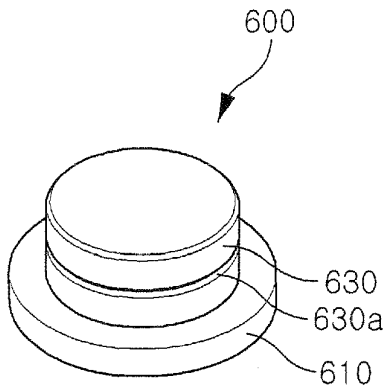

【Fig 16】

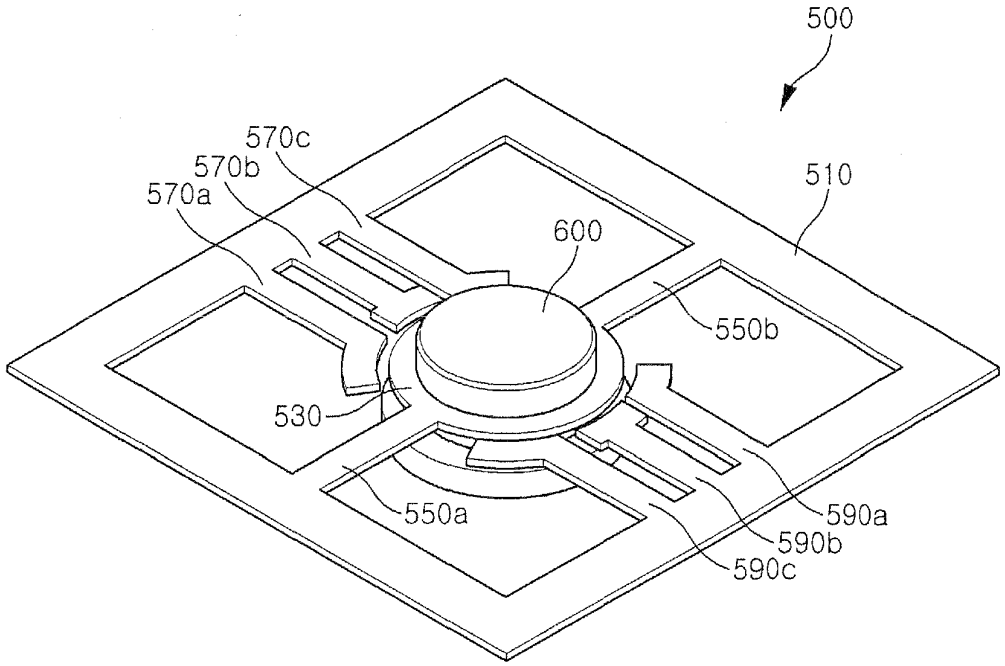

【Fig 17a】

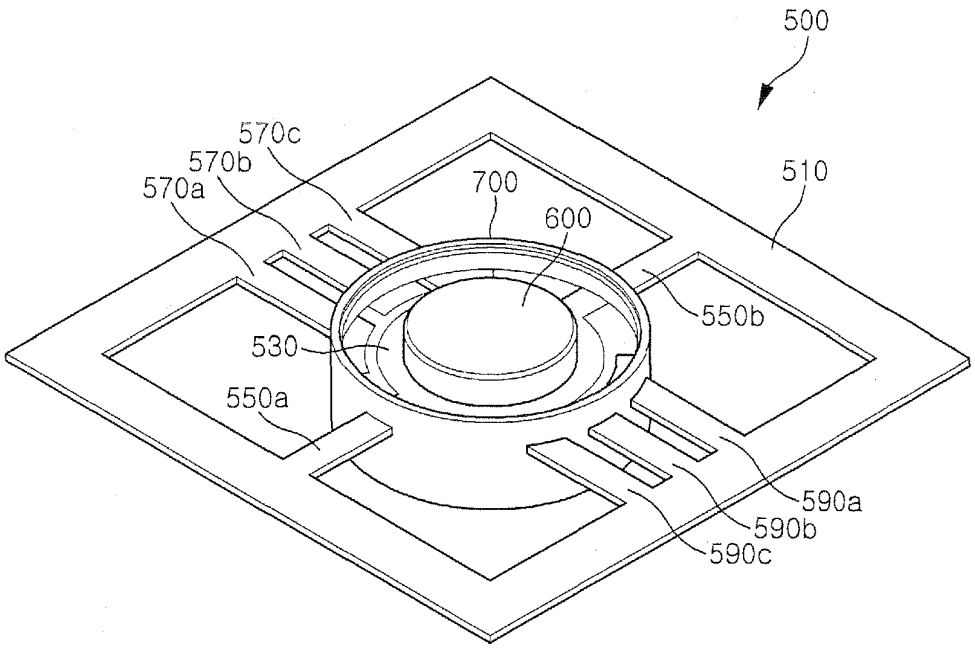
500
570c
570b
570a
700
600
510
550b
530
550a
590a
590b
590c

【Fig 17b】

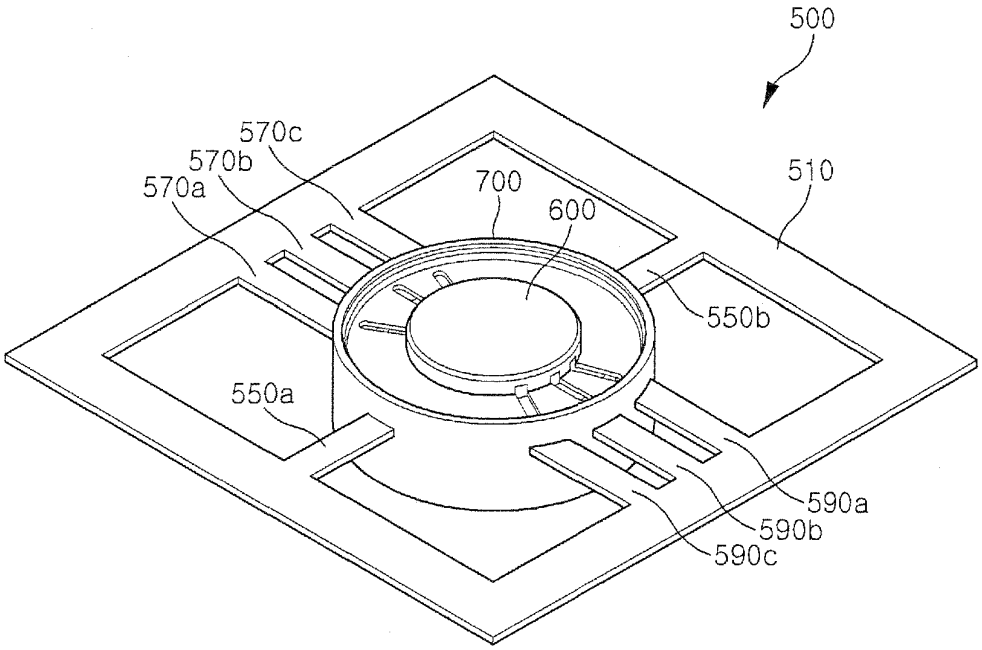
500
570c
570b
570a
700
600
510
550b
550a
590a
590b
590c

【Fig 18a】

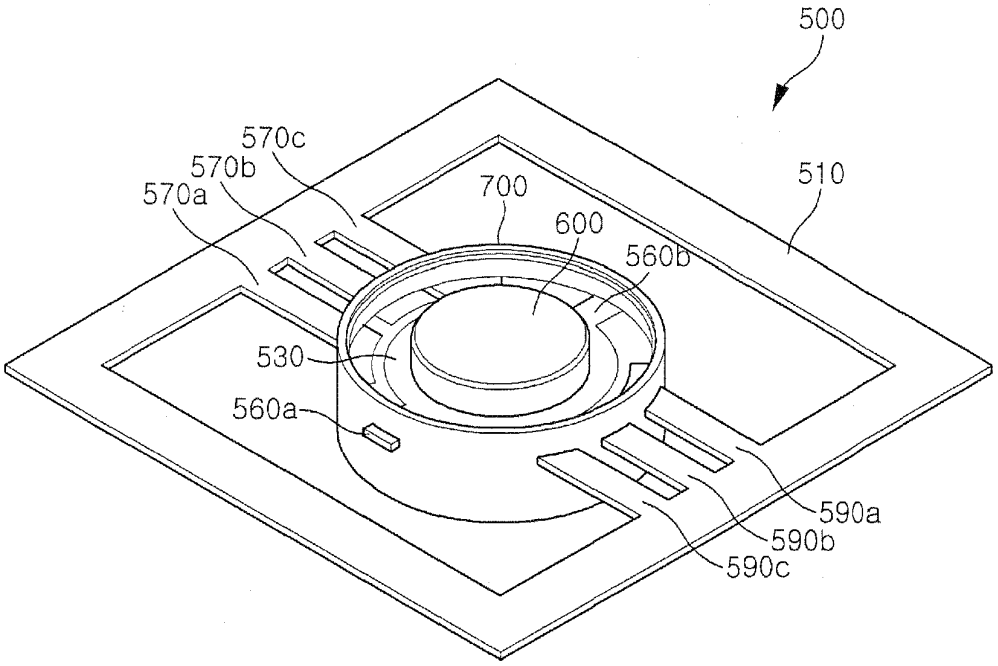

【Fig 18b】

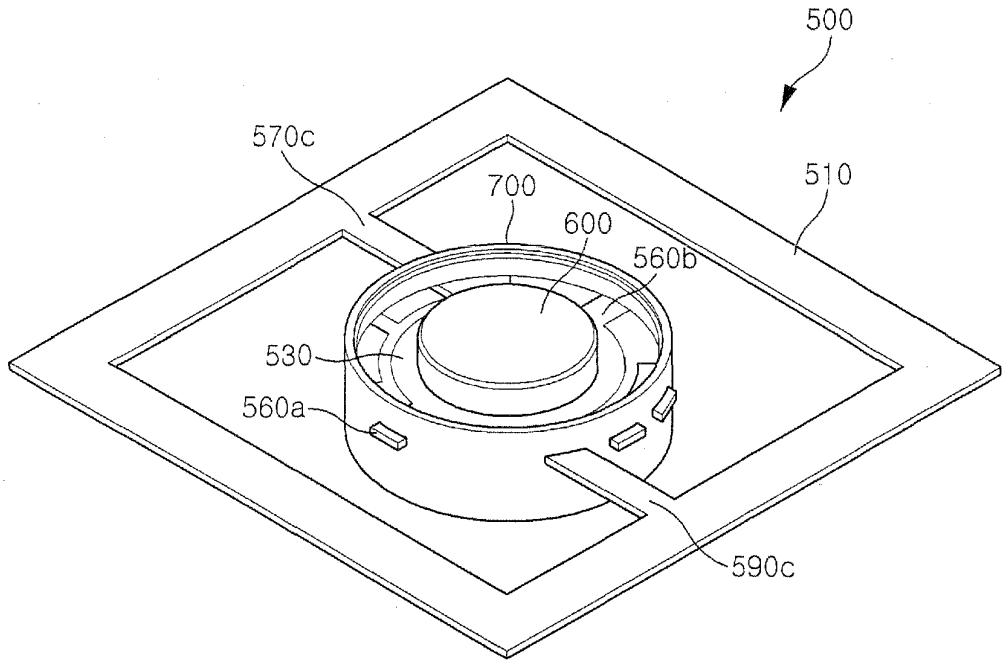
500
570c
700
600
510
560b
530
560a
590c

【Fig 18c】

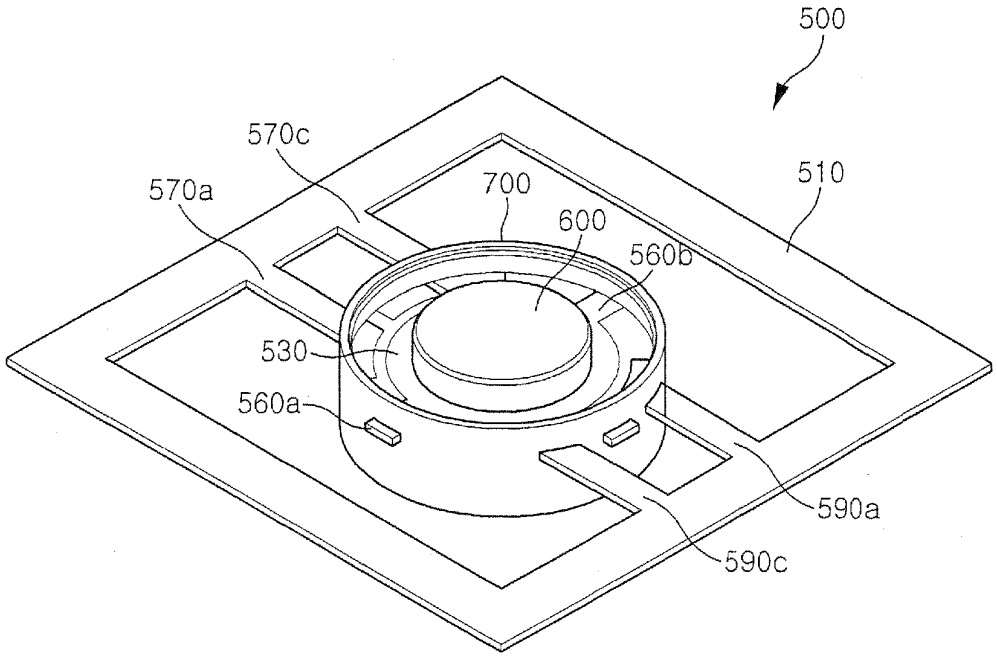
500
570c
570a
700
600
510
560b
530
560a
590a
590c

【Fig 19】

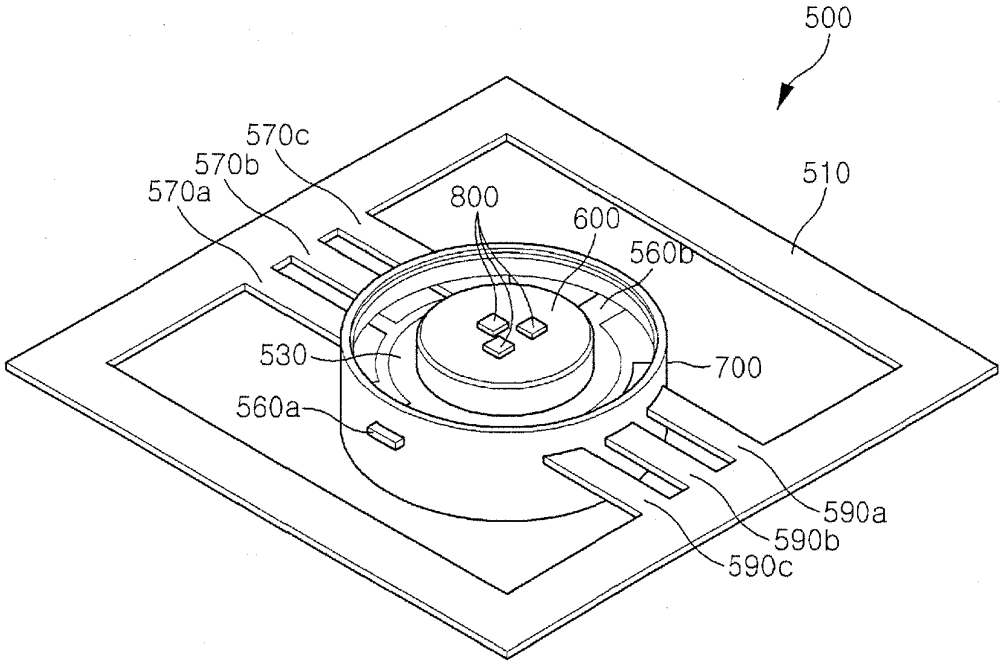

【Fig 20a】

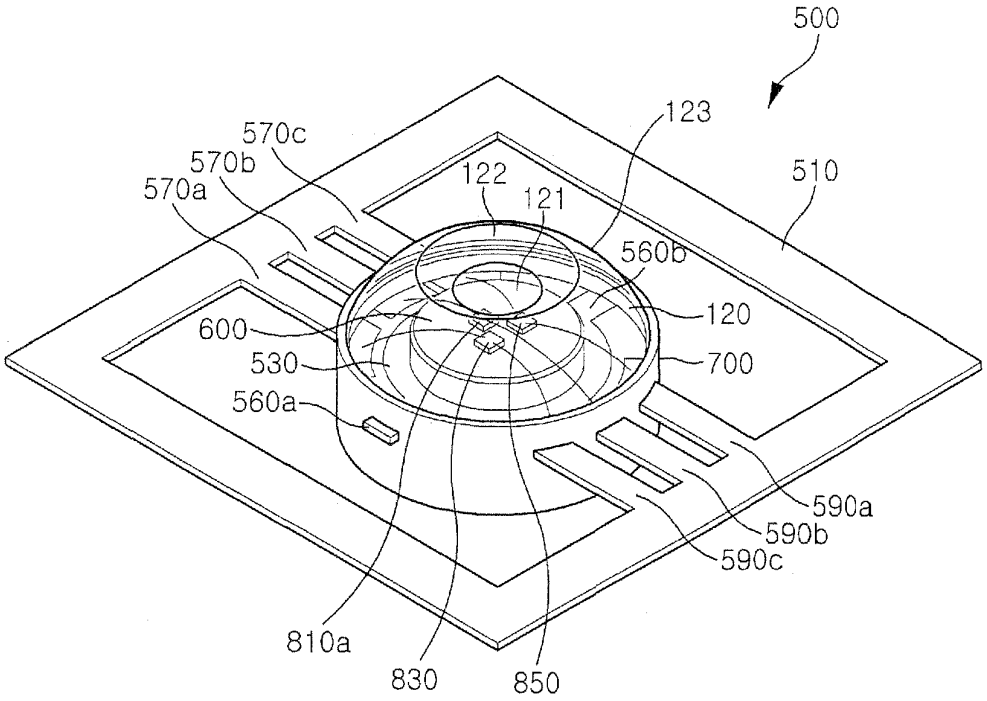
500
123
510
570c
570b
570a
122
121
560b
120
600
530
700
560a
590a
590b
590c
810a
830
850

【Fig 20b】

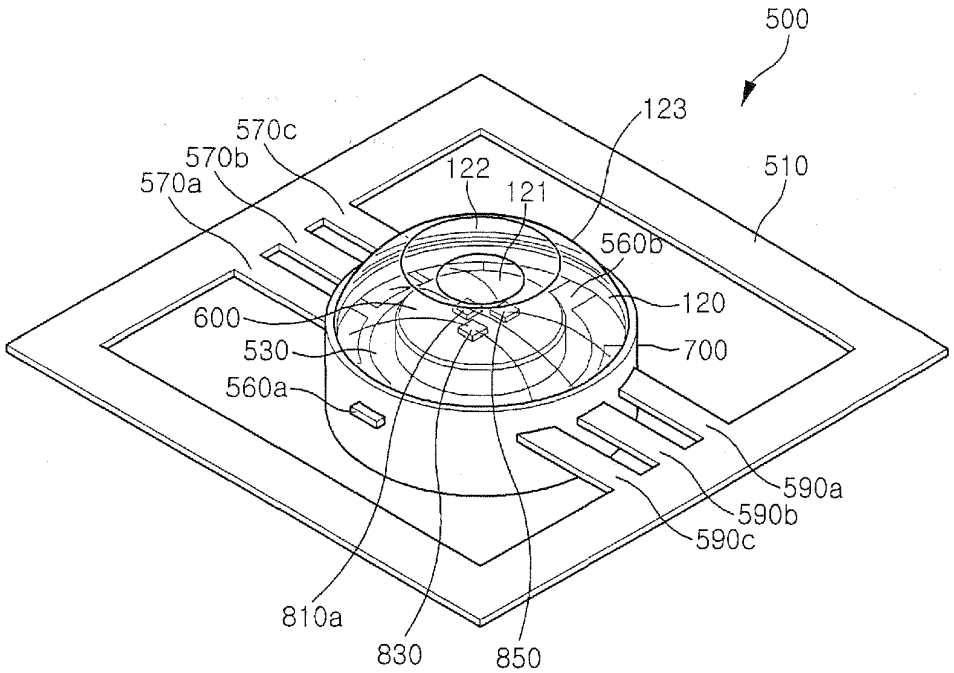
500
123
570c
570b
570a
122
121
510
560b
120
600
530
700
560a
590a
590b
590c
810a
830
850

【Fig 21】

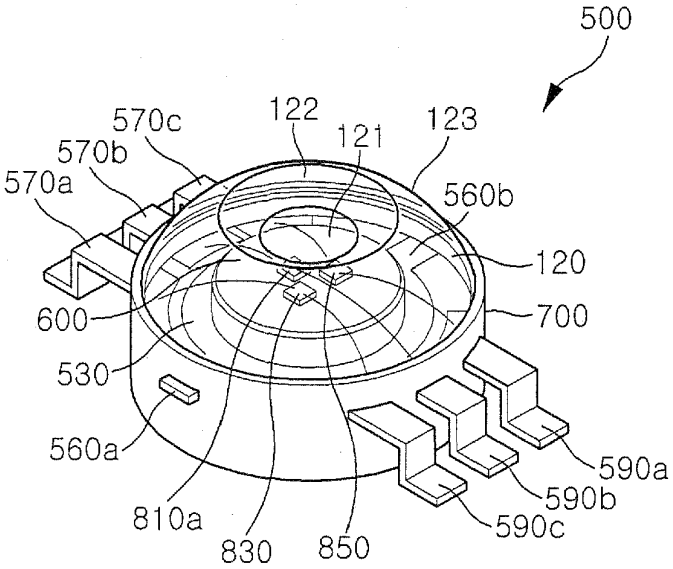
500
570c
122
123
121
570b
570a
560b
120
600
700
530
560a
590a
590b
590c
810a
830
850

【Fig 22a】

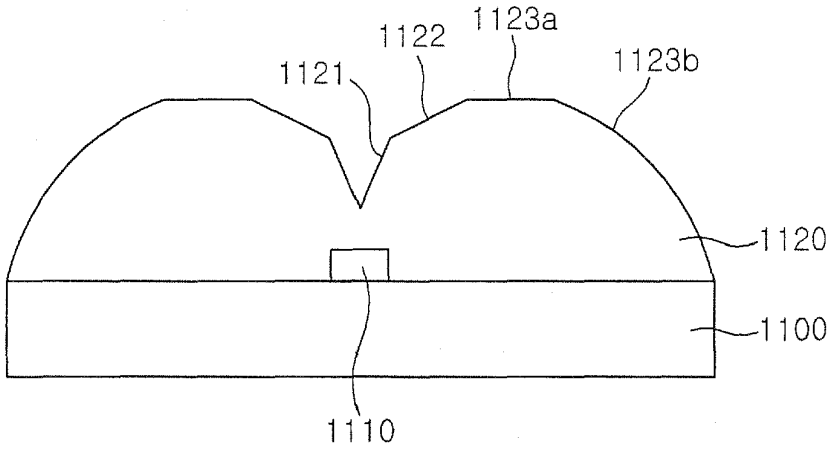

【Fig 22b】

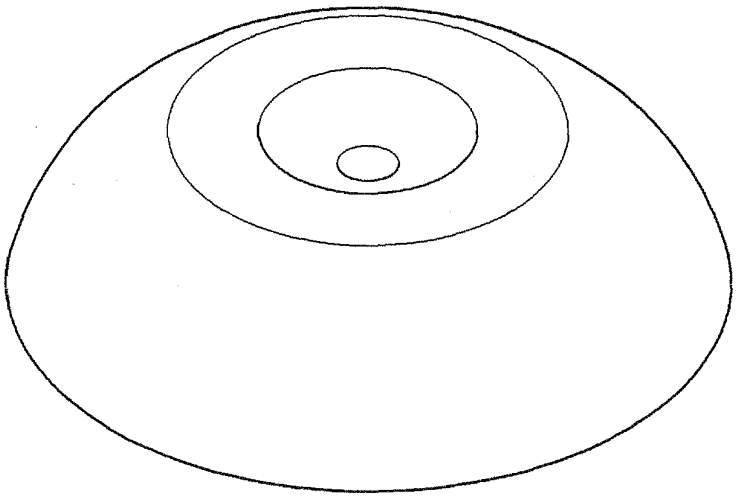

【Fig 23】

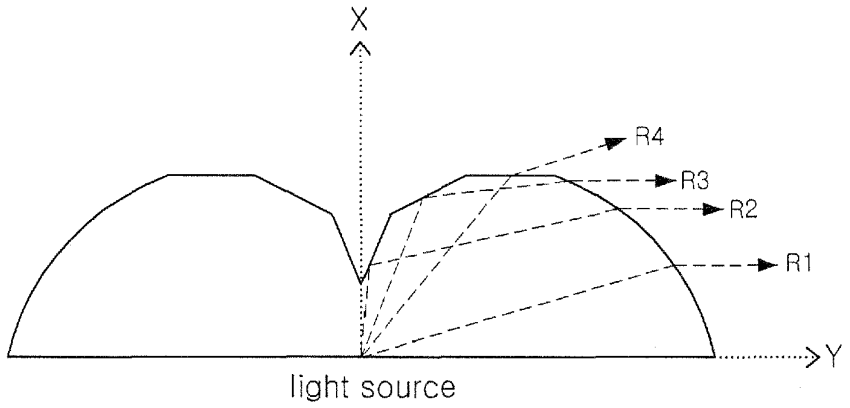

【Fig 24】

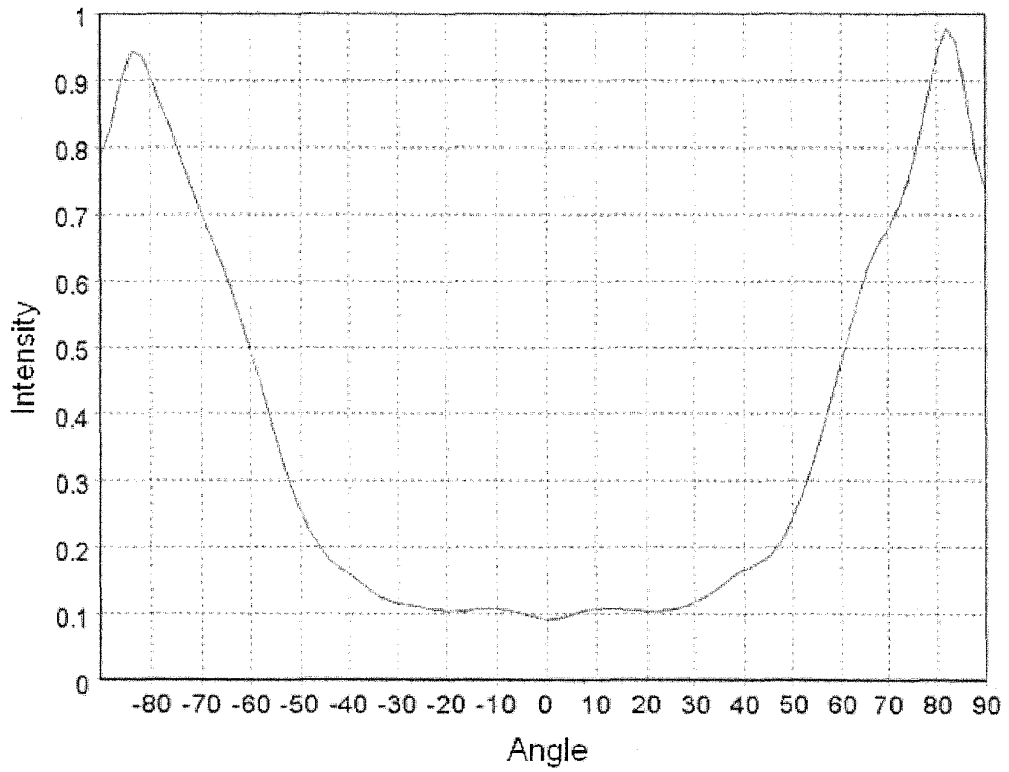

【Fig 25a】

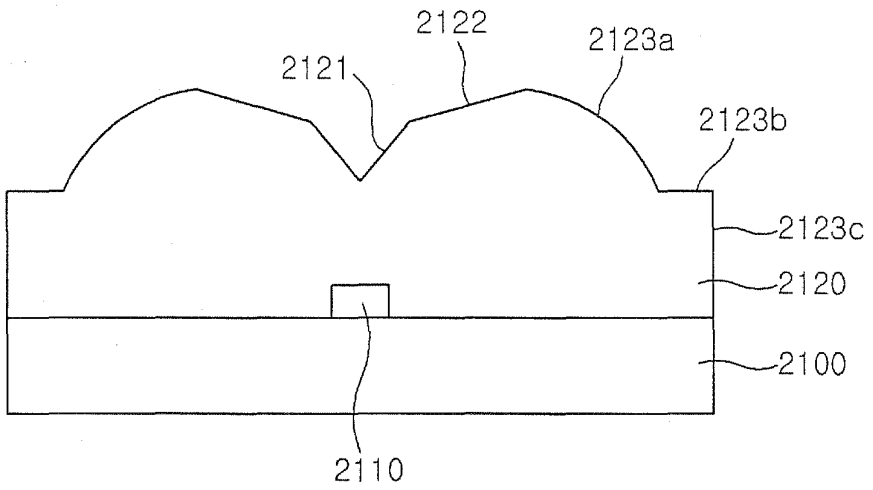

【Fig 25b】

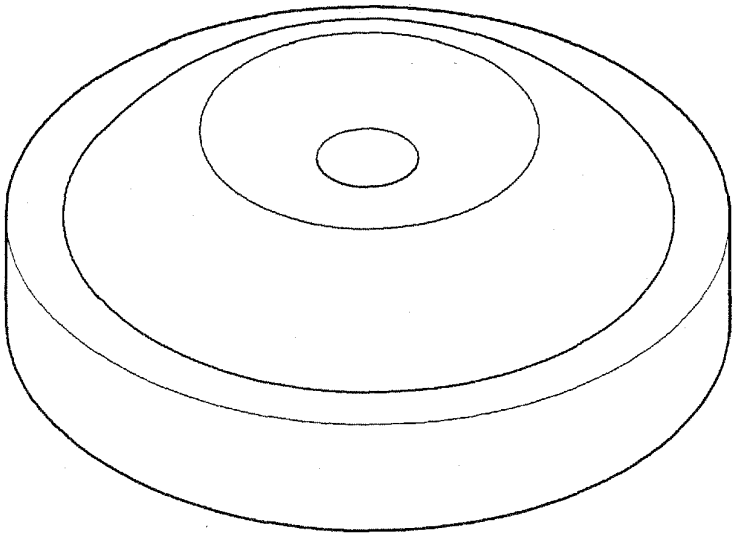

【Fig 26】

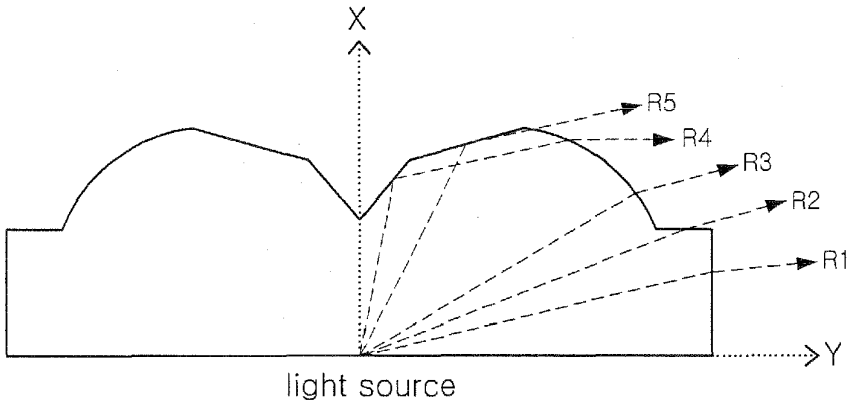

【Fig 27】

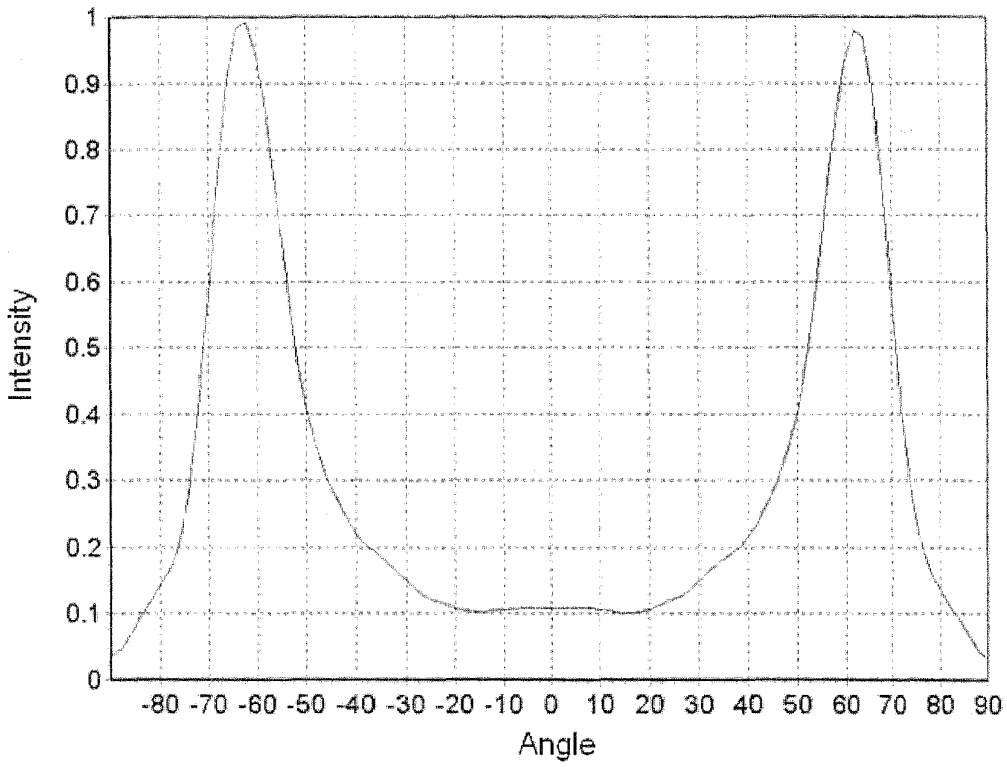

【Fig 28a】

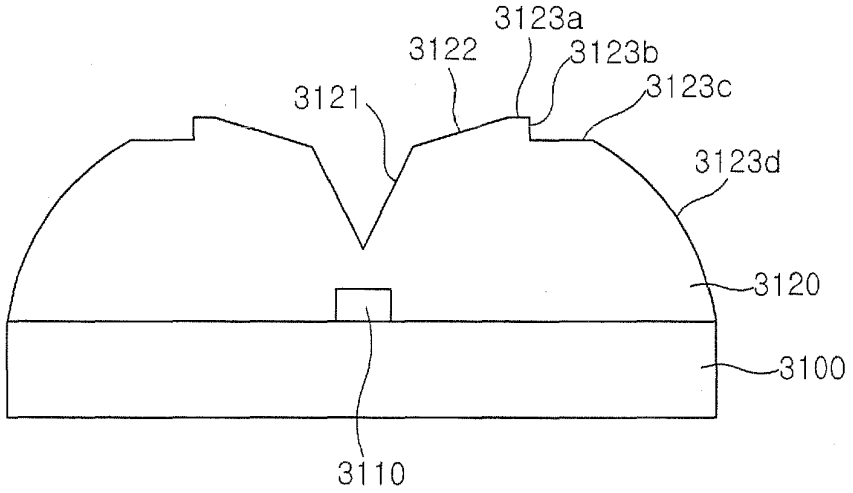

【Fig 28b】

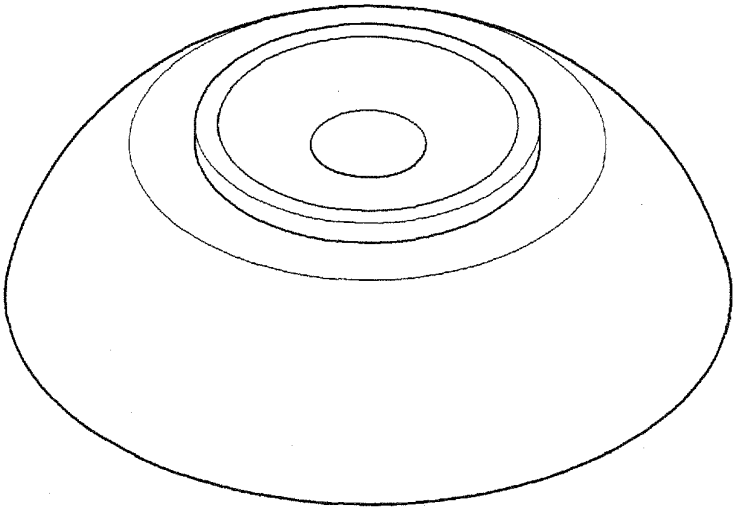

【Fig 29】

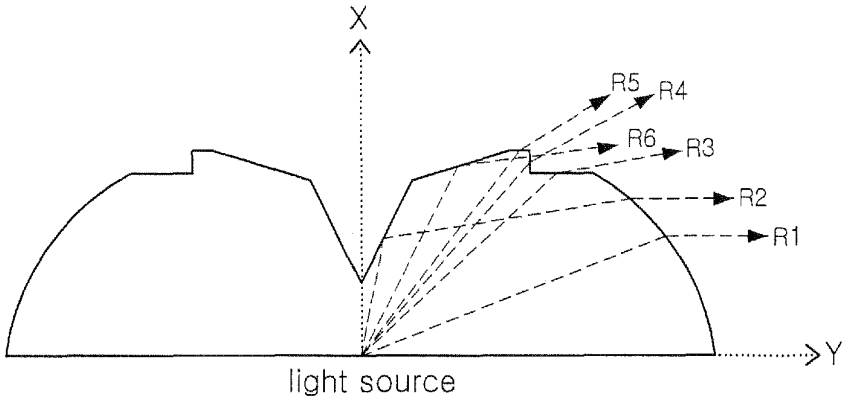

【Fig 30】

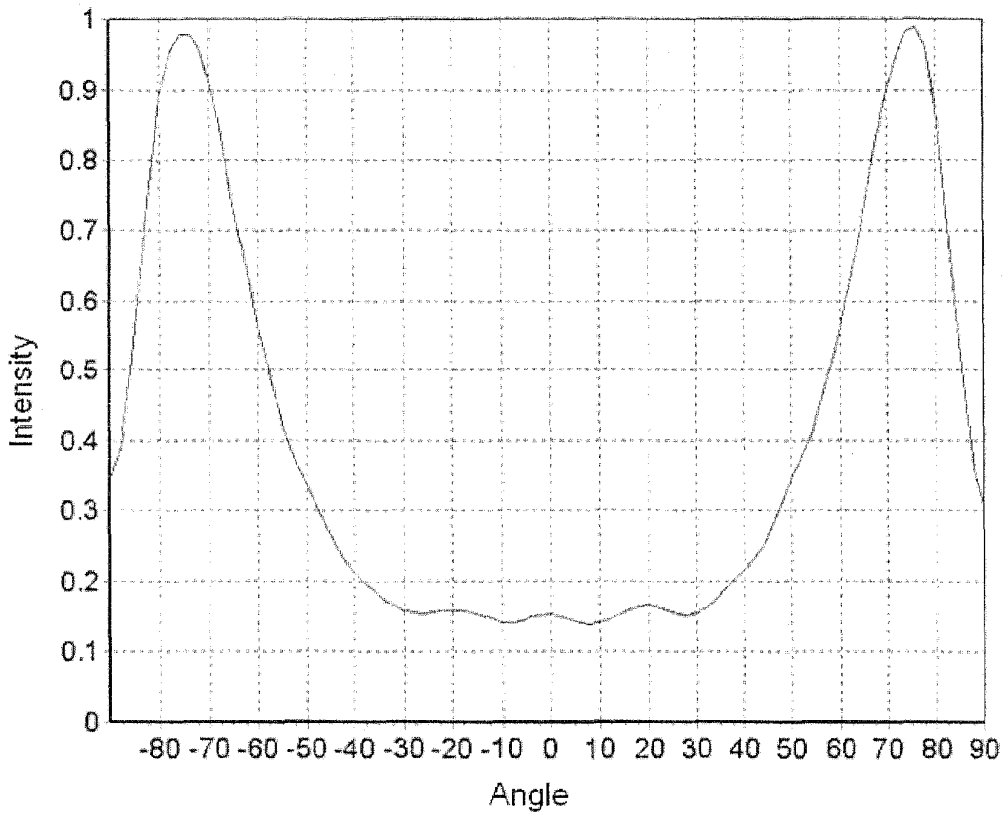

【Fig 31a】

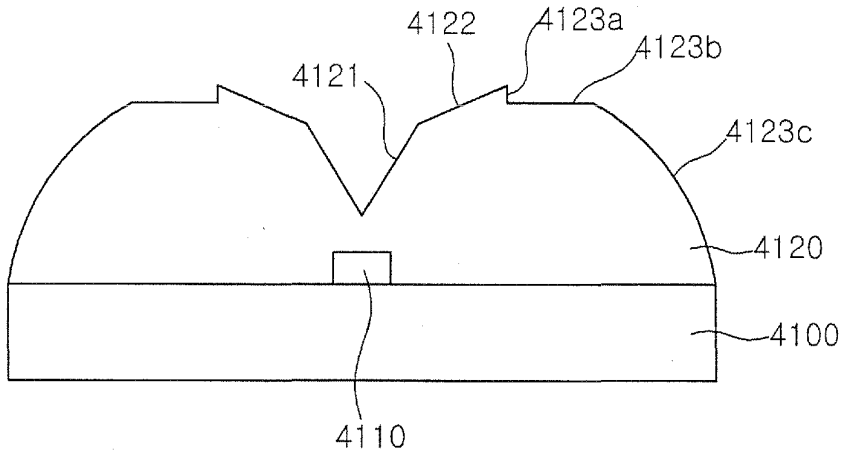

【Fig 31b】

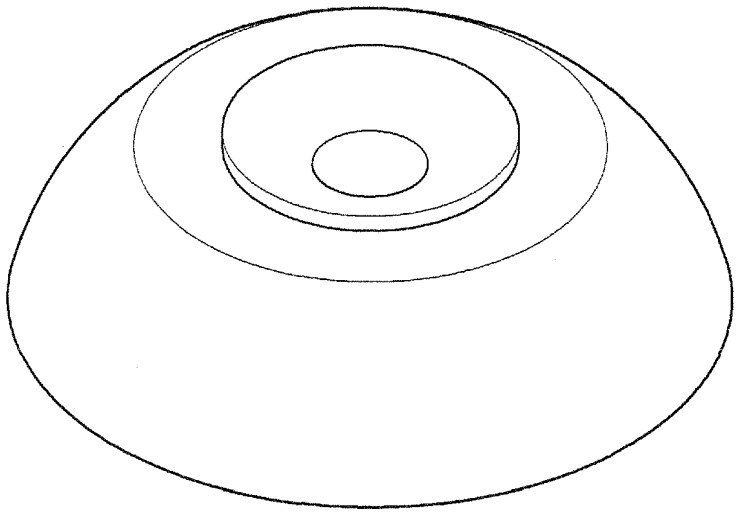

【Fig 32】

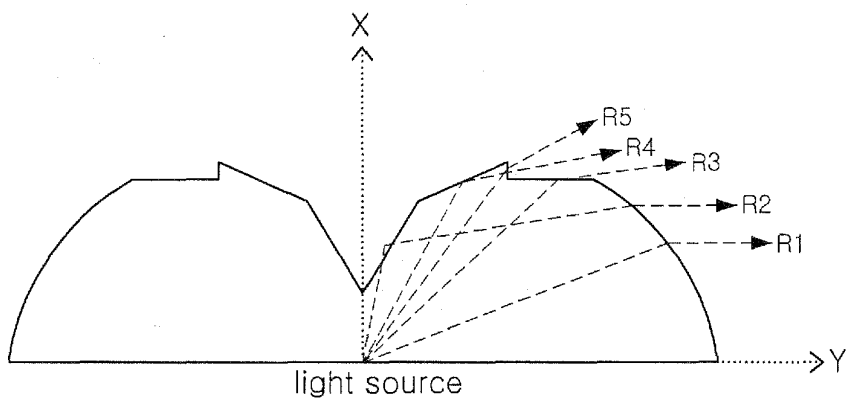
X
R5
R4
R3
R2
R1
Y
light source

【Fig 33】

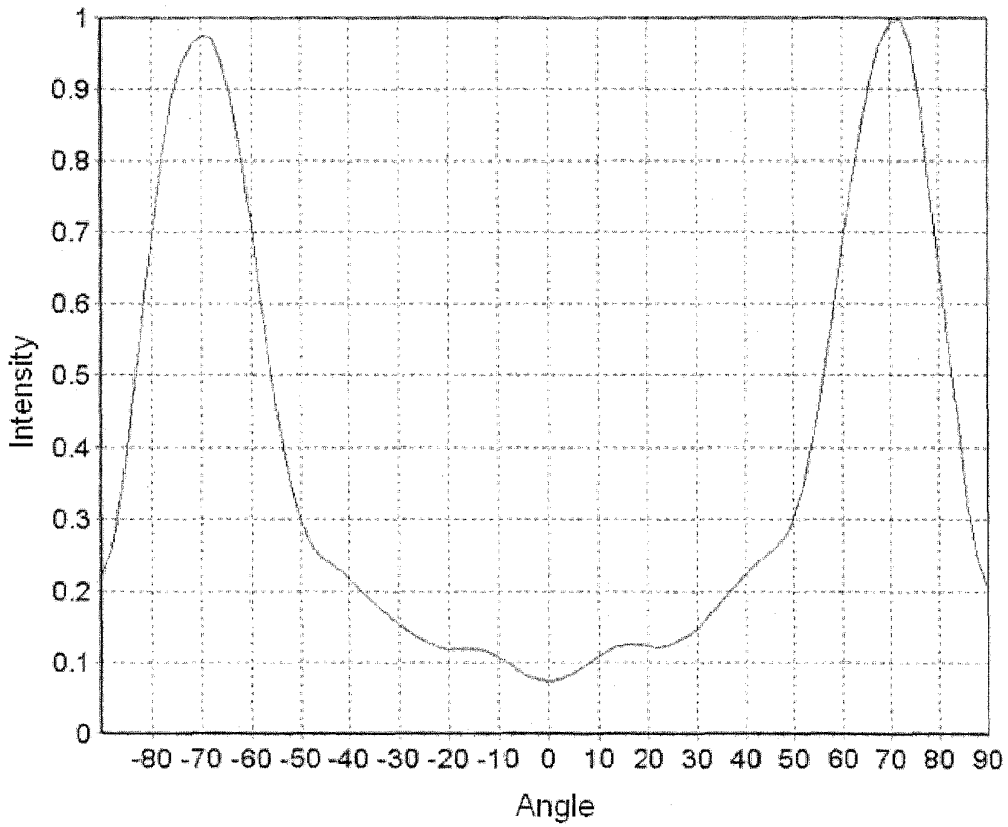
Intensity
1
0.9
0.8
0.7
0.6
0.5
0.4
0.3
0.2
0.1
0
-80 -70 -60 -50 -40 -30 -20 -10 0 10 20 30 40 50 60 70 80 90
Angle

PATENT APPLICATION
Docket No. 3576-043
Client No. PO070028

COMBINED DECLARATION AND POWER OF ATTORNEY
FILED WITH U.S. DESIGNATED OFFICE UNDER 35 U.S.C. 371(c)(4)

As a below named inventor, I hereby declare that:

My residence, post office address and citizenship are as stated below next to my name.

I believe I am the original, first and sole inventor (if only one name is listed below) or an original, first and joint inventor (if plural names are listed below) of the subject matter which is claimed and for which a patent is sought on the invention entitled **SIDE ILLUMINATION LENS AND LUMINESCENT DEVICE USING THE SAME,** described and claimed in international application number **PCT KR2005/003346,** filed **October 7, 2005,** which I have reviewed and for which I solicit a United States patent.

I hereby state that I have reviewed and understand the contents of the above-identified specification, including the claims, as amended by any amendment specifically referred to above.

I acknowledge the duty to disclose information which is material to the patentability of this application in accordance with Title 37, Code of Federal Regulations, Sec. 1.56.

I hereby claim foreign priority benefits under Title 35, United States Code, Sec. 119(a)-(d) or Sec. 365(b) of any foreign application(s) for patent or inventor's certificate or Sec. 365(a) of any PCT international application which designated at least one country other than the United States of America, listed below and have also identified below, by checking the box, any foreign application for patent or inventor's certificate, or of any PCT international application having a filing date before that of the application on which priority is claimed:

Prior Foreign Application(s)			Priority Claimed	
2004-0079909 (Number)	Republic of Korea (Country)	7 October 2004 (Day/Month/Year Filed)	☒ Yes	☐ No
2005-0000269 (Number)	Republic of Korea (Country)	03 January 2005 (Day/Month/Year Filed)	☒ Yes	☐ No
2005-0056436 (Number)	Republic of Korea (Country)	28 June 2005 (Day/Month/Year Filed)	☒ Yes	☐ No
2005-0083743 (Number)	Republic of Korea (Country)	08 September 2005 (Day/Month/Year Filed)	☒ Yes	☐ No

I hereby claim the benefit under Title 35, United States Code, Sec. 119(e) of any United States provisional application listed below:

Provisional Application No. Filing Date

_____ _____

I hereby claim the benefit under Title 35, United States Code, Sec. 120 or §365 (c) of any PCT international application designating the United States of America listed below and, insofar as the subject matter of each of the claims of this application is not disclosed in the prior United States application in the manner provided by the first paragraph of Title 35, United States Code, Sec. 112, I acknowledge the duty to disclose information which is material to patentability as defined in Title 37, Code of Federal Regulations, Sec. 1.56 which occurred between the filing date of the prior application and the national or PCT international filing date of this application:

PCT/KR2005/003346	7 October 2005	Pending
(Applic. Serial No.)	(Filing Date)	(Status) (patented, pending, abandoned)

I hereby appoint the attorneys or agents associated with **Customer No. 20575** to represent the undersigned before the United States Patent and Trademark Office (USPTO) in connection with the above application.

Direct all telephone calls to Hosoon Lee at (503) 222-3613 and send all correspondence to the following address associated with **Customer No. 20575**:

MARGER JOHNSON & McCOLLOM, P.C.
210 S.W. Morrison Street, Suite 400
Portland, Oregon 97204

I hereby declare that all statements made herein of my own knowledge are true and that all statements made on information and belief are believed to be true; and further that these statements were made with the knowledge that willful false statements and the like so made are punishable by fine or imprisonment, or both, under Section 1001 of Title 18 of the United States Code and that such willful false statements may jeopardize the validity of the application or any patent issued thereon.

Full name of sole or first inventor: Do-Hyung KIM

Inventor's signature: Do-Hyung Kim 07.4.6
(Date)

Residence: Suwon, 440-720 Republic of Korea

Citizenship: Republic of Korea

Post Office address: 425-1604 Yeonggot Maeul Apt., Jeongja 3-Dong Jangan-Gu, Suwon, 440-720 Republic of Korea

Full name of sole or second inventor: Chung-Hooon LEE

Inventor's signature: Chung-Hoon Lee 07. 4. 6
(Date)

Residence: Gyeonggi-do, 423-821, Republic of Korea

Citizenship: Republic of Korea

Post Office address: 28-2, Soha-Dong, Gwangmyeong-Si, Gyeonggi-Do, 423-821
Republic of Korea

Full name of sole or third inventor: Keon-Young LEE

Inventor's signature: Keon-Young Lee 07. 4. 6
(Date)

Residence: Ansan, 425-803 Republic of Korea

Citizenship: Republic of Korea

Post Office address: Jung-won villa 3-101, Gojan 1-dong Danwon-Gu, Ansan 425-803
Republic of Korea

Full name of sole or fourth inventor: Kwang-Il PARK

Inventor's signature: 07. 4. 6.
(Date)

Residence: Seoul, 151-840 Republic of Korea

Citizenship: Republic of Korea

Post Office address: 2-302 Seonwoo village, 909-19, Bongcheonbon-dong, Gwanak-Gu,
Seoul 151-840 Republic of Korea

(12) INTERNATIONAL APPLICATION PUBLISHED UNDER THE PATENT COOPERATION TREATY (PCT)

(19) World Intellectual Property Organization
International Bureau

(43) International Publication Date
3 August 2006 (03.08.2006)

PCT

(10) International Publication Number
WO 2006/080729 A1

(51) International Patent Classification:
H01L 33/00 (2006.01)

(21) International Application Number:
PCT/KR2005/003346

(22) International Filing Date: 7 October 2005 (07.10.2005)

(25) Filing Language: Korean

(26) Publication Language: English

(30) Priority Data:

10-2004-0079909	7 October 2004 (07.10.2004)	KR
10-2005-0000269	3 January 2005 (03.01.2005)	KR
10-2005-0056436	28 June 2005 (28.06.2005)	KR
10-2005-0083743	8 September 2005 (08.09.2005)	KR

(71) Applicant *(for all designated States except US)*: **SEOUL SEMICONDUCTOR CO., LTD.** [KR/KR]; 148-29, Gasan-Dong, Geumcheon-gu, Seoul 153 - 023 (KR).

(72) Inventors; and
(75) Inventors/Applicants *(for US only)*: **KIM, Do Hyung** [KR/KR]; 425-1604 Yeonggot Maeul Apt., Jeongja 3-dong, Jangan-gu, Suwon 440 - 720 (KR). **LEE, Chung Hoon** [KR/KR]; 305-701 Olympic Apt., Bangi-dong, Songpa-gu, Seoul 138 - 050 (KR). **LEE, Keon Young** [KR/KR]; Jungwon villa 3-101, Gojan 1-dong, Danwon-Gu, Ansan 425 - 803 (KR). **PARK, Kwang Il** [KR/KR]; 2-302 Seonwoo village, 909-19, Bongcheonbon-dong, Gwanak-Gu, Seoul 151 - 840 (KR).

(74) Agent: **NAM, Seung-Hee**; 12F, Seo-Jeon Bldg., 1330-9, Seocho-dong, Seocho-Gu, Seoul 135 - 080 (KR).

(81) Designated States *(unless otherwise indicated, for every kind of national protection available)*: AE, AG, AL, AM, AT, AU, AZ, BA, BB, BG, BR, BW, BY, BZ, CA, CH, CN, CO, CR, CU, CZ, DE, DK, DM, DZ, EC, EE, EG, ES, FI, GB, GD, GE, GH, GM, HR, HU, ID, IL, IN, IS, JP, KE, KG, KM, KP, KZ, LC, LK, LR, LS, LT, LU, LV, LY, MA, MD, MG, MK, MN, MW, MX, MZ, NA, NG, NI, NO, NZ, OM, PG, PH, PL, PT, RO, RU, SC, SD, SE, SG, SK, SL, SM, SY, TJ, TM, TN, TR, TT, TZ, UA, UG, US, UZ, VC, VN, YU, ZA, ZM, ZW.

(84) Designated States *(unless otherwise indicated, for every kind of regional protection available)*: ARIPO (BW, GH, GM, KE, LS, MW, MZ, NA, SD, SL, SZ, TZ, UG, ZM, ZW), Eurasian (AM, AZ, BY, KG, KZ, MD, RU, TJ, TM), European (AT, BE, BG, CH, CY, CZ, DE, DK, EE, ES, FI, FR, GB, GR, HU, IE, IS, IT, LT, LU, LV, MC, NL, PL, PT, RO, SE, SI, SK, TR), OAPI (BF, BJ, CF, CG, CI, CM, GA, GN, GQ, GW, ML, MR, NE, SN, TD, TG).

Published:
— *with international search report*

For two-letter codes and other abbreviations, refer to the "Guidance Notes on Codes and Abbreviations" appearing at the beginning of each regular issue of the PCT Gazette.

(54) Title: SIDE ILLUMINATION LENS AND LUMINESCENT DEVICE USING THE SAME

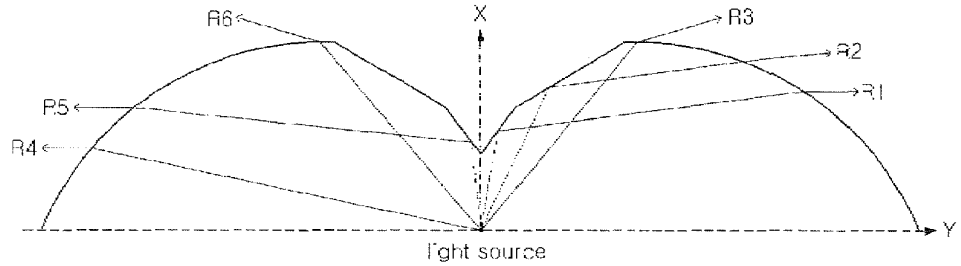

(57) Abstract: The present invention relates to a side illumination lens and a luminescent device using the same, and provides a body, a total reflection surface with a total reflection slope with respect to a central axis of the body, and a linear and/or curved refractive surface(s) formed to extend from a periphery of the total reflection surface; and a luminescent device including the lens. According to the present invention, a lens with total internal reflection surfaces with different slopes, and a linear and/or curved refractive surface(s) allows light emitted forward from a luminescent chip to be guided to a side of the lens. Further, a linear surface(s) formed in a direction perpendicular or parallel to a central axis of a lens and a curved surface are formed on an edge of the lens so that a process of fabricating the lens is facilitated, thereby reducing a defective rate and fabrication costs of the lens.

WO 2006/080729 A1

Description

SIDE ILLUMINATION LENS AND LUMINESCENT DEVICE USING THE SAME

Technical Field

[1] The present invention relates to a side illumination lens and a luminescent device using the same, and more particularly, to a side illumination lens utilizing total internal reflection and a luminescent device using the lens.

Background Art

[2] In general, a light emitting diode (LED) is a device utilizing a phenomenon in which minority carriers (electrons or holes) injected by means of a p-n junction structure of a semiconductor are produced, and light is emitted due to recombination of the carriers. Conventionally, colors of light emitted by a light emitting diode are only red and green, and thus, the conventional light emitting diode has its use limited to a display device.

[3] With the development of technology, however, light emission is allowed in various ranges of wavelength, in addition to blue light emission. Thus, a light emitting diode has begun to be used in a variety of fields. In particular, as white light emission is realized, the use of the light emitting diode is expanded to an illumination device as well as a backlight for a liquid crystal display.

[4] However, since the direction of light emitted by a light emitting diode is random, the light should be induced in a desired direction to be used as an illumination device and a backlight. To induce light in the prior art, as shown in Fig. 1a, a luminescent chip 11 is mounted on a substrate 10, molding is performed to form a convex lens 12 over the luminescent chip 11, and a pattern 13 for diffused reflection is formed on the surface of the convex lens 12 so that light can be spread widely. As shown in Fig. 1b, reflection cups 14 are formed at both sides of the luminescent chip 11 to enhance focusing of light. Since the aforementioned luminescent device mainly emits light forward rather than sideward, there is a problem in that it is difficult to apply the luminescent device to a backlight which should widely emit light sideward.

[5] Accordingly, studies on development of a device capable of emitting light in side directions of a lens have been actively conducted using the total internal reflection (TIR) property of light. Conventional lenses using TIR are disclosed in U.S. Patent Nos. 6,679,621, 6,607,286 and 6,598,998. In the patents, a lens comprises a total reflection surface which is formed on the lens and has a predetermined slope, and a plurality of refractive surfaces which have different slopes and through which light reflected by the total reflection surface is emitted to the outside. Since the conventional

lens has the plurality of refractive surfaces formed on right and left sides of the total reflection surface, there is a problem in that a process of fabricating the lens is complicated and fabricating costs increase. That is, there are the following problems: if a lens is fabricated using a mold, upper and lower mold parts and right and left mold parts are required; and if a lens is fabricated by means of a casting or grinding method, it cannot be easily fabricated in view of its shape.

Disclosure of Invention

Technical Problem

[6] Accordingly, the present invention is conceived to solve the aforementioned problems. An object of the present invention is to provide a side illumination lens, which comprises a total internal reflection surface with a total reflection slope and a linear and/or curved refractive surface(s) extending therefrom, thereby achieving side luminescence, facilitating a fabricating process thereof and reducing fabricating costs, and a luminescent device using the side illumination lens.

Technical Solution

[7] The present invention provides a lens comprising a body, a total reflection surface with a total reflection slope with respect to a central axis of the body, and a linear and/ or curved refractive surface(s) formed to extend from a periphery of the total reflection surface.

[8] Here, the refractive surface may comprise a linear refractive surface formed by being bent at the periphery of the total reflection surface, and a curved refractive surface formed to extend from a periphery of the linear refractive surface. Alternatively, the refractive surface may comprise a curved refractive surface formed to extend from the periphery of the total reflection surface, and a linear refractive surface formed by being bent at a periphery of the curved refractive surface.

[9] Preferably, the curved refractive surface takes the shape of an ellipse, and a ratio of minor and major axes of the ellipse is 1:4 or less. The linear refractive surface may be bent more than once.

[10] The total reflection surface may comprise a first total reflection surface having a section in the form of a V-shaped recess with a predetermined slope, and a second total reflection surface extending upward from a periphery of the first total reflection surface and formed to be sloped with a gradient smaller than that of the first total reflection surface.

[11] The refractive index of the body may be 1.2 to 2.0.

[12] The present invention provides a luminescent device comprising a package housing with an opening and a through-hole exposed by the opening; a lead terminal having an inner portion exposed within the opening of the package housing and an outer portion

extending from the inner portion and protruding to the outside of the package housing; a heat sink coupled to a lower portion of the package housing and having a portion exposed through the opening; and a lens including a total reflection surface encapsulating the package housing and having a total reflection slope, and a refractive surface formed to extend from a periphery of the total reflection surface.

[13] Here, the package housing may comprise first and second housings mutually coupled to each other with the lead terminal interposed therebetween, and the opening may be formed in the first housing.

[14] The heat sink may comprise a heat sink body corresponding to a bottom surface of the package housing, and an insertion projection protruding upward from a central portion of the heat sink body and inserted into the through-hole of the package housing. At this time, the heat sink may have a coupling projection on at least one side of the heat sink body and the insertion projection.

[15] The present invention provides a luminescent device comprising a heat sink support ring; a heat sink inserted into the support ring; at least two lead terminals arranged at both sides of the support ring while being spaced apart from the support ring and the heat sink; a package body that molds and supports the heat sink and the lead terminals, and has an opening through which an upper portion of the heat sink and portions of the lead terminals are exposed; and a lens including a total reflection surface encapsulating the package body and having a total reflection slope, and a refractive surface formed to extend from a periphery edge of the total reflection surface.

[16] Here, the heat sink may have a base and a projection protruding upward from the base at the center thereof, and the projection is inserted into the support ring.

[17] The heat sink may further comprise a support ring-receiving groove in a side surface of the projection so that the support ring-receiving groove can be fastened to the support ring. The package body may be a plastic resin body formed by insert-molding a thermosetting or thermoplastic resin after the heat sink is inserted into the support ring.

Advantageous Effects

[18] As described above, according to the present invention, a lens with total internal reflection surfaces with different slopes, and a linear and/or curved refractive surface(s) allows light emitted forward from a luminescent chip to be guided to a side of the lens.

[19] Further, a linear surface(s) formed in a direction perpendicular or parallel to a central axis of a lens and a curved surface are formed on an edge of the lens so that a process of fabricating the lens is facilitated, thereby reducing a defective rate and

fabrication costs of the lens.

[20] Moreover, it is possible to provide a luminescent device employing a heat sink to exhibit superior heat dissipation property, thereby obtaining high output of light.

[21] Furthermore, after a heat sink is fixed to a frame, a package body can be formed using an insert molding technique, so that a luminescent device with a structure in which lead terminals and the heat sink are mutually coupled to each other can be easily fabricated.

[22] In addition, it is possible to provide a frame that allows a heat sink to be fixed before a package body is formed, so that fabrication of a luminescent device is facilitated.

[23] Further, there is an advantage in that a large quantity of luminescent devices can be mass-produced at a high rate because a method of fabricating the luminescent devices is similar to that of conventional top luminescent devices.

Brief Description of the Drawings

[24] Figs. 1 and 2 are sectional views of conventional luminescent devices.

[25] Fig. 3 is a conceptual view illustrating a critical angle.

[26] Fig. 4 is a sectional conceptual view of a luminescent device with a lens according to a first embodiment of the present invention.

[27] Fig. 5 is a plan view of the lens according to the first embodiment.

[28] Fig. 6 is a conceptual view illustrating the operation of the total internal reflection lens according to the first embodiment.

[29] Fig. 7 is a graph showing simulation results of the luminescent device with the lens according to the first embodiment.

[30] Figs. 8 and 9 are graphs showing experimental measurement results.

[31] Fig. 10 shows plan and side views of an external frame for use in mass-producing a luminescent device according to a first modification of the embodiment.

[32] Fig. 11 is an exploded perspective view illustrating a luminescent device with a heat sink according to the first modification.

[33] Fig. 12 shows enlarged plan and side views illustrating a state where the luminescent device with the heat sink according to the first modification is formed in an external frame.

[34] Figs. 13 (a) and (b) are top and bottom perspective views of the luminescent device according to the first modification.

[35] Figs. 14 (a) and (b) and Figs. 15 (a) to (c) are sectional views of the luminescent device according to the first modification.

[36] Fig. 16 is a perspective view illustrating a lead frame for use in mass-producing a luminescent device according to a second modification of the embodiment.

[37] Fig. 17 is a flowchart illustrating a method of fabricating the luminescent device according to the second modification.

[38] Figs. 18 to 28 are perspective views illustrating the method of fabricating the luminescent device in accordance with the flowchart.

[39] Fig. 29 is a conceptual sectional view of a luminescent device with a lens according to a second embodiment of the present invention.

[40] Fig. 30 is a perspective view of the lens according to the second embodiment.

[41] Fig. 31 is a conceptual view illustrating the operation of the total internal reflection lens according to the second embodiment.

[42] Fig. 32 is a graph showing simulation results of the luminescent device according to the second embodiment.

[43] Fig. 33 is a conceptual sectional view of a luminescent device with a lens according to a third embodiment of the present invention.

[44] Fig. 34 is a perspective view of the lens according to the third embodiment.

[45] Fig. 35 is a conceptual view illustrating the operation of the total internal reflection lens according to the third embodiment.

[46] Fig. 36 is a graph showing simulation results of the luminescent device according to the third embodiment.

[47] Fig. 37 is a conceptual sectional view of a luminescent device with a lens according to a fourth embodiment of the present invention.

[48] Fig. 38 is a perspective view of the lens according to the fourth embodiment.

[49] Fig. 39 is a conceptual view illustrating the operation of the total internal reflection lens according to the fourth embodiment.

[50] Fig. 40 is a graph showing simulation results of the luminescent device according to the fourth embodiment.

[51] Fig. 41 is a conceptual sectional view of a luminescent device with a lens according to a fifth embodiment of the present invention.

[52] Fig. 42 is a perspective view of the lens according to the fifth embodiment.

[53] Fig. 43 is a conceptual view illustrating the operation of the total internal reflection lens according to the fifth embodiment.

[54] Fig. 44 is a graph showing simulation results of the luminescent device according to the fifth embodiment.

Best Mode for Carrying Out the Invention

[55] Hereinafter, preferred embodiments of the present invention will be described in detail with reference to the accompanying drawings. However, the present invention is not limited to the embodiments but may be implemented into different forms. These embodiments are provided only for illustrative purposes and for full understanding of

the scope of the present invention by those skilled in the art. Throughout the drawings, like elements are designated by like reference numerals.

[56] Fig. 3 is a conceptual view illustrating a critical angle.

[57] Referring to Fig. 3, the critical angle refers to the the smallest incidence angle θ_c of at which total internal reflection occurs at a refractive boundary when light travels from a material with a high refractive index n1 to another material with a low refractive index n2. That is, if light meets and is refracted on the other material (n2< n1) as shown in Fig. 3 (b), the incidence angle that results in a refraction angle of 90 degrees is referred to as the critical angle. At this time, the incidence angle refers to an angle θ_{c1} measured with respect to the normal at the refractive boundary. If an incidence angle is greater than the critical angle, total internal reflection occurs.

[58] In a case where light is vertically incident from one medium n1 on another medium n2 in the two different media (n2<n1) as shown in Fig. 3 (b), if a boundary surface of the medium n1 has a certain slope, an angle defined between the incident light and the normal perpendicular to the boundary surface becomes greater than the critical angle ($0_{c2}>\theta_{c1}$). As a result, the light is not transmitted through the other medium n2 after passing through the medium n1 but is reflected toward the inside of the medium n1. With the use of the total internal reflection phenomenon of light, the light is not transmitted but reflected even on a transparent surface. Here, one of the media may be a material with superior transmittancy, and the other medium may be air.

[59] <Embodiment 1>

[60] Fig. 4 is a sectional conceptual view of a luminescent device with a lens according to a first embodiment of the present invention, Fig. 5 is a plan view of the lens according to the first embodiment, Fig. 6 is a conceptual view illustrating the operation of the total internal reflection lens according to the first embodiment, Fig. 7 is a graph showing simulation results of the luminescent device with the lens according to the first embodiment, and Figs. 8 and 9 are graphs showing experimental measurement results.

[61] Referring to Figs. 4, 5 and 6, the luminescent device with the lens according to this embodiment comprises a substrate 100; a luminescent chip 110 mounted on the substrate 100; and a lens that encapsulates the luminescent chip 110 and has a V-shaped first total reflection surface 121 with a predetermined slope with respect to a central axis, a second total reflection surface 122 extending outward therefrom with a slope smaller than that of the first total reflection surface 121, and a curved refractive surface 123 extending downward from a periphery of the second total reflection surface 122. Here, it is preferred that the curved refractive surface be in the form of a part of an ellipse.

[62] First, the aforementioned lens of this embodiment will be described below.

[63] The first total reflection surface 121 is made in the form of a V-shaped recess over the luminescent chip 110, the curved refractive surface 123 is formed to be rounded downward from the periphery of the second total reflection surface 122, and the second total reflection surface 122 is formed to be inclined upward between the recess and a periphery of the refractive surface 123. Assuming that the height T of the entire lens 120 is 1 as shown in Fig. 4, the height T2 of the first reflection surface 121 is 1/4 to 1/2, and the height T1 of the second reflection surface 122 is 1/4 to 1/2. As shown in the figure, the height of the refractive surface is the same as the entire lens. Assuming that the diameter C of the entire lens 120 is 1 as shown in Fig. 5, the maximum diameter A of the first reflection surface 121 is 1/8 to 1/3, and the maximum diameter B of the second reflection surface 122 is 1/6 to 1/2.

[64] Further, it preferred that the curved refractive surface 123 be made in the form of an ellipse and a ratio of minor and major axes of the ellipse be in a range of 1:2 to 1:4. More preferably, the ratio of the minor and major axes is 1:3.

[65] At this time, as described above, each of the slopes of the reflection surfaces 121 and 122 should be set such that an angle defined by the total reflection surface and light emitted from the luminescent chip 110 and incident on the total reflection surface becomes greater than a critical angle. That is, since the critical angle varies depending on a refractive index of the lens 120, the lens 120 of this embodiment is made of a material with a refractive index of 1.2 to 2.0 so hat the critical angle becomes 30 to 60 degrees.

[66] As such, in order that the angle defined by the total reflection surface and light incident on the total reflection surface 121 or 122 becomes greater than the critical angle, this embodiment is implemented such that the slope of the first reflection surface 121 is 30 to 89 degrees, and the slope of the second reflection surface 122 is 20 to 60 degrees. At this time, the slopes refer to angles defined by the first and second reflection surfaces 121 and 122 and the lower substrate 100. Preferably, the slope of the first reflection surface 121 is 40 to 70 degrees and the slope of the second reflection surface 122 is 30 to 50 degrees.

[67] Accordingly, as shown in Fig. 6, light that is incident from a light source (luminescent chip) in a range of ±40 to ±45 with respect to an x-axis direction (vertical direction) is totally reflected on the first and second total reflection surfaces 121 and 122 toward sides of the lens 120 (in a horizontal direction), and then emitted in a y-axis direction through the single elliptical refractive surface 123. Meanwhile, light that is incident out of the range of ±40 to ±45 degrees with respect to the x-axis direction is immediately refracted through the curved refractive surface 123 and then emitted in the y-axis direction. In this embodiment, based on about 42 degrees, light is totally reflected on the total reflection surfaces 121 and 122 and then emitted through the

refractive surface at the side of the lens, or the light is emitted through the refractive surface without passing through the total reflection surfaces 121 and 122.

[68] As such, the lens 120 of the present invention is constructed to have the total reflection surfaces with different slopes with respect to a central axis and the curved refractive surface 123 at the periphery of the lens, so that a peak value of luminous intensity is located in a range of ±10 with respect to ±80 as shown in Figs. 7,8 and 9. Further, the luminous intensity at zero degree is minimized to be 0 to 20% of the peak value. Preferably, it is minimized to be 5 to 10% of the peak value.

[69] In Fig. 7, a simulation was made on condition that a lens 120 with a refractive index of 1.5 was used, an angle defined by the first total reflection surface 121 and light emitted from the luminescent chip 110 was about 50 degrees, which was greater than the critical angle, and an angle defined by the second total reflection surface 122 and light emitted from the luminescent chip 110 was about 43 degrees. Then, luminous intensity was measured in a range of +90 to -90 degrees with respect to a region where the luminescent chip was located. The simulation results are shown in the graph. As shown in the graph of Fig. 7, the luminous intensity is the highest in the vicinity of ±80 degrees. That is, the luminous intensity is about 0.93 at -80 degrees and about 0.96 at +78 degrees. The luminous intensity is not greater than 0.1 in a range of ±40 degrees.

[70] In Fig. 8, an experiment was performed on condition that a lens 120 with a refractive index of 1.5, an angle defined by the first total reflection surface 121 and light emitted from the luminescent chip 110 was about 50 degrees, which was greater than the critical angle, and an angle defined by the second total reflection surface 122 and light emitted from the luminescent chip 110 was about 43 degrees. Then, luminous intensity was measured in a range of +90 to -90 with respect to a region where the luminescent chip was located. The experimental results are shown in the graph. In Fig. 9, the results are shown in polar coordinates. As shown in the graphs of Figs. 8 and 9, the luminous intensity is the highest in the vicinity of ±75 degrees with respect to the luminescent chip, i.e., a luminescent device. That is, the luminous intensity is about 1 at -74 degrees and about 0.99 at +78 degrees. The luminous intensity is not greater than 0.1 in a range of ±20 degrees and not greater than 0.2 in a range of ±40 degrees.

[71] This is because light totally reflected on the first and second reflection surfaces 121 and 122, and light refracted through the refractive surface 123 travels in the side direction of the luminescent device.

[72] The aforementioned lens 120 of the present invention may be fabricated through an injection molding process or through a grinding process of grinding a top surface of the lens 120 with an elliptical contour. In the case where the lens of the present invention is fabricated by means of such fabricating methods, since the lens has a refractive surface in the form of a single elliptical refractive surface, the lens can be easily

fabricated, thereby reducing a defective rate and fabricating costs. In addition, as compared with the aforementioned prior art in which a plurality of refractive surfaces of a lens have their slopes over certain distances, resulting in a large size, the present invention enables improvement of side illumination effects and fabrication of a lens with a compact size since the lens has a single refractive surface in the form of an ellipse.

[73] Further, the conventional lens has the refractive surfaces in the form of sawteeth indented toward a central axis, but the lens of the present invention has the refractive surface formed to extend outward from the periphery of the total reflection surface.

[74] All types of luminescent chips for emitting light through PN junction can be used as the luminescent chip 110, and a plurality of luminescent chips 110 may be mounted on the substrate.

[75] A first modification of a luminescent device including the lens according to the aforementioned first embodiment will be described below with reference to the accompanying drawings.

[76] Fig. 10 shows plan and side views of an external frame for use in mass-producing a luminescent device according to the first modification of the embodiment, Fig. 11 is an exploded perspective view illustrating a luminescent device with a heat sink according to the first modification, and Fig. 12 shows enlarged plan and side views illustrating a state where the luminescent device with the heat sink according to the first modification is formed in an external frame.

[77] As shown in Fig. 10, the external frame 201 for use in fabricating luminescent devices according to this modification is formed with a plurality of unit bodies each of which comprises lead terminals 200 and connection terminals 210 at a predetermined interval. The lead terminals 200 are formed in pairs integrally with the connection terminals 210, and the connection terminals 210 are formed as a symmetric structure to define a hollow portion 240 with a predetermined shape on a central axis. For the sake of easy description of the structure of the lead terminal, the lead terminal 200 and the connection terminal 210 are described as separate members. However, the term "lead terminal" may be used to express a meaning including both the lead terminal 200 and the connection terminal 210.

[78] Further, as described above, the connection terminals 210 defining the hollow portion 240 are supported by panel supports 220 to be fixed to the external frame 201, and the panel supports perform the function of fixing the positions of the connection terminals 210 when first and second package housings 300 and 310 to be described later are fixed.

[79] In the meantime, although the hollow portion 240 formed at the center of the symmetric connection terminals 210 has a hexagonal shape in this modification, it may

take the shape of a circle or a polygon with more than four sides.

[80] After the external frame 201 for use in fabricating the luminescent device according this modification is formed as such, the first and second package housings 300 and 310, and a heat sink 330 are sequentially secured thereto to form a structure shown in Fig. 11.

[81] That is, the first package housing 300 with a predetermined shape (rectangular shape) is located on the top of the pair of connection terminals 210 formed integrally with the lead terminals 200 in the external frame 201, and the second package housing 310 is located on the bottom of the connection terminals 210. Further, the lens 120 with the total reflection surfaces 121 and 122 and the refractive surface 123 according to the embodiment is fixed on the first package housing 300.

[82] The first package housing 300 is recessed at a central portion thereof to contain an encapsulant and has a through-hole 380 for exposing the hollow portion 240 and terminal portions of the connection terminals 210 at the bottom thereof. Although the through-hole 380 has the same area as the recessed portion, it may have an area smaller than that of the recessed portion as shown in the figure. The recessed portion and the through-hole 380 form an opening portion of the package housing. A stepped portion 390 is formed in an inner surface of the recessed portion to contain the encapsulant, which will be described later, for a luminescent device.

[83] An upper surface of the second package housing 310 is formed with receiving grooves 320 that have the same shape as the connection terminals 210 to receive the connection terminals 210 therein, and a lower surface of the second package housing 310 is formed with a heat sink-seating grooves 370 into which the heat sink 330 to be described later can be inserted.

[84] Further, a circular through-hole 350 is formed at the center of the second package housing 310 to receive an insertion projection 340 of the heat sink 330 therein, and an inner space of the insertion projection 340 becomes a luminescent chip-seating portion 360 in which a luminescent chip 400 to be described later will be fixedly seated.

[85] Meanwhile, the first and second package housings 300 and 310 in the present invention can be made of materials such as thermal conductive plastics or high thermal conductive ceramics. The thermal conductive plastics include acrylonitrile butadiene styrene (ABS), liquid crystalline polymer (LCP), polyamide (PA), polyphenylene sulfide (PPS), thermoplastic elastomer (TPE) and the like. The high thermal conductive ceramics include alumina (Al_2O_3), silicon carbide (SiC), aluminum nitride (AlN) and the like. Among the ceramics, aluminum nitride (AlN) has properties equivalent to those of alumina and is superior to alumina in view of thermal conductivity. Thus, aluminum nitride has been widely used in practice.

[86] In a case where the material of the first and second package housings 300 and 310

is thermal conductive plastics, the first package housing 300 and the second package housing 310 are respectively located on the top and bottom of the connection terminals 210 symmetrically formed in the external frame 201, and then fixedly attached thereto through compression at high temperature. Here, it is important to consider the shape of the through-hole 380 and the stepped portion 390, which are formed within the first package housing 300. That is, the through-hole 380 and the stepped portion 390 are formed by locating the first and second package housings 300 and 310 on the top and bottom of the external frame 201 and by pressing them using a pressing means with a projection, which takes the shape corresponding to the shape of the though-hole 380 and the stepped portion 390, at high temperature.

[87] Meanwhile, in a case where the material of the first and second package housings 300 and 310 is ceramics, the first package housing 300 and the second package housing 310 are fabricated in advance to have an accurate size and shape. That is, since the ceramics cannot be formed into a desired shape in a final application step due to its property by which the ceramics is formed into a desired shape at a high temperature of greater than 1000°C, the first and second package housings 300 and 310 are fabricated in advance to have a precise size and shape. At this time, the through-hole 380 and the stepped portion 390 should be formed in the first package housing 300 to be fabricated.

[88] Therefore, the ceramic first and second package housings 300 and 310 fabricated in advance as described above are respectively located on the top and bottom of the connection terminals 210 of the external frame 201, and then fixedly attached thereto using an adhesive with high adhesive strength.

[89] A luminescent device to be assembled into the external frame 201 fabricated as above is formed on each of the unit bodies each of which comprises the lead terminals 200 formed in the external frame 201 and the connection terminals 210 formed in the symmetrical manner integrally with the lead frames, as shown in Fig. 12.

[90] Further, at least one luminescent chip 400 is fixedly attached to the luminescent chip-seating portion 360 at the center of the heat sink 330 constituting the luminescent device formed as described above, and the luminescent chip is electrically connected to the connection terminals 210 through connection wires 420.

[91] Further, a zener diode 410 can be mounted in the luminescent chip-seating portion 360 and then connected, with polarity matching, to the mounted luminescent chip 400 through the connection wire 420 so as to electrically protect the luminescent chip 400. The zener diode 410 is a semiconductor device using a phenomenon in which when a relatively high reverse voltage is applied to a p-n or n-p junction of a semiconductor, a high current is started to rapidly flow with a certain voltage, and the voltage is sustained to be constant. If the zener diode 410 is applied to the luminescent device, a constant voltage can be sustained even though static electricity or a sudden current is

supplied, thereby enhancing reliability of a product.

[92] Figs. 13 (a) and (b) are top and bottom perspective views of the luminescent device according to this modification, and Figs. 14 (a) and (b) and Figs. 15 (a) to (c) are sectional views of the luminescent device according to this modification.

[93] A plurality of luminescent devices according to this modification are formed in the external frame 201 through the aforementioned fabricating process, and each of the formed luminescent devices is cut and withdrawn from the external frame 201 around the first and second package housings 300 and 310.

[94] In the withdrawn luminescent device of the present invention, as shown in Fig. 13, the lead terminals 200 are bent by a predetermined length and at a predetermined angle to match with connection terminals on a PCB substrate.

[95] As shown in Figs. 13 (b) and 14, the heat sink 330 of the luminescent device according to the present invention is fixed to the bottom of the second package housing 310 while being inserted upward thereinto, such that it protrudes beyond the lower surface of the second package housing 310. That is, this is because the surface of the heat sink 330 protruding downward beyond the lower surface of the second package housing 310 is intended to come into direct contact with a heat dissipation member (not shown) so as to maximize heat dissipation effects when the luminescent device is fabricated and applied in practice.

[96] Further, as shown in Fig. 14, stepped portions 390a and 390b (collectively designated by 390) are doubly formed within the inner space of the first package housing 300, so that they can be used as fixing steps required for molding the encapsulant to be described later or for mounting the lens 120 with the total reflection surfaces and the refractive surface according to this embodiment.

[97] Further, an outer surface of the insertion projection 340 of the heat sink 330 co nstituting the luminescent device is formed with a latching step 340a to be fixedly inserted into a groove formed in a wall defining the through-hole 350 in the second package housing 310, so that the insertion projection 340 of the heat sink 330 can be firmly fixed to the through-hole 350 of the second package housing 310. The latching step 340a may be formed on the body of the heat sink. The latching step 340a may be formed at an edge of an uppermost portion of the insertion projection 340 of the heat sink 330. At this time, the latching step 340a is coupled to the upper surface of the second package housing 310, thereby fixing the heat sink 330.

[98] Meanwhile, in the luminescent device according to this modification, the encapsulant 450 for protecting the luminescent chip 400 and the connection wires 420 while transmitting light emitted from the luminescent chip 400 is molded within the inner space of the first package housing 300.

[99] As shown in Fig. 15 (a), the encapsulant 450 may be epoxy resin and contain a

fluorescent substance for converting light emitted from the luminescent chip 400.

[100] In addition, the encapsulant 450 may contain a diffusing substance for uniform distribution of light.

[101] Further, as shown in Fig. 15 (b), if the encapsulant 450 is epoxy resin containing a fluorescent substance, the encapsulant may be further molded with the epoxy resin 470 on the top thereof to obtain more stable molding effects.

[102] Further, as shown in Fig. 15 (c), the luminescent device is molded with the encapsulant 450 as shown in Figs. 15 (a) and (b), and the lens 120 with the total reflection surfaces 121 and 122 and the refractive surface 123 according to the present invention is then fixed to the upper stepped portion 390b of the first package housing 300 to ensure side luminescence and to more stably protect the internal, mounted objects (luminescent chip and bonding wires).

[103] Although the molding with the encapsulant and the subsequent fixing of the lens have been described in the above, this modification is not limited thereto. The encapsulant and the lens may be formed integrally with each other. That is, the encapsulant may be formed with total reflection surfaces and a refractive surface on the top thereof so that it can function as the lens of the present invention, or the lens may also be used as the encapsulant.

[104] A luminescent device including the lens of the embodiment in accordance with a second modification will be described below with reference to the accompanying drawings.

[105] Fig. 16 is a perspective view illustrating a lead frame for use in mass-producing the luminescent device according to the second modification of the embodiment, Fig. 17 is a flowchart illustrating a method of fabricating the luminescent device according to this modification, and Figs. 18 to 21 are perspective views illustrating the method of fabricating the luminescent device in accordance with the flowchart.

[106] First, a lead frame in this modification will be described with reference to Fig. 16.

[107] Referring to Fig. 16, the lead frame 500 has a heat sink support ring 530 into which a heat sink can be inserted thereinto. The support ring 530 may be in the form of a circular ring as shown in the figure. However, it is not limited thereto but may be in the form of a polygonal ring.

[108] In the meantime, an external frame 510 surrounds the support ring 530. The external frame 510 is located to be spaced apart from the support ring 530. The external frame 510 may be in the form of a square as shown in the figure. However, it is not limited thereto but may be in the form of a circle or other polygons.

[109] The external frame 510 and the support ring 530 are connected by at least two connection terminals 550a and 550b. The connection terminals 550a and 550b are located on both opposite sides of the external frame 510 and fix the support ring 530 to

the external frame 510. Additional connection terminals except the connection terminals 550a and 550b may connect the support ring 530 to the external frame 510.

[110] Further, at least two lead terminals 570a, 570b, 570c, 590a, 590b and 590c extend toward the support ring 530 from the external frame 510. However, the lead terminals are spaced apart from the support ring 530. As shown in the figure, the lead terminals 570a, 570b, 570c, 590a, 590b and 590c have wider distal ends in the vicinity of the support ring 530. Meanwhile, it is preferred that the lead terminals be arranged on both opposite sides of the external frame 510.

[111] The number of required lead terminals is determined depending on the kinds and number of luminescent chips to be mounted and bonding wire-connecting methods. However, it is preferred that the lead frame 500 have a large number of lead terminals to be used in a variety of cases. As shown in the figure, the lead terminals are arranged in a direction perpendicular to the connection terminals 550a and 550b, so that a large number of lead terminals can be arranged in an identical direction.

[112] The lead frame 500 according to an embodiment of the present invention can be fabricated by pressing a plate made of phosphor bronze, which is a copper alloy, using a press die. Meanwhile, although one lead frame 500 is shown in Fig. 16, a plurality of lead frames 500 may be fabricated and arranged in one phosphor bronze plate. In particular, a plurality of lead frames 500 fabricated in one phosphor bronze plate are used for mass production of the luminescent device.

[113] Referring to Fig. 17, the lead frame 500 described above with reference to Fig. 16 is prepared (S01).

[114] As described above, the lead frame 500 can be fabricated by pressing a phosphor bronze plate, and a plurality of lead frames 500 can be fabricated and arranged in one phosphor bronze plate.

[115] Referring to Figs. 17 and 18, a heat sink 600 fixedly insertable into the support ring 530 of the lead frame 500 is prepared. The heat sink 600 has a top surface on which a luminescent chip is to be mounted. It is preferred that the top surface of the heat sink 600 have a diameter smaller than the inner diameter of the support ring 530 so that the heat sink can be easily inserted thereinto and that the outer diameter of the side of the heat sink 600 be larger than the inner diameter of the support ring 530.

[116] Further, the heat sink 600 may have a support ring-receiving groove 630a enabling the heat sink to be fastened to the support ring 530. Furthermore, the support ring-receiving groove 630a may be provided as a spiral groove for facilitating the fastening thereof to the support ring 530.

[117] Meanwhile, the heat sink 600 may have a base 610 and a projection 630 protruding upwardly from the center of the base 610. At this time, the support ring-receiving groove 630a is disposed in a side surface of the projection 630. The base portion 610a

and the projection 630 may be in the form of cylinders as shown therein. However, they are not limited thereto but may be in the form of polygonal posts. Although the projection 630 can have a shape similar to an inner shape of the support ring 530, it is not limited thereto. That is, the support ring 530 may be in the form of a circular ring, and the projection 630 may be in the form of a square post.

[118] The heat sink 600 can be fabricated of a metal with high thermal conductivity or a thermal conductive resin using a press or molding technique. The heat sink 600 is fabricated using a process separate from a process of preparing the lead frame 500. Therefore, the order of the steps of preparing the lead frame 500 (S01) and the heat sink 600 (S03) may be changed, or the steps may be performed at the same time.

[119] Referring to Figs. 17 and 19, the heat sink 600 is fixedly inserted into the support ring 530 of the lead frame 500 (S05). Since the outer diameter of the side of the heat sink 600 is larger than the inner diameter of the support ring 530, the heat sink 600 can be forcibly inserted into and fixed to the support ring 530.

[120] Meanwhile, if the support ring-receiving groove 630a is formed, the support ring 530 is received in the support ring-receiving groove 630a and supports the heat sink 600. At this time, it is preferred that a portion of the support ring 530 be received in the support ring-receiving groove 630a, and the remainder thereof protrude to an outer surface of the projection 630, as shown in figure. Further, if the support ring-receiving groove 630a a spiral groove, the heat sink 600 can be screwed and fastened to the support ring 530.

[121] Referring to Figs. 17 and 20, after the heat sink 600 is fixed to the lead frame 500, a package body 700 is formed using an insert molding technique (S07). The package body 700 can be formed through insert molding with a thermosetting or thermoplastic resin.

[122] The package body 700 is formed around the heat sink 600 to support the support ring 530, the connection terminals 550a and 550b, the lead terminals 570a, 570b, 570c, 590a, 590b and 590c, and the heat sink 600. Some portions of the connection terminals and the lead terminals protrude to the outside of the package body 700. Further, the package body 700 has an opening through which an upper end of the heat sink 600 and the lead terminals are exposed.

[123] As shown in Fig. 20, some portions of the support ring 530 and the connection terminals 550a and 550b can be exposed through the opening. Accordingly, a groove is formed in the top of the package body 700. On the contrary, as shown in Fig. 21, the package body 700 can cover most portions except the upper end of the heat sink 600, and expose only some portions of the lead terminals. Thus, a plurality of sub-openings can be defined.

[124] Even in this case, it is preferred that a groove surrounded by the sidewall of the

package body be also formed at an upper portion of the package body 700, as shown in the figure.

[125] Further, the lower surface of the heat sink 600 is exposed to the outside. In addition thereto, the side of the base portion 610 may also be exposed. Accordingly, heat dissipation through the heat sink 600 can be promoted.

[126] Meanwhile, although the package body 700 can take the shape of a cylinder, as shown in Figs. 20 and 21, it is not limited thereto but may be the shape of a polygonal post such as a square post.

[127] After the heat sink 600 is coupled to the lead frame 500, the package body 700 is formed by insert-molding a thermosetting or thermoplastic resin, so that the heat sink 600 and the package body 700 are strongly coupled to with each other.

[128] Referring to Figs. 17 and 22, portions of the connection terminals 550a and 550b, which protrude to the outside of the package body 700, are cut and removed (S09). As a result, the cut connection terminals 560a and 560b are left in the package body 700, and these connection terminals and the support ring 530 more prevent the heat sink 600 from being separated from the package body 700.

[129] In the meantime, while the connection terminals are cut, the remainder of the lead terminals except some lead terminals, which are intended to be used for applying a current, among the lead terminals protruding to the outside of the package body 700 may be cut and removed together with the connection terminals. For example, as shown in Fig. 23, in a case where only two lead terminals 570c and 590c are needed, the remainder of the lead terminals 570a, 570b, 590a and 590b are cut and removed. Further, as shown in Fig. 24, in a case where four lead terminals 570a, 570c, 590a and 590c are needed, the remainder of the lead terminals 570b and 590b are cut and removed.

[130] The process of cutting and removing the lead terminals is a process performed in a case where lead terminals of which the number is larger than that of lead terminals required in a luminescent device are provided in the lead frame 500. Thus, if the number of lead terminals required in a luminescent device is identical with that of lead terminals provided in the lead frame 500, the process of cutting and removing lead terminals is not performed. Further, since left excess lead terminals, if any, do not influence the operation of a luminescent device, the process of cutting and removing the excess lead terminals is not an inevitable process.

[131] Referring to Figs. 17 and 25, luminescent chips 800 are mounted on an upper surface of the heat sink 600 (S11). The luminescent chip 800 may be a one-bond die with an electrode on each of top and bottom surfaces thereof or a two-bond die with two electrodes on a top surface thereof.

[132] If the luminescent chip 800 is a one-bond die, it is preferred that the heat sink 600

be made of a metallic material with electric conductivity. At this time, the luminescent chip 800 is mounted on the heat sink 600 by means of an electric conductive adhesive such as silver epoxy. Otherwise, if all the luminescent chips 800 to be mounted on the heat sink 600 are two-bond dies, the heat sink 600 is not necessarily to be electrically conductive, and they may be mounted on the heat sink 600, for example, by means of various kinds of thermally conductive adhesives.

[133] In the meantime, a plurality of luminescent chips 800 may be mounted on the heat sink 600. Further, the plurality of luminescent chips 800 may be luminescent chips that can emit light with different wavelengths. For example, as shown in Fig. 25, three luminescent chips 800 can be mounted. At this time, the luminescent chips 800 may be luminescent chips for respectively emitting red, green and blue light. Accordingly, a luminescent device emitting light with all kinds of colors can be provided using the luminescent chips 800.

[134] Referring to Figs. 17 and 26, luminescent chips 810, 830 and 850 and the lead terminals 570a, 570b, 570c, 590a, 590b and 590c are electrically connected through bonding wires (S13). In a case where all the luminescent chips 810, 830 and 850 are two-bond dice, each of the luminescent chips is connected to two lead terminals through two bonding wires. Meanwhile, as shown in the figure, the luminescent chips 810, 830 and 850 can be electrically connected to different pairs of lead terminals, respectively. Moreover, one common lead terminal (e.g., 570b) and the luminescent chips can be connected through the bonding wires, and the other lead terminals (e.g., 590a, 590b, 590c) located at a side opposite to the common lead terminal can be connected to the luminescent chips through different bonding wires, respectively. In this case, the luminescent chips can be driven with different currents, respectively.

[135] Meanwhile, as shown in Fig. 27, a one-bond luminescent chip 810a and two-bond luminescent chips 830 and 850 can be mounted together. At this time, one lead terminal 570b of the lead terminals is electrically connected to the heat sink 600 through a bonding wire. Therefore, the lead terminal 570b is electrically connected to a bottom surface of the one-bond luminescent chip 810a through a bonding wire and the heat sink 600. There are various combinations of one-bond dies and two-bond dies, and one of various methods of connecting bonding wires in the combinations can be selected.

[136] Further, one of various methods of connecting lead terminals to luminescent chips can be selected, and a plurality of luminescent chips may be connected in series, in parallel or in series-parallel.

[137] In the meantime, after the luminescent chips 810, 830 and 850 and the lead terminals are connected through the bonding wires, the luminescent chips 810, 830 and 850 are encapsulated with an encapsulant (not shown) (S15). The encapsulant can en-

capsulate the luminescent chips and the bonding wires by filling the opening of the package body 700.

[138] Further, the encapsulant can contain a fluorescent substance. For example, the fluorescent substance can convert the color of light from blue into yellow, or into green and red. Thus, if a luminescent chip emitting blue light is mounted on the heat sink 600, it is possible to provide a luminescent chip emitting white light to the outside by converting some of light emitted from the luminescent chip into yellow, or green and red light. In addition thereto, the encapsulant may further contain a diffusing substance. The diffusing substance prevents the luminescent chips and the bonding wires from being viewed from the outside by dispersing light emitted from the luminescent chips, and the diffusing substance also enables light to be uniformly emitted to the outside.

[139] After the luminescent chips are encapsulated with the encapsulant, the lens 120 with the total reflection surfaces 121 and 122 and the refractive surface 123 according to this embodiment is attached on the package body 700 (S17). The lens 120 is used to emit light within a predetermined directional angle, which guides and emits light from the luminescent chip 800 toward the side of the lens in this embodiment.

[140] Although the processes of forming the encapsulant and attaching the lens have been described above as separate processes for the sake of convenience of description, it is not limited thereto, and the luminescent chips may be encapsulated directly with a lens with total reflection surfaces and a refractive surface. That is, the total reflection surfaces and the refractive surface may be formed on the top of the encapsulant.

[141] Referring to Figs. 17 and 28, the lead terminals 570a, 570b, 570c, 590a, 590b and 590c are cut from the external frame 510 and then bent (S19). As a result, a luminescent device that can be subjected to surface mounting is obtained. Meanwhile, the step of cutting and removing the connection terminals (S09) may be performed together with step S19.

[142] Next, the luminescent device of this modification will be described with reference to Fig. 28.

[143] Referring back to Fig. 28, the luminescent device includes the heat sink support ring 530. The support ring 530 is made of a copper alloy such as phosphor bronze. Although the support ring 530 can take the shape of a circular ring as shown in the figure, it is not limited thereto but may take the shape of a polygonal ring. The cut connection terminals 560a and 560b are disposed while extending from the outside of the support ring 530. The cut connection terminals 560a and 560b can be located at opposite sides of the support ring 530.

[144] As described with reference to Fig. 18, the heat sink 600 is inserted into the support ring 530.

[145] Meanwhile, at least two lead terminals 570a, 570b, 570c, 590a, 590b and 590c are arranged at the both sides of the support ring while being spaced apart from the support ring 530 and the heat sink 600. The lead terminals may be bent to enable surface mounting.

[146] In addition thereto, the package body 700 supports the heat sink 600 and the lead terminals by means of molding. The package body 700 has the opening through which the upper end of the heat sink 600 and some portions of the lead terminals are exposed at the upper portion of the package body. Meanwhile, the portions of the lead terminals protruding outward through the sidewall of the package body 700.

[147] As described with reference to Fig. 20, some portions of the support ring 530 and the connection terminals 550a and 550b can be exposed through the opening. Accordingly, the grooves are formed at the upper portion of the package body 700. Further, as described with reference to Fig. 21, the package body 700 can cover most portions except the upper end of the heat sink 600 and expose only some portions of the lead terminals. Thus, a plurality of openings can be formed. Even in this case, it is preferred that the package body 700 have the groove surrounded by the sidewall of the package body as shown in Fig. 21.

[148] The package body 700 is a plastic resin body formed by insert-molding a thermosetting or thermoplastic resin after the heat sink 600 is fixedly inserted into the support ring 530.

[149] The luminescent chips 810, 830 and 850 are mounted and located on the upper surface of the heat sink 600. Although the luminescent chips shown in Fig. 28 are two-bond dies, they are not limited thereto. The luminescent chips may be one-bond dies or a combination of one-bond and two-bond dies.

[150] The luminescent chips are electrically connected to the lead terminals through the bonding wires. In a case where the luminescent chips are two-bond dies, each of the luminescent chips is electrically connected to two lead terminals through two bonding wires. Meanwhile, in a case where at least one of the luminescent chips is a one-bond die, the heat sink is electrically connected to at least one lead terminal through a bonding wire.

[151] There are various methods of connecting the lead terminals and the luminescent chips and one of them can be selected according to characteristics of required luminescent chips.

[152] Meanwhile, the lens 120 with the total reflection surfaces 121 and 122 and the refractive surface 123 according to this embodiment covers and encapsulates the luminescent chips.

[153] As described above, the luminescent device with the lens according to this embodiment is not limited to the aforementioned modification but may be applied to

various kinds of luminescent chips.

[154] Further, the present invention is not limited to the shape of the lens according to the embodiment but may further include a linear refractive surface.

[155] A lens further comprising a horizontal linear refractive surface according to a second embodiment will be described below. In the following second embodiment, a description thereof overlapping with that of the previous embodiment will be omitted. Moreover, a description of a modification of a luminescent device with the lens will also be omitted since it overlaps with that of the previous embodiment.

[156] <Embodiment 2>

[157] Fig. 29 is a conceptual sectional view of a luminescent device with a lens according to a second embodiment of the present invention, Fig. 30 is a perspective of the lens according to the second embodiment, Fig. 31 is a conceptual view illustrating the operation of the total internal reflection lens according to the second embodiment, and Fig. 32 is a graph showing simulation results of the luminescent device according to the second embodiment.

[158] Referring to Figs. 29, 30 and 31, the lens of this embodiment comprises a first total reflection surface 1121 with a V-shaped section and a certain slope with respect to a central axis x; a second total reflection surface 1122 with a slope smaller than that of the first total reflection surface 1121; a linear first refractive surface 1123a extending from a periphery of the second total reflection surface 1122 in a direction perpendicular to the central axis x; and a curved second refractive surface 1123b extending downward from a periphery of the linear first refractive surface 1123a.

[159] As shown in Fig. 29, the first total reflection surface 1121 is formed in the shape of a V-shaped recess above a luminescent chip 1110, and the second total reflection surface 1122 is formed to extend upward from the recess and to have a gradient smaller than that of the first reflection surface 1121 with respect to the central axis x. Meanwhile, the linear refractive surface 1123a is made in the form of a straight line parallel to a substrate 1100 on which the luminescent chip 1110 is to be mounted, and the curved second refractive surface 1123b is made in the form of a downward round curve extending from the first refractive surface 1123a. Of course, the first refractive surface 1123a may be formed to be parallel to the bottom of the lens 120. The first and second refractive surfaces 1123a and 1123b refer to surfaces that refract light guided to an edge of the lens toward the side thereof.

[160] Assuming that the diameter of the entire lens 120 is 1 in the above, the first reflection surface 1121 is formed at the center of the lens 1120, and the maximum diameter of the first reflection surface 1121 is 1/12 to 1/6; the second reflection surface 1122 is formed to cover the first reflection surface 1121 and has the maximum diameter of 1/7 to 1/3; the first refractive surface 1123a is constructed in the form of a

circular strip to surround the second reflection surface 1122 and has the maximum diameter of 1/5 to 2/3; and the diameter of the second refractive surface 1123b is identical with that of the entire lens 1120. Here, the width of the circular strip-shaped first refractive surface 1123a is 1/16 to 1/8 of the diameter of the lens. Assuming that the height of the lens 1120 is 1, the height of the first reflection surface 1121 is 1/6 to 1/2, and the height of the second reflection surface 1122 is 1/6 to 1/2.

[161] The second refractive surface 1123b is made in the form of an ellipse as shown in Fig. 29, and a ratio of minor and major axes of the ellipse is in a range of 1:4 or less. That is, it may be a circle.

[162] At this time, the slope of each of the total reflection surfaces 1121 and 1122 is set such that an angle defined by the total reflection surface and light, which is emitted from the luminescent chip 1110 and is then incident on the total reflection surface, becomes greater than a critical angle, as described above. That is, since the critical angle varies depending on a refractive index of the lens 1120, the lens 1120 of this embodiment is formed of a material with a refractive index of 1.2 to 2.0 so that the critical angle can be in a range of 30 to 60 degrees.

[163] In order to cause the angle defined by the total reflection surface and light incident on the total reflection surface 1121 or 1122 to be greater than the critical angle, the slope of the first reflection surface 1121 is 30 to 89 degrees, and that of the second reflection surface 1122 is 20 to 60 degrees in this embodiment. At this time, the slopes refer to angles defined by the first and second reflection surfaces 1121 and 1122, and the lower substrate 1100. Preferably, the slope of the first total reflection surface 1121 is 40 to 70 degrees and that of the second total reflection surface 1122 is 30 to 50 degrees. Further, it is preferred that the slope of the first refractive surface 1123a be formed to be 10 degrees or less. However, it has been previously described as being in a horizontal state where its slope is zero.

[164] Accordingly, as shown in Fig. 31, light R2 and R3, which is emitted from a light source (luminescent chip) and incident on the first and second total reflection surfaces 1121 and 1122, is totally reflected, and then emerges in a y-axis direction through the rounded second refractive surface 1123b. Light R4 and R1 incident on the first and second refractive surfaces 1123a and 1123b are refracted and then emerge in the y-axis direction.

[165] As such, the lens 1120 of the present invention is formed to have the total reflection surfaces with different slopes at a central portion thereof, and the horizontal surface and the rounded surface at an edge portion thereof, so that a peak value of luminous intensity can be in a range of ±10 with respect to ±83, as shown in Fig. 32.

[166] In Fig. 32, a lens 1120 with a refractive index of 1.5 was used such that an angle defined by the first total reflection surface 1121 and light emitted from the luminescent

chip 1110 became about 50 degrees greater than the critical angle, and an angle defined by the second total reflection surface 1122 and light emitted from the luminescent chip 1110 became about 43 degrees. Then, luminous intensity was simulated in a range of +90 to -90 with respect to a region where the luminescent chip 1110 was located, and the results are shown in the graph. As shown in the graph of Fig. 32, the luminous intensity is the highest in the vicinity of ±83 degrees. That is, the luminous intensity is about 0.97 at +83 degrees and about 0.94 at -83 degrees. Further, the luminous intensity is not greater than 0.2 within ±40.

[167] This is because light totally reflected on the first and second reflection surfaces 1121 and 1122, and light refracted through the first and second refractive surfaces 1123a and 1123b travels in the side direction of the luminescent device.

[168] The lens 1120 of the present invention may be fabricated by means of an injection molding process or a grinding process of grinding a top surface of the lens 1120 with an elliptical curved surface. In a case of fabricating the lens of the present invention in this manner, since the lens is composed of the horizontal linear surface and the elliptical curved surface, its fabrication is facilitated, thereby reducing a defective rate and fabrication costs.

[169] In addition, as described in the previous embodiment, as compared with the aforementioned prior art in which a plurality of refractive surfaces of a lens have their slopes over certain distances, resulting in a large size, the present invention enables improvement of side illumination effects and fabrication of a lens with a compact size since the lens has double refractive surfaces that are in the form of a straight line and an ellipse. Further, the conventional lens has the refractive surfaces indented toward a central axis, but the lens of the present invention has the refractive surface formed to extend outward from the periphery of the total reflection surface.

[170] Although the most preferred embodiment in which the luminescent chip is encapsulated by the lens has been described in the present invention, a certain space (not shown) may be formed between the luminescent chip and the lens. At this time, a material with a refractive index of 1.2 to 2.0 can be selected as a material filled into the space. For example, the space may be filled with epoxy/silicon resin or air/another gas (e.g. nitrogen), or may be under a vacuum condition. Here, a fluorescent material can be further included in the space.

[171] Moreover, although the lens includes the linear surface and the curved surface extending therefrom, it is not limited thereto but may be modified into various shapes. That is, the lens may include a linear surface extending from a curved surface, and the linear surface may be bent. Next, a side illumination lens with a linear surface extending from a curved surface and bent once, and a luminescent device with the lens according to a third embodiment of the present invention will be described below.

[172] In the following third embodiment, a description thereof overlapping with that of the aforementioned embodiment will be omitted. Further, since a description of a modification of a luminescent device with the lens overlaps with that of the aforementioned embodiment, the description will be omitted.

[173] <Embodiment 3>

[174] Fig. 33 is a conceptual sectional view of a luminescent device with a lens according to a third embodiment of the present invention, Fig. 34 is a perspective view of the lens according to the third embodiment, Fig. 35 is a conceptual view illustrating the operation of the total internal reflection lens according to the third embodiment, and Fig. 36 is a graph showing simulation results of the luminescent device according to the third embodiment.

[175] Referring to Figs. 33, 34 and 35, the lens of this embodiment comprises a first total reflection surface 2121 with a V-shaped section and a certain slope with respect to a central axis x; a second total reflection surface 2122 with a slope smaller than that of the first total reflection surface 2121; a curved first refractive surface 2123a extending downward from a periphery of the second total reflection surface 2122; a linear second refractive surface 2123b extending from a periphery of the first refractive surface 2123a in a direction perpendicular to the central axis x; and a linear third refractive surface 2123c extending from a periphery of the second refractive surface 2123b in a direction parallel to the central axis x.

[176] As shown in Figs. 33 and 34, assuming that the diameter of the entire lens 2120 is 1, the first reflection surface 2121 is formed at a central portion of the lens 2120, and the maximum diameter of the first total reflection surface 2121 is 1/12 to 1/6; and the second reflection surface 2122 is formed to surround the first total reflection surface 2121, and the maximum diameter thereof is 1/7 to 1/3. The first refractive surface 2123a is made in the form of an ellipse surrounding the second total reflection surface 2122, and the maximum diameter thereof is 1/2 to 7/8; and the maximum diameter of the second and third refractive surfaces 2123b and 2123c is the same as the entire lens 2120. Here, the width of the second refractive surface 2123b is 1/16 to 1/8 of the diameter of the lens.

[177] Further, assuming that the height of the lens 2120 is 1, the height of the first total reflection surface 2121 is 1/12 to 1/6; the height of the second total reflection surface 2123 is 1/12 to 1/6; the height of the first refractive surface 2123a is 1/4 to 3/4; and the height of the third refractive surface 2123c is 1/4 to 3/4. Here, the first refractive surface 2123a is made in the form of an ellipse as shown in the figures, and a ratio of minor and major axes of the ellipse is formed in a range of 1:4 or less. That is, it may be a circle.

[178] Accordingly, as shown in Fig. 35, light R4 and R5, which is emitted from a light

source (luminescent chip) and is then incident on the first and second total reflection surfaces 2121 and 2122 is totally reflected, and emerges in a y-axis direction through the downward rounded second refractive surface 1123b. Light R3, R2 and R1 incident on the first, second and third refractive surfaces 2123a, 2123b and 2123c is refracted and then emitted in the y-axis direction.

[179] As such, the lens 1120 of the present invention is formed to have total the reflection surfaces with different slopes at the central portion thereof, and the rounded, horizontal and vertical surfaces at an edge thereof, so that a peak value of luminous intensity is located in a range of ±10 with respect to ±64, as shown in Fig. 36.

[180] In Fig. 36, a lens 2120 with a refractive index of 1.5 was used such that an angle defined by the first total reflection surface 2121 and light emitted from the luminescent chip 2110 became about 50 degrees greater than a critical angle, and an angle defined by the second total reflection surface 2122 and light emitted from the luminescent chip 2110 became about 43 degrees. Then, luminous intensity is simulated in a range of +90 to -90 with respect to a region where the luminescent chip 1110 was located, and the results are shown in the graph.

[181] As shown in the graph of Fig. 36, the luminous intensity is the highest in the vicinity of ±64 degrees. That is, the luminous intensity is about 0.99 at +64 degrees and about 0.98 at -64 degrees. Further, the luminous intensity is not greater than 0.2 within ±40 degrees.

[182] As described above, this is because light totally reflected on the first and second reflection surfaces 2121 and 2122, and light refracted through the first to third refractive surfaces 2123a, 2123b and 2123c travels in the side direction of the luminescent device.

[183] Since a method of fabricating the lens and a luminescent device with the lens are the same as the aforementioned embodiment, descriptions thereof will be omitted.

[184] A side illumination lens with a linear surface bent twice and a curved surface extending therefrom, and a luminescent device with the lens according to a fourth embodiment of the present invention will be described below.

[185] In the following fourth embodiment, a description thereof overlapping with that of the aforementioned embodiment will be omitted. Further, since a description of a modification of a luminescent device with the lens overlaps with that of the aforementioned embodiment, the description will be omitted.

[186] <Embodiment 4>

[187] Fig. 37 is a conceptual sectional view of a luminescent device with a lens according to a fourth embodiment of the present invention, Fig. 38 is a perspective view of the lens according to the fourth embodiment, Fig. 39 is a conceptual view illustrating the operation of the total internal reflection lens according to the fourth embodiment, and

Fig. 30 is a graph showing simulation results of the luminescent device according to the fourth embodiment.

[188] Referring to Figs. 37, 38 and 39, the lens of this embodiment comprises a first total reflection surface 3121 with a V-shaped section and a certain slope with respect to a central axis x; a second total reflection surface 3122 with a slope smaller than that of the first total reflection surface 3121; a linear first refractive surface 3123a extending from a periphery of the second total reflection surface 3122 in a direction perpendicular to the central axis x; a linear second refractive surface 3123b extending downward in parallel to the central axis x from a periphery of the first refractive surface 3123a; a linear third refractive surface 3123c extending from a periphery of the second refractive surface 3123b in the direction perpendicular to the central axis x; and a curved fourth refractive surface 3123d extending downward from a periphery of the third refractive surface 3123c.

[189] As shown in Figs. 37 and 38, assuming that the diameter of the entire lens 3120 is 1, the maximum diameter of the first total reflection surface 3121 is 1/12 to 1/6, and the maximum diameter of the second total reflection surface 3122 is 1/7 to 1/3. The maximum diameter of the first refractive surface 3123a is 1/6 to 1/2, and the width of the first refractive surface 3123a is 1/36 to 1/24 of the diameter of the lens 3120. The maximum diameter of the third refractive surface 3123c is 1/5 to 2/3, and the width of the third refractive surface 3123c is 1/24 to 1/7. The diameter of the fourth refractive surface 3123d is the same as the entire lens 3120.

[190] Further, assuming that the height of the lens 3120 is 1, the height of the first total reflection surface 3121 is 1/4 to 3/4; the height of the second total reflection surface 3122 is 1/6 to 1/4; the height of the second refractive surface 3123b is 1/12 to 1/8; and the height of the fourth refractive surface 3123d is 7/8 to 11/12. Here, the fourth refractive surface 3123d is made in the form of an ellipse as shown in the figures, and a ratio of minor and major axes of the ellipse is in a range of 1:4 or less. That is, it may be a circle.

[191] Accordingly, as shown in Fig. 39, light R2 and R6, which is emitted from a light source (luminescent chip) and is then incident on the first and second total reflection surfaces 3121 and 3122, are totally reflected, and emerges in a y-axis direction through the refractive surfaces 3123a, 3123b, 3123c and 3123d. Light R5, R4, R3 and R1 incident on the first to fourth refractive surfaces 3123a, 3123b, 3123c and 3123d are refracted and emerges in the y-axis direction.

[192] As such, the lens 120 of the present invention is formed to have the total reflection surfaces with different slopes at a central portion thereof, and the rounded surface and the plurality of horizontal and vertical surfaces at an edge thereof, so that a peak value of luminous intensity is in a range of ±10 with respect to ±76 as shown in Fig. 40.

[193] In Fig. 40, a lens 3120 with a refractive index of 1.5 was used such that an angle defined by the first total reflection surface 3121 and light emitted from the luminescent chip 3110 became about 50 degrees greater than a critical angle, and an angle defined by the second total reflection surface 3122 and light emitted from the luminescent chip 3110 became about 43 degrees. Then, luminous intensity is simulated in a range of +90 to -90 with respect to a region where the luminescent chip is located, and the results are shown in the graph.

[194] As shown in the graph of Fig. 40, the luminous intensity is the highest in the vicinity of ±76 degrees. That is, the luminous intensity is about 0.98 at +76 degrees and about 0.97 at -77 degrees. Further, the luminous intensity is not greater than 0.2 within ±40 degrees.

[195] Since a method of fabricating the lens and a luminescent device with the lens are the same as the aforementioned embodiment, descriptions thereof will be omitted.

[196] A side illumination lens with a linear surface bent once and a curved surface extending therefrom, and a luminescent device with the lens according to a fifth embodiment of the present invention will be described below.

[197] In the following fifth embodiment, a description thereof overlapping with that of the aforementioned embodiment will be omitted. Further, since a description of a modification of a luminescent device with the lens overlaps with that of the aforementioned embodiment, the description will be omitted.

[198] <Embodiment 5>

[199] Fig. 41 is a conceptual sectional view of a luminescent device with a lens according to a fifth embodiment of the present invention, Fig. 42 is a perspective view of the lens according to the fifth embodiment, Fig. 43 is a conceptual view illustrating the operation of the total internal reflection lens according to the fifth embodiment, and Fig. 44 is a graph showing simulation results of the luminescent device according to the fifth embodiment.

[200] Referring to Figs. 41, 42 and 43, the lens of this embodiment comprises a first total reflection surface 4121 with a V-shaped section and a certain slope with respect to a central axis x; a second total reflection surface 4122 with a slope smaller than that of the first total reflection surface 4121; a linear first refractive surface 4123a extending downward from a periphery of the second total reflection surface 4122 in a direction parallel to the central axis x; a linear second refractive surface 4123b extending from a periphery of the first refractive surface 4123a in the direction perpendicular to the central axis x; and a curved third refractive surface 4123c extending downward from a periphery of the second refractive surface 4123b.

[201] As shown in Figs. 41 and 42, assuming that the diameter of the entire lens 4120 is 1, the maximum diameter of the first total reflection surface 4121 is 1/12 to 1/6, and

the maximum diameter of the second total reflection surface 4122 is 1/7 to 1/3. The maximum diameter of the second refractive surface 4123b is 1/6 to 2/3, and the width of the second refractive surface 4123b is 1/12 to 1/6 of the diameter of the lens 4120. The diameter of the third refractive surface 4123c is the same as the entire lens.

[202] Further, assuming that the height of the lens 4120 is 1, the height of the first total reflection surface 4121 is 1/4 to 3/4; the height of the second total reflection surface 4122 is 1/6 to 1/4; the height of the first refractive surface 4123a is 1/12 to 1/8; and the height of the third refractive surface 4123c is 7/8 to 11/12. Here, the third refractive surface 4123c is made in the form of an ellipse as shown in the figures, and a ratio of minor and major axes of the ellipse is in a range of 1:4 or less. That is, it may be a circle.

[203] Accordingly, as shown in Fig. 43, light R2 and R4, which is emitted from a light source (luminescent chip) and is then incident on the first and second total reflection surfaces 4121 and 4122, are totally reflected, and emerges in a y-axis direction through the refractive surfaces 4123a, 4123b and 4123c. Light R5, R3 and R1 incident on the first to third refractive surfaces 4123a, 4123b and 4123c are refracted and emerges in the y-axis direction.

[204] As such, the lens 120 of the present invention is formed to have the total reflection surfaces with different slopes at a central portion thereof, and the rounded surface and the plurality of horizontal and vertical surfaces at an edge thereof, so that a peak value of luminous intensity is in a range of ±10 with respect to ±70 as shown in Fig. 44.

[205] In Fig. 44, a lens 4120 with a refractive index of 1.5 was used such that an angle defined by the first total reflection surface 4121 and light emitted from the luminescent chip 4110 became about 50 degrees greater than a critical angle, and an angle defined by the second total reflection surface 4122 and light emitted from the luminescent chip 4110 became about 43 degrees. Then, luminous intensity is simulated in a range of +90 to -90 with respect to a region where the luminescent chip is located, and the results are shown in the graph.

[206] As shown in the graph of Fig. 44, the luminous intensity is the highest in the vicinity of ±70 degrees. That is, the luminous intensity is about 1.0 at +70 degrees and about 0.97 at -70 degrees. Further, the luminous intensity is not greater than 0.2 within ±40 degrees.

Claims

[1] 1. A lens, comprising: a body;
a total reflection surface with a total reflection slope with respect to a central axis of the body; and
a linear and/or curved refractive surface(s) formed to extend from a periphery of the total reflection surface.

[2] 2. The lens as claimed in claim 1, wherein the refractive surface comprises:
a linear refractive surface formed by being bent at the periphery of the total reflection surface; and
a curved refractive surface formed to extend from a periphery of the linear refractive surface.

[3] 3. The lens as claimed in claim 1, wherein the refractive surface comprises:
a curved refractive surface formed to extend from the periphery of the total reflection surface; and
a linear refractive surface formed by being bent at a periphery of the curved refractive surface.

[4] 4. The lens as claimed in any one of claims 1 to 3, wherein the curved refractive surface takes the shape of an ellipse, and a ratio of minor and major axes of the ellipse is 1:4 or less.

[5] 5. The lens as claimed in any one of claims 1 to 3, wherein the linear refractive surface is bent more than once.

[6] 6. The lens as claimed in claim 1, wherein the total reflection surface comprises:
a first total reflection surface having a section in the form of a V-shaped recess with a predetermined slope; and
a second total reflection surface extending upward from a periphery of the first total reflection surface and formed to be sloped with a gradient smaller than that of the first total reflection surface.

[7] 7. The lens as claimed in claim 1, wherein the refractive index of the body is 1.2 to 2.0.

[8] 8. A luminescent device, comprising:
a package housing with an opening and a through-hole exposed by the opening;
a lead terminal having an inner portion exposed within the opening of the package housing and an outer portion extending from the inner portion and protruding to the outside of the package housing;
a heat sink coupled to a lower portion of the package housing and having a portion exposed through the opening ; and
a lens including a total reflection surface encapsulating the package housing and

having a total reflection slope, and a refractive surface formed to extend from a periphery of the total reflection surface.

[9] 9. The luminescent device as claimed in claim 8, wherein the package housing comprises first and second housings mutually coupled to each other with the lead terminal interposed therebetween, and the opening is formed in the first housing.

[10] 10. The luminescent device as claimed in claim 8, wherein the heat sink comprises:

a heat sink body corresponding to a bottom surface of the package housing; and an insertion projection protruding upward from a central portion of the heat sink body and inserted into the through-hole of the package housing.

[11] 11. The luminescent device as claimed in claim 10, wherein the heat sink has a coupling projection on at least one of the heat sink body and the insertion projection.

[12] 12. A luminescent device, comprising:

a heat sink support ring;

a heat sink inserted into the support ring;

at least two lead terminals arranged at both sides of the support ring while being spaced apart from the support ring and the heat sink;

a package body for molding the heat sink and the lead terminals to support them, the package body having an opening through which an upper portion of the heat sink and portions of the lead terminals are exposed; and

a lens including a total reflection surface encapsulating the package body and having a total reflection slope, and a refractive surface formed to extend from a periphery edge of the total reflection surface.

[13] 13. The luminescent device as claimed in claim 12, wherein the heat sink has a base and a projection protruding upward from the base at the center thereof, and the projection is inserted into the support ring.

[14] 14. The luminescent device as claimed in claim 13, wherein the heat sink further comprises a support ring-receiving groove in a side surface of the projection so that the support ring-receiving groove can be fastened to the support ring.

[15] 15. The luminescent device as claimed in claim 12, wherein the package body is a plastic resin body formed by insert-molding a thermosetting or thermoplastic resin after the heat sink is inserted into the support ring.

[Fig. 1]

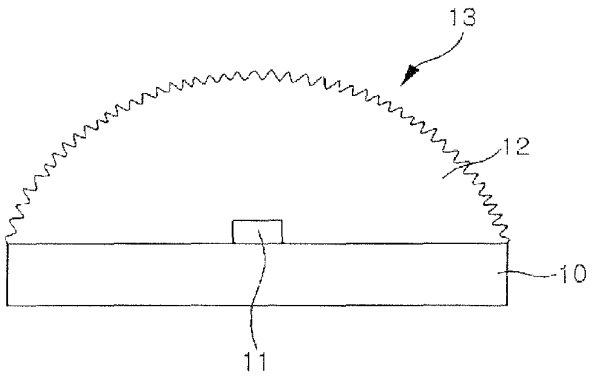

[Fig. 2]

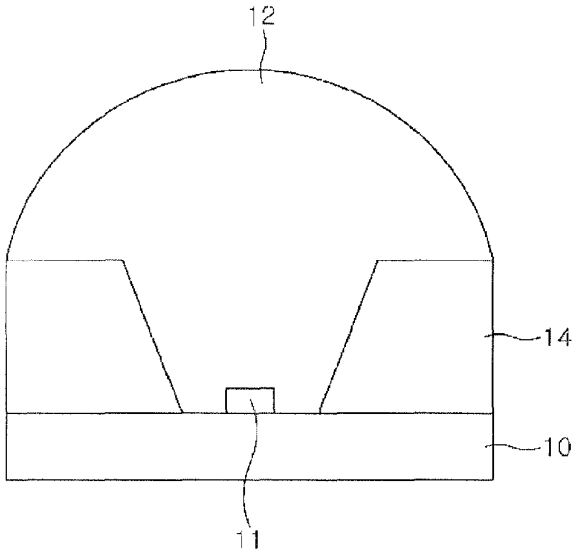

[Fig. 3]

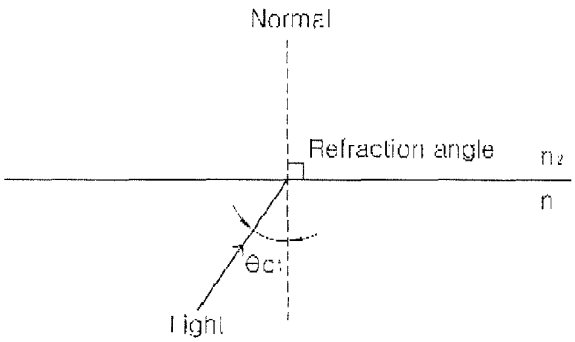
Normal
Refraction angle
n2
n
θc1
Light

(a)

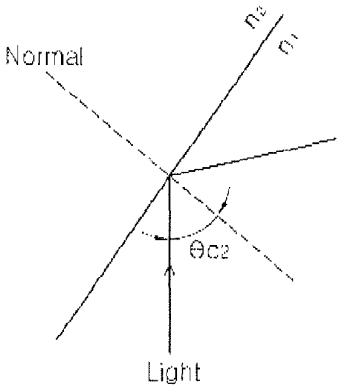
Normal
n2
n1
θc2
Light

(b)

[Fig. 4]

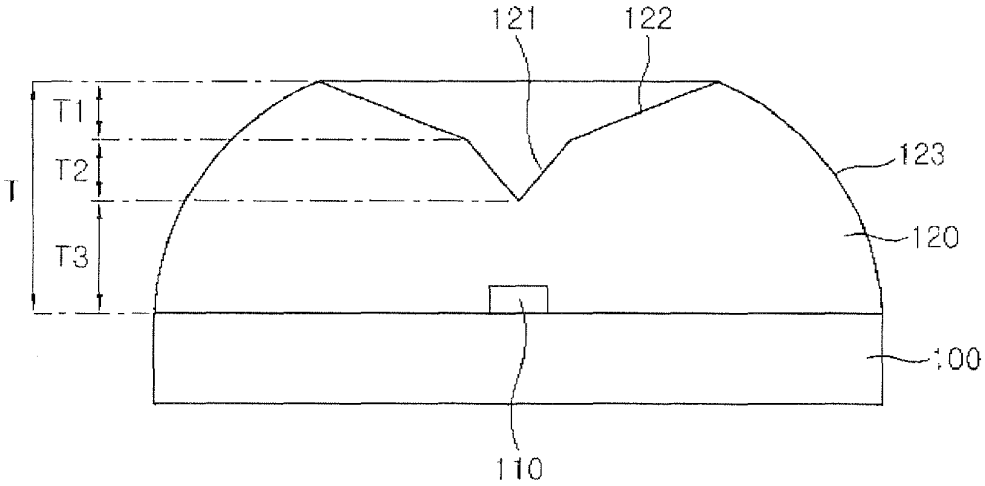
121
122
T1
T2
T
T3
123
120
100
110

[Fig. 5]

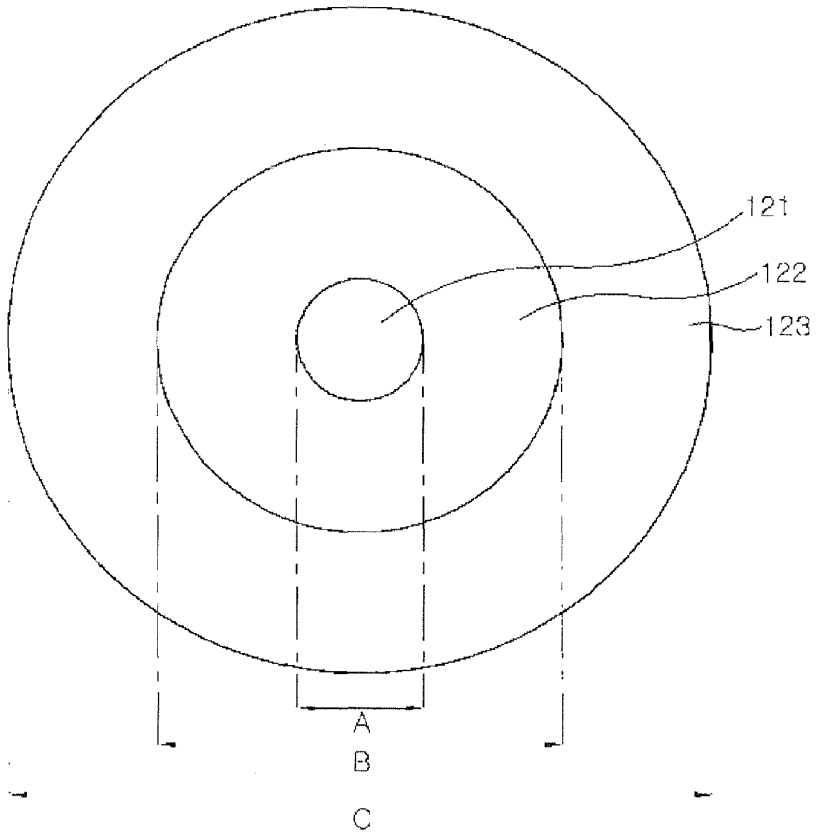

[Fig. 6]

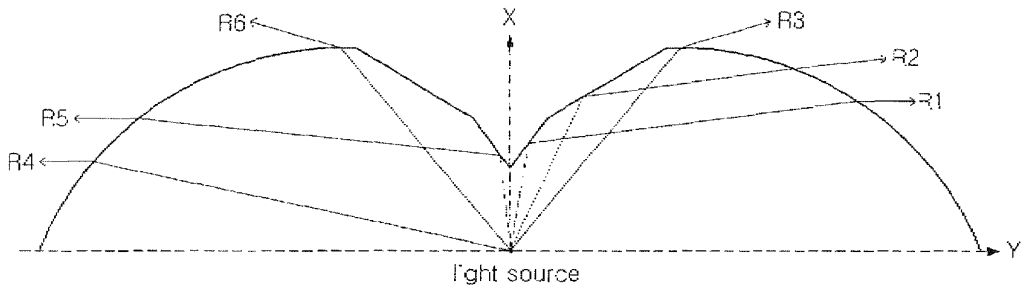

[Fig. 7]

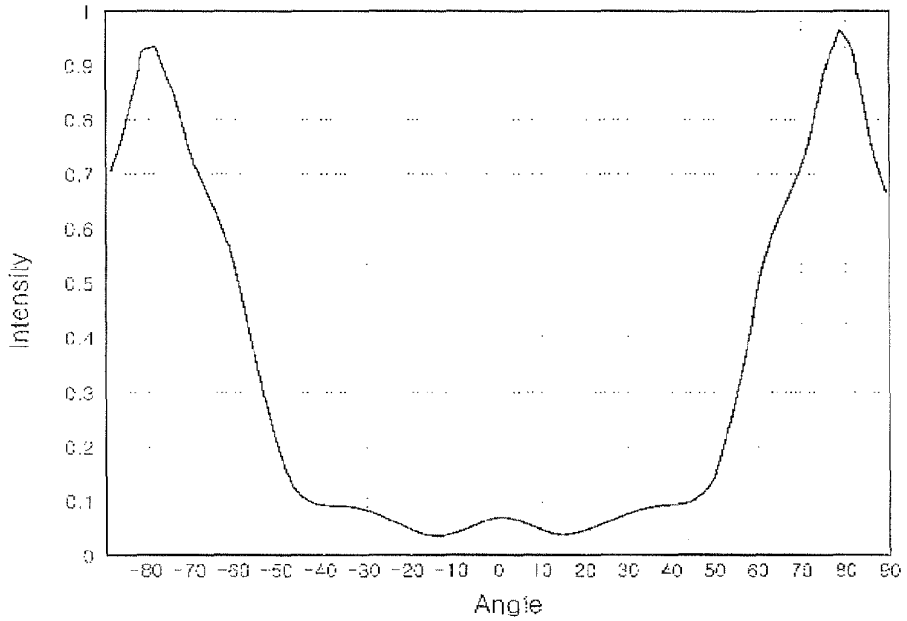

[Fig. 8]

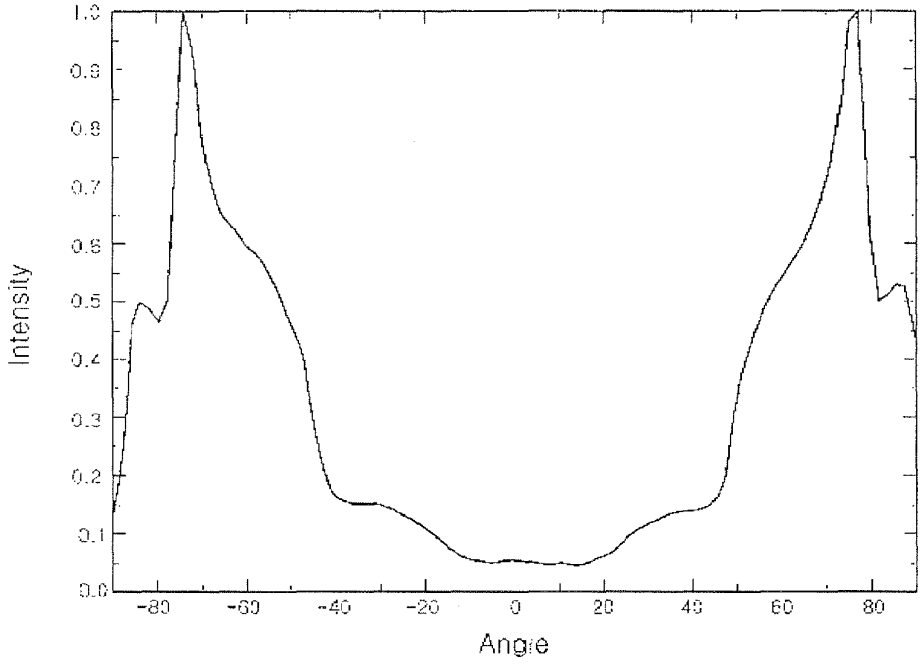

[Fig. 9]

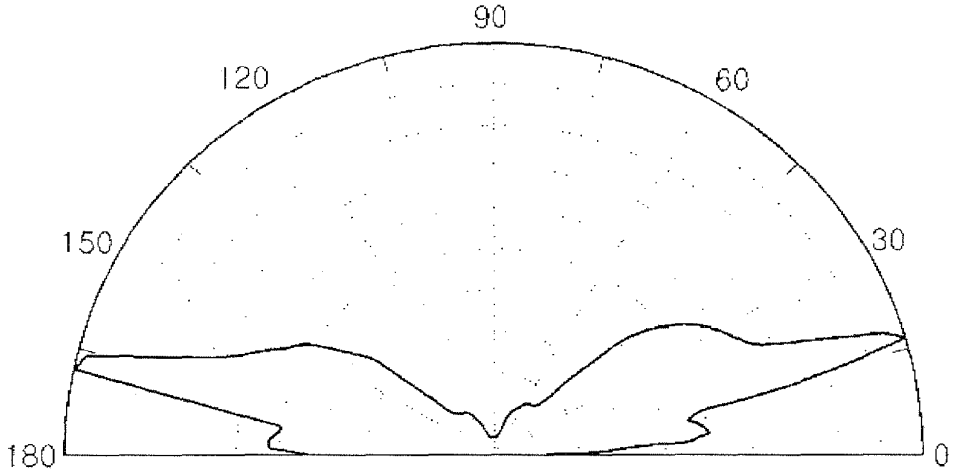

[Fig. 10]

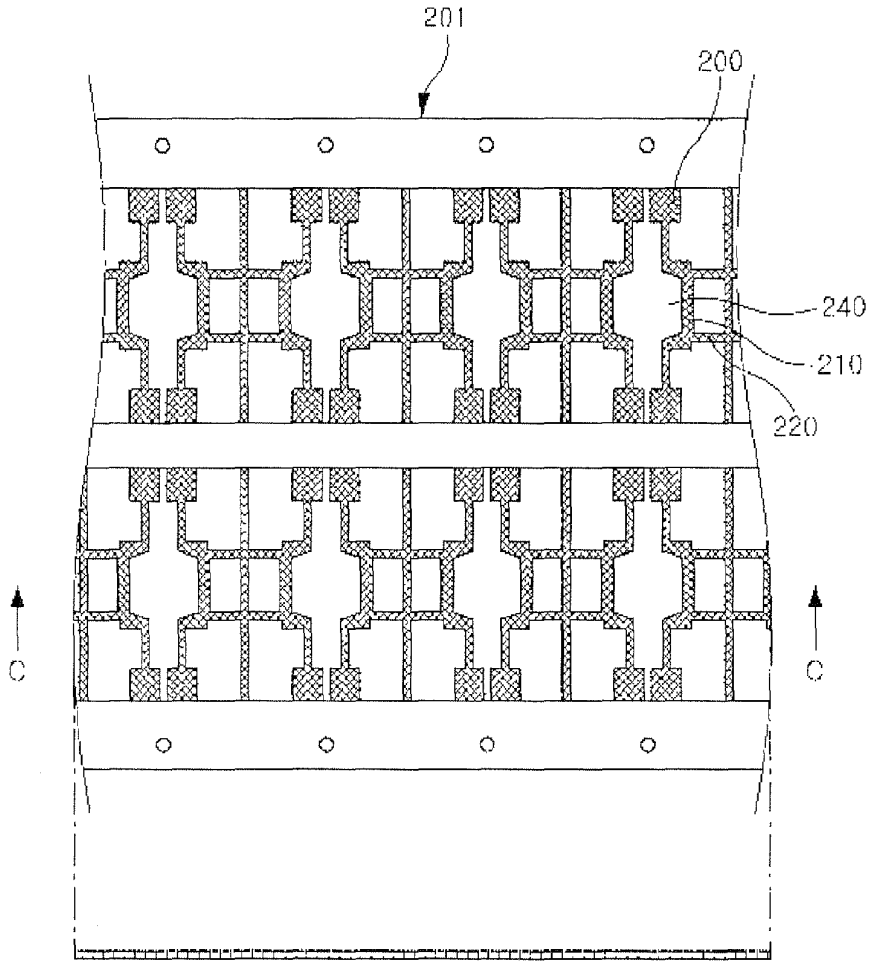

[Fig. 11]

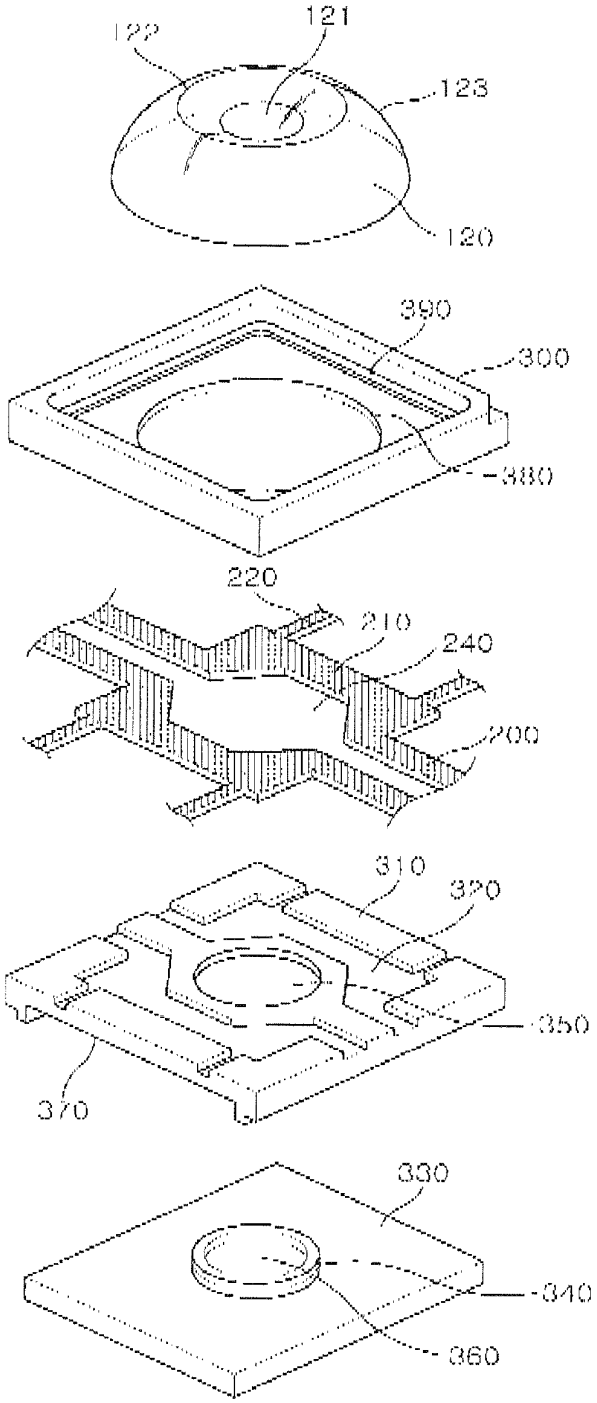
122
121
123
120
390
300
380
220
210
240
200
310
320
350
370
330
340
360

[Fig. 12]

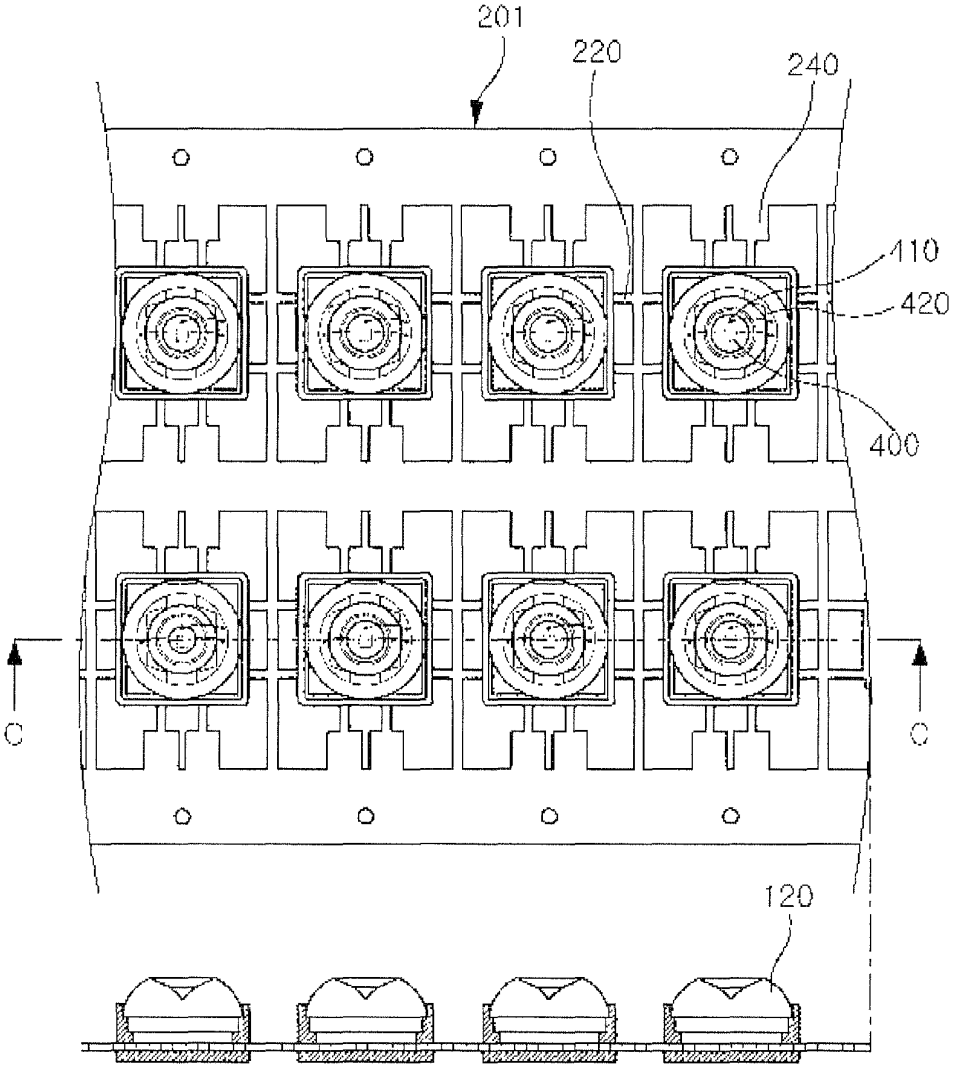

[Fig. 13]

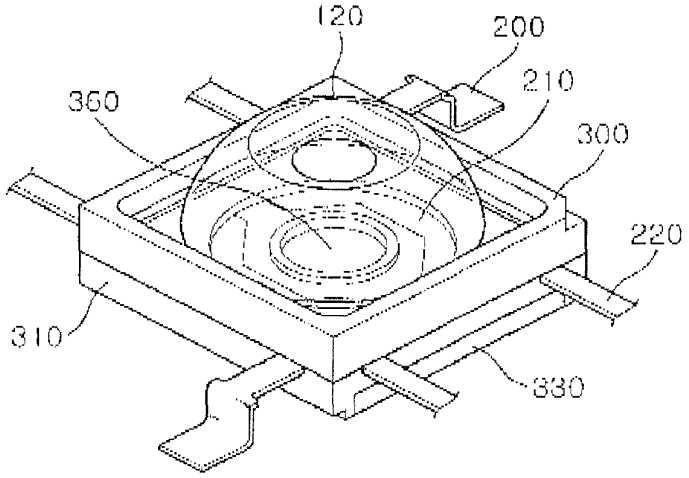

(a)

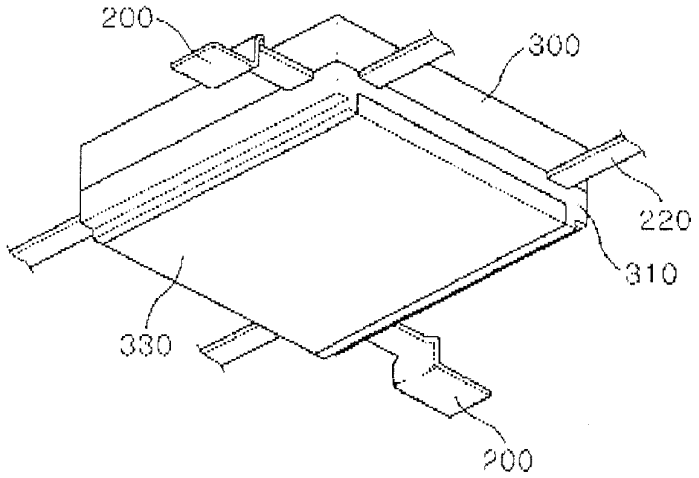

(b)

[Fig. 14]

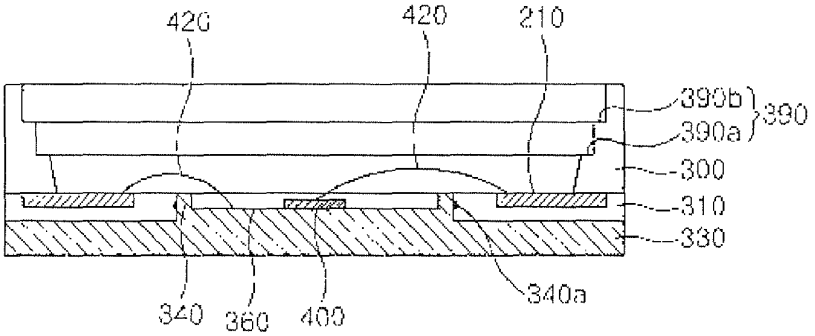
420
420
210
390b
390a
390
300
310
330
340
360
400
340a

(a)

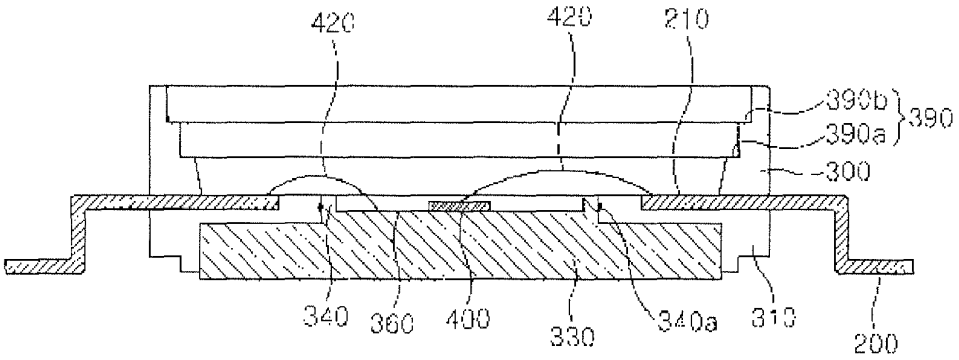
420
420
210
390b
390a
390
300
340
360
400
330
340a
310
200

(b)

[Fig. 15]

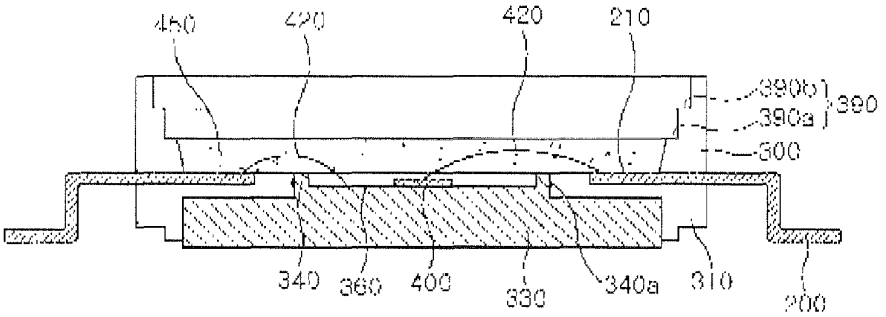
450
420
420
210
390b
390a
390
300
340
360
400
330
340a
310
200

(a)

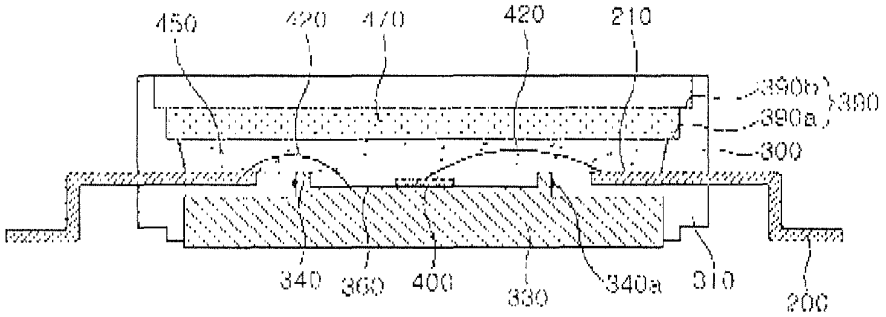
450
420
470
420
210
390b
390a
390
300
340
360
400
330
340a
310
200

(b)

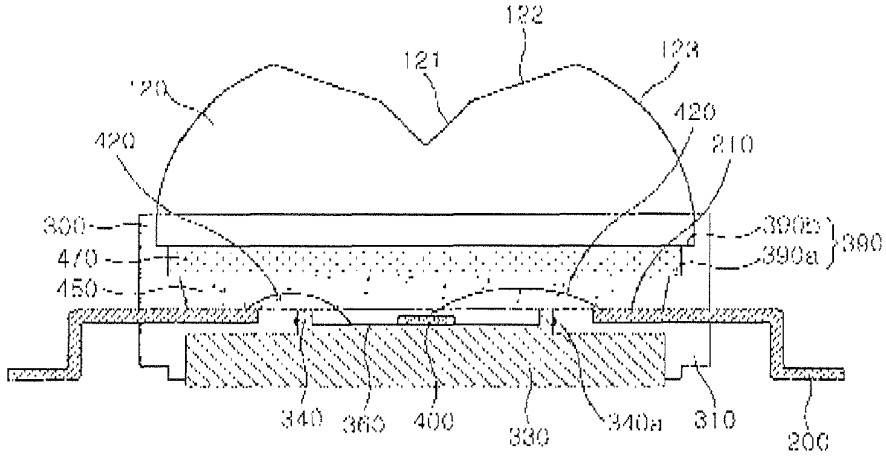
122
121
123
120
420
420
210
300
470
450
390b
390a
390
340
360
400
330
340a
310
200

(c)

[Fig. 16]

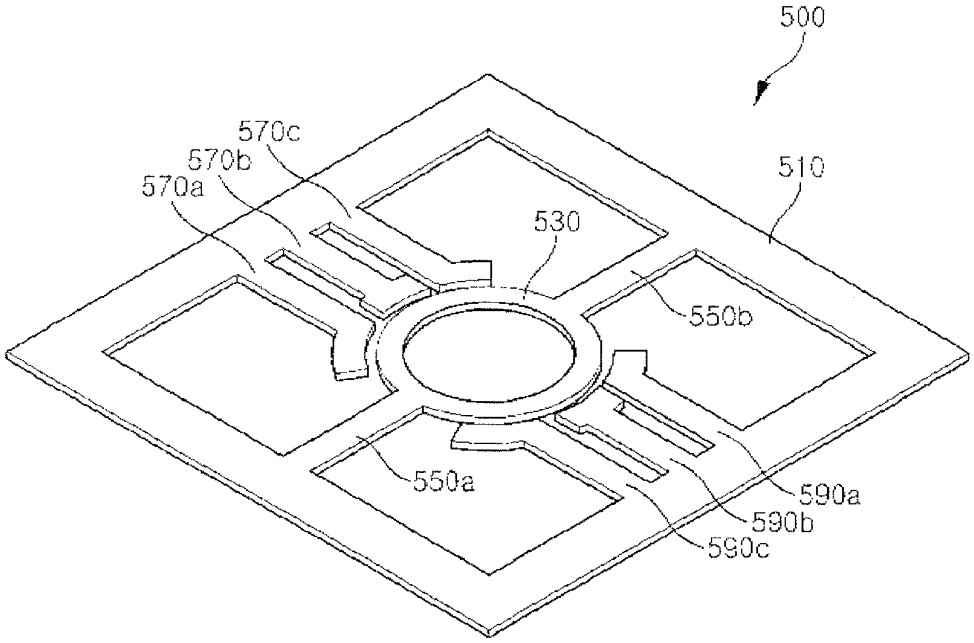

[Fig. 17]

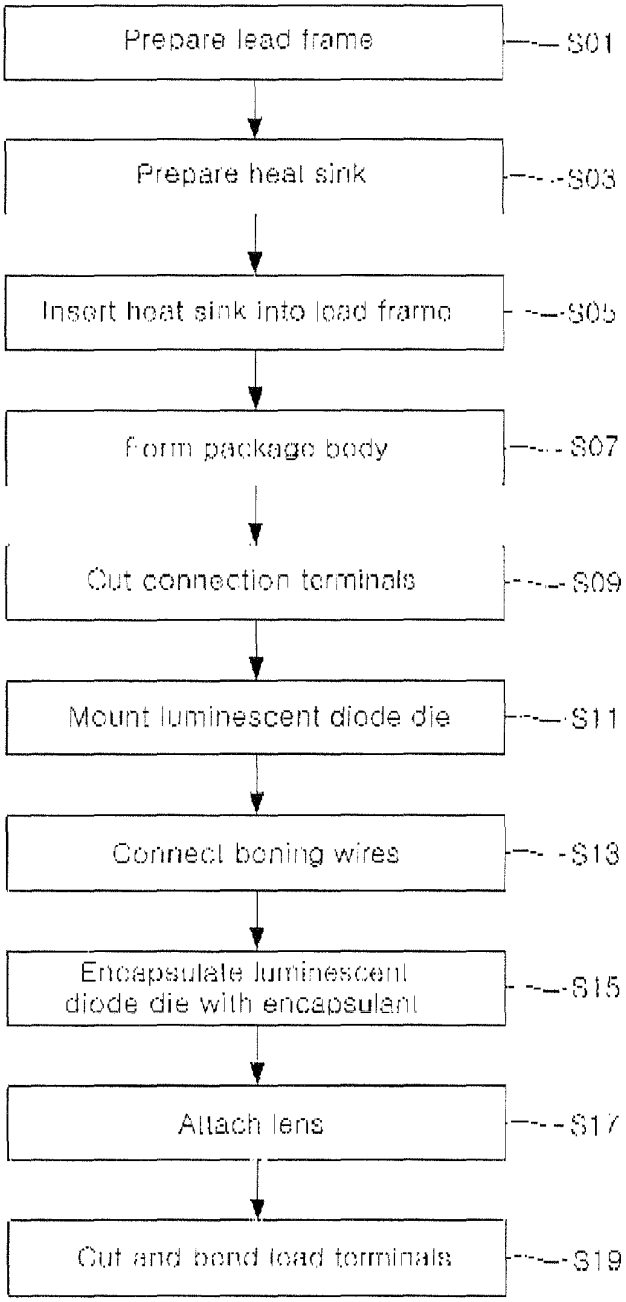
Prepare lead frame
S01
Prepare heat sink
S03
Insert heat sink into lead frame
S05
Form package body
S07
Cut connection terminals
S09
Mount luminescent diode die
S11
Connect boning wires
S13
Encapsulate luminescent diode die with encapsulant
S15
Attach lens
S17
Cut and bend lead terminals
S19

[Fig. 18]

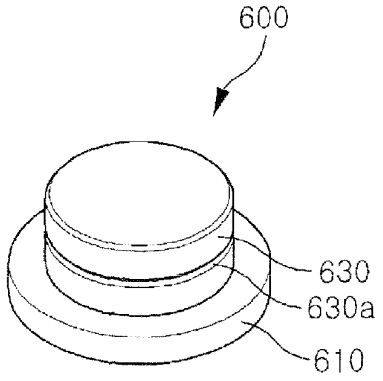
600
630
630a
610

[Fig. 19]

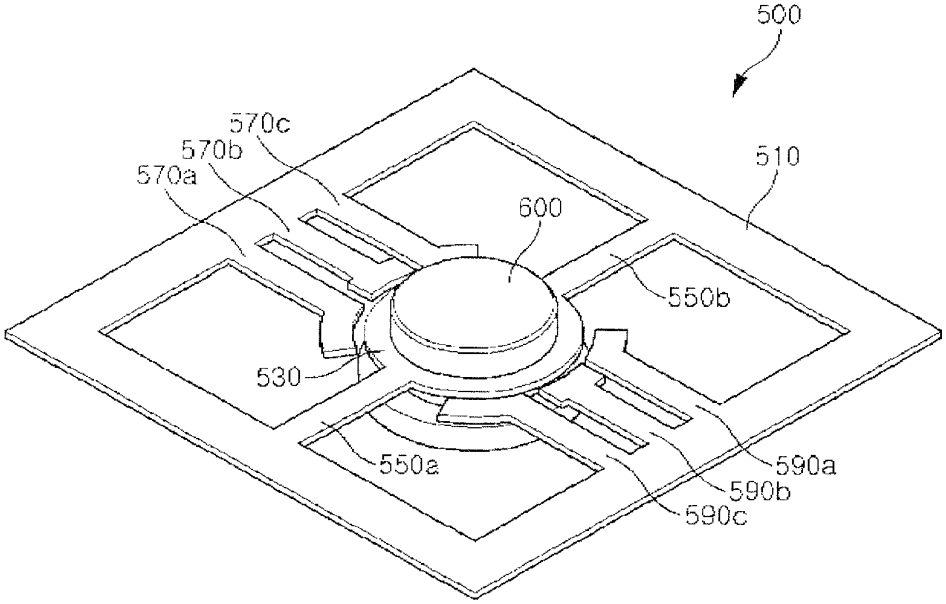
500
570c
570b
570a
510
600
550b
530
550a
590a
590b
590c

[Fig. 20]

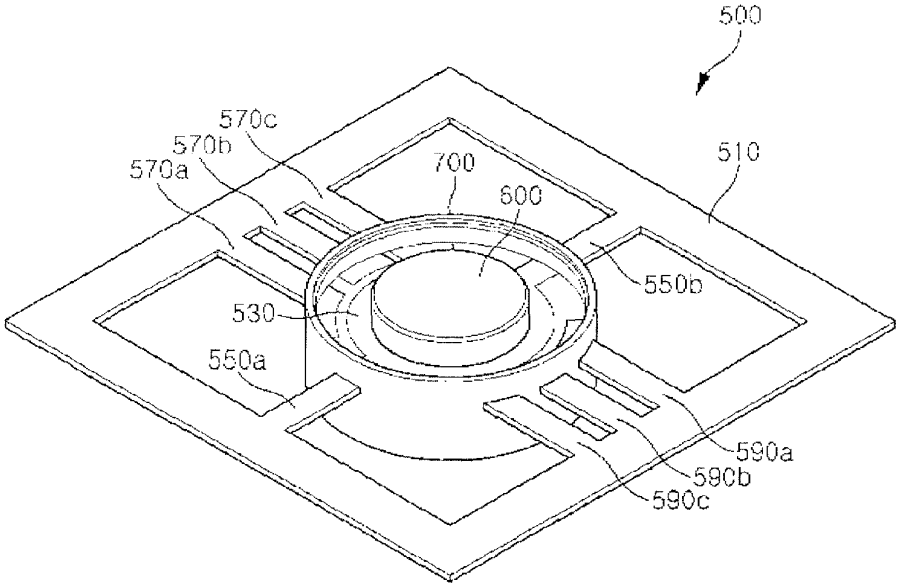
500
570c
570b
570a
700
600
510
550b
530
550a
590a
590b
590c

[Fig. 21]

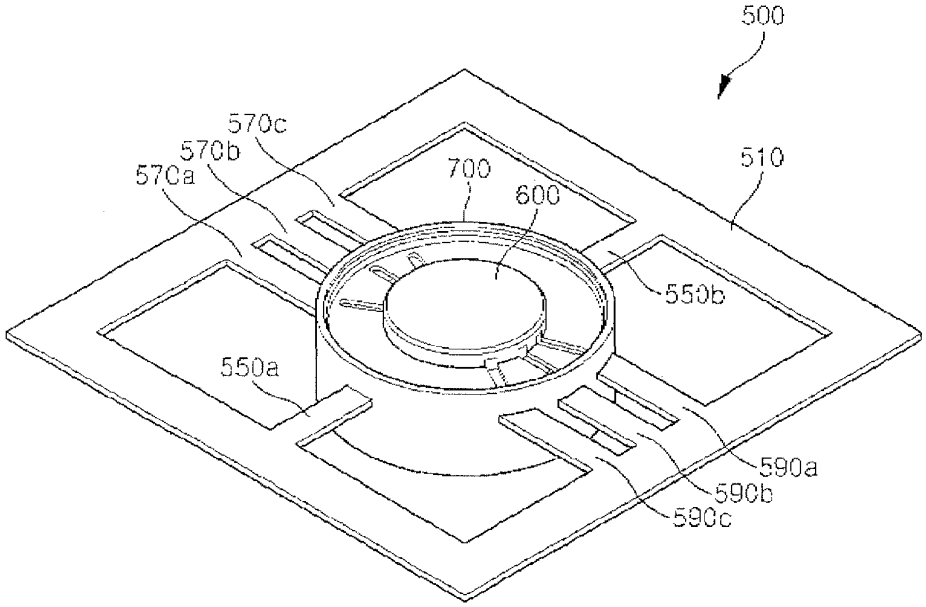
500
570c
570b
570a
700
600
510
550b
550a
590a
590b
590c

[Fig. 22]

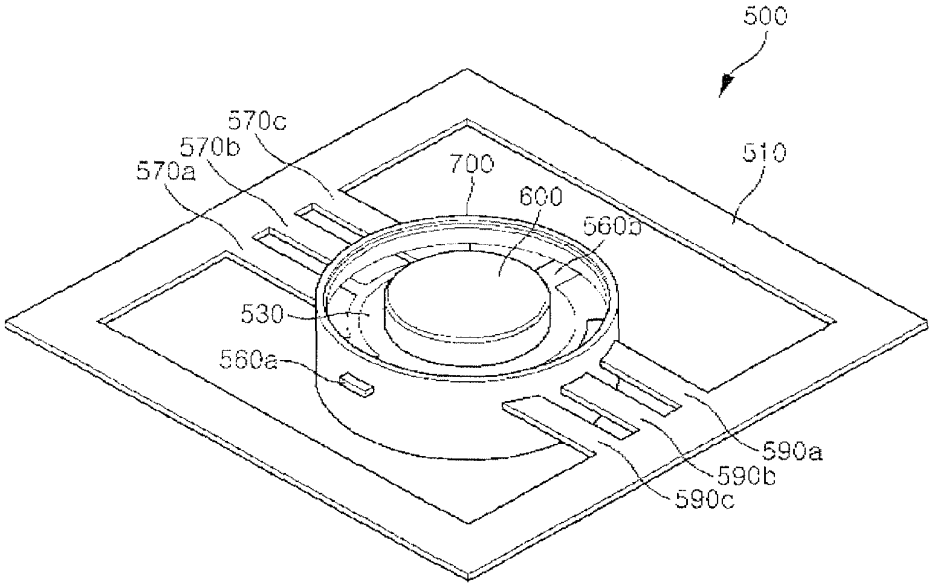
500
570c
570b
570a
700
600
560b
510
530
560a
590a
590b
590c

[Fig. 23]

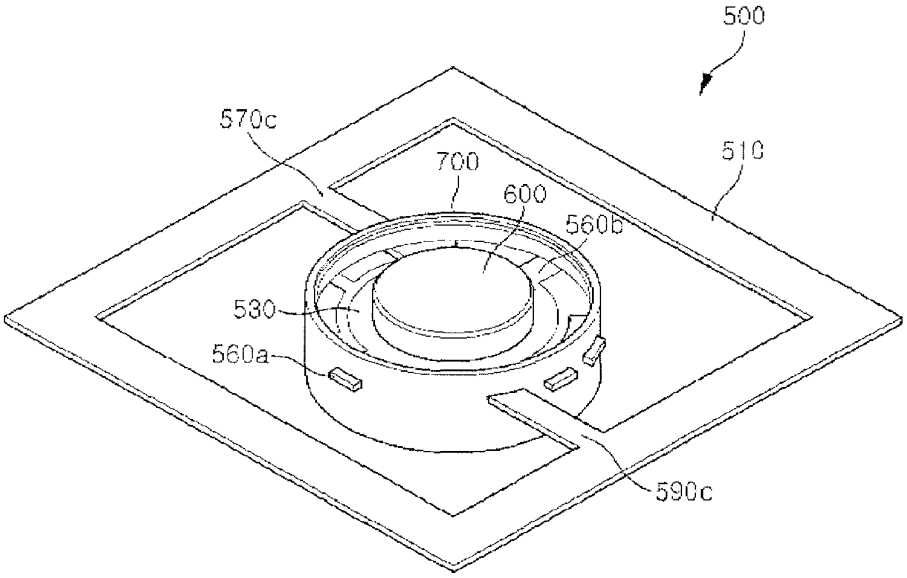
500
570c
700
600
560b
510
530
560a
590c

[Fig. 24]

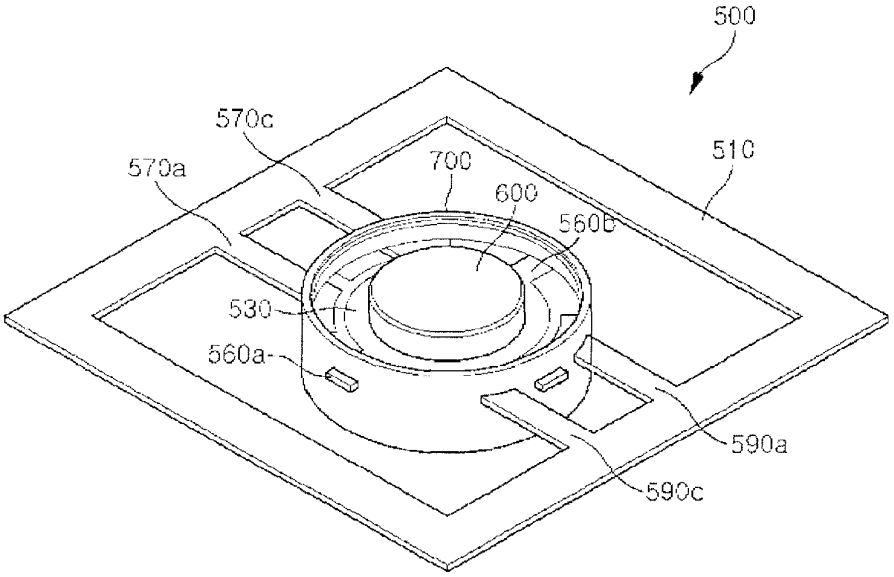
500
570c
570a
700
600
560b
510
530
560a
590a
590c

[Fig. 25]

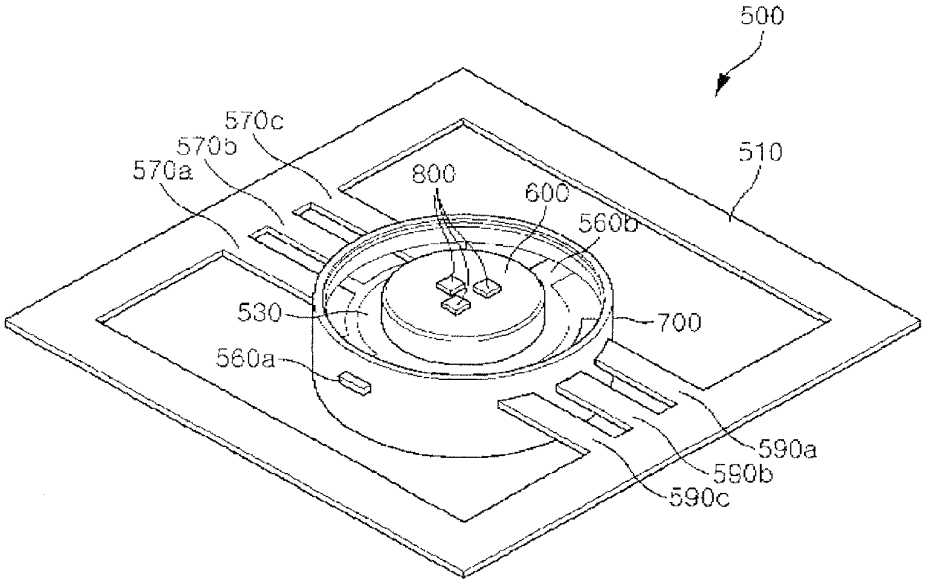
500
570c
570b
570a
800
600
560b
510
530
700
560a
590a
590b
590c

[Fig. 26]

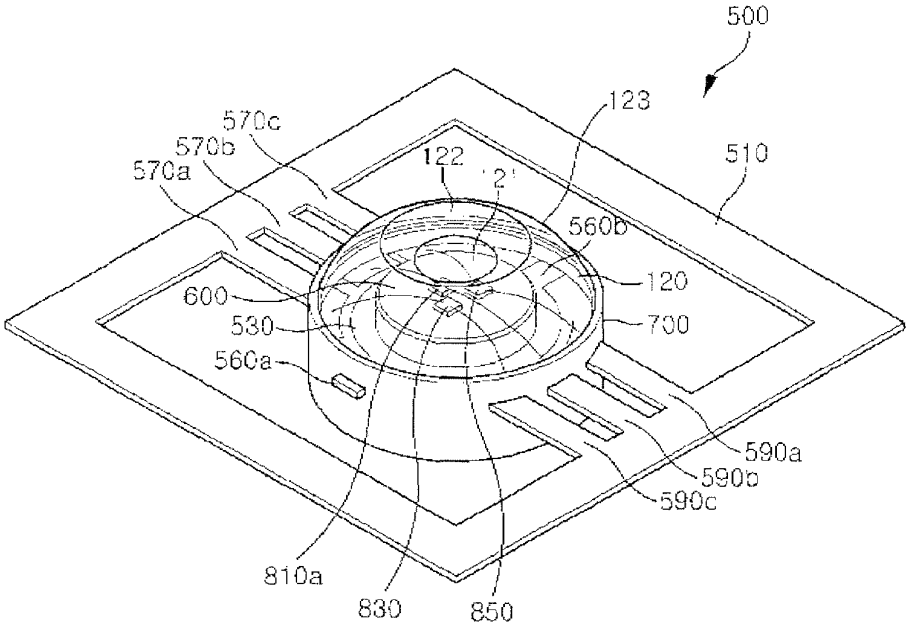
500
123
570c
570b
570a
122
'2'
510
560b
120
600
530
700
560a
590a
590b
590c
810a
830
850

[Fig. 27]

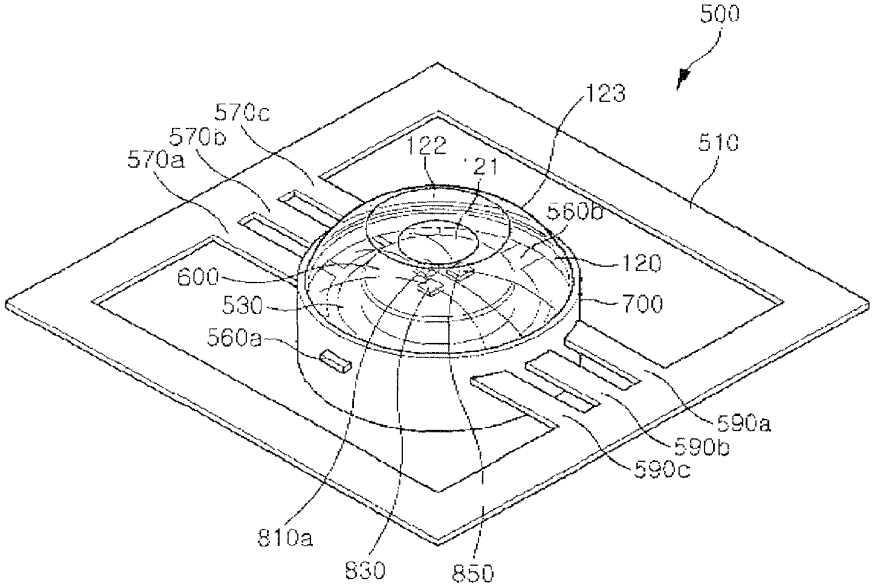
500
123
570c
570b
570a
122
'21
510
560b
120
600
530
700
560a
590a
590b
590c
810a
830
850

[Fig. 28]

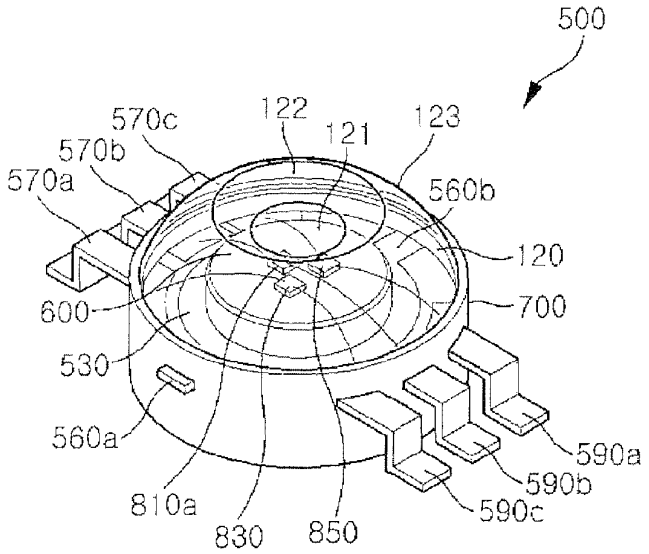

[Fig. 29]

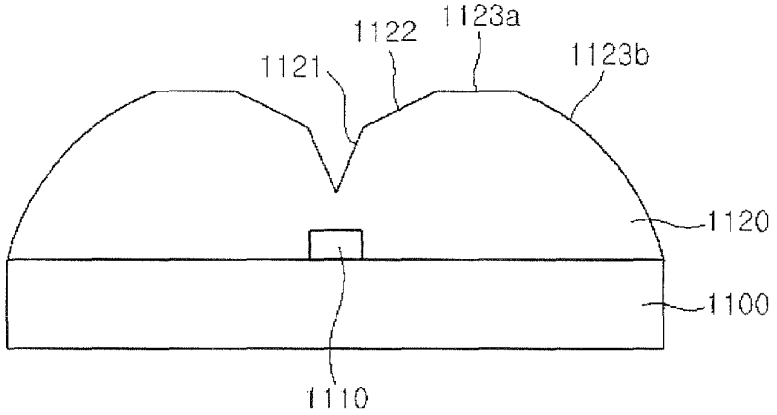

[Fig. 30]

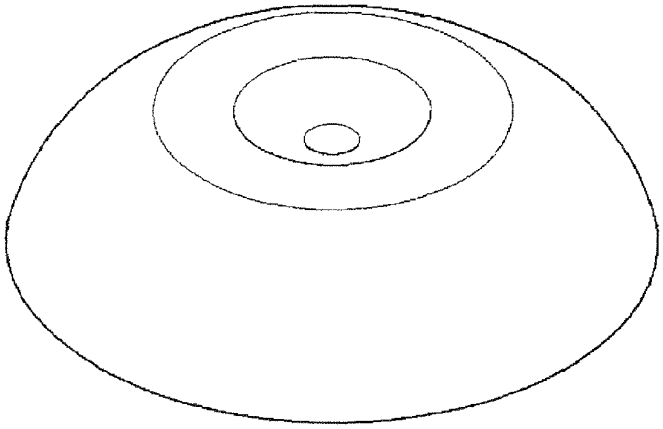

[Fig. 31]

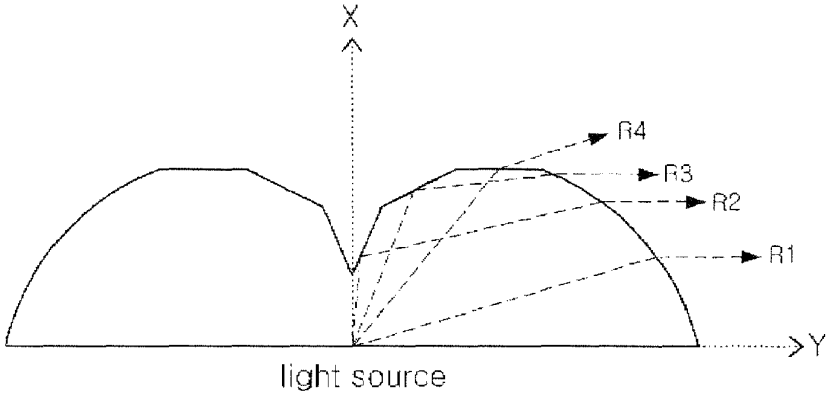
X
R4
R3
R2
R1
Y
light source

[Fig. 32]

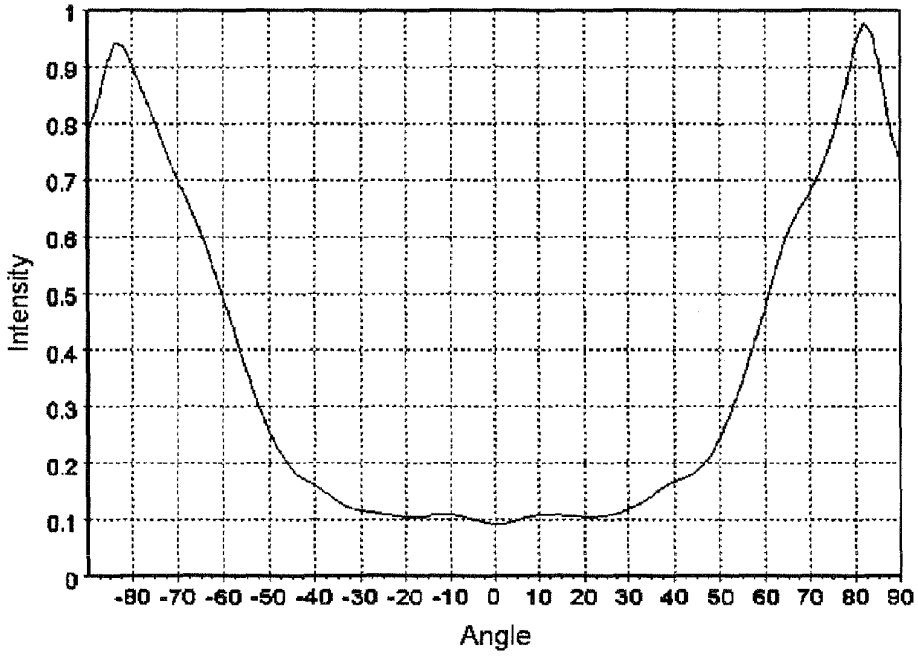
Intensity
1
0.9
0.8
0.7
0.6
0.5
0.4
0.3
0.2
0.1
0
-80 -70 -60 -50 -40 -30 -20 -10 0 10 20 30 40 50 60 70 80 90
Angle

[Fig. 33]

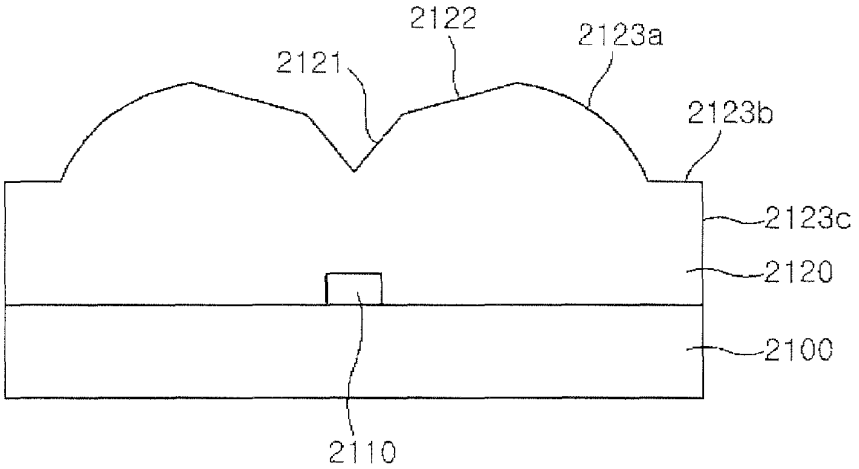

[Fig. 34]

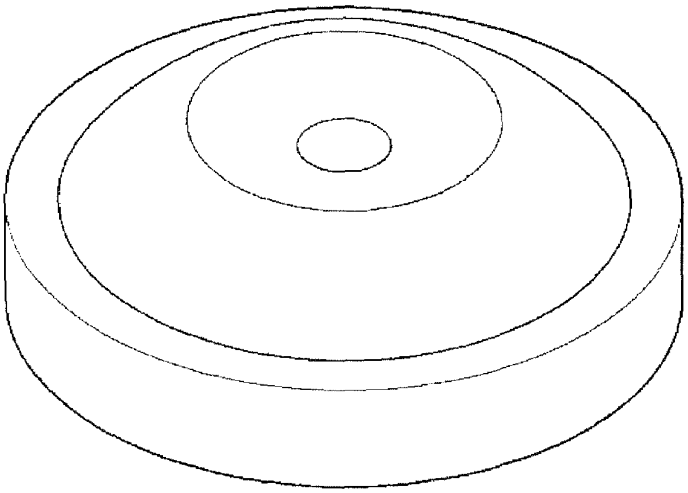

[Fig. 35]

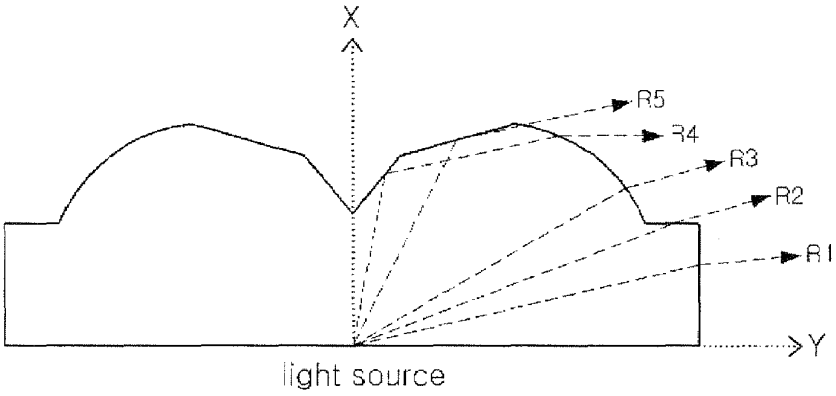

[Fig. 36]

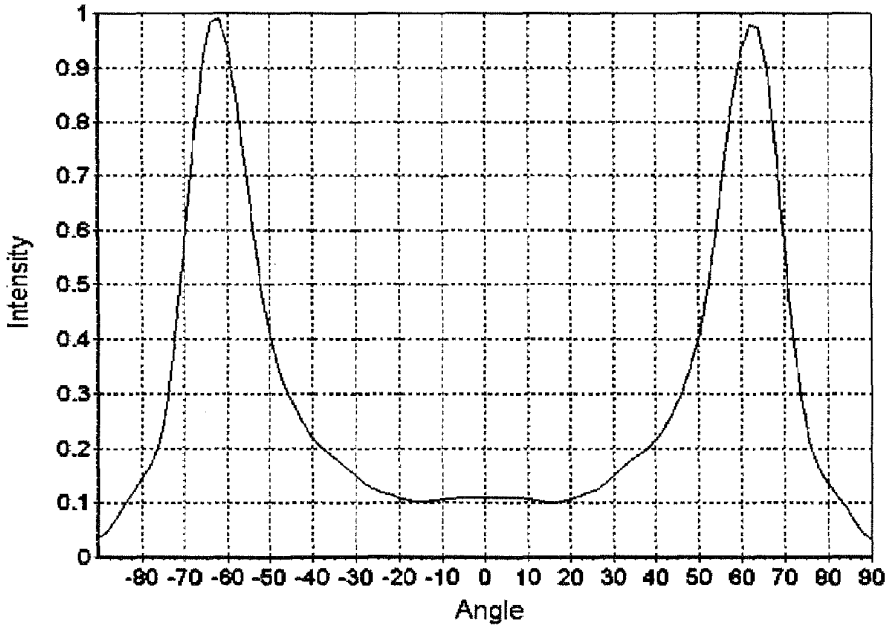
Intensity
1
0.9
0.8
0.7
0.6
0.5
0.4
0.3
0.2
0.1
0
-90 -70 -60 -50 -40 -30 -20 -10 0 10 20 30 40 50 60 70 80 90
Angle

[Fig. 37]

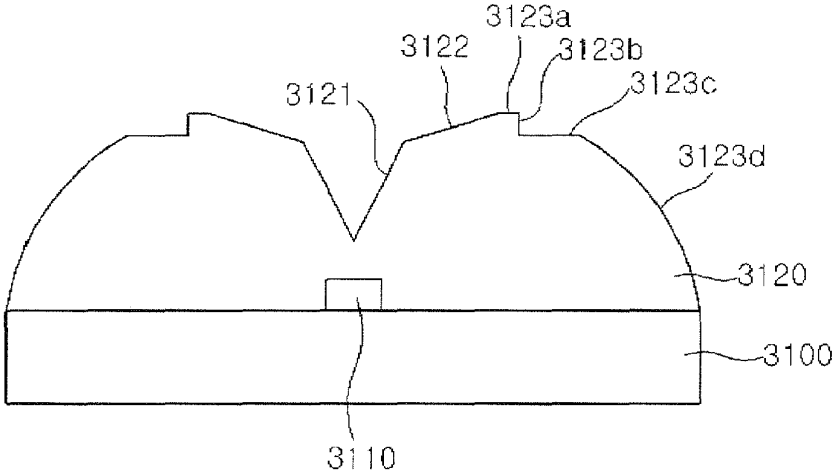
3123a
3122
3123b
3123c
3121
3123d
3120
3100
3110

[Fig. 38]

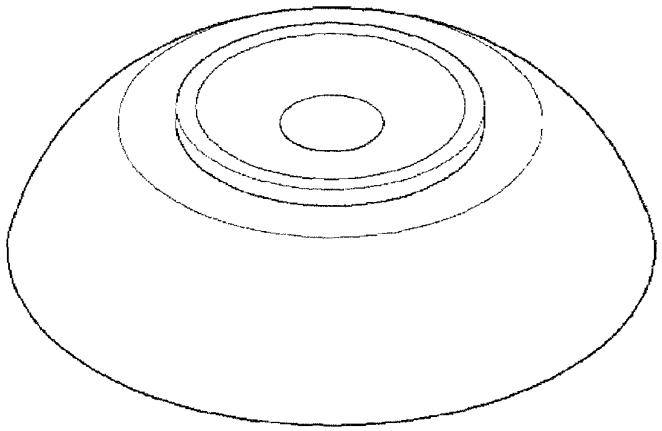

[Fig. 39]

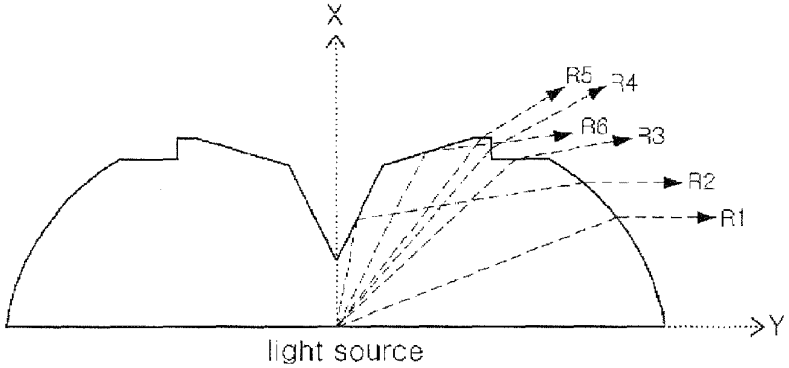

[Fig. 40]

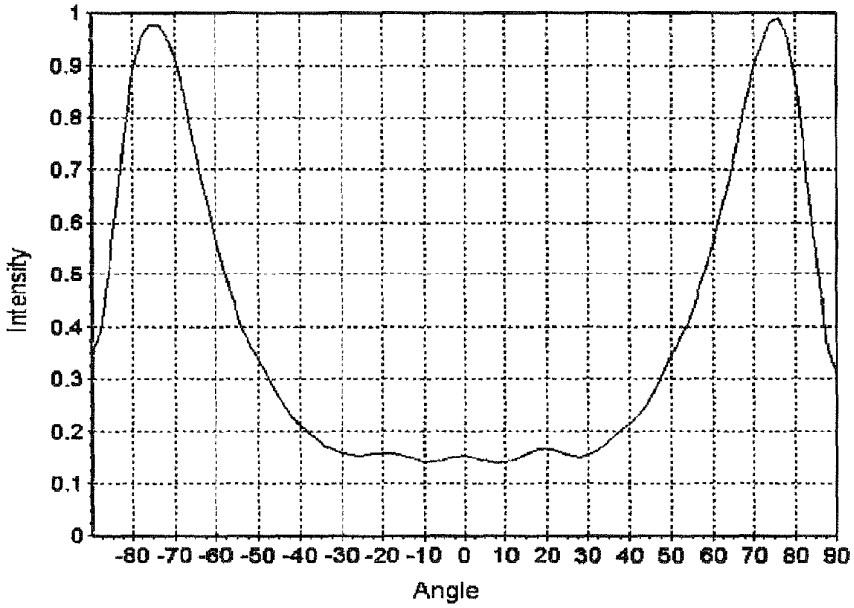

[Fig. 41]

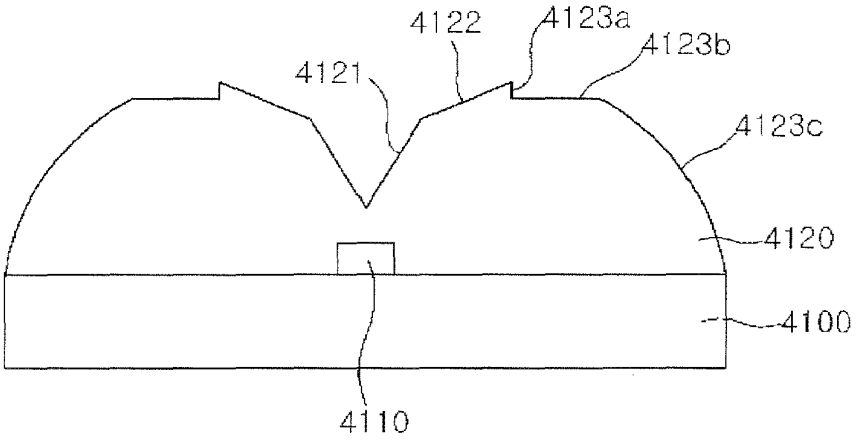

[Fig. 42]

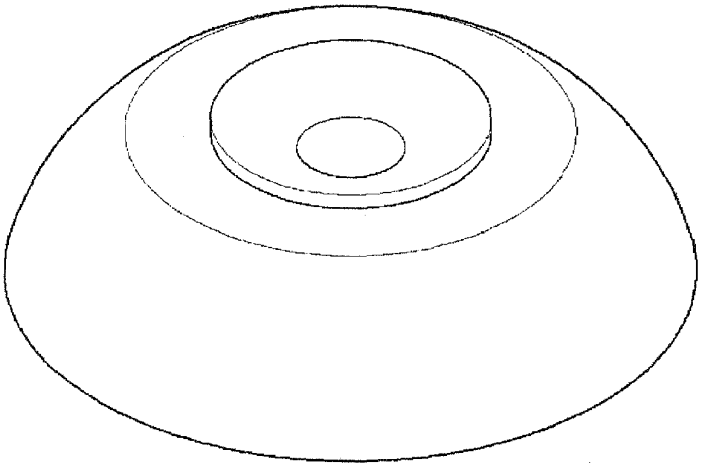

[Fig. 43]

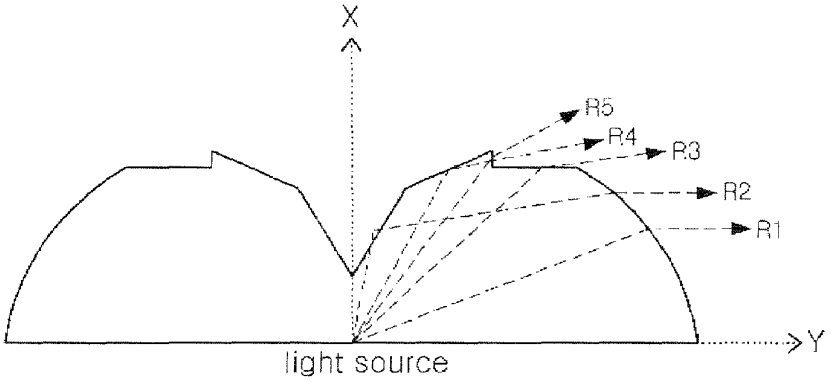

[Fig. 44]

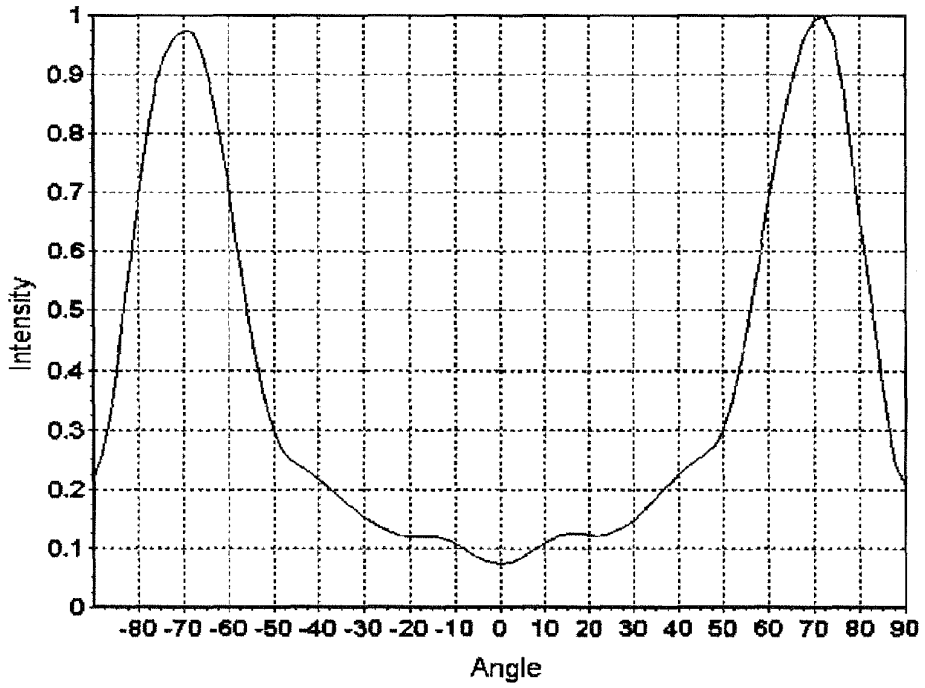
Intensity
1
0.9
0.8
0.7
0.6
0.5
0.4
0.3
0.2
0.1
0
-80 -70 -60 -50 -40 -30 -20 -10 0 10 20 30 40 50 60 70 80 90
Angle

INTERNATIONAL SEARCH REPORT

International application No.
PCT/KR2005/003346

A. CLASSIFICATION OF SUBJECT MATTER

H01L 33/00(2006.01)i

According to International Patent Classification (IPC) or to both national classification and IPC

B. FIELDS SEARCHED

Minimum documentation searched (classification system followed by classification symbols)

IPC 8 H01L 23 H01L 33 F21V G02B G01J

Documentation searched other than minimum documentation to the extent that such documents are included in the fields searched

Korean Patents and applications for inventions since 1975
Korean Utility models and applictions for Utility models since 1975
Japanese Utility models and application for Utility models since 1975

Electronic data base consulted during the internationnal search (name of data base and, where practicable, search terms used)

e-KIPASS : "ITR", "lens", "LED", "reflect"

C. DOCUMENTS CONSIDERED TO BE RELEVANT

Category*	Citation of document, with indication, where appropriate, of the relevant passages	Relevant to claim No.
D, Y A	US 6598998 B2 (LUMILEDS LIGHTING, U.S., LLC) 9 JULY 2003 see column 3 line 21 ~ column 5 line 30, figure 5F	1, 5-7, 8-11 2-4, 12-15
Y A	US 2002/0044454 A1 (PHILLIP C. ROLLER et. al.) 18 APRIL 2002 see the abstract, [0013], [0026], [0029], figures 3 & 5	1, 5-7 2-4, 8-11, 12-15
Y A	US 6274924 B1 (LUMILEDS LIGHTING, U.S., LLC) 14 AUGUST 2001 see the abstract, figure 2, full text	8-11 1-7, 12-15
A	JP 6-201996 A (NIPPON HIKYUMEN LENS K. K.) 22 JULY 1994 see the abstract, claim 1, figures 1-3	1-7
A	JP 2004-221598 A (LUMILEDS LIGHTING, U.S., LLC) 5 AUGUST 2004 see figures 1A, 1B	1-15

☐ Further documents are listed in the continuation of Box C. ☒ See patent family annex.

* Special categories of cited documents:
"A" document defining the general state of the art which is not considered to be of particular relevance
"E" earlier application or patent but published on or after the international filing date
"L" document which may throw doubts on priority claim(s) or which is cited to establish the publication date of citation or other special reason (as specified)
"O" document referring to an oral disclosure, use, exhibition or other means
"P" document published prior to the international filing date but later than the priority date claimed
"T" later document published after the international filing date or priority date and not in conflict with the application but cited to understand the principle or theory underlying the invention
"X" document of particular relevance; the claimed invention cannot be considered novel or cannot be considered to involve an inventive step when the document is taken alone
"Y" document of particular relevance; the claimed invention cannot be considered to involve an inventive step when the document is combined with one or more other such documents,such combination being obvious to a person skilled in the art
"&" document member of the same patent family

Date of the actual completion of the international search	Date of mailing of the international search report
13 JANUARY 2006 (13.01.2006)	**13 JANUARY 2006 (13.01.2006)**
Name and mailing address of the ISA/KR Korean Intellectual Property Office 920 Dunsan-dong, Seo-gu, Daejeon 302-701, Republic of Korea Facsimile No. 82-42-472-7140	Authorized officer KIM, Dong Yup Telephone No. 82-42-481-5749

Form PCT/ISA/210 (second sheet) (April 2005)

INTERNATIONAL SEARCH REPORT

Information on patent family members

International application No.
PCT/KR2005/003346

Patent document cited in search report	Publication date	Patent family member(s)	Publication date
US 6598998 B2	29.07.2003	EP 1255306 A2	06.11.2002
		JP 2003008081 A2	10.01.2003
		TW 541726 B	11.07.2003
		US 20020163810 A1	07.11.2002
US 2002/0044454 A1	18.04.2002	US 6623150 BB	23.09.2003
US 6274924 B1	14.08.2001	DE 19945675 A1	18.05.2000
		GB 2343548 A	10.05.2000
		GB 9925972 A0	29.12.1999
		JP 2000150967 A2	30.05.2000
		KR 1020000035156 A	26.06.2000
		TW 441045 B	16.06.2001
JP 6-201996 A	22.07.1994	NONE	
JP 2004-221598 A	05.08.2004	EP 1439587 A1	21.07.2004
		US 20040140543 A1	22.07.2004

PATENT APPLICATION
Attorney's Doc. No.: 3576-043
Client Ref. No.: PO070028

IN THE UNITED STATES PATENT AND TRADEMARK OFFICE

In re application of:	Do-Hyung KIM, et al.		
Serial No.:	Not yet assigned	Group Art Unit:	Not yet assigned
Filed:	April 6, 2007	Examiner:	Not yet assigned
For:	SIDE-LUMINESCENCE LENS AND LUMINESCENT DEVICE USING THE SAME		

INFORMATION DISCLOSURE CITATION
FORM PTO-1449 (Modified)

U.S. PATENT DOCUMENTS

Exam Init	Ref	Document Number	Issue Date	Name	Class	Sub Class
_____	_____	6,274,924	Aug. 14, 01	Carey et al.		
_____	_____	6,598,998	Jul. 29, 03	West et al.		
_____	_____	6,607,286	Aug. 19, 03	West et al.		
_____	_____	6,679,621	Jan. 20, 04	West et al.		
_____	_____	2002/0044454	Apr. 18, 02	Roller et al.		

FOREIGN PATENT DOCUMENTS

Exam Init	Ref	Document Number	Publication Date	Country	Name
_____	_____	6-201996	Jul. 22, 94	Japan	Kitagawa Seiichiro
_____	_____	2004-221598	Aug. 5, 04	Japan	Elpedes Cresente S. et al.

OTHER DOCUMENTS

Exam Init	Ref	Author, Title, Date, Pertinent Pages, etc.
_____	_____	English language abstract of Japanese Publication No. 6-201996
_____	_____	English language abstract of Japanese Publication No. 2004-221598

Examiner: _____

Date Considered: _____

WIDE ANGLE CONDENSING LENS

Publication number: JP6201996
Publication date: 1994-07-22
Inventor: KITAGAWA SEIICHIRO
Applicant: NIPPON HIKYUMEN LENS KK
Classification:
- International: ***G01J1/02; G01J1/04; G01V8/14; G02B3/00; G02B13/14; G02B17/08;*** **G01J1/02; G01J1/04; G01V8/12; G02B3/00; G02B13/14; G02B17/08;** (IPC1-7): G02B17/08; G01J1/02; G01J1/04; G01V9/04; G02B3/00; G02B13/14
- European:
Application number: JP19920348482 19921228
Priority number(s): JP19920348482 19921228

Report a data error here

Abstract of **JP6201996**

PURPOSE:To provide the wide angle condensing lens which can condense efficiently even an external light from the side of the lens. CONSTITUTION:In front of the lens, a wide angle lines part 12 and a concave part 14 are formed. On the lens side boundary surface of the concve part 14, a first total reflection surface 16 is formed, and by this total reflection surface 16, a first external light L2 in mainly the horizontal direction of the wide angle lens part 12 is subjected to total refection in the optical axis C direction of the wide angle lens part 12. On the lens side boundary surface of the rear part of the lens, second total reflection surface 20 is formed. A second external light L5 which intrudes in the oblique direction to the wide angle lens part 12 and passes through an area extending from an end part of a first total reflection surface 16 to a second total reflection surface 20 is subjected to total reflection toward a first total reflection surface 16 by a second total reflection surface 20, and also, subjected to total reflection again in the optical axis C direction by a first total reflection surface 16.

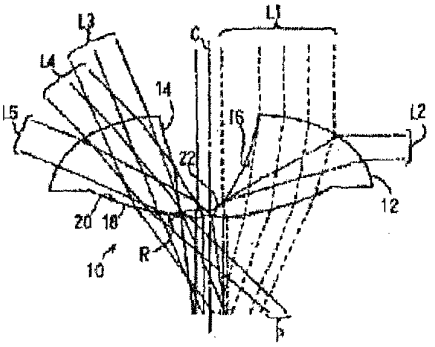

Data supplied from the ***esp@cenet*** database - Worldwide

(19)日本国特許庁（ＪＰ）　(12) 公開特許公報（Ａ）　(11)特許出願公開番号

特開平6－201996

(43)公開日　平成６年(1994)７月22日

(51)Int.Cl.⁵		識別記号	庁内整理番号	ＦＩ	技術表示箇所
Ｇ０２Ｂ	17/08	Ｚ	9120－2K		
Ｇ０１Ｊ	1/02	Ｗ	7381－2G		
	1/04	Ａ	7381－2G		
Ｇ０１Ｖ	9/04	Ｃ	9216－2G		
Ｇ０２Ｂ	3/00	Ｚ	8106－2K		

審査請求　未請求　請求項の数１　（全　４　頁）　最終頁に続く

(21)出願番号　特願平4－348482

(22)出願日　平成４年(1992)12月28日

(71)出願人　591225327
日本非球面レンズ株式会社
大阪府大阪市東淀川区南江口３丁目２番30号

(72)発明者　北川　清一郎
大阪府大阪市東淀川区南江口３丁目２番30号

(74)代理人　弁理士　江原　省吾　（外２名）

(54)【発明の名称】　広角集光レンズ

(57)【要約】

【目的】　レンズ側方からの外来光も効率的に集光することができる広角集光レンズを提供することである。

【構成】　レンズの前部に広角レンズ部１２と凹部１４を形成する。凹部１４のレンズ側界面に第１全反射面１６を形成し、この全反射面１６で広角レンズ部１２の主として横方向からの第１外来光Ｌ２を広角レンズ部１２の光軸Ｃ方向に全反射する。レンズの後部のレンズ側界面に第２全反射面２０を形成する。広角レンズ部１２の斜め方向から侵入し第１全反射面１６の端部から第２全反射面２０にかけての領域を通る第２外来光Ｌ５を、第２全反射面２０で第１全反射面１６に向けて全反射し、かつ第１全反射面１６で光軸Ｃ方向に再度全反射させる。

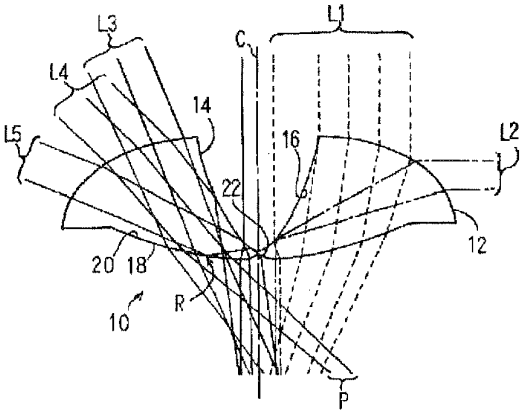

EX1003, Page 138

1

【特許請求の範囲】

【請求項1】　レンズの前部に形成された広角レンズ部と、

前記広角レンズ部の中央部に形成された凹部のレンズ側界面に形成された第1全反射面であって、前記広角レンズ部の主として横方向からの第1外来光を前記広角レンズ部の光軸方向に全反射する前記第1全反射面と、

レンズの後部のレンズ側界面に形成された第2全反射面であって、前記広角レンズ部の斜め方向から侵入し前記第1全反射面の端部から前記第2全反射面にかけての領域を通る第2外来光を、前記第2全反射面で第1全反射面に向けて全反射し、かつ前記第1全反射面で前記広角レンズ部の光軸方向に再度全反射する前記第2全反射面とを有する広角集光レンズ。

【発明の詳細な説明】

【0001】

【産業上の利用分野】本発明は広角集光レンズに関し、特に防犯用等の熱光センサーや温度センサー、あるいは太陽電池への集光用レンズとして、光熱エネルギーを効率よく集光するに好適な広角集光レンズである。

【0002】

【従来の技術】防犯用の熱光センサーなど、広角指向特性が要求される光学センサーのレンズには、例えば、図4のような広角レンズ5が使用される。この広角レンズ5の裏面中央部近傍に受光素子6が配置されて、防犯用等の熱光センサーが構成される。

【0003】広角レンズ5は、その前方や側方からの外来光（太陽光、赤外線の熱光）を裏面中央部に集光させて、受光素子6に入射させる。広角レンズ5の光軸に受光素子6の受光面が直交し、広角レンズ5から受光素子6に効率よく光が入射するようにしてある。

【0004】受光素子6は、入射する外来光の光量に応じた起電力を発生する焦電素子などである。受光素子6で発生した起電力信号を演算処理することで、広角レンズ5に入射する外来光の有無、光量などが検知される。

【0005】

【発明が解決しようとする課題】入射光に対する受光素子6の指向特性は、例えば図5の実線グラフaに示すような特性である。図5は、受光素子6の真正面から来る入射角0°の外来光に対する受光素子6の相対感度を100％とすると、外来光の入射角θが例えば約40°に増大すると、受光素子6の相対感度は約60％に下がることを示している。

【0006】従来の広角レンズ5は、入射角度θがごく小さい範囲内では受光素子6にほぼ垂直に外来光が入るから十分な相対感度が得られる。しかし、入射角度θが図4のようにほぼ90°に近くなると、レンズの屈折作用により多少は入射角度が減少するものの相対感度は0％に近く、実用的に十分な相対感度を得るには遠く及ばず、受光素子6はほとんど起電力を発生しない。

2

【0007】すなわち、広角レンズ5の側方からの外来光は、広角レンズ5から受光素子6の受光面にほぼ水平に近い角度で入射するので、その光のほとんどが受光素子の受光面で全反射して、受光素子6に入射する光量が激減し、受光素子6が応答しない。また、広角レンズ5の側方からの外来光は、一般の広角レンズの

【0008】$\cos^4\theta$の法則によっても受光素子6に入射する光量が減少して、受光素子6　の相対感度がほぼ0％になる。

【0009】したがって、広角レンズ5を使った熱光センサーにおいては、広角レンズ5の前方からの外来光に対しては高感度で応答するが、広角レンズ5の側方からの外来光に対してはほとんど応答せず、熱光センサーとしての用をなさない。換言すると、熱光センサーが外来光をキャッチして、これをセンサーとして満足できる感度で検知できるエリアの指向角αが狭く、その拡大が難しいのが現状である。

【0010】例えば、上記広角レンズ5を防犯用熱光センサーに使用した場合、この熱光センサーが防犯センサーとして満足できる感度で外来光を検知できるエリアの指向角αは、大きくできたとしてせいぜい30°程度である。そのため、レンズ前方180°のエリアを防犯センサーとして満足できる感度で検知するためには、レンズ前方180°エリアを複数に等分して、等分された各エリアに1つずつ熱光センサーを配置する必要があり、防犯設備のコスト高を招いている。

【0011】本発明の目的は、レンズ側方からの外来光も効率的に集光することができる広角集光レンズを提供することにある。

【0012】

【課題を解決するための手段】本発明の特徴は、広角レンズ部の中央部に形成された凹部のレンズ側界面に形成された第1全反射面であって、広角レンズ部の主として横方向からの第1外来光を広角レンズ部の光軸方向に全反射する第1全反射面と、

【0013】レンズの後部のレンズ側界面に形成された第2全反射面であって、広角レンズ部の斜め方向から侵入し第1全反射面の端部から第2全反射面にかけての領域を通る第2外来光を、第2全反射面で第1全反射面に向けて全反射し、かつ第1全反射面で広角レンズ部の光軸方向に再度全反射する第2全反射面を具備したことである。

【0014】

【作用】広角レンズ部の主として横方向からの第1外来光は、第1全反射面により光軸方向に全反射され、また広角レンズ部の斜め方向から侵入する光であって第1全反射面に入射せずにレンズ後部に向かう光は、第2全反射面により第1全反射面に向けて全反射され、該第1全反射面により光軸方向に再度全反射される。

【0015】

【実施例】以下に本発明の実施例につき図１～３に基づき説明する。図１は第１実施例に係る広角集光レンズ１０の断面を示し、Ｃはレンズ１０の光軸である。レンズ１０の前部には凸状の広角レンズ部１２が形成され、この広角レンズ部１２の中央部に擂鉢（すりばち）状の凹部１４が形成されている。そして凹部１４のレンズ側界面に第１全反射面１６が形成されている。

【００１６】レンズ１０の後部は緩い凸状面１８とされ、この凸状面１８のレンズ側界面に第２全反射面２０が形成されている。なお凸状面１８の中央部には前記擂鉢状凹部１４に近接した小凹部２２が形成されている。

【００１７】次に前記実施例の作用について説明する。レンズ１０の真正面からの外来光Ｌ１（破線で示す。）は、一部は広角レンズ部１２を通過し、また残りは凹部１４を通過し、それぞれ凸状面１８から出てレンズ１０の光軸Ｃを中心に集光される。一方、レンズ１０の真横からの第１外来光Ｌ２（一点鎖線で示す。）は、広角レンズ部１２を通過し、第１全反射面１６で全反射され、凸状面１８から出てレンズ１０の光軸Ｃを中心に集光される。

【００１８】次に、レンズ１０の斜め前方からの外来光Ｌ３，Ｌ４及び第２外来光Ｌ５について説明する。３つの外来光Ｌ３，Ｌ４，Ｌ５は、この順番で光軸Ｃとの角度が次第に大きくなっている。外来光Ｌ３は広角レンズ部１２を通過した後、第１全反射面１６に当たらずに、また第２全反射面２０でも全反射されずに、レンズ１０後方に出ていく。ただし集光位置は光軸Ｃに接近しているので集光性能上問題はない。

【００１９】外来光Ｌ４は、その一部が第１全反射面１６に当たり、レンズ１０から光軸Ｃ方向に出ていく。しかし、残りの外来光Ｌ４は、第１全反射面１６に当たらず、また第２全反射面２０でも反射されずに、レンズ１０から出ていく。このため集光位置Ｐは光軸Ｃから大分離れてしまう。このような光がレンズ１０に対する入射角度で広いに範囲にわたり存在すると、レンズ１０の集光性能が悪くなる。本発明は、できるだけこの種の外来光を少なくした点が特徴の一つである。

【００２０】すなわち、第２外来光Ｌ５では、最初に第１全反射面１６に当たるものと、最初に第２全反射面２０に当たるものに二分されるが、どちらの外来光も光軸Ｃに接近して集光される。詳しくは、最初に第１全反射面１６に当たった光は第２全反射面２０を通過してレンズ１０後方にほぼ光軸方向に出ていく。また最初に第２全反射面２０に当たった光は全反射点Ｒで第１全反射面１６の方向に全反射され、第１全反射面１６で再度全反射された後、小凹部２２を通過してレンズ１０後方に光軸Ｃ方向で出ていく。

【００２１】従って、レンズ１０の指向特性及び相対感度は図４の従来の広角レンズ５に比べると、図５の破線グラフｂに示すように大幅に改善される。

【００２２】本発明は前記の如くレンズ１０前部の凹部１４のレンズ側界面に形成された第１全反射面１６と、レンズ１０後部のレンズ側界面に形成された第２全反射面２０を特徴とするものであるのであって、図１に示す実施例の他、図２及び図３に示すレンズ３０，４０でも同様の目的を達成可能である。

【００２３】

【発明の効果】本発明は前記の如く、広角レンズ部の主として横方向からの第１外来光は、第１全反射面により光軸方向に全反射し、また広角レンズ部の斜め方向から侵入する光であって第１全反射面に入射せずにレンズ後部に向かう光は、第２全反射面により第１全反射面に向けて全反射し、該第１全反射面により光軸方向に再度全反射するようにしたので、前方約１８０°の広いエリアにわたって良好な集光特性が得られる。

【図面の簡単な説明】

【図１】　本発明の第１実施例に係る広角集光レンズの断面図。

【図２】　本発明の第２実施例に係る広角集光レンズの断面図。

【図３】　本発明の第３実施例に係る広角集光レンズの断面図。

【図４】　従来の熱光センサーの概略を示す側面図。

【図５】　熱光センサーの指向性と相対感度の特性図。

【符号の説明】

１０，３０，４０　広角集光レンズ
１２　広角レンズ部
１４　凹部
１６　第１全反射面
２０　第２全反射面
Ｌ２　第１外来光
Ｌ５　第２外来光

【図1】

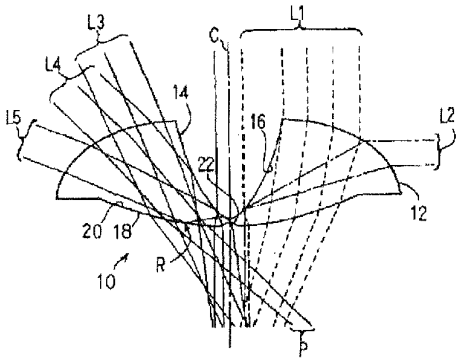

【図2】

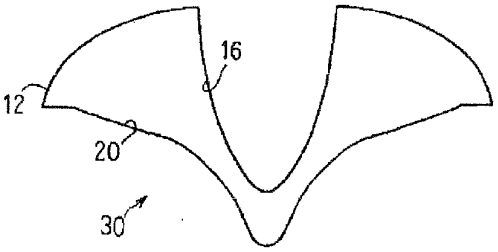

【図3】

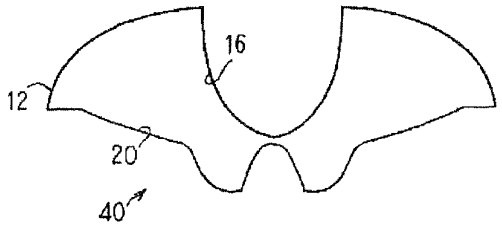

【図4】

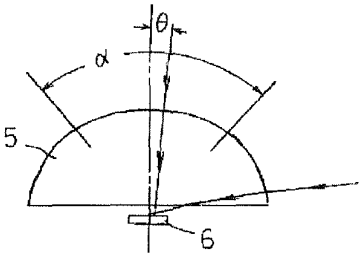

【図5】

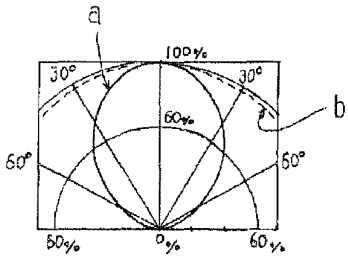

フロントページの続き

(51)Int.Cl.⁵	識別記号	庁内整理番号	ＦＩ	技術表示箇所
Ｇ０２Ｂ　13/14		9120－2K		

ACCURATE ALIGNMENT FOR LED ASSEMBLY

Publication number: JP2004221598
Publication date: 2004-08-05
Inventor: ELPEDES CRESENTE S; BIN AZIZ ZAINUL FITERI; MARTIN PAUL S
Applicant: LUMILEDS LIGHTING US LLC
Classification:
- International: ***H01L33/00;*** H01L33/00; (IPC1-7): H01L33/00
- European: H01L33/00B7
Application number: JP20040008034 20040115
Priority number(s): US20030346535 20030116

Also published as:
- EP1439587 (A1)
- US7170151 (B2)
- US2004140543 (A1)

Report a data error here

Abstract of **JP2004221598**

PROBLEM TO BE SOLVED: To provide a method for accurately mounting a LED (light-emitting diode), and an LED assembly thereof. SOLUTION: The LED assembly includes a heat sink and a sub-mount. The heat sink has an upper-mating surface of a soluble solder, and the sub-mount has a lower mating surface which is a soluble solder. The upper and lower mating surface have substantially the same shape and area. The sub-mount is soldered on the heat sink and is aligned with the upper mating surface with melted solder, when reflow soldering. The LED assembly may further include a substrate having an upper mating surface, and the heat sink may further include an lower mating surface. The upper and lower mating surfaces have substantially the same shape and area. The heat sink is soldered on the substrate, and is aligned with the upper-mating surface of the substrate with the melted solder, when reflow soldering.
COPYRIGHT: (C)2004,JPO&NCIPI

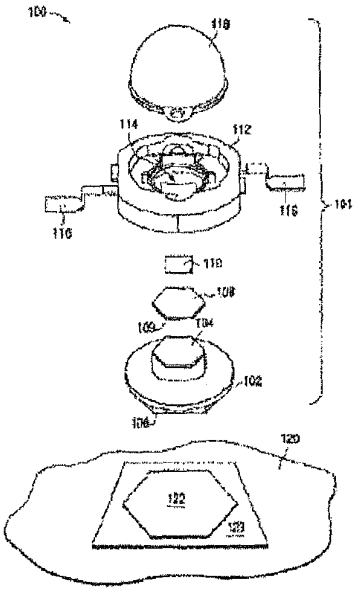

Data supplied from the ***esp@cenet*** database - Worldwide

(19)日本国特許庁(JP)　(12)公開特許公報(A)　(11)特許出願公開番号
特開2004-221598
(P2004-221598A)
(43)公開日　平成16年8月5日(2004.8.5)

(51)Int.Cl.⁷	F I		テーマコード（参考）
H01L 33/00	H01L 33/00	N	5F041

審査請求 未請求　請求項の数 26　OL　（全 9 頁）

(21)出願番号　特願2004-8034(P2004-8034)
(22)出願日　平成16年1月15日(2004.1.15)
(31)優先権主張番号　10/346535
(32)優先日　平成15年1月16日(2003.1.16)
(33)優先権主張国　米国(US)

(71)出願人　500507009
ルミレッズ　ライティング　ユーエス　リミテッドライアビリティ　カンパニー
アメリカ合衆国　カリフォルニア州　９５１３１　サン　ホセ　ウェスト　トリンブル　ロード　３７０
(74)代理人　100082005
弁理士　熊倉　禎男
(74)代理人　100067013
弁理士　大塚　文昭
(74)代理人　100074228
弁理士　今城　俊夫
(74)代理人　100086771
弁理士　西島　孝喜

最終頁に続く

(54)【発明の名称】ＬＥＤアセンブリの正確なアラインメント

(57)【要約】
【課題】　ＬＥＤ（発光ダイオード）の正確な装着方法及びそのＬＥＤアセンブリを提供する。
【解決手段】　ヒートシンク及びサブマウントを含むＬＥＤアセンブリ。ヒートシンクは、半田可溶性の上部合わせ面を有し、サブマウントは、半田可溶性の下部合わせ面を有する。上部及び下部合わせ面は、実質的に同じ形状及び面積を有する。サブマウントは、ヒートシンクの上に半田付けされる。半田リフローの間に、溶融半田により、サブマウントがヒートシンクの上部合わせ面と位置合せされる。ＬＥＤアセンブリは、上部合わせ面を有する基板を更に含むことができ、ヒートシンクは、下部合わせ面を更に含むことができる。上部及び下部合わせ面は、実質的に同じ形状及び面積を有する。ヒートシンクは、基板の上に半田付けされる。半田リフローの間に、溶融半田により、ヒートシンクが基板の上部合わせ面と位置合せされる。
【選択図】　図１Ａ

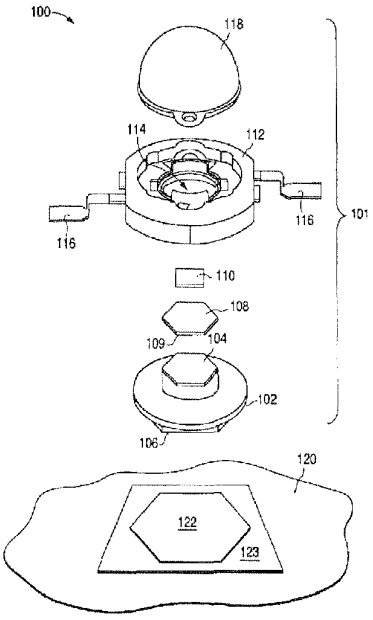

【特許請求の範囲】
【請求項１】
半田可溶性の上部合わせ面を含むヒートシンクと、
該上部合わせ面と実質的に同じ形状及び面積を有する半田可溶性の下部合わせ面を含み、第１の半田により該ヒートシンクの上に結合されたサブマウントと、
該サブマウントの上に結合されたＬＥＤダイと、
を含むことを特徴とするＬＥＤアセンブリ。
【請求項２】
前記上部合わせ面及び前記下部合わせ面の形状は、六角形であることを特徴とする請求項１に記載のアセンブリ。
【請求項３】
前記上部合わせ面は、隆起面であることを特徴とする請求項１に記載のアセンブリ。
【請求項４】
前記ヒートシンクを受け入れるための空洞を形成する絶縁本体と、
該絶縁本体に取り付けられた金属リードと、
前記サブマウントを該金属リードに結合させるボンドワイヤと、
を更に含むことを特徴とする請求項１に記載のアセンブリ。
【請求項５】
前記ヒートシンクは、半田可溶性の第２の下部合わせ面を更に含むことを特徴とする請求項１に記載のアセンブリ。
【請求項６】
前記第２の下部合わせ面は、隆起面であることを特徴とする請求項５に記載のアセンブリ。
【請求項７】
前記第２の下部合わせ面と実質的に同じ形状及び面積を有する半田可溶性の第２の上部合わせ面を備えた基板を更に含み、
前記ヒートシンクは、第２の半田により該基板の上に結合される、
ことを特徴とする請求項５に記載のアセンブリ。
【請求項８】
前記第２の下部合わせ面及び前記第２の上部合わせ面の形状は、六角形であることを特徴とする請求項７に記載のアセンブリ。
【請求項９】
前記ＬＥＤダイは、フリップチップであることを特徴とする請求項１に記載のアセンブリ。
【請求項１０】
前記ＬＥＤダイは、第３の半田により前記サブマウントの上の導体に結合された接触パッドを含むことを特徴とする請求項５に記載のアセンブリ。
【請求項１１】
前記第３の半田は、前記第１の半田よりも高い液相線温度を有し、該第１の半田は、前記第２の半田よりも高い液相線温度を有することを特徴とする請求項１０に記載のアセンブリ。
【請求項１２】
前記ヒートシンクは、熱伝導性スラグであることを特徴とする請求項１に記載のアセンブリ。
【請求項１３】
前記上部及び下部合わせ面は、１つの円周が別の円周の少なくとも５０％である時に実質的に同じ形状及び面積を有することを特徴とする請求項１に記載のアセンブリ。
【請求項１４】
前記上部及び下部合わせ面は、前記第１の半田が該上部及び下部合わせ面を少なくとも２０ミクロンの精度で位置合わせする時に実質的に同じ形状及び面積を有することを特徴

とする請求項１に記載のアセンブリ。
【請求項１５】
ＬＥＤダイをサブマウント上に装着する段階と、
実質的に同じ形状及び面積を有する、前記サブマウントの下部合わせ面とヒートシンクの上部合わせ面との間に第１の半田を付加する段階と、
リフローする間に前記サブマウント及び前記ヒートシンクが位置合わせされて互いに結合されるように、前記第１の半田をリフローする段階と、
を含むことを特徴とする、ＬＥＤコンポーネントを組み立てる方法。
【請求項１６】
前記第１の半田を付加する段階は、
前記第１の半田を前記ヒートシンクの前記上部合わせ面に付加する段階と、
該ヒートシンクの該上部合わせ面の上の該第１の半田上に、前記サブマウントの前記下部合わせ面を配置する段階と、
を含むことを特徴とする請求項１５に記載の方法。
【請求項１７】
実質的に同じ形状及び面積を有する、前記ヒートシンクの第２の下部合わせ面と基板の第２の上部合わせ面との間に第２の半田を付加する段階と、
リフローする間に前記ヒートシンク及び前記基板が位置合わせされて互いに結合されるように、前記第２の半田をリフローする段階と、
を更に含むことを特徴とする請求項１５に記載の方法。
【請求項１８】
前記第２の半田を付加する段階は、
該第２の半田を前記基板の前記第２の上部合わせ面に付加する段階と、
該基板の該第２の上部合わせ面の上の該第２の半田上に、前記ヒートシンクの前記第２の下部合わせ面を配置する段階と、
を含むことを特徴とする請求項１７に記載の方法。
【請求項１９】
前記第１の半田をリフローする段階は、前記第２の半田をリフローする段階よりも高い温度で起こることを特徴とする請求項１７に記載の方法。
【請求項２０】
前記ＬＥＤダイをサブマウント上に装着する段階は、
第３の半田を該ＬＥＤダイと該サブマウントとの間に付加する段階と、
リフローする間に該ＬＥＤダイ及び該サブマウントが互いに結合されるように、該第３の半田をリフローする段階と、
を含むことを特徴とする請求項１７に記載の方法。
【請求項２１】
前記第３の半田をリフローする段階は、前記第１の半田をリフローする段階よりも高い温度で起こることを特徴とする請求項２０に記載の方法。
【請求項２２】
前記下部合わせ面及び前記上部合わせ面の形状は、六角形であることを特徴とする請求項１５に記載の方法。
【請求項２３】
前記第２の下部合わせ面及び前記第２の上部合わせ面の形状は、六角形であることを特徴とする請求項１７に記載の方法。
【請求項２４】
前記ヒートシンクは、熱伝導性スラグであることを特徴とする請求項１７に記載の方法。
【請求項２５】
前記上部及び下部合わせ面は、１つの円周が別の円周の少なくとも５０％である時に実質的に同じ形状及び面積を有することを特徴とする請求項１５に記載の方法。

【請求項２６】
前記上部及び下部合わせ面は、前記第１の半田が該上部及び下部合わせ面を少なくとも２０ミクロンの精度で位置合わせする時に実質的に同じ形状及び面積を有することを特徴とする請求項１５に記載の方法。
【発明の詳細な説明】
【技術分野】
【０００１】
本発明は、ＬＥＤ（発光ダイオード）に関し、具体的には、ＬＥＤの正確な装着に関する。
【背景技術】
【０００２】
ＩＩＩ族窒化物ＬＥＤのような光学的光源は、シリコンのような中間材料又はサブマウント上に「フリップチップ」方式で装着される場合がある。パッケージ全体は、光発生能力全体を高めると同時に高電流密度作動を考慮して熱抵抗が低くなるように設計されている。通常は、エポキシ化合物を用いてサブマウントをヒートシンク上に取り付け、支持部及びフリップチップ装置とＬＥＤパッケージとの間の熱経路を形成する。次に、同様のエポキシ化合物を用いて、ＬＥＤパッケージが顧客の配線盤に取り付けられる。
【発明の開示】
【発明が解決しようとする課題】
【０００３】
しかしながら、エポキシで取り付けられた装置は、（ａ）エポキシが、パッケージのより高い熱抵抗をもたらす本質的に弱い熱伝導性を有すること、（ｂ）光学的性能の低下をもたらす合わせ部品間の不十分なアラインメント、及び（ｃ）短絡をもたらす可能性があるチップ側のフィレットの形成という様々な欠点を有する。従って、これらの問題に対処するＬＥＤアセンブリが必要である。
【課題を解決するための手段】
【０００４】
本発明の一実施形態において、ＬＥＤアセンブリは、ヒートシンク及びサブマウントを含む。ヒートシンクは、半田可溶性の上部合わせ面を有し、サブマウントは、半田可溶性の下部合わせ面を有する。上部及び下部合わせ面は、実質的に同じ形状及び面積を有する。サブマウントは、ヒートシンクの上に半田付けされる。リフロー処理の間に、溶融半田により、サブマウントがヒートシンクの上部合わせ面と位置合せされる。
一実施形態においては、アセンブリは、半田可溶性の第２の上部合わせ面を有する基板を更に含み、ヒートシンクは、半田可溶性の第２の下部合わせ面を更に含む。第２の上部及び下部合わせ面は、実質的に同じ形状及び面積を有する。ヒートシンクは、基板の上に半田付けされる。リフロー処理の間に、溶融半田により、ヒートシンクが基板の第２の上部合わせ面と位置合せされる。
【発明を実施するための最良の形態】
【０００５】
本発明の一実施形態においては、サブマウントは、エポキシの代わりに半田によりヒートシンク上に装着される。サブマウントは、半田付け可能な下部合わせ面を有し、ヒートシンクは、実質的に同じ形状及び面積の半田付け可能な上部合わせ面を有する。半田リフローの間に、溶融半田によりサブマウントがヒートシンクと位置合せされる。更に、ヒートシンクは、エポキシの代わりに半田により基板上に装着される。ヒートシンクは、半田付け可能な下部合わせ面を有し、基板は、実質的に同じ形状及び面積の半田付け可能な上部合わせ面を有する。ここでもまた、半田リフローの間に、溶融半田によりヒートシンクが基板と位置合せされる。
【０００６】
図１Ａ及び図２Ｂは、一実施形態におけるＬＥＤアセンブリ１００の組立分解図である。図２は、組み立てられたＬＥＤアセンブリ１００の断面図である。ＬＥＤアセンブリ１

００は、ＬＥＤパッケージ１０１及び基板１２０を含む。

ＬＥＤパッケージ１０１は、サブマウント１０８上に装着されたＬＥＤダイ１１０を含む。サブマウント１０８は、導電性又は絶縁性とすることができる。サブマウント１０８は、シリコン、銅、銀、ダイヤモンド、アルミニウム、タングステン、モリブデン、ベリリウム、アルミナ、窒化アルミニウム、酸化ベリリウム、窒化ホウ素、又は、他の熱伝導性材料、化合物、又は複合物で作ることができる。本実施形態においては、ＬＥＤダイ１１０は、サブマウント１０８上のボールグリッドアレーを半田１２９を用いてＬＥＤダイ１１０上の接触パッドに半田付けすることにより、サブマウント１０８に結合される（図２）。サブマウント１０８は、ＬＥＤダイ１１０をボンドワイヤ接点に結合する導電トレースで形成される。ツェナーダイオードをトレースの経路に形成して静電放電を防止することができる。

【０００７】

サブマウント１０８は、ヒートシンク１０２（「スラグ」とも呼ばれる）上に装着される。スラグ１０２は、シリコン、銅、銀、ダイヤモンド、アルミニウム、タングステン、モリブデン、ベリリウム、アルミナ、窒化アルミニウム、酸化ベリリウム、窒化ホウ素、又は、他の熱伝導性材料、化合物、又は複合物で作ることができる。スラグ１０２は、半田可溶性の上部合わせ面１０４（図１Ａ及び図２に示す）及び半田可溶性の下部合わせ面１０６を有する。スラグ１０２が本質的に非可溶性材料の場合は、合わせ面１０４及び１０６は、銀、ニッケル、金、錫、銅、又はパラジウムのような可溶性材料の層をスラグ１０２上に堆積させることにより可溶性にすることができる。本実施形態においては、合わせ面１０４及び１０６は、スラグ１０２の隆起面である。他の実施形態においては、合わせ面１０４及び１０６は、非可溶性表面内に包含された水平な可溶性表面としてもよい。スラグ１０２が本質的に可溶性材料の場合は、合わせ面１０４及び１０６は、スラグ１０２上に堆積させた半田マスク又は酸化物のような非可溶性材料の層によって形成することができる。

【０００８】

半田ペーストは、合わせ面１０４上に堆積され、サブマウント１０８は、合わせ面１０４の上の半田ペースト上に配置される。サブマウント１０８は、合わせ面１０４と実質的に同じ形状及び大きさを有する半田可溶性の下部合わせ面１０９を有する。サブマウント１０８が本質的に非可溶性材料の場合は、合わせ面１０９は、銀、ニッケル、金、錫、銅、又はパラジウムのような可溶性材料の層をサブマウント１０８の底面上に堆積させることにより可溶性にすることができる。半田ペーストは、従来のリフロー処理中に加熱される。合わせ面１０９が合わせ面１０４と実質的に同じ形状及び面積を有するために、溶融半田は、その溶融半田の表面張力によって合わせ面１０９を合わせ面１０４と位置合せする。一実施形態においては、小さい方の円周が大きい方の円周の５０％又はそれ以上の時に、２つの面は、実質的に同じ形状及び面積を有する。別の実施形態においては、２つの面は、溶融半田がそれらを２０ミクロン又はそれに優る精度で位置合わせすることができる時に実質的に同じ形状及び面積を有する。

【０００９】

リフロー処理の最後に、半田ペーストは、サブマウント１０８を合わせ面１０４に結合する半田１２４（図２）となる。すなわち、ＬＥＤダイ１１０は、スラグ１０２と正確に位置合わせされて結合することができる。本実施形態においては、合わせ面１０９及び１０４は両方とも六角形である。他の実施形態においては、合わせ面が実質的に同じ形状及び大きさであるという条件の下で、代替の幾何学的形態が用いられる。

【００１０】

ＬＥＤパッケージ１００は、空洞１１４を形成する本体１１２を更に含む（図１Ａ及び図１Ｂ）。本体１１２は、プラスチックのような任意の誘電体で作ることができる。スラグ１０２は、空洞１１４の内部で本体１１２に装着される。本体１１２は、ＬＥＤパッケージ１００と他のコンポーネントとの間に電気信号を通すリード１１６を含む。ボンドワイヤ１２８（図２）は、サブマウント１０８をリード１１６に結合させる。本体１１２は

、本体１１２上に装着されたレンズ１１８を更に含む。封入材をレンズ１１８に充填してＬＥＤダイ１１０を保護することができる。

【００１１】

ＬＥＤ１００パッケージは、熱伝導性基板１２０上に装着することができる。基板１２０は、半田可溶性の上部合わせ面１２２を有する。本実施形態においては、合わせ面１２２は水平であり、非可溶性表面１２８内に包含される。合わせ面１２２は、銀、ニッケル、金、錫、銅、又はパラジウムのような可溶性材料の層を基板１２０上に堆積させることにより可溶性にすることができる。非可溶性表面１２８は、半田マスク又は酸化物のような非可溶性材料の層を基板１２０上に堆積させることにより作ることができる。他の実施形態においては、合わせ面１２２は、基板１２０の隆起面としてもよい。

【００１２】

半田ペーストは、合わせ面１２２上に堆積され、スラグ１０２は、合わせ面１２２の上の半田ペースト上に配置される。スラグの合わせ面１０６は、合わせ面１２２と実質的に同じ形状及び面積を有する。半田ペーストは、従来のリフロー処理中に加熱される。合わせ面１０６が合わせ面１２２と実質的に同じ形状及び面積を有するために、溶融半田は、合わせ面１０６を合わせ面１２２に対して位置合わせする。リフロー処理の最後に、半田ペーストは、スラグのＬＥＤパッケージ１０１を合わせ面１２２に結合する半田１２６（図２）となる。すなわち、ＬＥＤパッケージ１０１は、基板１２０と正確に位置合わせされて結合することができる。本実施形態においては、合わせ面１０６及び１２２は両方とも六角形である。他の実施形態においては、合わせ面が実質的に同じ形状及び大きさであるという条件の下で、代替の幾何学的形態が用いられる。

【００１３】

半田１２４及び１２６は、エポキシよりも低い熱抵抗を有し、従って、それらは、より高温の作動のためにより多くの熱をＬＥＤパッケージ１００から基板１２０に伝導させる。半田１２４及び１２６はまた、高温作動において エポキシよりも強固で信頼性がある。更に、半田１２４はまた、いかなる余分な半田も隆起した合わせ面１０４の周囲を流れ下り、サブマウント１０８の伝導性上面及び取り付けられたボンドワイヤ１２８から離れる方向に流れることになるために、サブマウント１０８をスラグ１０２に短絡させる可能性が少ない。

【００１４】

一実施形態においては、半田１２９の液相線温度は、半田１２４のそれよりも高く、半田１２４の液相線温度は、半田１２６のそれよりも高い。これは、次に続くリフロー処理が先のリフロー処理からの半田付けされた部分を乱すことを防止する。

ＬＥＤダイは、本発明を使用するのにフリップチップである必要はない。

開示した実施形態の特徴の他の種々の適応及び組合せは、本発明の範囲内である。例えば、半田ペーストは、２つの可溶性合わせ面のいずれか一方又は両方に付加してもよい。特許請求の範囲は、多くの実施形態を包含する。

【図面の簡単な説明】

【００１５】

【図１Ａ】一実施形態におけるＬＥＤパッケージ１００の組立分解図である。

【図１Ｂ】一実施形態におけるＬＥＤパッケージ１００の組立分解図である。

【図２】図１の実施形態におけるＬＥＤパッケージ１００の断面図である。

【符号の説明】

【００１６】

１００　ＬＥＤアセンブリ
１０１　ＬＥＤパッケージ
１０２　ヒートシンク又はスラグ
１０４、１２２　上部合わせ面
１０６　下部合わせ面
１０８　サブマウント

１１０　ＬＥＤダイ
１１６　リード
１１８　レンズ
１２０　基板

【図１Ａ】

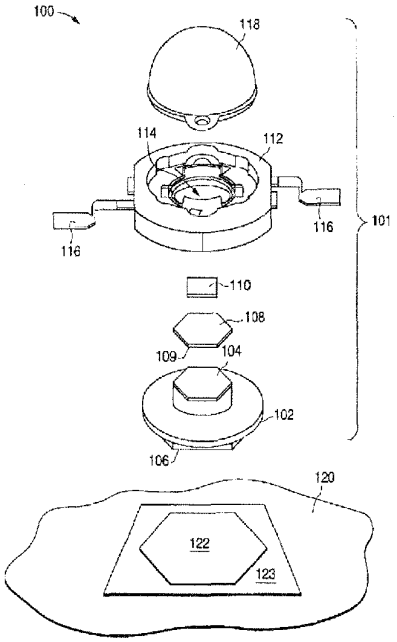

【図１Ｂ】

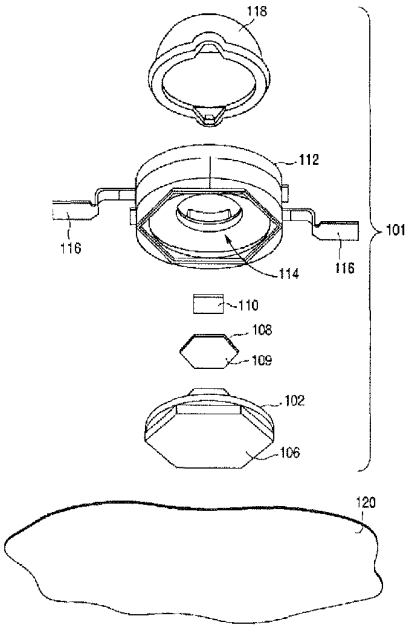

【図 2】

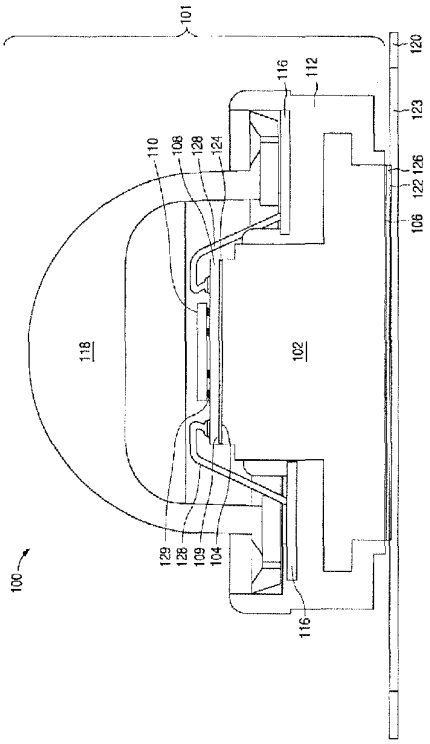
100
101
118
102
110
108
128
124
116
112
129
128
109
104
116
120
123
126
122
106

フロントページの続き

(72)発明者 クレセント エス エルペデス
アメリカ合衆国 カリフォルニア州 95123 サン ホセ コリーン ドライヴ 770
(72)発明者 ザイヌル フィテリ ビン アジズ
マレーシア ペナン バヤン レパス 11900 ブキット ジャンブル ゴルフビュー アパートメント 31-5-3
(72)発明者 ポール エス マーティン
アメリカ合衆国 カリフォルニア州 94588 プレザントン フェアオークス ドライヴ 7665

Fターム(参考) 5F041 AA25 AA33 AA37 AA43 AA44 DA03 DA09 DA12 DA19 DA32
DA35 DC12 DC26 DC46 DC56

Electronic Patent Application Fee Transmittal

Application Number:	
Filing Date:	
Title of Invention:	SIDE-LUMINESCENCE LENS AND LUMINESCENT DEVICE USING THE SAME
First Named Inventor/Applicant Name:	Do-Hyung KIM
Filer:	Alexander Charles Johnson/Li Mei Vermilya
Attorney Docket Number:	3576-043

Filed as Large Entity

U.S. National Stage under 35 USC 371 Filing Fees

Description	Fee Code	Quantity	Amount	Sub-Total in USD($)
Basic Filing:				
National Stage Fee	1631	1	300	300
Natl Stage Search Fee - Report provided	1642	1	400	400
National Stage Exam - all other cases	1633	1	200	200
Pages:				
Claims:				
Miscellaneous-Filing:				
Petition:				
Patent-Appeals-and-Interference:				

Description	Fee Code	Quantity	Amount	Sub-Total in USD($)
Post-Allowance-and-Post-Issuance:				
Extension-of-Time:				
Miscellaneous:				
			Total in USD ($)	**900**

Electronic Acknowledgement Receipt

EFS ID:	1662784
Application Number:	11576882
International Application Number:	PCT/KR05/03346
Confirmation Number:	6820
Title of Invention:	SIDE-LUMINESCENCE LENS AND LUMINESCENT DEVICE USING THE SAME
First Named Inventor/Applicant Name:	Do-Hyung KIM
Customer Number:	20575
Filer:	Alexander Charles Johnson/Li Mei Vermilya
Filer Authorized By:	Alexander Charles Johnson
Attorney Docket Number:	3576-043
Receipt Date:	06-APR-2007
Filing Date:	
Time Stamp:	19:41:32
Application Type:	U.S. National Stage under 35 USC 371

Payment information:

Submitted with Payment	yes
Payment was successfully received in RAM	$900
RAM confirmation Number	817
Deposit Account	

File Listing:

Document Number	Document Description	File Name	File Size(Bytes)	Multi Part /.zip	Pages (if appl.)

1	Application Data Sheet	US_ADS_Form_SB_14.pdf	1124954	no	5
Warnings:					
Information:					
2		efsapplication.pdf	10670334	yes	143

	Multipart Description/PDF files in .zip description		
	Document Description	**Start**	**End**
	Miscellaneous Incoming Letter	1	1
	Transmittal of New Application	2	4
	Specification	5	35
	Claims	36	38
	Abstract	39	39
	Drawings	40	68
	Oath or Declaration filed	69	71
	Documents submitted with 371 Applications	72	127
	Information Disclosure Statement (IDS) Filed	128	128
	Foreign Reference	129	133
	Foreign Reference	134	143

Warnings:					
Information:					
3	Fee Worksheet (PTO-06)	fee-info.pdf	8441	no	2
Warnings:					
Information:					
		Total Files Size (in bytes):	11803729		

This Acknowledgement Receipt evidences receipt on the noted date by the USPTO of the indicated documents, characterized by the applicant, and including page counts, where applicable. It serves as evidence of receipt similar to a Post Card, as described in MPEP 503.

New Applications Under 35 U.S.C. 111
If a new application is being filed and the application includes the necessary components for a filing date (see 37 CFR 1.53(b)-(d) and MPEP 506), a Filing Receipt (37 CFR 1.54) will be issued in due course and the date shown on this Acknowledgement Receipt will establish the filing date of the application.

National Stage of an International Application under 35 U.S.C. 371
If a timely submission to enter the national stage of an international application is compliant with the conditions of 35 U.S.C. 371 and other applicable requirements a Form PCT/DO/EO/903 indicating acceptance of the application as a national stage submission under 35 U.S.C. 371 will be issued in addition to the Filing Receipt, in due course.

New International Application Filed with the USPTO as a Receiving Office
If a new international application is being filed and the international application includes the necessary components for an international filing date (see PCT Article 11 and MPEP 1810), a Notification of the International Application Number and of the International Filing Date (Form PCT/RO/105) will be issued in due course, subject to prescriptions concerning national security, and the date shown on this Acknowledgement Receipt will establish the international filing date of the application.

(12) INTERNATIONAL APPLICATION PUBLISHED UNDER THE PATENT COOPERATION TREATY (PCT)

(19) World Intellectual Property Organization
International Bureau

(43) International Publication Date
3 August 2006 (03.08.2006)

PCT

(10) International Publication Number
WO 2006/080729 A1

(51) International Patent Classification:
H01L 33/00 (2006.01)

(21) International Application Number:
PCT/KR2005/003346

(22) International Filing Date: 7 October 2005 (07.10.2005)

(25) Filing Language: Korean

(26) Publication Language: English

(30) Priority Data:

10-2004-0079909	7 October 2004 (07.10.2004)	KR
10-2005-0000269	3 January 2005 (03.01.2005)	KR
10-2005-0056436	28 June 2005 (28.06.2005)	KR
10-2005-0083743	8 September 2005 (08.09.2005)	KR

(71) Applicant *(for all designated States except US)*: **SEOUL SEMICONDUCTOR CO., LTD.** [KR/KR]; 148-29, Gasan-Dong, Geumcheon-gu, Seoul 153 - 023 (KR).

(72) Inventors; and
(75) Inventors/Applicants *(for US only)*: **KIM, Do Hyung** [KR/KR]; 425-1604 Yeonggot Maeul Apt., Jeongja 3-dong, Jangan-gu, Suwon 440 - 720 (KR). **LEE, Chung Hoon** [KR/KR]; 305-701 Olympic Apt., Bangi-dong, Songpa-gu, Seoul 138 - 050 (KR). **LEE, Keon Young** [KR/KR]; Jungwon villa 3-101, Gojan 1-dong, Danwon-Gu, Ansan 425 - 803 (KR). **PARK, Kwang Il** [KR/KR]; 2-302 Seonwoo village, 909-19, Bongcheonbon-dong, Gwanak-Gu, Seoul 151 - 840 (KR).

(74) Agent: **NAM, Seung-Hee**; 12F, Seo-Jeon Bldg., 1330-9, Seocho-dong, Seocho-Gu, Seoul 135 - 080 (KR).

(81) Designated States *(unless otherwise indicated, for every kind of national protection available)*: AE, AG, AL, AM, AT, AU, AZ, BA, BB, BG, BR, BW, BY, BZ, CA, CH, CN, CO, CR, CU, CZ, DE, DK, DM, DZ, EC, EE, EG, ES, FI, GB, GD, GE, GH, GM, HR, HU, ID, IL, IN, IS, JP, KE, KG, KM, KP, KZ, LC, LK, LR, LS, LT, LU, LV, LY, MA, MD, MG, MK, MN, MW, MX, MZ, NA, NG, NI, NO, NZ, OM, PG, PH, PL, PT, RO, RU, SC, SD, SE, SG, SK, SL, SM, SY, TJ, TM, TN, TR, TT, TZ, UA, UG, US, UZ, VC, VN, YU, ZA, ZM, ZW.

(84) Designated States *(unless otherwise indicated, for every kind of regional protection available)*: ARIPO (BW, GH, GM, KE, LS, MW, MZ, NA, SD, SL, SZ, TZ, UG, ZM, ZW), Eurasian (AM, AZ, BY, KG, KZ, MD, RU, TJ, TM), European (AT, BE, BG, CH, CY, CZ, DE, DK, EE, ES, FI, FR, GB, GR, HU, IE, IS, IT, LT, LU, LV, MC, NL, PL, PT, RO, SE, SI, SK, TR), OAPI (BF, BJ, CF, CG, CI, CM, GA, GN, GQ, GW, ML, MR, NE, SN, TD, TG).

Published:
— *with international search report*

For two-letter codes and other abbreviations, refer to the "Guidance Notes on Codes and Abbreviations" appearing at the beginning of each regular issue of the PCT Gazette.

(54) Title: SIDE ILLUMINATION LENS AND LUMINESCENT DEVICE USING THE SAME

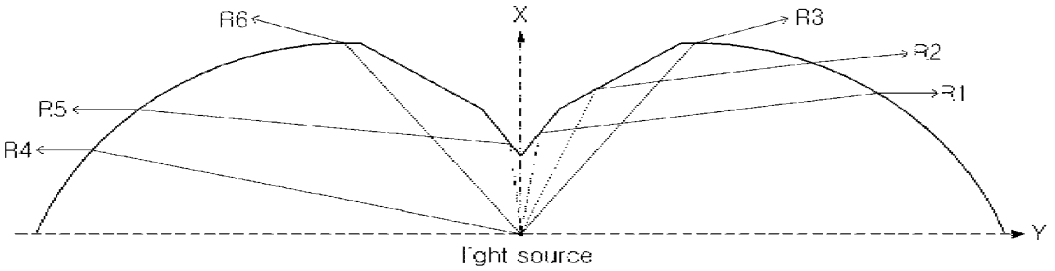

(57) Abstract: The present invention relates to a side illumination lens and a luminescent device using the same, and provides a body, a total reflection surface with a total reflection slope with respect to a central axis of the body, and a linear and/or curved refractive surface(s) formed to extend from a periphery of the total reflection surface; and a luminescent device including the lens. According to the present invention, a lens with total internal reflection surfaces with different slopes, and a linear and/or curved refractive surface(s) allows light emitted forward from a luminescent chip to be guided to a side of the lens. Further, a linear surface(s) formed in a direction perpendicular or parallel to a central axis of a lens and a curved surface are formed on an edge of the lens so that a process of fabricating the lens is facilitated, thereby reducing a defective rate and fabrication costs of the lens.

WO 2006/080729 A1

Description

SIDE ILLUMINATION LENS AND LUMINESCENT DEVICE USING THE SAME

Technical Field

[1] The present invention relates to a side illumination lens and a luminescent device using the same, and more particularly, to a side illumination lens utilizing total internal reflection and a luminescent device using the lens.

Background Art

[2] In general, a light emitting diode (LED) is a device utilizing a phenomenon in which minority carriers (electrons or holes) injected by means of a p-n junction structure of a semiconductor are produced, and light is emitted due to recombination of the carriers. Conventionally, colors of light emitted by a light emitting diode are only red and green, and thus, the conventional light emitting diode has its use limited to a display device.

[3] With the development of technology, however, light emission is allowed in various ranges of wavelength, in addition to blue light emission. Thus, a light emitting diode has begun to be used in a variety of fields. In particular, as white light emission is realized, the use of the light emitting diode is expanded to an illumination device as well as a backlight for a liquid crystal display.

[4] However, since the direction of light emitted by a light emitting diode is random, the light should be induced in a desired direction to be used as an illumination device and a backlight. To induce light in the prior art, as shown in Fig. 1a, a luminescent chip 11 is mounted on a substrate 10, molding is performed to form a convex lens 12 over the luminescent chip 11, and a pattern 13 for diffused reflection is formed on the surface of the convex lens 12 so that light can be spread widely. As shown in Fig. 1b, reflection cups 14 are formed at both sides of the luminescent chip 11 to enhance focusing of light. Since the aforementioned luminescent device mainly emits light forward rather than sideward, there is a problem in that it is difficult to apply the luminescent device to a backlight which should widely emit light sideward.

[5] Accordingly, studies on development of a device capable of emitting light in side directions of a lens have been actively conducted using the total internal reflection (TIR) property of light. Conventional lenses using TIR are disclosed in U.S. Patent Nos. 6,679,621, 6,607,286 and 6,598,998. In the patents, a lens comprises a total reflection surface which is formed on the lens and has a predetermined slope, and a plurality of refractive surfaces which have different slopes and through which light reflected by the total reflection surface is emitted to the outside. Since the conventional

lens has the plurality of refractive surfaces formed on right and left sides of the total reflection surface, there is a problem in that a process of fabricating the lens is complicated and fabricating costs increase. That is, there are the following problems: if a lens is fabricated using a mold, upper and lower mold parts and right and left mold parts are required; and if a lens is fabricated by means of a casting or grinding method, it cannot be easily fabricated in view of its shape.

Disclosure of Invention

Technical Problem

[6] Accordingly, the present invention is conceived to solve the aforementioned problems. An object of the present invention is to provide a side illumination lens, which comprises a total internal reflection surface with a total reflection slope and a linear and/or curved refractive surface(s) extending therefrom, thereby achieving side luminescence, facilitating a fabricating process thereof and reducing fabricating costs, and a luminescent device using the side illumination lens.

Technical Solution

[7] The present invention provides a lens comprising a body, a total reflection surface with a total reflection slope with respect to a central axis of the body, and a linear and/ or curved refractive surface(s) formed to extend from a periphery of the total reflection surface.

[8] Here, the refractive surface may comprise a linear refractive surface formed by being bent at the periphery of the total reflection surface, and a curved refractive surface formed to extend from a periphery of the linear refractive surface. Alternatively, the refractive surface may comprise a curved refractive surface formed to extend from the periphery of the total reflection surface, and a linear refractive surface formed by being bent at a periphery of the curved refractive surface.

[9] Preferably, the curved refractive surface takes the shape of an ellipse, and a ratio of minor and major axes of the ellipse is 1:4 or less. The linear refractive surface may be bent more than once.

[10] The total reflection surface may comprise a first total reflection surface having a section in the form of a V-shaped recess with a predetermined slope, and a second total reflection surface extending upward from a periphery of the first total reflection surface and formed to be sloped with a gradient smaller than that of the first total reflection surface.

[11] The refractive index of the body may be 1.2 to 2.0.

[12] The present invention provides a luminescent device comprising a package housing with an opening and a through-hole exposed by the opening; a lead terminal having an inner portion exposed within the opening of the package housing and an outer portion

extending from the inner portion and protruding to the outside of the package housing; a heat sink coupled to a lower portion of the package housing and having a portion exposed through the opening; and a lens including a total reflection surface encapsulating the package housing and having a total reflection slope, and a refractive surface formed to extend from a periphery of the total reflection surface.

[13] Here, the package housing may comprise first and second housings mutually coupled to each other with the lead terminal interposed therebetween, and the opening may be formed in the first housing.

[14] The heat sink may comprise a heat sink body corresponding to a bottom surface of the package housing, and an insertion projection protruding upward from a central portion of the heat sink body and inserted into the through-hole of the package housing. At this time, the heat sink may have a coupling projection on at least one side of the heat sink body and the insertion projection.

[15] The present invention provides a luminescent device comprising a heat sink support ring; a heat sink inserted into the support ring; at least two lead terminals arranged at both sides of the support ring while being spaced apart from the support ring and the heat sink; a package body that molds and supports the heat sink and the lead terminals, and has an opening through which an upper portion of the heat sink and portions of the lead terminals are exposed; and a lens including a total reflection surface encapsulating the package body and having a total reflection slope, and a refractive surface formed to extend from a periphery edge of the total reflection surface.

[16] Here, the heat sink may have a base and a projection protruding upward from the base at the center thereof, and the projection is inserted into the support ring.

[17] The heat sink may further comprise a support ring-receiving groove in a side surface of the projection so that the support ring-receiving groove can be fastened to the support ring. The package body may be a plastic resin body formed by insert-molding a thermosetting or thermoplastic resin after the heat sink is inserted into the support ring.

Advantageous Effects

[18] As described above, according to the present invention, a lens with total internal reflection surfaces with different slopes, and a linear and/or curved refractive surface(s) allows light emitted forward from a luminescent chip to be guided to a side of the lens.

[19] Further, a linear surface(s) formed in a direction perpendicular or parallel to a central axis of a lens and a curved surface are formed on an edge of the lens so that a process of fabricating the lens is facilitated, thereby reducing a defective rate and

fabrication costs of the lens.

[20] Moreover, it is possible to provide a luminescent device employing a heat sink to exhibit superior heat dissipation property, thereby obtaining high output of light.

[21] Furthermore, after a heat sink is fixed to a frame, a package body can be formed using an insert molding technique, so that a luminescent device with a structure in which lead terminals and the heat sink are mutually coupled to each other can be easily fabricated.

[22] In addition, it is possible to provide a frame that allows a heat sink to be fixed before a package body is formed, so that fabrication of a luminescent device is facilitated.

[23] Further, there is an advantage in that a large quantity of luminescent devices can be mass-produced at a high rate because a method of fabricating the luminescent devices is similar to that of conventional top luminescent devices.

Brief Description of the Drawings

[24] Figs. 1 and 2 are sectional views of conventional luminescent devices.

[25] Fig. 3 is a conceptual view illustrating a critical angle.

[26] Fig. 4 is a sectional conceptual view of a luminescent device with a lens according to a first embodiment of the present invention.

[27] Fig. 5 is a plan view of the lens according to the first embodiment.

[28] Fig. 6 is a conceptual view illustrating the operation of the total internal reflection lens according to the first embodiment.

[29] Fig. 7 is a graph showing simulation results of the luminescent device with the lens according to the first embodiment.

[30] Figs. 8 and 9 are graphs showing experimental measurement results.

[31] Fig. 10 shows plan and side views of an external frame for use in mass-producing a luminescent device according to a first modification of the embodiment.

[32] Fig. 11 is an exploded perspective view illustrating a luminescent device with a heat sink according to the first modification.

[33] Fig. 12 shows enlarged plan and side views illustrating a state where the luminescent device with the heat sink according to the first modification is formed in an external frame.

[34] Figs. 13 (a) and (b) are top and bottom perspective views of the luminescent device according to the first modification.

[35] Figs. 14 (a) and (b) and Figs. 15 (a) to (c) are sectional views of the luminescent device according to the first modification.

[36] Fig. 16 is a perspective view illustrating a lead frame for use in mass-producing a luminescent device according to a second modification of the embodiment.

[37] Fig. 17 is a flowchart illustrating a method of fabricating the luminescent device according to the second modification.

[38] Figs. 18 to 28 are perspective views illustrating the method of fabricating the luminescent device in accordance with the flowchart.

[39] Fig. 29 is a conceptual sectional view of a luminescent device with a lens according to a second embodiment of the present invention.

[40] Fig. 30 is a perspective view of the lens according to the second embodiment.

[41] Fig. 31 is a conceptual view illustrating the operation of the total internal reflection lens according to the second embodiment.

[42] Fig. 32 is a graph showing simulation results of the luminescent device according to the second embodiment.

[43] Fig. 33 is a conceptual sectional view of a luminescent device with a lens according to a third embodiment of the present invention.

[44] Fig. 34 is a perspective view of the lens according to the third embodiment.

[45] Fig. 35 is a conceptual view illustrating the operation of the total internal reflection lens according to the third embodiment.

[46] Fig. 36 is a graph showing simulation results of the luminescent device according to the third embodiment.

[47] Fig. 37 is a conceptual sectional view of a luminescent device with a lens according to a fourth embodiment of the present invention.

[48] Fig. 38 is a perspective view of the lens according to the fourth embodiment.

[49] Fig. 39 is a conceptual view illustrating the operation of the total internal reflection lens according to the fourth embodiment.

[50] Fig. 40 is a graph showing simulation results of the luminescent device according to the fourth embodiment.

[51] Fig. 41 is a conceptual sectional view of a luminescent device with a lens according to a fifth embodiment of the present invention.

[52] Fig. 42 is a perspective view of the lens according to the fifth embodiment.

[53] Fig. 43 is a conceptual view illustrating the operation of the total internal reflection lens according to the fifth embodiment.

[54] Fig. 44 is a graph showing simulation results of the luminescent device according to the fifth embodiment.

Best Mode for Carrying Out the Invention

[55] Hereinafter, preferred embodiments of the present invention will be described in detail with reference to the accompanying drawings. However, the present invention is not limited to the embodiments but may be implemented into different forms. These embodiments are provided only for illustrative purposes and for full understanding of

the scope of the present invention by those skilled in the art. Throughout the drawings, like elements are designated by like reference numerals.

[56] Fig. 3 is a conceptual view illustrating a critical angle.

[57] Referring to Fig. 3, the critical angle refers to the the smallest incidence angle θ_c of at which total internal reflection occurs at a refractive boundary when light travels from a material with a high refractive index n1 to another material with a low refractive index n2. That is, if light meets and is refracted on the other material (n2< n1) as shown in Fig. 3 (b), the incidence angle that results in a refraction angle of 90 degrees is referred to as the critical angle. At this time, the incidence angle refers to an angle θ_{c1} measured with respect to the normal at the refractive boundary. If an incidence angle is greater than the critical angle, total internal reflection occurs.

[58] In a case where light is vertically incident from one medium n1 on another medium n2 in the two different media (n2<n1) as shown in Fig. 3 (b), if a boundary surface of the medium n1 has a certain slope, an angle defined between the incident light and the normal perpendicular to the boundary surface becomes greater than the critical angle ($\theta_{c2}>\theta_{c1}$). As a result, the light is not transmitted through the other medium n2 after passing through the medium n1 but is reflected toward the inside of the medium n1. With the use of the total internal reflection phenomenon of light, the light is not transmitted but reflected even on a transparent surface. Here, one of the media may be a material with superior transmittancy, and the other medium may be air.

[59] <Embodiment 1>

[60] Fig. 4 is a sectional conceptual view of a luminescent device with a lens according to a first embodiment of the present invention, Fig. 5 is a plan view of the lens according to the first embodiment, Fig. 6 is a conceptual view illustrating the operation of the total internal reflection lens according to the first embodiment, Fig. 7 is a graph showing simulation results of the luminescent device with the lens according to the first embodiment, and Figs. 8 and 9 are graphs showing experimental measurement results.

[61] Referring to Figs. 4, 5 and 6, the luminescent device with the lens according to this embodiment comprises a substrate 100; a luminescent chip 110 mounted on the substrate 100; and a lens that encapsulates the luminescent chip 110 and has a V-shaped first total reflection surface 121 with a predetermined slope with respect to a central axis, a second total reflection surface 122 extending outward therefrom with a slope smaller than that of the first total reflection surface 121, and a curved refractive surface 123 extending downward from a periphery of the second total reflection surface 122. Here, it is preferred that the curved refractive surface be in the form of a part of an ellipse.

[62] First, the aforementioned lens of this embodiment will be described below.

[63] The first total reflection surface 121 is made in the form of a V-shaped recess over the luminescent chip 110, the curved refractive surface 123 is formed to be rounded downward from the periphery of the second total reflection surface 122, and the second total reflection surface 122 is formed to be inclined upward between the recess and a periphery of the refractive surface 123. Assuming that the height T of the entire lens 120 is 1 as shown in Fig. 4, the height T2 of the first reflection surface 121 is 1/4 to 1/2, and the height T1 of the second reflection surface 122 is 1/4 to 1/2. As shown in the figure, the height of the refractive surface is the same as the entire lens. Assuming that the diameter C of the entire lens 120 is 1 as shown in Fig. 5, the maximum diameter A of the first reflection surface 121 is 1/8 to 1/3, and the maximum diameter B of the second reflection surface 122 is 1/6 to 1/2.

[64] Further, it preferred that the curved refractive surface 123 be made in the form of an ellipse and a ratio of minor and major axes of the ellipse be in a range of 1:2 to 1:4. More preferably, the ratio of the minor and major axes is 1:3.

[65] At this time, as described above, each of the slopes of the reflection surfaces 121 and 122 should be set such that an angle defined by the total reflection surface and light emitted from the luminescent chip 110 and incident on the total reflection surface becomes greater than a critical angle. That is, since the critical angle varies depending on a refractive index of the lens 120, the lens 120 of this embodiment is made of a material with a refractive index of 1.2 to 2.0 so hat the critical angle becomes 30 to 60 degrees.

[66] As such, in order that the angle defined by the total reflection surface and light incident on the total reflection surface 121 or 122 becomes greater than the critical angle, this embodiment is implemented such that the slope of the first reflection surface 121 is 30 to 89 degrees, and the slope of the second reflection surface 122 is 20 to 60 degrees. At this time, the slopes refer to angles defined by the first and second reflection surfaces 121 and 122 and the lower substrate 100. Preferably, the slope of the first reflection surface 121 is 40 to 70 degrees and the slope of the second reflection surface 122 is 30 to 50 degrees.

[67] Accordingly, as shown in Fig. 6, light that is incident from a light source (luminescent chip) in a range of ±40 to ±45 with respect to an x-axis direction (vertical direction) is totally reflected on the first and second total reflection surfaces 121 and 122 toward sides of the lens 120 (in a horizontal direction), and then emitted in a y-axis direction through the single elliptical refractive surface 123. Meanwhile, light that is incident out of the range of ±40 to ±45 degrees with respect to the x-axis direction is immediately refracted through the curved refractive surface 123 and then emitted in the y-axis direction. In this embodiment, based on about 42 degrees, light is totally reflected on the total reflection surfaces 121 and 122 and then emitted through the

refractive surface at the side of the lens, or the light is emitted through the refractive surface without passing through the total reflection surfaces 121 and 122.

[68] As such, the lens 120 of the present invention is constructed to have the total reflection surfaces with different slopes with respect to a central axis and the curved refractive surface 123 at the periphery of the lens, so that a peak value of luminous intensity is located in a range of ±10 with respect to ±80 as shown in Figs. 7,8 and 9. Further, the luminous intensity at zero degree is minimized to be 0 to 20% of the peak value. Preferably, it is minimized to be 5 to 10% of the peak value.

[69] In Fig. 7, a simulation was made on condition that a lens 120 with a refractive index of 1.5 was used, an angle defined by the first total reflection surface 121 and light emitted from the luminescent chip 110 was about 50 degrees, which was greater than the critical angle, and an angle defined by the second total reflection surface 122 and light emitted from the luminescent chip 110 was about 43 degrees. Then, luminous intensity was measured in a range of +90 to -90 degrees with respect to a region where the luminescent chip was located. The simulation results are shown in the graph. As shown in the graph of Fig. 7, the luminous intensity is the highest in the vicinity of ±80 degrees. That is, the luminous intensity is about 0.93 at -80 degrees and about 0.96 at +78 degrees. The luminous intensity is not greater than 0.1 in a range of ±40 degrees.

[70] In Fig. 8, an experiment was performed on condition that a lens 120 with a refractive index of 1.5, an angle defined by the first total reflection surface 121 and light emitted from the luminescent chip 110 was about 50 degrees, which was greater than the critical angle, and an angle defined by the second total reflection surface 122 and light emitted from the luminescent chip 110 was about 43 degrees. Then, luminous intensity was measured in a range of +90 to -90 with respect to a region where the luminescent chip was located. The experimental results are shown in the graph. In Fig. 9, the results are shown in polar coordinates. As shown in the graphs of Figs. 8 and 9, the luminous intensity is the highest in the vicinity of ±75 degrees with respect to the luminescent chip, i.e., a luminescent device. That is, the luminous intensity is about 1 at -74 degrees and about 0.99 at +78 degrees. The luminous intensity is not greater than 0.1 in a range of ±20 degrees and not greater than 0.2 in a range of ±40 degrees.

[71] This is because light totally reflected on the first and second reflection surfaces 121 and 122, and light refracted through the refractive surface 123 travels in the side direction of the luminescent device.

[72] The aforementioned lens 120 of the present invention may be fabricated through an injection molding process or through a grinding process of grinding a top surface of the lens 120 with an elliptical contour. In the case where the lens of the present invention is fabricated by means of such fabricating methods, since the lens has a refractive surface in the form of a single elliptical refractive surface, the lens can be easily

fabricated, thereby reducing a defective rate and fabricating costs. In addition, as compared with the aforementioned prior art in which a plurality of refractive surfaces of a lens have their slopes over certain distances, resulting in a large size, the present invention enables improvement of side illumination effects and fabrication of a lens with a compact size since the lens has a single refractive surface in the form of an ellipse.

[73] Further, the conventional lens has the refractive surfaces in the form of sawteeth indented toward a central axis, but the lens of the present invention has the refractive surface formed to extend outward from the periphery of the total reflection surface.

[74] All types of luminescent chips for emitting light through PN junction can be used as the luminescent chip 110, and a plurality of luminescent chips 110 may be mounted on the substrate.

[75] A first modification of a luminescent device including the lens according to the aforementioned first embodiment will be described below with reference to the accompanying drawings.

[76] Fig. 10 shows plan and side views of an external frame for use in mass-producing a luminescent device according to the first modification of the embodiment, Fig. 11 is an exploded perspective view illustrating a luminescent device with a heat sink according to the first modification, and Fig. 12 shows enlarged plan and side views illustrating a state where the luminescent device with the heat sink according to the first modification is formed in an external frame.

[77] As shown in Fig. 10, the external frame 201 for use in fabricating luminescent devices according to this modification is formed with a plurality of unit bodies each of which comprises lead terminals 200 and connection terminals 210 at a predetermined interval. The lead terminals 200 are formed in pairs integrally with the connection terminals 210, and the connection terminals 210 are formed as a symmetric structure to define a hollow portion 240 with a predetermined shape on a central axis. For the sake of easy description of the structure of the lead terminal, the lead terminal 200 and the connection terminal 210 are described as separate members. However, the term "lead terminal" may be used to express a meaning including both the lead terminal 200 and the connection terminal 210.

[78] Further, as described above, the connection terminals 210 defining the hollow portion 240 are supported by panel supports 220 to be fixed to the external frame 201, and the panel supports perform the function of fixing the positions of the connection terminals 210 when first and second package housings 300 and 310 to be described later are fixed.

[79] In the meantime, although the hollow portion 240 formed at the center of the symmetric connection terminals 210 has a hexagonal shape in this modification, it may

take the shape of a circle or a polygon with more than four sides.

[80] After the external frame 201 for use in fabricating the luminescent device according this modification is formed as such, the first and second package housings 300 and 310, and a heat sink 330 are sequentially secured thereto to form a structure shown in Fig. 11.

[81] That is, the first package housing 300 with a predetermined shape (rectangular shape) is located on the top of the pair of connection terminals 210 formed integrally with the lead terminals 200 in the external frame 201, and the second package housing 310 is located on the bottom of the connection terminals 210. Further, the lens 120 with the total reflection surfaces 121 and 122 and the refractive surface 123 according to the embodiment is fixed on the first package housing 300.

[82] The first package housing 300 is recessed at a central portion thereof to contain an encapsulant and has a through-hole 380 for exposing the hollow portion 240 and terminal portions of the connection terminals 210 at the bottom thereof. Although the through-hole 380 has the same area as the recessed portion, it may have an area smaller than that of the recessed portion as shown in the figure. The recessed portion and the through-hole 380 form an opening portion of the package housing. A stepped portion 390 is formed in an inner surface of the recessed portion to contain the encapsulant, which will be described later, for a luminescent device.

[83] An upper surface of the second package housing 310 is formed with receiving grooves 320 that have the same shape as the connection terminals 210 to receive the connection terminals 210 therein, and a lower surface of the second package housing 310 is formed with a heat sink-seating grooves 370 into which the heat sink 330 to be described later can be inserted.

[84] Further, a circular through-hole 350 is formed at the center of the second package housing 310 to receive an insertion projection 340 of the heat sink 330 therein, and an inner space of the insertion projection 340 becomes a luminescent chip-seating portion 360 in which a luminescent chip 400 to be described later will be fixedly seated.

[85] Meanwhile, the first and second package housings 300 and 310 in the present invention can be made of materials such as thermal conductive plastics or high thermal conductive ceramics. The thermal conductive plastics include acrylonitrile butadiene styrene (ABS), liquid crystalline polymer (LCP), polyamide (PA), polyphenylene sulfide (PPS), thermoplastic elastomer (TPE) and the like. The high thermal conductive ceramics include alumina (Al_2O_3), silicon carbide (SiC), aluminum nitride (AlN) and the like. Among the ceramics, aluminum nitride (AlN) has properties equivalent to those of alumina and is superior to alumina in view of thermal conductivity. Thus, aluminum nitride has been widely used in practice.

[86] In a case where the material of the first and second package housings 300 and 310

is thermal conductive plastics, the first package housing 300 and the second package housing 310 are respectively located on the top and bottom of the connection terminals 210 symmetrically formed in the external frame 201, and then fixedly attached thereto through compression at high temperature. Here, it is important to consider the shape of the through-hole 380 and the stepped portion 390, which are formed within the first package housing 300. That is, the through-hole 380 and the stepped portion 390 are formed by locating the first and second package housings 300 and 310 on the top and bottom of the external frame 201 and by pressing them using a pressing means with a projection, which takes the shape corresponding to the shape of the though-hole 380 and the stepped portion 390, at high temperature.

[87] Meanwhile, in a case where the material of the first and second package housings 300 and 310 is ceramics, the first package housing 300 and the second package housing 310 are fabricated in advance to have an accurate size and shape. That is, since the ceramics cannot be formed into a desired shape in a final application step due to its property by which the ceramics is formed into a desired shape at a high temperature of greater than 1000°C, the first and second package housings 300 and 310 are fabricated in advance to have a precise size and shape. At this time, the through-hole 380 and the stepped portion 390 should be formed in the first package housing 300 to be fabricated.

[88] Therefore, the ceramic first and second package housings 300 and 310 fabricated in advance as described above are respectively located on the top and bottom of the connection terminals 210 of the external frame 201, and then fixedly attached thereto using an adhesive with high adhesive strength.

[89] A luminescent device to be assembled into the external frame 201 fabricated as above is formed on each of the unit bodies each of which comprises the lead terminals 200 formed in the external frame 201 and the connection terminals 210 formed in the symmetrical manner integrally with the lead frames, as shown in Fig. 12.

[90] Further, at least one luminescent chip 400 is fixedly attached to the luminescent chip-seating portion 360 at the center of the heat sink 330 constituting the luminescent device formed as described above, and the luminescent chip is electrically connected to the connection terminals 210 through connection wires 420.

[91] Further, a zener diode 410 can be mounted in the luminescent chip-seating portion 360 and then connected, with polarity matching, to the mounted luminescent chip 400 through the connection wire 420 so as to electrically protect the luminescent chip 400. The zener diode 410 is a semiconductor device using a phenomenon in which when a relatively high reverse voltage is applied to a p-n or n-p junction of a semiconductor, a high current is started to rapidly flow with a certain voltage, and the voltage is sustained to be constant. If the zener diode 410 is applied to the luminescent device, a constant voltage can be sustained even though static electricity or a sudden current is

supplied, thereby enhancing reliability of a product.

[92] Figs. 13 (a) and (b) are top and bottom perspective views of the luminescent device according to this modification, and Figs. 14 (a) and (b) and Figs. 15 (a) to (c) are sectional views of the luminescent device according to this modification.

[93] A plurality of luminescent devices according to this modification are formed in the external frame 201 through the aforementioned fabricating process, and each of the formed luminescent devices is cut and withdrawn from the external frame 201 around the first and second package housings 300 and 310.

[94] In the withdrawn luminescent device of the present invention, as shown in Fig. 13, the lead terminals 200 are bent by a predetermined length and at a predetermined angle to match with connection terminals on a PCB substrate.

[95] As shown in Figs. 13 (b) and 14, the heat sink 330 of the luminescent device according to the present invention is fixed to the bottom of the second package housing 310 while being inserted upward thereinto, such that it protrudes beyond the lower surface of the second package housing 310. That is, this is because the surface of the heat sink 330 protruding downward beyond the lower surface of the second package housing 310 is intended to come into direct contact with a heat dissipation member (not shown) so as to maximize heat dissipation effects when the luminescent device is fabricated and applied in practice.

[96] Further, as shown in Fig. 14, stepped portions 390a and 390b (collectively designated by 390) are doubly formed within the inner space of the first package housing 300, so that they can be used as fixing steps required for molding the encapsulant to be described later or for mounting the lens 120 with the total reflection surfaces and the refractive surface according to this embodiment.

[97] Further, an outer surface of the insertion projection 340 of the heat sink 330 co nstituting the luminescent device is formed with a latching step 340a to be fixedly inserted into a groove formed in a wall defining the through-hole 350 in the second package housing 310, so that the insertion projection 340 of the heat sink 330 can be firmly fixed to the through-hole 350 of the second package housing 310. The latching step 340a may be formed on the body of the heat sink. The latching step 340a may be formed at an edge of an uppermost portion of the insertion projection 340 of the heat sink 330. At this time, the latching step 340a is coupled to the upper surface of the second package housing 310, thereby fixing the heat sink 330.

[98] Meanwhile, in the luminescent device according to this modification, the encapsulant 450 for protecting the luminescent chip 400 and the connection wires 420 while transmitting light emitted from the luminescent chip 400 is molded within the inner space of the first package housing 300.

[99] As shown in Fig. 15 (a), the encapsulant 450 may be epoxy resin and contain a

fluorescent substance for converting light emitted from the luminescent chip 400.

[100] In addition, the encapsulant 450 may contain a diffusing substance for uniform distribution of light.

[101] Further, as shown in Fig. 15 (b), if the encapsulant 450 is epoxy resin containing a fluorescent substance, the encapsulant may be further molded with the epoxy resin 470 on the top thereof to obtain more stable molding effects.

[102] Further, as shown in Fig. 15 (c), the luminescent device is molded with the encapsulant 450 as shown in Figs. 15 (a) and (b), and the lens 120 with the total reflection surfaces 121 and 122 and the refractive surface 123 according to the present invention is then fixed to the upper stepped portion 390b of the first package housing 300 to ensure side luminescence and to more stably protect the internal, mounted objects (luminescent chip and bonding wires).

[103] Although the molding with the encapsulant and the subsequent fixing of the lens have been described in the above, this modification is not limited thereto. The encapsulant and the lens may be formed integrally with each other. That is, the encapsulant may be formed with total reflection surfaces and a refractive surface on the top thereof so that it can function as the lens of the present invention, or the lens may also be used as the encapsulant.

[104] A luminescent device including the lens of the embodiment in accordance with a second modification will be described below with reference to the accompanying drawings.

[105] Fig. 16 is a perspective view illustrating a lead frame for use in mass-producing the luminescent device according to the second modification of the embodiment, Fig. 17 is a flowchart illustrating a method of fabricating the luminescent device according to this modification, and Figs. 18 to 21 are perspective views illustrating the method of fabricating the luminescent device in accordance with the flowchart.

[106] First, a lead frame in this modification will be described with reference to Fig. 16.

[107] Referring to Fig. 16, the lead frame 500 has a heat sink support ring 530 into which a heat sink can be inserted thereinto. The support ring 530 may be in the form of a circular ring as shown in the figure. However, it is not limited thereto but may be in the form of a polygonal ring.

[108] In the meantime, an external frame 510 surrounds the support ring 530. The external frame 510 is located to be spaced apart from the support ring 530. The external frame 510 may be in the form of a square as shown in the figure. However, it is not limited thereto but may be in the form of a circle or other polygons.

[109] The external frame 510 and the support ring 530 are connected by at least two connection terminals 550a and 550b. The connection terminals 550a and 550b are located on both opposite sides of the external frame 510 and fix the support ring 530 to

the external frame 510. Additional connection terminals except the connection terminals 550a and 550b may connect the support ring 530 to the external frame 510.

[110] Further, at least two lead terminals 570a, 570b, 570c, 590a, 590b and 590c extend toward the support ring 530 from the external frame 510. However, the lead terminals are spaced apart from the support ring 530. As shown in the figure, the lead terminals 570a, 570b, 570c, 590a, 590b and 590c have wider distal ends in the vicinity of the support ring 530. Meanwhile, it is preferred that the lead terminals be arranged on both opposite sides of the external frame 510.

[111] The number of required lead terminals is determined depending on the kinds and number of luminescent chips to be mounted and bonding wire-connecting methods. However, it is preferred that the lead frame 500 have a large number of lead terminals to be used in a variety of cases. As shown in the figure, the lead terminals are arranged in a direction perpendicular to the connection terminals 550a and 550b, so that a large number of lead terminals can be arranged in an identical direction.

[112] The lead frame 500 according to an embodiment of the present invention can be fabricated by pressing a plate made of phosphor bronze, which is a copper alloy, using a press die. Meanwhile, although one lead frame 500 is shown in Fig. 16, a plurality of lead frames 500 may be fabricated and arranged in one phosphor bronze plate. In particular, a plurality of lead frames 500 fabricated in one phosphor bronze plate are used for mass production of the luminescent device.

[113] Referring to Fig. 17, the lead frame 500 described above with reference to Fig. 16 is prepared (S01).

[114] As described above, the lead frame 500 can be fabricated by pressing a phosphor bronze plate, and a plurality of lead frames 500 can be fabricated and arranged in one phosphor bronze plate.

[115] Referring to Figs. 17 and 18, a heat sink 600 fixedly insertable into the support ring 530 of the lead frame 500 is prepared. The heat sink 600 has a top surface on which a luminescent chip is to be mounted. It is preferred that the top surface of the heat sink 600 have a diameter smaller than the inner diameter of the support ring 530 so that the heat sink can be easily inserted thereinto and that the outer diameter of the side of the heat sink 600 be larger than the inner diameter of the support ring 530.

[116] Further, the heat sink 600 may have a support ring-receiving groove 630a enabling the heat sink to be fastened to the support ring 530. Furthermore, the support ring-receiving groove 630a may be provided as a spiral groove for facilitating the fastening thereof to the support ring 530.

[117] Meanwhile, the heat sink 600 may have a base 610 and a projection 630 protruding upwardly from the center of the base 610. At this time, the support ring-receiving groove 630a is disposed in a side surface of the projection 630. The base portion 610a

and the projection 630 may be in the form of cylinders as shown therein. However, they are not limited thereto but may be in the form of polygonal posts. Although the projection 630 can have a shape similar to an inner shape of the support ring 530, it is not limited thereto. That is, the support ring 530 may be in the form of a circular ring, and the projection 630 may be in the form of a square post.

[118] The heat sink 600 can be fabricated of a metal with high thermal conductivity or a thermal conductive resin using a press or molding technique. The heat sink 600 is fabricated using a process separate from a process of preparing the lead frame 500. Therefore, the order of the steps of preparing the lead frame 500 (S01) and the heat sink 600 (S03) may be changed, or the steps may be performed at the same time.

[119] Referring to Figs. 17 and 19, the heat sink 600 is fixedly inserted into the support ring 530 of the lead frame 500 (S05). Since the outer diameter of the side of the heat sink 600 is larger than the inner diameter of the support ring 530, the heat sink 600 can be forcibly inserted into and fixed to the support ring 530.

[120] Meanwhile, if the support ring-receiving groove 630a is formed, the support ring 530 is received in the support ring-receiving groove 630a and supports the heat sink 600. At this time, it is preferred that a portion of the support ring 530 be received in the support ring-receiving groove 630a, and the remainder thereof protrude to an outer surface of the projection 630, as shown in figure. Further, if the support ring-receiving groove 630a a spiral groove, the heat sink 600 can be screwed and fastened to the support ring 530.

[121] Referring to Figs. 17 and 20, after the heat sink 600 is fixed to the lead frame 500, a package body 700 is formed using an insert molding technique (S07). The package body 700 can be formed through insert molding with a thermosetting or thermoplastic resin.

[122] The package body 700 is formed around the heat sink 600 to support the support ring 530, the connection terminals 550a and 550b, the lead terminals 570a, 570b, 570c, 590a, 590b and 590c, and the heat sink 600. Some portions of the connection terminals and the lead terminals protrude to the outside of the package body 700. Further, the package body 700 has an opening through which an upper end of the heat sink 600 and the lead terminals are exposed.

[123] As shown in Fig. 20, some portions of the support ring 530 and the connection terminals 550a and 550b can be exposed through the opening. Accordingly, a groove is formed in the top of the package body 700. On the contrary, as shown in Fig. 21, the package body 700 can cover most portions except the upper end of the heat sink 600, and expose only some portions of the lead terminals. Thus, a plurality of sub-openings can be defined.

[124] Even in this case, it is preferred that a groove surrounded by the sidewall of the

package body be also formed at an upper portion of the package body 700, as shown in the figure.

[125] Further, the lower surface of the heat sink 600 is exposed to the outside. In addition thereto, the side of the base portion 610 may also be exposed. Accordingly, heat dissipation through the heat sink 600 can be promoted.

[126] Meanwhile, although the package body 700 can take the shape of a cylinder, as shown in Figs. 20 and 21, it is not limited thereto but may be the shape of a polygonal post such as a square post.

[127] After the heat sink 600 is coupled to the lead frame 500, the package body 700 is formed by insert-molding a thermosetting or thermoplastic resin, so that the heat sink 600 and the package body 700 are strongly coupled to with each other.

[128] Referring to Figs. 17 and 22, portions of the connection terminals 550a and 550b, which protrude to the outside of the package body 700, are cut and removed (S09). As a result, the cut connection terminals 560a and 560b are left in the package body 700, and these connection terminals and the support ring 530 more prevent the heat sink 600 from being separated from the package body 700.

[129] In the meantime, while the connection terminals are cut, the remainder of the lead terminals except some lead terminals, which are intended to be used for applying a current, among the lead terminals protruding to the outside of the package body 700 may be cut and removed together with the connection terminals. For example, as shown in Fig. 23, in a case where only two lead terminals 570c and 590c are needed, the remainder of the lead terminals 570a, 570b, 590a and 590b are cut and removed. Further, as shown in Fig. 24, in a case where four lead terminals 570a, 570c, 590a and 590c are needed, the remainder of the lead terminals 570b and 590b are cut and removed.

[130] The process of cutting and removing the lead terminals is a process performed in a case where lead terminals of which the number is larger than that of lead terminals required in a luminescent device are provided in the lead frame 500. Thus, if the number of lead terminals required in a luminescent device is identical with that of lead terminals provided in the lead frame 500, the process of cutting and removing lead terminals is not performed. Further, since left excess lead terminals, if any, do not influence the operation of a luminescent device, the process of cutting and removing the excess lead terminals is not an inevitable process.

[131] Referring to Figs. 17 and 25, luminescent chips 800 are mounted on an upper surface of the heat sink 600 (S11). The luminescent chip 800 may be a one-bond die with an electrode on each of top and bottom surfaces thereof or a two-bond die with two electrodes on a top surface thereof.

[132] If the luminescent chip 800 is a one-bond die, it is preferred that the heat sink 600

be made of a metallic material with electric conductivity. At this time, the luminescent chip 800 is mounted on the heat sink 600 by means of an electric conductive adhesive such as silver epoxy. Otherwise, if all the luminescent chips 800 to be mounted on the heat sink 600 are two-bond dies, the heat sink 600 is not necessarily to be electrically conductive, and they may be mounted on the heat sink 600, for example, by means of various kinds of thermally conductive adhesives.

[133] In the meantime, a plurality of luminescent chips 800 may be mounted on the heat sink 600. Further, the plurality of luminescent chips 800 may be luminescent chips that can emit light with different wavelengths. For example, as shown in Fig. 25, three luminescent chips 800 can be mounted. At this time, the luminescent chips 800 may be luminescent chips for respectively emitting red, green and blue light. Accordingly, a luminescent device emitting light with all kinds of colors can be provided using the luminescent chips 800.

[134] Referring to Figs. 17 and 26, luminescent chips 810, 830 and 850 and the lead terminals 570a, 570b, 570c, 590a, 590b and 590c are electrically connected through bonding wires (S13). In a case where all the luminescent chips 810, 830 and 850 are two-bond dice, each of the luminescent chips is connected to two lead terminals through two bonding wires. Meanwhile, as shown in the figure, the luminescent chips 810, 830 and 850 can be electrically connected to different pairs of lead terminals, respectively. Moreover, one common lead terminal (e.g., 570b) and the luminescent chips can be connected through the bonding wires, and the other lead terminals (e.g., 590a, 590b, 590c) located at a side opposite to the common lead terminal can be connected to the luminescent chips through different bonding wires, respectively. In this case, the luminescent chips can be driven with different currents, respectively.

[135] Meanwhile, as shown in Fig. 27, a one-bond luminescent chip 810a and two-bond luminescent chips 830 and 850 can be mounted together. At this time, one lead terminal 570b of the lead terminals is electrically connected to the heat sink 600 through a bonding wire. Therefore, the lead terminal 570b is electrically connected to a bottom surface of the one-bond luminescent chip 810a through a bonding wire and the heat sink 600. There are various combinations of one-bond dies and two-bond dies, and one of various methods of connecting bonding wires in the combinations can be selected.

[136] Further, one of various methods of connecting lead terminals to luminescent chips can be selected, and a plurality of luminescent chips may be connected in series, in parallel or in series-parallel.

[137] In the meantime, after the luminescent chips 810, 830 and 850 and the lead terminals are connected through the bonding wires, the luminescent chips 810, 830 and 850 are encapsulated with an encapsulant (not shown) (S15). The encapsulant can en-

capsulate the luminescent chips and the bonding wires by filling the opening of the package body 700.

[138] Further, the encapsulant can contain a fluorescent substance. For example, the fluorescent substance can convert the color of light from blue into yellow, or into green and red. Thus, if a luminescent chip emitting blue light is mounted on the heat sink 600, it is possible to provide a luminescent chip emitting white light to the outside by converting some of light emitted from the luminescent chip into yellow, or green and red light. In addition thereto, the encapsulant may further contain a diffusing substance. The diffusing substance prevents the luminescent chips and the bonding wires from being viewed from the outside by dispersing light emitted from the luminescent chips, and the diffusing substance also enables light to be uniformly emitted to the outside.

[139] After the luminescent chips are encapsulated with the encapsulant, the lens 120 with the total reflection surfaces 121 and 122 and the refractive surface 123 according to this embodiment is attached on the package body 700 (S17). The lens 120 is used to emit light within a predetermined directional angle, which guides and emits light from the luminescent chip 800 toward the side of the lens in this embodiment.

[140] Although the processes of forming the encapsulant and attaching the lens have been described above as separate processes for the sake of convenience of description, it is not limited thereto, and the luminescent chips may be encapsulated directly with a lens with total reflection surfaces and a refractive surface. That is, the total reflection surfaces and the refractive surface may be formed on the top of the encapsulant.

[141] Referring to Figs. 17 and 28, the lead terminals 570a, 570b, 570c, 590a, 590b and 590c are cut from the external frame 510 and then bent (S19). As a result, a luminescent device that can be subjected to surface mounting is obtained. Meanwhile, the step of cutting and removing the connection terminals (S09) may be performed together with step S19.

[142] Next, the luminescent device of this modification will be described with reference to Fig. 28.

[143] Referring back to Fig. 28, the luminescent device includes the heat sink support ring 530. The support ring 530 is made of a copper alloy such as phosphor bronze. Although the support ring 530 can take the shape of a circular ring as shown in the figure, it is not limited thereto but may take the shape of a polygonal ring. The cut connection terminals 560a and 560b are disposed while extending from the outside of the support ring 530. The cut connection terminals 560a and 560b can be located at opposite sides of the support ring 530.

[144] As described with reference to Fig. 18, the heat sink 600 is inserted into the support ring 530.

[145] Meanwhile, at least two lead terminals 570a, 570b, 570c, 590a, 590b and 590c are arranged at the both sides of the support ring while being spaced apart from the support ring 530 and the heat sink 600. The lead terminals may be bent to enable surface mounting.

[146] In addition thereto, the package body 700 supports the heat sink 600 and the lead terminals by means of molding. The package body 700 has the opening through which the upper end of the heat sink 600 and some portions of the lead terminals are exposed at the upper portion of the package body. Meanwhile, the portions of the lead terminals protruding outward through the sidewall of the package body 700.

[147] As described with reference to Fig. 20, some portions of the support ring 530 and the connection terminals 550a and 550b can be exposed through the opening. Accordingly, the grooves are formed at the upper portion of the package body 700. Further, as described with reference to Fig. 21, the package body 700 can cover most portions except the upper end of the heat sink 600 and expose only some portions of the lead terminals. Thus, a plurality of openings can be formed. Even in this case, it is preferred that the package body 700 have the groove surrounded by the sidewall of the package body as shown in Fig. 21.

[148] The package body 700 is a plastic resin body formed by insert-molding a thermosetting or thermoplastic resin after the heat sink 600 is fixedly inserted into the support ring 530.

[149] The luminescent chips 810, 830 and 850 are mounted and located on the upper surface of the heat sink 600. Although the luminescent chips shown in Fig. 28 are two-bond dies, they are not limited thereto. The luminescent chips may be one-bond dies or a combination of one-bond and two-bond dies.

[150] The luminescent chips are electrically connected to the lead terminals through the bonding wires. In a case where the luminescent chips are two-bond dies, each of the luminescent chips is electrically connected to two lead terminals through two bonding wires. Meanwhile, in a case where at least one of the luminescent chips is a one-bond die, the heat sink is electrically connected to at least one lead terminal through a bonding wire.

[151] There are various methods of connecting the lead terminals and the luminescent chips and one of them can be selected according to characteristics of required luminescent chips.

[152] Meanwhile, the lens 120 with the total reflection surfaces 121 and 122 and the refractive surface 123 according to this embodiment covers and encapsulates the luminescent chips.

[153] As described above, the luminescent device with the lens according to this embodiment is not limited to the aforementioned modification but may be applied to

various kinds of luminescent chips.

[154] Further, the present invention is not limited to the shape of the lens according to the embodiment but may further include a linear refractive surface.

[155] A lens further comprising a horizontal linear refractive surface according to a second embodiment will be described below. In the following second embodiment, a description thereof overlapping with that of the previous embodiment will be omitted. Moreover, a description of a modification of a luminescent device with the lens will also be omitted since it overlaps with that of the previous embodiment.

[156] <Embodiment 2>

[157] Fig. 29 is a conceptual sectional view of a luminescent device with a lens according to a second embodiment of the present invention, Fig. 30 is a perspective of the lens according to the second embodiment, Fig. 31 is a conceptual view illustrating the operation of the total internal reflection lens according to the second embodiment, and Fig. 32 is a graph showing simulation results of the luminescent device according to the second embodiment.

[158] Referring to Figs. 29, 30 and 31, the lens of this embodiment comprises a first total reflection surface 1121 with a V-shaped section and a certain slope with respect to a central axis x; a second total reflection surface 1122 with a slope smaller than that of the first total reflection surface 1121; a linear first refractive surface 1123a extending from a periphery of the second total reflection surface 1122 in a direction perpendicular to the central axis x; and a curved second refractive surface 1123b extending downward from a periphery of the linear first refractive surface 1123a.

[159] As shown in Fig. 29, the first total reflection surface 1121 is formed in the shape of a V-shaped recess above a luminescent chip 1110, and the second total reflection surface 1122 is formed to extend upward from the recess and to have a gradient smaller than that of the first reflection surface 1121 with respect to the central axis x. Meanwhile, the linear refractive surface 1123a is made in the form of a straight line parallel to a substrate 1100 on which the luminescent chip 1110 is to be mounted, and the curved second refractive surface 1123b is made in the form of a downward round curve extending from the first refractive surface 1123a. Of course, the first refractive surface 1123a may be formed to be parallel to the bottom of the lens 120. The first and second refractive surfaces 1123a and 1123b refer to surfaces that refract light guided to an edge of the lens toward the side thereof.

[160] Assuming that the diameter of the entire lens 120 is 1 in the above, the first reflection surface 1121 is formed at the center of the lens 1120, and the maximum diameter of the first reflection surface 1121 is 1/12 to 1/6; the second reflection surface 1122 is formed to cover the first reflection surface 1121 and has the maximum diameter of 1/7 to 1/3; the first refractive surface 1123a is constructed in the form of a

circular strip to surround the second reflection surface 1122 and has the maximum diameter of 1/5 to 2/3; and the diameter of the second refractive surface 1123b is identical with that of the entire lens 1120. Here, the width of the circular strip-shaped first refractive surface 1123a is 1/16 to 1/8 of the diameter of the lens. Assuming that the height of the lens 1120 is 1, the height of the first reflection surface 1121 is 1/6 to 1/2, and the height of the second reflection surface 1122 is 1/6 to 1/2.

[161] The second refractive surface 1123b is made in the form of an ellipse as shown in Fig. 29, and a ratio of minor and major axes of the ellipse is in a range of 1:4 or less. That is, it may be a circle.

[162] At this time, the slope of each of the total reflection surfaces 1121 and 1122 is set such that an angle defined by the total reflection surface and light, which is emitted from the luminescent chip 1110 and is then incident on the total reflection surface, becomes greater than a critical angle, as described above. That is, since the critical angle varies depending on a refractive index of the lens 1120, the lens 1120 of this embodiment is formed of a material with a refractive index of 1.2 to 2.0 so that the critical angle can be in a range of 30 to 60 degrees.

[163] In order to cause the angle defined by the total reflection surface and light incident on the total reflection surface 1121 or 1122 to be greater than the critical angle, the slope of the first reflection surface 1121 is 30 to 89 degrees, and that of the second reflection surface 1122 is 20 to 60 degrees in this embodiment. At this time, the slopes refer to angles defined by the first and second reflection surfaces 1121 and 1122, and the lower substrate 1100. Preferably, the slope of the first total reflection surface 1121 is 40 to 70 degrees and that of the second total reflection surface 1122 is 30 to 50 degrees. Further, it is preferred that the slope of the first refractive surface 1123a be formed to be 10 degrees or less. However, it has been previously described as being in a horizontal state where its slope is zero.

[164] Accordingly, as shown in Fig. 31, light R2 and R3, which is emitted from a light source (luminescent chip) and incident on the first and second total reflection surfaces 1121 and 1122, is totally reflected, and then emerges in a y-axis direction through the rounded second refractive surface 1123b. Light R4 and R1 incident on the first and second refractive surfaces 1123a and 1123b are refracted and then emerge in the y-axis direction.

[165] As such, the lens 1120 of the present invention is formed to have the total reflection surfaces with different slopes at a central portion thereof, and the horizontal surface and the rounded surface at an edge portion thereof, so that a peak value of luminous intensity can be in a range of ±10 with respect to ±83, as shown in Fig. 32.

[166] In Fig. 32, a lens 1120 with a refractive index of 1.5 was used such that an angle defined by the first total reflection surface 1121 and light emitted from the luminescent

chip 1110 became about 50 degrees greater than the critical angle, and an angle defined by the second total reflection surface 1122 and light emitted from the luminescent chip 1110 became about 43 degrees. Then, luminous intensity was simulated in a range of +90 to -90 with respect to a region where the luminescent chip 1110 was located, and the results are shown in the graph. As shown in the graph of Fig. 32, the luminous intensity is the highest in the vicinity of ±83 degrees. That is, the luminous intensity is about 0.97 at +83 degrees and about 0.94 at -83 degrees. Further, the luminous intensity is not greater than 0.2 within ±40.

[167] This is because light totally reflected on the first and second reflection surfaces 1121 and 1122, and light refracted through the first and second refractive surfaces 1123a and 1123b travels in the side direction of the luminescent device.

[168] The lens 1120 of the present invention may be fabricated by means of an injection molding process or a grinding process of grinding a top surface of the lens 1120 with an elliptical curved surface. In a case of fabricating the lens of the present invention in this manner, since the lens is composed of the horizontal linear surface and the elliptical curved surface, its fabrication is facilitated, thereby reducing a defective rate and fabrication costs.

[169] In addition, as described in the previous embodiment, as compared with the aforementioned prior art in which a plurality of refractive surfaces of a lens have their slopes over certain distances, resulting in a large size, the present invention enables improvement of side illumination effects and fabrication of a lens with a compact size since the lens has double refractive surfaces that are in the form of a straight line and an ellipse. Further, the conventional lens has the refractive surfaces indented toward a central axis, but the lens of the present invention has the refractive surface formed to extend outward from the periphery of the total reflection surface.

[170] Although the most preferred embodiment in which the luminescent chip is encapsulated by the lens has been described in the present invention, a certain space (not shown) may be formed between the luminescent chip and the lens. At this time, a material with a refractive index of 1.2 to 2.0 can be selected as a material filled into the space. For example, the space may be filled with epoxy/silicon resin or air/another gas (e.g. nitrogen), or may be under a vacuum condition. Here, a fluorescent material can be further included in the space.

[171] Moreover, although the lens includes the linear surface and the curved surface extending therefrom, it is not limited thereto but may be modified into various shapes. That is, the lens may include a linear surface extending from a curved surface, and the linear surface may be bent. Next, a side illumination lens with a linear surface extending from a curved surface and bent once, and a luminescent device with the lens according to a third embodiment of the present invention will be described below.

[172] In the following third embodiment, a description thereof overlapping with that of the aforementioned embodiment will be omitted. Further, since a description of a modification of a luminescent device with the lens overlaps with that of the aforementioned embodiment, the description will be omitted.

[173] <Embodiment 3>

[174] Fig. 33 is a conceptual sectional view of a luminescent device with a lens according to a third embodiment of the present invention, Fig. 34 is a perspective view of the lens according to the third embodiment, Fig. 35 is a conceptual view illustrating the operation of the total internal reflection lens according to the third embodiment, and Fig. 36 is a graph showing simulation results of the luminescent device according to the third embodiment.

[175] Referring to Figs. 33, 34 and 35, the lens of this embodiment comprises a first total reflection surface 2121 with a V-shaped section and a certain slope with respect to a central axis x; a second total reflection surface 2122 with a slope smaller than that of the first total reflection surface 2121; a curved first refractive surface 2123a extending downward from a periphery of the second total reflection surface 2122; a linear second refractive surface 2123b extending from a periphery of the first refractive surface 2123a in a direction perpendicular to the central axis x; and a linear third refractive surface 2123c extending from a periphery of the second refractive surface 2123b in a direction parallel to the central axis x.

[176] As shown in Figs. 33 and 34, assuming that the diameter of the entire lens 2120 is 1, the first reflection surface 2121 is formed at a central portion of the lens 2120, and the maximum diameter of the first total reflection surface 2121 is 1/12 to 1/6; and the second reflection surface 2122 is formed to surround the first total reflection surface 2121, and the maximum diameter thereof is 1/7 to 1/3. The first refractive surface 2123a is made in the form of an ellipse surrounding the second total reflection surface 2122, and the maximum diameter thereof is 1/2 to 7/8; and the maximum diameter of the second and third refractive surfaces 2123b and 2123c is the same as the entire lens 2120. Here, the width of the second refractive surface 2123b is 1/16 to 1/8 of the diameter of the lens.

[177] Further, assuming that the height of the lens 2120 is 1, the height of the first total reflection surface 2121 is 1/12 to 1/6; the height of the second total reflection surface 2123 is 1/12 to 1/6; the height of the first refractive surface 2123a is 1/4 to 3/4; and the height of the third refractive surface 2123c is 1/4 to 3/4. Here, the first refractive surface 2123a is made in the form of an ellipse as shown in the figures, and a ratio of minor and major axes of the ellipse is formed in a range of 1:4 or less. That is, it may be a circle.

[178] Accordingly, as shown in Fig. 35, light R4 and R5, which is emitted from a light

source (luminescent chip) and is then incident on the first and second total reflection surfaces 2121 and 2122 is totally reflected, and emerges in a y-axis direction through the downward rounded second refractive surface 1123b. Light R3, R2 and R1 incident on the first, second and third refractive surfaces 2123a, 2123b and 2123c is refracted and then emitted in the y-axis direction.

[179] As such, the lens 1120 of the present invention is formed to have total the reflection surfaces with different slopes at the central portion thereof, and the rounded, horizontal and vertical surfaces at an edge thereof, so that a peak value of luminous intensity is located in a range of ±10 with respect to ±64, as shown in Fig. 36.

[180] In Fig. 36, a lens 2120 with a refractive index of 1.5 was used such that an angle defined by the first total reflection surface 2121 and light emitted from the luminescent chip 2110 became about 50 degrees greater than a critical angle, and an angle defined by the second total reflection surface 2122 and light emitted from the luminescent chip 2110 became about 43 degrees. Then, luminous intensity is simulated in a range of +90 to -90 with respect to a region where the luminescent chip 1110 was located, and the results are shown in the graph.

[181] As shown in the graph of Fig. 36, the luminous intensity is the highest in the vicinity of ±64 degrees. That is, the luminous intensity is about 0.99 at +64 degrees and about 0.98 at -64 degrees. Further, the luminous intensity is not greater than 0.2 within ±40 degrees.

[182] As described above, this is because light totally reflected on the first and second reflection surfaces 2121 and 2122, and light refracted through the first to third refractive surfaces 2123a, 2123b and 2123c travels in the side direction of the luminescent device.

[183] Since a method of fabricating the lens and a luminescent device with the lens are the same as the aforementioned embodiment, descriptions thereof will be omitted.

[184] A side illumination lens with a linear surface bent twice and a curved surface extending therefrom, and a luminescent device with the lens according to a fourth embodiment of the present invention will be described below.

[185] In the following fourth embodiment, a description thereof overlapping with that of the aforementioned embodiment will be omitted. Further, since a description of a modification of a luminescent device with the lens overlaps with that of the aforementioned embodiment, the description will be omitted.

[186] <Embodiment 4>

[187] Fig. 37 is a conceptual sectional view of a luminescent device with a lens according to a fourth embodiment of the present invention, Fig. 38 is a perspective view of the lens according to the fourth embodiment, Fig. 39 is a conceptual view illustrating the operation of the total internal reflection lens according to the fourth embodiment, and

Fig. 30 is a graph showing simulation results of the luminescent device according to the fourth embodiment.

[188] Referring to Figs. 37, 38 and 39, the lens of this embodiment comprises a first total reflection surface 3121 with a V-shaped section and a certain slope with respect to a central axis x; a second total reflection surface 3122 with a slope smaller than that of the first total reflection surface 3121; a linear first refractive surface 3123a extending from a periphery of the second total reflection surface 3122 in a direction perpendicular to the central axis x; a linear second refractive surface 3123b extending downward in parallel to the central axis x from a periphery of the first refractive surface 3123a; a linear third refractive surface 3123c extending from a periphery of the second refractive surface 3123b in the direction perpendicular to the central axis x; and a curved fourth refractive surface 3123d extending downward from a periphery of the third refractive surface 3123c.

[189] As shown in Figs. 37 and 38, assuming that the diameter of the entire lens 3120 is 1, the maximum diameter of the first total reflection surface 3121 is 1/12 to 1/6, and the maximum diameter of the second total reflection surface 3122 is 1/7 to 1/3. The maximum diameter of the first refractive surface 3123a is 1/6 to 1/2, and the width of the first refractive surface 3123a is 1/36 to 1/24 of the diameter of the lens 3120. The maximum diameter of the third refractive surface 3123c is 1/5 to 2/3, and the width of the third refractive surface 3123c is 1/24 to 1/7. The diameter of the fourth refractive surface 3123d is the same as the entire lens 3120.

[190] Further, assuming that the height of the lens 3120 is 1, the height of the first total reflection surface 3121 is 1/4 to 3/4; the height of the second total reflection surface 3122 is 1/6 to 1/4; the height of the second refractive surface 3123b is 1/12 to 1/8; and the height of the fourth refractive surface 3123d is 7/8 to 11/12. Here, the fourth refractive surface 3123d is made in the form of an ellipse as shown in the figures, and a ratio of minor and major axes of the ellipse is in a range of 1:4 or less. That is, it may be a circle.

[191] Accordingly, as shown in Fig. 39, light R2 and R6, which is emitted from a light source (luminescent chip) and is then incident on the first and second total reflection surfaces 3121 and 3122, are totally reflected, and emerges in a y-axis direction through the refractive surfaces 3123a, 3123b, 3123c and 3123d. Light R5, R4, R3 and R1 incident on the first to fourth refractive surfaces 3123a, 3123b, 3123c and 3123d are refracted and emerges in the y-axis direction.

[192] As such, the lens 120 of the present invention is formed to have the total reflection surfaces with different slopes at a central portion thereof, and the rounded surface and the plurality of horizontal and vertical surfaces at an edge thereof, so that a peak value of luminous intensity is in a range of ±10 with respect to ±76 as shown in Fig. 40.

[193] In Fig. 40, a lens 3120 with a refractive index of 1.5 was used such that an angle defined by the first total reflection surface 3121 and light emitted from the luminescent chip 3110 became about 50 degrees greater than a critical angle, and an angle defined by the second total reflection surface 3122 and light emitted from the luminescent chip 3110 became about 43 degrees. Then, luminous intensity is simulated in a range of +90 to -90 with respect to a region where the luminescent chip is located, and the results are shown in the graph.

[194] As shown in the graph of Fig. 40, the luminous intensity is the highest in the vicinity of ±76 degrees. That is, the luminous intensity is about 0.98 at +76 degrees and about 0.97 at -77 degrees. Further, the luminous intensity is not greater than 0.2 within ±40 degrees.

[195] Since a method of fabricating the lens and a luminescent device with the lens are the same as the aforementioned embodiment, descriptions thereof will be omitted.

[196] A side illumination lens with a linear surface bent once and a curved surface extending therefrom, and a luminescent device with the lens according to a fifth embodiment of the present invention will be described below.

[197] In the following fifth embodiment, a description thereof overlapping with that of the aforementioned embodiment will be omitted. Further, since a description of a modification of a luminescent device with the lens overlaps with that of the aforementioned embodiment, the description will be omitted.

[198] <Embodiment 5>

[199] Fig. 41 is a conceptual sectional view of a luminescent device with a lens according to a fifth embodiment of the present invention, Fig. 42 is a perspective view of the lens according to the fifth embodiment, Fig. 43 is a conceptual view illustrating the operation of the total internal reflection lens according to the fifth embodiment, and Fig. 44 is a graph showing simulation results of the luminescent device according to the fifth embodiment.

[200] Referring to Figs. 41, 42 and 43, the lens of this embodiment comprises a first total reflection surface 4121 with a V-shaped section and a certain slope with respect to a central axis x; a second total reflection surface 4122 with a slope smaller than that of the first total reflection surface 4121; a linear first refractive surface 4123a extending downward from a periphery of the second total reflection surface 4122 in a direction parallel to the central axis x; a linear second refractive surface 4123b extending from a periphery of the first refractive surface 4123a in the direction perpendicular to the central axis x; and a curved third refractive surface 4123c extending downward from a periphery of the second refractive surface 4123b.

[201] As shown in Figs. 41 and 42, assuming that the diameter of the entire lens 4120 is 1, the maximum diameter of the first total reflection surface 4121 is 1/12 to 1/6, and

the maximum diameter of the second total reflection surface 4122 is 1/7 to 1/3. The maximum diameter of the second refractive surface 4123b is 1/6 to 2/3, and the width of the second refractive surface 4123b is 1/12 to 1/6 of the diameter of the lens 4120. The diameter of the third refractive surface 4123c is the same as the entire lens.

[202] Further, assuming that the height of the lens 4120 is 1, the height of the first total reflection surface 4121 is 1/4 to 3/4; the height of the second total reflection surface 4122 is 1/6 to 1/4; the height of the first refractive surface 4123a is 1/12 to 1/8; and the height of the third refractive surface 4123c is 7/8 to 11/12. Here, the third refractive surface 4123c is made in the form of an ellipse as shown in the figures, and a ratio of minor and major axes of the ellipse is in a range of 1:4 or less. That is, it may be a circle.

[203] Accordingly, as shown in Fig. 43, light R2 and R4, which is emitted from a light source (luminescent chip) and is then incident on the first and second total reflection surfaces 4121 and 4122, are totally reflected, and emerges in a y-axis direction through the refractive surfaces 4123a, 4123b and 4123c. Light R5, R3 and R1 incident on the first to third refractive surfaces 4123a, 4123b and 4123c are refracted and emerges in the y-axis direction.

[204] As such, the lens 120 of the present invention is formed to have the total reflection surfaces with different slopes at a central portion thereof, and the rounded surface and the plurality of horizontal and vertical surfaces at an edge thereof, so that a peak value of luminous intensity is in a range of ±10 with respect to ±70 as shown in Fig. 44.

[205] In Fig. 44, a lens 4120 with a refractive index of 1.5 was used such that an angle defined by the first total reflection surface 4121 and light emitted from the luminescent chip 4110 became about 50 degrees greater than a critical angle, and an angle defined by the second total reflection surface 4122 and light emitted from the luminescent chip 4110 became about 43 degrees. Then, luminous intensity is simulated in a range of +90 to -90 with respect to a region where the luminescent chip is located, and the results are shown in the graph.

[206] As shown in the graph of Fig. 44, the luminous intensity is the highest in the vicinity of ±70 degrees. That is, the luminous intensity is about 1.0 at +70 degrees and about 0.97 at -70 degrees. Further, the luminous intensity is not greater than 0.2 within ±40 degrees.

Claims

[1] 1. A lens, comprising: a body;
a total reflection surface with a total reflection slope with respect to a central axis of the body; and
a linear and/or curved refractive surface(s) formed to extend from a periphery of the total reflection surface.

[2] 2. The lens as claimed in claim 1, wherein the refractive surface comprises:
a linear refractive surface formed by being bent at the periphery of the total reflection surface; and
a curved refractive surface formed to extend from a periphery of the linear refractive surface.

[3] 3. The lens as claimed in claim 1, wherein the refractive surface comprises:
a curved refractive surface formed to extend from the periphery of the total reflection surface; and
a linear refractive surface formed by being bent at a periphery of the curved refractive surface.

[4] 4. The lens as claimed in any one of claims 1 to 3, wherein the curved refractive surface takes the shape of an ellipse, and a ratio of minor and major axes of the ellipse is 1:4 or less.

[5] 5. The lens as claimed in any one of claims 1 to 3, wherein the linear refractive surface is bent more than once.

[6] 6. The lens as claimed in claim 1, wherein the total reflection surface comprises:
a first total reflection surface having a section in the form of a V-shaped recess with a predetermined slope; and
a second total reflection surface extending upward from a periphery of the first total reflection surface and formed to be sloped with a gradient smaller than that of the first total reflection surface.

[7] 7. The lens as claimed in claim 1, wherein the refractive index of the body is 1.2 to 2.0.

[8] 8. A luminescent device, comprising:
a package housing with an opening and a through-hole exposed by the opening;
a lead terminal having an inner portion exposed within the opening of the package housing and an outer portion extending from the inner portion and protruding to the outside of the package housing;
a heat sink coupled to a lower portion of the package housing and having a portion exposed through the opening ; and
a lens including a total reflection surface encapsulating the package housing and

having a total reflection slope, and a refractive surface formed to extend from a periphery of the total reflection surface.

[9] 9. The luminescent device as claimed in claim 8, wherein the package housing comprises first and second housings mutually coupled to each other with the lead terminal interposed therebetween, and the opening is formed in the first housing.

[10] 10. The luminescent device as claimed in claim 8, wherein the heat sink comprises:

a heat sink body corresponding to a bottom surface of the package housing; and an insertion projection protruding upward from a central portion of the heat sink body and inserted into the through-hole of the package housing.

[11] 11. The luminescent device as claimed in claim 10, wherein the heat sink has a coupling projection on at least one of the heat sink body and the insertion projection.

[12] 12. A luminescent device, comprising:

a heat sink support ring;

a heat sink inserted into the support ring;

at least two lead terminals arranged at both sides of the support ring while being spaced apart from the support ring and the heat sink;

a package body for molding the heat sink and the lead terminals to support them, the package body having an opening through which an upper portion of the heat sink and portions of the lead terminals are exposed; and

a lens including a total reflection surface encapsulating the package body and having a total reflection slope, and a refractive surface formed to extend from a periphery edge of the total reflection surface.

[13] 13. The luminescent device as claimed in claim 12, wherein the heat sink has a base and a projection protruding upward from the base at the center thereof, and the projection is inserted into the support ring.

[14] 14. The luminescent device as claimed in claim 13, wherein the heat sink further comprises a support ring-receiving groove in a side surface of the projection so that the support ring-receiving groove can be fastened to the support ring.

[15] 15. The luminescent device as claimed in claim 12, wherein the package body is a plastic resin body formed by insert-molding a thermosetting or thermoplastic resin after the heat sink is inserted into the support ring.

[Fig. 1]

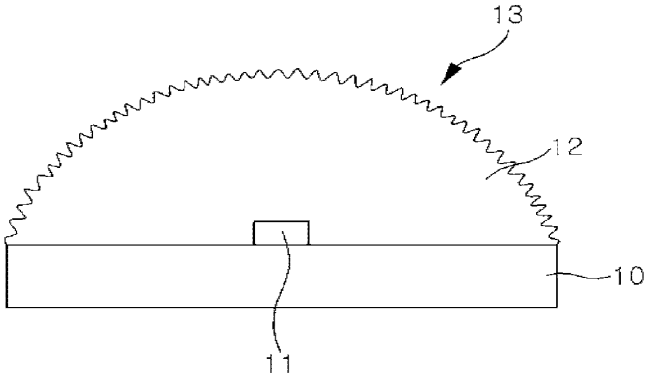

[Fig. 2]

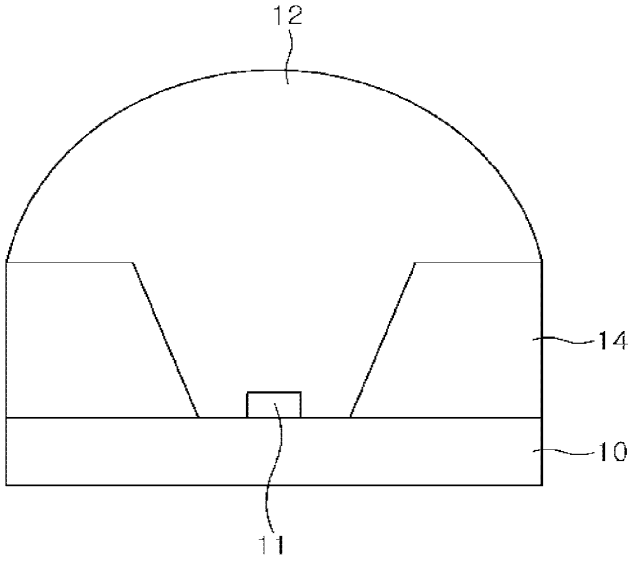

[Fig. 3]

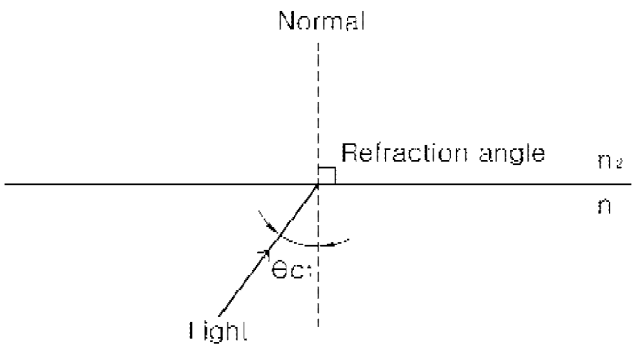
Normal
Refraction angle
n2
n
θc1
Light

(a)

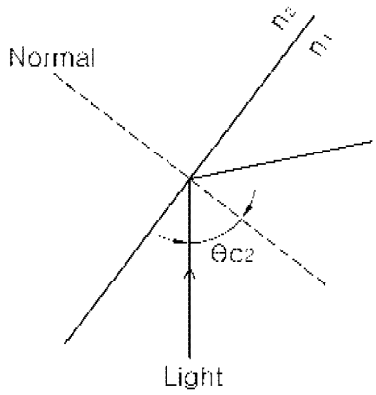
Normal
n2
n1
θc2
Light

(b)

[Fig. 4]

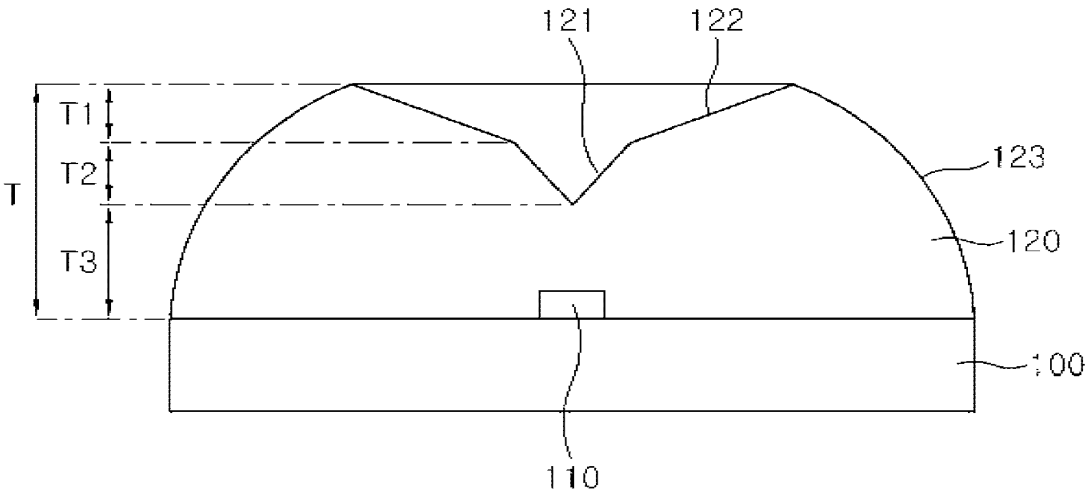
121
122
T1
T2
T
T3
123
120
100
110

[Fig. 5]

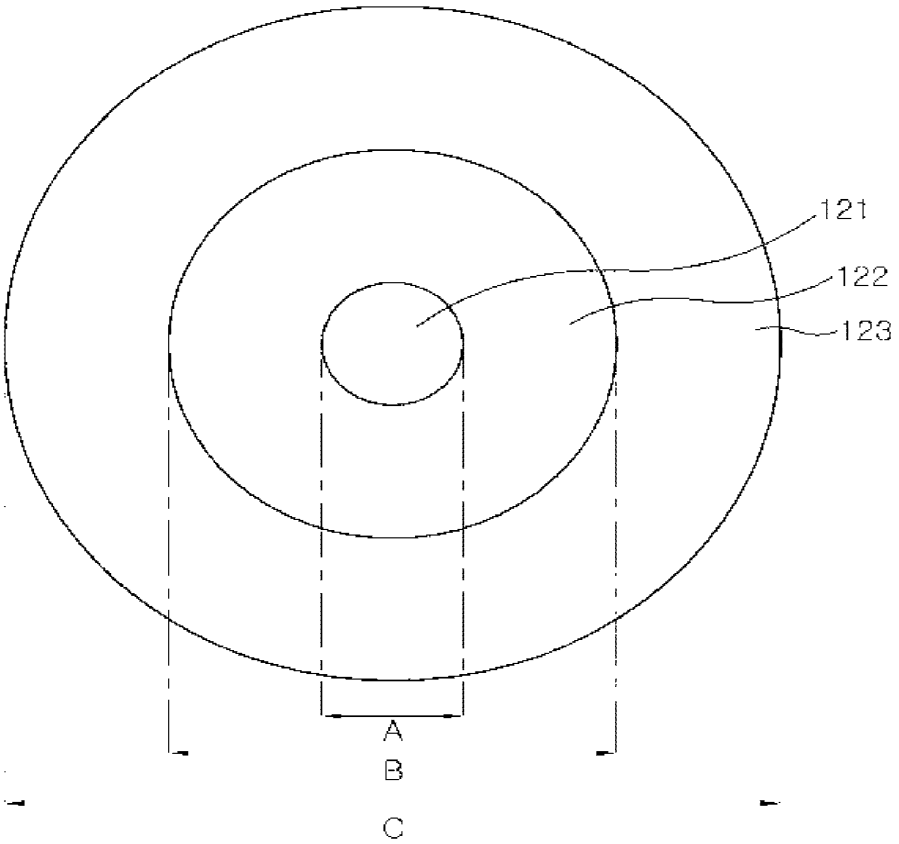

[Fig. 6]

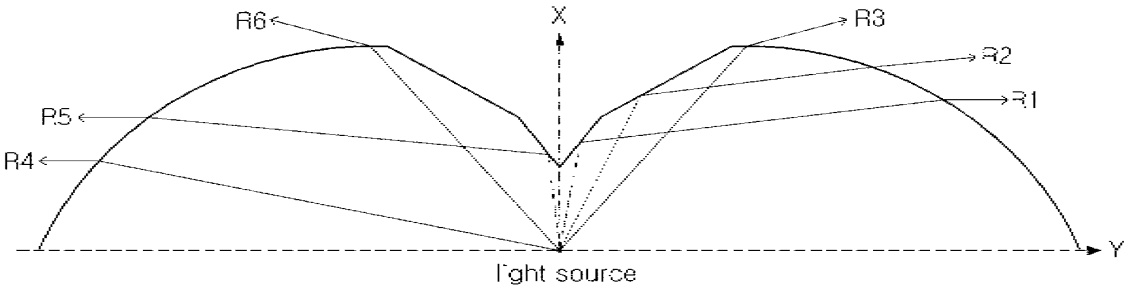

[Fig. 7]

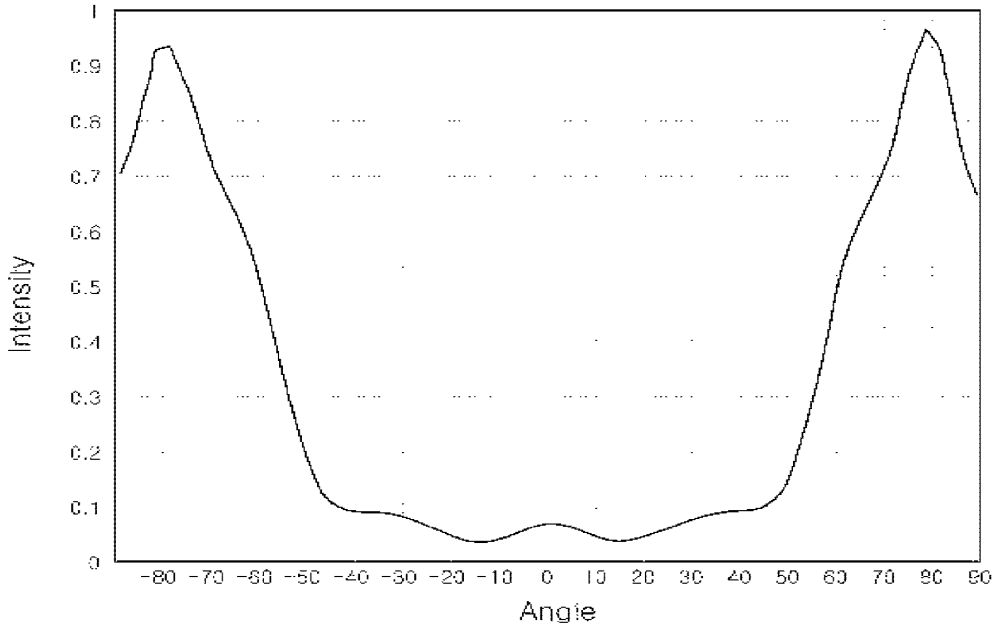

[Fig. 8]

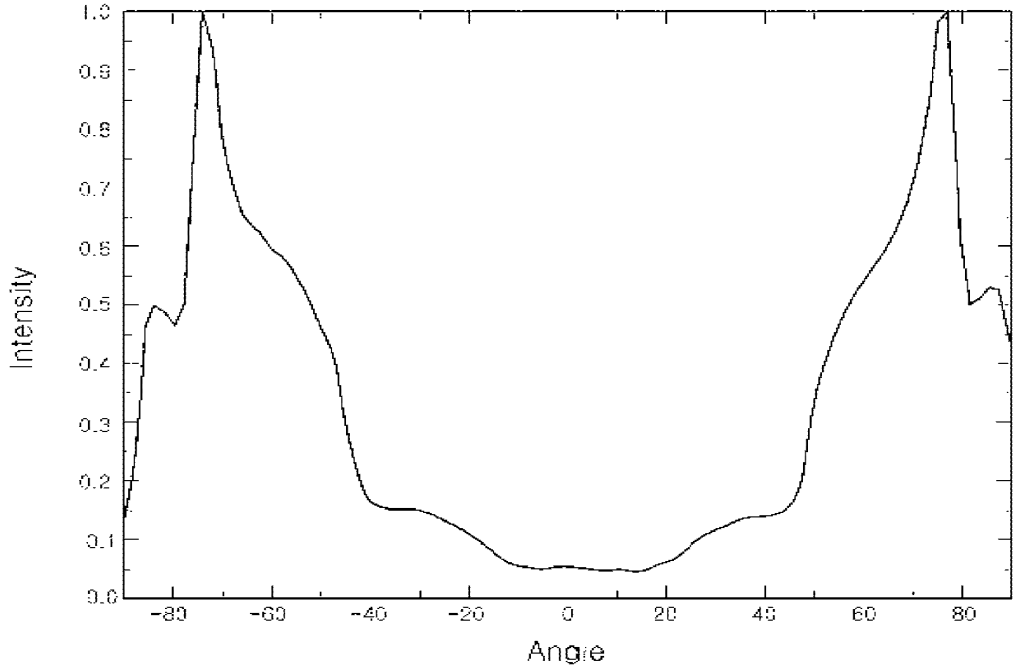

[Fig. 9]

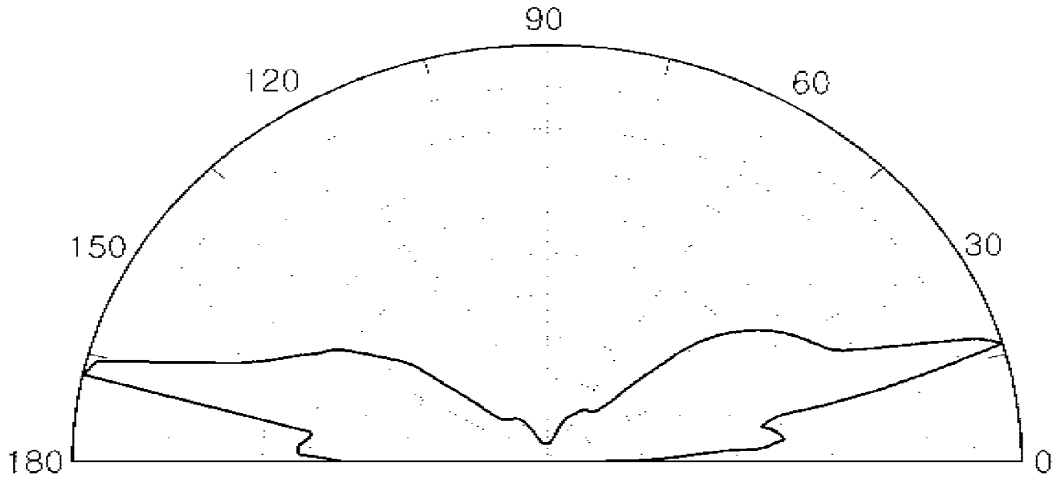

[Fig. 10]

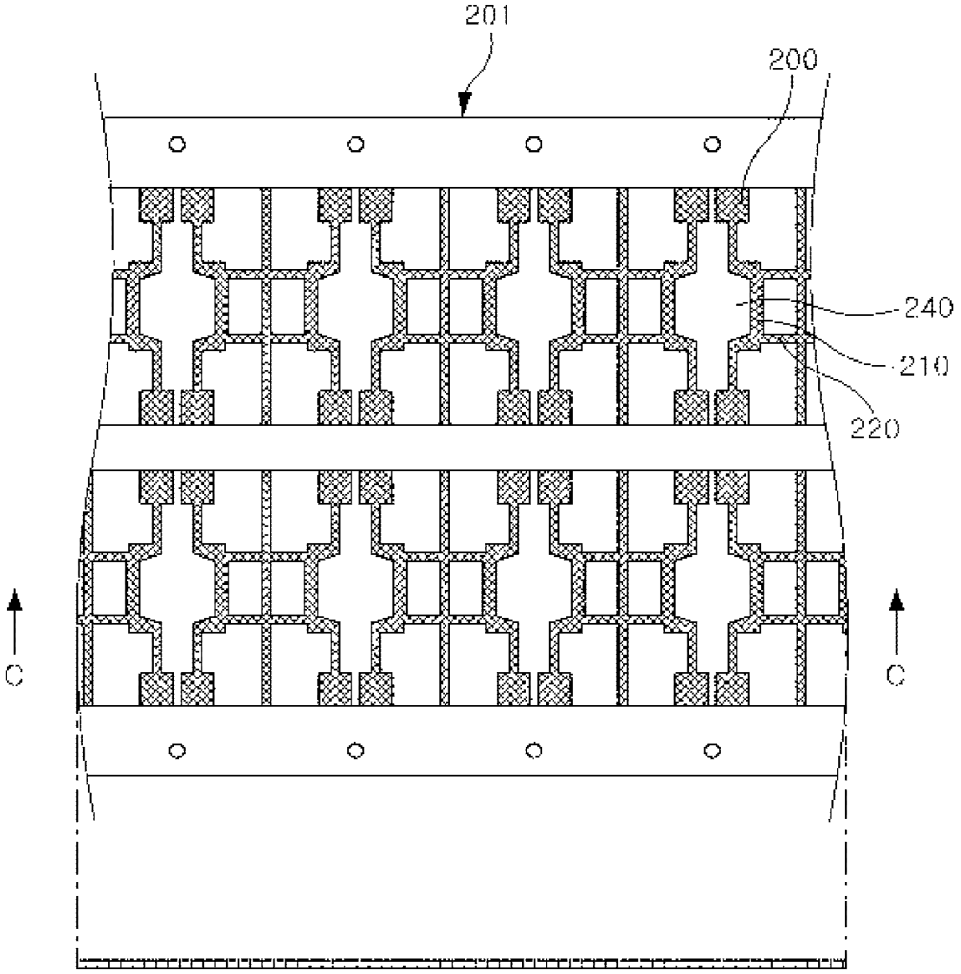

[Fig. 11]

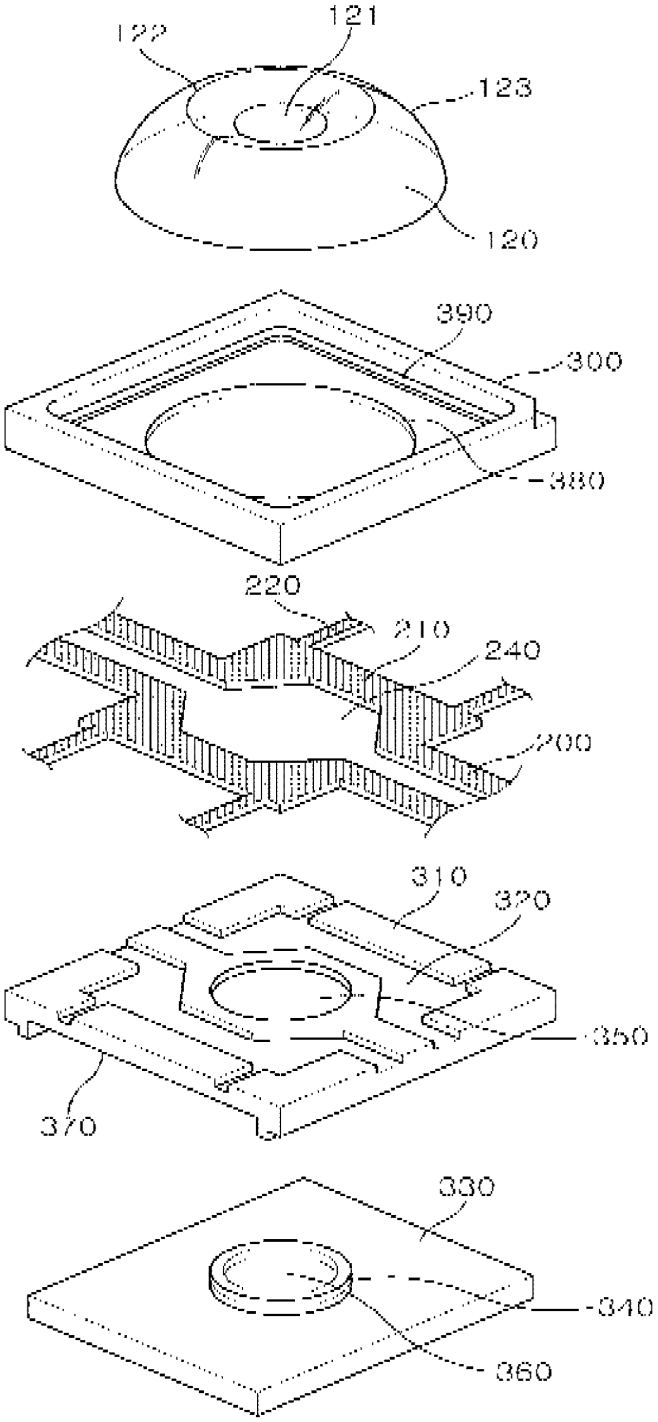
122
121
123
120
390
300
380
220
210
240
200
310
320
350
370
330
340
360

[Fig. 12]

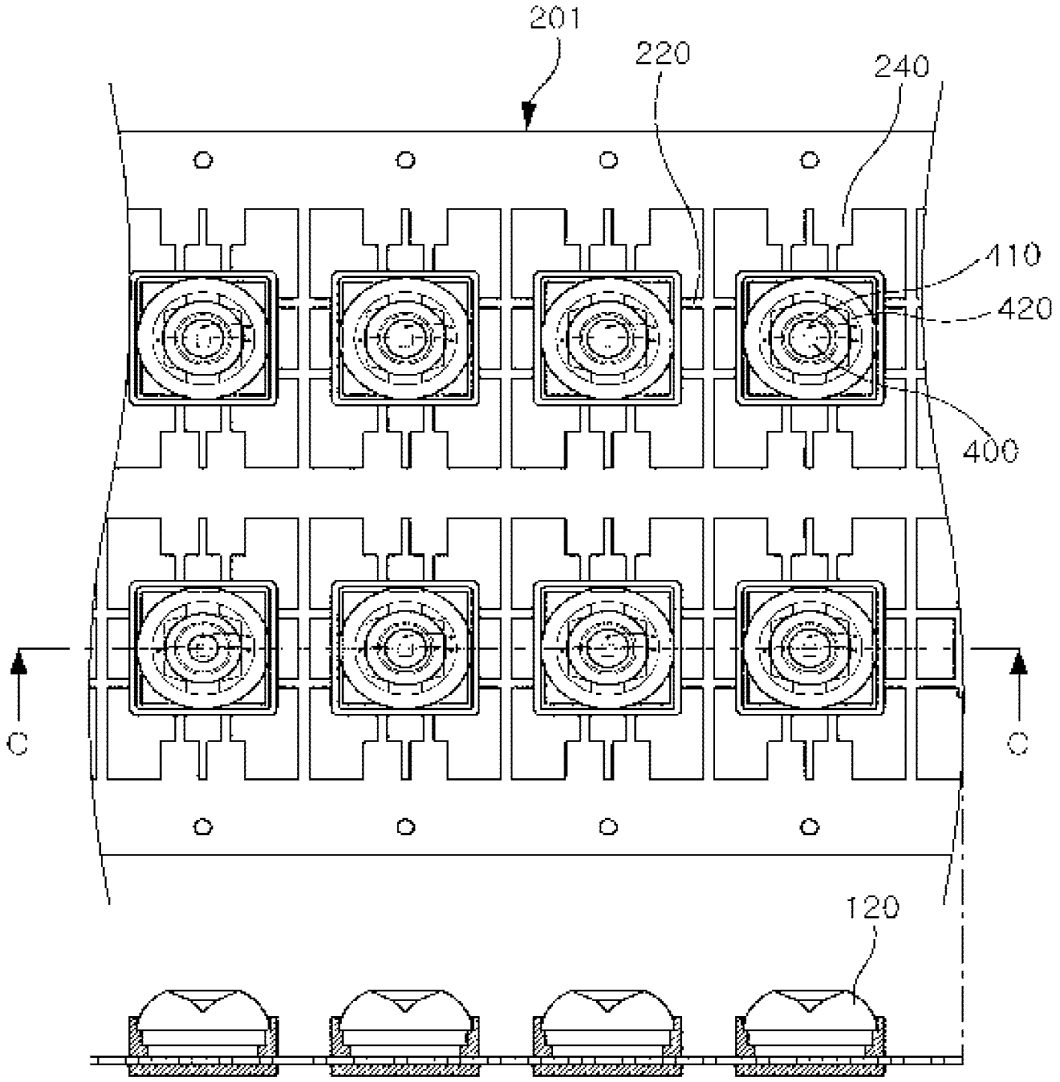

[Fig. 13]

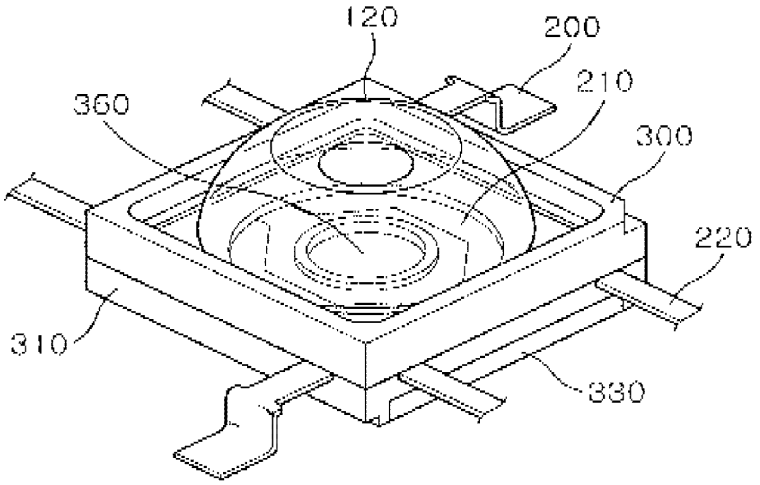

(a)

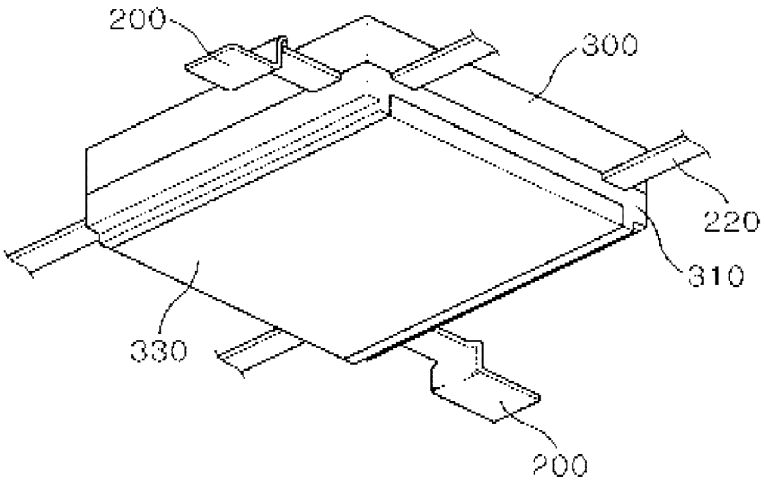

(b)

[Fig. 14]

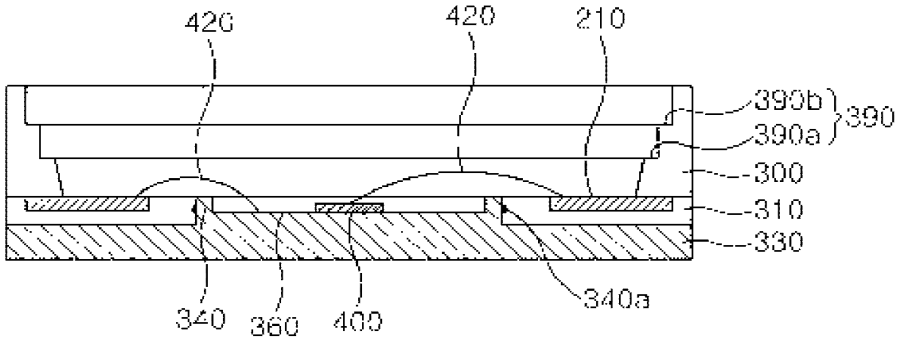
420
420
210
390b
390a
390
300
310
330
340
360
400
340a

(a)

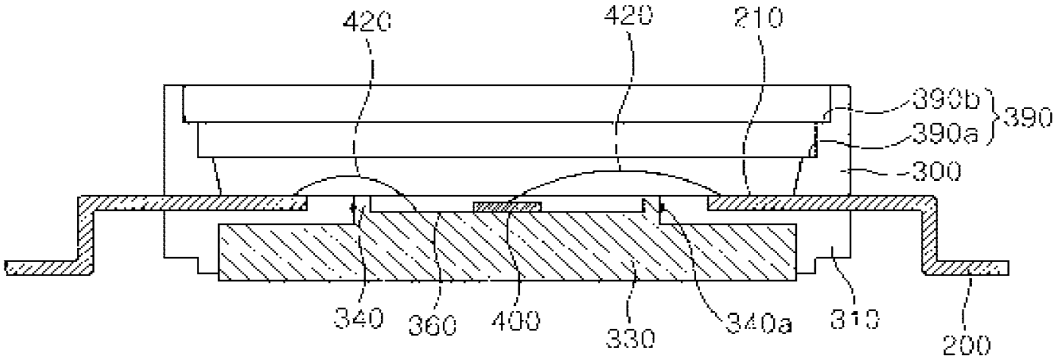
420
420
210
390b
390a
390
300
340
360
400
330
340a
310
200

(b)

[Fig. 15]

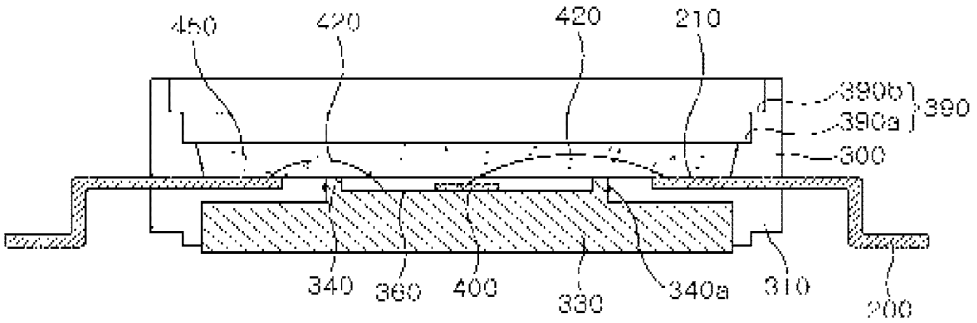
450
420
420
210
390b
390a
390
300
340
360
400
330
340a
310
200

(a)

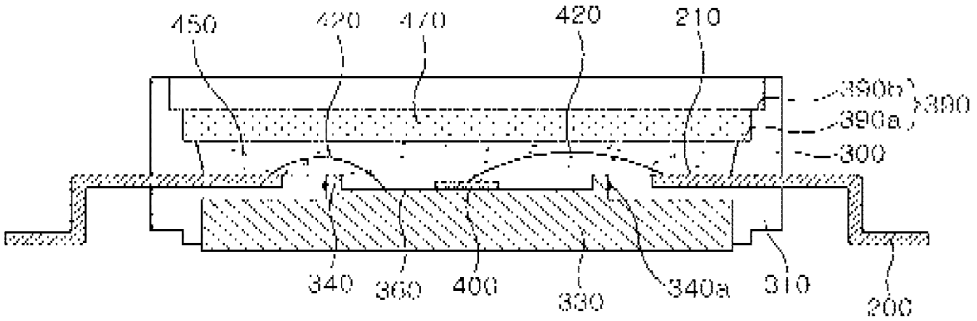
450
420
470
420
210
390b
390a
390
300
340
360
400
330
340a
310
200

(b)

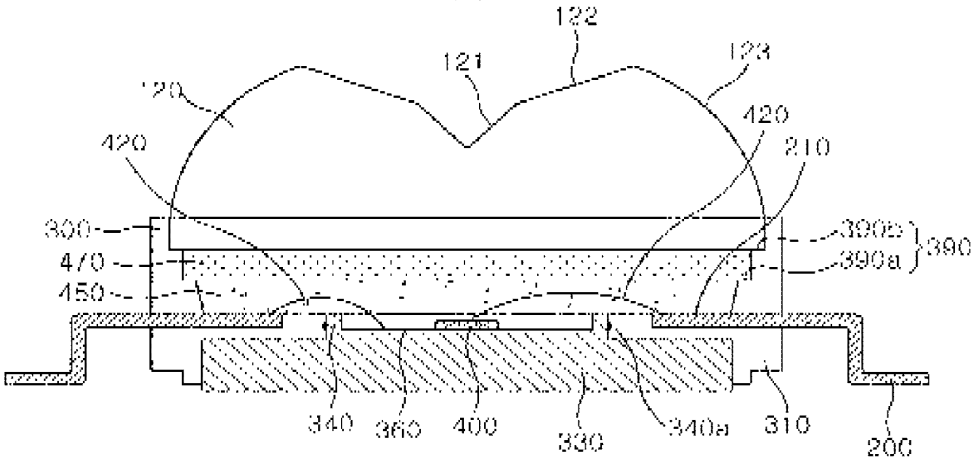
122
121
123
120
420
420
210
300
470
450
390b
390a
390
340
360
400
330
340a
310
200

(c)

[Fig. 16]

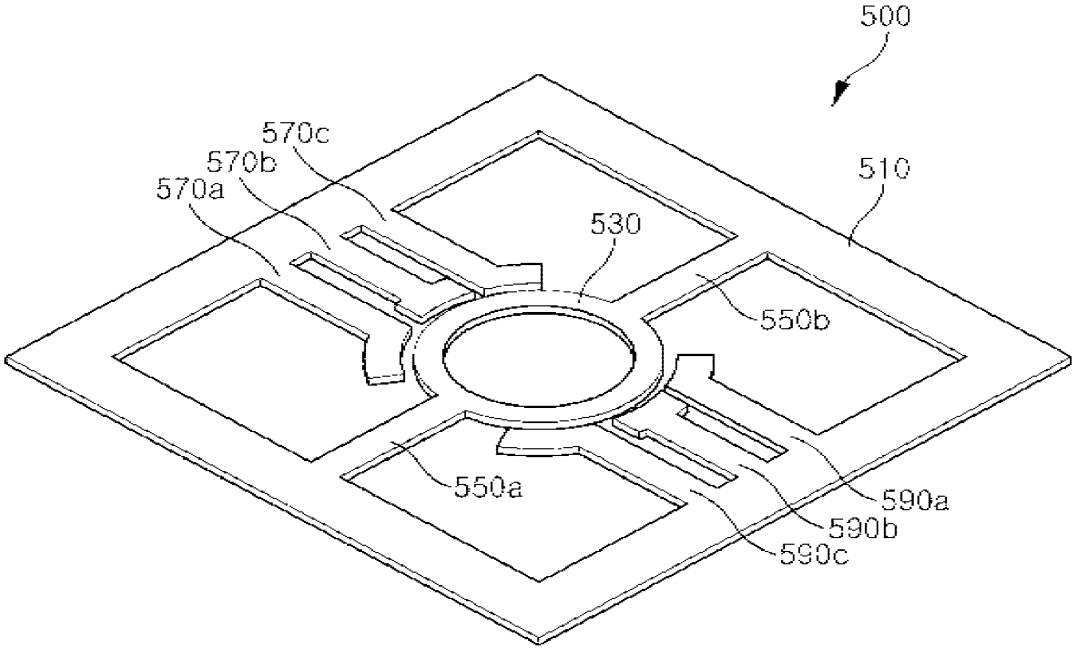

[Fig. 17]

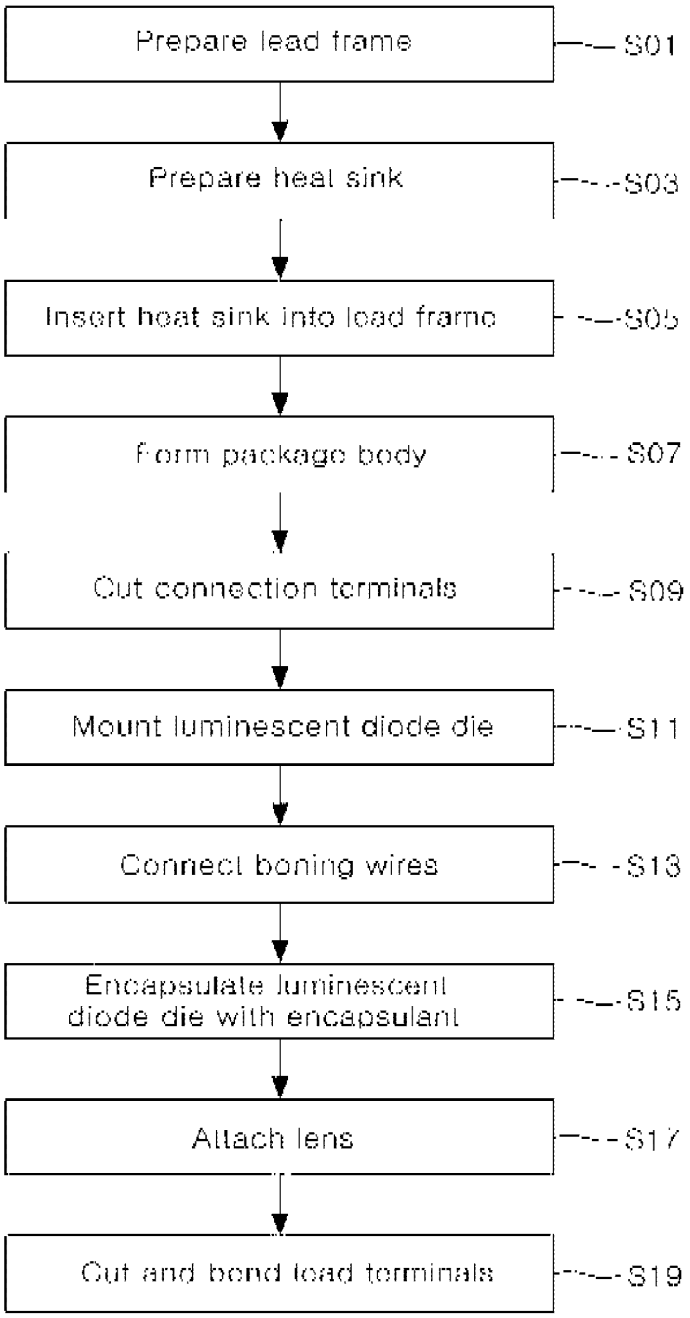
Prepare lead frame
S01
Prepare heat sink
S03
Insert heat sink into lead frame
S05
Form package body
S07
Cut connection terminals
S09
Mount luminescent diode die
S11
Connect boning wires
S13
Encapsulate luminescent diode die with encapsulant
S15
Attach lens
S17
Cut and bend lead terminals
S19

[Fig. 18]

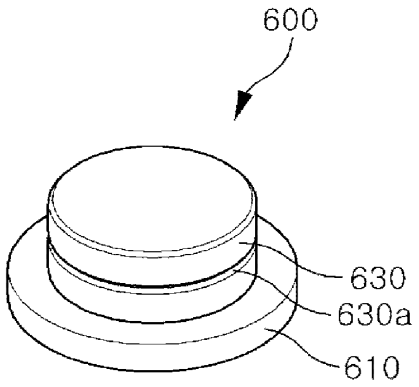
600
630
630a
610

[Fig. 19]

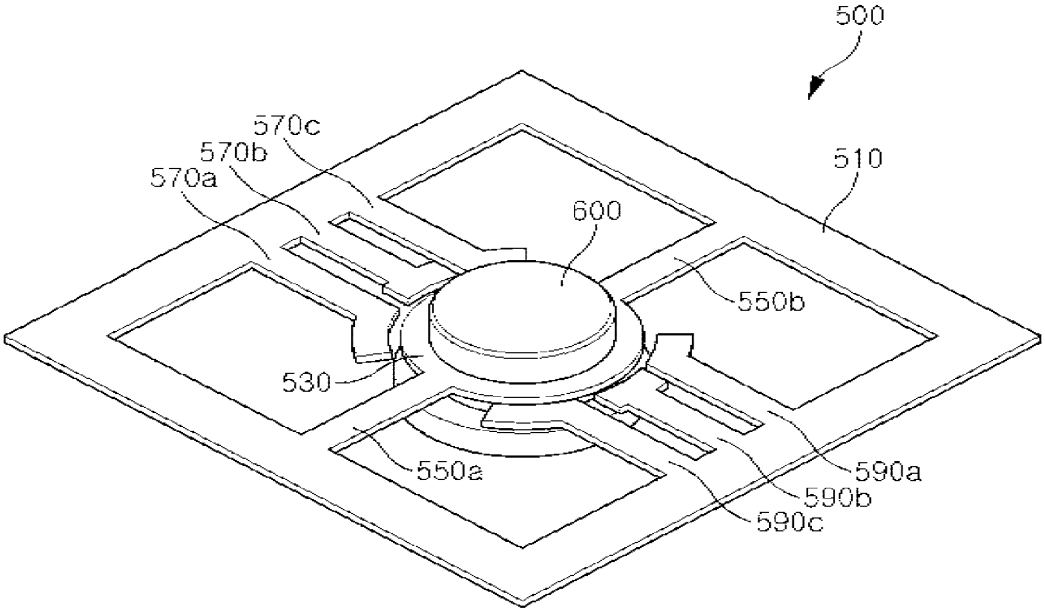
500
570c
570b
570a
510
600
550b
530
550a
590a
590b
590c

[Fig. 20]

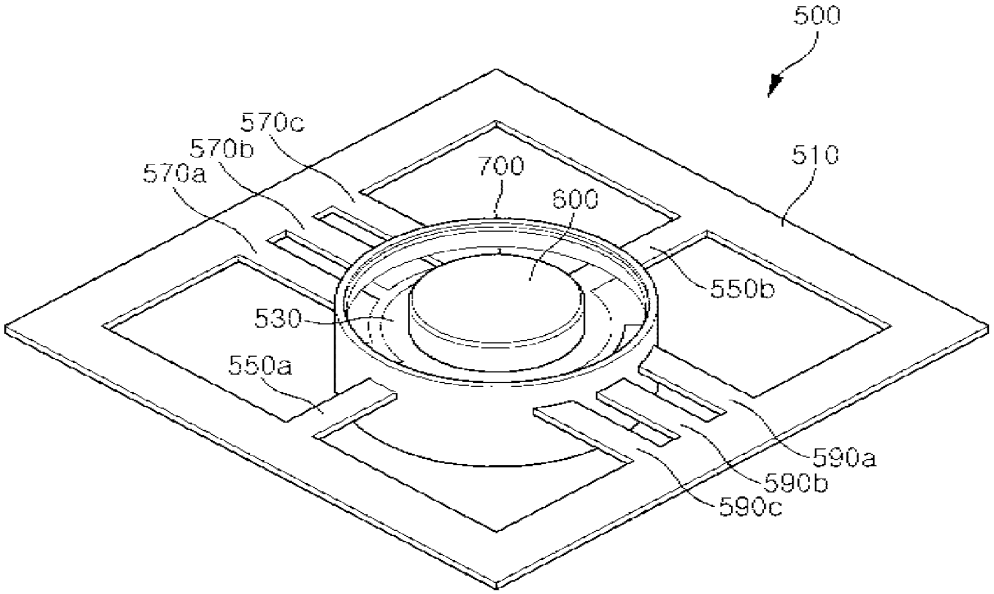
500
510
570c
570b
570a
700
600
550b
530
550a
590a
590b
590c

[Fig. 21]

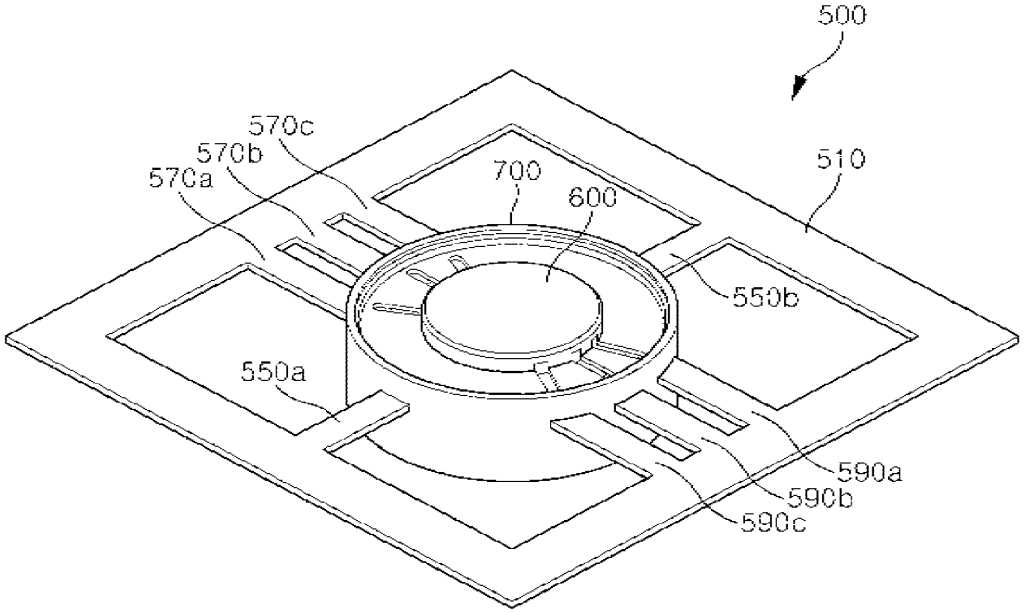
500
510
570c
570b
570a
700
600
550b
550a
590a
590b
590c

[Fig. 22]

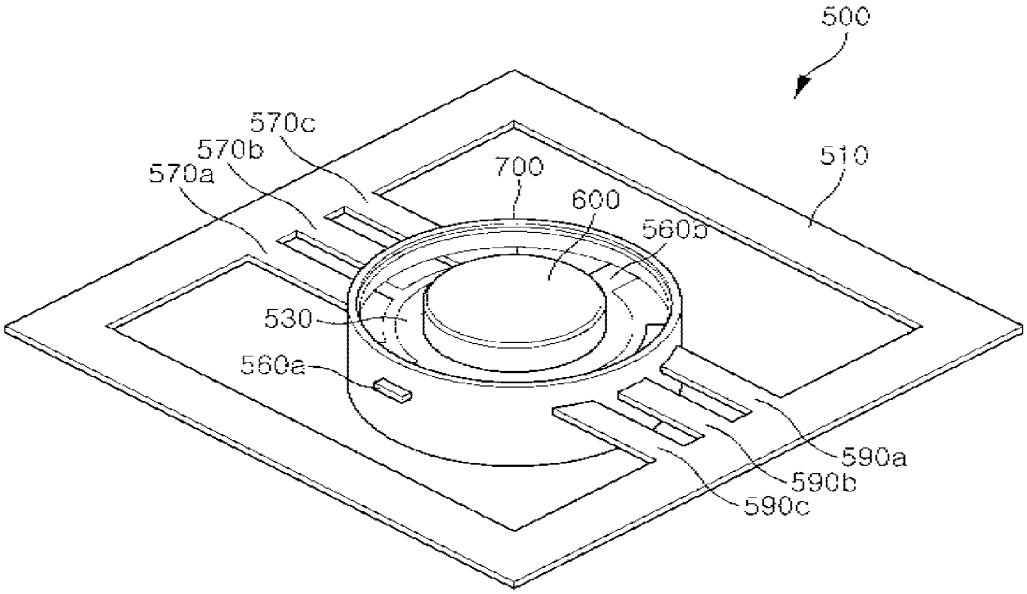
500
570c
570b
570a
700
600
560b
510
530
560a
590a
590b
590c

[Fig. 23]

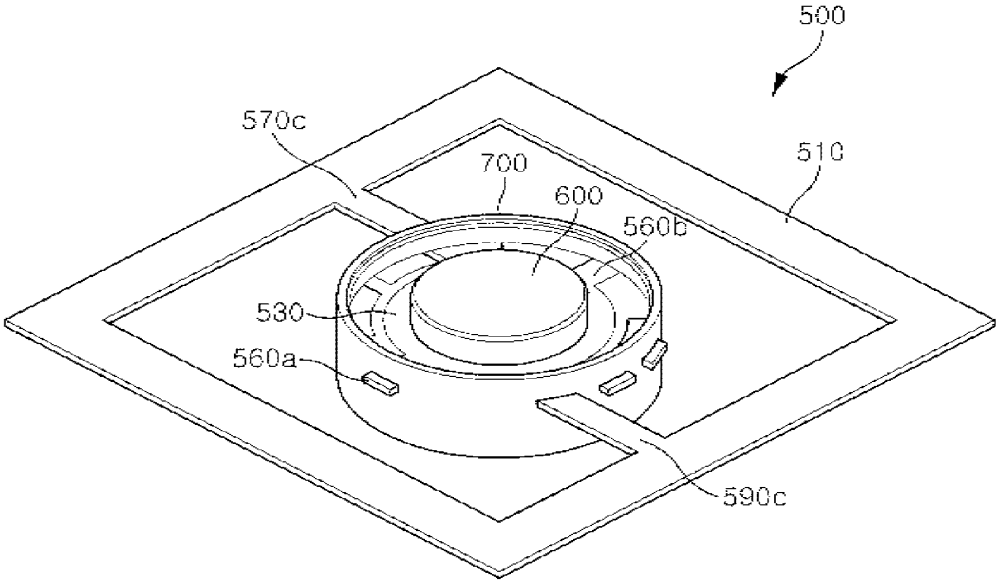
500
570c
700
600
560b
510
530
560a
590c

[Fig. 24]

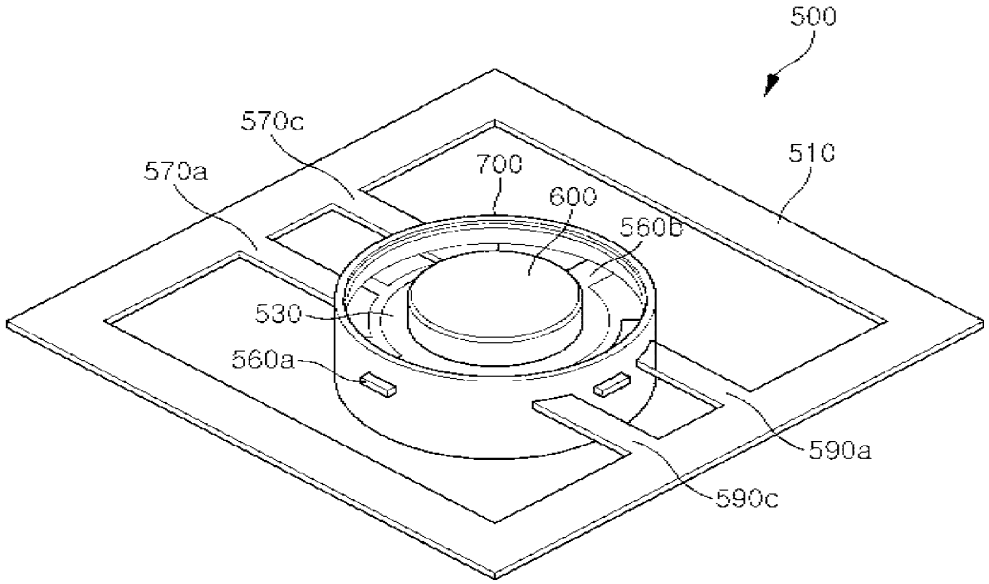
500
570c
570a
700
600
560b
510
530
560a
590a
590c

[Fig. 25]

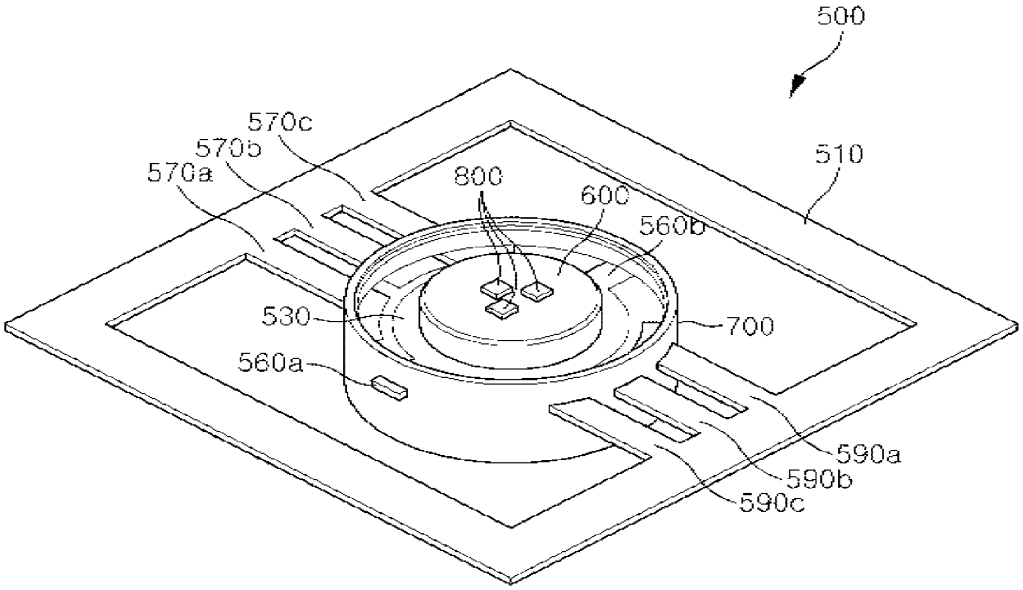
500
570c
570b
570a
800
600
560b
510
530
700
560a
590a
590b
590c

[Fig. 26]

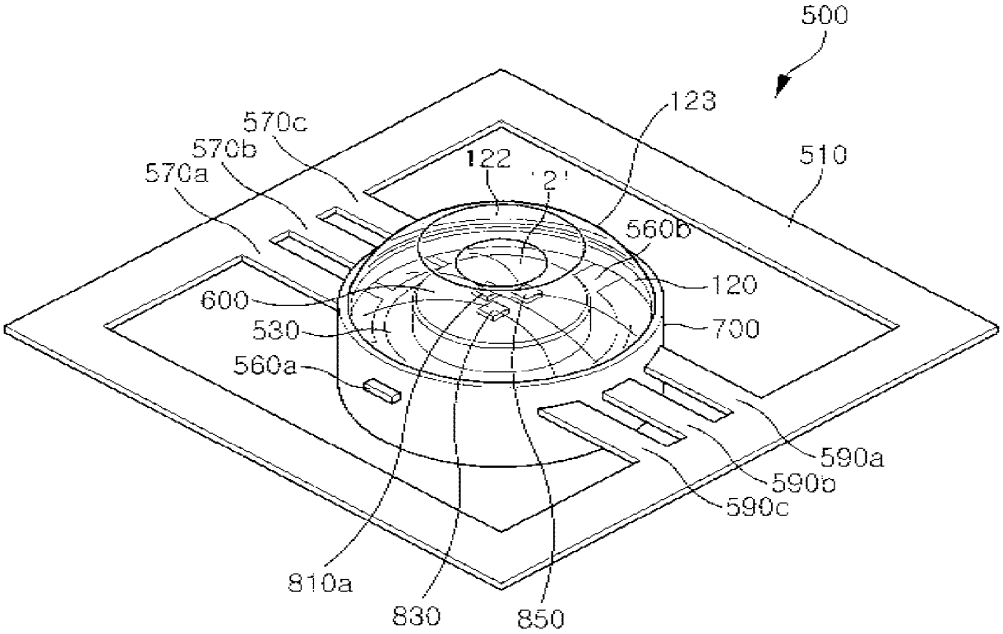
500
123
510
570c
570b
570a
122
21
560b
120
600
530
700
560a
590a
590b
590c
810a
830
850

[Fig. 27]

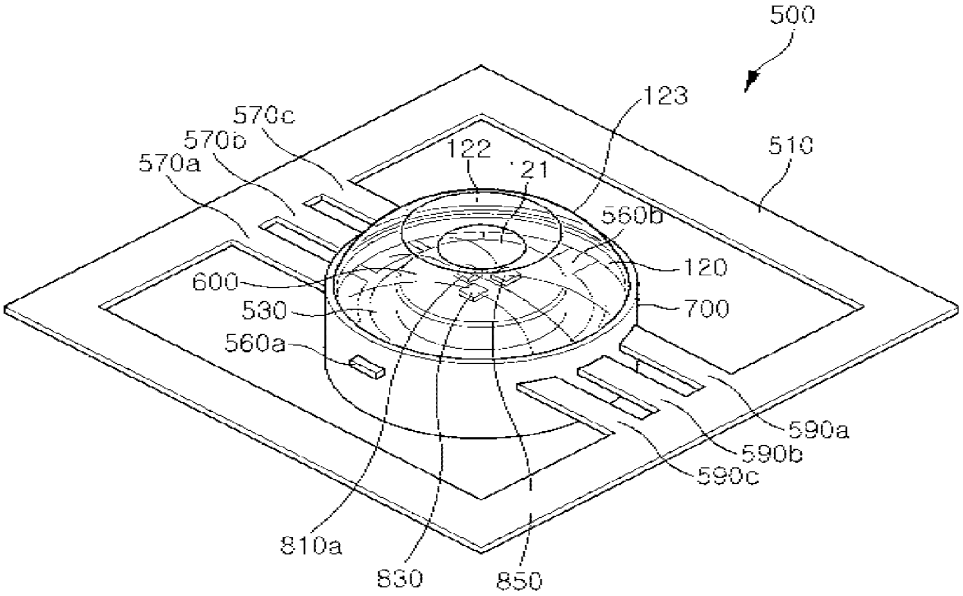
500
123
510
570c
570b
570a
122
21
560b
120
600
530
700
560a
590a
590b
590c
810a
830
850

[Fig. 28]

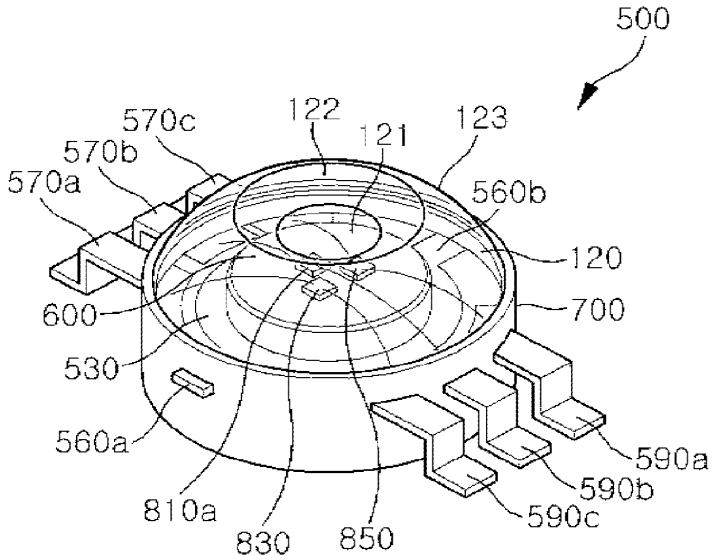

[Fig. 29]

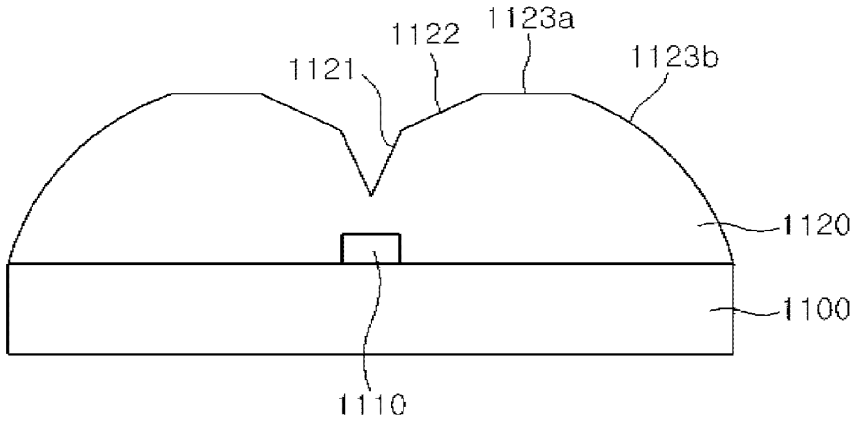

[Fig. 30]

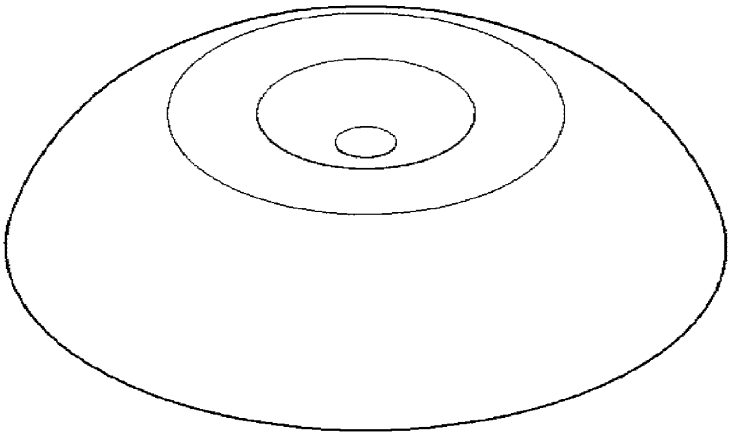

[Fig. 31]

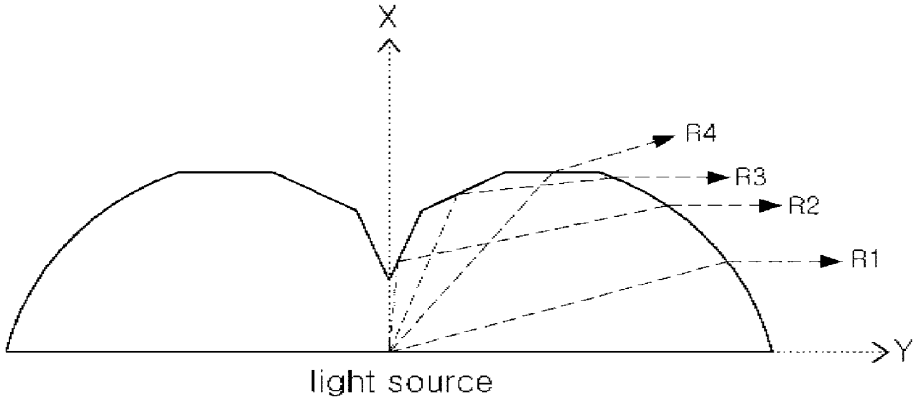
X
R4
R3
R2
R1
Y
light source

[Fig. 32]

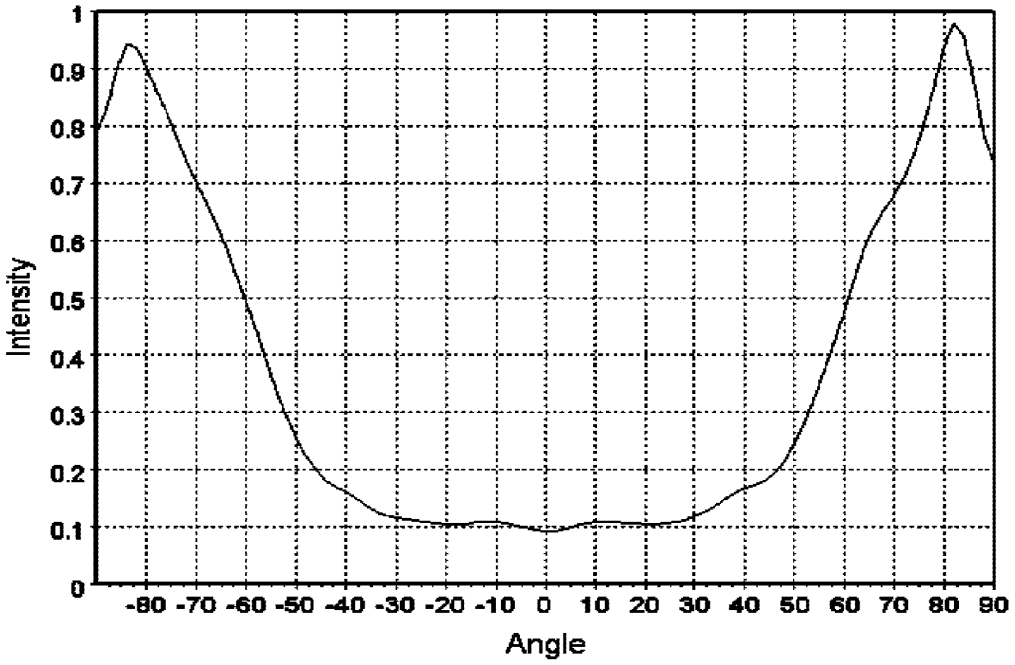
Intensity
1
0.9
0.8
0.7
0.6
0.5
0.4
0.3
0.2
0.1
0
-80 -70 -60 -50 -40 -30 -20 -10 0 10 20 30 40 50 60 70 80 90
Angle

[Fig. 33]

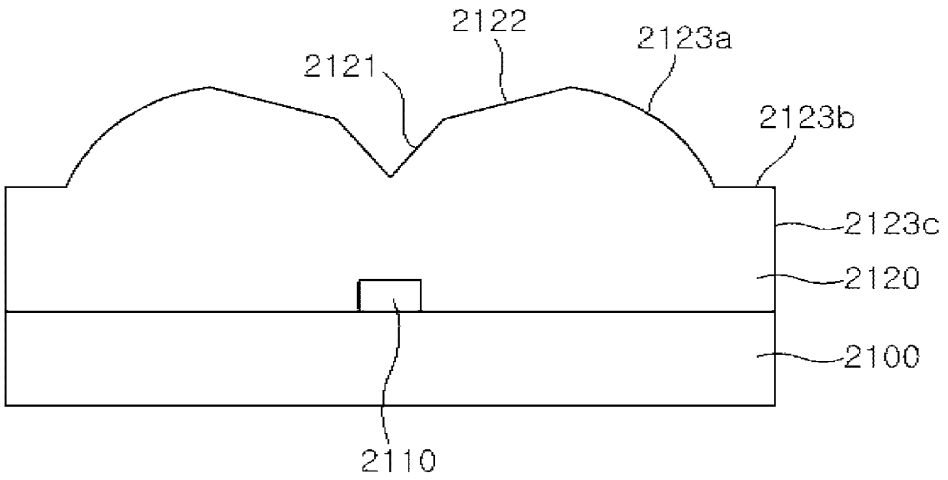

[Fig. 34]

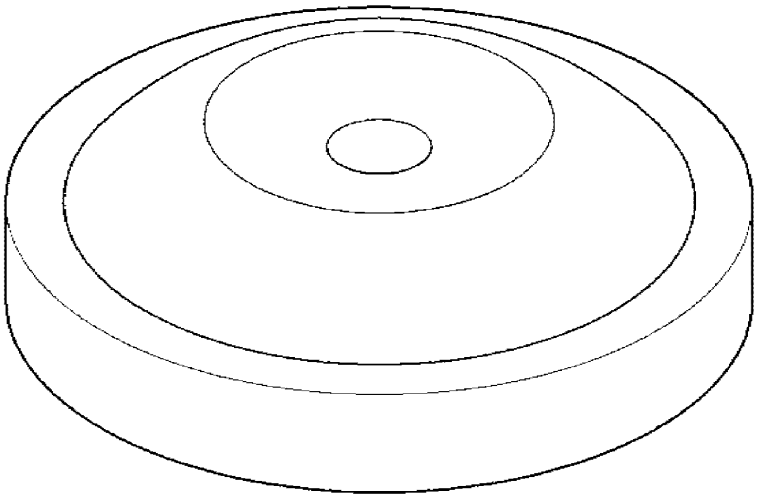

[Fig. 35]

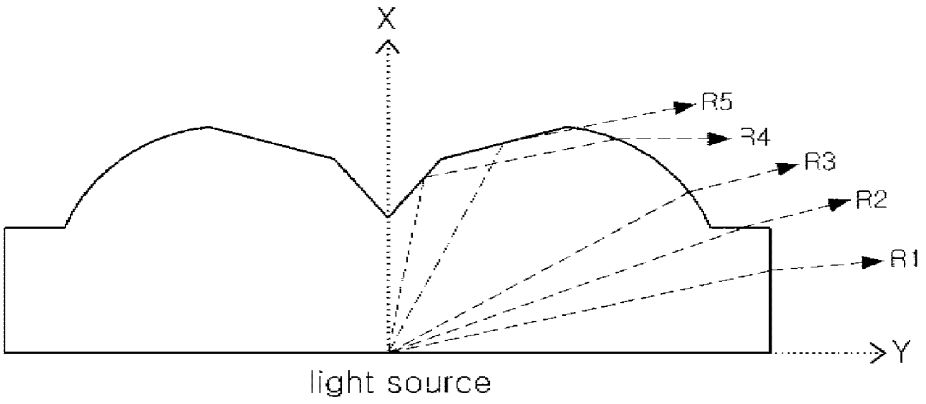

[Fig. 36]

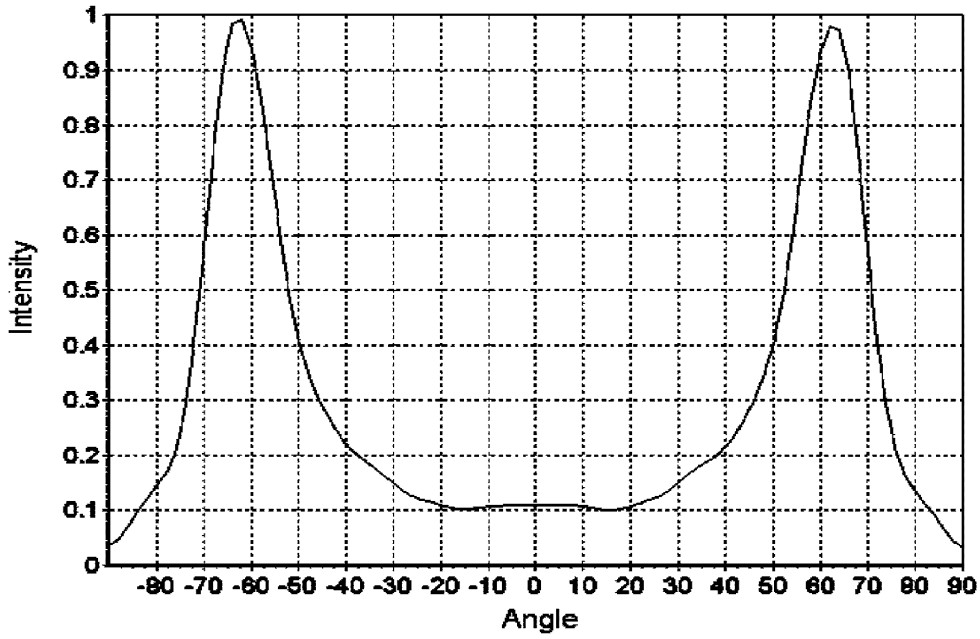
Intensity
1
0.9
0.8
0.7
0.6
0.5
0.4
0.3
0.2
0.1
0
-90 -70 -60 -50 -40 -30 -20 -10 0 10 20 30 40 50 60 70 80 90
Angle

[Fig. 37]

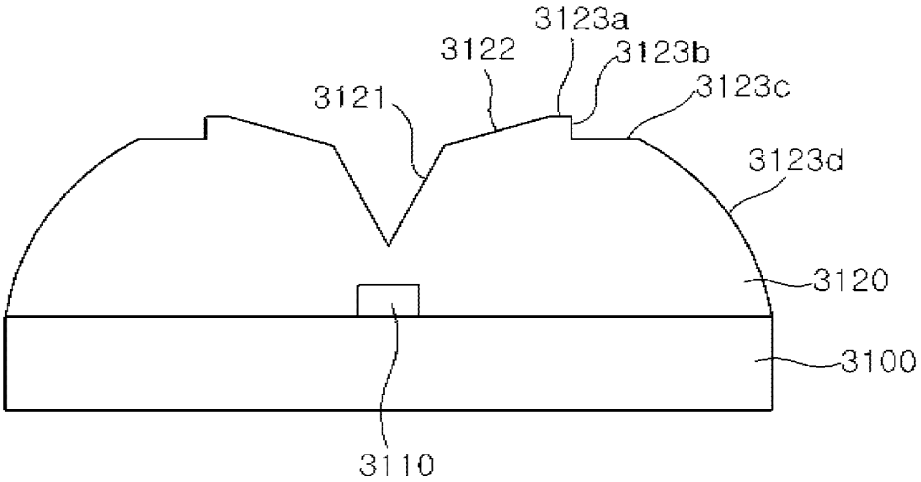
3123a
3122
3123b
3123c
3121
3123d
3120
3100
3110

[Fig. 38]

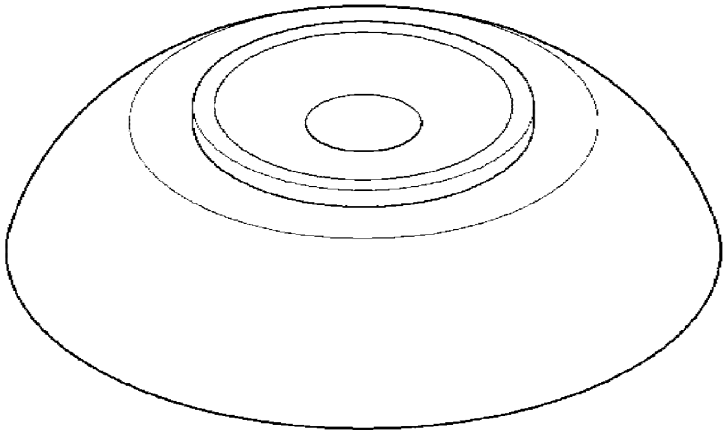

[Fig. 39]

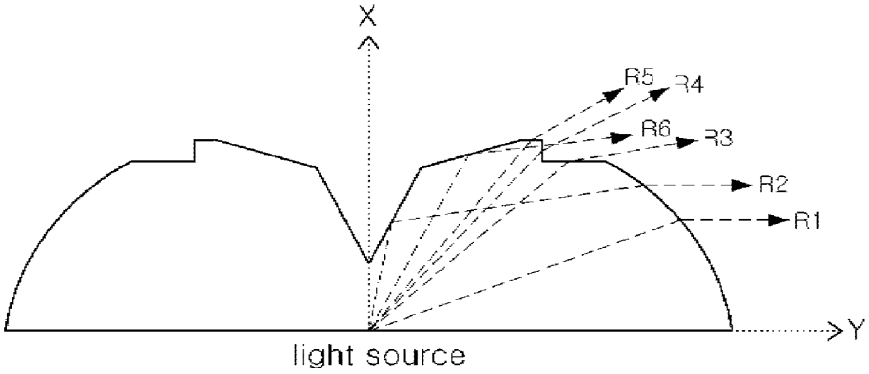

[Fig. 40]

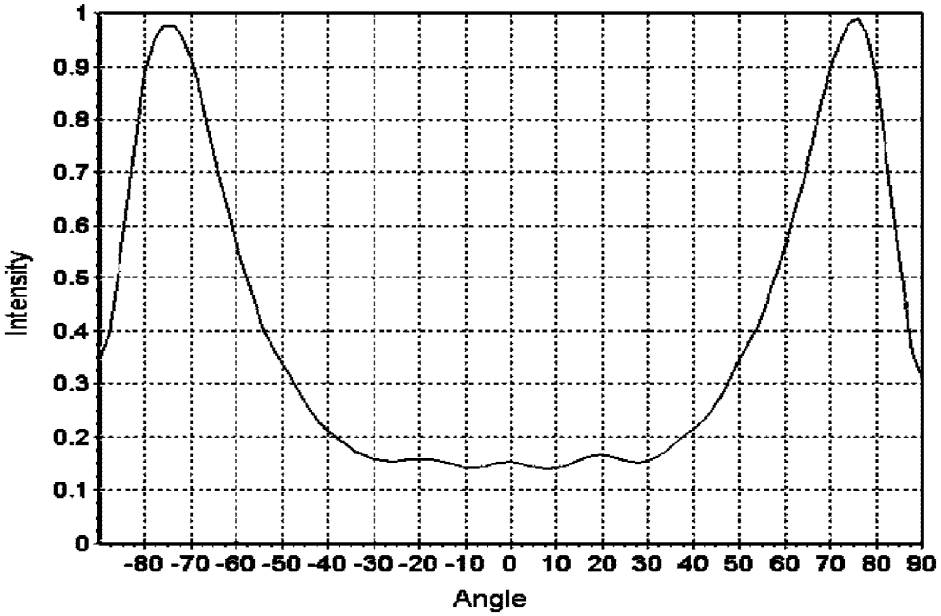

[Fig. 41]

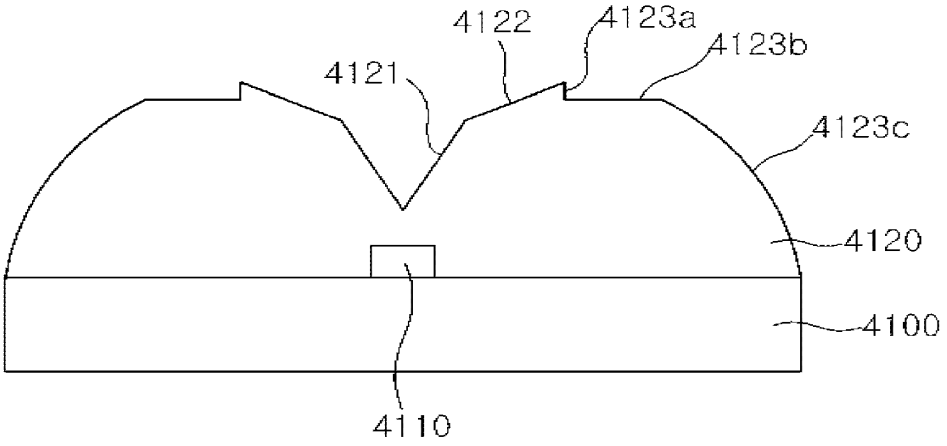

[Fig. 42]

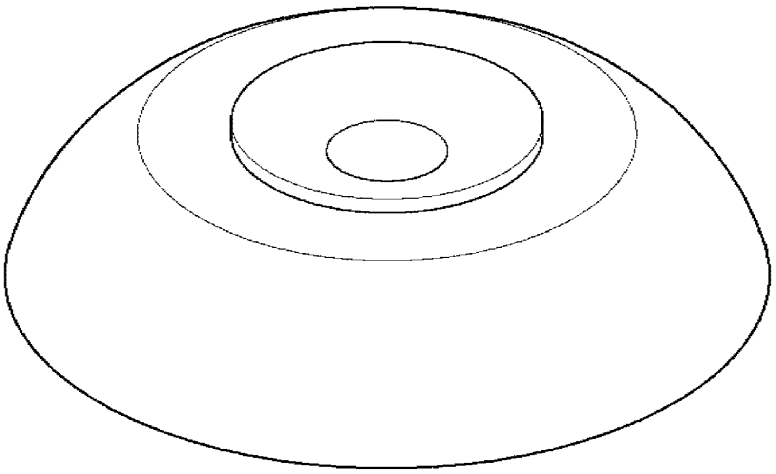

[Fig. 43]

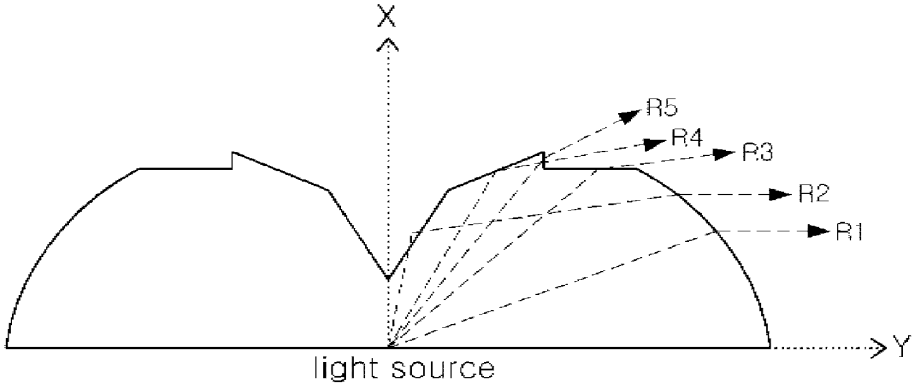

[Fig. 44]

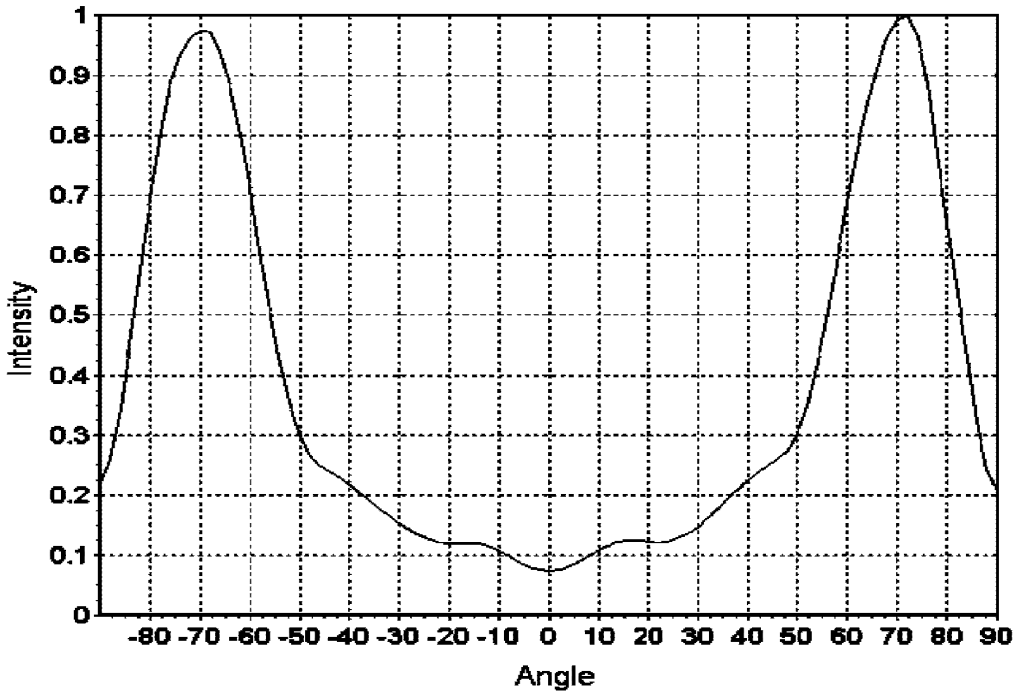
Intensity
1
0.9
0.8
0.7
0.6
0.5
0.4
0.3
0.2
0.1
0
-80 -70 -60 -50 -40 -30 -20 -10 0 10 20 30 40 50 60 70 80 90
Angle

Document made available under the Patent Cooperation Treaty (PCT)

International application number: PCT/KR2005/003346

International filing date: 07 October 2005 (07.10.2005)

Document type: Certified copy of priority document

Document details: Country/Office: KR
Number: 10-2004-0079909
Filing date: 07 October 2004 (07.10.2004)

Date of receipt at the International Bureau: 08 December 2005 (08.12.2005)

Remark: Priority document submitted or transmitted to the International Bureau in compliance with Rule 17.1(a) or (b)

World Intellectual Property Organization (WIPO) - Geneva, Switzerland
Organisation Mondiale de la Propriété Intellectuelle (OMPI) - Genève, Suisse

대 한 민 국 특 허 청
KOREAN INTELLECTUAL PROPERTY OFFICE

별첨 사본은 아래 출원의 원본과 동일함을 증명함.

This is to certify that the following application annexed hereto is a true copy from the records of the Korean Intellectual Property Office

출 원 번 호 : Application Number	특허출원 2004년 제 0079909 호 10-2004-0079909
출 원 일 자 : Date of Application	2004년 10월 07일 OCT 07, 2004
출 원 인 : Applicant(s)	서울반도체 주식회사 SEOUL SEMICONDUCTOR CO.,LTD

2005 년 11 월 17 일

특 허 청 장
COMMISSIONER

【서지사항】

【서류명】	특허출원서
【권리구분】	특허
【수신처】	특허청장
【참조번호】	0123
【제출일자】	2004.10.07
【발명의 국문명칭】	힛트 싱크를 갖는 발광다이오드 패키지 및 그 제조방법
【발명의 영문명칭】	LIGHT-EMITTING DIODE PACKAGE WITH A HEAT SINK AND METHOD OF MANUFACTURING THE SAME
【출원인】	
【명칭】	서울반도체 주식회사
【출원인코드】	1-1998-099837-1
【대리인】	
【성명】	이수완
【대리인코드】	9-1998-000352-8
【포괄위임등록번호】	2003-055257-1
【대리인】	
【성명】	조진태
【대리인코드】	9-2003-000088-1
【포괄위임등록번호】	2003-055260-8
【대리인】	
【성명】	윤종섭
【대리인코드】	9-2003-000089-8
【포괄위임등록번호】	2003-055261-5
【대리인】	
【성명】	이성규
【대리인코드】	9-2003-000083-0
【포괄위임등록번호】	2003-055259-5

【발명자】

【성명의 국문표기】 김도형

【성명의 영문표기】 KIM,Do Hyung

【주민등록번호】 731010-1231147

【우편번호】 440-841

【주소】 경기도 수원시 장안구 정자1동 873-3 연꽃마을 벽산아파트 425동 160 4호

【국적】 KR

【발명자】

【성명】 이정훈

【출원인코드】 4-2000-019288-2

【심사청구】 청구

【취지】 특허법 제42조의 규정에 의한 출원, 특허법 제60조의 규정에 의한 출원심사 를 청구합니다. 대리인

이수완 (인) 대리인

조진태 (인) 대리인

윤종섭 (인) 대리인

이성규 (인)

【수수료】

【기본출원료】	0	면	38,000	원
【가산출원료】	27	면	0	원
【우선권주장료】	0	건	0	원
【심사청구료】	7	항	333,000	원
【합계】	371,000 원			
【감면사유】	중소기업			
【감면후 수수료】	185,500 원			

【첨부서류】 1.중소기업기본법시행령 제2조에의한 중소기업에 해당함을 증명하는 서류[사업자등록증 1통, 중소기업기준검토표 1통, 반기대차대조표 1 통]_3통

【요약서】

【요약】

힛트 싱크를 갖는 발광다이오드 패키지 및 그 제조방법이 개시된다. 이 발광다이오드 패키지는 개구부 및 상기 개구부에 의해 노출된 관통홀을 갖는 패키지하우징을 포함한다. 한편, 리드프레임이 상기 패키지 하우징의 개구부 내에 그 내측부가 노출되고, 내측부에서 연장되어 상기 패키지하우징의 외부로 그 외측부가 돌출되어 위치한다. 또한, 힛트 싱크가 상기 패키지하우징의 하부에 결합되어 위치한다. 이 힛트 싱크의 일부는 패키지하우징의 개구부에 의해 노출된다. 따라서, 힛트 싱크 상에 발광다이오드 칩을 탑재하여, 발광다이오드 칩에서 생성되는 열의 방열 효율을 향상시킬 수있다.

【대표도】

도 4

【색인어】

패키지하우징, 리드프레임, 힛트 싱크, 걸림턱

【명세서】

【발명의 명칭】

힛트 싱크를 갖는 발광다이오드 패키지 및 그 제조방법{LIGHT-EMITTING DIODE PACKAGE WITH A HEAT SINK AND METHOD OF MANUFACTURING THE SAME}

【도면의 간단한 설명】

<1> 도 1a는 발광다이오드 패키지를 대량 생산하기 위한 종래의 LED 리드패널을 도시한 평면도 및 단면도;

<2> 도 1b는 발광다이오드 패키지를 대량 생산하기 위한 종래의 LED 리드패널에 몰딩재가 몰딩된 상태를 도시한 평면도 및 단면도;

<3> 도 2는 종래의 발광다이오드 패키지를 도시한 사시도 및 단면도;

<4> 도 3은 본 발명에 따른 발광다이오드 패키지를 양산하기 위한 LED 리드패널을 도시한 평면도 및 단면도;

<5> 도 4는 본 발명에 따른 힛트 싱크를 갖는 발광다이오드 패키지를 도시한 분리사시도;

<6> 도 5는 본 발명에 따른 힛트 싱크를 갖는 발광다이오드 패키지가 LED 리드패널에 형성된 상태를 도시한 확대 도시한 평면도 및 측면도;

<7> 도 6은 본 발명에 따른 힛트 싱크를 갖는 발광다이오드 패키지를 도시한 상부 사시도 및 하부 사시도;

<8> 도 7은 본 발명에 따른 힛트 싱크를 갖는 발광다이오드 패키지를 도시한 단

면도;

<9> 도 8은 본 발명에 따른 힛트 싱크를 갖는 발광다이오드 패키지에 몰딩되는 몰딩재 및 발광렌즈를 도시한 단면도이다.

<10> ♣도면의 주요부분에 대한 부호의 설명♣

<11> 40: 리드프레임, 41: 연결프레임,

<12> 42: 패널지지대, 44: 중공부,

<13> 50: 제1 패키지하우징, 51: 제2 패키지하우징,

<14> 52: 리드프레임 수용홈, 53: 힛트 싱크,

<15> 54: 삽입돌출부, 55: 제2 패키지하우징의 관통홀,

<16> 56: LED 안착부, 57: 힛트 싱크 안착홈,

<17> 58: 제1 패키지하우징의 관통홀, 59: 단턱부

【발명의 상세한 설명】

【발명의 목적】

【발명이 속하는 기술분야 및 그 분야의 종래기술】

<18> 본 발명은 힛트 싱크를 갖는 발광다이오드 패키지 및 그 제조방법에 관한 것으로서, 보다 상세하게는 LED 리드패널로부터 조립 완성되는 발광다이오드 패키지에 LED칩을 실장하면서, LED칩으로부터 발생되는 열을 외부로 방출할 수 있는 힛트 싱크를 구비하여 방열효율을 향상시킬 수 있는 발광다이오드 패키지 및 그 제조방법에 관한 것이다.

<19> 일반적으로 LED칩은 전기 에너지를 광반사(Optical Radiation)로 변환하는 반도체 소자로서, 사용목적 또는 형태에 따라 LED칩을 선택적으로 박막패턴이 형성된 인쇄회로기판(PCB) 또는 리드 단자의 상부면에 실장한 후, 상기 LED칩과 기판 또는 리드 단자를 전기적으로 연결하고, 그 상부에 에폭시 등을 사용하여 몰드 성형부를 형성하거나, 미리 플라스틱이나 유리로 렌즈를 만들어 조립형으로 발광다이오드 패키지를 제조할 수 있다.

<20> 상기한 발광다이오드 패키지에서 발광되는 색에 따라 칩의 구조, 성장 방법 및 재료가 달라진다는 것은 잘 알려져 있다. 또한 발광다이오드 패키지(Light Emitting Diode Package)는 일반적으로, 표시소자 및 백라이트(Back Light)로 이용되며, 최근에는 핸드폰이나 휴대용 개인정보단말기(Personal Digital Assistants; PDA) 등에 그 적용이 증대되고 있는 추세이다.

<21> 다시 말해서, 발광다이오드 패키지는 전원을 공급받으면 발광할 수 있는 LED칩을 먼지, 습기, 전기적, 기계적 부하 등의 각종 외부 환경으로부터 보호하고, 상기 LED칩의 전기적 성능을 최적화, 극대화시키기 위해 리드프레임(Lead Frame)이나 인쇄회로기판(PCB) 등을 이용해 메인보드(Main Board)로의 신호 입/출력 단자를 형성하고 봉지재를 이용하여 몰딩(Molding)한 것을 말한다.

<22> 이런한 발광다이오드 패키지는 그 메인보드에 실장하는 방법에 따라 삽입형과 표면실장형으로 분류할 수 있으며, 삽입형으로서는 SIP(Single In-Line Package) DIP(Dual In-line Package), PGA(Pin Grid Array) 등이 있고, 표면 실장형으로서는 QFP(Quad Flat Package), BGA(Ball Grid Array) 패키지, BLP(Bottom

Leaded Package) 등이 있다. 최근에는 전자 제품의 소형화에 따라 LED칩 및 발광다이오드 패키지의 크기도 소형화 추세에 있으며, 또한 메인보드의 실장밀도를 높이기 위해 삽입형 패키지보다는 표면실장형 패키지가 널리 이용되고 있는 실정이다.

<23> 상기한 표면 실장형의 발광다이오드 패키지를 양산 제조하기 위한 방법으로는, 도 1a에 도시된 LED 리드패널을 이용하는 조립방식이 적용된다. 즉, 전기 전도성 및 열전도성이 좋은 구리합금 재질의 LED 리드패널(1)은 일정 수준이상의 강도를 가지는 얇은 박판형태로 제조되며, 이렇게 제조된 LED 리드패널(1)에는 LED칩이 실장되는 칩단자(2)와, 이와 일체형으로 리드프레임(3)이 일련의 반복적인 단위체 형태로 형성되어 있다.

<24> 상기 리드프레임(3)은 그 각각이 전기적으로 단절되도록 상기 LED 리드패널(1)에 형성된 프레임 경계홀(4)에 의하여 구분되며, 일련의 반복적인 단위체의 칩단자(2) 및 리드프레임(3)은 단위 경계홀(5)에 의하여 구분되어진다. 또한, 상기 LED 리드패널(1)에는 후술하는 패키지 몰딩재의 몰딩을 위하여, 상기 리드프레임(3)이 형성되지 않은 칩단자(2)의 양측부에는 상기 패키지 몰딩재가 상하부에서 부착 고정될 때 상하부 패키지 몰딩재가 상호 접촉하여 부착될 수 있는 패키징 홀(6)이 천공되어 있다.

<25> 상기와 같은 형태의 LED 리드패널(1)을 이용하여 양산되는 발광다이오드 패키지의 제조공정을 설명하면 다음과 같다.

<26> 먼저, 도 1b에 도시된 바와 같이, LED 리드패널(1)에 형성된 리드프레임(3)과 일체형으로 형성되는 칩단자(2) 부분에 열전도성 플라스틱 재질의 패키지 몰딩

재(10)가 몰딩되어진다. 상기 몰딩재(10)는 상부(10a) 및 하부(10b)로 나뉘어져 LED 리드패널(1)의 상하부에서 고온고압에 의하여 압착되는 방식으로 몰딩되며, 상기 몰딩재(10)의 상부(10a)에는 LED칩의 반사판 역할을 하도록 경사면 형태의 반사면(11)이 형성되어 있다.

<27> 상기와 같이, LED 리드패널(1)의 칩단자(2) 부분에 몰딩재(10)가 몰딩된 다음에는 칩단자(2)에 LED칩(20)이 실장되고, 상기 LED칩(20)이 실장된 다음에는 공통단자(2a)에 전기적으로 와이어(30)로 극성 연결되는 것이다.

<28> 상기한 바와 같이, LED칩(20)이 칩단자(2)에 실장되고, 공통단자(2a)에 전기적으로 와이어(30)로 극성 연결된 다음에는 상기 몰딩재(10) 상부(10a)의 반사면(11)에 발광렌즈(미도시)를 고정하거나, 투명 에폭시 또는 실리콘과 같은 LED 몰딩재(미도시)로 몰딩하게 되는 것이다.

<29> 상기한 일련의 조립공정이 완료되어 다수의 발광다이오드 패키지 단위체가 완성되면, 도 2의 (a)에 도시된 바와 같이, 각각의 발광다이오드 패키지 단위체는 LED 리드패널(1)로부터 절단 취출되며, 취출된 다음에는 상기 리드프레임(3)이 메인보드(미도시)에 삽입 장착되도록 적당하게 절곡하게 되는 것이다.

<30> 그러나, 상기 설명한 종래의 제조기술로서 조립 제조되는 발광다이오드 패키지는, 도 2의 (b)에 도시된 바와 같이, LED 리드패널(1)로부터 제조되어 리드프레임(3)과 칩단자(2) 및 공통단자(2a)가 일체형으로 형성되고, 패키지 몰딩재(10)가 리드프레임(3)을 완전히 감싸도록 형성되기 때문에 LED칩(20)으로부터 발산되는 열이 충분히 방출되지 않는 문제점이 있다.

<31> 특히, 발열량이 상대적으로 많은 고휘도 파워 LED 패키지에는 LED칩(20)으로부터 발산되는 열을 방출하기 위한 열전달 슬러그(Slug) 또는 힛트 싱크(Heat Sink)가 필수적으로 구성되어야 하지만, 상기한 종래의 LED 리드패널(1)을 적용하여 고휘도 파워 LED 패키지를 조립 생산하는 공정은 리드프레임(3)이 하부 몰딩재(10b)에 의하여 하부가 완전하게 감싸는 형태로 구성되기 때문에 LED칩(20)으로부터의 열을 하부방향으로 발열시키지 못하며, 이러한 열을 하부방향으로 방출시키는 힛트 싱크를 별도로 설치하기에는 곤란하다는 문제점이 있다.

<32> 따라서, 종래의 LED 리드패널(1)을 이용하여 고휘도 파워 LED 패키지를 조립 제작하면 파워 LED칩으로부터 발산되는 열의 방출이 제대로 이루어지지 않아 LED칩(20)이 조기 열손되어 LED 패키지의 수명이 현저히 단축되는 문제점이 있는 것이다.

【발명이 이루고자 하는 기술적 과제】

<33> 상기한 종래기술의 문제점을 해결하기 위해서, 본 발명은 리드프레임이 형성된 LED 리드패널에 패키지 하우징을 형성시킨 다음, 하부에서 힛트 싱크를 삽입 고정하고, 이에 LED칩을 본딩시켜 발광다이오드 패키지를 조립 제작함으로써 LED칩으로부터 발산되는 열이 원활하게 하부로 방출되고, 이러한 방열효율이 향상됨으로써 고휘도 발광다이오드 패키지에도 적용할 수 있는 발광다이오드 패키지 및 그 제조방법을 제공하는데 그 목적이 있다.

【발명의 구성】

<34> 상기한 목적을 달성하기 위하여, 본 발명은 힛트 싱크를 갖는 발광다이오드 패키지 및 그 제조방법을 제공한다. 본 발명의 일 태양에 따른 발광다이오드 패키지는 개구부 및 상기 개구부에 의해 노출된 관통홀을 갖는 패키지하우징; 상기 패키지 하우징의 개구부 내에 노출된 내측부 및 상기 내측부에서 연장되어 상기 패키지하우징의 외부로 돌출된 외측부를 갖는 리드프레임; 및 상기 패키지하우징의 하부에 결합되어 상기 개구부에 의해 일부가 노출된 힛트 싱크를 포함한다. 상기 개구부에 의해 노출된 힛트 싱크 상에 발광다이오드 칩을 탑재함으로써, 상기 발광다이오드칩에서 생성된 열의 방열 효율이 향상된다.

<35> 또한, 상기 패키지 하우징은 상기 리드프레임을 사이에 두고 상호 결합된 제1 하우징부 및 제2 하우징부를 포함할 수 있다. 상기 개구부는 상기 제1 하우징부에 의해 형성될 수 있다.

<36> 상기 개구부의 내벽에는 단턱부가 형성될 수 있다. 이에 더하여, 상기 제2 하우징부는 그 상부에 상기 리드프레임을 수용하는 수용홈을 가질 수 있다.

<37> 한편, 상기 힛트 싱크는 상기 패키지하우징의 하부면에 대응하는 힛트 싱크 본체 및 상기 힛트 싱크 본체의 중앙부에서 상향 돌출되어 상기 패키지하우징의 관통홀에 삽입된 삽입돌출부를 포함할 수 있다. 상기 힛트 싱크 본체 및/또는 상기 삽입돌출부는 결합턱을 가질 수 있다. 상기 결합턱은 상기 힛트 싱크가 상기 패키지하우징에 결합된 후, 상기 패키지하우징으로부터 분리되는 것을 방지한다.

<38> 상기 패키지 하우징의 재질은 플라스틱 또는 세라믹스일 수 있다. 상기 세라

믹스는 알루미나(Al_2O_3), 탄화규소(SiC) 또는 질화알루미늄(AlN) 중에서 선택된 하나일 수 있다.

<39> 본 발명의 다른 태양에 따른 발광다이오드 패키지 제조방법은 각각 중앙에 중공부를 구비하는 LED 리드프레임들을 갖는 리드패널을 마련하는 것을 포함한다. 상기 LED 리드프레임들의 중공부들 주위에 패키지하우징들을 형성한다. 이때, 상기 각 패키지하우징은 상기 중공부 및 상기 LED 리드프레임의 일부를 노출시키는 개구부 및 상기 중공부 하부에 관통홀을 갖는다. 상기 패키지하우징의 하부에 힛트 싱크가 결합된다. 상기 힛트 싱크의 일부는 상기 개구부에 의해 노출된다. 상기 개구부에 의해 노출된 상기 힛트 싱크에 LED칩이 실장된다. 상기 LED칩과 상기 개구부에 노출된 LED 리드프레임의 일부가 전기적으로 연결된다. 그 후, 상기 리드패널에서 상기 LED 리드프레임들을 절단하여 개별 소자들로 분리한다.

<40> 한편, 상기 힛트 싱크는 상기 패키지하우징의 하부면보다 더 아래로 돌출되도록 결합될 수 있다.

<41> 이하, 첨부된 도면을 참조하여 본 발명의 바람직한 실시예들을 상세하게 설명한다.

<42> 도 3은 본 발명에 따른 발광다이오드 패키지를 양산하기 위한 LED 리드패널을 도시한 평면도 및 단면도이고, 도 4는 본 발명에 따른 힛트 싱크를 갖는 발광다이오드 패키지를 설명하기 위한 분리사시도이며, 도 5는 본 발명에 따른 힛트 싱크를 갖는 발광다이오드 패키지가 LED 리드패널에 형성된 상태를 확대 도시한 평면도 및 측면도이다.

<43> 도 3에 도시된 바와 같이, 본 발명에 따른 발광다이오드 패키지를 제조하기 위한 LED 리드패널(1a)에는 리드프레임(40) 및 연결프레임(41)으로 이루어지는 다수의 단위체가 일정 간격으로 형성되며, 상기 리드프레임(40)은 한 쌍으로 연결프레임(41)과 일체형으로 형성되어 있으며, 상기 연결프레임(41)은 좌우 대칭구조로 형성되어 중앙부에 소정형상의 중공부(44)를 형성하고 있다. 리드프레임(40)과 연결프레임(41)을 구분한 것은 리드프레임의 구조를 쉽게 설명하기 위한 것으로, "리드프레임"이 리드프레임(40)과 연결프레임(41)을 모두 포함하는 의미로 사용될 수 있다.

<44> 또한, 상기와 같이 중앙에 중공부(44)를 형성하는 연결프레임(41)은 LED 리드패널(1a)에 고정되도록 패널 지지대(42)에 의하여 지지되어 있으며, 이는 후술하는 제1 및 제2패키지 하우징(50, 51)이 고정될 때 상기 연결프레임(41)의 위치를 고정하는 역할을 하는 것이다.

<45> 한편, 본 발명의 실시예에서는 좌우 대칭구조를 이루는 연결프레임(41)의 중앙에 형성되는 공간부(44)의 형상을 육각형으로 하였으나, 이는 원형 또는 사각형 이상의 다각형도 적용될 수 있는 것이다.

<46> 상기한 바와 같은 구성으로 본 발명에 따른 발광다이오드 패키지를 제조하기 위한 LED 리드패널(1a)이 형성된 다음에는, 도 4에 도시된 바와 같은 구성으로 제1 및 제2패키지 하우징(50, 51)과 힛트 싱크(53)가 순차적으로 고정된다.

<47> 즉, 상기 LED 리드패널(1a)에 리드프레임(40)과 일체형으로 형성된 한 쌍의 연결프레임(41)의 상부에는 소정형상(본 발명의 실시예에서는 사각형상)의 제1 패

키지하우징(50)이 위치하게 되고, 상기 연결프레임(41)의 하부에는 제 2패키지하우징(51)이 위치하게 되는 것이다.

<48> 상기 제1 패키지하우징(50)의 중앙부는 몰딩재를 수용하기 위해 함몰 형성되며, 그 바닥에 상기 연결프레임(41)의 단자부 및 중공부(44)를 노출시키는 관통홀(58)을 갖는다. 상기 관통홀(58)은 상기 함몰형성된 부분과 동일한 면적을 가질 수 있으나, 도시한 바와 같이 그 보다 좁은 면적을 가질 수 있다. 상기 함몰형성된 부분 및 관통홀(58)은 이후 패키지하우징의 개구부를 형성한다. 상기 함몰형성된 부분의 내벽에는 후술하는 LED 패키지의 몰딩재를 수용할 수 있도록 단턱부(59)가 형성되어 있다.

<49> 상기 제2 패키지하우징(51)의 상부 면에는 상기 연결프레임(41)을 수용할 수 있도록 연결프레임(41)과 동일형상의 수용홈(52)이 형성되어 있으며, 그 하부 면에서는 후술하는 힛트 싱크(53)가 삽입 장착될 수 있는 힛트 싱크 안착홈(57)이 형성되어 있다.

<50> 또한, 상기와 같이 형성되는 제2 패키지하우징(51)의 중앙에는 상기 힛트 싱크(53)의 삽입 돌출부(54)가 수용될 수 있는 원형의 관통홀(55)이 형성되어 있으며, 상기 삽입 돌출부(54)의 내부공간은 후술하는 LED칩(60)이 안착 고정되는 LED 안착부(56)가 되는 것이다.

<51> 한편, 본 발명을 구성하는 제1 및 제2 패키지하우징(50, 51)은 그 재질로서 열전도성 플라스틱(Thermal Conductive Plastics) 또는 세라믹스(High Thermal Conductive Ceramics)를 이용할 수 있다. 상기 열전도성 플라스틱으로는

ABS(Acrylonitrile Butadiene Styrene), LCP(Liquid Crystalline Polymer), PA(Polyamide), PPS(Polyphenylene Sulfide), TPE(Thermoplastic Elastomer) 등이 있으며, 고열전도성 세라믹스에는 알루미나(Al_2O_3), 탄화규소(SiC) 및 질화알루미늄(AlN) 등이 있는데, 상기한 세라믹스 중에서 질화알루미늄(AlN)은 알루미나와 동등한 물성을 가지며, 열전도성에서 알루미나보다 우수하여 많이 활용되고 있는 실정이다.

<52> 적용된 제1 및 제2 패키지하우징(50, 51)의 재질이 열전도성 플라스틱인 경우에는 제1 패키지하우징(50)과 제2 패키지하우징(51)을 LED 리드패널(1a)의 좌우대칭 구성으로 형성되는 연결프레임(41)의 상하부에 위치시키고 고온에서 압착하여 부착 고정하는 방식을 취하고 있다. 여기서, 중요한 고려사항은 제1 패키지하우징(50) 내부에 형성되는 관통홀(58) 및 단턱부(59)의 형태이다. 즉 제1 및 제2 패키지하우징(50, 51)을 LED 리드패널(1a)에 위치시킨 다음, 상기 관통홀(58) 및 단턱부(59)의 형태와 대응하는 형태의 돌출부가 형성된 압착수단으로 고온 압착함으로써 관통홀(58) 및 단턱부(59)가 형성되는 것이다.

<53> 반면에, 적용되는 제1 및 제2 패키지하우징(50, 51)의 재질이 세라믹스인 경우에는 제1 패키지하우징(50)과 제2 패키지하우징(51)을 정확한 치수 및 형태로 이미 제작하게 된다. 즉, 세라믹스는 1000℃ 이상의 고온에서 원하는 형태로 제조되는 물성으로 인하여 최종 적용단계에서 원하는 형태로 성형하기는 불가능하기 때문에 제1 및 제2 패키지하우징(50, 51)을 정확한 치수 및 형태로 이미 제작하게 되는 것이다. 이때, 제작되는 제1 패키지하우징(50)에는 상기한 관통홀(58) 및 단턱부

(59)가 형성되도록 하여야 한다.

<54> 따라서, 상기와 같이 이미 제작된 세라믹 재질의 제1 및 제2 패키지하우징(50, 51)을 LED 리드패널(1a)의 연결프레임(41)의 상하부에 위치시키고 접착력이 큰 접착제 등을 이용하여 부착 고정하게 되는 것이다.

<55> 상기한 바와 같은 구성으로 LED 리드패널(1a)에 조립되는 본 발명의 발광다이오드 패키지는, 도 5에 도시된 바와 같이, LED 리드패널(1a)에 형성된 리드프레임(40) 및 이와 일체형이면서 좌우대칭형으로 형성되는 연결프레임(41)으로 이루어지는 각각의 단위체에 형성된다.

<56> 또한, 상기와 같이 형성되는 본 발명의 발광다이오드 패키지를 구성하는 힛트 싱크(53)의 중앙부인 LED 안착부(56)에는 하나 이상의 LED칩(60)이 부착 고정되며, 이는 연결프레임(41)과 연결와이어(62)로 전기적으로 극성 연결되어진다.

<57> 또한, 상기 LED 안착부(56)에는 실장된 LED칩(60)을 전기적으로 보호하도록 제너다이오드(Zener Diode; 61)가 실장되어 연결와이어(62)로 극성 연결될 수 있다. 이 제너다이오드(Zener Diode; 60)는 반도체 p-n 또는 n-p 접합으로 비교적 큰 역방향의 전압을 가했을 때, 어떤 전압으로 급격하게 큰 전류가 흐르기 시작하고, 그 전압이 일정하게 유지되는 현상을 이용한 반도체 디바이스로서, LED 패키지에 적용되면 정전기 혹은 급격한 전류가 공급되는 경우에도 정전압을 유지할 수 있어 제품에 대한 신뢰성을 증대시킬 수 있는 것이다.

<58> 도 6은 본 발명에 따른 힛트 싱크를 갖는 발광다이오드 패키지를 도시한 상부 사시도 및 하부 사시도이고, 도 7은 본 발명에 따른 힛트 싱크를 갖는 발광다이

오드 패키지를 도시한 단면도이며, 도 8은 본 발명에 따른 힛트 싱크를 갖는 발광다이오드 패키지에 몰딩되는 몰딩재 및 발광렌즈를 도시한 단면도이다.

<59> 본 발명에 따른 발광다이오드 패키지는 상기한 제조과정을 거쳐 LED 리드패널(1a) 상에 다수 형성되어지며, 형성된 각각의 발광다이오드 패키지는 제1 및 제2 패키지하우징(50, 51)을 중심으로 하여 LED 리드패널(1a)로부터 절단되어 취출된다.

<60> 상기 취출된 각각의 본 발명에 따른 발광다이오드 패키지는, 도 6에 도시된 바와 같이, 적용되는 PCB기판의 연결단자에 부합하도록 리드프레임(40)이 소정 길이 및 각도로 절곡되는 것이다.

<61> 또한, 도 6의 (b) 및 도 7에 도시된 바와 같이, 본 발명에 따른 발광다이오드 패키지는 힛트 싱크(53)가 제2 패키지하우징(51)의 하부로부터 삽입 고정되는 형태로 형성되어 있으면서, 상기 제2 패키지하우징(51)의 하부 면보다 돌출되어 있는 것을 특징으로 한다. 즉 발광다이오드 패키지가 제조되어 실제 적용되는 경우에 제2 패키지하우징(51)의 하부 면보다 하부로 돌출된 힛트 싱크(40)의 면과 방열부재(미도시)가 직접 접촉하여 방열효과를 극대화시키기 위함이다.

<62> 또한, 본 발명에 따른 발광다이오드 패키지는, 도 7에 도시된 바와 같이, 제1 패키지하우징(50)의 내부공간에 단턱부(59)가 이중으로 형성되어 있으며, 이는 후술하는 패키지 몰딩재를 몰딩하거나 발광렌즈를 장착하는데 필요한 고정턱으로 작용하기 위함이다.

<63> 또한, 본 발명에 따른 발광다이오드 패키지를 구성하는 힛트 싱크(53)의 삽

입 돌출부(54)의 외면부에는 상기 제2 패키지하우징(51)의 관통홀(55)의 내벽에 형성된 요홈부에 삽입 고정될 수 있도록 걸림턱(54a)이 형성되어 있어 상기 제2 패키지하우징(51)의 관통홀(55)에 힛트 싱크(53)의 삽입 돌출부(54)가 견고하게 고정될 수 있도록 한다. 걸림턱(54a)은 상기 힛트 싱크의 본체에 형성될 수도 있다. 상기 걸림턱(54a)은 상기 히트 싱크(53)의 삽입 돌출부(54)의 최상측 가장자리에 형성될 수 있다. 이때, 상기 걸림턱(54a)은 상기 제2 패키지하우징(51)의 상면에 결합되어 힛트 싱크(53)를 고정시킨다.

<64> 한편, 본 발명에 따른 힛트 싱크를 갖는 발광다이오드 패키지는 제1 패키지하우징(50)의 내부공간에 LED칩(60) 및 연결와이어(62)를 보호하면서 LED칩(60)으로부터 발광되는 빛을 투과시키는 몰딩재(65)가 몰딩된다.

<65> 도 8의 (a)에 도시된 바와 같이, 상기 몰딩재(65)는 에폭시 수지일 수 있으며, LED칩(60)으로부터 발광되는 빛을 변환하기 위한 형광물질을 함유할 수 있다.

<66> 이에 더하여, 상기 몰딩재(65)는 빛의 고른 분포를 위하여 디퓨저를 함유할 수 있다.

<67> 또한, 도 8의 (b)에 도시된 바와 같이, 상기 몰딩재(65)가 형광물질을 함유하는 에폭시 수지인 경우, 보다 안정한 몰딩효과를 위하여 그 상부에 에폭시 수지(67)로서 한층 더 몰딩 처리할 수 있다.

<68> 또한, 도 8의 (c)에 도시된 바와 같이, 본 발명에 따른 발광다이오드 패키지는 상기 도 8의 (a) 및 (b)에서와 같이 몰딩재(65)로서 몰딩 처리된 다음 보다 효과적인 발광 및 보다 안정적인 내부 실장물(LED칩 및 본딩와이어)의 보호를 위하여

발광렌즈(66)를 제1 패키지하우징(50)의 상부 단턱부(59b)에 고정시킬 수도 있다.

<69> 본 발명은 상기한 각각의 도면에 도시된 바와 같은 구체적인 실시예로 적용되었으며, 본 발명이 이러한 구체적인 실시예에 한정되는 것은 아니라 본 발명의 기술사상을 벗어나지 않는 범위에서 다양하게 변형 실시 가능한 것이다.

【발명의 효과】

<70> 상술한 바와 같이, 본 발명은 LED 리드패널에 형성된 리드프레임 및 연결프레임의 상하부에 패키지하우징을 형성한 다음, 이의 내부공간에 LED칩이 실장되는 힛트 싱크가 삽입 고정되는 발광다이오드 패키지를 제조함으로써 방열효율이 향상된 발광다이오드 패키지를 양산할 수 있다는 이점이 있다. 또한, 발광다이오드 패키지의 패키지하우징의 내부공간을 에폭시 수지 또는 형광물질이 혼합된 에폭시 수지로 몰딩함으로써 단색 또는 백색 발광다이오드를 구현할 수 있다. 본 발명의 이러한 발광다이오드 패키지 제조방법이 기존의 일반 탑 발광다이오드 패키지와 유사하여 빠른 속도로 많은 량의 발광다이오드 패키지를 양산할 수 있다는 효과가 있다.

【특허청구범위】

【청구항 1】

개구부 및 상기 개구부에 의해 노출된 관통홀을 갖는 패키지하우징;

상기 패키지하우징의 개구부 내에 노출된 내측부 및 상기 내측부에서 연장되어 상기 패키지하우징의 외부로 돌출된 외측부를 갖는 리드프레임; 및

상기 패키지하우징의 하부에 결합되어 상기 개구부에 의해 일부가 노출된 힛트 싱크를 포함하는 발광 다이오드 패키지.

【청구항 2】

청구항 1에 있어서, 상기 패키지하우징은 상기 리드프레임을 사이에 두고 상호 결합된 제1 하우징부 및 제2 하우징부를 포함하되, 상기 개구부는 상기 제1 하우징부에 형성된 발광다이오드 패키지.

【청구항 3】

청구항 2에 있어서, 상기 개구부의 내벽에는 단턱부가 형성된 발광다이오드 패키지.

【청구항 4】

청구항 2에 있어서, 상기 제2 하우징부는 그 상부에 상기 리드프레임을 수용하는 수용홈을 갖는 발광다이오드 패키지.

【청구항 5】

청구항 1 또는 2에 있어서, 상기 힛트 싱크는 상기 패키지하우징의 하부면에

대응하는 힛트 싱크 본체; 및 상기 힛트 싱크 본체의 중앙부에서 상향 돌출되어 상기 패키지하우징의 관통홀에 삽입된 삽입돌출부를 포함하는 발광다이오드 패키지.

【청구항 6】

청구항 5에 있어서, 상기 힛트 싱크는 상기 힛트 싱크 본체 및 상기 삽입돌출부의 외측면들 중 적어도 일측에 결합턱을 갖는 발광 다이오드 패키지.

【청구항 7】

각각 중앙에 중공부를 구비하는 LED 리드프레임들을 갖는 리드패널을 마련하고,

상기 LED 리드프레임들의 중공부들 주위에 패키지하우징들을 형성하되, 상기 각 패키지하우징은 상기 중공부 및 상기 LED 리드프레임의 일부를 노출시키는 개구부 및 상기 중공부 하부에 관통홀을 갖고,

상기 패키지하우징의 하부에 힛트 싱크를 결합하되, 상기 힛트 싱크의 일부는 상기 개구부에 의해 노출되고,

상기 개구부에 의해 노출된 상기 힛트 싱크에 LED칩을 실장하고,

상기 LED칩과 상기 개구부에 노출된 LED 리드프레임의 일부를 전기적으로 연결하고,

상기 리드패널에서 상기 LED 리드프레임들을 절단하여 개별 소자를 제공하는 것을 포함하는 발광 다이오드 패키지 제조방법.

【도면】

【도 1a】

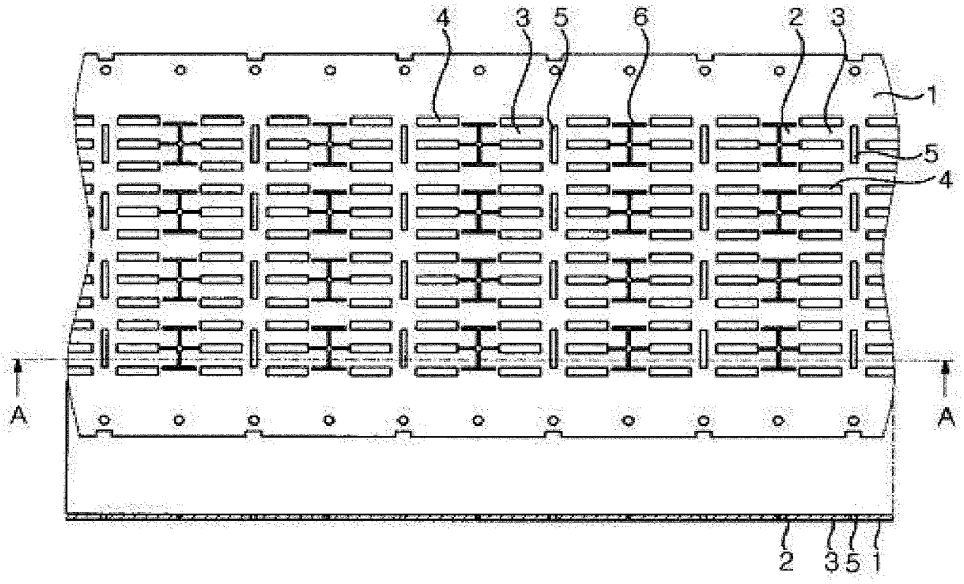

【도 1b】

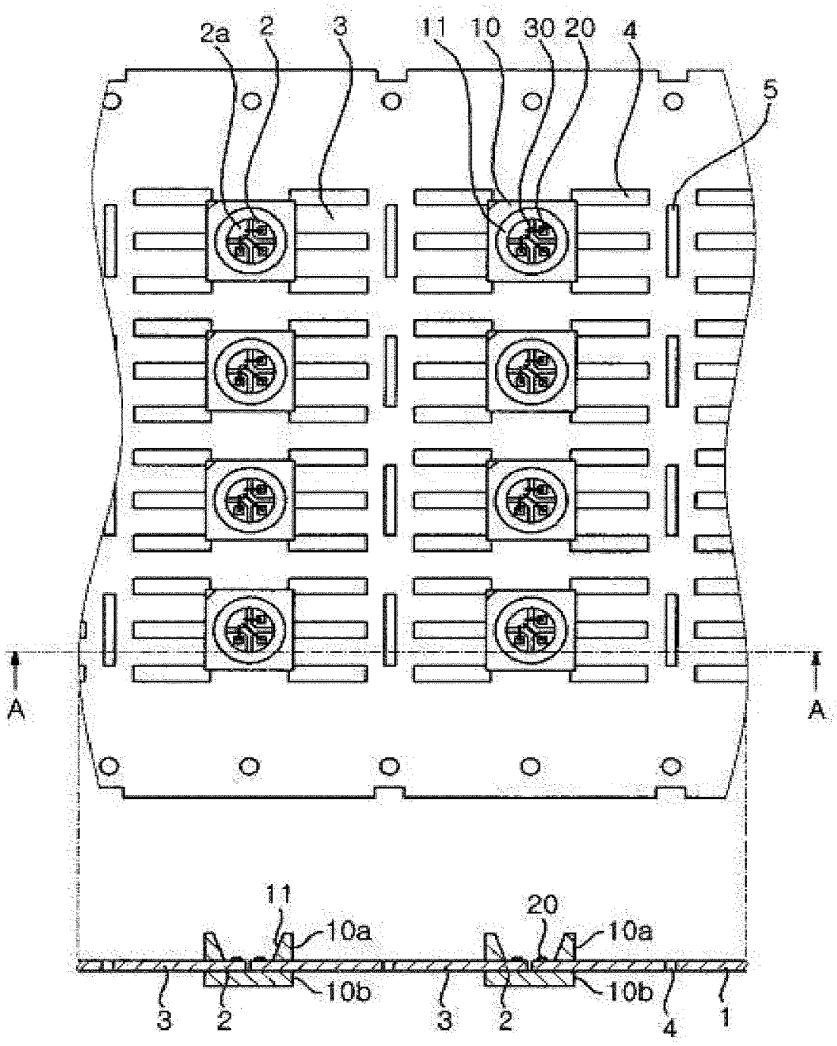

【도 2】

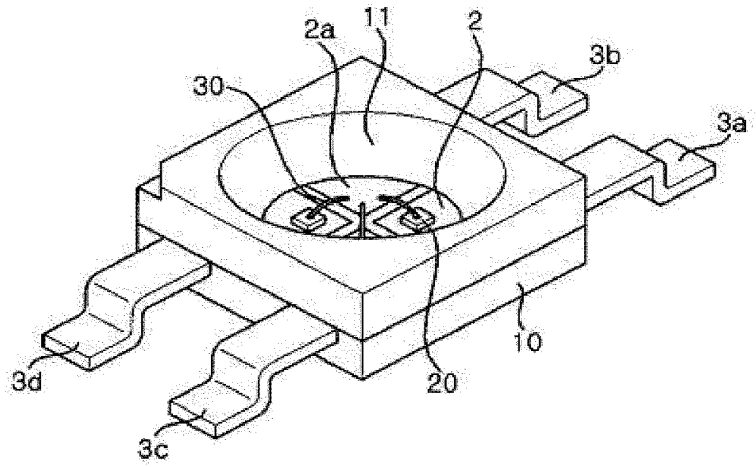

(a)

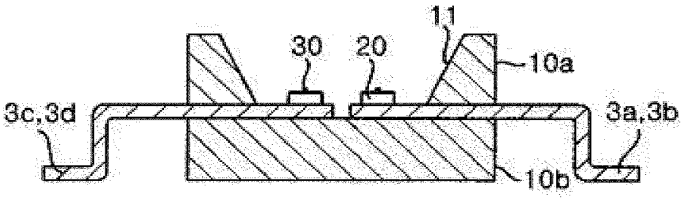

(b)

【도 3】

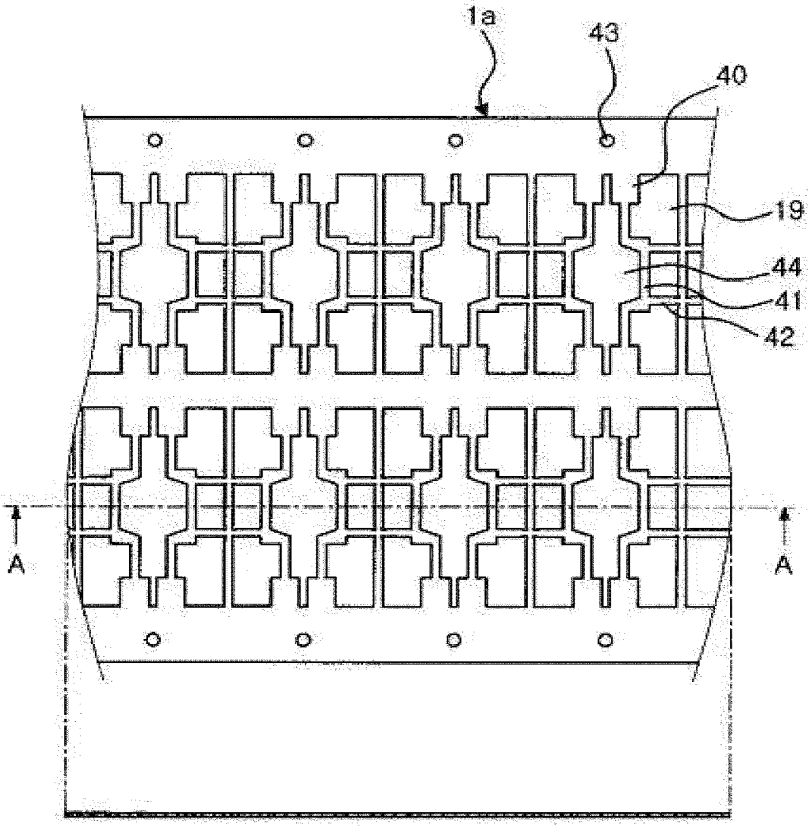

【도 4】

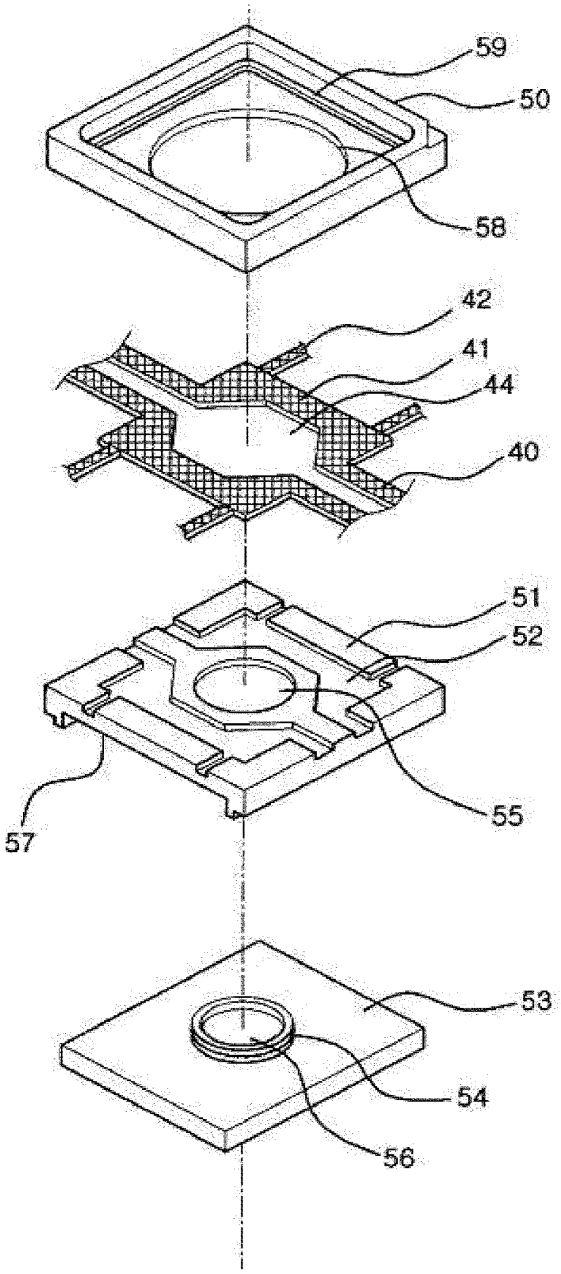

【도 5】

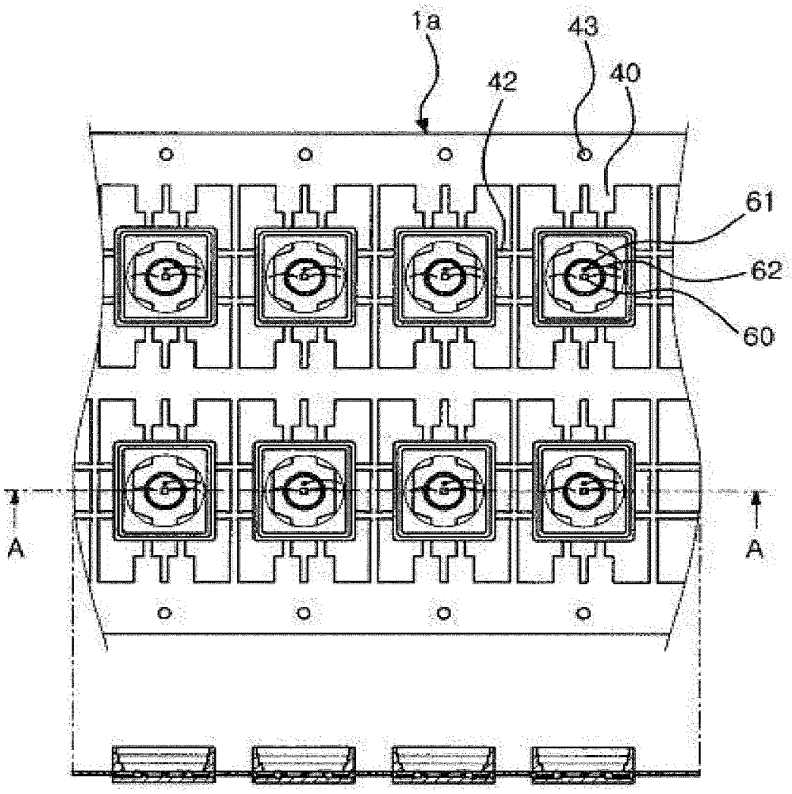

【도 6】

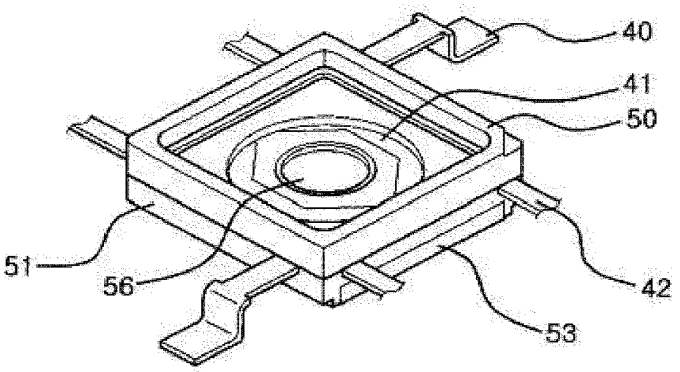

(a)

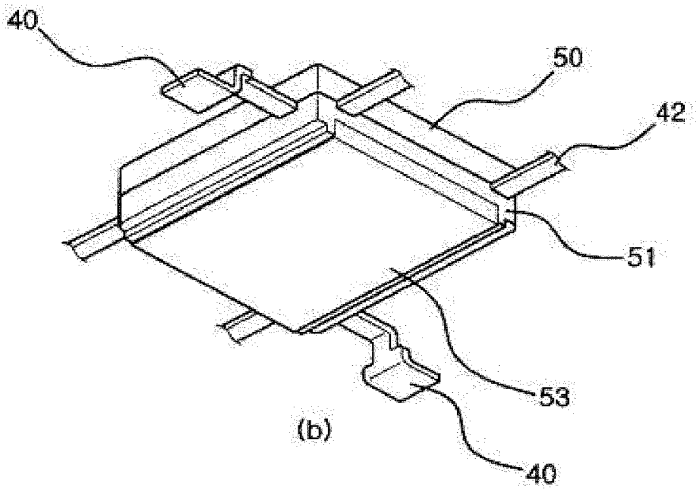

(b)

【도 7】

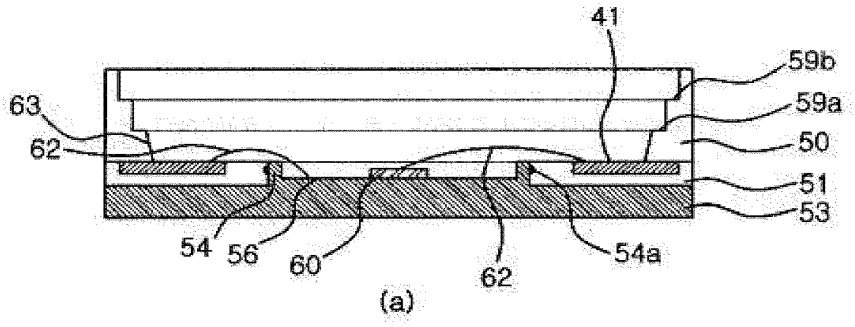
41
59b
59a
63
62
50
51
53
54
56
60
62
54a

(a)

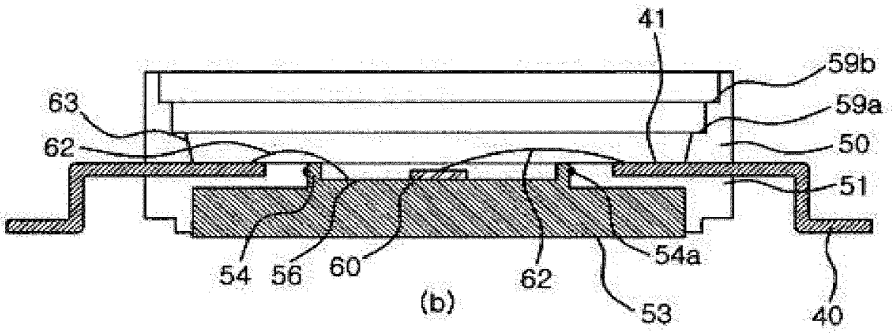
41
59b
59a
63
62
50
51
54
56
60
62
54a
53
40

(b)

【도 8】

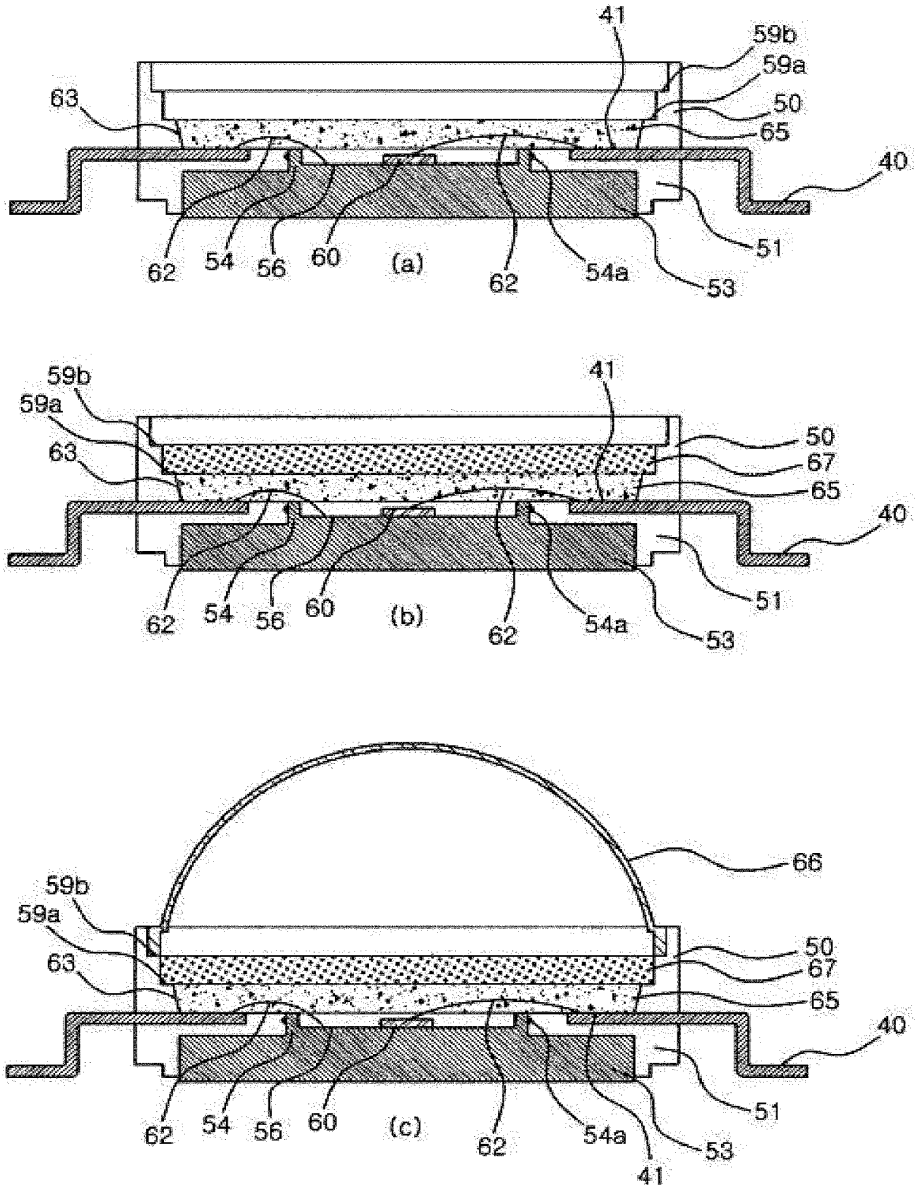
41
59b
59a
63
50
65
40
51
62
54
56
60
(a)
62
54a
53
59b
59a
41
63
50
67
65
40
51
62
54
56
60
(b)
62
54a
53
66
59b
59a
63
50
67
65
40
51
62
54
56
60
(c)
62
54a
53
41

Document made available under the Patent Cooperation Treaty (PCT)

International application number: PCT/KR2005/003346

International filing date: 07 October 2005 (07.10.2005)

Document type: Certified copy of priority document

Document details: Country/Office: KR
Number: 10-2005-0000269
Filing date: 03 January 2005 (03.01.2005)

Date of receipt at the International Bureau: 08 December 2005 (08.12.2005)

Remark: Priority document submitted or transmitted to the International Bureau in compliance with Rule 17.1(a) or (b)

World Intellectual Property Organization (WIPO) - Geneva, Switzerland
Organisation Mondiale de la Propriété Intellectuelle (OMPI) - Genève, Suisse

대 한 민 국 특 허 청
KOREAN INTELLECTUAL PROPERTY OFFICE

별첨 사본은 아래 출원의 원본과 동일함을 증명함.

This is to certify that the following application annexed hereto is a true copy from the records of the Korean Intellectual Property Office

출 원 번 호 : Application Number	특허출원 2005년 제 0000269 호 10-2005-0000269
출 원 일 자 : Date of Application	2005년 01월 03일 JAN 03, 2005
출 원 인 : Applicant(s)	서울반도체 주식회사 SEOUL SEMICONDUCTOR CO.,LTD

2005 년 11 월 23 일

특 허 청 장
COMMISSIONER

【서지사항】

【서류명】	특허출원서
【권리구분】	특허
【수신처】	특허청장
【참조번호】	0288
【제출일자】	2005.01.03
【발명의 국문명칭】	히트싱크 지지링을 갖는 리드프레임, 그것을 사용한 발광 다이오드 패키지 제조방법 및 그것에 의해 제조된 발광 다이오드 패키지
【발명의 영문명칭】	LEADFRAME HAVING A HEAT SINK SUPPORT RING, FABRICATING METHOD OF THE LIGHT EMITTING DIODE PACKAGE USING THE SAME AND LIGHT EMITTING DIODE PACKAGE FABRECATED BY THE METHOD
【출원인】	
【명칭】	서울반도체 주식회사
【출원인코드】	1-1998-099837-1
【대리인】	
【성명】	이수완
【대리인코드】	9-1998-000352-8
【포괄위임등록번호】	2003-055257-1
【대리인】	
【성명】	조진태
【대리인코드】	9-2003-000088-1
【포괄위임등록번호】	2003-055260-8
【대리인】	
【성명】	윤종섭
【대리인코드】	9-2003-000089-8

【포괄위임등록번호】 2003-055261-5

【대리인】

【성명】 이성규

【대리인코드】 9-2003-000083-0

【포괄위임등록번호】 2003-055259-5

【발명자】

【성명】 이건영

【출원인코드】 4-1999-042969-7

【발명자】

【성명】 이정훈

【출원인코드】 4-2000-019288-2

【심사청구】 청구

【취지】 특허법 제42조의 규정에 의한 출원, 특허법 제60조의 규정에 의한 출원심사 를 청구합니다. 대리인

이수완 (인) 대리인

조진태 (인) 대리인

윤종섭 (인) 대리인

이성규 (인)

【수수료】

【기본출원료】	0	면	38,000	원
【가산출원료】	28	면	0	원
【우선권주장료】	0	건	0	원
【심사청구료】	11	항	461,000	원
【합계】	499,000 원			
【감면사유】	중소기업			
【감면후 수수료】	249,500 원			

【첨부서류】 1.중소기업기본법시행령 제2조에의한 중소기업에 해당함을 증명하는 서류[사업자등록증 1통, 중소기업기준검토표 1통, 반기대차대조표 1 통]_3통

【요약서】

【요약】

히트싱크 지지링을 갖는 리드프레임, 그것을 채택하는 발광 다이오드 패키지 및 그것을 사용한 발광 다이오드 패키지 제조방법이 개시된다. 상기 리드프레임은 히트싱크를 지지하기 위한 지지링을 갖는다. 외부프레임이 상기 지지링과 이격되어 상기 지지링을 둘러싼다. 적어도 두개의 연결단자들이 상기 지지링의 대향하는 양측면에서 상기 외부프레임과 상기 지지링을 연결한다. 또한, 적어도 두개의 리드단자들이 상기 외부프레임에서 상기 지지링을 향해 연장된다. 상기 리드단자들은 상기 지지링과 이격된다. 이에 따라, 상기 리드프레임에 히트싱크를 삽입한 후, 삽입몰딩기술을 사용하여 패키지 본체를 형성할 수 있어, 우수한 방열특성을 갖는 발광 다이오드 패키지를 쉽게 제공할 수 있다.

【대표도】

도 1

【색인어】

리드프레임, 히트싱크, 패키지 본체, 리드단자, 삽입몰딩기술

【명세서】

【발명의 명칭】

히트싱크 지지링을 갖는 리드프레임, 그것을 사용한 발광 다이오드 패키지 제조방법 및 그것에 의해 제조된 발광 다이오드 패키지{LEADFRAME HAVING A HEAT SINK SUPPORT RING, FABRICATING METHOD OF THE LIGHT EMITTING DIODE PACKAGE USING THE SAME AND LIGHT EMITTING DIODE PACKAGE FABRECATED BY THE METHOD}

【도면의 간단한 설명】

<1> 도 1은 본 발명의 일 실시예에 따른 리드프레임을 설명하기 위한 사시도이다.

<2> 도 2는 본 발명의 일 실시예에 따른 발광 다이오드 패키지를 설명하기 위한 공정 순서도이다.

<3> 도 3 내지 도 9는 도 2의 공정 순서도에 따라 발광 다이오드 패키지를 제조하는 방법을 설명하기 위한 도면들이다.

<4> (도면의 주요부호에 대한 간략한 설명)

<5> 10: 리드프레임, 11: 외부프레임,

<6> 13: 히트싱크 지지링, 15a, 15b: 연결단자들,

<7> 17a, 17b, 17c, 19a, 19b, 19c: 리드단자들,

<8> 20: 히트싱크, 21: 기저부,

<9> 23: 돌출부, 23a: 지지링 수용홈,

<10> 30, 30a: 패키지 본체, 40, 41, 43, 45: 발광 다이오드 다이

【발명의 상세한 설명】

【발명의 목적】

【발명이 속하는 기술분야 및 그 분야의 종래기술】

<11> 본 발명은 리드프레임, 상기 리드프레임을 사용한 발광 다이오드 패키지 제조방법 및 상기 방법에 의해 제조된 발광 다이오드 패키지에 관한 것으로, 보다 상세하게는, 히트싱크가 패키지 본체로부터 분리되는 것을 방지하기 위해, 삽입몰딩 기술을 사용하여 패키지 본체를 형성하기 전, 히트싱크를 리드프레임에 고정시킬 수 있는 히트싱크 지지링을 갖는 리드프레임, 상기 리드프레임을 사용한 발광 다이오드 패키지 제조방법 및 그것에 의해 제조된 발광 다이오드 패키지에 관한 것이다.

<12> 발광 다이오드(light emitting diode; LED)가 조명용 광원과 같은 용도로 사용되기 위해서는, 수십 루멘 이상의 광출력(luminous power)을 가질 것이 요구된다. 발광 다이오드의 광출력은 대체로 입력전력(input power)에 비례한다. 따라서, 발광다이오드에 입력되는 전력을 증가시키어 높은 광출력을 얻을 수 있다. 그러나, 입력 전력의 증가는 발광 다이오드의 접합 온도(junction temperature)를 증가시킨다. 발광 다이오드의 접합 온도 증가는 입력 에너지가 가시광으로 변환되는 정도를 나타내는 발광 효율(photometric efficiency)의 감소로 이어진다. 이에, 입력전력의 증가에 따른 발광 다이오드의 접합 온도 증가를 방지하기 위한 구조가 필요하다.

<13> 이러한 구조의 발광 다이오드 패키지가 미국특허 제6,274,924(B1)호(명칭: 표면 실장 LED 패키지)에 개시되어 있다. 이에 따르면, LED 다이가 히트 싱크 상에 열적으로 커플링되어 있기 때문에, 상기 LED 다이를 낮은 접합 온도로 유지할 수 있다. 따라서, LED 다이에 상대적으로 큰 입력전력을 공급할 수 있어서 높은 광출력을 얻을 수 있다.

<14> 하지만, 이러한 구조, 즉 큰 입력전력으로 높은 광출력을 얻을 수 있는 발광 다이오드 패키지(이하, LED 패키지라 함)는, 최근까지 다양한 구조 및 형상으로 제안되지 못하고 있는 실정이다. 이는 LED 패키지가 그 간단한 구성에도 불구하고 제품화를 위한 기술적 곤란성을 가지고 있으며, 특히 패키지 자체에서 발생하는 열해석이 쉽지 않고 그 전문가도 거의 없어서, 실질적으로 그 개발이 제한적으로 진행되고 있기 때문이다. 하지만, 이러한 LED 패키지는, 조명용 뿐만 아니라 대형 TV나 디스플레이 등에 적용될 예정이고, 향후 그 응용분야도 매우 넓기 때문에, 종래의 제품과는 다른 구조 및 형태의 우수한 방열특성을 가지는 다양한 LED 패키지들이 요구되고 있는 실정이다.

<15> 한편, 종래의 이러한 LED 패키지는, 리드단자들과 히트싱크가 분리되고, 이들이 절연재질의 하우징을 매개하여 상호 결합된 구조를 가지고 있어서, 그 제조가 상대적으로 곤란한 문제가 있다.

【발명이 이루고자 하는 기술적 과제】

<16> 본 발명이 이루고자 하는 기술적 과제는, 우수한 방열특성을 가지어 큰 입력전력을 입력하더라도 LED 다이의 접합온도 증가를 방지할 수 있어서 높은 광출력을

얻을 수 있는 LED 패키지를 제공하는 것이다.

<17> 본 발명이 이루고자 하는 다른 기술적 과제는, 리드단자와 히트싱크가 상호 결합된 구조로 용이하게 제조될 수 있는 LED 패키지를 제공하는 것이다.

<18> 본 발명이 이루고자 하는 또 다른 기술적 과제는, LED 패키지를 쉽게 제조할 수 있는 리드프레임을 제공하는 것이다.

【발명의 구성】

<19> 상기 기술적 과제들을 이루기 위하여, 본 발명은 히트싱크 지지링을 갖는 리드프레임, 그것을 사용한 발광 다이오드 패키지 제조방법 및 상기 방법에 의해 제조된 발광 다이오드 패키지를 제공한다.

<20> 본 발명의 일 태양에 따른 상기 리드프레임은 히트싱크를 지지하기 위한 히트싱크 지지링을 갖는다. 외부프레임이 상기 지지링과 이격되어 상기 지지링을 둘러싼다. 한편, 적어도 두개의 연결단자들이 상기 지지링의 대향하는 양측면에서 상기 외부프레임과 상기 지지링을 연결한다. 또한, 적어도 두개의 리드단자들이 상기 외부프레임에서 상기 지지링을 향해 연장된다. 상기 리드단자들은 상기 지지링과 이격된다. 이에 따라, 상기 리드프레임에 히트싱크를 삽입한 후, 삽입몰딩기술을 사용하여 패키지 본체를 형성할 수 있어, LED 패키지를 쉽게 제조할 수 있다.

<21> 상기 적어도 두개의 리드단자들은 상기 지지링의 대향하는 양측에 각각 하나 이상 배치되는 것이 바람직하다. 또한, 상기 리드단자들은 상기 연결단자들과 직교하는 방향으로 배치될 수 있다.

<22> 본 발명의 다른 태양에 따른 상기 발광 다이오드 패키지 제조방법은 리드프

레임 및 히트싱크를 준비하는 것을 포함한다. 상기 리드프레임은 히트싱크를 지지하기 위한 히트싱크 지지링을 갖는다. 외부프레임이 상기 지지링과 이격되어 상기 지지링을 둘러싼다. 한편, 적어도 두개의 연결단자들이 상기 지지링의 대향하는 양측면에서 상기 외부프레임과 상기 지지링을 연결하여 상기 지지링을 상기 외부프레임에 고정시킨다. 또한, 적어도 두개의 리드단자들이 상기 외부프레임에서 상기 지지링을 향해 연장된다. 상기 리드단자들은 상기 지지링과 이격된다. 한편, 상기 히트싱크는 상기 지지링에 삽입되어 고정될 수 있도록 준비된다. 상기 히트싱크를 상기 지지링에 삽입하여 고정시킨다. 그 후, 삽입몰딩 기술을 사용하여 상기 히트싱크 및 상기 히트싱크 주변의 상기 리드단자들 및 연결단자들 일부분들을 몰딩하여 지지하는 패키지 본체를 형성한다. 이때, 상기 패키지 본체는 상기 히트싱크의 상단부 및 상기 리드단자들의 일부들을 노출시키는 개구부를 갖는다. 이에 따라, 상기 히트싱크와 리드단자가 상호 결합된 구조로 LED 패키지를 제조할 수 있다.

<23> 본 발명의 또 다른 태양에 따른 발광 다이오드 패키지는 히트싱크 지지링을 포함한다. 히트싱크가 상기 히트싱크 지지링에 삽입되어 위치한다. 한편, 적어도 두개의 리드단자들이 상기 지지링 및 히트싱크와 이격되어 상기 지지링의 양측에 배치된다. 또한, 패키지 본체가 상기 히트싱크 및 상기 리드단자들을 몰딩하여 지지한다. 상기 패키지 본체는 상기 히트싱크의 상단부 및 상기 리드단자들의 일부분들을 노출시키는 개구부를 갖는다. 이에 따라, 상기 히트싱크와 상기 지지링이 결합된 구조로 LED 패키지 제조가 용이하며, 상기 히트싱크가 상기 패키지 본체로부터 분리되는 것을 방지할 수 있다.

<24> 이에 더하여, 상기 히트싱크의 하부면은 외부로 노출된다. 따라서, 상기 히트싱크의 하부면을 통해 열이 방출된다.

<25> 한편, 상기 히트싱크는 기저부 및 상기 기저부의 중앙부분에서 상향 돌출된 돌출부를 포함할 수 있다. 이때, 상기 돌출부가 상기 지지링에 삽입된다. 본 실시예에 따르면, 열방출 표면의 표면적을 유지하면서, 발광 다이오드 패키지의 크기를 감소시킬 수 있다.

<26> 또한, 상기 히트싱크는 상기 돌출부의 측면에 상기 지지링에 체결되기 위한 지지링 수용홈을 더 포함할 수 있다. 상기 지지링은 상기 수용홈에 체결되어, 상기 히트싱크를 강하게 고정시킨다.

<27> 상기 패키지 본체는 상기 히트싱크를 상기 지지링에 삽입한 후, 사출성형하여 형성된 플라스틱 수지이다. 따라서, 복잡한 구조를 갖는 패키지 본체가 쉽게 형성될 수 있으며, 상기 패키지 본체와 상기 히트싱크가 강하게 결합된다.

<28> 상기 발광 다이오드 패키지는 상기 히트싱크 상부면에 탑재된 적어도 하나의 발광 다이오드 다이 및 상기 발광 다이오드 다이와 상기 리드단자들을 전기적으로 연결하는 본딩와이어들을 더 포함한다.

<29> 이하, 본 발명의 실시예들을 첨부된 도면들을 참조하여 상세하게 설명한다.

<30> 도 1은 본 발명의 일 실시예에 따른 리드프레임(10)을 설명하기 위한 사시도이다.

<31> 도 1을 참조하면, 리드프레임(10)은 내부에 히트싱크를 삽입할 수 있는 히트싱크 지지링(13)을 갖는다. 상기 지지링(13)은, 도시된 바와 같이, 원형 고리모양

일 수 있으나, 이에 한정되는 것은 아니며, 다각형 고리 모양일 수 있다.

<32> 한편, 외부프레임(11)이 상기 지지링(13)을 둘러싼다. 상기 외부프레임(11)은 상기 지지링(13)과 이격되어 위치한다. 외부프레임(11)은, 도시된 바와 같이, 정사각형일 수 있으나, 이에 한정되는 것은 아니며, 원형 또는 다른 다각형일 수 있다.

<33> 상기 외부프레임(11)과 상기 지지링(13)은 적어도 두개의 연결단자들(15a, 15b)에 의해 연결된다. 상기 연결단자들(15a, 15b)은 상기 지지링(13)의 대향하는 양측면에 위치하여 지지링(13)을 외부프레임(11)에 고정시킨다. 상기 연결단자들(15a, 15b) 이외에 추가적인 연결단자들이 상기 지지링(13)과 상기 외부프레임(11)을 연결할 수 있다.

<34> 또한, 적어도 두개의 리드단자들(17a, 17b, 17c, 19a, 19b, 19c)이 상기 외부프레임(11)에서 상기 지지링(13)을 향해 연장된다. 다만, 상기 리드단자들은 상기 지지링(13)과 이격된다. 도시된 바와 같이, 상기 리드단자들(17a, 17b, 17c, 19a, 19b, 19c)은 상기 지지링(13) 근처에서 면적이 더 넓은 종단부를 가질 수 있다. 한편, 상기 리드단자들은 상기 지지링(13)의 대향하는 양측에 배치되는 것이 바람직하다.

<35> 상기 리드단자들은 탑재될 발광 다이오드 다이의 종류 및 개수와 본딩와이어 연결방식에 의해 필요한 수가 정해지나, 다양한 경우에 사용될 수 있도록 상기 리드프레임(10)은 많은 수의 리드단자들을 갖는 것이 바람직하다. 상기 리드단자들은, 도시된 바와 같이, 상기 연결단자들(15a, 15b)과 직교하는 방향으로

배치되어, 동일방향으로 많은 수의 리드단자들이 배치될 수 있다.

<36> 한편, 도 1에 6개의 리드단자들이 도시되어 있으나, 더 적은 수의 리드단자들이 배치될 수 있으며, 추가적인 리드단자들이 더 배치될 수도 있다. 추가적인 리드단자들은 상기 연결단자들(15a, 15b)과 동일한 방향으로 배치될 수 있다.

<37> 본 발명의 일 실시예에 따른 상기 리드프레임(10)은 구리합금인 인청동판을 금형기술을 사용하여 프레스 가공함으로써 제조할 수 있다. 한편, 도 1에는 한개의 리드프레임(10)이 도시되어 있으나, 복수개의 리드프레임(10)들이 하나의 인청동판에서 제조되어 정렬될 수 있다. 특히, 발광 다이오드 패키지를 대량생산하기 위해 하나의 인청동판에 제조된 복수개의 리드프레임(10)들이 사용된다.

<38> 도 2는 본 발명의 일 실시예에 따른 발광 다이오드 패키지 제조방법을 설명하기 위한 공정 순서도이고, 도 3 내지 도 9는 상기 공정순서도에 따라 발광 다이오드 패키지를 제조하는 방법을 설명하기 위한 사시도들 및 평면도들이다.

<39> 도 2를 참조하면, 도 1을 참조하여 설명한 리드프레임(10)을 준비한다(S01).

<40> 상기 리드프레임(10)은, 앞에서 설명한 바와 같이, 인청동판을 프레스 가공함으로써 제조될 수 있으며, 다수의 리드프레임(10)들이 동일한 인청동판에서 제조되어 정렬될 수 있다.

<41> 도 2 및 도 3을 참조하면, 상기 리드프레임(10)의 지지링(13)에 삽입되어 고정될 수 있는 히트싱크(20)를 준비한다. 상기 히트싱크(20)는 발광 다이오드 다이를 탑재할 수 있는 상부면을 갖는다. 상기 히트싱크(20)의 상부면은 상기 지지링(13)에 쉽게 삽입되도록 지지링(13)의 내경보다 작은 것이 바람직하며, 상기 히트

싱크(20)의 측면의 외경은 상기 지지링(13)의 내경보다 큰 것이 바람직하다.

<42> 또한, 상기 히트싱크(20)는 상기 지지링(13)에 체결되기 위한 지지링 수용홈(23a)을 가질 수 있다. 더욱이, 상기 지지링 수용홈(23a)은 상기 지지링(13)에 쉽게 체결되기 위해 나선홈으로 마련될 수 있다.

<43> 한편, 상기 히트싱크(20)는 기저부(21) 및 상기 기저부의 중앙부분에서 상향 돌출된 돌출부(23)을 가질 수 있다. 이때, 상기 지지링 수용홈(23a)은 상기 돌출부(23)의 측면에 위치한다. 상기 기저부(21) 및 상기 돌출부(23)는, 도시된 바와 같이, 원통형일 수 있으나, 이에 한정되는 것은 아니며, 다각통형일 수 있다. 상기 돌출부(23)는 상기 지지링(13)의 내부 모양과 유사한 모양일 수 있으나, 이에 한정되는 것은 아니다. 즉, 상기 지지링(13)은 원형 고리모양이고, 상기 돌출부(23)는 사각통형일 수 있다.

<44> 상기 히트싱크(20)는 열전도율이 높은 금속 또는 열전도 수지로 프레스 가공기술 또는 몰딩기술을 사용하여 제조될 수 있다. 또한, 상기 히트싱크(20)는 상기 리드프레임(10)과 별개의 공정을 사용하여 제조된다. 따라서, 상기 리드프레임(10)을 준비하는 단계(S01)와 상기 히트싱크(20)를 준비하는 단계(S03)는 서로 순서가 바뀔 수도 있으며, 동시에 진행될 수도 있다.

<45> 도 2 및 도 4를 참조하면, 리드프레임(10)의 지지링(13)에 상기 히트싱크(20)를 삽입하여 고정시킨다(S05). 상기 히트싱크(20) 측면의 외경이 상기 지지링(13)의 내경보다 크므로, 상기 히트싱크(20)를 강제 삽입하여 지지링(13)에 고정시킬 수 있다.

<46> 한편, 지지링 수용홈(13a)이 형성된 경우, 상기 지지링(13)은 지지링 수용홈(13a)에 수용되어 상기 히트싱크(20)를 지지한다. 이때, 상기 지지링(13)의 일부가 지지링 수용홈(13a)에 수용되고, 나머지는, 도시된 바와 같이, 상기 돌출부(23)의 외부로 돌출되는 것이 바람직하다. 또한, 상기 지지링 수용홈(13a)이 나선홈일 경우, 상기 히트싱크(20)를 회전시켜 상기 지지링(13)에 체결할 수 있다.

<47> 도 2 및 도 5a를 참조하면, 상기 리드프레임(10)에 히트싱크(20)를 고정시킨 후, 삽입몰딩 기술을 사용하여 패키지 본체(30)를 형성한다(S07). 상기 패키지 본체(30)는 열경화성 수지를 사출성형하여 형성할 수 있다.

<48> 상기 패키지 본체(30)는 히트싱크(20) 주변에 형성되어 지지링(13), 연결단자들(15a, 15b), 리드단자들(17a, 17b, 17c, 19a, 19b, 19c) 및 히트싱크(20)를 지지한다. 상기 연결단자들 및 리드단자들의 일부는 상기 패키지 본체(30)의 외부로 돌출된다. 또한, 상기 패키지 본체(30)는 상기 히트싱크(10)의 상단부 및 상기 리드단자들을 노출시키는 개구부를 갖는다.

<49> 도 5a에 도시된 바와 같이, 상기 개구부에 의해 상기 지지링(13) 및 연결단자들(15a, 15b)의 일부가 노출될 수 있다. 이에 따라, 상기 패키지 본체(30)의 상부에 홈이 형성된다. 이와 달리, 도 5b에 도시된 바와 같이, 상기 패키지 본체(30a)는 상기 히트싱크(20)의 상단부를 제외한 대부분을 덮고, 상기 리드단자들의 일부들만을 노출시킬 수 있다. 따라서, 상기 개구부는 복수개로 형성될 수 있다.

<50> 이 경우에도, 상기 패키지 본체(30a)의 상부에, 도시된 바와 같이, 상기 패키지 본체의 측벽으로 둘러싸이는 홈이 형성되는 것이 바람직하다.

<51> 또한, 상기 히트싱크(20)의 하부면은 외부에 노출된다. 이에 더하여, 상기 기저부(21)의 측면도 노출될 수 있다. 이에 따라, 상기 히트싱크(20)를 통한 열방출을 촉진시킬 수 있다.

<52> 한편, 상기 패키지 본체(30)는, 도 5a 및 도 5b에 도시된 바와 같이, 원통형일 수 있으나, 이에 한정되는 것은 아니며, 사각통형 등의 다각통형일 수 있다.

<53> 상기 히트싱크(20)를 리드프레임(10)에 결합한 후, 열경화성 수지를 사출성형하여 상기 패키지 본체(30)를 형성하므로, 상기 히트싱크(20)와 상기 패키지 본체(30)가 강하게 결합된다.

<54> 도 2 및 도 6a을 참조하면, 상기 패키지 본체(30) 외부로 돌출된 연결단자들(15a, 15b)을 절단하여 제거한다(S09). 그 결과, 절단된 연결단자들(16a, 16b)은 상기 패키지 본체(30)에 남게 되며, 이 연결단자들과 지지링(13)은 상기 히트싱크(20)가 상기 패키지 본체(30)로부터 분리되는 것을 더욱 방지한다.

<55> 한편, 상기 연결단자들을 절단하는 동안, 상기 패키지 본체(30) 외부로 돌출된 리드단자들 중 전류를 공급하기 위해 사용될 리드단자들을 제외하고 나머지 리드단자들을 함께 절단하여 제거할 수 있다. 예컨대, 도 6b에 도시된 바와 같이, 두 개의 리드단자들(17c, 19c)만이 필요한 경우, 나머지 리드단자들(17a, 17b, 19a, 19b)을 절단하여 제거한다. 또한, 도 6c에 도시된 바와 같이, 네개의 리드단자들(17a, 17c, 19a, 19c)이 필요한 경우, 나머지 리드단자들(17b, 19b)을 절단하여 제거한다.

<56> 상기 리드단자들을 절단하여 제거하는 것은, 발광 다이오드 패키지에서 요구

되는 리드단자들 보다 더 많은 수의 리드단자들이 리드프레임(10)에 마련된 경우에 수행되는 공정이다. 따라서, 발광 다이오드 패키지에서 요구되는 리드단자들과 리드프레임(10)에 마련된 리드단자들의 수가 일치하는 경우, 리드단자들을 절단하여 제거하는 공정은 수행되지 않는다. 또한, 여분의 리드단자들이 남아있더라도, 발광 다이오드 패키지의 동작에 영향을 주는 것은 아니므로 상기 여분의 리드단자들을 절단하여 제거하는 것이 반드시 요구되는 공정은 아니다.

<57> 도 2 및 도 7을 참조하면, 상기 히트싱크(20)의 상부면에 발광 다이오드 다이(40)를 탑재한다. 상기 발광 다이오드 다이(40)는 상면 및 하면에 각각 전극을 갖는 1본드 다이 또는 상면에 두개의 전극을 갖는 2본드 다이일 수 있다.

<58> 상기 발광 다이오드 다이(40)가 1본드 다이인 경우, 상기 히트싱크(20)는 전기 전도성의 금속재질인 것이 바람직하며, 이때, 상기 다이(40)는 은 에폭시와 같은 전기 전도성 접착제를 통해 상기 히트싱크(20) 상에 탑재된다. 이와 달리, 상기 히트싱크(20) 상에 탑재되는 발광 다이오드 다이(40)가 모두 2 본드 다이인 경우, 상기 히트싱크(20)는 전기 전도성일 필요가 없으며, 상기 발광 다이오드 다이(40)는 은 에폭시 이외에도 다양한 열전도성 접착제를 통해 상기 히트싱크(20) 상에 탑재될 수 있다.

<59> 한편, 상기 히트싱크(20) 상에 탑재되는 발광 다이오드 다이(40)는 복수개일 수 있다. 또한, 상기 복수개의 발광 다이오드 다이들(40)은 서로 다른 파장의 광을 방출하는 발광 다이오드 다이들일 수 있다. 예컨대, 도 7에 도시된 바와 같이, 세 개의 발광 다이오드 다이(40)들이 탑재될 수 있다. 이때, 상기 발광 다이오드 다이

(40)들은 각각 레드색, 그린색, 블루색의 광을 방출하는 발광 다이오드 다이들일 수 있다. 이에 따라, 상기 발광 다이오드 다이들(40)을 사용하여 모든 색상의 광을 방출하는 발광 다이오드 패키지를 제공할 수 있다.

<60> 도 2 및 도 8a을 참조하면, 발광 다이오드 다이들(41, 43, 45)과 리드단자들(17a, 17b, 17c, 19a, 19b, 19c)을 본딩와이어들로 전기적으로 연결한다(S13). 상기 발광 다이오드 다이들(41, 43, 45)이 모두 2본드 다이인 경우, 각 발광 다이오드 다이는 두개의 본딩와이들을 통해 두개의 리드단자들에 연결된다. 한편, 도시된 바와 같이, 발광 다이오드 다이들(41, 43, 45)은 각각 서로 다른 한쌍의 리드단자들에 전기적으로 연결될 수 있다. 또한, 하나의 공통 리드단자(예컨대, 17b)와 발광 다이오드 다이들을 각각 본딩와이어들로 연결하고, 상기 공통 리드단자에 대향하여 위치하는 서로 다른 리드단자들(예컨대, 19a, 19b, 19c)과 상기 발광 다이오드 다이들을 다른 본딩와이어들로 연결할 수 있다. 이 경우, 상기 발광 다이오드 다이들은 각각 다른 전류에 의해 구동될 수 있다.

<61> 한편, 도 8b에 도시된 바와 같이, 1본드 다이(41a)와 2본드 다이(43, 45)가 함께 탑재될 수 있다. 이때, 리드단자들 중 하나(17b)는 본딩와이어를 통해 히트싱크(20)에 전기적으로 연결된다. 따라서, 상기 리드단자(17b)는 본딩와이어 및 히트싱크(20)를 통해 상기 1본드 다이(41a)의 하면에 전기적으로 연결된다. 1본드 다이 및 2본드 다이의 조합은 다양하며, 각 조합에 대해 본딩와이어를 연결하는 방식도 다양하게 채택될 수 있다.

<62> 또한, 리드단자들과 발광 다이오드 다이들을 연결하는 방식도 다양하게 선택

될 수 있으며, 복수개의 발광 다이오드 다이들을 직렬, 병렬 또는 직병렬로 연결할 수 있다.

<63> 한편, 본딩와이어들로 발광 다이오드 다이들(41, 43, 45)과 상기 리드단자들을 연결한 후, 봉지재(도시하지 않음)를 사용하여 상기 발광 다이오드 다이들(41, 43, 45)을 밀봉한다(S15). 상기 봉지재는 상기 패키지 본체(30)의 개구부를 채워 상기 발광 다이오드 다이들 및 본딩와이어들을 밀봉할 수 있다.

<64> 또한, 상기 봉지재는 형광체를 함유할 수 있다. 예컨대, 상기 형광체는 블루색의 광을 황색으로 변환하거나, 또는 그린색 및 레드색으로 변환하는 형광체일 수 있다. 따라서, 상기 히트싱크(20) 상에 블루색을 방출하는 발광 다이오드 다이를 탑재할 경우, 상기 발광 다이오드 다이에서 방출된 광의 일부가 황색, 또는 그린색 및 레드색으로 변환되어 백색광이 외부로 방출되는 발광 다이오드 패키지를 제공할 수 있다. 이에 더하여, 상기 봉지재는 확산제를 더 함유할 수 있다. 상기 확산제는 발광 다이오드 다이들에서 방출된 광을 분산시키어 상기 발광 다이오드 다이들 및 본딩와이어들이 외부에서 관찰되는 것을 방지하며, 광이 균일하게 외부로 방출되도록 한다.

<65> 상기 봉지재로 상기 발광 다이오드 다이들을 밀봉한 후, 상기 패키지 본체(30) 상부에 렌즈(도시하지 않음)를 부착한다(S17). 상기 렌즈는 광을 일정한 지향각 내로 방출하기 위해 사용되는 것으로, 렌즈를 사용할 필요가 없는 경우 생략될 수 있다. 특히, 상기 봉지재가 렌즈 형상으로 경화되어 렌즈역할을 할 수 있으며, 이때 렌즈를 부착하는 공정은 생략된다.

<66> 도 2 및 도 9를 참조하면, 리드단자들(17a, 17b, 17c, 19a, 19b, 19c)을 외부프레임(11)으로부터 절단하고 절곡시킨다(S19). 그 결과, 표면실장이 가능한 발광 다이오드 패키지가 완성된다. 한편, 연결단자를 절단하여 제거하는 단계(S09)는 단계(S19)에서 함께 수행될 수도 있다.

<67> 이하, 본 발명의 일 태양에 따른 발광 다이오드 패키지를 도 9를 참조하여 상세히 설명한다.

<68> 다시, 도9를 참조하면, 상기 발광 다이오드 패키지는 히트싱크 지지링(13)을 포함한다. 상기 지지링(13)은 인청동과 같은 구리합금으로 제조된다. 상기 지지링(13), 도시된 바와 같이, 원형 고리모양일 수 있으나, 이에 한정되는 것은 아니며, 다각형 고리모양일 수 있다. 상기 지지링(13)의 외측에 절단된 연결단자들(16a, 16b)이 연장되어 위치한다. 상기 절단된 연결단자들(16a, 16b)은 상기 지지링(13)의 대향하는 양측에 위치할 수 있다.

<69> 상기 지지링(13)에 도 3을 참조하여 설명한 바와 같은 히트싱크(20)가 삽입되어 위치한다.

<70> 한편, 적어도 두개의 리드단자들(17a, 17b, 17c, 19a, 19b, 19c)이 상기 지지링(13) 및 히트싱크(20)와 이격되어 상기 지지링의 양측에 배치된다. 상기 리드단자들은 표면실장이 가능하도록 절곡될 수 있다.

<71> 이에 더하여, 패키지 본체(30)가 상기 히트싱크(20) 및 상기 리드단자들을 몰딩하여 지지한다. 상기 패키지 본체(30)는 상부에 히트싱크(20)의 상단부 및 상기 리드단자들의 일부분들을 노출시키는 개구부를 갖는다. 한편, 상기 리드단자들

의 일부는 상기 패키지 본체(30)의 측벽을 관통하여 외부로 돌출된다.

<72> 도 5a를 참조하여 설명한 바와 같이, 상기 개구부에 의해 상기 지지링(13) 및 연결단자들(15a, 15b)의 일부도 노출될 수 있다. 이에 따라, 상기 패키지 본체(30)의 상부에 홈이 형성된다. 또한, 도 5b를 참조하여 설명한 바와 같이, 상기 패키지 본체(도 5b의 30a)는 상기 히트싱크(20)의 상단부를 제외한 대부분을 덮고, 상기 리드단자들의 일부들만을 노출시킬 수 있다. 따라서, 상기 개구부는 복수개로 형성될 수 있다. 이 경우에도, 상기 패키지 본체(30a)는, 도 5b에 도시된 바와 같이, 상기 패키지 본체의 측벽으로 둘러싸이는 홈을 갖는 것이 바람직하다.

<73> 상기 패키지 본체(30)는 상기 히트싱크(20)를 상기 지지링(13)에 삽입하여 고정시킨 후, 열경화성 수지를 사출성형하여 형성된 플라스틱 수지이다.

<74> 한편, 상기 히트싱크(20)의 상부면에 발광 다이오드 다이들(41, 43, 45)이 탑재되어 위치한다. 도 9에 도시된 발광 다이오드 다이들은 2본드 다이들을 나타내지만, 이에 한정되는 것은 아니며, 상기 발광 다이오드 다이들은 1본드 다이들일 수 있으며, 1본드 다이와 2본드 다이의 조합일 수 있다.

<75> 상기 발광 다이오드 다이들은 본딩와이어들을 통해 상기 리드단자들에 전기적으로 연결된다. 상기 발광 다이오드 다이들이 2본드 다이들인 경우, 각 발광 다이오드 다이들은 두개의 본딩와이어들을 통해 두개의 리드단자들에 전기적으로 연결된다. 한편, 상기 발광 다이오드 다이들 중 적어도 하나가 1본드 다이인 경우, 상기 히트싱크는 본딩와이어를 통해 적어도 하나의 리드단자와 전기적으로 연결된다.

<66> 도 2 및 도 9를 참조하면, 리드단자들(17a, 17b, 17c, 19a, 19b, 19c)을 외부프레임(11)으로부터 절단하고 절곡시킨다(S19). 그 결과, 표면실장이 가능한 발광 다이오드 패키지가 완성된다. 한편, 연결단자를 절단하여 제거하는 단계(S09)는 단계(S19)에서 함께 수행될 수도 있다.

<67> 이하, 본 발명의 일 태양에 따른 발광 다이오드 패키지를 도 9를 참조하여 상세히 설명한다.

<68> 다시, 도9를 참조하면, 상기 발광 다이오드 패키지는 히트싱크 지지링(13)을 포함한다. 상기 지지링(13)은 인청동과 같은 구리합금으로 제조된다. 상기 지지링(13), 도시된 바와 같이, 원형 고리모양일 수 있으나, 이에 한정되는 것은 아니며, 다각형 고리모양일 수 있다. 상기 지지링(13)의 외측에 절단된 연결단자들(16a, 16b)이 연장되어 위치한다. 상기 절단된 연결단자들(16a, 16b)은 상기 지지링(13)의 대향하는 양측에 위치할 수 있다.

<69> 상기 지지링(13)에 도 3을 참조하여 설명한 바와 같은 히트싱크(20)가 삽입되어 위치한다.

<70> 한편, 적어도 두개의 리드단자들(17a, 17b, 17c, 19a, 19b, 19c)이 상기 지지링(13) 및 히트싱크(20)와 이격되어 상기 지지링의 양측에 배치된다. 상기 리드단자들은 표면실장이 가능하도록 절곡될 수 있다.

<71> 이에 더하여, 패키지 본체(30)가 상기 히트싱크(20) 및 상기 리드단자들을 몰딩하여 지지한다. 상기 패키지 본체(30)는 상부에 히트싱크(20)의 상단부 및 상기 리드단자들의 일부분들을 노출시키는 개구부를 갖는다. 한편, 상기 리드단자들

의 일부는 상기 패키지 본체(30)의 측벽을 관통하여 외부로 돌출된다.

<72> 도 5a를 참조하여 설명한 바와 같이, 상기 개구부에 의해 상기 지지링(13) 및 연결단자들(15a, 15b)의 일부도 노출될 수 있다. 이에 따라, 상기 패키지 본체(30)의 상부에 홈이 형성된다. 또한, 도 5b를 참조하여 설명한 바와 같이, 상기 패키지 본체(도 5b의 30a)는 상기 히트싱크(20)의 상단부를 제외한 대부분을 덮고, 상기 리드단자들의 일부들만을 노출시킬 수 있다. 따라서, 상기 개구부는 복수개로 형성될 수 있다. 이 경우에도, 상기 패키지 본체(30a)는, 도 5b에 도시된 바와 같이, 상기 패키지 본체의 측벽으로 둘러싸이는 홈을 갖는 것이 바람직하다.

<73> 상기 패키지 본체(30)는 상기 히트싱크(20)를 상기 지지링(13)에 삽입하여 고정시킨 후, 열경화성 수지를 사출성형하여 형성된 플라스틱 수지이다.

<74> 한편, 상기 히트싱크(20)의 상부면에 발광 다이오드 다이들(41, 43, 45)이 탑재되어 위치한다. 도 9에 도시된 발광 다이오드 다이들은 2본드 다이들을 나타내지만, 이에 한정되는 것은 아니며, 상기 발광 다이오드 다이들은 1본드 다이들일 수 있으며, 1본드 다이와 2본드 다이의 조합일 수 있다.

<75> 상기 발광 다이오드 다이들은 본딩와이어들을 통해 상기 리드단자들에 전기적으로 연결된다. 상기 발광 다이오드 다이들이 2본드 다이들인 경우, 각 발광 다이오드 다이들은 두개의 본딩와이어들을 통해 두개의 리드단자들에 전기적으로 연결된다. 한편, 상기 발광 다이오드 다이들 중 적어도 하나가 1본드 다이인 경우, 상기 히트싱크는 본딩와이어를 통해 적어도 하나의 리드단자와 전기적으로 연결된다.

<76> 상기 발광 다이오드 다이들과 리드단자들을 연결하는 방식은 다양하며, 요구되는 발광 다이오드 패키지의 특성에 맞추어 선택될 수 있다.

<77> 한편, 봉지재(도시하지 않음)가 상기 발광 다이오드 다이들을 덮어 밀봉한다. 상기 봉지재는 상기 패키지 본체(30)의 상부에 형성된 홈들을 채운다. 또한, 상기 봉지재는 형광체 및/또는 확산제를 함유할 수 있다. 한편, 상기 봉지재는 렌즈형상을 가질 수 있다.

<78> 또한, 상기 패키지 본체(30)에 렌즈(도시하지 않음)가 부착될 수 있다.

【발명의 효과】

<79> 본 발명의 실시예들에 따르면, 히트싱크를 채택함으로써 우수한 방열특성을 가지어 높은 광출력을 얻을 수 있는 발광 다이오드 패키지를 제공할 수 있다. 또한, 히트싱크를 리드프레임에 고정시킨 후, 삽입몰딩기술을 사용하여 패키지 본체를 형성할 수 있어, 리드단자와 히트싱크가 상호 결합된 구조로 발광 다이오드 패키지를 쉽게 제조할 수 있다. 또한, 패키지 본체를 형성하기 전 상기 히트싱크를 고정시킬 수 있어, 발광 다이오드 패키지 제조를 용이하게 하는 리드프레임을 제공할 수 있다.

【특허청구범위】

【청구항 1】

히트싱크를 지지하기 위한 지지링;

상기 지지링과 이격되어 상기 지지링을 둘러싸는 외부프레임;

상기 지지링의 대향하는 양측면에서 상기 지지링과 상기 외부프레임을 연결하는 적어도 두개의 연결단자들;

상기 외부프레임에서 상기 지지링을 향해 연장되되, 상기 지지링과 이격된 적어도 두개의 리드단자들을 포함하는 히트싱크 지지링을 갖는 리드프레임.

【청구항 2】

청구항 1에 있어서, 상기 적어도 두개의 리드단자들은 상기 지지링의 대향하는 양측에 각각 하나 이상 배치된 것을 특징으로 하는 히트싱크 지지링을 갖는 리드프레임.

【청구항 3】

청구항 2에 있어서, 상기 리드단자들은 상기 연결단자들과 직교하는 방향에 배치된 것을 특징으로 하는 히트싱크 지지링을 갖는 리드프레임.

【청구항 4】

히트싱크 지지링;

상기 지지링에 삽입된 히트싱크;

상기 지지링 및 히트싱크와 이격되어 상기 지지링의 양측에 배치된 적어도

두개의 리드단자들;

상기 히트싱크 및 상기 리드단자들을 몰딩하여 지지하되, 상기 히트싱크의 상단부 및 상기 리드단자들의 일부분들을 노출시키는 개구부를 갖는 패키지 본체를 포함하는 발광 다이오드 패키지.

【청구항 5】

청구항 4에 있어서, 상기 히트싱크는 기저부 및 상기 기저부의 중앙부분에서 상향 돌출된 돌출부를 포함하고, 상기 돌출부가 상기 지지링에 삽인된 것을 특징으로 하는 발광 다이오드 패키지.

【청구항 6】

청구항 5에 있어서, 상기 히트싱크는 상기 돌출부의 측면에 상기 지지링에 체결되기 위한 지지링 수용홈을 더 포함하는 발광 다이오드 패키지.

【청구항 7】

청구항 4에 있어서, 상기 패키지 본체는 상기 히트싱크를 상기 지지링에 삽입한 후, 열경화성 수지를 사출성형하여 형성된 플라스틱 수지인 것을 특징으로 하는 발광 다이오드 패키지.

【청구항 8】

청구항 4에 있어서, 상기 히트싱크 상부면에 탑재된 적어도 하나의 발광 다이오드 다이; 및 상기 발광 다이오드 다이와 상기 리드단자들을 전기적으로 연결하는 본딩와이오들을 포함하는 발광 다이오드 패키지.

【청구항 9】

청구항 1 내지 3 중 어느 하나의 리드프레임을 준비하고,

상기 지지링에 삽입되어 고정될 수 있는 히트싱크를 준비하고,

상기 지지링에 상기 히트싱크를 삽입하여 고정시키고,

삽입몰딩 기술을 사용하여 상기 히트싱크 및 상기 히트싱크 주변의 상기 리드단자들 및 연결단자들 일부분들을 몰딩하여 지지하는 패키지 본체를 형성하되, 상기 패키지 본체는 상기 히트싱크의 상단부 및 상기 리드단자들의 일부들을 노출시키는 개구부를 갖는 발광 다이오드 패키지 제조방법.

【청구항 10】

청구항 9에 있어서, 상기 패키지 본체 외부의 연결단자들을 절단하여 제거하는 것을 더 포함하는 발광 다이오드 패키지 제조방법.

【청구항 11】

청구항 9에 있어서, 상기 히트싱크의 상부면에 적어도 하나의 발광 다이오드 다이를 탑재하고, 상기 각각의 발광 다이오드 다이를 상기 리드단자들 중 두개의 리드단자들에 전기적으로 연결시키는 본딩와이어들을 형성하는 것을 더 포함하는 발광 다이오드 패키지 제조방법.

【도면】

【도 1】

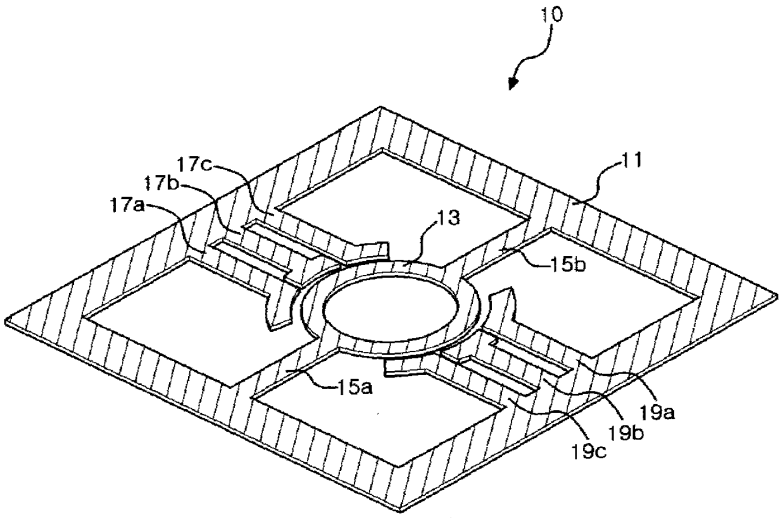

【도 2】

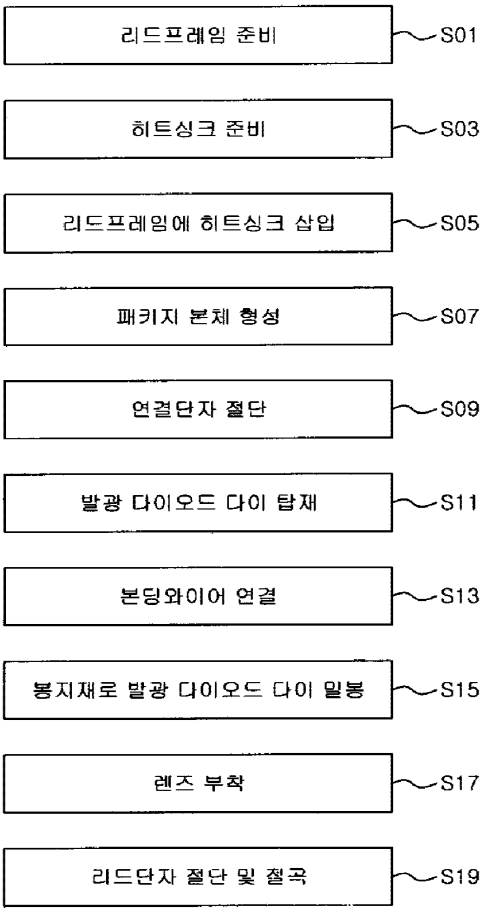
리드프레임 준비
S01
히트싱크 준비
S03
리드프레임에 히트싱크 삽입
S05
패키지 본체 형성
S07
연결단자 절단
S09
발광 다이오드 다이 탑재
S11
본딩와이어 연결
S13
봉지재로 발광 다이오드 다이 밀봉
S15
렌즈 부착
S17
리드단자 절단 및 절곡
S19

【도 3】

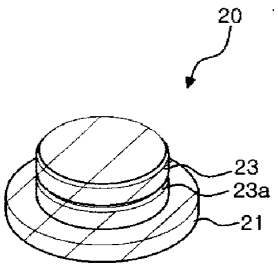
20
23
23a
21

【도 4】

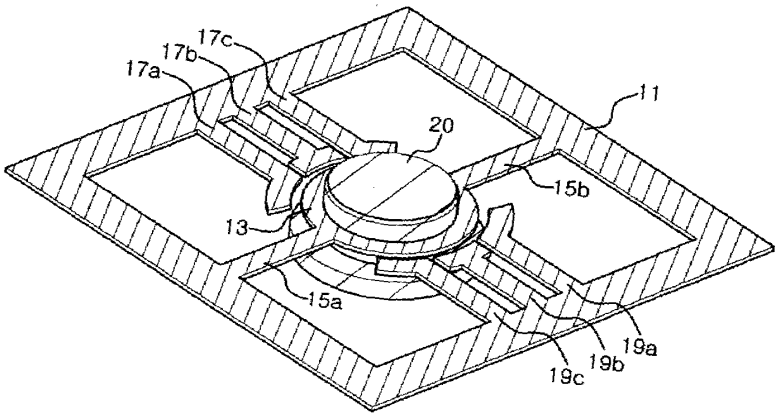
17c
17b
17a
11
20
15b
13
15a
19a
19b
19c

【도 5a】

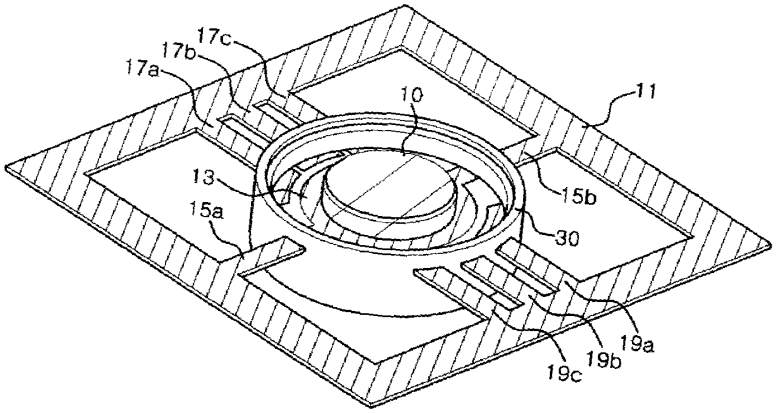
17c
17b
17a
10
11
13
15b
15a
30
19a
19b
19c

【도 5b】

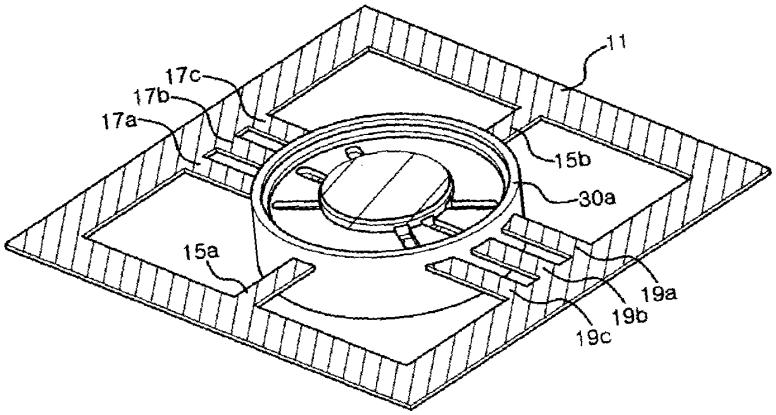
11
17c
17b
17a
15b
30a
15a
19a
19b
19c

【도 6a】

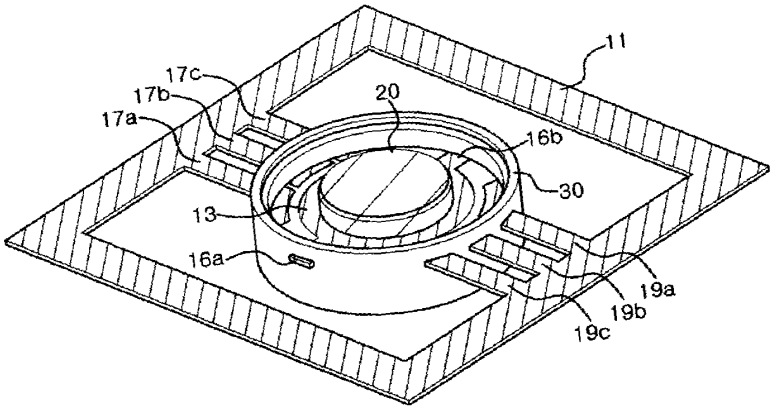
11
17c
17b
17a
20
16b
30
13
16a
19a
19b
19c

【도 6b】

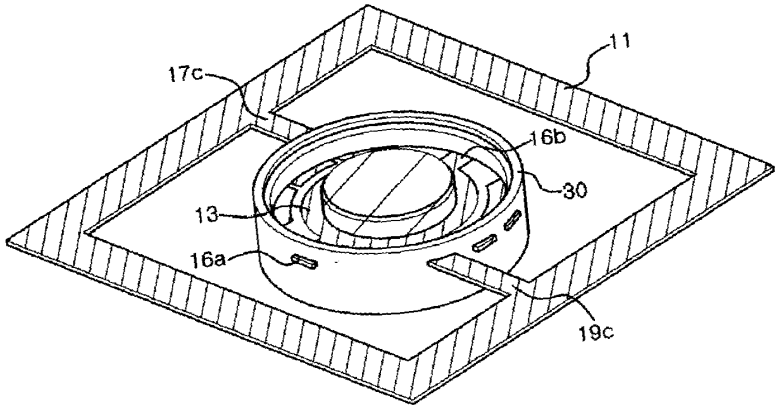

【도 6c】

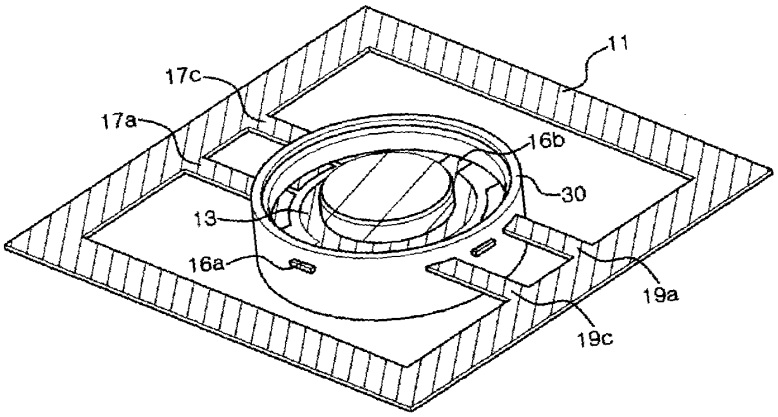

【도 7】

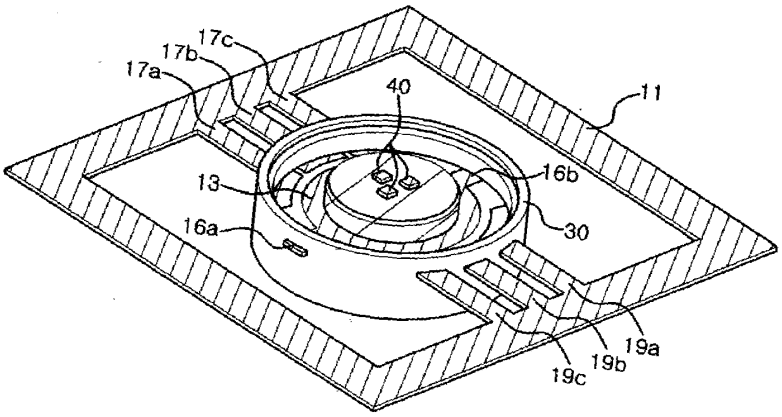
17c
17b
17a
40
11
13
16b
16a
30
19a
19b
19c

【도 8a】

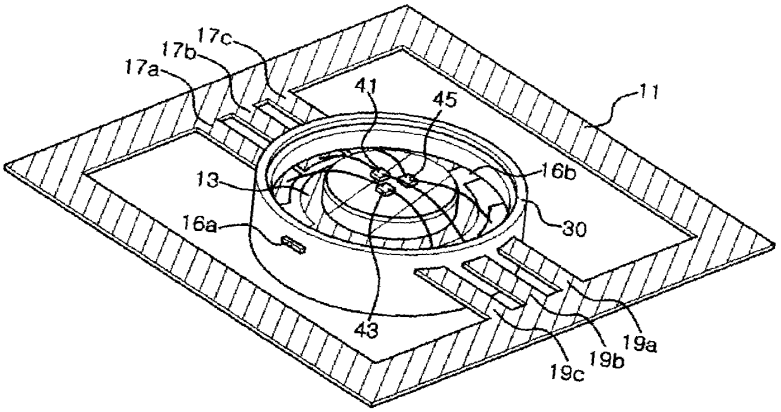
17c
17b
17a
41
45
11
13
16b
16a
30
43
19a
19b
19c

【도 8b】

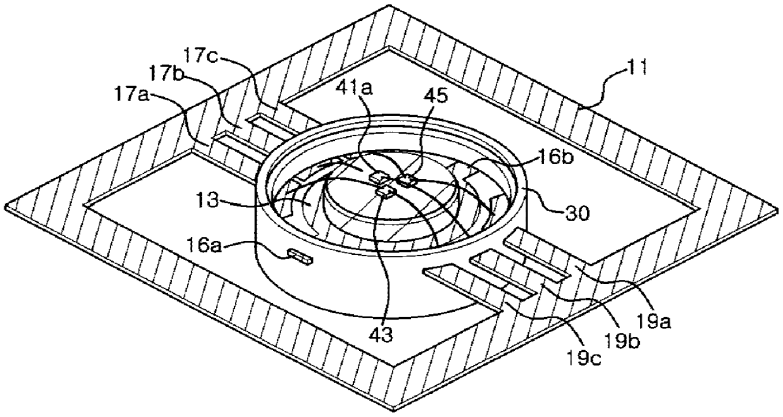
17c
17b
17a
41a
45
11
16b
13
30
16a
43
19a
19b
19c

【도 9】

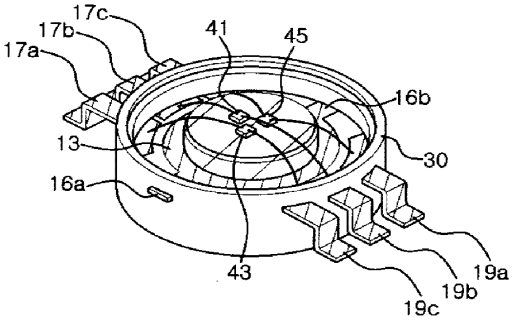
17c
17b
17a
41
45
16b
13
30
16a
43
19a
19b
19c

Document made available under the Patent Cooperation Treaty (PCT)

International application number: PCT/KR2005/003346

International filing date: 07 October 2005 (07.10.2005)

Document type: Certified copy of priority document

Document details: Country/Office: KR
Number: 10-2005-0056436
Filing date: 28 June 2005 (28.06.2005)

Date of receipt at the International Bureau: 08 December 2005 (08.12.2005)

Remark: Priority document submitted or transmitted to the International Bureau in compliance with Rule 17.1(a) or (b)

World Intellectual Property Organization (WIPO) - Geneva, Switzerland
Organisation Mondiale de la Propriété Intellectuelle (OMPI) - Genève, Suisse

대 한 민 국 특 허 청
KOREAN INTELLECTUAL PROPERTY OFFICE

별첨 사본은 아래 출원의 원본과 동일함을 증명함.

This is to certify that the following application annexed hereto is a true copy from the records of the Korean Intellectual Property Office

출 원 번 호 : Application Number	특허출원 2005년 제 0056436 호 10-2005-0056436
출 원 일 자 : Date of Application	2005년 06월 28일 JUN 28, 2005
출 원 인 : Applicant(s)	서울반도체 주식회사 SEOUL SEMICONDUCTOR CO.,LTD

2005 년 11 월 23 일

특 허 청 장
COMMISSIONER

【서지사항】

【서류명】	특허출원서
【권리구분】	특허
【수신처】	특허청장
【제출일자】	2005.06.28
【발명의 국문명칭】	측면 발광용 렌즈 및 발광 소자
【발명의 영문명칭】	Side illumination Lens and Luminescent device using the same
【출원인】	
【명칭】	서울반도체 주식회사
【출원인코드】	1-1998-099837-1
【대리인】	
【성명】	남승희
【대리인코드】	9-2003-000036-2
【포괄위임등록번호】	2003-055258-8
【발명자】	
【성명】	박광일
【성명의 영문표기】	PARK,Kwang Il
【주민등록번호】	770721-1090118
【우편번호】	151-069
【주소】	서울특별시 관악구 봉천본동 909-19 선우빌리지 2동 302호
【국적】	KR
【심사청구】	청구
【취지】	특허법 제42조의 규정에 의한 출원, 특허법 제60조의 규정에 의한 출원심사를 청구합니다. 대리인 남승희 (인)
【수수료】	

【기본출원료】	0	면	38,000	원
【가산출원료】	19	면	0	원
【우선권주장료】	0	건	0	원
【심사청구료】	8	항	365,000	원
【합계】	403,000 원			
【감면사유】	중소기업			
【감면후 수수료】	201,500 원			

【첨부서류】 1.중소기업기본법시행령 제2조에의한 중소기업에 해당함을 증명하는 서류[사업자등록증 및 중소기업기준검토표]_1통

【요약서】

【요약】

본 발명은 광학렌즈 및 이를 이용한 발광 소자에 관한 것으로, 대략 반 타원 곡면의 몸체를 갖고, 상기 몸체의 중앙부에 각기 다른 기울기를 갖는 전반사면 및 상기 몸체의 가장자리부에 굴절면을 포함하는 렌즈 그리고, 기판과, 상기 기판 상에 전기적으로 실장된 발광 칩 및 상기 발광 칩을 봉지하며 중앙에 각기 다른 기울기를 갖는 전반사면과 가장자리부에 라운딩 형상의 굴절면을 갖는 렌즈를 포함하는 발광 소자를 제공한다. 이와 같이 각기 다른 경사각을 갖는 내부 전반사면이 형성된 렌즈를 통해 발광 칩의 전면으로 발광 된 빛을 측면으로 유도할 수 있다. 또한, 전반사면을 통해 반사된 빛은 렌즈 가장자리의 라운드된 굴절면을 통해 다시 한번 굴절되어 측면으로 방출되는 빛의 강도를 향상시킬 수 있다.

【대표도】

도 3a

【색인어】

내부 전반사, 렌즈, 기울기, 굴절면, 발광 칩

【명세서】

【발명의 명칭】

측면 발광용 렌즈 및 발광 소자{Side illumination Lens and Luminescent device using the same}

【도면의 간단한 설명】

<1> 도 1a 및 도 1b는 종래의 발광 소자의 단면도.

<2> 도 2는 임계각을 설명하기 위한 개념도.

<3> 도 3a는 본 발명에 따른 발광 소자의 단면도.

<4> 도 3b는 본 발명에 따른 발광 소자의 평면도.

<5> 도 4는 본 발명에 따른 내부 전반사 렌즈의 동작을 설명하기 위한 개념도.

<6> 도 5는 본 발명에 따른 발광 소자의 시뮬레이션 결과를 나타낸 그래프.

<7> 도 6a 및 도 6b는 실험 측정 결과를 나타낸 그래프.

<8> <도면의 주요 부분에 대한 부호의 설명>

<9> 10, 100 : 기판 11, 110 : 발광 칩

<10> 12, 120 : 렌즈 14 : 반사판

<11> 121, 122 : 전반사면 123 : 굴절면

【발명의 상세한 설명】

【발명의 목적】

【발명이 속하는 기술분야 및 그 분야의 종래기술】

<12> 본 발명은 측면 발광용 렌즈 및 이를 구비하는 발광 소자에 관한 것으로, 더욱 상세하게는 내부 전반사를 이용한 측면 발광용 렌즈 및 이를 구비하는 발광 소자에 관한 것이다.

<13> 일반적으로 발광 소자(Light emitting diode; LCD)는 반도체의 p-n 접합구조를 이용하여 주입된 소수캐리어(전자 또는 양공)를 만들어내고, 이들의 재결합에 의하여 발광되는 현상을 이용한 소자이다. 종래에는 발광 소자가 발광할 수 있는 빛의 색이 빨강색과 녹색뿐이었고, 따라서 종래의 발광 소자는 표시 소자에 한정되어 사용되었다.

<14> 하지만, 기술을 발달로 인해 청색 발광은 물론, 다양한 파장대의 발광이 가능하게 됨에 따라 다양한 분야에서 발광 소자가 사용되기 시작하였다. 특히 백색 발광이 실현됨에 따라 조명용 소자는 물론 액정을 이용한 표시 소자의 백라이트로도 그 사용이 확대되고 있다.

<15> 그러나 발광 소자가 방출하는 빛의 방향이 일정하지 않고, 매우 랜덤하기 때문에 조명용 소자 및 백라이트 소자로서 사용하기 위해서는 빛을 목표로 하는 방향으로 유도하여야 한다. 종래에는 이러한 빛의 유도를 위해 도 1a에 도시된 바와 같이 기판(10)상에 발광 칩(11)을 실장하고, 발광 칩(11) 상부에 볼록 렌즈(12)로 몰딩하고, 그 표면에 난반사를 위한 패턴(13)을 형성하여 빛의 피짐을 넓게

하였고, 도 1b에 도시된 바와 같이 발광 칩(11)의 양측영역에 반사컵(14)을 형성하여 빛의 집중을 강화하였다. 상술한 발광 소자는 측면 방향보다 전면 방향으로의 빛 방출이 많기 때문에, 측면 방향으로 넓게 빛을 발산하여야 하는 백라이트 소자에 적용하기 어려운 문제가 있다.

<16> 따라서, 현재 빛의 내부 전반사(Total Internal Reflection; TIR) 특징을 이용하여 렌즈의 측면 방향으로 빛을 방출할 수 있는 소자의 개발이 활발히 진행되고 있다. 이러한, TIR을 갖는 종래의 렌즈는 미국 공개 특허 제6,679,621호에 개시되어 있다. 상기에서의 렌즈는 그 상부에 형성되고 소정의 기울기를 갖는 전반사면과, 전반사면에 의해 반사된 광이 외부로 방출되는 각기 다른 기울기를 갖는 다수의 굴절면을 포함한다. 이러한 종래의 렌즈는 전반사면의 좌우로 다수의 굴절면을 형성하기 때문에 렌즈의 제조 공정이 복잡해지고, 그 제작 단가가 상승되는 문제가 있다. 즉, 금형을 이용하여 렌즈를 제작할 경우에는 상하 좌우로 4벌의 금형을 수행하여야 하고, 캐스팅이나 연마 방법으로 제작할 경우에도 형태상의 제작이 용이하지 않는 문제가 있다.

【발명이 이루고자 하는 기술적 과제】

<17> 따라서, 본 발명은 상기의 문제점을 해결하기 위하여 각기 다른 임계각을 갖는 내부 전반사면과 전반사면에서 연장되어 그 외측에 타원형의 굴절면을 갖는 렌즈를 통해 측면 발광이 가능하고, 그 제작 공정이 용이하고, 제작 비용을 감소시킬 수 있는 렌즈 및 발광 소자를 제공하는 것을 그 목적으로 한다.

【발명의 구성】

<18> 본 발명에 따른 몸체와, 상기 몸체의 중앙부에 각기 다른 기울기를 갖는 전반사면 및 상기 몸체의 가장자리부에 굴절면을 포함하는 렌즈를 제공한다.

<19> 여기서, 상기 굴절면은 타원형이고, 타원의 단축과 당축의 비가 1:2 내지 1:4이다.

<20> 상기의 전반사면은 상기 발광 칩에서 상기 전반사면으로 입사되는 빛과 상기 전반사면과 수직한 법선이 이루는 각이 30 내지 60도가 되도록 기울어진다.

<21> 이때, 상기 전반사면은, 소정의 기울기를 갖는 브이(V)자 형 홈 형상의 제 1 전반사면 및 상기 제 1 전반사면과 상기 굴절면 사이에서 상기 제 1 전반사면의 기울기보다 완만한 기울기를 갖는 제 2 전반사면을 포함한다. 상기 몸체의 굴절율이 1.2 내지 2.0이다.

<22> 또한, 본 발명에 따른 기판과, 상기 기판 상에 전기적으로 실장된 발광 칩 및 상기 발광 칩을 봉지하며 중앙에 각기 다른 기울기를 갖는 전반사면과 가장자리부에 굴절면을 갖는 렌즈를 포함하는 발광 소자를 제공한다.

<23> 여기서, 상기 굴절면은 타원형이고, 타원의 단축과 장축의 비가 1:2 내지 1:4이다.

<24> 상기 렌즈의 굴절율이 1.2 내지 2.0인 물질을 사용한다.

<25> 이하, 첨부된 도면을 참조하여 본 발명의 실시예를 더욱 상세히 설명하기로 한다. 그러나 본 발명은 이하에서 개시되는 실시예에 한정되는 것이 아니라 서로 다른 다양한 형태로 구현될 것이며, 단지 본 실시예들은 본 발명의 개시가 완전하도록 하며, 통상의 지식을 가진 자에게 발명의 범주를 완전하게 알려주기 위해 제공되는 것이다. 도면상에서 동일 부호는 동일한 요소를 지칭한다.

<26> 도 2는 임계각을 설명하기 위한 개념도이다.

<27> 도 2를 참조하면, 임계각이란 굴절률이 큰 물질(n1)에서 작은 물질(n2)로 빛이 입사할 때, 그 이상의 더 큰 각도에서는 전반사가 일어나게 되는 입사각(Θc)의 값을 지칭한다. 즉, 도 2의 (a)에 도시된 바와 같이 빛이 다른 매질(n2<n1)을 만나 굴절할 경우, 굴절각이 90도가 되는 입사각을 임계각이라고 지칭하고, 이때 입사각은 법선을 기준으로 측정한 각도(Θc1)를 지칭한다. 입사각이 임계각보다 크면 전반사를 하게 된다.

<28> 이에 본 발명은 도 2의 (b)에 도시된 바와 같이 굴절률이 다른 두 매질(n2<n1)에 있어서, 일 매질(n1)에서 타 매질(n2)로 빛이 수직하게 입사될 경우, 일 매질(n1)의 경계면이 소정의 기울기를 갖게 된다면, 입사되는 빛과 경계면에 수직한 법선이 이루는 각이 임계각(Θc2>Θc1)보다 크게 된다. 이로인해 빛은 일 매질(n1)을 투과하여 타 매질(n2)로 진행하지 못하고, 일 매질(n1) 내부로 반사하게 된다. 이러한 빛의 전반사 현상을 이용하면 투명한 면임에도 빛이 투과되지 못하고 반사하게 된다. 여기서, 일 매질로는 렌즈와 같이 투광성이 우수한 물질을 사용하

고, 타 매질은 공기가 될 수 있다.

<29> 도 3a는 본 발명에 따른 발광 소자의 단면도이고, 도 3b는 평면도이다. 도 4는 본 발명에 따른 내부 전반사 렌즈의 동작을 설명하기 위한 개념도이다. 도 5는 본 발명에 따른 발광 소자의 시뮬레이션 결과를 나타낸 그래프이고, 도 6a 및 도 6b는 실험 측정결과를 나타낸 그래프이다.

<30> 도 3a, 도 3b 및 도 4를 참조하면, 본 발명에 따른 발광 소자는 기판(100)과, 기판(100)상에 실장된 발광 칩(110)과, 발광 칩(110)을 봉지하며, 중앙에 소정의 기울기를 갖는 브이(V)자 형상의 제 1 전반사면(121)과 제 1 전반사면(121)의 기울기보다 완만한 기울기를 갖는 제 2 전반사면(122)이 형성되고, 제 2 전반사면(122)에서 연장되어 하향 라운딩된 굴절면(123)을 갖는 렌즈(120)를 포함한다. 여기서 하향 라운딩된 굴절면은 타원형의 단일 굴절면을 사용한다.

<31> 먼저, 상술한 본 실시예의 렌즈에 관해 먼저 살펴보면 다음과 같다.

<32> 제 1 전반사면(121)은 발광 칩(110) 상부에 브이(V)자 형 홈으로 형성되고, 굴절면(123)은 가장자리에서 라운드 되도록 형성되며, 제 2 전반사면(122)은 홈과 가장자리 사이에서 외측을 향해 상향 구배를 갖도록 경사지게 형성된다. 또한, 도 3a에 도시된 바와 같이 전체 렌즈(120)의 높이(T)를 1로 하였을 경우, 제 1 전반사면(121)의 높이(T2)는 1/2 내지 1/4이고, 제 2 전반사면(122)의 높이(T1)는 1/2 내지 1/4이다. 도면에서와 같이 굴절면의 높이는 전체 렌즈의 높이와 동일하다. 또한, 도 3b에 도시된 바와 같이 전체 렌즈(120)의 지름(A, B, C)을 1로 하였을 경우, 제 1 전반사면(121)의 지름(A)은 1/3 내지 1/8이고, 제 2 전반사면(122)의 지

름(A, B)은 1/2 내지 1/6이다.

<33> 그리고, 굴절면(123)은 타원형으로 형성되고 타원의 단축과 장축의 비가 1:2 내지 1:4 범위내로 이루어진다. 보다 바람직하게는 단축과 장축의 비가 1:3의 비율을 가진다.

<34> 이때, 전반사면(121, 122)의 기울기는 앞서 설명한 바와 같이 전반사면과 발광 칩(110)에서 발광 되어 전반사면에 입사된 빛이 이루는 각이 임계각보다 큰 각이 되도록 한다. 즉, 임계각은 렌즈(120)의 굴절율에 따라 달라지므로 본 실시예에서의 렌즈(120)는 굴절율이 1.2 내지 2.0인 물질을 사용하여, 임계각이 30 내지 60도가 되도록 한다.

<35> 이와 같이 전반사면(121, 122)으로 입사되는 빛과 전반사면이 이루는 각이 임계각 이상이 되도록 하기 위해 본 실시예에서는 제 1 전반사면(121)의 기울기를 30 내지 89도로 하고, 제 2 전반사면(122)의 기울기를 20 내지 60도로 한다. 이때, 상기의 기울기는 제 1 및 제 2 전반사면(121, 122)과 하부 기판(100)과의 이루는 각을 지칭한다. 바람직하게는 제 1 전반사면(121)의 기울기를 40 내지 70도로 하고, 제 2 전반사면(122)의 기울기를 30 내지 50도로 한다.

<36> 이를 통해, 도 4에 도시된 바와 같이 광원(발광칩)으로 부터 x축 방향(수직방향)을 기준으로 ±40 내지 45도 범위내로 조사되는 빛은 제 1 및 제 2 전반사면(121, 122)을 통해 렌즈(120)의 측면(수평방향)으로 전반사되고, 타원형의 단일 굴절면(123)을 통해 x축 방향에 대해 거의 90도의 각도로 광이 출사된다. 한편, x축 방향을 기준으로 ±40 내지 45도 범위 이외로 조사되는 빛은 제 1 및 제 2 전반사

면(121, 122)에 반사되지 않고, 타원형의 굴절면(123)을 통해 굴절되어 x축 방향에 대해 거의 90도의 각도로 광이 출사된다. 본 실시예에서는 약 42도를 기준으로 전반사면(121, 122)을 통해 광 반사되어 렌즈의 측면으로 출사되도록 하거나, 전반사면(121, 122)을 거치지 않고, 광이 출사되도록 한다.

<37> 이와 같이 본 발명의 렌즈(120)는 중앙부에 각기 다른 기울기를 갖는 전반사면을 갖고, 가장자리에 라운딩된 굴절면(123)을 갖도록 형성하여 도 5 및 도 6에 도시된 바와 같이 광도의 피크값이 ±80도에서 ±10도 범위 내에 위치한다. 그리고, 0도에서의 광의 광도는 피크값 대비 0 내지 20%로 그 광도를 최소화한다. 바람직하게는 5 내지 10%로 할 수 있다.

<38> 도 5에서는, 굴절율이 1.5인 렌즈(120)를 사용하였고, 제 1 전반사면(121)과 발광 칩(110)으로부터 방출되는 빛이 이루는 각이 임계각보다 큰 약 50도가 되도록 하고, 제 2 전반사면(122)과 발광 칩(110)으로부터 방출되는 빛이 이루는 각이 약 43도가 되도록한 후, 발광 칩이 위치한 영역을 기준으로 +90도에서 -90도의 범위내에서의 광의 강도를 시뮬레이션하여 그 결과를 표로 나타내었다. 도 5의 표에서와 같이 ±80도 근방에서 그 강도가 가장 높다. 즉, -80도에서 그 강도가 약 0.93 정도이고, +78도에서는 그 강도가 약 0.96 정도이다. 또한, ±40도 내외에서의 빛의 강도가 0.1 이하이다.

<39> 도 6a는 굴절율이 1.5인 렌즈(120)를 사용하였고, 제 1 전반사면(121)과 발광 칩(110)으로부터 방출되는 빛이 이루는 각이 임계각보다 큰 약 50도가 되도록하고, 제 2 전반사면(122)과 발광 칩(110)으로부터 방출되는 빛이 이루는 각이 약 43

도가 되도록한 후, 발광 칩(110)이 위치한 영역을 기준으로 +90도에서 -90도의 범위내에서의 광의 강도를 실험하여 측정한 결과를 나타낸 그래프이고, 도 6b는 그 결과를 극좌표로 표현한 그래프이다. 도 6a 및 도 6b의 표에서와 같이 발광 칩 즉, 발광 소자의 중심을 기준으로 ±75도 근방에서 그 강도가 가장 높다, 즉, -74도에서 그 강도가 약 1이고, +78도에서 그 강도가 약 0.99이다. 또한, ±20도 내외에서의 빛의 강도가 0.1 이하이고, ±40도 내외에서는 빛의 강도가 0.2이하이다.

<40> 이는 제 1 및 제 2 전반사면(121, 122)을 통해 전반사된 빛과 굴절면(123)을 통해 굴정된 빛이 모두 발광 소자의 측면 방향으로 진행하기 때문이다.

<41> 상술한 본 발명의 렌즈(120)는 사출 금형공정을 통해 제작할 수도 있고, 타원곡면을 갖는 렌즈(120)의 상부 면을 연마 공정을 통해 연마하여 제작할 수도 있다. 이와 같은 제작 방법을 통해 본 발명이 렌즈를 제작할 경우, 굴절면이 타원형인 단일 굴절면으로 이루어져 있기 때문에 제작이 용이해지며, 이에 따라 불량률이 감소되고 제작비용을 감소시킬 수 있다. 이뿐만 아니라, 앞서 설명한 종래의 기술에서는 다수의 굴절면이 일정한 거리에 따르는 기울기를 가지므로 그 사이즈가 커지게 되지만, 이에 반하여 본 발명은 단일의 굴절면을 갖고 그 형상이 타원형으로 형성되기 때문에 측면 발광의 효과는 늘리면서 그 사이즈는 작게 제작할 수 있다.

<42> 상기의 발광 칩(110)으로는 PN접합을 통해 빛을 발광하는 모든 형태의 발광 칩을 사용한다. 상기의 발광 칩(110)은 다수개가 기판상에 실장될 수도 있다.

<43> 상기의 발광 칩(110)이 실장되는 기판(100)은 전극이 패터닝된 PCB기판을 사용한다. 히트 싱크가 삽입된 기판을 사용할 수도 있고, 기판으로 PCB 기판, 리드

프레임 열전도성 수지를 사용할 수 있으나 이에 한정되지 않는다. 상기의 발광 칩(110) 상에는 소정의 형광체가 포팅될 수도 있고, 렌즈(120) 내부에 형광체가 혼합되어 있을 수도 있다.

<44> 본 발명에서는 발광 칩이 렌즈에 의해 밀봉되는 가장 바람직한 실시예를 설명하였지만 발광 칩과 렌즈의 사이에 일정 공간(미도시)이 형성될 수도 있으며, 이때 상기의 공간 내에서 채워지는 물질은 굴절율이 1.2 내지 2.0인 물질에서 선택될 수 있으며, 예를 들어 에폭시/실리콘수지, 공기/다른가스(예를 들면 질소)로 채워지거나 진공일 수 있으며 여기에 형광체를 더 포함할 수 있다.

【발명의 효과】

<45> 상술한 바와 같이 본 발명은 각기 다른 경사각을 갖는 내부 전반사면과 타원형의 굴절면을 갖는 렌즈를 통해 발광 칩의 전면으로 발광 된 빛을 측면으로 유도할 수 있다.

<46> 또한, 렌즈 가장자리에 단일의 타원형의 굴절면만이 형성되어 있어 렌즈의 제조공정이 용이해지고, 이로인해 렌즈 제작시 불량율을 줄일 수 있고, 렌즈의 제작 단가를 줄일 수 있다.

<47> 본 발명을 첨부 도면과 전술된 바람직한 실시예를 참조하여 설명하였으나, 본 발명은 그에 한정되지 않으며, 후술되는 특허청구범위에 의해 한정된다. 따라서, 본 기술분야의 통상의 지식을 가진 자라면 후술되는 특허청구범위의 기술적 사상에서 벗어나지 않는 범위 내에서 본 발명을 다양하게 변형 및 수정할 수 있

다.

【특허청구범위】

【청구항 1】

몸체;

상기 몸체의 중앙부에 각기 다른 기울기를 갖는 전반사면; 및

상기 몸체의 가장자리부에 굴절면을 포함하는 렌즈.

【청구항 2】

청구항 1에 있어서,

상기 굴절면은 타원형이고, 타원의 단축과 장축의 비가 1:2 내지 1:4인 렌즈.

【청구항 3】

청구항 1에 있어서,

상기 전반사면은 상기 발광 칩에서 상기 전반사면으로 입사되는 빛과 상기 전반사면과 수직한 법선이 이루는 각이 30 내지 60도가 되도록 기울어진 발광 소자.

【청구항 4】

청구항 1 내지 청구항 3 중 어느 한 항에 있어서, 상기 전반사면은,

소정의 기울기를 갖는 브이(V)자 형 홈 형상의 제 1 전반사면; 및

상기 제 1 전반사면과 상기 굴절면 사이에서 상기 제 1 전반사면의 기울기보다 완만한 기울기를 갖는 제 2 전반사면;을 포함하는 렌즈.

【청구항 5】

청구항 1에 있어서,

상기 몸체의 굴절율이 1.2 내지 2.0인 렌즈.

【청구항 6】

기판;

상기 기판 상에 전기적으로 실장된 발광 칩; 및

상기 발광 칩을 봉지하며 중앙에 각기 다른 기울기를 갖는 전반사면과 가장자리부에 굴절면을 갖는 렌즈;를 포함하는 발광 소자.

【청구항 7】

청구항 6에 있어서,

상기 굴절면은 타원형이고, 타원의 단축과 장축의 비가 1:2 내지 1:4인 발광 소자.

【청구항 8】

청구항 6에 있어서,

상기 렌즈의 굴절율이 1.2 내지 2.0인 물질을 사용하는 발광 소자.

【도면】

【도 1a】

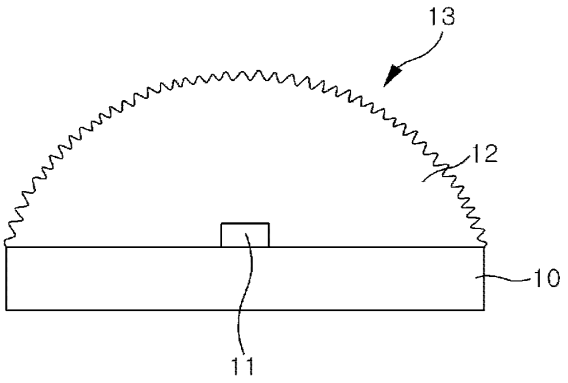

【도 1b】

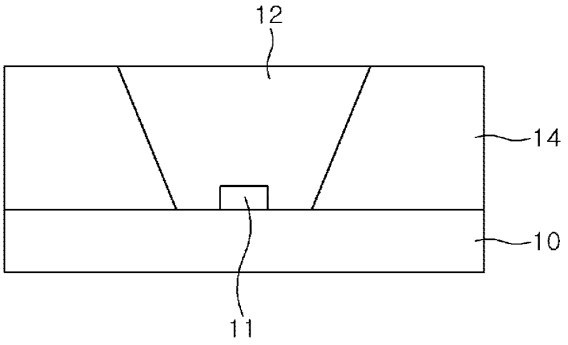

【도 2】

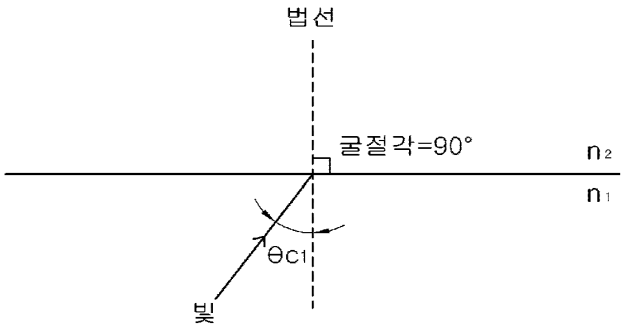

(a)

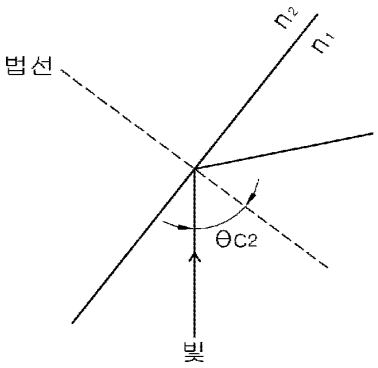

(b)

【도 3a】

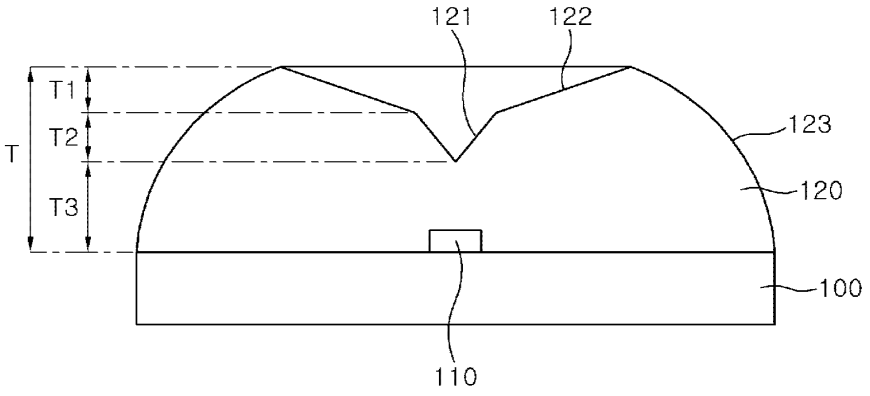

【도 3b】

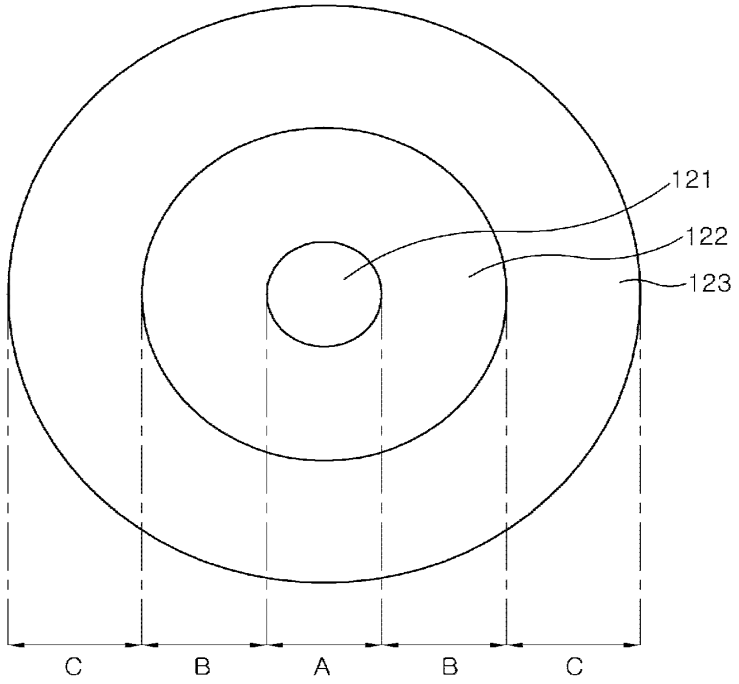

【도 4】

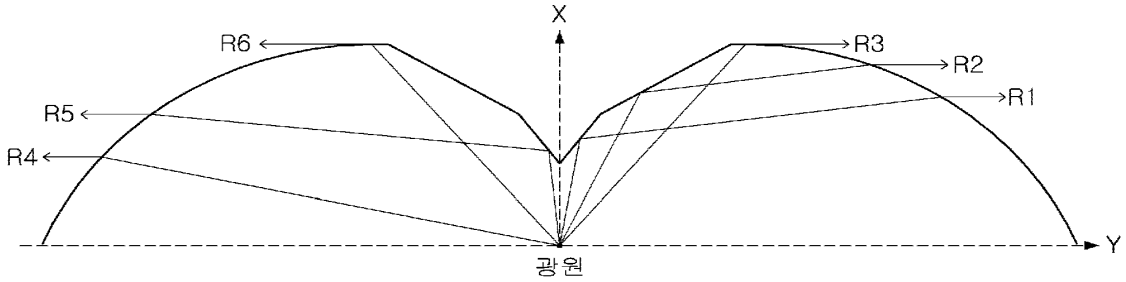
X
R6
R3
R2
R1
R5
R4
Y
광원

【도 5】

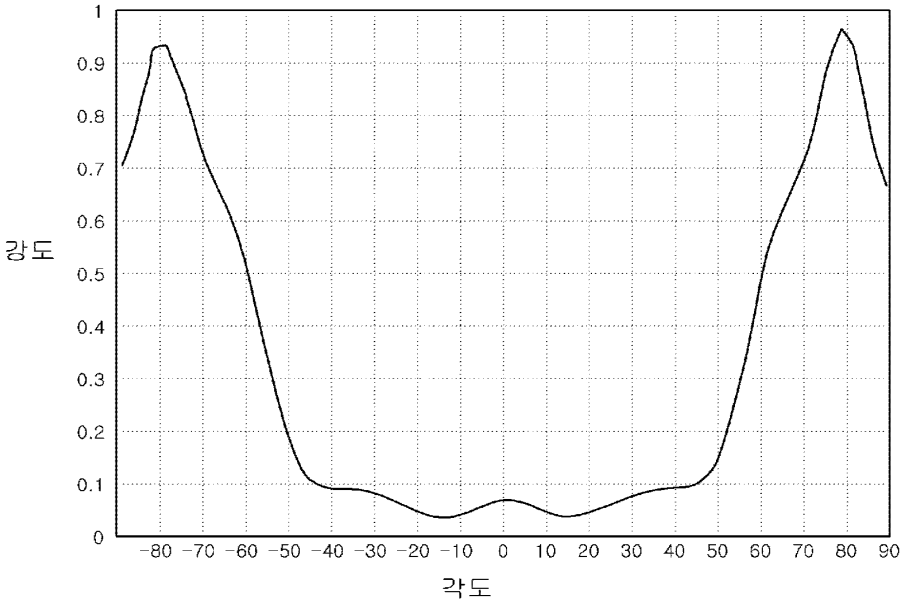
1
0.9
0.8
0.7
0.6
0.5
0.4
0.3
0.2
0.1
0
강도
-80 -70 -60 -50 -40 -30 -20 -10 0 10 20 30 40 50 60 70 80 90
각도

【도 6a】

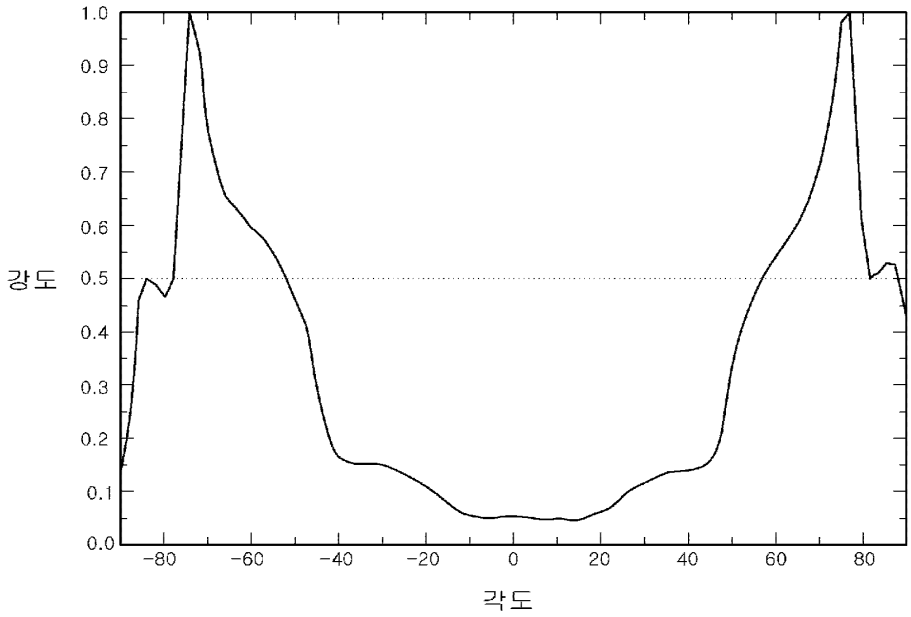
1.0
0.9
0.8
0.7
0.6
0.5
0.4
0.3
0.2
0.1
0.0
강도
-80
-60
-40
-20
0
20
40
60
80
각도

【도 6b】

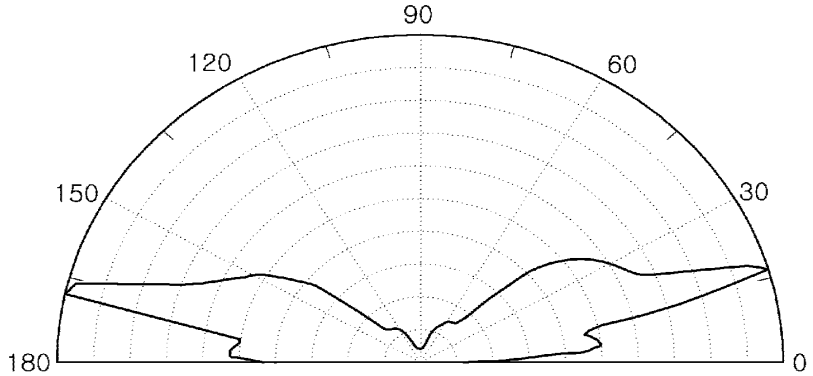
90
120
60
150
30
180
0

Document made available under the Patent Cooperation Treaty (PCT)

International application number: PCT/KR2005/003346

International filing date: 07 October 2005 (07.10.2005)

Document type: Certified copy of priority document

Document details: Country/Office: KR
Number: 10-2005-0083743
Filing date: 08 September 2005 (08.09.2005)

Date of receipt at the International Bureau: 08 December 2005 (08.12.2005)

Remark: Priority document submitted or transmitted to the International Bureau in compliance with Rule 17.1(a) or (b)

World Intellectual Property Organization (WIPO) - Geneva, Switzerland
Organisation Mondiale de la Propriété Intellectuelle (OMPI) - Genève, Suisse

대 한 민 국 특 허 청
KOREAN INTELLECTUAL PROPERTY OFFICE

별첨 사본은 아래 출원의 원본과 동일함을 증명함.

This is to certify that the following application annexed hereto is a true copy from the records of the Korean Intellectual Property Office

출 원 번 호 : Application Number	특허출원 2005년 제 0083743 호 10-2005-0083743
출 원 일 자 : Date of Application	2005년 09월 08일 SEP 08, 2005
출 원 인 : Applicant(s)	서울반도체 주식회사 SEOUL SEMICONDUCTOR CO.,LTD

2005 년 11 월 23 일

특 허 청 장
COMMISSIONER

【서지사항】

【서류명】	특허출원서
【권리구분】	특허
【수신처】	특허청장
【참조번호】	0471
【제출일자】	2005.09.08
【발명의 국문명칭】	측면 발광용 렌즈 및 발광 소자
【발명의 영문명칭】	Side illumination Lens and Luminescent device using the same
【출원인】	
【명칭】	서울반도체 주식회사
【출원인코드】	1-1998-099837-1
【대리인】	
【성명】	남승희
【대리인코드】	9-2003-000036-2
【포괄위임등록번호】	2003-055258-8
【발명자】	
【성명】	박광일
【성명의 영문표기】	PARK,Kwang Il
【주민등록번호】	770721-1090118
【우편번호】	151-069
【주소】	서울특별시 관악구 봉천본동 909-19 선우빌리지 2동 302호
【국적】	KR
【심사청구】	청구
【취지】	특허법 제42조의 규정에 의한 출원, 특허법 제60조의 규정에 의한 출원심사를 청구합니다. 대리인 남승희 (인)

【수수료】

【기본출원료】	0	면	38,000	원
【가산출원료】	34	면	0	원
【우선권주장료】	0	건	0	원
【심사청구료】	11	항	461,000	원
【합계】	499,000 원			
【감면사유】	중소기업			
【감면후 수수료】	249,500 원			

【첨부서류】 1.중소기업기본법시행령 제2조에의한 중소기업에 해당함을 증명하는 서류[사업자등록증 및 중소기업기준검토표]_1통

【요약서】

【요약】

본 발명은 광학 렌즈 및 이를 이용한 발광 소자에 관한 것으로서, 몸체와, 상기 몸체의 중심축에 대해 전반사 기울기를 갖는 전반사면과, 상기 몸체의 중심축과 수직 또는 수평한 축방향으로 연장된는 직선형 면과 하향 연장되는 곡선형 면을 포함하는 렌즈와 이를 이용한 발광 다이오드를 제공한다. 이와 같이 본 발명은 내부 전반사면과, 내부 전반사면의 중심축과 수직 또는 수평한 축 방향으로 형성되는 직선형의 면 및 곡선형의 면을 갖는 렌즈를 통해 발광 칩의 전면으로 방사되는 광을 측면으로 유도할 수 있다. 또한, 렌즈 가장자리에 중심축에 대하여 수직 또는 수평한 축방향으로 형성되는 직선형의 면과 곡선형의 면을 형성함으로 렌즈의 제조 공정이 쉬워지고, 이로 인해 렌즈 제작시 불량율을 줄일 수 있고, 렌즈의 제작 단가를 줄일 수 있다.

【대표도】

도 3a

【색인어】

내부 전반사, 렌즈, 기울기, 굴절면, 발광 칩

【명세서】

【발명의 명칭】

측면 발광용 렌즈 및 발광 소자{Side illumination Lens and Luminescent device using the same}

【도면의 간단한 설명】

<1> 도 1a 및 도 1b는 종래의 발광 소자의 단면도.

<2> 도 2는 임계각을 설명하기 위한 개념도.

<3> 도 3a는 본 발명의 제 1 실시예에 따른 발광 소자의 단면도.

<4> 도 3b는 제 1 실시예에 따른 렌즈의 사시도.

<5> 도 4는 제 1 실시예에 따른 내부 전반사 렌즈의 동작을 설명하기 위한 개념도.

<6> 도 5는 제 1 실시예에 따른 발광 소자의 시뮬레이션 결과그래프이다.

<7> 도 6a는 본 발명의 제 2 실시예에 따른 발광 소자의 단면도.

<8> 도 6b는 제 2 실시예에 따른 렌즈의 사시도.

<9> 도 7은 제 2 실시예에 따른 내부 전반사 렌즈의 동작을 설명하기 위한 개념도.

<10> 도 8은 제 2 실시예에 따른 발광 소자의 시뮬레이션 결과그래프.

<11> 도 9a는 본 발명의 제 3 실시예에 따른 발광 소자의 단면도.

<12> 도 9b는 제 3 실시예에 따른 렌즈의 사시도.

<13> 도 10은 제 3 실시예에 따른 내부 전반사 렌즈의 동작을 설명하기 위한 개념도.

<14> 도 11은 제 3 실시예에 따른 발광 소자의 시뮬레이션 결과그래프.

<15> 도 12a는 본 발명의 제 4 실시예에 따른 발광 소자의 단면도.

<16> 도 12b는 제 4 실시예에 따른 렌즈의 사시도.

<17> 도 13은 제 4 실시예에 따른 내부 전반사 렌즈의 동작을 설명하기 위한 개념도.

<18> 도 14는 제 4 실시예에 따른 발광 소자의 시뮬레이션 결과그래프.

<19> <도면의 주요 부분에 대한 부호의 설명>

<20> 10, 100 : 기판 11, 110 : 발광 칩

<21> 12, 120 : 렌즈 14 : 반사판

<22> 121 : 전반사면 122 : 측면

【발명의 상세한 설명】

【발명의 목적】

【발명이 속하는 기술분야 및 그 분야의 종래기술】

<23> 본 발명은 측면 발광용 렌즈 및 이를 구비하는 발광 소자에 관한 것으로, 더욱 상세하게는 내부 전반사를 이용한 측면 발광용 렌즈 및 이를 구비하는 발광 소

자에 관한 것이다.

<24> 일반적으로 발광 소자(Light emitting diode; LED)는 반도체의 p-n 접합구조를 이용하여 주입된 소수캐리어(전자 또는 양공)를 만들어내고, 이들의 재결합에 의하여 발광되는 현상을 이용한 소자이다. 종래에는 발광 소자가 발광할 수 있는 파장대가 적색과 녹색으로 한정되어 그 응용 분야가 제한적이었으나, 기술의 발달로 인해 청색 발광은 물론, 다양한 파장대의 발광이 가능하게 되어 발광 소자의 응용분야가 넓어지게 되었다. 특히 백색 발광이 실현됨에 따라 조명용 소자는 물론 액정을 이용한 표시 소자의 배면 광원 소자로도 그 사용이 확대되고 있다.

<25> 그러나 발광 소자가 방출하는 광의 방향이 랜덤하기 때문에 조명용 소자 및 배면 광원 소자로서 사용되기 위해서는 광을 목표로 하는 방향으로 유도하여야 한다. 종래에는 이러한 광의 유도를 위해 도 1a에 도시된 바와 같이 기판(10)상에 발광 칩(11)을 실장하고, 발광 칩(11)을 볼록 렌즈(12) 형상으로 봉지하고, 그 표면에 난반사를 위한 패턴(13)을 형성하여 광을 넓게 분산시켰고, 도 1b에 도시된 바와 같이 발광 칩(11)의 양측 영역에 반사컵(14)을 형성하여 광의 집중을 강화하였다. 상술한 발광 소자는 측면 방향보다 전면 방향으로의 광 방출이 많기 때문에, 측면 방향으로 넓게 광을 발산하여야 하는 배면 광원 소자로 적용하기 어려운 문제가 있다.

<26> 이에 따라, 광의 내부 전반사(Total Internal Reflection; TIR) 특징을 이용하여 측면 방향으로 광을 방출할 수 있는 소자의 개발이 활발히 진행되고 있다. 이러한, TIR 특징을 가지는 종래의 렌즈는 미국 공개 특허 제6,679,621호에 개시되어

있다. 상기에서의 렌즈는 그 상부에 형성되고 소정의 기울기를 갖는 전반사면과, 전반사면에 의해 반사된 광이 외부로 방출되는 각기 다른 기울기를 갖는 다수의 굴절면을 포함한다. 이러한 종래의 렌즈는 전반사면의 좌우로 다수의 굴절면을 형성하기 때문에 렌즈의 제조 공정이 복잡해지고, 그 제작 단가가 상승되는 문제가 있다. 즉, 금형을 이용하여 렌즈를 제작할 경우에는 상하 좌우로 4벌의 금형이 요구되고, 캐스팅이나 연마 방법으로 제작할 경우에도 형태상의 복잡성으로 인해 제작이 용이하지 않은 문제가 있다.

【발명이 이루고자 하는 기술적 과제】

<27> 따라서, 본 발명은 상기의 문제점을 해결하기 위하여 전반사 기울기를 갖는 내부 전반사면과 이로부터 연장되는 적어도 하나 이상의 직선형 면 및 곡선형 면을 갖는 렌즈를 통해 측면 발광이 가능하고, 그 제작 공정이 용이하고, 제작 비용을 감소시킬 수 있는 렌즈 및 발광 소자를 제공하는 것을 그 목적으로 한다.

【발명의 구성】

<28> 본 발명에 따른 몸체와, 상기 몸체의 중심축에 대해 전반사 기울기를 갖고 중심부에 위치된 전반사면과, 상기 전반사면의 주연부에서 절곡되어 형성되는 직선형 면 및 상기 직선형 면의 주연부에서 연장 형성되는 곡선형 면을 포함하는 렌즈를 제공한다.

<29> 또한, 본 발명에 따른 몸체와, 상기 몸체의 중심축에 대해 전반사 기울기를

갖고 중심부에 위치된 전반사면과, 상기 전반사면의 주연부에서 연장 형성되는 곡선형 면 및 상기 곡선형 면의 주연부에서 절곡되어 형성되는 직선형 면을 포함하는 렌즈를 포함한다.

<30> 상기 곡선형 면은 타원형으로, 타원의 단축과 장축의 비가 1:4 이하이다. 상기 직선형 면은 1회 이상 절곡된다. 상기 몸체의 굴절율은 1.2 내지 2.0이다.

<31> 여기서, 상기 전반사면은, 소정의 기울기를 갖는 단면이 브이(V)자 형 홈 형상의 제 1 전반사면 및 상기 제 1 전반사면의 주연부에서 상향 연장되어 상기 중심축에 대해 상기 제 1 전반사면보다 큰 구배를 갖도록 경사지게 형성된 제 2 전반사면을 포함한다.

<32> 또한, 본 발명에 따른 기판과, 상기 기판 상에 실장된 발광 칩 및 상기 발광 칩을 봉지하며 중심에 전반사 기울기를 갖는 전반사면과, 상기 전반사면의 주연부에서 절곡되어 형성되는 직선형 면과, 상기 직선형 면의 주연부에서 연장 형성되는 곡선형 면을 포함하는 렌즈를 포함하는 발광 소자를 제공한다.

<33> 또한, 본 발명에 따른 기판과, 상기 기판 상에 실장된 발광 칩 및 상기 발광 칩을 봉지하며 중심에 전반사 기울기를 갖는 전반사면과, 상기 전반사면의 주연부에서 연장 형성되는 곡선형 면과 상기 곡선형 면의 주연부에서 절곡되어 형성되는 직선형 면을 포함하는 렌즈를 포함하는 발광 소자를 제공한다.

<34> 상기 곡선형 면은 타원형으로, 타원의 단축과 장축의 비가 1:4 이하인 렌즈를 포함한다. 상기 직선형 면은 1회 이상 절곡되는 것을 특징으로 하는 렌즈를 포함한다.

<35> 여기서, 몸체의 굴절율이 1.2 내지 2.0인 렌즈를 포함한다.

<36> 이하, 첨부된 도면을 참조하여 본 발명의 실시예를 더욱 상세히 설명하기로 한다. 그러나 본 발명은 이하에서 개시되는 실시예에 한정되는 것이 아니라 서로 다른 다양한 형태로 구현될 것이며, 단지 본 실시예들은 본 발명의 개시가 완전하도록 하며, 통상의 지식을 가진 자에게 발명의 범주를 완전하게 알려주기 위해 제공되는 것이다. 도면상에서 동일 부호는 동일한 요소를 지칭한다.

<37> 도 2는 임계각을 설명하기 위한 개념도이다.

<38> 도 2를 참조하면, 임계각이란 굴절률이 큰 물질(n1)에서 작은 물질(n2)로 광이 입사할 때, 그 이상의 더 큰 각도에서는 전반사가 일어나게 되는 입사각(Θc)의 값을 지칭한다. 즉, 도 2의 (a)에 도시된 바와 같이 광이 다른 매질(n2<n1)을 만나 굴절할 경우, 굴절각이 90도가 되는 입사각을 임계각이라고 지칭하고, 이때 입사각은 법선을 기준으로 측정한 각도(Θc1)를 지칭한다. 입사각이 임계각보다 크면 전반사를 하게 된다.

<39> 이에 본 발명은 도 2의 (b)에 도시된 바와 같이 굴절률이 다른 두 매질(n2<n1)에 있어서, 일 매질(n1)에서 타 매질(n2)로 광이 수직하게 입사될 경우, 일 매질(n1)의 경계면이 소정의 기울기를 갖게 된다면, 입사되는 광과 경계면에 수직한 법선이 이루는 각이 임계각(Θc2>Θc1)보다 크게 된다. 이로인해 광은 일 매질(n1)을 투과하여 타 매질(n2)로 진행하지 못하고, 일 매질(n1) 내부로 반사하게 된다. 이러한 광의 전반사 현상을 이용하면 광이 투과되지 못하고 반사하게 된다.

여기서, 일 매질로는 렌즈와 같이 투광성이 우수한 물질을 사용하고, 타 매질은 예를 들어 공기가 될 수 있다.

<40> 이러한 광학적 성질을 이용하여 발광 칩에서 출사되는 광 중, 칩의 중심 즉, 렌즈의 중심으로 출사되는 광은 전반사 현상에 의해 측면으로 유도되고, 칩의 측방으로 출사되는 광은 직선형의 면과 곡선형의 면을 통해 굴절되어 측면으로 유도할 수 있는 다수의 굴절면을 갖는 렌즈와 발광 소자에 관해 하기에서 설명한다.

<41> <실시예 1>

<42> 도 3a는 본 발명의 제 1 실시예에 따른 발광 소자의 단면도이고, 도 3b는 제 1 실시예에 따른 렌즈의 사시도이다. 도 4는 제 1 실시예에 따른 내부 전반사 렌즈의 동작을 설명하기 위한 개념도이고, 도 5는 제 1 실시예에 따른 발광 소자의 시뮬레이션 결과 그래프이다.

<43> 도 3a, 도 3b 및 도 4를 참조하면, 본 실시예에 따른 발광 소자는 기판(100)과, 기판(100)상에 실장된 발광 칩(110)과, 발광 칩(110)을 봉지하며, 중심축(x) 방향에 대해 기울기를 갖는 단면이 브이(V)자 형상인 제 1 전반사면(121a)과, 상기 제 1 전반사면(121a)의 기울기보다 완만한 기울기를 갖는 제 2 전반사면(121b)과, 상기 중심축(x)과 수직한 방향으로 상기 제 2 전반사면의 주연부에서 연장된 직선형 제 1 면(122a)과, 상기 직선형 제 1 면(122a)의 주연부에서 하향 연장된 곡선형 제 2 면(122b)을 갖는 렌즈를 포함한다.

<44> 먼저, 상술한 본 실시예의 렌즈에 관해 먼저 살펴보면 다음과 같다.

<45> 도 3a에 도시된 바와 같이 제 1 전반사면(121a)은 발광 칩(110) 상부에 브이

(V)자 형 홈으로 형성되고, 제 2 전반사면(121b)은 홈에서 상향 연장되어 중심축(x)에 대해 제 1 전반사보다 큰 구배를 갖도록 경사지게 형성된다. 한편, 직선형 제 1 면(122a)은 발광 칩(110)이 실장되는 기판(100)과 수평한 직선형으로 형성되고, 곡선형 제 2 면(122b)은 제 1 면(122a)에서 연장되어 하향 라운딩된 곡선형으로 형성한다. 물론 제 1 면(122a)은 렌즈(120)의 하부면과 수평하게 형성될 수 있다. 상기 제 1 및 제 2 면(122a, 122b)은 렌즈의 가장자리로 유도된 광을 렌즈의 측면으로 굴절시키는 면을 지칭한다.

<46> 상기에서 전체 렌즈(120)의 직경을 1로 하였을 경우, 제 1 전반사면(121a)은 상기 렌즈(120)의 중심 형성되고, 제 1 전반사면(121a)의 최대 직경은 1/12 내지 1/6이고, 제 2 전반사면(121b)은 상기 제 1 전반사면(121a)을 감싸는 형상으로 형성되고, 그 최대 직경은 1/7 내지 1/3이며, 제 1 면(122a)은 제 2 전반사면(121b)을 감싸는 원형 띠 형태로 형성되고, 그 최대 직경은 1/5 내지 2/3이며, 제 2 면(122b)은 전체 렌즈(120)의 직경과 동일하다. 여기서, 원형 띠 형태의 제 1 면(122a)의 폭은 렌즈 직경의 1/16 내지 1/8이다. 또한, 렌즈(120)의 높이를 1로 하였을 경우 제 1 전반사면(121a)의 높이는 1/6 내지 1/2이고, 제 2 전반사면(121b)의 높이는 1/6 내지 1/2이다.

<47> 제 2 면(122b)은 도 3a에서와 같이 타원형으로 형성되고, 타원의 단축과 장축의 비가 1:4 이하의 범위 내로 이루어진다. 즉, 이는 원형일 수도 있다.

<48> 이때, 전반사면(121a, 121b)의 기울기는 앞서 설명한 바와 같이 전반사면과 발광 칩(110)에서 발광되어 전반사면에 입사된 광이 이루는 각이 임계각보다 큰 각

이 되도록 한다. 즉, 임계각은 렌즈(120)의 굴절율에 따라 달라지므로 본 실시예에서의 렌즈(120)는 굴절율이 1.2 내지 2.0인 물질을 사용하여, 임계각이 30 내지 60도가 되도록 한다.

<49> 이와 같이 전반사면(121a, 121b)으로 입사되는 광과 전반사면이 이루는 각이 임계각 이상이 되도록 하기 위해 본 실시예에서는 제 1 전반사면(121a)의 기울기를 30 내지 89도로 하고, 제 2 전반사면(121b)의 기울기를 20 내지 60도로 한다. 이때, 상기의 기울기는 제 1 및 제 2 전반사면(121a, 121b)과 하부 기판(100)과의 이루는 각을 지칭한다. 바람직하게는 제 1 전반사면(121a)의 기울기를 40 내지 70도로 하고, 제 2 전반사면(121b)의 기울기를 30 내지 50도로 한다. 또한, 제 1 면(122a)은 기울기가 10도 이하로 형성하는 것이 바람직하고, 앞서 설명에선 그 기울기가 0인 평행한 상태를 설명하였다.

<50> 이를 통해, 도 4에 도시된 바와 같이 광원(발광칩)으로부터 제 1 및 제 2 전반사면(121a, 121b)으로 조사된 광(R2, R3)은 전반사되어, 라운딩된 제 2 면(122b)을 통해 y축 방향으로 광이 출사된다. 제 1 및 제 2 면(122a, 122b)으로 조사된 광(R4, R1)은 굴절되어 y축방향으로 광이 출사된다.

<51> 이와 같이 본 발명의 렌즈(120)는 중심부에 각기 다른 기울기를 갖는 전반사면을 갖고, 가장자리에 수평형 면과 라운딩된 면을 갖도록 형성하여 도 5에 도시된 바와 같이 광도의 피크값이 ±83도에서 ±10도 범위 내에 위치한다.

<52> 도 5에서는, 굴절율이 1.5인 렌즈(120)를 사용하였고, 제 1 전반사면(121a)과 발광 칩(110)으로부터 방출되는 광이 이루는 각이 임계각보다 큰 약 50도가 되

도록하고, 제 2 전반사면(121b)과 발광 칩(110)으로부터 방출되는 광이 이루는 각이 약 43도가 되도록 한 후, 발광 칩(110)이 위치한 영역을 기준으로 +90도에서 -90도의 범위 내에서의 광의 강도를 시뮬레이션하여 그 결과를 그래프로 나타내었다. 도 5의 그래프에서와 같이 ±83도 근방에서 그 강도가 가장 높다. 즉, +83도에서 그 강도가 약 0.97 정도이고, -83도에서는 그 강도가 약 0.94 정도이다. 또한, ±40도 내에서의 광의 강도가 0.2 이하이다.

<53> 이는 제 1 및 제 2 전반사면(121a, 121b)을 통해 전반사된 광과 제 1 및 제 2 면(122a, 122b)을 통해 굴절된 광이 발광 소자의 측면 방향으로 진행하기 때문이다.

<54> 상술한 본 발명의 렌즈(120)는 사출 금형공정을 통해 제작할 수도 있고, 타원곡면을 갖는 렌즈(120)의 상부 면을 연마 공정을 통해 연마하여 제작할 수도 있다. 이와 같은 제작 방법을 통해 본 발명의 렌즈를 제작할 경우, 수평한 직선형 면과 타원형의 곡선형 면으로 이루어지기 때문에 제작이 쉬워지며, 이에 따라 불량률이 감소되고 제작비용을 감소시킬 수 있다. 이뿐만 아니라, 앞서 설명한 종래의 기술에서는 다수의 굴절면이 일정한 거리에 따르는 기울기를 가지므로 그 사이즈가 커지게 되지만, 이에 반하여 본 발명은 이중의 굴절면을 갖고 그 형상이 수평형 및 타원형으로 형성되기 때문에 측면 발광의 효과는 늘리면서 그 사이즈는 작게 제작할 수 있다. 또한, 종래의 기술에서는 굴절면이 중심축 방향으로 파고 들어가는 형상이지만 본 발명의 렌즈의 굴절면은 전반사면의 주연부에서 외측으로 연장 형성된 형상이다.

<55> 상기의 발광 칩(110)으로는 PN접합을 통해 발광하는 모든 형태의 발광 칩을 사용할 수 있음을 물론 다수 개의 발광 칩이 기판 상에 실장될 수도 있다.

<56> 상기 발광 칩(110)이 실장되는 기판(100)은 전극이 패터닝된 PCB기판 또는 히트 싱크가 삽입된 기판 등을 사용할 수 있으나 이에 한정되지 않으며, 상기의 발광 칩(110) 상부에는 형광체를 포함할 수 있다.

<57> 본 발명에서는 발광 칩이 렌즈에 의해 밀봉되는 가장 바람직한 실시예를 설명하였지만 발광 칩과 렌즈의 사이에 일정 공간(미도시)이 형성될 수도 있으며, 이때 상기의 공간 내에서 채워지는 물질은 굴절율이 1.2 내지 2.0인 물질에서 선택될 수 있으며, 예를 들어 에폭시/실리콘수지, 공기/다른가스(예를 들면 질소)로 채워지거나 진공일 수 있으며 여기에 형광체를 더 포함할 수 있다.

<58> 또한, 상기의 렌즈는 직선형의 면과 이로부터 연장된 곡선형의 면을 포함하지만 이에 한정되지 않고 다양한 형상으로 변형가능하다. 즉, 곡선형의 면으로부터 연장된 다수의 직선형 면일 수 있으며, 이에 더하여, 또한, 직선형 면이 절곡될 수도 있다. 하기에서는 곡선형 면에서 연장되고 1번 절곡된 직선형 면을 갖는 본 발명의 제 2 실시예에 따른 발광용 렌즈와 발광 소자에 관해 설명한다.

<59> <실시예2>

<60> 도 6a는 본 발명의 제 2 실시예에 따른 발광 소자의 단면도이고, 도 6b는 제 2 실시예에 따른 렌즈의 사시도이다. 도 7은 제 2 실시예에 따른 내부 전반사 렌즈의 동작을 설명하기 위한 개념도이고, 도 8은 제 2 실시예에 따른 발광 소자의 시뮬레이션 결과 그래프이다.

<61> 도 6a, 도 6b 및 도 7을 참조하면, 본 실시예에 따른 발광 소자는 기판(100)과, 기판(100)상에 실장된 발광 칩(110)과, 발광 칩(110)을 봉지하며, 중심축(x)에 대해 소정의 기울기를 갖는 단면이 브이(V)자 형상의 제 1 전반사면(121a)과 제 1 전반사면(121a)의 기울기보다 완만한 기울기를 갖는 제 2 전반사면(121b)과, 상기 제 2 전반사면(121b)의 주연부에서 하향 연장된 곡선형의 제 1 면(122a)과, 상기 중심축(x)과 수직 방향으로 상기 제 1 면(122a)의 주연부에서 연장된 직선형의 제 2 면(122b)과, 상기 중심축(x)과 수평 방향으로 제 2 면(122b)의 주연부에서 연장된 직선형의 제 3 면(122c)을 갖는 렌즈(120)를 포함한다.

<62> 먼저, 상술한 본 실시예의 렌즈에 관해 먼저 살펴보면 다음과 같다.

<63> 도 6a 및 도 6b에 도시된 바와 같이 상기에서 전체 렌즈(120)의 직경을 1로 하였을 경우, 제 1 전반사면(121a)은 상기 렌즈(120)의 중심 형성되고, 제 1 전반사면(121a)의 최대 직경은 1/12 내지 1/6이고, 제 2 전반사면(121b)은 상기 제 1 전반사면(121a)을 감싸는 형상으로 형성되고, 그 최대 직경은 1/7 내지 1/3이다. 그리고, 제 1 면(122a)은 제 2 전반사면(121b)을 감싸는 타원 형태로 형성되고, 그 최대 직경은 1/2 내지 7/8이며, 제 2 및 제 3 면(122b, 122c)의 최대 직경은 전체 렌즈(120)의 직경과 동일하다. 여기서, 제 2 면(122b)의 폭은 렌즈 직경의 1/16 내지 1/8이다.

<64> 또한, 렌즈(120)의 높이를 1로 하였을 경우에 제 1 전반사면(121a)의 높이는 1/12 내지 1/6이고, 제 2 전반사면(121b)의 높이는 1/12 내지 1/6이며, 제 1 면(122a)의 높이는 1/4 내지 3/4이며, 제 3 면(122c)의 높이는 1/4 내지 3/4이다.

여기서, 제 1 면(122a)은 도면에서와 같이 타원형으로 형성되고, 타원의 단축과 장축의 비가 1:4 이하의 범위 내로 이루어진다. 즉, 이는 원형일 수도 있다.

<65> 이를 통해, 도 7에 도시된 바와 같이 광원(발광칩)으로부터 제 1 및 제 2 전반사면(121a, 121b)으로 조사된 광(R4, R5)은 전반사되어, 라운딩되어 제 1 면(122a)을 통해 y축 방향으로 광이 출사된다. 제 1, 2 및 3 면(122a, 122b, 122c)으로 조사된 광(R3, R2, R1)은 굴절되어 y축 방향으로 출사된다.

<66> 이와 같이 본 발명의 렌즈(120)는 중앙부에 각기 다른 기울기를 갖는 전반사면을 갖고, 가장자리에 라운딩형, 수평형 및 수직형 면을 갖도록 형성하여 도 8에 도시된 바와 같이 광도의 피크값이 ±64도에서 ±10도 범위 내에 위치한다.

<67> 도 8에서는 굴절율이 1.5인 렌즈(120)를 사용하였고, 제 1 전반사면(121a)과 발광 칩(110)으로부터 방출되는 광이 이루는 각이 임계각보다 큰 약 50도가 되도록 하고, 제 2 전반사면(121b)과 발광 칩(110)으로부터 방출되는 광이 이루는 각이 약 43도가 되도록 한 후, 발광 칩이 위치한 영역을 기준으로 +90도에서 -90도의 범위 내에서의 광의 강도를 시뮬레이션하여 그 결과를 그래프로 나타내었다.

<68> 도 8의 그래프에서와 같이 ±64도 근방에서 그 강도가 가장 높다. 즉, +64도에서 그 강도가 약 0.99 정도이고, -64도에서는 그 강도가 약 0.98 정도이다. 또한, ±40도 내에서의 광의 강도가 0.2 이하이다.

<69> 이는 앞서 설명한 바와 같이 제 1 및 제 2 전반사면(121a, 121b)을 통해 전반사된 광과 제 1 내지 제 3 면(122a, 122b, 122c)을 통해 굴절된 광이 발광 소자의 측면 방향으로 진행하기 때문이다.

<70> 이하 렌즈의 제작 방법과 발광 소자는 앞서 설명한 실시예와 동일함으로 생략한다.

<71> 하기에서는, 2번 절곡된 직선형의 면과 이로부터 연장된 곡선형의 면을 갖는 본 발명의 제 3 실시예에 따른 측면 발광용 렌즈와 발광 소자에 관해 설명한다.

<72> <실시예3>

<73> 도 9a는 본 발명의 제 3 실시예에 따른 발광 소자의 단면도이고, 도 9b는 제 3 실시예에 따른 렌즈의 사시도이다. 도 10은 제 3 실시예에 따른 내부 전반사 렌즈의 동작을 설명하기 위한 개념도이고, 도 11은 제 3 실시예에 따른 발광 소자의 시뮬레이션 결과 그래프이다.

<74> 도 9a, 도 9b 및 도 10을 참조하면, 본 실시예에 따른 발광 소자는 기판(100)과, 기판(100)상에 실장된 발광 칩(110)과, 발광 칩(110)을 봉지하며, 중심축(x)에 대해 소정의 기울기를 갖는 단면이 브이(V)자 형상의 제 1 전반사면(121a)과 제 1 전반사면(121a)의 기울기보다 완만한 기울기를 갖는 제 2 전반사면(121b)과, 상기 중심축(x)과 수직 방향으로 상기 제 2 전반사면(121b)의 주연부에서 연장된 직선형의 제 1 면(122a)과, 상기 중심축(x)과 수평 방향으로 상기 제 1 면(122a)의 주연부에서 하향 연장된 직선형의 제 2 면(122b)과, 상기 중심축(x)과 수직 방향으로 상기 제 2 면(122b)의 주연부에서 연장된 직선형의 제 3 면(122c)과, 상기 제 3 면(122c)의 주연부에서 하향 연장된 곡선형의 제 4 면(122d)을 갖는 렌즈(120)를 포함한다.

<75> 상술한 본 실시예의 렌즈에 관해 먼저 살펴보면 다음과 같다.

<76> 도 9a 및 도 9b에 도시된 바와 같이 상기에서 전체 렌즈(120)의 직경을 1로 하였을 경우, 제 1 전반사면(121a)의 최대 직경은 1/12 내지 1/6이고, 제 2 전반사면(121b)의 최대 직경은 1/7 내지 1/3이다. 제 1 면(122a)의 최대 직경은 1/6 내지 1/2이고, 이때 제 1 면(122a)의 폭은 렌즈(120) 직경의 1/36 내지 1/24이다. 제 3 면(122c)의 최대 직경은 1/5 내지 3/2이고, 이때 제 3 면(122c)의 폭은 렌즈(120) 직경의 1/24 내지 1/7이다. 제 4 면(122d)은 렌즈(120) 전체 직경과 동일하다.

<77> 또한, 렌즈(120)의 높이를 1로 하였을 경우에 제 1 전반사면(121a)의 높이는 1/4 내지 3/4이고, 제 2 전반사면(121b)의 높이는 1/6 내지 1/4이며, 제 2 면(122b)의 높이는 1/12 내지 1/8이고, 제 4 면(122d)의 높이는 7/8 내지 11/12이다. 여기서, 제 4 면(122d)은 도면에서와 같이 타원형으로 형성되고, 타원의 단축과 장축의 비가 1:4 이하의 범위 내로 이루어진다. 즉, 이는 원형일 수도 있다.

<78> 이를 통해, 도 10에 도시된 바와 같이 광원(발광칩)으로 부터 제 1 및 제 2 전반사면(121a, 121b)으로 조사된 광(R2, R6)은 전반사되고, 면들(122a, 122b, 122c, 122d)을 통해 y축 방향으로 광이 출사된다. 또한, 제 1 내지 제 4 면(122a, 122b, 122c, 122d)으로 조사된 광(R5, R4, R3, R1)은 굴절되어 y축 방향으로 광이 출사된다.

<79> 이와 같이 본 발명의 렌즈(120)는 중앙부에 각기 다른 기울기를 갖는 전반사면을 갖고, 가장자리에 라운딩형 면 복수의 수평형 면 및 수직형 면을 갖도록 형성하여 도 11에 도시된 바와 같이 광도의 피크값이 ±76도에서 ±10도 범위 내에 위치한다.

<80> 도 11에서는 굴절율이 1.5인 렌즈(120)를 사용하였고, 제 1 전반사면(121a)과 발광 칩(110)으로부터 방출되는 광이 이루는 각이 임계각보다 큰 약 50도가 되도록하고, 제 2 전반사면(121b)과 발광 칩(110)으로부터 방출되는 광이 이루는 각이 약 43도가 되도록 한 후, 발광 칩이 위치한 영역을 기준으로 +90도에서 -90도의 범위내에서의 광의 강도를 시뮬레이션하여 그 결과를 그래프로 나타내었다.

<81> 도 11의 그래프에서와 같이 ±76도 근방에서 그 강도가 가장 높다. 즉, +76도에서 그 강도가 약 0.98 정도이고, -77도에서는 그 강도가 약 0.97 정도이다. 또한, ±40도 내에서 광의 강도가 0.2 이하이다.

<82> 이하 렌즈의 제작 방법과 발광 소자는 앞서 설명한 실시예와 동일함으로 생략한다.

<83> 하기에서는, 1번 절곡된 직선형의 면과, 이로부터 연장된 곡선형의 면을 갖는 본 발명의 제 4 실시예에 따른 측면 발광용 렌즈와 발광 소자에 관해 설명한다.

<84> <실시예4>

<85> 도 12a는 본 발명의 제 4 실시예에 따른 발광 소자의 단면도이고, 도 12b는 제 4 실시예에 따른 렌즈의 사시도이다. 도 13은 제 4 실시예에 따른 내부 전반사 렌즈의 동작을 설명하기 위한 개념도이고, 도 14는 제 4 실시예에 따른 발광 소자의 시뮬레이션 결과 그래프이다.

<86> 도 12a, 도 12b 및 도 13을 참조하면, 본 실시예에 따른 발광 소자는 기판(100)과, 기판(100)상에 실장된 발광 칩(110)과, 발광 칩(110)을 봉지하며, 중심축(x)에 대해 소정의 기울기를 갖는 단면이 브이(V)자 형상의 제 1 전반사면(121a)과

제 1 전반사면(121a)의 기울기보다 완만한 기울기를 갖는 제 2 전반사면(121b)과, 상기 중심축(x)과 수평 방향으로 상기 제 2 전반사면(121b)의 주연부에서 하향 연장된 직선형의 제 1 면(122a)과, 상기 중심축(x)과 수직 방향으로 상기 제 1 면(122a)의 주연부에서 연장된 직선형의 제 2 면(122b)과 상기 제 2 면(122b)의 주연부에서 하향 연장된 곡선형의 제 3 면(122c)을 갖는 렌즈(120)를 포함한다.

<87> 상술한 본 실시예의 렌즈에 관해 먼저 살펴보면 다음과 같다.

<88> 도 12a 및 도 12b에 도시된 바와 같이 상기에서 전체 렌즈(120)의 직경을 1로 하였을 경우, 제 1 전반사면(121a)의 최대 직경은 1/12 내지 1/6이고, 제 2 전반사면(121b)의 최대 직경은 1/7 내지 1/3이다. 제 2 면(122b)의 최대 직경은 1/6 내지 2/3이고, 이때 제 2 면(122b)의 폭은 렌즈(120) 직경의 1/12 내지 1/6이다. 제 3 면(122c)은 렌즈(120) 전체 직경과 동일하다.

<89> 또한, 렌즈(120)의 높이를 1로 하였을 경우에 제 1 전반사면(121a)의 높이는 1/4 내지 3/4이고, 제 2 전반사면(121b)의 높이는 1/6 내지 1/4이며, 제 1 면(122a)의 높이는 1/12 내지 1/8이고, 제 3 면(122c)의 높이는 7/8 내지 11/12이다. 여기서, 제 3 면(122c)은 도면에서와 같이 타원형으로 형성되고, 타원의 단축과 장축의 비가 1:4 이하의 범위 내로 이루어진다. 즉, 이는 원형일 수도 있다.

<90> 이를 통해, 도 13에 도시된 바와 같이 광원(발광칩)으로 부터 제 1 및 제 2 전반사면(121a, 121b)으로 조사된 광(R2, R4)은 전반사되고, 면들(122a, 122b, 122c)을 통해 y축 방향으로 광이 출사된다. 또한, 제 1 내지 제 3 면(122a, 122b, 122c)으로 조사된 광(R5, R3, R1)은 굴절되어 y축 방향으로 광이 출사된다.

<91> 이와 같이 본 발명의 렌즈(120)는 중앙부에 각기 다른 기울기를 갖는 전반사면을 갖고, 가장자리에 라인딩형 면 복수의 수평형 및 수직형 면을 갖도록 형성하여 도 14에 도시된 바와 같이 광도의 피크값이 ±70도에서 ±10도 범위 내에 위치한다.

<92> 도 11에서는 굴절율이 1.5인 렌즈(120)를 사용하였고, 제 1 전반사면(121a)과 발광 칩(110)으로부터 방출되는 광이 이루는 각이 임계각보다 큰 약 50도가 되도록하고, 제 2 전반사면(121b)과 발광 칩(110)으로부터 방출되는 광이 이루는 각이 약 43도가 되도록 한 후, 발광 칩이 위치한 영역을 기준으로 +90도에서 -90도의 범위내에서의 광의 강도를 시뮬레이션하여 그 결과를 그래프로 나타내었다.

<93> 도 11의 그래프에서와 같이 ±70도 근방에서 그 강도가 가장 높다. 즉, +72도에서 그 강도가 약 1.0 정도이고, -70도에서는 그 강도가 약 0.97 정도이며, ±40도 내에서 광의 강도가 0.2 이하이다.

【발명의 효과】

<94> 상술한 바와 같이 본 발명은 내부 전반사면과, 내부 전반사면의 중심축과 수직 또는 수평한 축 방향으로 형성되는 직선형의 면 및 곡선형의 면을 갖는 렌즈를 통해 발광 칩의 전면으로 방사되는 광을 측면으로 유도할 수 있다.

<95> 또한, 렌즈 가장자리에 중심축에 대하여 수직 또는 수평한 축방향으로 형성되는 직선형의 면과 곡선형의 면을 형성함으로 렌즈의 제조공정이 쉬워지고, 이로 인해 렌즈 제작시 불량율을 줄일 수 있고, 렌즈의 제작 단가를 줄일 수 있다.

<96> 본 발명을 첨부 도면과 전술된 바람직한 실시예를 참조하여 설명하였으나, 본 발명은 그에 한정되지 않으며, 후술되는 특허청구범위에 의해 한정된다. 따라서, 본 기술분야의 통상의 지식을 가진 자라면 후술되는 특허청구범위의 기술적 사상에서 벗어나지 않는 범위 내에서 본 발명을 다양하게 변형 및 수정할 수 있다.

【특허청구범위】

【청구항 1】

몸체;

상기 몸체의 중심축에 대해 전반사 기울기를 갖고 중심부에 위치된 전반사면;

상기 전반사면의 주연부에서 절곡되어 형성되는 직선형 면; 및

상기 직선형 면의 주연부에서 연장 형성되는 곡선형 면을 포함하는 렌즈.

【청구항 2】

몸체;

상기 몸체의 중심축에 대해 전반사 기울기를 갖고 중심부에 위치된 전반사면;

상기 전반사면의 주연부에서 연장 형성되는 곡선형 면; 및

상기 곡선형 면의 주연부에서 절곡되어 형성되는 직선형 면을 포함하는 렌즈.

【청구항 3】

청구항 1 또는 청구항 2에 있어서,

상기 곡선형 면은 타원형상으로, 타원의 단축과 장축의 비가 1:4 이하인 렌

즈.

【청구항 4】

청구항 1 또는 청구항 2에 있어서,

상기 직선형 면은 1회 이상 절곡되는 것을 특징으로 하는 렌즈.

【청구항 5】

청구항 1 또는 청구항 2에 있어서,

상기 몸체의 굴절율이 1.2 내지 2.0인 렌즈.

【청구항 6】

청구항 1 또는 청구항 2에 있어서, 상기 전반사면은,

소정의 기울기를 갖는 단면이 브이(V)자 형 홈 형상의 제 1 전반사면; 및

상기 제 1 전반사면의 주연부에서 상향 연장되어 상기 중심축에 대해 상기 제 1 전반사면보다 큰 구배를 갖도록 경사지게 형성된 제 2 전반사면을 포함하는 렌즈.

【청구항 7】

기판;

상기 기판 상에 실장된 발광 칩; 및

상기 발광 칩을 봉지하며 중심에 전반사 기울기를 갖는 전반사면과, 상기 전반사면의 주연부에서 절곡되어 형성되는 직선형 면과, 상기 직선형 면의 주연부에서 연장 형성되는 곡선형 면을 포함하는 렌즈를 포함하는 발광 소자.

【청구항 8】

기판;

상기 기판 상에 실장된 발광 칩; 및

상기 발광 칩을 봉지하며 중심에 전반사 기울기를 갖는 전반사면과, 상기 전반사면의 주연부에서 연장 형성되는 곡선형 면과 상기 곡선형 면의 주연부에서 절곡되어 형성되는 직선형 면을 포함하는 렌즈를 포함하는 발광 소자.

【청구항 9】

청구항 7 또는 청구항 8에 있어서,

상기 곡선형 면은 타원형으로 형성되고, 타원의 단축과 장축의 비가 1:4 이하인 렌즈를 포함하는 발광 소자.

【청구항 10】

청구항 7 또는 청구항 8에 있어서,

상기 직선형 면은 1회 이상 절곡되는 것을 특징으로 하는 렌즈를 포함하는

발광 소자.

【청구항 11】

청구항 7 또는 청구항 8에 있어서,

상기 몸체의 굴절율이 1.2 내지 2.0인 렌즈를 포함하는 발광 소자.

【도면】

【도 1a】

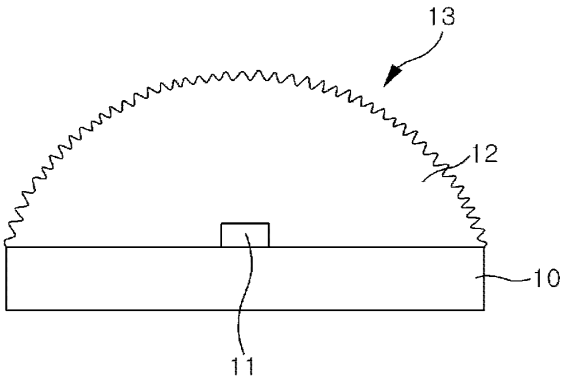

【도 1b】

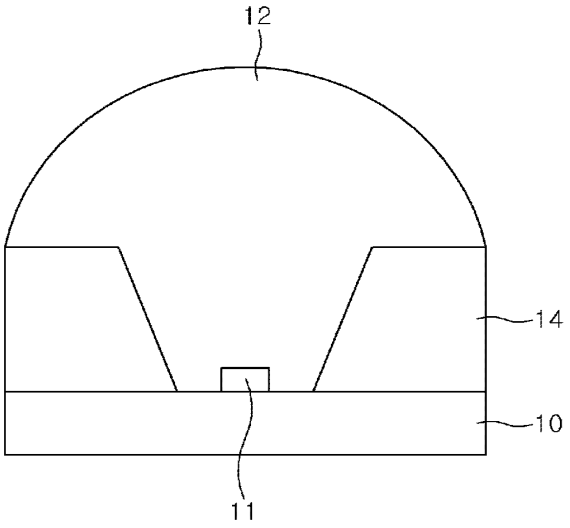

【도 2】

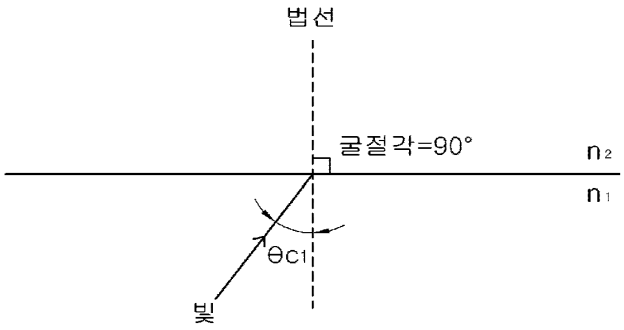

(a)

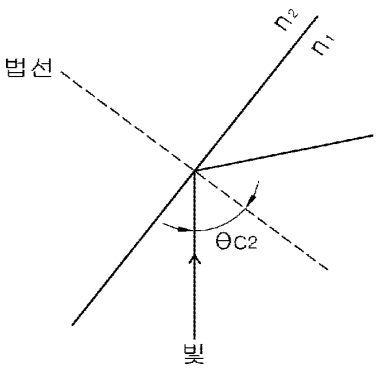

(b)

【도 3a】

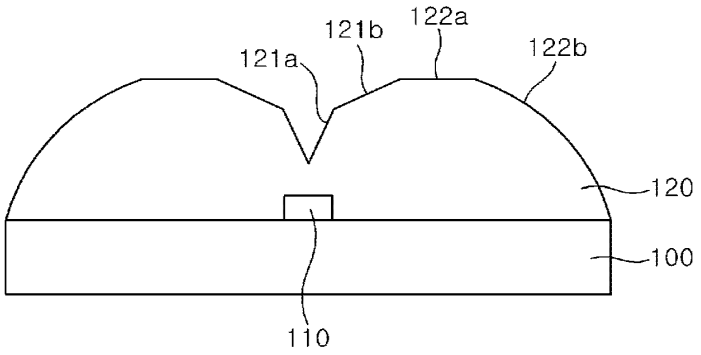

【도 3b】

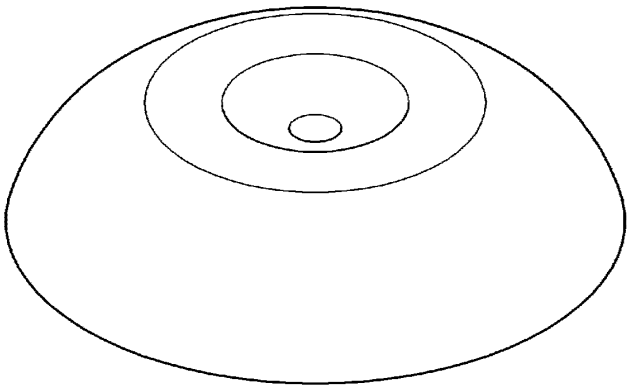

【도 4】

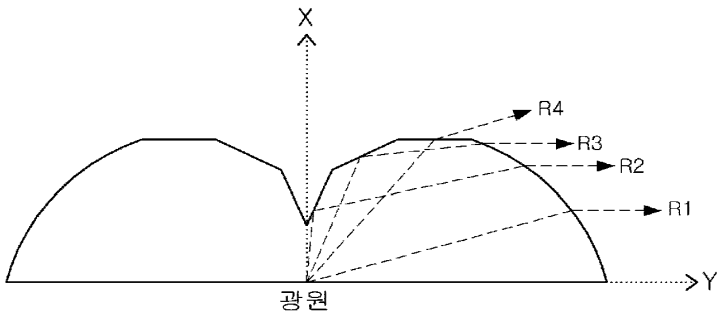
X
R4
R3
R2
R1
Y
광원

【도 5】

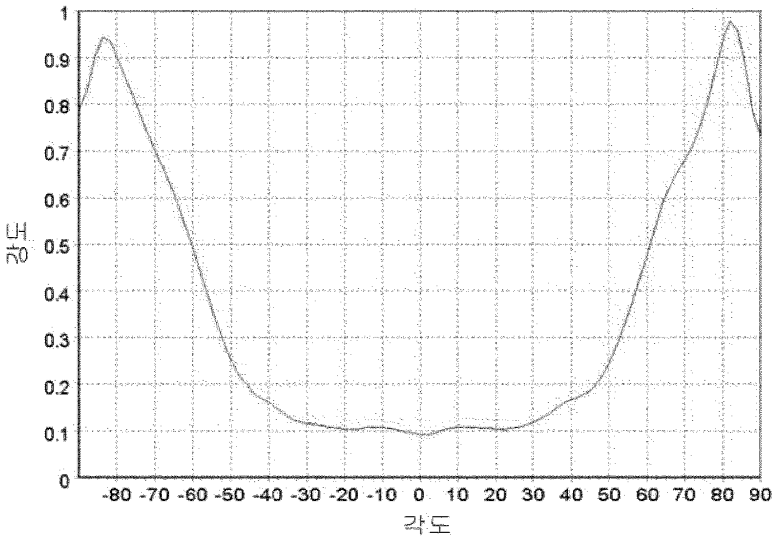
1
0.9
0.8
0.7
0.6
0.5
0.4
0.3
0.2
0.1
0
강도
-80 -70 -60 -50 -40 -30 -20 -10 0 10 20 30 40 50 60 70 80 90
각도

【도 6a】

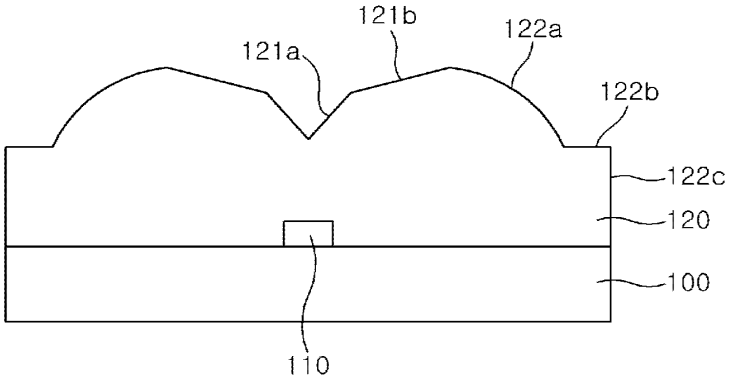

【도 6b】

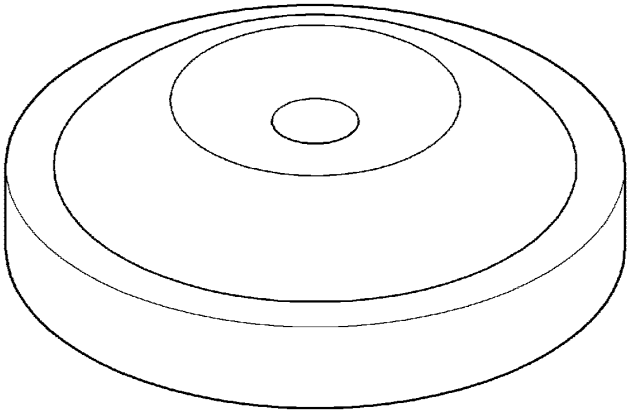

【도 7】

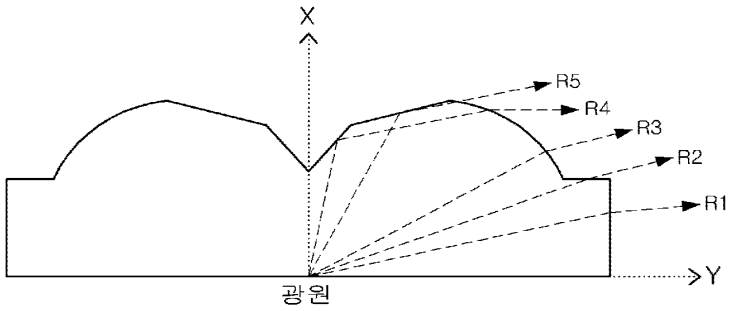
X
R5
R4
R3
R2
R1
Y
광원

【도 8】

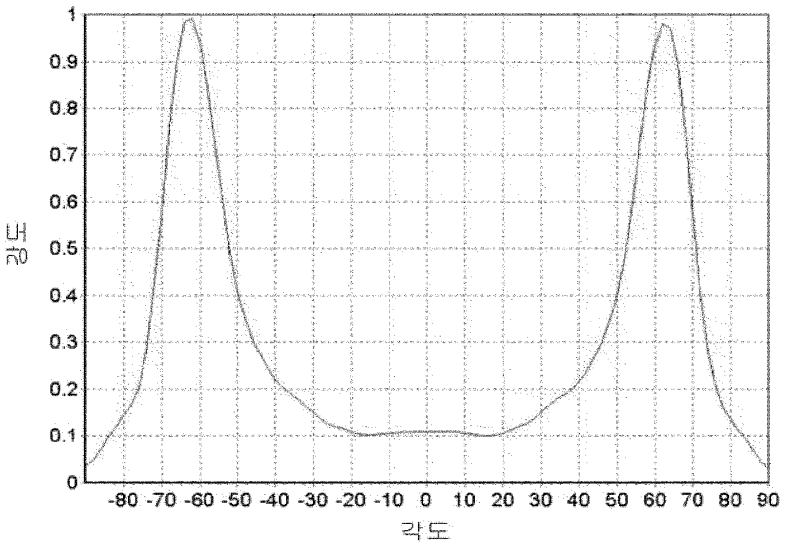
1
0.9
0.8
0.7
0.6
0.5
0.4
0.3
0.2
0.1
0
강도
-80 -70 -60 -50 -40 -30 -20 -10 0 10 20 30 40 50 60 70 80 90
각도

【도 9a】

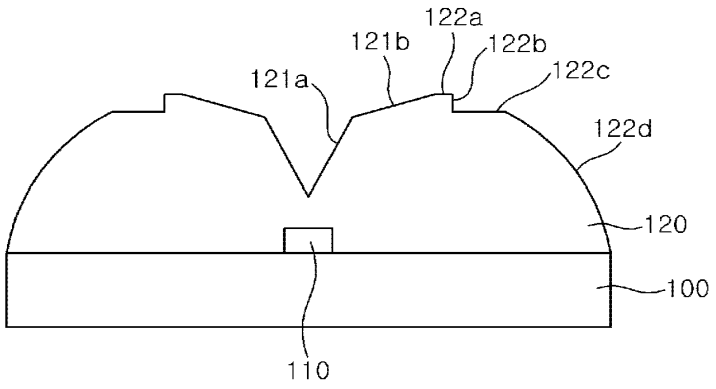

【도 9b】

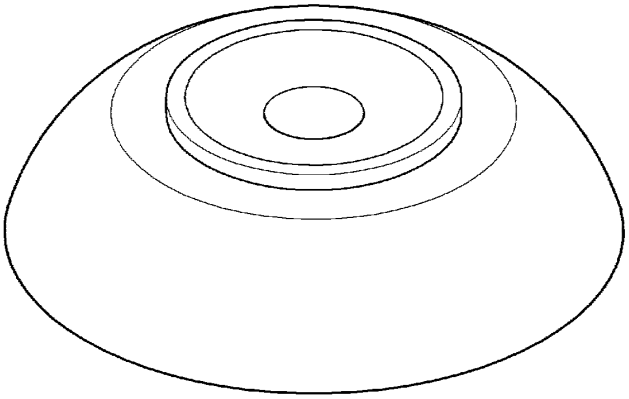

【도 10】

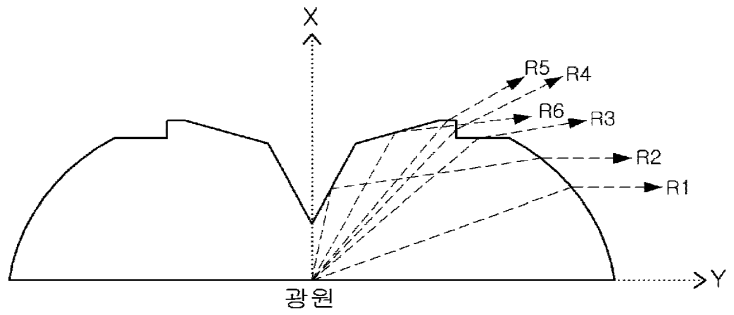
X
R5
R4
R6
R3
R2
R1
Y
광원

【도 11】

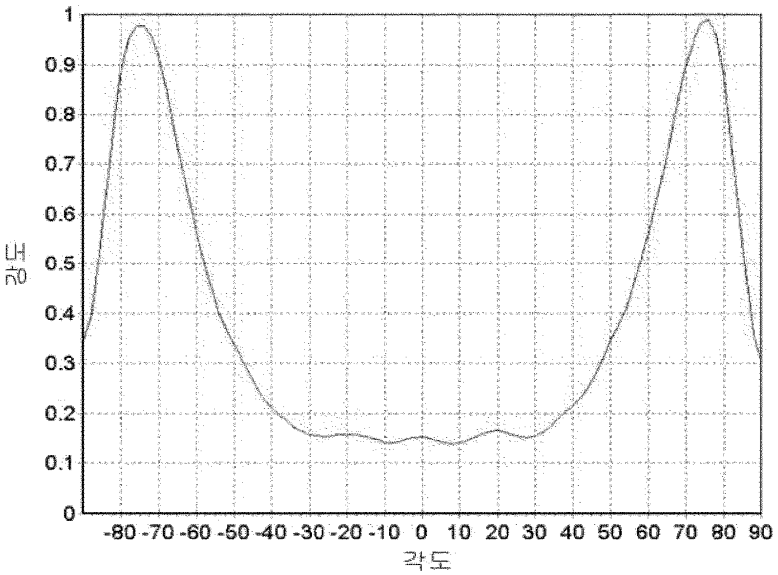
1
0.9
0.8
0.7
0.6
0.5
0.4
0.3
0.2
0.1
0
강도
-80 -70 -60 -50 -40 -30 -20 -10 0 10 20 30 40 50 60 70 80 90
각도

【도 12a】

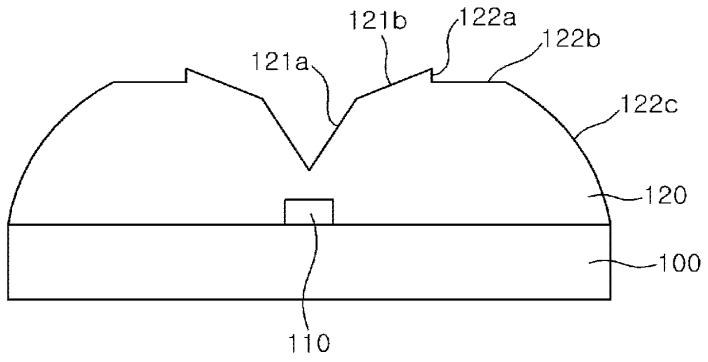

【도 12b】

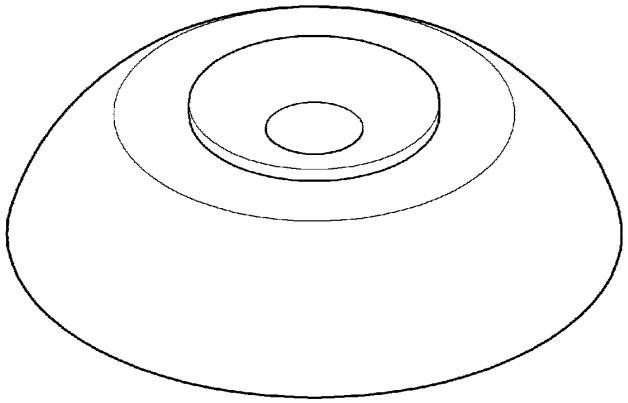

【도 13】

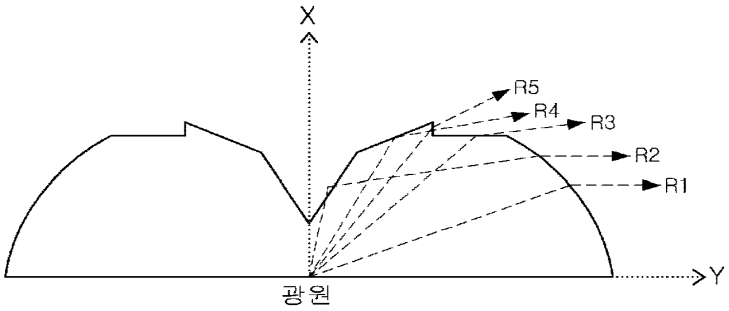
X
R5
R4
R3
R2
R1
Y
광원

【도 14】

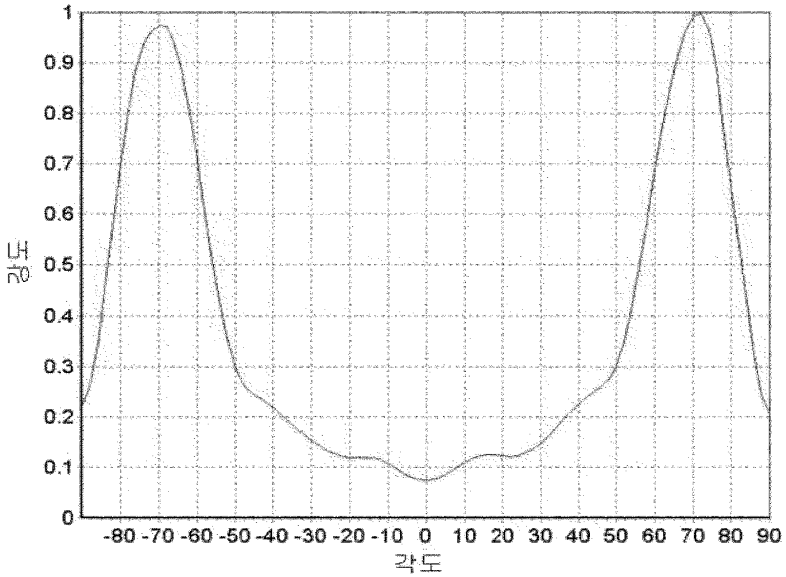
1
0.9
0.8
0.7
0.6
0.5
0.4
0.3
0.2
0.1
0
강도
-80 -70 -60 -50 -40 -30 -20 -10 0 10 20 30 40 50 60 70 80 90
각도

Document code: WFEE

United States Patent and Trademark Office
Sales Receipt for Accounting Date: 09/04/2007

VIRBY1 SALE #00000009 Mailroom Dt: 04/06/2007 131703 11576882
01 FC : 1616 360.00 DA

PTO/SB/08a (08-03)
Approved for use through 07/31/2006. OMB 0651-0031
U.S. Patent and Trademark Office; U.S. DEPARTMENT OF COMMERCE
Under the Paperwork Reduction Act of 1995, no persons are required to respond to a collection of information unless it contains a valid OMB control number.

INFORMATION DISCLOSURE STATEMENT BY APPLICANT (**Not for submission under 37 CFR 1.99)**	Application Number	11576882
	Filing Date	2007-04-06
	First Named Inventor	Do-Hyung KIM
	Art Unit	
	Examiner Name	
	Attorney Docket Number	3576-043

U.S.PATENTS Remove

Examiner Initial*	Cite No	Patent Number	Kind Code[1]	Issue Date	Name of Patentee or Applicant of cited Document	Pages,Columns,Lines where Relevant Passages or Relevant Figures Appear
	1	6598998		2003-07-29	West et al.	

If you wish to add additional U.S. Patent citation information please click the Add button. Add

U.S.PATENT APPLICATION PUBLICATIONS Remove

Examiner Initial*	Cite No	Publication Number	Kind Code[1]	Publication Date	Name of Patentee or Applicant of cited Document	Pages,Columns,Lines where Relevant Passages or Relevant Figures Appear
	1					

If you wish to add additional U.S. Published Application citation information please click the Add button. Add

FOREIGN PATENT DOCUMENTS Remove

Examiner Initial*	Cite No	Foreign Document Number[3]	Country Code[2] ¡	Kind Code[4]	Publication Date	Name of Patentee or Applicant of cited Document	Pages,Columns,Lines where Relevant Passages or Relevant Figures Appear	T[5]
	1							☐

If you wish to add additional Foreign Patent Document citation information please click the Add button Add

NON-PATENT LITERATURE DOCUMENTS Remove

Examiner Initials*	Cite No	Include name of the author (in CAPITAL LETTERS), title of the article (when appropriate), title of the item (book, magazine, journal, serial, symposium, catalog, etc), date, pages(s), volume-issue number(s), publisher, city and/or country where published.	T[5]

INFORMATION DISCLOSURE STATEMENT BY APPLICANT (Not for submission under 37 CFR 1.99)	Application Number	11576882
	Filing Date	2007-04-06
	First Named Inventor	Do-Hyung KIM
	Art Unit	
	Examiner Name	
	Attorney Docket Number	3576-043

	1		☐

If you wish to add additional non-patent literature document citation information please click the Add button Add

EXAMINER SIGNATURE			
Examiner Signature		Date Considered	

*EXAMINER: Initial if reference considered, whether or not citation is in conformance with MPEP 609. Draw line through a citation if not in conformance and not considered. Include copy of this form with next communication to applicant.

[1] See Kind Codes of USPTO Patent Documents at www.USPTO.GOV or MPEP 901.04. [2] Enter office that issued the document, by the two-letter code (WIPO Standard ST.3). [3] For Japanese patent documents, the indication of the year of the reign of the Emperor must precede the serial number of the patent document. [4] Kind of document by the appropriate symbols as indicated on the document under WIPO Standard ST.16 if possible. [5] Applicant is to place a check mark here if English language translation is attached.

INFORMATION DISCLOSURE STATEMENT BY APPLICANT (Not for submission under 37 CFR 1.99)	Application Number	11576882
	Filing Date	2007-04-06
	First Named Inventor	Do-Hyung KIM
	Art Unit	
	Examiner Name	
	Attorney Docket Number	3576-043

CERTIFICATION STATEMENT

Please see 37 CFR 1.97 and 1.98 to make the appropriate selection(s):

☐ That each item of information contained in the information disclosure statement was first cited in any communication from a foreign patent office in a counterpart foreign application not more than three months prior to the filing of the information disclosure statement. See 37 CFR 1.97(e)(1).

OR

☐ That no item of information contained in the information disclosure statement was cited in a communication from a foreign patent office in a counterpart foreign application, and, to the knowledge of the person signing the certification after making reasonable inquiry, no item of information contained in the information disclosure statement was known to any individual designated in 37 CFR 1.56(c) more than three months prior to the filing of the information disclosure statement. See 37 CFR 1.97(e)(2).

☐ See attached certification statement.

☐ Fee set forth in 37 CFR 1.17 (p) has been submitted herewith.

☐ None

SIGNATURE

A signature of the applicant or representative is required in accordance with CFR 1.33, 10.18. Please see CFR 1.4(d) for the form of the signature.

Signature	/Hosoon Lee/	Date (YYYY-MM-DD)	2007-04-27
Name/Print	Hosoon Lee	Registration Number	56737

This collection of information is required by 37 CFR 1.97 and 1.98. The information is required to obtain or retain a benefit by the public which is to file (and by the USPTO to process) an application. Confidentiality is governed by 35 U.S.C. 122 and 37 CFR 1.14. This collection is estimated to take 1 hour to complete, including gathering, preparing and submitting the completed application form to the USPTO. Time will vary depending upon the individual case. Any comments on the amount of time you require to complete this form and/or suggestions for reducing this burden, should be sent to the Chief Information Officer, U.S. Patent and Trademark Office, U.S. Department of Commerce, P.O. Box 1450, Alexandria, VA 22313-1450. DO NOT SEND FEES OR COMPLETED FORMS TO THIS ADDRESS. **SEND TO: Commissioner for Patents, P.O. Box 1450, Alexandria, VA 22313-1450.**

Privacy Act Statement

The Privacy Act of 1974 (P.L. 93-579) requires that you be given certain information in connection with your submission of the attached form related to a patent application or patent. Accordingly, pursuant to the requirements of the Act, please be advised that: (1) the general authority for the collection of this information is 35 U.S.C. 2(b)(2); (2) furnishing of the information solicited is voluntary; and (3) the principal purpose for which the information is used by the U.S. Patent and Trademark Office is to process and/or examine your submission related to a patent application or patent. If you do not furnish the requested information, the U.S. Patent and Trademark Office may not be able to process and/or examine your submission, which may result in termination of proceedings or abandonment of the application or expiration of the patent.

The information provided by you in this form will be subject to the following routine uses:

1. The information on this form will be treated confidentially to the extent allowed under the Freedom of Information Act (5 U.S.C. 552) and the Privacy Act (5 U.S.C. 552a). Records from this system of records may be disclosed to the Department of Justice to determine whether the Freedom of Information Act requires disclosure of these record s.

2. A record from this system of records may be disclosed, as a routine use, in the course of presenting evidence to a court, magistrate, or administrative tribunal, including disclosures to opposing counsel in the course of settlement negotiations.

3. A record in this system of records may be disclosed, as a routine use, to a Member of Congress submitting a request involving an individual, to whom the record pertains, when the individual has requested assistance from the Member with respect to the subject matter of the record.

4. A record in this system of records may be disclosed, as a routine use, to a contractor of the Agency having need for the information in order to perform a contract. Recipients of information shall be required to comply with the requirements of the Privacy Act of 1974, as amended, pursuant to 5 U.S.C. 552a(m).

5. A record related to an International Application filed under the Patent Cooperation Treaty in this system of records may be disclosed, as a routine use, to the International Bureau of the World Intellectual Property Organization, pursuant to the Patent Cooperation Treaty.

6. A record in this system of records may be disclosed, as a routine use, to another federal agency for purposes of National Security review (35 U.S.C. 181) and for review pursuant to the Atomic Energy Act (42 U.S.C. 218(c)).

7. A record from this system of records may be disclosed, as a routine use, to the Administrator, General Services, or his/her designee, during an inspection of records conducted by GSA as part of that agency's responsibility to recommend improvements in records management practices and programs, under authority of 44 U.S.C. 2904 and 2906. Such disclosure shall be made in accordance with the GSA regulations governing inspection of records for this purpose, and any other relevant (i.e., GSA or Commerce) directive. Such disclosure shall not be used to make determinations about individuals.

8. A record from this system of records may be disclosed, as a routine use, to the public after either publication of the application pursuant to 35 U.S.C. 122(b) or issuance of a patent pursuant to 35 U.S.C. 151. Further, a record may be disclosed, subject to the limitations of 37 CFR 1.14, as a routine use, to the public if the record was filed in an application which became abandoned or in which the proceedings were terminated and which application is referenced by either a published application, an application open to public inspections or an issued patent.

9. A record from this system of records may be disclosed, as a routine use, to a Federal, State, or local law enforcement agency, if the USPTO becomes aware of a violation or potential violation of law or regulation.

Electronic Acknowledgement Receipt

EFS ID:	1725624
Application Number:	11576882
International Application Number:	
Confirmation Number:	6820
Title of Invention:	SIDE ILLUMINATION LENS AND LUMINESCENT DEVICE USING THE SAME
First Named Inventor/Applicant Name:	Do-Hyung KIM
Customer Number:	20575
Filer:	Alexander Charles Johnson/Li mei Vermilya
Filer Authorized By:	Alexander Charles Johnson
Attorney Docket Number:	3576-043
Receipt Date:	27-APR-2007
Filing Date:	
Time Stamp:	18:24:41
Application Type:	U.S. National Stage under 35 USC 371

Payment information:

Submitted with Payment	no

File Listing:

Document Number	Document Description	File Name	File Size(Bytes)	Multi Part /.zip	Pages (if appl.)
1	Information Disclosure Statement (IDS) Filed	US_IDS_Form_SB_08a.pdf	654903	no	4
Warnings:					

Information:	
Total Files Size (in bytes):	654903

This Acknowledgement Receipt evidences receipt on the noted date by the USPTO of the indicated documents, characterized by the applicant, and including page counts, where applicable. It serves as evidence of receipt similar to a Post Card, as described in MPEP 503.

New Applications Under 35 U.S.C. 111
If a new application is being filed and the application includes the necessary components for a filing date (see 37 CFR 1.53(b)-(d) and MPEP 506), a Filing Receipt (37 CFR 1.54) will be issued in due course and the date shown on this Acknowledgement Receipt will establish the filing date of the application.

National Stage of an International Application under 35 U.S.C. 371
If a timely submission to enter the national stage of an international application is compliant with the conditions of 35 U.S.C. 371 and other applicable requirements a Form PCT/DO/EO/903 indicating acceptance of the application as a national stage submission under 35 U.S.C. 371 will be issued in addition to the Filing Receipt, in due course.

New International Application Filed with the USPTO as a Receiving Office
If a new international application is being filed and the international application includes the necessary components for an international filing date (see PCT Article 11 and MPEP 1810), a Notification of the International Application Number and of the International Filing Date (Form PCT/RO/105) will be issued in due course, subject to prescriptions concerning national security, and the date shown on this Acknowledgement Receipt will establish the international filing date of the application.

DO/ EO WORKSHEET

Virginia Irby, Patent Application Specialist/ National Stage Division

U.S. Appl. No. 11/576882 International Appl. No. PCT/KR05/03346

Application filed by : ☐ 20 months ☑ 30 months

WIPO PUBLICATION INFORMATION :

Publication No.: WO2006/080729 Publication Language : ☑ English ☐ German ☐ Japanese ☐ Chinese ☐ Korean ☐ French ☐ Spanish ☐ Russian ☐ Other : _____

Publication Date : 03 Aug 2006 Not Published : ☐ U.S. only designated ☐ EP request Published : ☐ EP request

INTERNATIONAL APPLICATION PAPERS IN THE APPLICATION FILE :

- ☑ International Application *(RECORD COPY)*
- ☐ Article 19 Amendments
- ☐ PCT/IPEA/409 IPER : ☐ EP ☐ JP ☐ SE ☐ AU ☐ US ☐ FR ☐ CN ☐ ES ☐ RU ☐ AT ☐ KR ☐ ___
- ☐ Annexes to 409
- ☐ PCT/ISA/237 : ☐ EP ☐ JP ☐ SE ☐ AU ☐ US ☐ FR ☐ CN ☐ ES ☐ RU ☐ AT ☐ KR ☐ ___
  - ☐ PCT/IPEA/409 or PCT/ISA/237 was NOT AVAILABLE at the time of paralegal review
- ☐ PCT/IB/306
- ☐ Request form PCT/RO/101
- ☑ PCT/ISA/210 - Search Report : ☐ EP ☐ JP ☐ SE ☐ AU ☐ US ☐ FR ☐ CN ☐ ES ☐ RU ☐ AT ☑ KR ☐ ___ ☐ NONE
- ☐ Search Report References
- ☑ Priority Document (s) No. 4
  - ☐ N/A
  - ☐ Priority Document was NOT AVAILABLE at the time of paralegal review
- ☐ Other : _____

RECEIPTS FROM THE APPLICANT *(other than checked above) :*

- ☑ Basic National Fee *(or authorization to charge)* I
- ☑ Description 27 ☑ Claims 2 ☑ Abstract
- ☑ Drawing Figure(s) - (# of drwgs. 24)
- ☐ Translation of Article 19 Amendments ☐ entered ☐ not entered :
  - ☐ not a page for page substitution
  - ☐ replaced by Article 34 Amendment
- ☐ Annexes to 409 ☐ entered ☐ not entered :
  - ☐ not a page for page substitution
  - ☐ no translation ☐ other : _____
- ☑ Application Data Sheet
- ☐ Power of Attorney
- ☐ Change of Address
- ☐ Preliminary Amendment(s) Filed on : 1. ☐ same as 371 request date 2. _____ 3. _____
- ☑ Information Disclosure Statement(s) Filed on : 1. ☑ same as 371 request date 2. 4-27-07 3. _____
- ☐ Assignment Document (forwarded to Assignment Branch)
- ☐ Assignee Statement Under 37 CFR 3.73(b)
- ☐ Assignee PG Publication Notice
- ☐ Substitute Specification Filed on : 1. ☐ same as 371 request date 2. _____ 3. _____
- ☐ Verified Small Status Statement
- ☑ Oath/ Declaration (executed)
- ☐ Oath/ Declaration ☐ unsigned ☐ no citizenship ☐ other
- ☐ DNA Diskette ☐ Sequence Listing
- ☐ Other : _____

NOTES : ☑ I.A. used as Specification ☐ Other :

35 U.S.C. 371 - Receipt of Request (PTO-1390)	06 April 2007
Date Acceptable Oath/ Declaration Received	06 April 2007
Date of Completion of requirements under 35 U.S.C. 371	06 April 2007
Date of Completion of DO/ EO 903 - Notification of Acceptance	04 Sept 2007
Date of Completion of DO/ EO 905 - Notification of Missing Requirements	
Date of Completion of DO/ EO 909 - Notification of Abandonment	
Date of Completion of DO/ EO 916 - Notification of Defective Response	
Date of Completion of DO/ EO 922 - Notification to Comply w/ Requirements for Patent Applications Containing Nucleotide and/or Amino Acid Sequence Disclosures	
Date of Completion of DO/ EO 923	

MULTIPLE DEPENDENT CLAIM FEE CALCULATION SHEET
(FOR USE WITH FORM PTO-875)

SERIAL NO. 11/576882

FILING DATE

APPLICANT(S)

CLAIMS

	AS FILED		AFTER 1st AMENDMENT		AFTER 2nd AMENDMENT	
	IND.	DEP.	IND.	DEP.	IND.	DEP.
1	1					
2		1				
3		1				
4		3				
5		3				
6		1				
7		1				
8	1					
9		1				
10		1				
11		1				
12	1					
13		1				
14		1				
15		1				
16						
17						
18						
19						
20						
21						
22						
23						
24						
25						
26						
27						
28						
29						
30						
31						
32						
33						
34						
35						
36						
37						
38						
39						
40						
41						
42						
43						
44						
45						
46						
47						
48						
49						
50						
TOTAL IND.	3					
TOTAL DEP.	16					
TOTAL CLAIMS	19					

	AS FILED		AFTER 1st AMENDMENT		AFTER 2nd AMENDMENT	
	IND.	DEP.	IND.	DEP.	IND.	DEP.
51						
52						
53						
54						
55						
56						
57						
58						
59						
60						
61						
62						
63						
64						
65						
66						
67						
68						
69						
70						
71						
72						
73						
74						
75						
76						
77						
78						
79						
80						
81						
82						
83						
84						
85						
86						
87						
88						
89						
90						
91						
92						
93						
94						
95						
96						
97						
98						
99						
100						
TOTAL IND.						
TOTAL DEP.						
TOTAL CLAIMS						

PTO - 1360 (REV. 11/04)

U.S. DEPARTMENT of COMMERCE
Patent and Trademark Office

PATENT APPLICATION FEE DETERMINATION RECORD

Effective December 8, 2004

Application or Docket Number: 11/576882

CLAIMS AS FILED - PART I

	(Column 1)	(Column 2)	SMALL ENTITY TYPE ☐ RATE	FEE	OR	OTHER THAN SMALL ENTITY RATE	FEE
U.S. NATIONAL STAGE FEES							
BASIC FEE	SMALL ENT. = $ 150	LARGE ENT. = $ 300	BASIC FEE		OR	BASIC FEE	300
EXAMINATION FEE	Satisfies PCT Article 33(1)-(4) = $ 50 / $ 100	All other situations = $ 100 / $ 200	EXAM. FEE			EXAM. FEE	200
SEARCH FEE	U.S. is ISA = $ 50 / $ 100 ALL other countries = $ 200 / $ 400	ALL other situations = $ 250 / $ 500	SEARCH FEE			SEARCH FEE	400
FEE FOR EXTRA SPEC. PGS.	minus 100 =	/ 50 =	X $ 125 =			X $ 250 =	
TOTAL CHARGEABLE CLAIMS	19 minus 20 =	*	X $ 25 =		OR	X $ 50 =	
INDEPENDENT CLAIMS	3 minus 3 =	*	X $ 100 =		OR	X $ 200 =	
MULTIPLE DEPENDENT CLAIM PRESENT		☒	+ $ 180 =		OR	+ $ 360 =	360
* If the difference in column 1 is less than zero, enter "0" in column 2			TOTAL		OR	TOTAL	1260

CLAIMS AS AMENDED - PART II

		(Column 1) CLAIMS REMAINING AFTER AMENDMENT		(Column 2) HIGHEST NUMBER PREVIOUSLY PAID FOR	(Column 3) PRESENT EXTRA	SMALL ENTITY RATE	ADDITIONAL FEE	OR	OTHER THAN SMALL ENTITY RATE	ADDITIONAL FEE
AMENDMENT A	Total	*	Minus	**	=	X $ 25 =		OR	X $ 50 =	
	Independent	*	Minus	***	=	X $ 100 =		OR	X $ 200 =	
	FIRST PRESENTATION OF MULTIPLE DEPENDENT CLAIM				☐	+ $ 180 =		OR	+ $ 360 =	
						TOTAL ADDIT. FEE		OR	TOTAL ADDIT. FEE	

		(Column 1) CLAIMS REMAINING AFTER AMENDMENT		(Column 2) HIGHEST NUMBER PREVIOUSLY PAID FOR	(Column 3) PRESENT EXTRA	RATE	ADDITIONAL FEE	OR	RATE	ADDITIONAL FEE
AMENDMENT B	Total	*	Minus	**	=	X $ 25 =		OR	X $ 50 =	
	Independent	*	Minus	***	=	X $ 100 =		OR	X $ 200 =	
	FIRST PRESENTATION OF MULTIPLE DEPENDENT CLAIM				☐	+ $ 180 =		OR	+ $ 360 =	
						TOTAL ADDIT. FEE		OR	TOTAL ADDIT. FEE	

* If the entry in column 1 is less than the entry in column 2, write "0" in column 3.
** If the "Highest Number Previously Paid For" IN THIS SPACE is less than '20', enter "20".
*** If the "Highest Number Previously Paid For" IN THIS SPACE is less than '3', enter "3".
The "Highest Number Previously Paid For" (Total or Independent) is the highest number found in the appropriate box in column 1.

UNITED STATES PATENT AND TRADEMARK OFFICE

UNITED STATES DEPARTMENT OF COMMERCE
United States Patent and Trademark Office
Address: COMMISSIONER FOR PATENTS
P.O. Box 1450
Alexandria, Virginia 22313-1450
www.uspto.gov

APPLICATION NUMBER	FILING or 371(c) DATE	GRP ART UNIT	FIL FEE REC'D	ATTY.DOCKET.NO	TOT CLAIMS	IND CLAIMS
11/576,882	04/06/2007	2873	1260	3576-043	15	3

CONFIRMATION NO. 6820

FILING RECEIPT

20575
MARGER JOHNSON & MCCOLLOM, P.C.
210 SW MORRISON STREET, SUITE 400
PORTLAND, OR97204

Date Mailed: 09/07/2007

Receipt is acknowledged of this non-provisional patent application. The application will be taken up for examination in due course. Applicant will be notified as to the results of the examination. Any correspondence concerning the application must include the following identification information: the U.S. APPLICATION NUMBER, FILING DATE, NAME OF APPLICANT, and TITLE OF INVENTION. Fees transmitted by check or draft are subject to collection. Please verify the accuracy of the data presented on this receipt. **If an error is noted on this Filing Receipt, please write to the Office of Initial Patent Examination's Filing Receipt Corrections. Please provide a copy of this Filing Receipt with the changes noted thereon. If you received a "Notice to File Missing Parts" for this application, please submit any corrections to this Filing Receipt with your reply to the Notice. When the USPTO processes the reply to the Notice, the USPTO will generate another Filing Receipt incorporating the requested corrections**

Applicant(s)

Do-Hyung Kim, Suwon, KOREA, REPUBLIC OF;
Chung-Hoon Lee, Gyeonggi-do, KOREA, REPUBLIC OF;
Keon-Young Lee, Ansan, KOREA, REPUBLIC OF;
Kwang-Il Park, Seoul, KOREA, REPUBLIC OF;

Assignment For Published Patent Application

SEOUL SEMICONDUCTOR CO., LTD., Seoul 153-023, KR

Power of Attorney: The patent practitioners associated with Customer Number 20575

Domestic Priority data as claimed by applicant

This application is a 371 of PCT/KR05/03346 10/07/2005

Foreign Applications

REPUBLIC OF KOREA 2004-0079909 10/07/2004
REPUBLIC OF KOREA 2005-0000269 01/03/2005
REPUBLIC OF KOREA 2005-0056436 06/28/2005
REPUBLIC OF KOREA 2005-0083743 09/08/2005

If Required, Foreign Filing License Granted: 09/04/2007

The country code and number of your priority application, to be used for filing abroad under the Paris Convention, is **US11/576,882**

Projected Publication Date: 12/13/2007

Non-Publication Request: No

Early Publication Request: No

Title

Side Illumination Lens and Luminescent Device Using the Same

Preliminary Class

359

PROTECTING YOUR INVENTION OUTSIDE THE UNITED STATES

Since the rights granted by a U.S. patent extend only throughout the territory of the United States and have no effect in a foreign country, an inventor who wishes patent protection in another country must apply for a patent in a specific country or in regional patent offices. Applicants may wish to consider the filing of an international application under the Patent Cooperation Treaty (PCT). An international (PCT) application generally has the same effect as a regular national patent application in each PCT-member country. The PCT process **simplifies** the filing of patent applications on the same invention in member countries, but **does not result** in a grant of "an international patent" and does not eliminate the need of applicants to file additional documents and fees in countries where patent protection is desired.

Almost every country has its own patent law, and a person desiring a patent in a particular country must make an application for patent in that country in accordance with its particular laws. Since the laws of many countries differ in various respects from the patent law of the United States, applicants are advised to seek guidance from specific foreign countries to ensure that patent rights are not lost prematurely.

Applicants also are advised that in the case of inventions made in the United States, the Director of the USPTO must issue a license before applicants can apply for a patent in a foreign country. The filing of a U.S. patent application serves as a request for a foreign filing license. The application's filing receipt contains further information and guidance as to the status of applicant's license for foreign filing.

Applicants may wish to consult the USPTO booklet, "General Information Concerning Patents" (specifically, the section entitled "Treaties and Foreign Patents") for more information on timeframes and deadlines for filing foreign patent applications. The guide is available either by contacting the USPTO Contact Center at 800-786-9199, or it can be viewed on the USPTO website at http://www.uspto.gov/web/offices/pac/doc/general/index.html.

For information on preventing theft of your intellectual property (patents, trademarks and copyrights), you may wish to consult the U.S. Government website, http://www.stopfakes.gov. Part of a Department of Commerce initiative, this website includes self-help "toolkits" giving innovators guidance on how to protect intellectual property in specific countries such as China, Korea and Mexico. For questions regarding patent enforcement issues, applicants may call the U.S. Government hotline at 1-866-999-HALT (1-866-999-4158).

LICENSE FOR FOREIGN FILING UNDER

Title 35, United States Code, Section 184

Title 37, Code of Federal Regulations, 5.11 & 5.15

GRANTED

The applicant has been granted a license under 35 U.S.C. 184, if the phrase "IF REQUIRED, FOREIGN FILING LICENSE GRANTED" followed by a date appears on this form. Such licenses are issued in all applications where the conditions for issuance of a license have been met, regardless of whether or not a license may be required as set forth in 37 CFR 5.15. The scope and limitations of this license are set forth in 37 CFR 5.15(a) unless an earlier license has been issued under 37 CFR 5.15(b). The license is subject to revocation upon written notification. The date indicated is the effective date of the license, unless an earlier

license of similar scope has been granted under 37 CFR 5.13 or 5.14.

This license is to be retained by the licensee and may be used at any time on or after the effective date thereof unless it is revoked. This license is automatically transferred to any related applications(s) filed under 37 CFR 1.53(d). This license is not retroactive.

The grant of a license does not in any way lessen the responsibility of a licensee for the security of the subject matter as imposed by any Government contract or the provisions of existing laws relating to espionage and the national security or the export of technical data. Licensees should apprise themselves of current regulations especially with respect to certain countries, of other agencies, particularly the Office of Defense Trade Controls, Department of State (with respect to Arms, Munitions and Implements of War (22 CFR 121-128)); the Bureau of Industry and Security, Department of Commerce (15 CFR parts 730-774); the Office of Foreign AssetsControl, Department of Treasury (31 CFR Parts 500+) and the Department of Energy.

NOT GRANTED

No license under 35 U.S.C. 184 has been granted at this time, if the phrase "IF REQUIRED, FOREIGN FILING LICENSE GRANTED" DOES NOT appear on this form. Applicant may still petition for a license under 37 CFR 5.12, if a license is desired before the expiration of 6 months from the filing date of the application. If 6 months has lapsed from the filing date of this application and the licensee has not received any indication of a secrecy order under 35 U.S.C. 181, the licensee may foreign file the application pursuant to 37 CFR 5.15(b).

UNITED STATES PATENT AND TRADEMARK OFFICE

UNITED STATES DEPARTMENT OF COMMERCE
United States Patent and Trademark Office
Address: COMMISSIONER FOR PATENTS
P.O. Box 1450
Alexandria, Virginia 22313-1450
www.uspto.gov

U.S. APPLICATION NUMBER NO.	FIRST NAMED APPLICANT	ATTY. DOCKET NO.
11/576,882	Do-Hyung Kim	3576-043

INTERNATIONAL APPLICATION NO.	
PCT/KR05/03346	
I.A. FILING DATE	PRIORITY DATE
10/07/2005	10/07/2004

20575
MARGER JOHNSON & MCCOLLOM, P.C.
210 SW MORRISON STREET, SUITE 400
PORTLAND, OR 97204

CONFIRMATION NO. 6820

371 ACCEPTANCE LETTER

OC000000025664245

Date Mailed: 09/07/2007

NOTICE OF ACCEPTANCE OF APPLICATION UNDER 35 U.S.C 371 AND 37 CFR 1.495

The applicant is hereby advised that the United States Patent and Trademark Office in its capacity as a Designated / Elected Office (37 CFR 1.495), has determined that the above identified international application has met the requirements of 35 U.S.C. 371, and is ACCEPTED for national patentability examination in the United States Patent and Trademark Office.

The United States Application Number assigned to the application is shown above and the relevant dates are:

04/06/2007	04/06/2007
DATE OF RECEIPT OF 35 U.S.C. 371(c)(1), (c)(2) and (c)(4) REQUIREMENTS	DATE OF COMPLETION OF ALL 35 U.S.C. 371 REQUIREMENTS

A Filing Receipt (PTO-103X) will be issued for the present application in due course. **THE DATE APPEARING ON THE FILING RECEIPT AS THE " FILING DATE" IS THE DATE ON WHICH THE LAST OF THE 35 U.S.C. 371 (c)(1), (c)(2) and (c)(4) REQUIREMENTS HAS BEEN RECEIVED IN THE OFFICE. THIS DATE IS SHOWN ABOVE.** *The filing date of the above identified application is the international filing date of the international application (Article 11(3) and 35 U.S.C. 363).* Once the Filing Receipt has been received, send all correspondence to the Group Art Unit designated thereon.

The following items have been received:

- Copy of the International Application filed on 04/06/2007
- Copy of the International Search Report filed on 04/06/2007
- Information Disclosure Statements filed on 04/06/2007
- Oath or Declaration filed on 04/06/2007
- Request for Immediate Examination filed on 04/06/2007
- U.S. Basic National Fees filed on 04/06/2007
- Priority Documents filed on 04/06/2007

Applicant is reminded that any communications to the United States Patent and Trademark Office must be mailed to the address given in the heading and include the U.S. application no. shown above (37 CFR 1.5)

VIRGINIA L IRBY
Telephone: (703) 308-9140 EXT 229

PART 3 - OFFICE COPY

FORM PCT/DO/EO/903 (371 Acceptance Notice)

UNITED STATES PATENT AND TRADEMARK OFFICE

UNITED STATES DEPARTMENT OF COMMERCE
United States Patent and Trademark Office
Address: COMMISSIONER FOR PATENTS
P.O. Box 1450
Alexandria, Virginia 22313-1450
www.uspto.gov

APPLICATION NUMBER	FILING OR 371(c) DATE	FIRST NAMED APPLICANT	ATTY. DOCKET NO./TITLE
11/576,882	04/06/2007	Do-Hyung Kim	3576-043

CONFIRMATION NO. 6820

20575
MARGER JOHNSON & MCCOLLOM, P.C.
210 SW MORRISON STREET, SUITE 400
PORTLAND, OR97204

Title: Side Illumination Lens and Luminescent Device Using the Same

Publication No. US-2007-0284993-A1
Publication Date: 12/13/2007

NOTICE OF PUBLICATION OF APPLICATION

The above-identified application will be electronically published as a patent application publication pursuant to 37 CFR 1.211, et seq. The patent application publication number and publication date are set forth above.

The publication may be accessed through the USPTO's publically available Searchable Databases via the Internet at www.uspto.gov. The direct link to access the publication is currently http://www.uspto.gov/patft/.

The publication process established by the Office does not provide for mailing a copy of the publication to applicant. A copy of the publication may be obtained from the Office upon payment of the appropriate fee set forth in 37 CFR 1.19(a)(1). Orders for copies of patent application publications are handled by the USPTO's Office of Public Records. The Office of Public Records can be reached by telephone at (703) 308-9726 or (800) 972-6382, by facsimile at (703) 305-8759, by mail addressed to the United States Patent and Trademark Office, Office of Public Records, Alexandria, VA 22313-1450 or via the Internet.

In addition, information on the status of the application, including the mailing date of Office actions and the dates of receipt of correspondence filed in the Office, may also be accessed via the Internet through the Patent Electronic Business Center at www.uspto.gov using the public side of the Patent Application Information and Retrieval (PAIR) system. The direct link to access this status information is currently http://pair.uspto.gov/. Prior to publication, such status information is confidential and may only be obtained by applicant using the private side of PAIR.

Further assistance in electronically accessing the publication, or about PAIR, is available by calling the Patent Electronic Business Center at 1-866-217-9197.

Pre-Grant Publication Division, 703-605-4283

Doc code :IDS
Doc description: Information Disclosure Statement (IDS) Filed

PTO/SB/08a (08-08)
Approved for use through 09/30/2008. OMB 0651-0031
U.S. Patent and Trademark Office; U.S. DEPARTMENT OF COMMERCE
Under the Paperwork Reduction Act of 1995, no persons are required to respond to a collection of information unless it contains a valid OMB control number.

INFORMATION DISCLOSURE STATEMENT BY APPLICANT (**Not for submission under 37 CFR 1.99)**	Application Number	11576882
	Filing Date	2007-04-06
	First Named Inventor	Do Hyung Kim
	Art Unit	2873
	Examiner Name	
	Attorney Docket Number	3576-043

U.S.PATENTS Remove

Examiner Initial*	Cite No	Patent Number	Kind Code[1]	Issue Date	Name of Patentee or Applicant of cited Document	Pages,Columns,Lines where Relevant Passages or Relevant Figures Appear
	1					

If you wish to add additional U.S. Patent citation information please click the Add button. Add

U.S.PATENT APPLICATION PUBLICATIONS Remove

Examiner Initial*	Cite No	Publication Number	Kind Code[1]	Publication Date	Name of Patentee or Applicant of cited Document	Pages,Columns,Lines where Relevant Passages or Relevant Figures Appear
	1					

If you wish to add additional U.S. Published Application citation information please click the Add button. Add

FOREIGN PATENT DOCUMENTS Remove

Examiner Initial*	Cite No	Foreign Document Number[3]	Country Code[2] ¡	Kind Code[4]	Publication Date	Name of Patentee or Applicant of cited Document	Pages,Columns,Lines where Relevant Passages or Relevant Figures Appear	T[5]
	1	2000150967	JP		2000-05-30	Carey et al.		☐
	2	2001185763	JP		2001-07-06	Uchihara et al.		☐
	3	2002252373	JP		2002-09-06	Nagai et al.		☐

INFORMATION DISCLOSURE STATEMENT BY APPLICANT (Not for submission under 37 CFR 1.99)	Application Number	11576882
	Filing Date	2007-04-06
	First Named Inventor	Do Hyung Kim
	Art Unit	2873
	Examiner Name	
	Attorney Docket Number	3576-043

If you wish to add additional Foreign Patent Document citation information please click the Add button Add

NON-PATENT LITERATURE DOCUMENTS Remove

Examiner Initials*	Cite No	Include name of the author (in CAPITAL LETTERS), title of the article (when appropriate), title of the item (book, magazine, journal, serial, symposium, catalog, etc), date, pages(s), volume-issue number(s), publisher, city and/or country where published.	T[5]
	1		☐

If you wish to add additional non-patent literature document citation information please click the Add button Add

EXAMINER SIGNATURE

Examiner Signature		Date Considered	

*EXAMINER: Initial if reference considered, whether or not citation is in conformance with MPEP 609. Draw line through a citation if not in conformance and not considered. Include copy of this form with next communication to applicant.

[1] See Kind Codes of USPTO Patent Documents at www.USPTO.GOV or MPEP 901.04. [2] Enter office that issued the document, by the two-letter code (WIPO Standard ST.3). [3] For Japanese patent documents, the indication of the year of the reign of the Emperor must precede the serial number of the patent document. [4] Kind of document by the appropriate symbols as indicated on the document under WIPO Standard ST.16 if possible. [5] Applicant is to place a check mark here if English language translation is attached.

INFORMATION DISCLOSURE STATEMENT BY APPLICANT (Not for submission under 37 CFR 1.99)	Application Number	11576882
	Filing Date	2007-04-06
	First Named Inventor	Do Hyung Kim
	Art Unit	2873
	Examiner Name	
	Attorney Docket Number	3576-043

CERTIFICATION STATEMENT

Please see 37 CFR 1.97 and 1.98 to make the appropriate selection(s):

☐ That each item of information contained in the information disclosure statement was first cited in any communication from a foreign patent office in a counterpart foreign application not more than three months prior to the filing of the information disclosure statement. See 37 CFR 1.97(e)(1).

OR

☐ That no item of information contained in the information disclosure statement was cited in a communication from a foreign patent office in a counterpart foreign application, and, to the knowledge of the person signing the certification after making reasonable inquiry, no item of information contained in the information disclosure statement was known to any individual designated in 37 CFR 1.56(c) more than three months prior to the filing of the information disclosure statement. See 37 CFR 1.97(e)(2).

☐ See attached certification statement.

☐ Fee set forth in 37 CFR 1.17 (p) has been submitted herewith.

☒ None

SIGNATURE

A signature of the applicant or representative is required in accordance with CFR 1.33, 10.18. Please see CFR 1.4(d) for the form of the signature.

Signature	/Alan T. McCollom/	Date (YYYY-MM-DD)	2008-08-29
Name/Print	Alan T. McCollom	Registration Number	28881

This collection of information is required by 37 CFR 1.97 and 1.98. The information is required to obtain or retain a benefit by the public which is to file (and by the USPTO to process) an application. Confidentiality is governed by 35 U.S.C. 122 and 37 CFR 1.14. This collection is estimated to take 1 hour to complete, including gathering, preparing and submitting the completed application form to the USPTO. Time will vary depending upon the individual case. Any comments on the amount of time you require to complete this form and/or suggestions for reducing this burden, should be sent to the Chief Information Officer, U.S. Patent and Trademark Office, U.S. Department of Commerce, P.O. Box 1450, Alexandria, VA 22313-1450. DO NOT SEND FEES OR COMPLETED FORMS TO THIS ADDRESS. **SEND TO: Commissioner for Patents, P.O. Box 1450, Alexandria, VA 22313-1450.**

Privacy Act Statement

The Privacy Act of 1974 (P.L. 93-579) requires that you be given certain information in connection with your submission of the attached form related to a patent application or patent. Accordingly, pursuant to the requirements of the Act, please be advised that: (1) the general authority for the collection of this information is 35 U.S.C. 2(b)(2); (2) furnishing of the information solicited is voluntary; and (3) the principal purpose for which the information is used by the U.S. Patent and Trademark Office is to process and/or examine your submission related to a patent application or patent. If you do not furnish the requested information, the U.S. Patent and Trademark Office may not be able to process and/or examine your submission, which may result in termination of proceedings or abandonment of the application or expiration of the patent.

The information provided by you in this form will be subject to the following routine uses:

1. The information on this form will be treated confidentially to the extent allowed under the Freedom of Information Act (5 U.S.C. 552) and the Privacy Act (5 U.S.C. 552a). Records from this system of records may be disclosed to the Department of Justice to determine whether the Freedom of Information Act requires disclosure of these record s.

2. A record from this system of records may be disclosed, as a routine use, in the course of presenting evidence to a court, magistrate, or administrative tribunal, including disclosures to opposing counsel in the course of settlement negotiations.

3. A record in this system of records may be disclosed, as a routine use, to a Member of Congress submitting a request involving an individual, to whom the record pertains, when the individual has requested assistance from the Member with respect to the subject matter of the record.

4. A record in this system of records may be disclosed, as a routine use, to a contractor of the Agency having need for the information in order to perform a contract. Recipients of information shall be required to comply with the requirements of the Privacy Act of 1974, as amended, pursuant to 5 U.S.C. 552a(m).

5. A record related to an International Application filed under the Patent Cooperation Treaty in this system of records may be disclosed, as a routine use, to the International Bureau of the World Intellectual Property Organization, pursuant to the Patent Cooperation Treaty.

6. A record in this system of records may be disclosed, as a routine use, to another federal agency for purposes of National Security review (35 U.S.C. 181) and for review pursuant to the Atomic Energy Act (42 U.S.C. 218(c)).

7. A record from this system of records may be disclosed, as a routine use, to the Administrator, General Services, or his/her designee, during an inspection of records conducted by GSA as part of that agency's responsibility to recommend improvements in records management practices and programs, under authority of 44 U.S.C. 2904 and 2906. Such disclosure shall be made in accordance with the GSA regulations governing inspection of records for this purpose, and any other relevant (i.e., GSA or Commerce) directive. Such disclosure shall not be used to make determinations about individuals.

8. A record from this system of records may be disclosed, as a routine use, to the public after either publication of the application pursuant to 35 U.S.C. 122(b) or issuance of a patent pursuant to 35 U.S.C. 151. Further, a record may be disclosed, subject to the limitations of 37 CFR 1.14, as a routine use, to the public if the record was filed in an application which became abandoned or in which the proceedings were terminated and which application is referenced by either a published application, an application open to public inspections or an issued patent.

9. A record from this system of records may be disclosed, as a routine use, to a Federal, State, or local law enforcement agency, if the USPTO becomes aware of a violation or potential violation of law or regulation.

SURFACE-MOUNTABLE LED PACKAGE

Publication number: JP2000150967
Publication date: 2000-05-30
Inventor: CAREY JULIAN A; COLLINS III WILLIAM D; LOH FAN PON; SASSER GARY D
Applicant: AGILENT TECHNOLOGIES INC
Classification:
- International: H01L33/00; H01L33/00; (IPC1-7): H01L33/00
- European: H01L33/0085; H01L33/0066C2; H01L33/0087
Application number: JP19990303910 19991026
Priority number(s): US19980187547 19981105

Also published as:
- US6274924 (B1)
- GB2343548 (A)
- DE19945675 (A1)

Report a data error here

Abstract of **JP2000150967**

PROBLEM TO BE SOLVED: To enable an LED package to optically highly efficiently operate by arranging slag composed of a heat-conductive material on the pedestal of a cavity and, at the same time, a lens in a lead frame opposite to the cavity. SOLUTION: An LED(light emitting diode) die 16 is directly or indirectly mounted on slag 10 which becomes a heat sink through a high heat-conductivity auxiliary pedestal 18. Then bonding wires are extended from the LED die 16 and auxiliary pedestal 18 until the wires reach the metallic leads of a lead frame 12 insert-molding the slag 10 in a state where the lead frame 12 is electrically and thermally isolated from the slag 10 and inserted into the lead frame 12. In addition, a lens 20 which makes optical activity is arranged in the lead frame 12 opposite to a cavity. Therefore, an LED can optically highly efficiently operate.

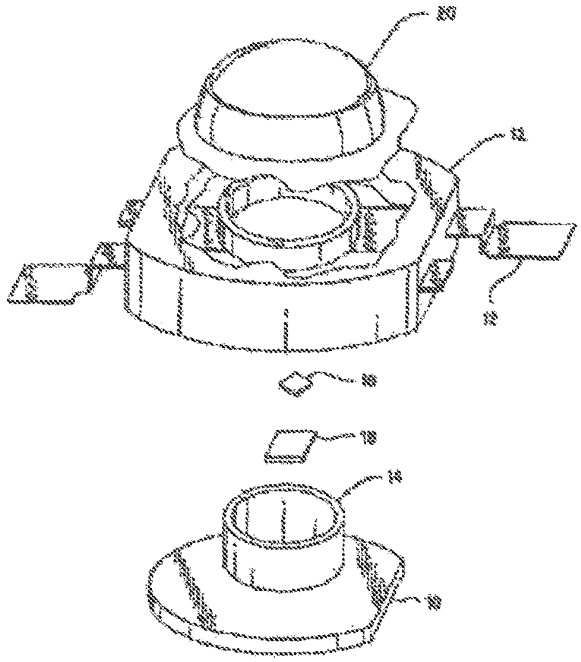

Data supplied from the *esp@cenet* database - Worldwide

(19)日本国特許庁（ＪＰ）　(12) 公開特許公報（Ａ）　(11)特許出願公開番号
特開2000－150967
（P2000－150967A）
(43)公開日　平成12年5月30日(2000.5.30)

(51)Int.Cl.⁷	識別記号	ＦＩ	テーマコード（参考）
Ｈ０１Ｌ　33/00		Ｈ０１Ｌ　33/00	Ｎ

審査請求　未請求　請求項の数19　ＯＬ　（全 5 頁）

(21)出願番号　特願平11－303910
(22)出願日　平成11年10月26日(1999.10.26)
(31)優先権主張番号　１８７５４７
(32)優先日　平成10年11月5日(1998.11.5)
(33)優先権主張国　米国（ＵＳ）

(71)出願人　399117121
アジレント・テクノロジーズ・インク
ＡＧＩＬＥＮＴ　ＴＥＣＨＮＯＬＯＧＩＥＳ，　ＩＮＣ．
アメリカ合衆国カリフォルニア州パロアルト　ページ・ミル・ロード　395
(72)発明者　ジュリアン・エー・カレイ
アメリカ合衆国カリフォルニア州サニーヴェイル　イースト　レミントン　ドライブ　575　アパートメント　6エー
(74)代理人　100105913
弁理士　加藤　公久

最終頁に続く

(54)【発明の名称】　表面実装可能なＬＥＤパッケージ

(57)【要約】
【課題】信頼性が高く、発光効率の高い動作が実現できるＬＥＤパッケージを提供する。
【解決手段】ＬＥＤダイ１６は、副基台１８を介してスラグ１０に支持される。スラグ１０及び副基台１８は熱伝導性が良好なので、ＬＥＤダイ１６の動作による熱が効果的に拡散される。従って、ＬＥＤダイ１６は熱による特性劣化を生じにくい。

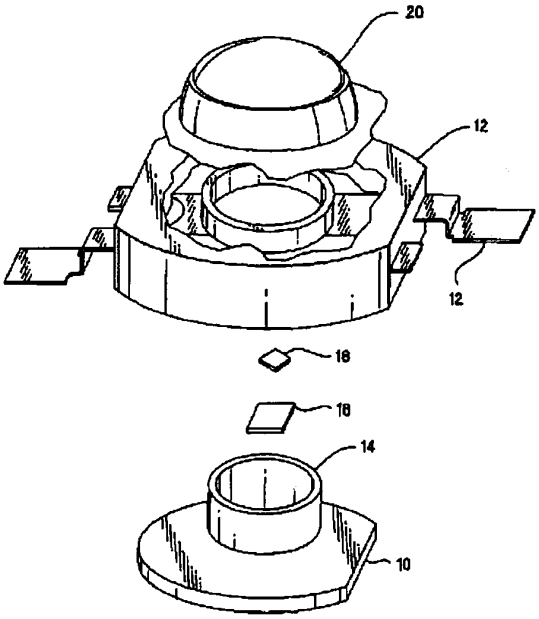

【特許請求の範囲】

【請求項１】キャビティを有し、構造的一体性を与えるよう作用するリードフレーム、

前記キャビティの基台に配置された、熱伝導性材料からなるスラグ、及び前記リードフレームの内部で前記キャビティに対向して配置され、光学的機能を提供するレンズを備えることを特徴とするＬＥＤダイ用のパッケージ。

【請求項２】前記スラグに結合された、熱伝導性材料から成る副基台を更に備えることを特徴とする請求項１に記載のパッケージ。

【請求項３】前記副基台のための前記熱伝導性材料は、銀、銅、ダイアモンド、シリコン、アルミニウム、タングステン、モリブデン、及びベリリウムの純粋材料、化合物、及び複合物から成る群から選択される材料を含むことを特徴とする請求項２に記載のパッケージ。

【請求項４】前記スラグのための前記熱伝導性材料は、銀、銅、ダイアモンド、シリコン、アルミニウム、タングステン、モリブデン、及びベリリウムの純粋材料、化合物、及び複合物から成る群から選択される材料を含むことを特徴とする請求項１に記載のパッケージ。

【請求項５】前記スラグに熱的に結合されるＬＥＤダイ、及びショア１０Ａより小さい硬度を有し、前記ＬＥＤダイをカプセル封入する光学的に透明な材料を更に備えることを特徴とする請求項１に記載のパッケージ。

【請求項６】前記スラグに熱的に結合されるＬＥＤダイ、及び少なくともショア５０Ｄの硬度を有する光学的に透明なカプセル材を更に備えることを特徴とする請求項１に記載のパッケージ。

【請求項７】前記ＬＥＤダイと前記スラグとの間に結合された、熱伝導性材料から成る副基台を備えることを特徴とする請求項５に記載のパッケージ。

【請求項８】前記副基台のための熱伝導性材料は、銀、銅、ダイアモンド、シリコン、アルミニウム、タングステン、モリブデン、及びベリリウムの純粋材料、化合物、及び複合物から成る群から選択されることを特徴とする請求項７に記載のパッケージ。

【請求項９】前記スラグのための熱伝導性材料は、銀、銅、ダイアモンド、シリコン、アルミニウム、タングステン、モリブデン、及びベリリウムの純粋材料、化合物、及び複合物から成る群から選択されることを特徴とする請求項５に記載のパッケージ。

【請求項１０】反射面を有し、前記スラグの近くに配置された、反射カップを備えることを特徴とする請求項５に記載のパッケージ。

【請求項１１】前記反射カップは、前記リードフレームに組み込まれていることを特徴とする請求項１０に記載のパッケージ。

【請求項１２】前記反射カップは、銀、アルミニウム、金、誘電体被覆された銀、誘電体被覆された金、及び誘電体被覆されたアルミニウムから成る群から選択される材料を含むことを特徴とする請求項１１に記載のパッケージ。

【請求項１３】前記反射カップの反射面は、銀、アルミニウム、金、誘電体被覆された銀、誘電体被覆された金、及び誘電体被覆されたアルミニウムから成る群から選択される材料を含むことを特徴とする請求項１２に記載のパッケージ。

【請求項１４】前記反射面は、０．３より大きな屈折率の階段状変化によって形成される少なくとも一つの内部全反射面を備えることを特徴とする請求項１２に記載のパッケージ。

【請求項１５】反射面を有し、前記スラグの近くに配置された、反射カップを更に備えることを特徴とする請求項１に記載のパッケージ。

【請求項１６】前記反射カップは、前記リードフレームに組み込まれていることを特徴とする請求項１５に記載のパッケージ。

【請求項１７】前記反射カップは、銀、アルミニウム、金、誘電体被覆された銀、誘電体被覆された金、及び誘電体被覆されたアルミニウムから成る群から選択される材料を含むことを特徴とする請求項１６に記載のパッケージ。

【請求項１８】前記反射面は、銀、アルミニウム、金、誘電体被覆された銀、誘電体被覆された金、及び誘電体被覆されたアルミニウムから成る群から選択される材料を含むことを特徴とする請求項１７に記載のパッケージ。

【請求項１９】反射面は０．３より大きな屈折率の階段状変化により形成される少なくとも一つの内部全反射面を備えることを特徴とする請求項１７に記載のパッケージ。

【発明の詳細な説明】

【０００１】

【発明の属する技術分野】本発明は、発光ダイオードのパッケージ化に関し、特に表面実装に好適な構造を含むパッケージに関する。

【０００２】

【従来の技術】多くの発光ダイオード（ＬＥＤ）はコヒーレントでない光を発光する。ＬＥＤの性能の一つの尺度は、例えば入力エネルギーの可視光への変換等の光度測定から導かれるような発光効率である。発光効率は、ＬＥＤの接合部の温度に反比例する。ＬＥＤパッケージの設計者の主要関心事は、ＬＥＤダイを比較的低い温度に維持して全体の性能を改善することである。

【０００３】例えば、消費電力が２００ｍＷ以下であるか又は面積の小さいＬＥＤダイによる低消費電力のＬＥＤでは、光学キャビティの寸法が大きいために所望の信頼性条件に合致しない。キャビティ寸法が最適値より小さいと、光抽出効率、即ち装置からの発光量が減少す

る。従来技術のパッケージ、例えばＴ１-3/4及びスナップＬＥＤは、硬いカプセル材として成形エポキシ材料を使用している。成形エポキシ材料は、光学的及び構造的に有効である。ＬＥＤパッケージの従来技術による装置を図１に示す。ＬＥＤダイは光学キャビティの基台上に載置される。硬いカプセル材、例えば、剛性を有する未充填エポキシ材料が光学キャビティを埋めている。ＬＥＤダイ、光学キャビティ、及びカプセル材の熱膨張係数は互いに異なるので、動作中にそれらは異なる割合で膨張し収縮する。このためＬＥＤに対して比較的大きな機械的応力が加わる。加えて、従来技術のパッケージは、電気導線が主な熱伝導経路であるため熱伝導経路と電気経路との間で熱的経路が分離されていない。その結果、パッケージ化されたＬＥＤダイは、特に最終製品への組立の工程で温度サイクルによる熱的応力を受けやすい。

【０００４】これらの問題は、ダイの面積又は入力側電力が増大するにつれて更に悪化する。接合面積が大きい（例えば、０．２５mm²より大きい）ＬＥＤダイは、同等の光抽出効率を与えるのに、接合面積が小さい（例えば、０．２５mm²より小さい）ＬＥＤダイより、大きな光学素子部品を必要とするので、必要とされる光学キャビティも大きくなる。ＬＥＤに加わる機械的応力は、カプセル材の体積と共に増大する。加えて、応力はパッケージ化されたＬＥＤが温度サイクル及び高湿度状態にさらされるにつれて増大する。機械的応力が蓄積するとＬＥＤの全体としての信頼性が低下する。

【０００５】従来技術のパッケージは主要熱伝導経路としてそれらの電気導線を使用しているから、これらの経路は熱伝導に対して高い抵抗を有し、電力消費が増大（例えば、２００mW以上）するとき、外部装置の高い熱伝導抵抗の影響を受けてその接合温度が高くなってしまう。高い接合温度は、ＬＥＤチップの発光効率の不可逆的劣化を加速する原因となり、またＬＥＤパッケージの機械的一体性を損なう原因となるプロセスを加速する。

【０００６】

【発明が解決しようとする課題】特に高い（３５％）デューティ係数で又は長いパルス幅（１秒より長い）で動作するとき、ＬＥＤ平均入力側電力が０．２W程度で、信頼性が高く、光学的に高い効率の動作が実現できるＬＥＤパッケージは存在しない。本発明はこのようなＬＥＤパッケージを提供することを目的としている。

【０００７】

【課題を解決するための手段】本発明は、光学的機能と構造的機能とが別々になっているＬＥＤパッケージを提供する。ヒートシンクとなるスラグがインサートモールドされたリードフレームに挿入される。インサートモールドされたリードフレームは、構造的一体性を与えるように打ち抜きによりパターン形成された金属部品を埋め込みプラスチック材料によってオーバーモールドして構成している。スラグは、随意選択の反射カップを備えることができる。ＬＥＤダイは、電気絶縁性を有し且つ良好な熱伝導性を有する副基台を介して直接的又は間接的にスラグに取り付けられている。ボンディングワイヤは、ＬＥＤから延びてスラグに対して電気的及び熱的に分離された金属リードまで延長される。光学レンズは、熱可塑性材料によって予備成形された光学的に透明なレンズ及び柔らかい光学的に透明なカプセル材を取付けることにより、又はＬＥＤを覆うように光学的に透明なエポキシ材料を成形することにより、又は柔らかい光学的に透明なカプセル材の上に光学的に透明のエポキシを成形することにより製造可能である。柔らかい光学的に透明なカプセル材は、ＬＥＤダイに与える応力を小さくでき又は衝撃吸収を提供できるような柔らかい材料である。

【０００８】

【発明の実施の形態】図２は、本発明によるＬＥＤパッケージ、即ち光学的機能及び構造的機能を分離したＬＥＤパッケージの一実施形態を示す。ヒートシンクとなるスラグ１０はインサートモールドされたリードフレーム１２に挿入される。インサートモールドされたリードフレーム１２は、電気的パスを与える金属フレームの周りに成形された埋め込みプラスチック材料を有する。スラグ１０は、随意選択の反射カップ１４を備えることができる。発光ダイオード（ＬＥＤ）ダイ１６は熱伝導性の良好な副基台１８を介して、直接的に又は間接的に、スラグ１０に取付けられている。ボンディングワイヤがＬＥＤ１６及び副基台１８から延び、スラグ１０に対して電気的に且つ熱的に分離されたリードフレーム１２の金属リードまで達する。熱可塑性材料によって予備成形されるレンズ及びカプセル材（図示せず）を取付けることにより、又はＬＥＤを覆うようにエポキシ材を成形することにより、又はカプセル材（図示せず）の上にエポキシ材によるレンズを成形することにより、光学レンズ２０を付加することができる。カプセル材は、好適にはＬＥＤダイに加わる応力を小さくできるか又は衝撃吸収を与えることのできる柔らかい材料である。ＬＥＤダイは、ヒートシンクとなるスラグに熱的に結合しているので、ダイは従来のパッケージより低い接合温度に維持され得る。動作温度が低くなれば、ダイは大きな熱応力を受けないので、大電力動作によっても信頼性及び良好な特性を維持できる。

【０００９】ヒートシンクとなるスラグ１０は、リードフレーム１２から熱的に分離される。絶縁体から成る副基台１８を使用すれば、スラグ１０は電気的に絶縁され、従って、スラグ１０は最小の熱抵抗で外部ヒートシンク（図示せず）に結合されるのでパッケージ内の熱の蓄積を防止することができる。体積の大きなスラグ１０は、ＬＥＤダイ１６から遠くに熱を伝導させるための熱抵抗の小さなパスを提供する。好適実施形態では銅のス

ラグを使用しているが、他の適切な材料にはダイヤモンド、シリコン、アルミニウム、モリブデン、窒化アルミニウム、酸化アルミニウム、又はそれらの複合物及び合金等がある。更に、モリブデン・銅及びタングステン・銅の複合物も使用可能である。

【００１０】副基台１８は、スラグ材料とＬＥＤダイとの間の熱伝導経路及び熱膨張の緩衝（バッファ）としても機能する。好ましくは、副基台１８はＬＥＤダイと同等の熱膨張係数を備える。副基台１８は導電性又は絶縁性のいずれの材料であっても良い。

【００１１】インサートモールドされたリードフレーム１２は、打ち抜き加工されてパターン形成された金属部品であり、高い導電率を与えるがその熱伝導率は低い。リードフレーム１２は低い熱伝導率及び電気的絶縁性を与えるプラスチック構造部品によりオーバーモールドされ得る。リードフレームの絶縁部分は構造的一体性を与える埋込みプラスチック材料である。強度の大きなプラスチック本体は、パッケージの構造的一体性を与え、ジュロ硬度がショア約５０乃至９０Ｄである。光学的及び構造的機能を分離することによりパッケージがその構造的一体性を犠牲にせずに光学的特性を維持することができる。

【００１２】カプセル材は、屈折率が１．３より大きな柔らかい光学的に透明な材料、例えば、シリコーン、液状又はゼラチン質の光学化合物材料であり、ＬＥＤダイ１６と光学レンズ２０との間の光路を埋める。柔らかい光学的に透明な材料は、ＬＥＤダイ１６を保護する。柔らかいカプセル材のジュロ硬度はショア１０Ａより小さい。

【００１３】随意選択の反射カップ１４は、反射率を上げるためにめっきされる熱伝導性の良好な材料から作られている。随意選択の反射カップ１４は反射率を高めるために被覆してある熱伝導性の良好な材料から作ることができる。反射カップの光学面が構成できる適切な熱伝導材料は、スラグ１０と同様に、銀、銅、アルミニウム、モリブデン、ダイアモンド、シリコン、アルミナ、窒化アルミニウム、酸化アルミニウム、及びそれらの複合物がある。スラグ１０と異なり、反射カップの壁は、熱的絶縁材料、例えば、反射被膜付きプラスチック材料から製造可能である。他の場合には、壁は、外部の光学表面がチップから表面への光線の入射角及び表面における高い屈折率から低い屈折率への階段状変化のために生じる内部全反射（ＴＩＲ）によって反射面を与えるように配置された、光学プラスチックレンズシェルの被覆されない表面で形成してもよい。屈折率の階段状変化は０．３以上とされる。

【００１４】多数の好適実施形態においてカップは銀で被覆される。しかしながら、アルミニウム、金、プラチナ、及びアルミニウム、銀、金、又は純粋な誘電体のスタック構造のような他の反射材料被膜を使用してもよい。

【００１５】本発明を上記の実施形態に沿って説明すると、本発明は、キャビティを有し、構造的一体性を与えるよう作用するリードフレーム（１２）、前記キャビティの基台に配置された、熱伝導性材料からなるスラグ（１０）、前記リードフレーム（１２）の内部で前記キャビティに対向して配置され、光学的機能を提供するレンズ（２０）を備えることを特徴とするＬＥＤダイ用のパッケージを提供する。

【００１６】好ましくは、スラグ（１０）に結合された、熱伝導性材料から成る副基台（１８）を更に備える。

【００１７】好ましくは、副基台（１８）のための熱伝導性材料は、銀、銅、ダイアモンド、シリコン、アルミニウム、タングステン、モリブデン、及びベリリウムの純粋材料、化合物、及び複合物から成る群から選択される。

【００１８】好ましくは、スラグ（１０）のための熱伝導性材料は、銀、銅、ダイアモンド、シリコン、アルミニウム、タングステン、モリブデン、及びベリリウムの純粋材料、化合物、及び複合物から成る群から選択される。

【００１９】好ましくは、スラグ（１０）に熱的に結合されるＬＥＤダイ（１６）、及びショア１０Ａより小さい硬度を有し、ＬＥＤダイをカプセル封入する光学的に透明な材料を更に備える。

【００２０】好ましくは、スラグ（１０）に熱的に結合されるＬＥＤダイ（１６）、及び少なくともショア５０Ｄの硬度を有する光学的に透明なカプセル材を更に備える。

【００２１】好ましくは、ＬＥＤダイ（１６）とスラグ（１０）との間に結合された、熱伝導性の副基台（１８）を備える。

【００２２】好ましくは、反射面を有し、スラグ（１０）の近くに配置された、反射カップ（１４）を備える。

【００２３】好ましくは、反射カップは、リードフレームに組み込まれている。

【００２４】好ましくは、反射カップ（１４）は、銀、アルミニウム、金、誘電体被覆された銀、誘電体被覆された金、及び誘電体被覆されたアルミニウムから成る群から選択される材料を含む。

【００２５】好ましくは、反射カップの反射面は、銀、アルミニウム、金、誘電体被覆された銀、誘電体被覆された金、及び誘電体被覆されたアルミニウムから成る群から選択される材料を含む。

【００２６】好ましくは、反射面は、０．３より大きな屈折率の階段状変化によって形成される少なくとも一つの内部全反射面を備える。

【００２７】好ましくは、反射面を有し、スラグの近く

に配置された、反射カップ（１４）を更に備える。

【００２８】本実施形態で示したＬＥＤパッケージは、あくまでも例示的なものであり、本発明を制限するものではなく、当業者によって更に様々な変形、変更が可能である。

【図面の簡単な説明】

【図１】従来技術のＬＥＤパッケージを示す頂側及び側方から見た断面図である。

【図２】本発明のＬＥＤパッケージの一実施形態を示す＊＊斜視図である。

【符号の説明】

１０　スラグ
１２　リードフレーム
１４　反射カップ
１６　ＬＥＤダイ
１８　副基台
２０　レンズ

【図１】

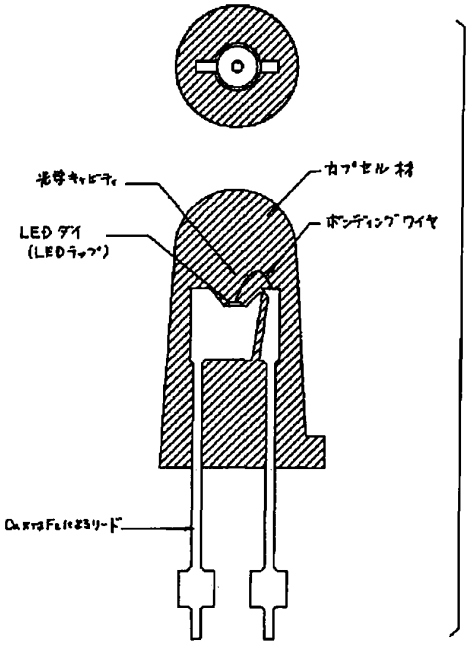

【図２】

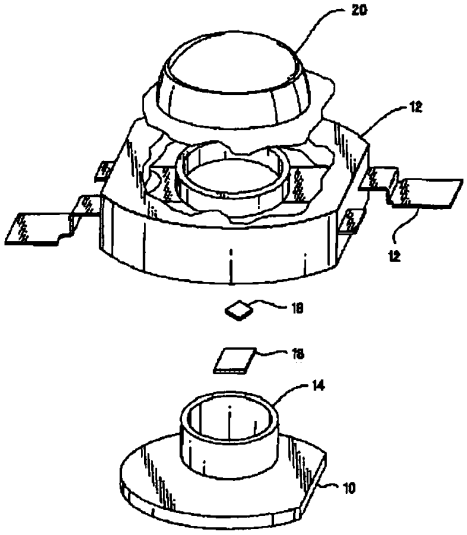

フロントページの続き

(71)出願人　399117121
395 Page Mill Road Palo Alto, California U. S. A.

(72)発明者　ウィリアム・ディー・コリンズ，サード
アメリカ合衆国カリフォルニア州サンノゼ　ケイリーン　ドライブ　3435

(72)発明者　バン・ボー・ロー
アメリカ合衆国カリフォルニア州サンノゼ　ケイブ　タウン　プレイス　823

(72)発明者　ゲイリー・ディー・ササー
アメリカ合衆国カリフォルニア州サンノゼ　マクダニエル　アベニュー　1510

OPTICAL SEMICONDUCTOR PACKAGE

Publication number: JP2001185763

Publication date: 2001-07-06

Inventor: UCHIHARA TSUKASA; TAMURA HIDEO; SUGIZAKI MASAYUKI

Applicant: TOSHIBA ELECTRONIC ENG; TOKYO SHIBAURA ELECTRIC CO

Classification:

- International: H01L33/00; H01L23/28; H01L23/48; (IPC1-7): H01L33/00; H01L23/28; H01L23/48; (IPC1-7): H01L33/00; H01L23/28

- European:

Application number: JP19990369374 19991227

Priority number(s): JP19990369374 19991227

Report a data error here

Abstract of **JP2001185763**

PROBLEM TO BE SOLVED: To provide an optical semiconductor package of a lead frame type which realizes low thermal resistance. SOLUTION: This optical semiconductor package 1 is provided with a lead frame 13, a translucent member 16 and a light shielding resin molded member 14. The lead frame 13 consists of a metal segment 11 which mounts an optical semiconductor element 22 on a mounting region of a main surface and is electrically connected with the optical semiconductor element 22 through conductive adhesive agent 24, and a metal segment 12 electrically connected with the optical semiconductor element 22 through a metal wire 26. The light transmitting member 16 is formed of translucent resin and arranged so as to cover the optical semiconductor element 22. The light shielding resin molded member 14 is formed of light shielding resin, and has a bottom part retaining an inner lead part of the lead frame 13 and a side part retaining the translucent member 16. In the metal segment 12, a back region corresponding to the mounting region mounting the optical semiconductor element 22 is exposed outside penetrating a bottom part of the light shielding resin molded member 14 and made a first heat dissipating region.

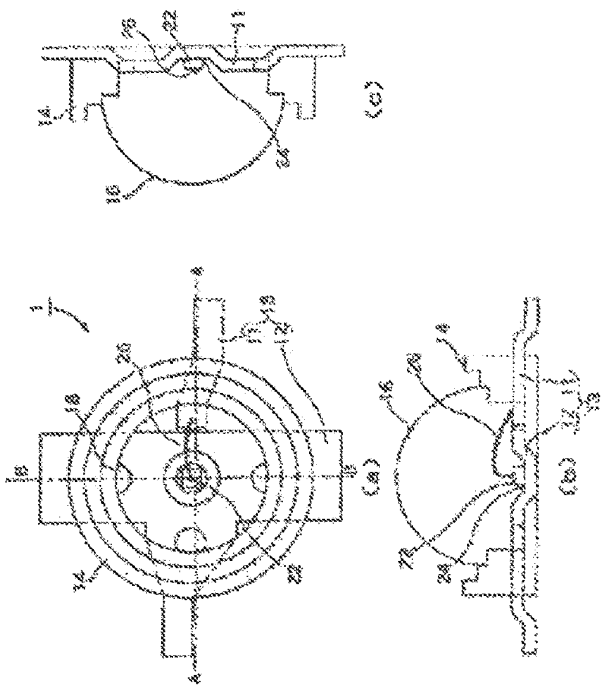

Data supplied from the *esp@cenet* database - Worldwide

(19)日本国特許庁（ＪＰ）　(12) 公開特許公報（Ａ）　(11)特許出願公開番号
特開2001－185763
（P2001－185763A）
(43)公開日　平成13年7月6日(2001.7.6)

(51)Int.Cl.⁷	識別記号	ＦＩ	テーマコード（参考）
Ｈ０１Ｌ　33/00		Ｈ０１Ｌ　33/00	Ｎ　４Ｍ１０９
23/28		23/28	Ｄ　５Ｆ０４１
23/48		23/48	Ｙ

審査請求　未請求　請求項の数７　ＯＬ　（全 ７ 頁）

(21)出願番号　特願平11－369374

(22)出願日　平成11年12月27日(1999.12.27)

(71)出願人　000221339
東芝電子エンジニアリング株式会社
神奈川県横浜市磯子区新杉田町８番地

(71)出願人　000003078
株式会社東芝
神奈川県川崎市幸区堀川町72番地

(72)発明者　内　原　士
神奈川県川崎市幸区小向東芝町１番地　株式会社東芝マイクロエレクトロニクスセンター内

(74)代理人　100064285
弁理士　佐藤　一雄　（外３名）

最終頁に続く

(54)【発明の名称】　光半導体パッケージ

(57)【要約】
【課題】　低熱抵抗を実現するリードフレームタイプの光半導体パッケージを提供する。
【解決手段】　主面の実装領域に光半導体素子２２を載置するとともに導電性接着剤２４により光半導体素子２２と電気的に接続された金属片１１と、金属ワイヤ２６により光半導体素子２２と電気的に接続された金属片１２でなるリードフレーム１３と、透光性樹脂により形成され、光半導体素子２２を覆うように配設された透光性部材１６と、遮光性樹脂により形成され、リードフレーム１３のインナーリード部を支持する底部と透光性部材１６を支持する側部とを有する遮光性樹脂成型体１４とを備えた光半導体パッケージ１において、金属片１２について、光半導体素子２２を搭載する実装領域に対応する裏面領域を遮光性樹脂成型体１４の底部を貫通して外部に露出させて第１の放熱領域とする。

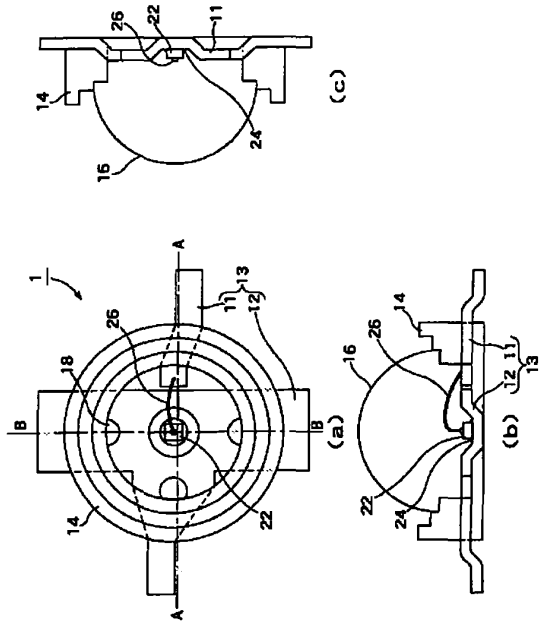

1

【特許請求の範囲】

【請求項１】光半導体素子と、

前記光半導体素子を主面に実装するリードフレームと、

透光性樹脂により成型され、前記光半導体素子を覆うように配設された第１の樹脂成型体と、

遮光性樹脂により成型され、前記リードフレームのインナーリード部を支持する底部と、前記第１の樹脂成型体を支持する側部とを有する第２の樹脂成型体と、を備え、

前記リードフレームは、前記主面に対向する裏面のうち前記光半導体素子の実装領域に対応する領域が前記第２の樹脂成型体の底部を貫通して外部に露出するように形成されて第１の放熱領域をなし、アウタリード部が第２の放熱領域をなす光半導体パッケージ。

【請求項２】前記リードフレームは、

前記光半導体素子を搭載するとともにこの光半導体素子の第１の端子と接続された第１の金属部と、

前記光半導体素子の第２の端子と金属ワイヤにより接続された第２の金属部と、を有し、

前記第１の金属部は、前記実装領域から互いに異なる方向で外部へ延在するように形成され、そのアウタリード部が複数の前記第２の放熱領域をなすことを特徴とする請求項１に記載の光半導体パッケージ。

【請求項３】前記第１の金属部は、主面に前記光半導体素子を搭載し底面が前記第１の樹脂成型体の底面から突出するように配設される金属ブロックを含むことを特徴とする請求項１に記載の光半導体パッケージ。

【請求項４】前記第１の樹脂成型体は、前記光半導体素子の光軸上で光学指向性が得られるレンズ形状で予め成型され、前記透光性樹脂により前記光半導体素子を覆って形成される第３の樹脂成型体を介して前記リードフレームおよび前記第２の樹脂成型体に固着されることを特徴とする請求項１ないし３のいずれかに記載の光半導体パッケージ。

【請求項５】前記第１の樹脂成型体は、前記透光性樹脂により前記光半導体素子の光軸上で光学指向性が得られるレンズ形状をなすように鋳型を用いて成型されることを特徴とする請求項１ないし３のいずれかに記載の光半導体パッケージ。

【請求項６】前記リードフレームは、

インナーリード部に形成され、側面が中心に向うにつれて低くなって光を反射させる傾斜面をなし、底面が前記実装領域となる凹部を有することを特徴とする請求項１ないし５のいずれかに記載の光半導体パッケージ。

【請求項７】前記第２の樹脂成型体は、前記第１の樹脂成型体との接合面において光を反射させる傾斜面を側部に有することを特徴とする請求項１ないし６のいずれかに記載の光半導体パッケージ。

【発明の詳細な説明】

【０００１】

2

【発明の属する技術分野】本発明は、光半導体パッケージに関し、特に、低熱抵抗を実現する光半導体パッケージの構造に関する。

【０００２】

【従来の技術】従来の技術による光半導体パッケージについて図面を参照しながら説明する。

【０００３】図３（ａ）は、従来の光半導体パッケージの一例を示す正面図であり、また、同図（ｂ）は、（ａ）における破線内の領域の拡大図である。

【０００４】同図に示す光半導体パッケージ５０は、２つの金属片５１，５２でなるリードフレーム５３と、導電性接着剤５４を介してリードフレーム５３上に固着された光半導体素子２２と、樹脂封止体５６とを備える。

【０００５】光半導体素子２２は、図３（ｂ）に示すように、カソードが導電性接着剤５４によりリードフレームの金属片５１に電気的に接続され、また、アノードが金属ワイヤ２６を介してリードフレーム５３の金属片５２に電気的に接続されている。

【０００６】図３に示すような従来の光半導体パッケージにおいて、通電により入力電流に比例して光半導体素子２２が発熱する。発生した熱は、導電性接着剤５４に伝導した後リードフレーム５３に伝導し、その後外気に放出される。熱の一部は、封止樹脂５６を経由して外気に放出されるが、リードフレーム５３は、一般に熱伝導性が非常に良好な金属で形成されるため、大部分の熱は、リードフレーム５３を通じて放出される。

【０００７】光半導体素子の特性は、熱による温度上昇で劣化し、この結果、光の取出し効率が低下する。従来、放熱性を向上させ、パッケージの熱抵抗を低減してこのような問題に対処するため、リードフレームタイプのパッケージについては、以下の方法が採用されてきた。

【０００８】即ち、第１の方法としてリードフレームの幅を太くする方法や、第２の方法として導電性接着剤について熱伝導性が良好なものを選択する方法、第３の方法としてパッケージ全体の容量を増加させる方法、などが用いられた。

【０００９】また、リードフレームタイプではなく、パッケージの熱抵抗が低いステムタイプなどを用いる場合もあった。

【００１０】

【発明が解決しようとする課題】しかしながら、半導体素子は、一般的に、より一層の軽薄短小化が求められている。この一方、上述した第１および第３の方法によれば、パッケージの容積が大きくなってしまう。第２の方法によれば、パッケージの容積に影響を与えることはないが、大幅な効果は期待できない。また、ステムタイプのパッケージでは、部品の単価が高いことに加え、多数の部品を組立てなければならないため、大量生産には不向きである。

【００１１】本発明は上記事情に鑑みてなされたものであり、その目的は、低熱抵抗を実現するリードフレームタイプの光半導体パッケージを提供することにある。

【００１２】

【課題を解決するための手段】本発明は、以下の手段により上記課題の解決を図る。

【００１３】即ち、本発明によれば、光半導体素子と、金属により形成されこの光半導体素子を主面に実装するリードフレームと、透光性樹脂により形成され上記光半導体素子を覆うように配設される第１の樹脂成型体と、遮光性樹脂により形成され上記リードフレームのインナーリード部を支持する底部と上記第１の樹脂成型体を支持する側部とを有する第２の樹脂成型体と、を備え、上記リードフレームは、上記主面に対向する裏面のうち上記光半導体素子の実装領域に対応する領域が上記第２の樹脂成型体の底部を貫通して外部に露出するように形成されて第１の放熱領域をなし、アウタリード部が第２の放熱領域をなす光半導体パッケージが提供される。

【００１４】上記リードフレームの裏面のうち、光半導体素子の実装領域に対応する領域が上記第２の樹脂成型体の底部を貫通して外部に露出する第１の放熱領域をなすので、上記リードフレームのアウタリード部と上記第１の樹脂成型体の表面領域に加え、光半導体素子で発生した熱を熱源に最も近い領域から外部に放出することができる。これにより、熱抵抗が大幅に低い光半導体パッケージが提供される。

【００１５】また、上記第１の樹脂成型体と上記第２の樹脂成型体は、ともに樹脂により形成されるので、相互の固着面は、優れた密着性を有する。これにより、外部からの水分や不純物の進入を確実に防止することができる。

【００１６】上記リードフレームは、上記光半導体素子を搭載するとともにこの光半導体素子の第１の端子と接続された第１の金属部と、上記光半導体素子の第２の端子と金属ワイヤにより接続された第２の金属部と、を有し、上記第１の金属部は、上記実装領域から互いに異なる方向で外部へ延在するように形成され、そのアウタリード部が複数の上記第２の放熱領域をなすと良い。

【００１７】上記第１の金属片のアウタリード部が複数の上記第２の放熱領域をなすので、上記第２の放熱領域の表面積が大きくなる。この結果、上記実装領域で発生しインナーリード部を介して伝導する熱が効率良く外部へ放出される。これにより、熱抵抗がさらに低減することができる。

【００１８】また、上記第１の金属部は、主面に上記光半導体素子を搭載し底面が上記第１の樹脂成型体の底面から突出するように配設される金属ブロックを含むものでも良い。

【００１９】上記金属ブロックの底面が上記第１の樹脂成型体の底面から突出するので、光半導体素子で発生した熱をさらに効率よく放出できるとともに、パッケージを基板に実装した場合に、上記金属ブロックの底面以外の領域と基板との間に間隙が形成される。これにより、この間隙内の空間を介して熱がさらに高効率で放出される。

【００２０】上記第１の樹脂成型体は、上記光半導体素子の光軸上で光学指向性が得られるレンズ形状で予め形成され、上記透光性樹脂により上記光半導体素子を覆って形成される第３の樹脂成型体を介して上記リードフレームおよび上記第２の樹脂成型体に固着されることが好ましい。

【００２１】また、上記第１の樹脂成型体は、上記透光性樹脂により上記光半導体素子の光軸上で光学指向性が得られるレンズ形状をなすように鋳型を用いて一体的に形成されるものでも良い。

【００２２】上記リードフレームは、インナーリード部に形成されその側面が中心に向うにつれて低くなって光を反射させる傾斜面をなしその底面が上記実装領域となる凹部を有することが望ましい。これにより、上記光半導体素子の光軸から外れた光を反射させて光軸と平行な軌道を通過させることができる。

【００２３】また、上記第２の樹脂成型体についても、上記第１の樹脂成型体との接合面において光を反射させる傾斜面を側部に有することが望ましい。これによっても、上記光半導体素子の光軸から外れ、上記第１または第２のの樹脂成型体を経由して到達した光を反射させて光軸と平行な軌道を通過させることができる。

【００２４】

【発明の実施の形態】以下、本発明の実施の形態のいくつかについて図面を参照しながら説明する。なお、以下の図面において図３と同一の部分には同一の参照番号を付してその説明を適宜省略する。

【００２５】（１）第１の実施の形態

まず、本発明にかかる光半導体パッケージの第１の実施の形態について図１を参照しながら説明する。同図に示すように、本実施形態の特徴は、光半導体素子により発生した熱を水平方向と底面方向に放出するリードフレーム１３と、このリードフレーム１３を保持するとともに透光性部材１６を支持する遮光性樹脂成型体１４とを備える点にある。

【００２６】図１は、本実施形態の光半導体パッケージ１を示す説明図であり、（ａ）は平面図、（ｂ）は（ａ）のＡ－Ａ切断面における断面図、（ｃ）は（ａ）のＢ－Ｂ切断面における断面図を示す。

【００２７】図１に示す光半導体パッケージ１は、リードフレーム１３と、光半導体素子２２と、遮光性樹脂成型体１４と、透光性樹脂成型体１６とを備えている。

【００２８】リードフレーム１３は、図１（ａ）に示すように、第１の金属部である金属片１２と、第２の金属部である金属片１１で構成される。金属片１２は、イン

ナーリード部と、このインナリード部から紙面において上下方向と左方向に延在するアウタリード部とを有する略Ｔ字型の形状で形成される。金属片１２のインナーリード部とアウタリード部の境界領域には、後述する遮光性樹脂成型体と透光性樹脂成型体との間の密着性を高めるためのアンカーホール１８が設けられている。また、金属片１１は、インナリード部の先端が金属片１２に所定距離だけ隔てられて紙面右方向に延在するように配置された略ストライプ形状で形成される。これらの金属片１１，１２は、いずれもプレス加工または鋳造により形成することができ、各金属片１１，１２のアウタリード部は、第２の放熱領域をなす。

【００２９】また、同図（ａ）および（ｂ）に示すように、金属片１２は、インナリード部中央の素子実装領域とアウタリード部の各端部とを除く領域がパッケージの底面よりも高くなるように、垂直方向に折曲げられて形成される。このような形状により、金属片１２の素子実装領域とアウタリード部の各端部は、それぞれの底面において光半導体パッケージ１が実装される図示しない基板の主面に接触し、また、これ以外の領域は、基板上の配線から絶縁状態となる。

【００３０】光半導体素子２２は、金属片１２の実装領域上に載置され、導電性接着剤２４により金属片１２の主面に固着される。導電性接着剤２４の材料としては、後述する遮光性樹脂成型体１４の耐熱性を考慮すると、Ａｇ（銀）ペーストが好ましい。光半導体素子２２は、本実施形態においてはＬＥＤ（Light Emitting Diode）であり、端子の一つ、例えばカソードが金属片１２に電気的に接続される。

【００３１】また、光半導体素子２２は、他の端子、例えばアノードが金属ワイヤ２６を介して金属片１１に電気的に接続される。

【００３２】遮光性樹脂成型体１４は、本実施形態において第２の樹脂成型体を構成し、遮光性樹脂により底部と円筒状の側部とが一体的に形成されている。これにより、リードフレーム１３をなす金属片１１，１２は、アウタリード部とインナリード部との境界領域において遮光性樹脂成型体１４の側部により保持され、また、インナリード部は、金属片１２の素子実装領域を除いて遮光性樹脂成型体１４の底部主面により支持される。また、遮光性樹脂成型体１４の側部上面は、中心点に近づくに従い高さが逓減する複数の段部をなす形状を有するように形成される。遮光性樹脂成型体１４の上述した形状は、所定の鋳型にリードフレーム１３を主面が下面となるようにセットし、この鋳型内に遮光性樹脂を流し込むことにより容易に形成することができる。

【００３３】透光性樹脂成型体１６は、本実施形態において第１の樹脂成型体を構成し、ＬＥＤの光軸上で光学的指向性が得られるレンズ形状を有するように成型される。透光性樹脂成型体１６は、本実施形態において、所望のレンズ形状に応じて成型された鋳型を遮光性樹脂成型体１４の側部上面の所定の段部に載置して透光性樹脂を流し込むことにより成型される。上述したように、金属片１１には、アンカーホール１８が設けられているので、これを介して透光性樹脂１６が遮光性樹脂成型体１４と接着されることにより、透光性樹脂成型体１６が遮光性樹脂成型体１４と強く固着する。遮光性樹脂の材料としては、屈折率がレンズそのものに近い樹脂、例えばゲル状のシリコン透明樹脂を用いる。

【００３４】なお、透光性樹脂成型体１６の成型は、上記方法に限ることなく、例えば、ＬＥＤとの間で光学特性が調整された半球体を予め透光性樹脂により形成しておき、この半球体の材料と同一の透光性樹脂をＬＥＤを覆うように半球体の底面に対応する高さまで流し込み、その上に予め形成された半球体を載置して固着させても良い。また、透光性樹脂により一体的に固着させることなく、例えば乾燥窒素（N_2）を充填して半球体のみを遮光性樹脂成型体１４の側部上面の対応する段部に固着させても良い。

【００３５】本実施形態の光半導体パッケージ１によれば、リードフレーム１３のインナリード部における素子形成領域裏面側がパッケージの外部に露出して第１の放熱領域を構成し、さらに、リードフレーム１３のアウタリード部においてパッケージの外部へ延在する第２の放熱領域を４つ備えるので、従来のパッケージと比較して熱抵抗を大幅に低減することができる。また、遮光性樹脂成型体１４が基台となってリードフレーム１３を保持するとともに、遮光性樹脂成型体１４が透光性樹脂成型体１６と固着されてこれを支持するので、接着性に優れ、外部から水分や汚染物質が進入することを確実に防止することができる。また、遮光性樹脂成型体１４の側部上面に複数の段部を設けるので、透光性樹脂成型体１６とＬＥＤ２２との距離を容易に調整することができる。さらに、リードフレーム１３の裏面うち、放熱に直接寄与しない領域は、透光性樹脂成型体１６の底面から所定距離だけ離隔するように形成されるので、基板への実装にあたり基板上配線の設計の自由度を妨げることもない。

【００３６】（２）第２の実施の形態

次に、本発明にかかる光半導体パッケージの第２の実施の形態について図２を参照しながら説明する。

【００３７】図２は、本実施形態の光半導体パッケージ２の説明図であり、（ａ）はその平面図であり、また、（２）は（ａ）のＣ－Ｃ切断面における断面図である。

【００３８】図１に示す光半導体パッケージ１との対比において、図２に示す光半導体パッケージ２の特徴は、リードフレーム３４の構造にある。

【００３９】即ち、本実施形態の光半導体パッケージ２は、図１に示す金属片１２の代りに、金属ブロック３３と金属片３２とを備えている。金属ブロック３３は、半

径の異なる同心円の２つの円板を積載したような形状で一体形成され、頂部の円板部分には側面が中心に向って低くなる傾斜面Ｓ１をなすように切欠きが設けられ、その底面にＬＥＤ２２が載置される。ＬＥＤ２２は、導電性接着剤２４により切欠きの底面に固着されて金属ブロック３３と電気的に接続される。また、金属ブロック３３の底部は、頂部よりも半径が大きい円板形状を有し、その半径は、本実施形態において透光性樹脂成型体１６と略同一である。さらに、遮光性樹脂成型体３６は、その底面から金属ブロック３３の底部が突出するように形成される。このような形状により、金属ブロック３３が底面において図示しない基板上の配線に接続されるとともに、金属ブロック３３の大きな底面積および、遮光性樹脂成型体３６の実装領域に対応する領域を除く底面と基板との間の間隙により、ＬＥＤ２２で発生した熱が効率よく放出される。

【００４０】また、金属ブロック３３の頂部の切欠きに形成された傾斜面Ｓ１により、ＬＥＤ２２の光軸から外れた光が反射して透光性樹脂成型体１６に入射し、光軸にほぼ平行な軌道で外部へ放射される。

【００４１】さらに、遮光性樹脂成型体３６の側部は、図２（ｂ）に示すように、内側が中心に向って低くなる傾斜形状を有し、その表面Ｓ２には、反射材が塗布されて白い光沢面となっている。従って、この傾斜面Ｓ２によっても、光軸から外れた光が反射し、透光性樹脂成型体１６を介して光軸に平行な軌道で放射される。

【００４２】なお、本実施形態においては、ＬＥＤ２２のカソードが金属ブロック３３を介して基板上配線に接続される構成としたが、これに限ることなく、実装される基板の設計に応じて、例えば同図の破線に示すように、金属ブロック３３の頂部周辺領域と金属片３２の先端部とを金属ワイヤ２７にて接続し、金属片３２のパッケージ外側の端部により基板上配線と接続しても勿論良い。

【００４３】

【発明の効果】以上詳述したとおり、本発明は、以下の効果を奏する。

【００４４】即ち、本発明によれば、リードフレームが遮光性樹脂成型体により保持され、その主面に対向する裏面のうち光半導体素子実装領域に対応する領域が上記遮光性樹脂成型体の底部から露出して第１の放熱領域をなすので、上記光半導体素子で発生する熱が高い効率で外部に放出される。これにより、熱抵抗が大幅に低減された光半導体パッケージが提供される。

【図面の簡単な説明】

【図１】本発明にかかる光半導体パッケージの第１の実施の形態の説明図である。

【図２】本発明にかかる光半導体パッケージの第２の実施の形態の説明図である。

【図３】従来の技術による光半導体パッケージの一例を示す正面図および拡大図である。

【符号の説明】

１，２　光半導体パッケージ
１１，１２，３１，３２　金属片
１３，３４　リードフレーム
１４，３６　遮光性樹脂成型体（第１の樹脂成型体）
１６　透光性樹脂成型体（第２の樹脂成型体）
２２　光半導体素子（ＬＥＤ）
２４　導電性接着剤
２６，２７　金属ワイヤ
Ｓ１，Ｓ２　傾斜面

【図１】

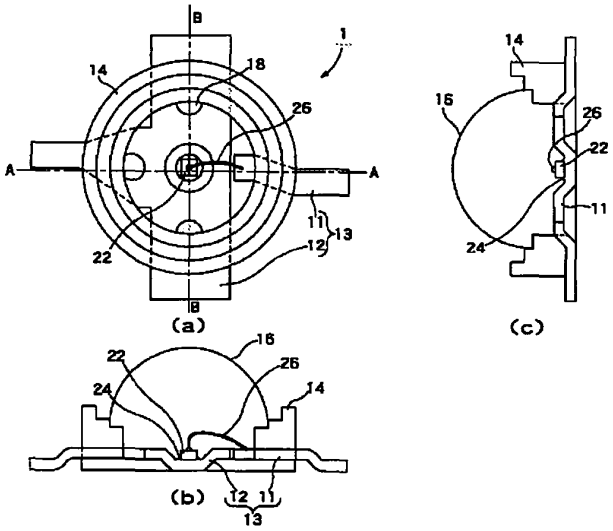
B
1
14
18
26
A
A
22
11
12
13
B
(a)
16
22
26
24
14
(b)
12 11
13
14
16
26
22
11
24
(c)

【図２】

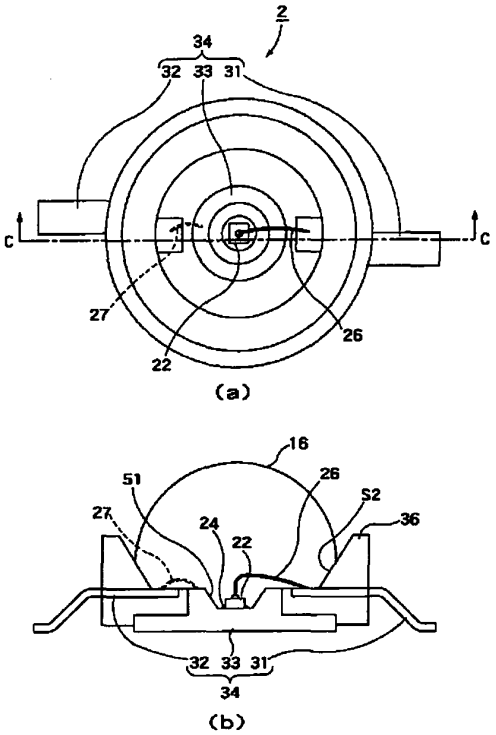
2
34
32 33 31
C
C
27
26
22
(a)
16
51
26
S2
27
24
22
36
32 33 31
34
(b)

【図３】

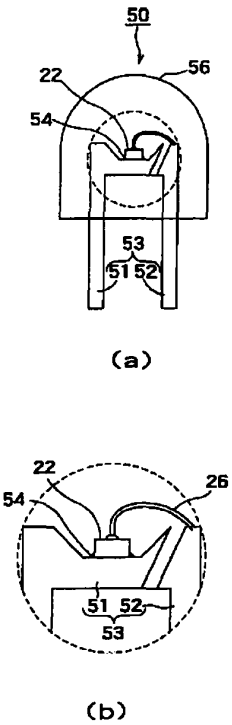
50
22
56
54
53
51 52
(a)
22
26
54
51 52
53
(b)

フロントページの続き

(72)発明者　田　村　英　男
神奈川県川崎市幸区小向東芝町１番地　株式会社東芝マイクロエレクトロニクスセンター内

(72)発明者　杉　崎　雅　之
神奈川県川崎市川崎区日進町７番地１　東芝電子エンジニアリング株式会社内

Ｆターム(参考)　4M109 AA01 BA02 CA21 DA04 DA07 DB04 EC06 EC11 EC12 EE05 EE12 EE13 GA01 GA05
5F041 AA33 DA02 DA12 DA17 DA25 DA45 DA57 EE24

SURFACE-MOUNTED TYPE LIGHT-EMITTING ELEMENT AND LIGHT EMISSION DEVICE USING THE SAME

Publication number:	JP2002252373
Publication date:	2002-09-06
Inventor:	NAGAI YOSHIFUMI
Applicant:	NICHIA KAGAKU KOGYO KK
Classification:	
- International:	H01L33/00; H01L33/00; (IPC1-7): H01L33/00
- European:	H01L33/00B5; H01L33/00B7
Application number:	JP20010050887 20010226
Priority number(s):	JP20010050887 20010226

Abstract of **JP2002252373**

PROBLEM TO BE SOLVED: To provide a surface-mounted type light-emitting element which is excellent in heat dissipation, and a light-emitting device using it. SOLUTION: The surface-mounted type light-emitting element has a light- emitting element chip, a base for disposing the light-emitting element chip, a lead frame connected to the light-emitting chip and a sealing resin formed to cover at least the light-emitting chip, and the base and the lead frame are integrally fixed to it by means of the sealing resin. The lowermost surface of the base viewed from a display surface side is positioned in almost the same surface as the lowermost surface of the lead frame viewed from the display surface side and furthermore, the lowermost surface of the base, as viewed from the display surface side, is exposed from the sealing resin.

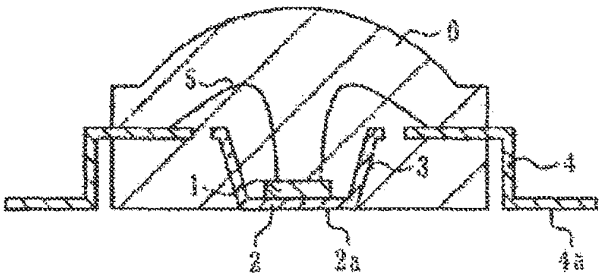

Data supplied from the *esp@cenet* database - Worldwide

(19)日本国特許庁（ＪＰ）　(12) 公開特許公報（Ａ）　(11)特許出願公開番号
特開2002－252373
（P2002－252373A）
(43)公開日　平成14年9月6日(2002.9.6)

(51)Int.Cl.⁷	識別記号	ＦＩ	テーマコード*(参考)
Ｈ０１Ｌ　33/00		Ｈ０１Ｌ　33/00	Ｎ　５Ｆ０４１

審査請求　有　請求項の数８　ＯＬ　（全 ８ 頁）

(21)出願番号　特願2001－50887(P2001－50887)

(22)出願日　平成13年2月26日(2001.2.26)

(71)出願人　000226057
日亜化学工業株式会社
徳島県阿南市上中町岡491番地100

(72)発明者　永井　芳文
徳島県阿南市上中町岡491番地100　日亜化学工業株式会社内

Ｆターム(参考)　5F041 DA17 DA25 DA39 DA55 DC04 DC23

(54)【発明の名称】　表面実装型発光素子およびそれを用いた発光装置

(57)【要約】
【課題】　本発明は、放熱性に優れた表面実装型発光素子およびそれを用いた発光装置を提供することを目的とする。
【解決手段】　本発明の表面実装型発光素子は、発光素子チップと、発光素子チップを配置する基台と、発光素子チップに接続されるリードフレームと、少なくとも発光素子チップを覆うように形成された封止樹脂とを備え、基台およびリードフレームが封止樹脂により一体に固定される表面実装型発光素子であって、特に、表示面側から見た基台の最下面が表示面側から見たリードフレームの最下面と略同じ面に位置し、さらに表示面側から見た基台の最下面が封止樹脂から露出していることを特徴とする。

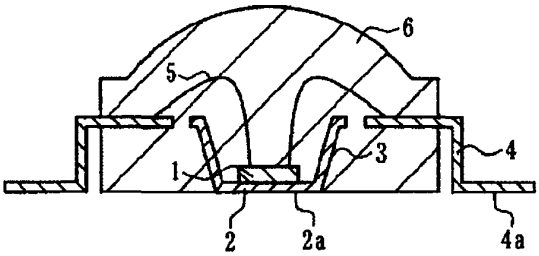

【特許請求の範囲】

【請求項１】　発光素子チップと、
前記発光素子チップを配置する基台と、
前記発光素子チップに接続されるリードフレームと、
少なくとも前記発光素子チップを覆うように形成された封止樹脂とを備え、
前記基台および前記リードフレームが前記封止樹脂により一体に固定される表面実装型発光素子において、
表示面側から見た前記基台の最下面は、表示面側から見た前記リードフレームの最下面と略同じ面に位置し、さらに表示面側から見た前記基台の最下面は、前記封止樹脂から露出していることを特徴とする表面実装型発光素子。

【請求項２】　前記基台は、前記リードフレームと同じ材料からなることを特徴とする請求項１に記載の表面実装型発光素子。

【請求項３】　前記基台の膜厚は、前記リードフレームの膜厚よりも厚いことを特徴とする請求項１または２に記載の表面実装型発光素子。

【請求項４】　前記基台は、周囲に側壁を備えることを特徴とする請求項１乃至３に記載の表面実装型発光素子。

【請求項５】　前記発光素子チップは、熱伝導性材料を介して前記基台に配置されることを特徴とする請求項１乃至４に記載の表面実装型発光素子。

【請求項６】　請求項１乃至５に記載の表面実装型発光素子が、導体パターンを有する基板上に配置され、
表示面側から見た前記基台の最下面が、前記導体パターンに接続されることを特徴とする発光装置。

【請求項７】　前記発光装置は、第１の放熱性部材を有し、
前記基板はスルーホールを有すると共に、前記スルーホールは表示面側から裏面側まで連続的に形成された導体パターンを備え、
表示面側から見た前記基台の最下面は、前記スルーホールの表示面側に位置する導体パターンに接続され、さらに前記第１の放熱性部材は、前記スルーホールの裏面側に位置する導体パターンに接続されることを特徴とする請求項６に記載の発光装置。

【請求項８】　前記発光装置は、さらに第２の放熱性部材を備え、
前記第２の放熱性部材は、前記第１の放熱性部材に接続されることを特徴とする請求項７に記載の発光装置。

【発明の詳細な説明】

【０００１】

【発明の属する技術分野】本発明は表面実装型発光素子およびそれを用いた発光装置に係わり、特に放熱性を向上させるために改良した表面実装型発光素子およびそれを用いた発光装置に関する。また本明細書でいう発光装置とは、画像を表示する表示装置または照明装置などを指す。

【０００２】

【従来の技術】図１０および図１１に、従来の表面実装型発光素子の一例の概略断面図を示す。ここでは、ＬＥＤ（発光ダイオード）を発光素子とする例について説明する。

【０００３】図１０に示す従来の表面実装型発光素子は、一方のリードフレームにＬＥＤチップ４５が配置され、ＬＥＤチップに形成された一対の電極は、それぞれに対応するリードフレームに金線などよりなるワイヤー４７により接続される。さらに、ＬＥＤチップ４５、ワイヤー４７、およびリードフレーム４６の一部がエポキシ樹脂またはシリコーン樹脂などからなる封止樹脂４８で覆われることにより表面実装型ＬＥＤが形成される。

【０００４】また、図１１に示す従来の表面実装型発光素子は、液晶ポリマーなどからなるパッケージ５０に、一対のリードフレーム５１が形成され、一方のリードフレーム上にＬＥＤチップ４９が配置される。ＬＥＤチップに形成された一対の電極は、それぞれに対応するリードフレームに金線などからなるワイヤー５２により接続される。さらに、ＬＥＤチップ４９、ワイヤー５２、およびリードフレーム５１の一部がエポキシ樹脂またはシリコーン樹脂などからなる封止樹脂５３で覆われることにより表面実装型ＬＥＤが形成される。

【０００５】図１０乃至図１１に示す従来の表面実装型ＬＥＤは、複数の導体パターンが形成された基板に配置され、各リードフレームがそれぞれに対応する導体パターンに半田などにより接続されることにより発光装置として実際に使用することができる。また、ＬＥＤチップをリードフレーム上に配置することにより、すなわち比較的熱伝導率のよいリードフレームを介することにより、ＬＥＤチップから基板への放熱性を向上させることができる。

【０００６】

【発明が解決しようとする課題】しかしながら、従来の表面実装型発光素子は、リードフレーム４６、５１上にＬＥＤチップ４５、４９を配置することにより、ＬＥＤチップにて発生する熱をリードフレームを介して基板に逃がしてはいるものの、リードフレームと基板との間に封止樹脂４８乃至パッケージ５０を介しているために、熱を伝える経路となるリードフレームが必要以上に長くなってしまい、その放熱効果は十分に満足できるものではなかった。すなわち、ＬＥＤチップから基板への放熱性を向上させることができないために、結果的に発光素子自体の寿命を縮めたり発光輝度を低下させてしまい、より高い信頼性が得られないという問題があった。

【０００７】本発明は、発光素子チップと基板の間の距離を最小限にすることにより、発光素子チップの基板への放熱性を飛躍的に向上させた表面実装型発光素子およびそれを用いた発光装置を提供することを目的とする。

【０００８】

【発明を解決するための手段】本発明の表面実装型発光素子は、発光素子チップと、発光素子チップを配置する基台と、発光素子チップに接続されるリードフレームと、少なくとも発光素子チップを覆うように形成された封止樹脂とを備え、基台およびリードフレームが封止樹脂により一体に固定される表面実装型発光素子であり、特に、表示面側から見た基台の最下面が表示面側から見たリードフレームの最下面と略同じ面に位置し、さらに表示面側から見た基台の最下面が封止樹脂から露出していることを特徴とする。このように構成することにより、基台を封止樹脂から露出させることができるので、発光素子チップの放熱性を向上させることができる。

【０００９】また、基台はリードフレームと同じ材料からなることが好ましい。このように構成することにより、基台およびリードフレームを一工程で形成することができるので、本発明の表面実装型発光素子を比較的容易に量産することができる。

【００１０】また、基台の膜厚はリードフレームの膜厚よりも厚くすることができる。このように構成することにより、表示面側から見た封止樹脂の最下面から封止樹脂内部に位置するリードフレームまでの距離を容易に確保することができる。これにより、封止樹脂とリードフレームとの接触部分における強度を確保することができる。

【００１１】また、基台は、周囲に側壁を備えることが好ましい。このように構成することにより、発光素子チップから出射される光を効率的に表示面側に取り出すことができる。

【００１２】また、発光素子チップは熱伝導性材料を介して基台に配置されることが好ましい。このように構成することにより、ＬＥＤチップにて発生した熱がより効率よく基台に伝わり、放熱性をより向上させることができる。なお、ここでいう熱伝導性材料とはエポキシ樹脂などの絶縁性樹脂ではなく、それよりも熱伝導率のよい材料を指す。

【００１３】また、本発明の発光装置は、本発明の表面実装型発光素子が導体パターンを有する基板上に配置され、表示面側から見た前記基台の最下面が前記導体パターンに接続されることを特徴とする。このように基台と基板を直接接続することにより、発光素子チップで発生した熱をより効率的に基板に逃がすことができる。

【００１４】また、本発明の発光装置は第１の放熱性部材を備え、基板がスルーホールを有すると共にスルーホールが表示面側から裏面側まで連続的に形成された導体パターンを備え、表示面側から見た前記基台の最下面がスルーホールの表示面側に位置する導体パターンに接続され、さらにスルーホールの裏面側に位置する導体パターンに、第１の放熱性部材を接続させることができる。このように構成することにより、発光素子チップで発生した熱を効率的に第１の放熱性部材に逃がすことができる。

【００１５】また、本発明の発光装置はさらに第２の放熱性部材を備え、第２の放熱性部材を第１の放熱性部材に接続させることができる。このように構成することにより、発光素子チップで発生した熱を第１の放熱性部材を介して効率的に第２の放熱性部材に逃がすことができる。

【００１６】

【発明の実施の形態】図１に、本発明に係る図２に示す表面実装型発光素子のＡ－Ａ’部における概略断面図を示す。なお、図２は本発明に係る表面実装型発光素子を裏面側からみた概略図である。ここでは、発光素子チップとしてＬＥＤ（発光ダイオード）チップ１を用いた表面実装型発光素子（表面実装型ＬＥＤ）について説明する。

【００１７】ＬＥＤチップ１が配置される基台２は、周囲に側壁３を備えることができる。側壁３は基台と接触せずに、すなわち基台と間を介して任意の位置に構成することもできるが、基台に直接形成されることが好ましい。さらに好ましくは、図１に示すように、基台２自体が側壁３を備えた形状とするとよい。このようにすることより、構成を単純化することができ、作業効率を向上させることができる。また、ＬＥＤチップ１は同一面側に一対の電極が形成され、各電極はそれぞれに対応するリードフレーム４に金線などよりなるワイヤー５により接続される。各リードフレーム４は、表示面側から見た基台の最下面２ａと表示面側から見たリードフレームの最下面４ａが略同じ面に位置すると共に、表示面側から見た基台の最下面２ａが透光性の封止樹脂６から露出するように形成される。また、ここでは、同一面上に一対の電極を備えるＬＥＤチップを用いたが、本発明はこれに限定されず、対向する両面にそれぞれ電極を備えたＬＥＤチップを用いることもできる。この場合、ＬＥＤチップは基台に導電性材料を介して接続されると共に、基台は対応するどちらか一方のリードフレームと連続して形成される。さらに、ＬＥＤチップ１、ワイヤー５、リードフレーム４の一部、側壁３、および少なくとも基台２の一部を覆うように、エポキシ樹脂乃至シリコーン樹脂などよりなる封止樹脂６が形成される。

【００１８】図２に、本発明に係る表面実装型ＬＥＤを表示面と反対の側すなわち裏面側からみた概略図を示す。このように、裏面側から本発明に係る表面実装型発光素子を見ると、表示面側から見た基台の最下面２ａが、封止樹脂６から露出している。なお、図２においては説明の簡略化のため、封止樹脂６の内部に配置されるＬＥＤチップ１、ワイヤー５、リードフレーム４の一部、側壁３は図示していない。

【００１９】また、側壁３および基台２はリードフレーム４と同じ材料から構成されることが好ましい。形成方

法としては１枚の金属板を押圧切断加工すなわちプレス形成することにより、側壁３、基台２、およびリードフレーム４を一工程で得ることができる。これにより、作業効率を大幅に向上させることができ、量産することが可能となる。金属板としては例えば銅を主成分とする合金などが挙げられる。また、側壁の形状、すなわち高さ乃至傾きは用途に応じて任意に決定することができる。例えば、側壁の高さを低く設定すれば、表面実装型ＬＥＤ全体としての薄型化を容易に行うことができる。

【００２０】さらに、基台の厚さ乃至形状も任意に決定することができる。例えば、図６に示すように基台２４の膜厚をリードフレーム２６の膜厚よりも厚く形成すれば、表示面側から見た封止樹脂の最下面２８ａから封止樹脂２８内部に位置するリードフレーム２６までの距離を容易に確保することができる。これにより、封止樹脂とリードフレームとの接触部分における強度を確保することができる。

【００２１】図３に、図１に示す表面実装型ＬＥＤを、複数の導体パターン８が形成された基板７に配置した発光装置の一例を示す。各リードフレーム４は、表示面側から見たリードフレームの最下面にて、それぞれに対応する導体パターンに半田９などにより接続される。さらに、リードフレーム４だけでなく基台２も半田などにより導体パターンに接続されることが好ましい。半田は、導電性材料であると共に熱伝導率のよい材料でもあるので、ＬＥＤチップ１から基板７への放熱性を大幅に向上せさることができる。

【００２２】また、基台２に接続される導体パターンは、各リードフレーム４に対応する導体パターンと異なる必要はなく、少なくとも一方のリードフレームに対応する導体パターンと異なっていればよい。すなわち、基台２に接続される導体パターンは、一方のリードフレームに対応する導体パターンと連続して形成されていてもよい。このように構成することにより、基台が接続される導体パターンの表面積を大きく取ることができるので、ＬＥＤチップから基板への放熱をより効率よく行うことができる。

【００２３】また、本発明においては、ＬＥＤチップは熱伝導性材料を用いて基台に配置されることが好ましい。もちろん、ＬＥＤチップをエポキシ樹脂などからなる絶縁性材料にて基台に配置することもできるが、樹脂材料のかわりにそれよりも熱伝導率のよい材料を用いるほうが好ましい。熱伝導性材料としては例えばＡｎＳｎ共晶、半田などを好適に用いることができる。また、ＬＥＤチップの裏面がサファイアなどの絶縁性物質からなる場合は、ＬＥＤチップの裏面に例えばＡｇ－Ｔｉ－Ａｕなどからなるメタル層を形成し、ＬＥＤチップと基台との接着性を向上させることが好ましい。なお、熱伝導性材料およびメタル層はこれらに限定されないことは言うまでもない。

【００２４】また、リードフレームの形状は、図１乃至３に示すように、表示面側から見て外側に張り出した形状とすることができる。これにより、表示面側から見た基台の最下面２ａと表示面側から見たリードフレームの最下面４ａとを略同じ面に容易に位置させることができる。

【００２５】一方、図１乃至３においては、表示面側から見てリードフレーム４が外側に張り出した形状としたが、図５に示すように、リードフレーム２０をコの字型に形成する、すなわちリードフレーム２０を表示面側から見て封止樹脂の最下面に折り込むこともできる。これにより、リードフレームと基板の導体パターンとの接続面を封止樹脂２２の真下に位置させることができるので、複数の表面実装型ＬＥＤを隣接して配置する際、より高密度に配置することができる。この場合、表示面側から見たリードフレームの最下面２０ａと基台の最下面１８ａが略同じ面に位置するように、封止樹脂２２の裏面側にはリードフレーム２０の形状に対応した凹部が予め形成されることが好ましい。

【００２６】また、本発明の表面実装型発光素子は、図４に示すように基台１１が延伸部１３を備えてもよい。なお、図４は延伸部１３を備える発光素子を表示面側から見た概略図である。ここではリードフレーム１４の長手方向に対して垂直方向に延伸部１３が備えられる。また基台の延伸部１３は封止樹脂１６から露出した構成をとる。さらに、延伸部１３は発光素子が配置される基板上に形成された導体パターンに接続されることが好ましい。ここでは、基台が延伸部１３を２つ備える構成としたが、基台の延伸部１３の個数は１つまたは３つ以上であってもよい。さらに延伸部は後に記載するスルーホールの導体パターンに接続することもできる。

【００２７】本発明の表面実装型発光素子は、図１～６に示すように、ＬＥＤチップ、基台、リードフレームの一部が、１種類の共通の封止樹脂により一体に固定される所謂トランスファーモールドが施される。もちろん、例えば図７に示すように、基台３０を配置するための凹部を設けた液晶ポリマーなどからなるパッケージ３２に基台３０を配置し凹部内にさらに透光性の封止樹脂３５を充填した構成とすることもできるが、本発明の表面実装型発光素子は作業効率を考慮してトランスファーモールドとする。これにより、量産することが可能となる。

【００２８】また、封止樹脂の形状は特に限定されるものではなく、断面の表示面側が湾曲形状、あるいは平坦な直線形状などとすることができ、用途により選択することができる。

【００２９】図８に、本発明の図１に示す表面実装型ＬＥＤをスルーホール３６を備える基板３８に配置した発光装置の一例を示す。ここでは、基台２がスルーホール３６に形成された導体パターン３７を介して第１の放熱性部材３９に接続された装置について説明する。スルー

ホール３６の表示面側および裏面側近傍と側壁全域には、銅箔などからなる導体パターン３７が連続して形成される。封止樹脂６から露出した基台の最下面は例えば半田などによりスルーホールの表示面側の導体パターンに接続される。さらにスルーホールの裏面側の導体パターンには例えば半田などにより第１の放熱性部材３９が接続される。このように構成することにより、ＬＥＤチップ１からの熱を第１の放熱性部材３９に効率よく伝える事ができる。また、ここでは第１の放熱性部材３９は表面積が大きくなるように複数の凹部３９ａが形成されることが好ましい。これにより第１の放熱性部材３９からの放熱をより効率よく行うことができる。さらに第１の放熱性部材３９の近傍には例えば送風機などを設置し、空気を流動させることが好ましい。これにより第１の放熱性部材からの放熱をさらに効率よく行うことができる。また、基板３８の導体パターンと第１の放熱性部材３９との接触面積は、基台２の最下面と基板３８の導体パターンとの接触面積よりも大きいことが好ましい。これによりＬＥＤチップ１の熱を円滑に第１の放熱性部材３９に伝えることができる。さらに、図８に示すように、スルーホールの内部は全域が半田で充填されることが好ましい。これにより、ＬＥＤチップ１の熱を効率的に第１の放熱性部材３９に伝えることができる。

【００３０】図９に、本発明の図１に示す表面実装型ＬＥＤをスルーホール４０を備える基板４２に配置した発光装置の他の一例を示す。ここでは、ＬＥＤチップ１を配置する基台２が、スルーホール４０に形成された導体パターン４１および第１の放熱性部材４３を介して、第２の放熱性部材４４に接続された装置について説明する。図９においては第１の放熱性部材４３は、それ自体で放熱を行うだけでなく、主にＬＥＤチップ１からの熱を第２の放熱性部材４４に伝える働きをする。このように構成することにより、ＬＥＤチップ１からの熱を、第１の放熱性部材４３を介して、第２の放熱性部材４４に効率よく伝える事ができる。ここでは、第１の放熱性部材４３と第２の放熱性部材４４とが固定ビスにより接続されるが、本発明においてはこれに限定されないことは言うまでもない。また、図９においては一例として、第１の放熱性部材をＴ字型とし、第２の放熱性部材を板状とする。また、１つの第２の放熱性部材に複数の第１の放熱性部材が接続されてもよい。これにより作業効率を向上させることができると共に、第２の放熱性部材の表面積をより大きく取ることができる。

【００３１】また、図８乃至９に示す第１の放熱性部材および第２の放熱性部材の材料は特に限定されず、放熱性すなわち熱伝導性を備えていればよい。具体的には銅、アルミなどの金属あるいは銅、アルミなどを主成分とする合金などが挙げられる。さらに図８乃至９に示す第１の放熱性部材および第２の放熱性部材は、説明上、基台の真下に位置しているが、これらは熱的に伝導されていればよく、必ずしも真下に位置する必要はない。

【００３２】なお、図１乃至９においては、１つの基台に１つのＬＥＤチップが配置されるが、もちろん１つの基台に複数のＬＥＤチップを配置してもよい。さらに、リードフレームは一対である必要はなく複数のリードフレームを備えてもよい。

【００３３】また、光散乱材、蛍光物質を含有した層をＬＥＤチップを覆うように設けることも可能である。光散乱材、蛍光物質は特に限定されるものではないが、例えば光散乱材としては、チタン酸バリウム、酸化チタン、酸化アルミニウム、酸化ケイ素などが好適に用いられる。これにより、良好な指向特性を得ることができる。さらに、蛍光物質としては、窒化物系半導体を発光層とする発光素子チップを用いる場合、セリウムで付活されたイットリウム・アルミニウム酸化物系蛍光物質をベースとしたものが好適に用いられる。具体的なイットリウム・アルミニウム酸化物系蛍光物質としては、$YAlO_3$：Ｃｅ、$Y_3Al_5O_{12}$：Ｃｅ（ＹＡＧ：Ｃｅ）や、$Y_4Al_2O_9$：Ｃｅ、さらにはこれらの混合物などが挙げられる。本発明の発光素子は、放熱性に優れるので電流を大きくかけ高輝度に発光させることが比較的容易である。これにより、光散乱材、蛍光物質を効率よく機能させることができる。

【００３４】

【発明の効果】以上、説明した通り、本発明により放熱性に優れた表面実装型発光素子およびそれを用いた発光装置を提供することができる。また、本発明の表面実装型発光素子およびそれを用いた発光装置は、発光素子チップにて発生する熱が大きいほど効果を発揮することができる。

【図面の簡単な説明】

【図１】　図２に示す表面実装型発光素子のＡ－Ａ’部における概略断面図である。

【図２】　本発明に係る表面実装型発光素子を裏面側から見た概略図である。

【図３】　本発明に係る発光装置の構成を示す概略断面図である。

【図４】　本発明に係る他の表面実装型発光素子の概略断面図である。

【図５】　本発明に係る他の表面実装型発光素子の概略断面図である。

【図６】　本発明に係る他の表面実装型発光素子の概略断面図である。

【図７】　本発明に係る他の表面実装型発光素子の概略断面図である。

【図８】　本発明に係る発光装置の構成を示す他の概略断面図である。

【図９】　本発明に係る発光装置の構成を示す他の概略断面図である。

【図１０】　従来の表面実装型発光素子の構成を示す概

略断面図である。

【図１１】　従来の表面実装型発光素子の構成を示す他の概略断面図である。

【符号の説明】

１、１０、１７、２３、２９、４５、４９・・・ＬＥＤチップ

２、１１、１８、２４、３０・・・基台

２ａ、１１ａ、１８ａ、２４ａ、３０ａ・・・基台の最下面

３、１２、１９、２５、３１・・・側壁

４、１４、２０、２６、３３、４６、５１・・・リードフレーム

４ａ、２０ａ、２６ａ、３３ａ・・・リードフレームの最下面

＊５、１５、２１、２７、３４、４７、５２・・・ワイヤー

６、１６、２２、２８、３５、４８、５３・・・封止樹脂

７、３８、４２・・・基板

８、３７、４１・・・導体パターン

９・・・半田

１３・・・基台延伸部

３２、５０・・・パッケージ

３２ａ・・・パッケージ突起部

３６、４０・・・スルーホール

３９、４３・・・第１の放熱性部材

３９ａ・・・凹部

４４・・・第２の放熱性部材

【図１】

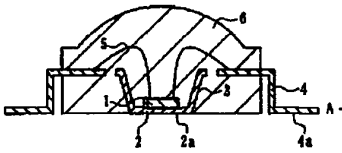

【図２】

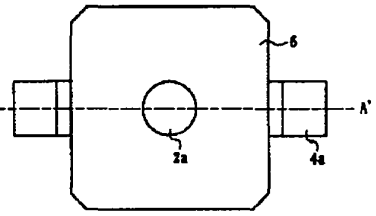

【図４】

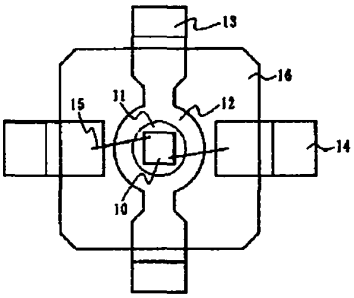

【図３】

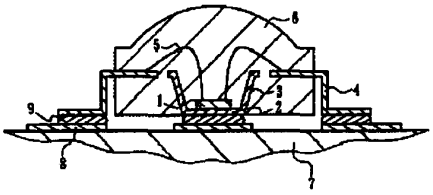

【図５】

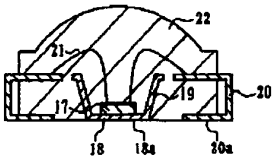

【図６】

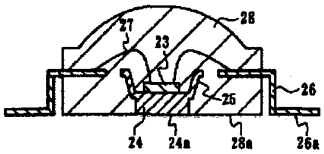

【図７】

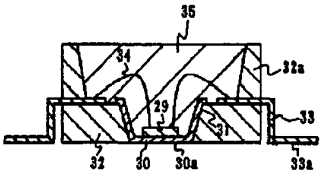

【図８】

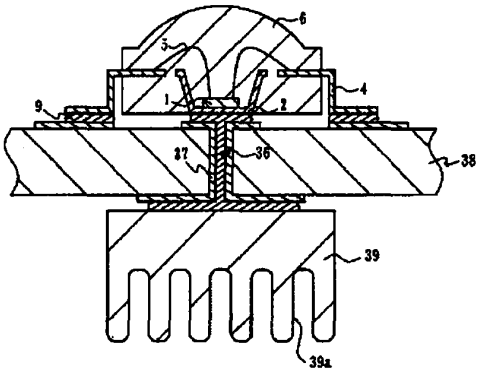

【図１０】

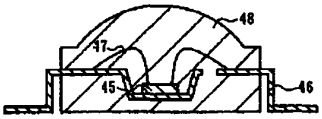

【図１１】

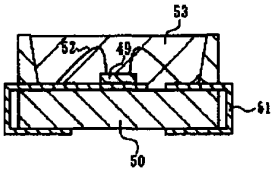

【図９】

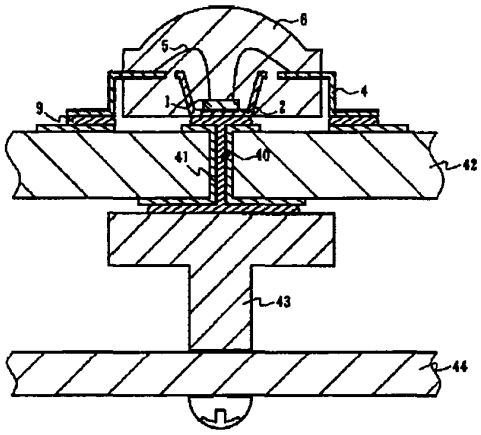

【手続補正書】
【提出日】平成１４年５月８日（２００２．５．８）
【手続補正１】
【補正対象書類名】明細書
【補正対象項目名】特許請求の範囲
【補正方法】変更
【補正内容】
【特許請求の範囲】
【請求項１】　発光素子チップ１と、前記発光素子チップ１が配置される基台２と、前記発光素子チップ１の電極と接続されるリードフレーム４と、少なくとも前記発光素子チップ１、前記基台２の一部、および前記リードフレーム４の一部を覆い一体に固定する透光性の封止樹脂６とを備え、
前記基台２の最下面２ａは、前記リードフレーム４の最下面４ａと略同じ面に位置し、さらに前記透光性の封止樹脂６から露出していることを特徴とする表面実装型発光素子。
【請求項２】　発光素子チップ２９と、前記発光素子チップ２９が配置される基台３０が凹部内に配置されたパッケージ３２と、前記発光素子チップ２９の電極と接続されるリードフレーム３３とを備え、
前記基台３０の最下面３０ａは、前記リードフレーム３３の最下面３３ａと略同じ面に位置し、さらに前記パッケージ３２から露出していることを特徴とする表面実装型発光素子。
【請求項３】　前記基台の膜厚は、前記リードフレームの膜厚よりも厚いことを特徴とする請求項１または２に記載の表面実装型発光素子。
【請求項４】　前記基台は、周囲に側壁を備えることを特徴とする請求項１乃至３に記載の表面実装型発光素子。
【請求項５】　前記発光素子チップは、熱伝導性材料を介して前記基台に配置されることを特徴とする請求項１乃至４に記載の表面実装型発光素子。
【請求項６】　請求項１乃至５のいずれかに記載の表面実装型発光素子が、複数の導体パターンを有する基板上に配置され、
前記複数の導体パターンは、該表面実装型発光素子の基台の最下面に接続される導体パターンとリードフレームに対応する導体パターンとを有し、
前記基台の最下面は、前記導体パターンに熱伝導性材料により接続されることを特徴とする発光装置。
【請求項７】　前記基板はスルーホール３６を有すると共に、前記スルーホールは表示面側から裏面側まで連続的に形成された導体パターン３７を備え、
前記基台の最下面は、前記スルーホールの表示面側に位置する導体パターンに接続され、さらに前記スルーホールの裏面側に位置する導体パターンに第１の放熱性部材３９が接続されることを特徴とする請求項６に記載の発光装置。
【請求項８】　第２の放熱性部材が、前記第１の放熱性部材に接続されることを特徴とする請求項７に記載の発光装置。
【手続補正２】
【補正対象書類名】明細書
【補正対象項目名】０００８
【補正方法】変更
【補正内容】
【０００８】
【発明を解決するための手段】本発明の表面実装型発光素子は、発光素子チップ１と、前記発光素子チップ１が配置される基台２と、前記発光素子チップ１の電極と接

続されるリードフレーム４と、少なくとも前記発光素子チップ１、前記基台２の一部、および前記リードフレーム４の一部を覆い一体に固定する透光性の封止樹脂６とを備え、前記基台２の最下面２ａは、前記リードフレーム４の最下面４ａと略同じ面に位置し、さらに前記透光性の封止樹脂６から露出していることを特徴とする。このように構成することにより、基台を封止樹脂から露出させることができるので、発光素子チップの放熱性を向上させることができる。

【手続補正３】
【補正対象書類名】明細書
【補正対象項目名】０００９
【補正方法】変更
【補正内容】
【０００９】また別の態様として、発光素子チップ２９と、前記発光素子チップ２９が配置される基台３０が凹部内に配置されたパッケージ３２と、前記発光素子チップ２９の電極と接続されるリードフレーム３３とを備え、前記基台３０の最下面３０ａは、前記リードフレーム３３の最下面３３ａと略同じ面に位置し、さらに前記パッケージ３２から露出していることを特徴とする。

【手続補正４】
【補正対象書類名】明細書
【補正対象項目名】００１３
【補正方法】変更
【補正内容】
【００１３】また、本発明の発光装置は、本発明の表面実装型発光素子が複数の導体パターンを有する基板上に配置され、前記複数の導体パターンは、該表面実装型発光素子の基台の最下面に接続される導体パターンとリードフレームに対応する導体パターンとを有し、前記基台の最下面は、前記導体パターンに熱伝導性材料により接続されることを特徴とする。このように基台と基板を直接接続することにより、発光素子チップで発生した熱を効率的に基板へ逃がすことができる。

Electronic Acknowledgement Receipt

EFS ID:	3866632
Application Number:	11576882
International Application Number:	
Confirmation Number:	6820
Title of Invention:	Side Illumination Lens and Luminescent Device Using the Same
First Named Inventor/Applicant Name:	Do-Hyung Kim
Customer Number:	20575
Filer:	Gregg James Palmer/Sue Lukas
Filer Authorized By:	Gregg James Palmer
Attorney Docket Number:	3576-043
Receipt Date:	29-AUG-2008
Filing Date:	06-APR-2007
Time Stamp:	17:10:08
Application Type:	U.S. National Stage under 35 USC 371

Payment information:

Submitted with Payment	no

File Listing:

Document Number	Document Description	File Name	File Size(Bytes)/ Message Digest	Multi Part /.zip	Pages (if appl.)
1	Miscellaneous Incoming Letter	6647_043IDSTrans.pdf	58335 1c5c84962846350d411006d328b94741a9dfcc73	no	1

Warnings:

Information:

2	Information Disclosure Statement (IDS) Filed (SB/08)	3576_043_IDS.pdf	607842 0db4b9a7f5a8c8aaa9f59b0e2cd3a63fae7d4d8c	no	4
Warnings:					
Information:					
A U.S. Patent Number Citation or a U.S. Publication Number Citation is required in the Information Disclosure Statement (IDS) form for autoloading of data into USPTO systems. You may remove the form to add the required data in order to correct the Informational Message if you are citing U.S. References. If you chose not to include U.S. References, the image of the form will be processed and be made available within the Image File Wrapper (IFW) system. However, no data will be extracted from this form. Any additional data such as Foreign Patent Documents or Non Patent Literature will be manually reviewed and keyed into USPTO systems.					
3	Foreign Reference	JP2000150967.pdf	724325 7f0eaec61af9fb91fc75ebecbcf631605539ee13	no	6
Warnings:					
Information:					
4	Foreign Reference	JP2001185763.pdf	878812 796398533938110ceeafc54dd79e1d050e7592a1	no	8
Warnings:					
Information:					
5	Foreign Reference	JP2002252373.pdf	1019247 9bf3b25bb65a0831880ed1f13db56c92f8e35936	no	9
Warnings:					
Information:					
			Total Files Size (in bytes):	3288561	

This Acknowledgement Receipt evidences receipt on the noted date by the USPTO of the indicated documents, characterized by the applicant, and including page counts, where applicable. It serves as evidence of receipt similar to a Post Card, as described in MPEP 503.

<u>New Applications Under 35 U.S.C. 111</u>
If a new application is being filed and the application includes the necessary components for a filing date (see 37 CFR 1.53(b)-(d) and MPEP 506), a Filing Receipt (37 CFR 1.54) will be issued in due course and the date shown on this Acknowledgement Receipt will establish the filing date of the application.

<u>National Stage of an International Application under 35 U.S.C. 371</u>
If a timely submission to enter the national stage of an international application is compliant with the conditions of 35 U.S.C. 371 and other applicable requirements a Form PCT/DO/EO/903 indicating acceptance of the application as a national stage submission under 35 U.S.C. 371 will be issued in addition to the Filing Receipt, in due course.

<u>New International Application Filed with the USPTO as a Receiving Office</u>
If a new international application is being filed and the international application includes the necessary components for an international filing date (see PCT Article 11 and MPEP 1810), a Notification of the International Application Number and of the International Filing Date (Form PCT/RO/105) will be issued in due course, subject to prescriptions concerning national security, and the date shown on this Acknowledgement Receipt will establish the international filing date of the application.

IN THE UNITED STATES PATENT AND TRADEMARK OFFICE

MISCELLANEOUS TRANSMITTAL LETTER FOR

INFORMATION DISCLOSURE STATEMENT

REGARDING PAYMENT OF FEES

☐ Payment of fees is made via electronic filing system authorizing credit card payments.

☐ In the event of computer malfunction, Applicant requests that any fees be charged to deposit account number 13-1703.

☒ Please charge any deficiency or overpayment to deposit account number 13-1703.

Customer No. 20575

Respectfully submitted,

MARGER JOHNSON & McCOLLOM, P.C.
210 SW Morrison Street, Suite 400
Portland, OR 97204
(503) 222-3613

Alan T. McCollom
Reg. No. 28,881

Approved

PTO/SB/80 (01-06)
Approved for use through 12/31/2008. OMB 0651-0035
U.S. Patent and Trademark Office; U.S. DEPARTMENT OF COMMERCE
Under the Paperwork Reduction Act of 1995, no persons are required to respond to a collection of information unless it displays a valid OMB control number

POWER OF ATTORNEY TO PROSECUTE APPLICATIONS BEFORE THE USPTO

I hereby revoke all previous powers of attorney given in the application identified in the attached statement under 37 CFR 3.73(b).

I hereby appoint:

[X] Practitioners associated with the Customer Number: 58027

OR

[ ] Practitioner(s) named below (if more than ten patent practitioners are to be named, then a customer number must be used):

Name	Registration Number	Name	Registration Number

as attorney(s) or agent(s) to represent the undersigned before the United States Patent and Trademark Office (USPTO) in connection with any and all patent applications assigned only to the undersigned according to the USPTO assignment records or assignment documents attached to this form in accordance with 37 CFR 3.73(b).

Please change the correspondence address for the application identified in the attached statement under 37 CFR 3.73(b) to:

[X] The address associated with Customer Number: 58027

OR

[ ] Firm or Individual Name			
Address			
City		State	Zip
Country			
Telephone		Email	

Assignee Name and Address
Seoul Semiconductor Co. Ltd.
148-29 Gasan-dong, Geumcheon-gu,
Seoul, Republic of Korea

A copy of this form, together with a statement under 37 CFR 3.73(b) (Form PTO/SB/96 or equivalent) is required to be filed in each application in which this form is used. The statement under 37 CFR 3.73(b) may be completed by one of the practitioners appointed in this form if the appointed practitioner is authorized to act on behalf of the assignee, and must identify the application in which this Power of Attorney is to be filed.

SIGNATURE of Assignee of Record
The individual whose signature and title is supplied below is authorized to act on behalf of the assignee

Signature	YCM YEASIN	Date	Aug. 12, 2008
Name	YEASIN, YCM	Telephone	+82-10-4728-2684
Title	Director of IP & Legal Group		

This collection of information is required by 37 CFR 1.31, 1.32 and 1.33. The information is required to obtain or retain a benefit by the public which is to file (and by the USPTO to process) an application. Confidentiality is governed by 35 U.S.C. 122 and 37 CFR 1.11 and 1.14. This collection is estimated to take 3 minutes to complete, including gathering, preparing, and submitting the completed application form to the USPTO. Time will vary depending upon the individual case. Any comments on the amount of time you require to complete this form and/or suggestions for reducing this burden, should be sent to the Chief Information Officer, U.S. Patent and Trademark Office, U.S. Department of Commerce, P.O. Box 1450, Alexandria, VA 22313-1450. DO NOT SEND FEES OR COMPLETED FORMS TO THIS ADDRESS. **SEND TO: Commissioner for Patents, P.O. Box 1450, Alexandria, VA 22313-1450.**

If you need assistance in completing the form, call 1-800-PTO-9199 and select option 2.

PTO/SB/96 (09-04)
Approved for use through 07/31/2006. OMB 0651-0031
U.S. Patent and Trademark Office; U.S. DEPARTMENT OF COMMERCE
Under the Paperwork Reduction Act of 1995, no persons are required to respond to a collection of information unless it displays a valid OMB control number.

STATEMENT UNDER 37 CFR 3.73(b)

Applicant/Patent Owner: Do-Hyung Kim, et al.

Application No./Patent No.: 11/576,882 Filed/Issue Date: April 6, 2007

Entitled: SIDE ILLUMINATION LENS AND LUMINESCENT DEVICE USING THE SAME

Seoul Semiconductor Co., Ltd., a Corporation
(Name of Assignee) (Type of Assignee, e.g., corporation, partnership, university, government agency, etc.)

states that it is:

1. ☒ the assignee of the entire right, title, and interest; or
2. ☐ an assignee of less than the entire right, title, and interest

The extent (by percentage) of its ownership interest is _____ %

in the patent application/patent identified above by virtue of either:

A. ☒ An assignment from the inventor(s) of the patent application/patent identified above. The assignment was recorded in the United States Patent and Trademark Office at Reel 019128, Frame 0761, or for which a copy thereof is attached.

OR

B. ☐ A chain of title from the inventor(s), of the patent application/patent identified above, to the current assignee as shown below:

1. From:_____ To:_____
The document was recorded in the United States Patent and Trademark Office at Reel _____, Frame _____, or for which a copy thereof is attached.

2. From:_____ To:_____
The document was recorded in the United States Patent and Trademark Office at Reel _____, Frame _____, or for which a copy thereof is attached.

3. From:_____ To:_____
The document was recorded in the United States Patent and Trademark Office at Reel _____, Frame _____, or for which a copy thereof is attached.

☐ Additional documents in the chain of title are listed on a supplemental sheet.

☐ Copies of assignments or other documents in the chain of title are attached.

[**NOTE**: A separate copy (i.e., a true copy of the original document(s)) must be submitted to Assignment Division in accordance with 37 CFR Part 3, if the assignment is to be recorded in the records of the USPTO. See MPEP 302.08]

The undersigned (whose title is supplied below) is authorized to act on behalf of the assignee.

/hae-chan park/	February 23, 2009
Signature	Date
Hae-Chan Park, Reg. 50,114	703-288-5105
Printed or Typed Name	Telephone Number
Attorney	
Title	

This collection of information is required by 37 CFR 3.73(b). The information is required to obtain or retain a benefit by the public which is to file (and by the USPTO to process) an application. Confidentiality is governed by 35 U.S.C. 122 and 37 CFR 1.11 and 1.14. This collection is estimated to take 12 minutes to complete, including gathering, preparing, and submitting the completed application form to the USPTO. Time will vary depending upon the individual case. Any comments on the amount of time you require to complete this form and/or suggestions for reducing this burden, should be sent to the Chief Information Officer, U.S. Patent and Trademark Office, U.S. Department of Commerce, P.O. Box 1450, Alexandria, VA 22313-1450. DO NOT SEND FEES OR COMPLETED FORMS TO THIS ADDRESS. **SEND TO: Commissioner for Patents, P.O. Box 1450, Alexandria, VA 22313-1450.**

If you need assistance in completing the form, call 1-800-PTO-9199 and select option 2.

Electronic Acknowledgement Receipt

EFS ID:	4835883
Application Number:	11576882
International Application Number:	
Confirmation Number:	6820
Title of Invention:	Side Illumination Lens and Luminescent Device Using the Same
First Named Inventor/Applicant Name:	Do-Hyung Kim
Customer Number:	20575
Filer:	Hae-Chan Park/Wayne Helge
Filer Authorized By:	Hae-Chan Park
Attorney Docket Number:	3576-043
Receipt Date:	23-FEB-2009
Filing Date:	06-APR-2007
Time Stamp:	15:22:11
Application Type:	U.S. National Stage under 35 USC 371

Payment information:

Submitted with Payment	no

File Listing:

Document Number	Document Description	File Name	File Size(Bytes)/ Message Digest	Multi Part /.zip	Pages (if appl.)
1	Power of Attorney	Power_of_Attorney.pdf	161658 ce7dd2cea6e172feb8327f36c14a8b1a7df01ba8	no	2

Warnings:

Information:

Total Files Size (in bytes):	161658

This Acknowledgement Receipt evidences receipt on the noted date by the USPTO of the indicated documents, characterized by the applicant, and including page counts, where applicable. It serves as evidence of receipt similar to a Post Card, as described in MPEP 503.

New Applications Under 35 U.S.C. 111
If a new application is being filed and the application includes the necessary components for a filing date (see 37 CFR 1.53(b)-(d) and MPEP 506), a Filing Receipt (37 CFR 1.54) will be issued in due course and the date shown on this Acknowledgement Receipt will establish the filing date of the application.

National Stage of an International Application under 35 U.S.C. 371
If a timely submission to enter the national stage of an international application is compliant with the conditions of 35 U.S.C. 371 and other applicable requirements a Form PCT/DO/EO/903 indicating acceptance of the application as a national stage submission under 35 U.S.C. 371 will be issued in addition to the Filing Receipt, in due course.

New International Application Filed with the USPTO as a Receiving Office
If a new international application is being filed and the international application includes the necessary components for an international filing date (see PCT Article 11 and MPEP 1810), a Notification of the International Application Number and of the International Filing Date (Form PCT/RO/105) will be issued in due course, subject to prescriptions concerning national security, and the date shown on this Acknowledgement Receipt will establish the international filing date of the application.

UNITED STATES PATENT AND TRADEMARK OFFICE

UNITED STATES DEPARTMENT OF COMMERCE
United States Patent and Trademark Office
Address: COMMISSIONER FOR PATENTS
P.O. Box 1450
Alexandria, Virginia 22313-1450
www.uspto.gov

APPLICATION NUMBER	FILING OR 371(C) DATE	FIRST NAMED APPLICANT	ATTY. DOCKET NO./TITLE
11/576,882	04/06/2007	Do-Hyung Kim	3576-043

CONFIRMATION NO. 6820

POWER OF ATTORNEY NOTICE

20575
MARGER JOHNSON & MCCOLLOM, P.C.
210 SW MORRISON STREET, SUITE 400
PORTLAND, OR 97204

OC000000034738406

Date Mailed: 02/27/2009

NOTICE REGARDING CHANGE OF POWER OF ATTORNEY

This is in response to the Power of Attorney filed 02/23/2009.

- The Power of Attorney to you in this application has been revoked by the assignee who has intervened as provided by 37 CFR 3.71. Future correspondence will be mailed to the new address of record(37 CFR 1.33).

/vvan/

Office of Data Management, Application Assistance Unit (571) 272-4000, or (571) 272-4200, or 1-888-786-0101

UNITED STATES PATENT AND TRADEMARK OFFICE

UNITED STATES DEPARTMENT OF COMMERCE
United States Patent and Trademark Office
Address: COMMISSIONER FOR PATENTS
P.O. Box 1450
Alexandria, Virginia 22313-1450
www.uspto.gov

APPLICATION NUMBER	FILING OR 371(C) DATE	FIRST NAMED APPLICANT	ATTY. DOCKET NO./TITLE
11/576,882	04/06/2007	Do-Hyung Kim	3576-043

CONFIRMATION NO. 6820

POA ACCEPTANCE LETTER

58027
H.C. PARK & ASSOCIATES, PLC
8500 LEESBURG PIKE
SUITE 7500
VIENNA, VA 22182

OC000000034738427

Date Mailed: 02/27/2009

NOTICE OF ACCEPTANCE OF POWER OF ATTORNEY

This is in response to the Power of Attorney filed 02/23/2009.

The Power of Attorney in this application is accepted. Correspondence in this application will be mailed to the above address as provided by 37 CFR 1.33.

/vvan/

Office of Data Management, Application Assistance Unit (571) 272-4000, or (571) 272-4200, or 1-888-786-0101

UNITED STATES PATENT AND TRADEMARK OFFICE

UNITED STATES DEPARTMENT OF COMMERCE
United States Patent and Trademark Office
Address: COMMISSIONER FOR PATENTS
P.O. Box 1450
Alexandria, Virginia 22313-1450
www.uspto.gov

APPLICATION NO.	FILING DATE	FIRST NAMED INVENTOR	ATTORNEY DOCKET NO.	CONFIRMATION NO.
11/576,882	04/06/2007	Do-Hyung Kim	P2745US00	6820

58027 7590 06/01/2009
H.C. PARK & ASSOCIATES, PLC
8500 LEESBURG PIKE
SUITE 7500
VIENNA, VA 22182

EXAMINER
DUNWIDDIE, MEGHAN K

ART UNIT	PAPER NUMBER
2875	

NOTIFICATION DATE	DELIVERY MODE
06/01/2009	ELECTRONIC

Please find below and/or attached an Office communication concerning this application or proceeding.

The time period for reply, if any, is set in the attached communication.

Notice of the Office communication was sent electronically on above-indicated "Notification Date" to the following e-mail address(es):

PATENT@PARK-LAW.COM

Office Action Summary	Application No.	Applicant(s)	
	11/576,882	KIM ET AL.	
	Examiner	Art Unit	
	MEGHAN K. DUNWIDDIE	2875	

-- The MAILING DATE of this communication appears on the cover sheet with the correspondence address --

Period for Reply

A SHORTENED STATUTORY PERIOD FOR REPLY IS SET TO EXPIRE 3 MONTH(S) OR THIRTY (30) DAYS, WHICHEVER IS LONGER, FROM THE MAILING DATE OF THIS COMMUNICATION.

- Extensions of time may be available under the provisions of 37 CFR 1.136(a). In no event, however, may a reply be timely filed after SIX (6) MONTHS from the mailing date of this communication.
- If NO period for reply is specified above, the maximum statutory period will apply and will expire SIX (6) MONTHS from the mailing date of this communication.
- Failure to reply within the set or extended period for reply will, by statute, cause the application to become ABANDONED (35 U.S.C. § 133). Any reply received by the Office later than three months after the mailing date of this communication, even if timely filed, may reduce any earned patent term adjustment. See 37 CFR 1.704(b).

Status

1)☐ Responsive to communication(s) filed on _____.

2a)☐ This action is **FINAL**. 2b)☒ This action is non-final.

3)☐ Since this application is in condition for allowance except for formal matters, prosecution as to the merits is closed in accordance with the practice under *Ex parte Quayle*, 1935 C.D. 11, 453 O.G. 213.

Disposition of Claims

4)☒ Claim(s) 1-15 is/are pending in the application.

4a) Of the above claim(s) _____ is/are withdrawn from consideration.

5)☐ Claim(s) _____ is/are allowed.

6)☒ Claim(s) 1-15 is/are rejected.

7)☐ Claim(s) _____ is/are objected to.

8)☐ Claim(s) _____ are subject to restriction and/or election requirement.

Application Papers

9)☐ The specification is objected to by the Examiner.

10)☐ The drawing(s) filed on _____ is/are: a)☐ accepted or b)☐ objected to by the Examiner.

Applicant may not request that any objection to the drawing(s) be held in abeyance. See 37 CFR 1.85(a).

Replacement drawing sheet(s) including the correction is required if the drawing(s) is objected to. See 37 CFR 1.121(d).

11)☐ The oath or declaration is objected to by the Examiner. Note the attached Office Action or form PTO-152.

Priority under 35 U.S.C. § 119

12)☒ Acknowledgment is made of a claim for foreign priority under 35 U.S.C. § 119(a)-(d) or (f).

a)☒ All b)☐ Some * c)☐ None of:

1.☒ Certified copies of the priority documents have been received.

2.☐ Certified copies of the priority documents have been received in Application No. _____.

3.☐ Copies of the certified copies of the priority documents have been received in this National Stage application from the International Bureau (PCT Rule 17.2(a)).

* See the attached detailed Office action for a list of the certified copies not received.

Attachment(s)

1) ☐ Notice of References Cited (PTO-892)

2) ☐ Notice of Draftsperson's Patent Drawing Review (PTO-948)

3) ☒ Information Disclosure Statement(s) (PTO/SB/08) Paper No(s)/Mail Date 04/06/07, 04/27/07, 08/29/08 .

4) ☐ Interview Summary (PTO-413) Paper No(s)/Mail Date. _____ .

5) ☐ Notice of Informal Patent Application

6) ☐ Other: _____.

DETAILED ACTION

This Office Action is a Non-Final Rejection in response to the application filed on April 6, 2007 by **Kim** et al.

Priority

1. Receipt is acknowledged of papers submitted under 35 U.S.C. 119(a)-(d), which papers have been placed of record in the file.

Information Disclosure Statement

2. The information disclosure statements (IDS) submitted on April 6, 2007, April 27, 2007 and August 29, 2008 are in compliance with the provisions of 37 CFR 1.97, and accordingly, the information disclosure statements have been considered by the examiner.

Claim Rejections - 35 USC § 102

3. The following is a quotation of the appropriate paragraphs of 35 U.S.C. 102 that form the basis for the rejections under this section made in this Office action:

> A person shall be entitled to a patent unless –
>
> (b) the invention was patented or described in a printed publication in this or a foreign country or in public use or on sale in this country, more than one year prior to the date of application for patent in the United States.

4. Claims 1-7 are rejected under 35 U.S.C. 102(b) as being anticipated by **West** et al. (US 6598998).

5. In reference to Claim 1, **West** et al. shows a lens, comprising:

- A body [Figure 5D];
- A total reflection surface with a total reflection slop with respect to a central axis of the body [Figure 5F: (58 and 53)];
- And a linear and/or curved refractive surface formed to extend from a periphery of the total reflection surface [Figure 5D: (56)].

6. In reference to Claim 2, **West** et al. shows:

- The refractive surface comprises a linear refractive surface formed by being bent at the periphery of the total reflection surface; and a curved refractive surface formed to extend from a periphery of the linear refractive surface [Figure 5D: (56 and 58)].

7. In reference to Claim 3, **West** et al. shows:

- The refractive surface comprises a curved refractive surface formed to extend from the periphery of the total reflection surface; and a linear refractive surface formed by being bent at a periphery of the curved refractive surface [Figure 5D: (56 and 58)].

8. In reference to Claim 4, **West** et al. shows:

- The curved refractive surface takes the shape of an ellipse, and a ratio of minor and major axes of the ellipse is 1:4 or less [Figure 5D: (58)].

9. In reference to Claim 5, **West** et al. shows:

- The linear refractive surface is bent more than once [Figure 5D: (56)].

10. In reference to Claim 6, **West** et al. shows:

- The total reflection surface comprises a first total reflection surface having a section in the form of a V-shaped recess with a predetermined slope; and a second total reflection surface extending upward from a periphery of the first total reflection surface and formed to be sloped with a gradient smaller than that of the first total reflection surface [Figure 5F: (lower part and outer part of 58)].

11. In reference to Claim 7, **West** et al. shows:

- The refractive index of the body is 1.2 to 2.0 [See column 3 lines 49-52].

Claim Rejections - 35 USC § 103

12. The following is a quotation of 35 U.S.C. 103(a) which forms the basis for all obviousness rejections set forth in this Office action:

> (a) A patent may not be obtained though the invention is not identically disclosed or described as set forth in section 102 of this title, if the differences between the subject matter sought to be patented and the prior art are such that the subject matter as a whole would have been obvious at the time the invention was made to a person having ordinary skill in the art to which said subject matter pertains. Patentability shall not be negatived by the manner in which the invention was made.

13. Claims 8-15 are rejected under 35 U.S.C. 103(a) as being unpatentable over **Carey** et al. (US 6274924) in view of **West** et al. (US 6598998).

14. Regarding Claim 8, **Carey** et al. shows a luminescent device, comprising:

- A package housing with an opening and a through hole exposed by the opening [Figure 2];
- A lead terminal having an inner portion exposed within the opening of the package housing and an outer portion extending from the inner portion and protruding to the outside of the package housing [Figure 2: (12)];
- A heat sink coupled to a lower portion of the package housing and having a portion exposed through the opening [Figure 2: (10 and 18)];
- A lens including a total refection surface encapsulating the package housing [Figure 2: (20)].

15. Regarding Claim 9, **Carey** et al. shows:

- The package housing comprises first and second housing mutually coupled to each other with the lead terminal interposed therebetween, and the opening is formed in the first housing [Figure 2: (12 and 10)].

16. Regarding Claim 10, **Carey** et al. shows:

- The heat sink comprises a heat sink body corresponding to a bottom surface of the package housing; and an insertion projection protruding upward from a central portion of the heat sink body and inserted into the through hole of the package housing [Figure 2: (10 and 18)].

17. Regarding Claim 11, **Carey** et al. shows:

- The heat sink has a coupling projection on at least one of the heat sink body and the insertion projection [Figure 2: (18)].

18. **Carey** et al. does not show:

- A lens having a total reflection slope and a refractive surface formed to extend from a periphery of the total reflection surface.

19. **West** et al. teaches:

- A lens having a total reflection slope and a refractive surface formed to extend from a periphery of the total reflection surface [Figure 5D: (58 and 56)].

20. It would have been obvious for one of ordinary skill in the art, at the time of the invention to provide the luminescent device of **Carey** et al. with a lens as taught by **West** et al. for the purpose and advantage of directing the emitted light in a particular direction.

21. Regarding Claim 12, **Carey** et al. shows a luminescent device, comprising:

- A heat sink support ring [Figure 2: (14)];
- A heat sink inserted into the support ring [Figure 2: (18)];
- At least two lead terminals arranged at both sides of the support ring while being space apart from the support ring and the heat sink [Figure 2: (12)];

- A package body for molding the heat sink and the lead terminals to support them, the package body having an opening through which an upper portion of the heart sink ad portions of the lead terminals are exposed [Figure 2];
- And a lens [Figure 2: (20)].

22. Regarding Claim 13, **Carey** et al. shows:

- The heat sink has a base and a projection protruding upward from the base at the center thereof, and the projection is inserted into the support ring [Figure 2: (10 and 14)].

23. Regarding Claim 14, **Carey** et al. shows:

- The heat sink further comprises a support ring receiving groove in a side surface of the projection so that the support ring receiving groove can be fastened to the support ring [Figure 2: (14)].

24. Regarding Claim 15, **Carey** et al. shows:

- The package body is plastic resin body formed by insert-molding a thermosetting or thermoplastic resin after the heat sink is inserted into the support ring [Figure 2: (12)].

25. **Carey** et al. does not show:

- A lens including a total reflection surface encapsulating the package body and having a total reflection slope, and a refractive surface formed to extend from a periphery edge of the total reflection surface.

26. **West** et al. teaches:

- A lens including a total reflection surface encapsulating the package body and having a total reflection slope, and a refractive surface formed to extend from a periphery edge of the total reflection surface [Figure 5D: (58 and 56)].

27. It would have been obvious for one of ordinary skill in the art, at the time of the invention to provide the luminescent device of **Carey** et al. with a lens as taught by **West** et al. for the purpose and advantage of directing the emitted light in a particular direction.

Conclusion

Any inquiry concerning this communication or earlier communications from the examiner should be directed to MEGHAN K. DUNWIDDIE whose telephone number is (571)272-8543. The examiner can normally be reached on Monday through Friday 8 am-4:30 pm.

If attempts to reach the examiner by telephone are unsuccessful, the examiner's supervisor, Sandra O'Shea can be reached on (571)272-2378. The fax phone number for the organization where this application or proceeding is assigned is 571-273-8300.

Information regarding the status of an application may be obtained from the Patent Application Information Retrieval (PAIR) system. Status information for published applications may be obtained from either Private PAIR or Public PAIR. Status information for unpublished applications is available through Private PAIR only. For more information about the PAIR system, see http://pair-direct.uspto.gov. Should you have questions on access to the Private PAIR system, contact the Electronic Business Center (EBC) at 866-217-9197 (toll-free). If you would like assistance from a USPTO Customer Service Representative or access to the automated information system, call 800-786-9199 (IN USA OR CANADA) or 571-272-1000.

/Sandra L. O'Shea/
Supervisory Patent Examiner, Art Unit 2875

MKD

Index of Claims	Application/Control No.	Applicant(s)/Patent Under Reexamination
	11576882	KIM ET AL.
	Examiner	**Art Unit**
	MEGHAN K DUNWIDDIE	2875

✓	Rejected	-	Cancelled	N	Non-Elected	A	Appeal
=	Allowed	÷	Restricted	I	Interference	O	Objected

☐ Claims renumbered in the same order as presented by applicant ☐ CPA ☐ T.D. ☐ R.1.47

CLAIM		DATE								
Final	Original	05/21/2009								
	1	✓								
	2	✓								
	3	✓								
	4	✓								
	5	✓								
	6	✓								
	7	✓								
	8	✓								
	9	✓								
	10	✓								
	11	✓								
	12	✓								
	13	✓								
	14	✓								
	15	✓								

Search Notes	Application/Control No.	Applicant(s)/Patent Under Reexamination
	11576882	KIM ET AL.
	Examiner	**Art Unit**
	MEGHAN K DUNWIDDIE	2875

SEARCHED

Class	Subclass	Date	Examiner
362	84,307-310,326-329,800	05/21/2009	MKD
257	98-100	05/21/2009	MKD

SEARCH NOTES

Search Notes	Date	Examiner
EAST-(US-PGPUB; USPAT; USOCR; EPO; JPO)--See Attached Search History.	05/21/2009	MKD

INTERFERENCE SEARCH

Class	Subclass	Date	Examiner

EAST Search History

Ref #	Hits	Search Query	DBs	Default Operator	Plurals	Time Stamp
S1	8	(("6598998") or ("20020044454") or ("6274924") or ("6623150") or ("20020163810") or ("20040140543") or ("6607286") or ("6679621")).PN.	US-PGPUB; USPAT; USOCR; EPO; JPO	OR	OFF	2009/05/20 17:33
S2	1520	362/84.ccls.	US-PGPUB; USPAT; USOCR; EPO; JPO	OR	ON	2009/05/21 17:25
S3	1	"20070284993".pn.	US-PGPUB; USPAT; USOCR; EPO; JPO	OR	ON	2009/05/21 17:26
S4	7243	257/98-100.ccls.	US-PGPUB; USPAT; USOCR; EPO; JPO	OR	ON	2009/05/21 17:26
S5	1150	362/307.ccls.	US-PGPUB; USPAT; USOCR; EPO; JPO	OR	ON	2009/05/21 17:26
S6	0	362/308/310.ccls.	US-PGPUB; USPAT; USOCR; EPO; JPO	OR	ON	2009/05/21 17:27
S7	2659	362/308-310.ccls.	US-PGPUB; USPAT; USOCR; EPO; JPO	OR	ON	2009/05/21 17:27
S8	9	362/326-329	US-PGPUB; USPAT; USOCR; EPO; JPO	OR	ON	2009/05/21 17:27
S9	371	362/326.ccls.	US-PGPUB; USPAT; USOCR; EPO; JPO	OR	ON	2009/05/21 17:28

S10	1919	362/326-329.ccls.	US-PGPUB; USPAT; USOCR; EPO; JPO	OR	ON	2009/05/21 17:28
S11	2443	362/800.ccls.	US-PGPUB; USPAT; USOCR; EPO; JPO	OR	ON	2009/05/21 17:29
S12	1349	362/373.ccls.	US-PGPUB; USPAT; USOCR; EPO; JPO	OR	ON	2009/05/21 17:29

5/22/2009 11:37:15 AM
C:\Documents and Settings\mdunwiddie\My Documents\EAST\Workspaces\11576882 Side illumination lens and luminescent device using the same.wsp

UNITED STATES PATENT AND TRADEMARK OFFICE

UNITED STATES DEPARTMENT OF COMMERCE
United States Patent and Trademark Office
Address: COMMISSIONER FOR PATENTS
P.O. Box 1450
Alexandria, Virginia 22313-1450
www.uspto.gov

BIB DATA SHEET

CONFIRMATION NO. 6820

SERIAL NUMBER	FILING or 371(c) DATE	CLASS	GROUP ART UNIT	ATTORNEY DOCKET NO.
11/576,882	04/06/2007 **RULE**	359	2875	P2745US00

APPLICANTS

Do-Hyung Kim, Suwon, KOREA, REPUBLIC OF;
Chung-Hoon Lee, Gyeonggi-do, KOREA, REPUBLIC OF;
Keon-Young Lee, Ansan, KOREA, REPUBLIC OF;
Kwang-Il Park, Seoul, KOREA, REPUBLIC OF;

**** CONTINUING DATA ****************************

This application is a 371 of PCT/KR05/03346 10/07/2005

**** FOREIGN APPLICATIONS ****************************

REPUBLIC OF KOREA 2004-0079909 10/07/2004
REPUBLIC OF KOREA 2005-0000269 01/03/2005
REPUBLIC OF KOREA 2005-0056436 06/28/2005
REPUBLIC OF KOREA 2005-0083743 09/08/2005

**** IF REQUIRED, FOREIGN FILING LICENSE GRANTED ****

09/04/2007

Foreign Priority claimed ☑ Yes ☐ No 35 USC 119(a-d) conditions met ☑ Yes ☐ No Verified and Acknowledged /MEGHAN K DUNWIDDIE/ Examiner's Signature ☐ Met after Allowance Initials	STATE OR COUNTRY KOREA, REPUBLIC OF	SHEETS DRAWINGS 24	TOTAL CLAIMS 15	INDEPENDENT CLAIMS 3

ADDRESS

H.C. PARK & ASSOCIATES, PLC
8500 LEESBURG PIKE
SUITE 7500
VIENNA, VA 22182
UNITED STATES

TITLE

Side Illumination Lens and Luminescent Device Using the Same

FILING FEE RECEIVED 1260	FEES: Authority has been given in Paper No._____ to charge/credit DEPOSIT ACCOUNT No._____ for following:	☐ All Fees ☐ 1.16 Fees (Filing) ☐ 1.17 Fees (Processing Ext. of time) ☐ 1.18 Fees (Issue) ☐ Other _____ ☐ Credit

BIB (Rev. 05/07).

PATENT APPLICATION
Attorney's Doc. No.: 3576-043
Client Ref. No.: PO070028

IN THE UNITED STATES PATENT AND TRADEMARK OFFICE

In re application of: Do-Hyung KIM, et al.

Serial No.: ~~Not yet assigned~~ 11/576882 Group Art Unit: ~~Not yet assigned~~ 2875

Filed: April 6, 2007 Examiner: ~~Not yet assigned~~ Meghan Dunwiddie

For: SIDE-LUMINESCENCE LENS AND LUMINESCENT DEVICE USING THE SAME

INFORMATION DISCLOSURE CITATION
FORM PTO-1449 (Modified)

U.S. PATENT DOCUMENTS

Exam Init	Ref	Document Number	Issue Date	Name	Class	Sub Class
/M.D./		6,274,924	Aug. 14, 01	Carey et al.		
/M.D./		6,598,998	Jul. 29, 03	West et al.		
/M.D./		6,607,286	Aug. 19, 03	West et al.		
/M.D./		6,679,621	Jan. 20, 04	West et al.		
/M.D./		2002/0044454	Apr. 18, 02	Roller et al.		

FOREIGN PATENT DOCUMENTS

Exam Init	Ref	Document Number	Publication Date	Country	Name
/M.D./		6-201996	Jul. 22, 94	Japan	Kitagawa Seiichiro
/M.D./		2004-221598	Aug. 5, 04	Japan	Elpedes Cresente S. et al.

OTHER DOCUMENTS

Exam Init	Ref	Author, Title, Date, Pertinent Pages, etc.
/M.D./		English language abstract of Japanese Publication No. 6-201996
/M.D./		English language abstract of Japanese Publication No. 2004-221598

Examiner: /Meghan Dunwiddie/

Date Considered: 05/22/2009

Receipt date: 04/27/2007

PTO/SB/08a (08-03)
Approved for use through 07/31/2006. OMB 0651-0031
U.S. Patent and Trademark Office; U.S. DEPARTMENT OF COMMERCE
Under the Paperwork Reduction Act of 1995, no persons are required to respond to a collection of information unless it contains a valid OMB control number.

INFORMATION DISCLOSURE STATEMENT BY APPLICANT (**Not for submission under 37 CFR 1.99)**	Application Number	11576882
	Filing Date	2007-04-06
	First Named Inventor	Do-Hyung KIM
	Art Unit	2875
	Examiner Name	Meghan Dunwiddie
	Attorney Docket Number	3576-043

U.S.PATENTS Remove

Examiner Initial*	Cite No	Patent Number	Kind Code[1]	Issue Date	Name of Patentee or Applicant of cited Document	Pages,Columns,Lines where Relevant Passages or Relevant Figures Appear
/M.D./	1	6598998		2003-07-29	West et al.	

If you wish to add additional U.S. Patent citation information please click the Add button. Add

U.S.PATENT APPLICATION PUBLICATIONS Remove

Examiner Initial*	Cite No	Publication Number	Kind Code[1]	Publication Date	Name of Patentee or Applicant of cited Document	Pages,Columns,Lines where Relevant Passages or Relevant Figures Appear
	1					

If you wish to add additional U.S. Published Application citation information please click the Add button. Add

FOREIGN PATENT DOCUMENTS Remove

Examiner Initial*	Cite No	Foreign Document Number[3]	Country Code[2] ¡	Kind Code[4]	Publication Date	Name of Patentee or Applicant of cited Document	Pages,Columns,Lines where Relevant Passages or Relevant Figures Appear	T[5]
	1							☐

If you wish to add additional Foreign Patent Document citation information please click the Add button Add

NON-PATENT LITERATURE DOCUMENTS Remove

Examiner Initials*	Cite No	Include name of the author (in CAPITAL LETTERS), title of the article (when appropriate), title of the item (book, magazine, journal, serial, symposium, catalog, etc), date, pages(s), volume-issue number(s), publisher, city and/or country where published.	T[5]

INFORMATION DISCLOSURE STATEMENT BY APPLICANT (Not for submission under 37 CFR 1.99)	Application Number	11576882
	Filing Date	2007-04-06
	First Named Inventor	Do-Hyung KIM
	Art Unit	2875
	Examiner Name	Meghan Dunwiddie
	Attorney Docket Number	3576-043

	1		☐

If you wish to add additional non-patent literature document citation information please click the Add button Add

EXAMINER SIGNATURE

Examiner Signature	/Meghan Dunwiddie/	Date Considered	05/22/2009

*EXAMINER: Initial if reference considered, whether or not citation is in conformance with MPEP 609. Draw line through a citation if not in conformance and not considered. Include copy of this form with next communication to applicant.

[1] See Kind Codes of USPTO Patent Documents at www.USPTO.GOV or MPEP 901.04. [2] Enter office that issued the document, by the two-letter code (WIPO Standard ST.3). [3] For Japanese patent documents, the indication of the year of the reign of the Emperor must precede the serial number of the patent document. [4] Kind of document by the appropriate symbols as indicated on the document under WIPO Standard ST.16 if possible. [5] Applicant is to place a check mark here if English language translation is attached.

Receipt date: 08/29/2008

Doc code :IDS
Doc description: Information Disclosure Statement (IDS) Filed

PTO/SB/08a (08-08)
Approved for use through 09/30/2008. OMB 0651-0031
U.S. Patent and Trademark Office; U.S. DEPARTMENT OF COMMERCE
Under the Paperwork Reduction Act of 1995, no persons are required to respond to a collection of information unless it contains a valid OMB control number.

INFORMATION DISCLOSURE STATEMENT BY APPLICANT (**Not for submission under 37 CFR 1.99)**	Application Number	11576882
	Filing Date	2007-04-06
	First Named Inventor	Do Hyung Kim
	Art Unit	~~2873~~ 2875
	Examiner Name	Meghan Dunwiddie
	Attorney Docket Number	3576-043

U.S.PATENTS Remove

Examiner Initial*	Cite No	Patent Number	Kind Code[1]	Issue Date	Name of Patentee or Applicant of cited Document	Pages,Columns,Lines where Relevant Passages or Relevant Figures Appear
	1					

If you wish to add additional U.S. Patent citation information please click the Add button. Add

U.S.PATENT APPLICATION PUBLICATIONS Remove

Examiner Initial*	Cite No	Publication Number	Kind Code[1]	Publication Date	Name of Patentee or Applicant of cited Document	Pages,Columns,Lines where Relevant Passages or Relevant Figures Appear
	1					

If you wish to add additional U.S. Published Application citation information please click the Add button. Add

FOREIGN PATENT DOCUMENTS Remove

Examiner Initial*	Cite No	Foreign Document Number[3]	Country Code[2] ¡	Kind Code[4]	Publication Date	Name of Patentee or Applicant of cited Document	Pages,Columns,Lines where Relevant Passages or Relevant Figures Appear	T[5]
/M.D./	1	2000150967	JP		2000-05-30	Carey et al.		☐
/M.D./	2	2001185763	JP		2001-07-06	Uchihara et al.		☐
/M.D./	3	2002252373	JP		2002-09-06	Nagai et al.		☐

EFS Web 2.1.5

INFORMATION DISCLOSURE STATEMENT BY APPLICANT (Not for submission under 37 CFR 1.99)		
	Application Number	11576882
	Filing Date	2007-04-06
	First Named Inventor	Do Hyung Kim
	Art Unit	~~2873~~ 2875
	Examiner Name	Meghan Dunwiddie
	Attorney Docket Number	3576-043

If you wish to add additional Foreign Patent Document citation information please click the Add button [Add]

NON-PATENT LITERATURE DOCUMENTS [Remove]

Examiner Initials*	Cite No	Include name of the author (in CAPITAL LETTERS), title of the article (when appropriate), title of the item (book, magazine, journal, serial, symposium, catalog, etc), date, pages(s), volume-issue number(s), publisher, city and/or country where published.	T[5]
	1		☐

If you wish to add additional non-patent literature document citation information please click the Add button [Add]

EXAMINER SIGNATURE

Examiner Signature	/Meghan Dunwiddie/	Date Considered	05/22/2009

*EXAMINER: Initial if reference considered, whether or not citation is in conformance with MPEP 609. Draw line through a citation if not in conformance and not considered. Include copy of this form with next communication to applicant.

[1] See Kind Codes of USPTO Patent Documents at www.USPTO.GOV or MPEP 901.04. [2] Enter office that issued the document, by the two-letter code (WIPO Standard ST.3). [3] For Japanese patent documents, the indication of the year of the reign of the Emperor must precede the serial number of the patent document. [4] Kind of document by the appropriate symbols as indicated on the document under WIPO Standard ST.16 if possible. [5] Applicant is to place a check mark here if English language translation is attached.

IN THE UNITED STATES PATENT AND TRADEMARK OFFICE

In re Patent Application of:	Docket No.: P2745US00
Do-Hyung KIM, *et al.*	
Serial No.: 11/576,882	Group Art Unit: 2875
Confirmation No.: 6820	
Filed: April 6, 2007	Examiner: DUNWIDDIE, Meghan K.

For: **SIDE ILLUMINATION LENS AND LUMINESCENT DEVICE USING THE SAME**

Mail Stop: Amendment
Commissioner for Patents
P.O. Box 1450
Alexandria, VA 22313-1450

REPLY UNDER 37 C.F.R. § 1.111

Sir:

In response to the Non-Final Office Action of June 1, 2009 ("Office Action"), Applicants respectfully request reconsideration of the application in view of the following Amendments and Remarks.

Amendments to the Specification begin on page 2.

Amendments to the Claims begin on page 6.

Remarks begin on page 10.

Applicants believe that no extensions of time are required at this time. If extensions of time are necessary to prevent abandonment of this application, then such extensions of time are hereby petitioned for under 37 C.F.R. § 1.136(a). Applicants believe that no further fees for net addition of claims are required at this time. Any fees required for further extensions of time and any fees for the net addition of claims are hereby authorized to be charged to our Deposit Account No. 50-3698.

AMENDMENTS TO THE SPECIFICATION

In the Specification:

Please replace paragraph [4] with the following amended paragraph:

[4] However, since the direction of light emitted by a light emitting diode is random, the light should be induced in a desired direction to be used as an illumination device and a backlight. To induce light in the prior art, as shown in FIG. [[1a]] 1, a luminescent chip 11 is mounted on a substrate 10, molding is performed to form a convex lens 12 over the luminescent chip 11, and a pattern 13 for diffused reflection is formed on the surface of the convex lens 12 so that light can be spread widely. As shown in FIG. [[1b]] 2, reflection cups 14 are formed at both sides of the luminescent chip 11 to enhance focusing of light. Since the aforementioned luminescent device mainly emits light forward rather than sideward, there is a problem in that it is difficult to apply the luminescent device to a backlight which should widely emit light sideward.

Please replace paragraph [65] with the following amended paragraph:

[65] At this time, as described above, each of the slopes of the reflection surfaces 121 and 122 should be set such that an angle defined by the total reflection surface and light emitted from the luminescent chip 110 and incident on the total reflection surface becomes greater than a critical angle. That is, since the critical angle varies depending on a refractive index of the lens 120, the lens 120 of this embodiment is made of a material with a refractive index of 1.2 to 2.0 so [[hat]] that the critical angle becomes 30 to 60 degrees.

Please replace paragraph [67] with the following amended paragraph:

[67] Accordingly, as shown in FIG. 6, light that is incident from a light source (luminescent chip) in a range of ±40 to ±45 with respect to an x-axis direction (vertical direction)

is totally reflected on the first and second total reflection surfaces 121 and 122 toward sides of the lens 120 (in a horizontal direction), and then emitted in a y-axis direction through the single elliptical refractive surface 123. Meanwhile, light that is incident out of the range of ±40 to ±45 degrees with respect to the x-axis direction is immediately refracted through the curved refractive surface 123 and then emitted in the y-axis direction. In this embodiment, based on about 42 degrees, light is totally reflected on the total reflection surfaces 121 and 122 and then emitted through the refractive surface at the side of the lens, or the light is emitted through the refractive surface without ~~passing through~~ being reflected by the total reflection surfaces 121 and 122.

Please replace paragraph [68] with the following amended paragraph:

[68] As such, the lens 120 of the present invention is constructed to have the total reflection surfaces with different slopes with respect to a central axis and the curved refractive surface 123 at the periphery of the lens, so that a peak value of luminous intensity is located in a range of ±10 with respect to ±80 as shown in FIGS. [[7,8]] 7, 8 and 9. Further, the luminous intensity at zero degrees is minimized to be 0 to 20% of the peak value. Preferably, it is minimized to be 5 to 10% of the peak value.

Please replace paragraph [97] with the following amended paragraph:

[97] Further, an outer surface of the insertion projection 340 of the heat sink 330 ~~co nstituting~~ constituting the luminescent device is formed with a latching step 340a to be fixedly inserted into a groove formed in a wall defining the through-hole 350 in the second package housing 310, so that the insertion projection 340 of the heat sink 330 can be firmly fixed to the through-hole 350 of the second package housing 310. The latching step 340a may be formed on the body of the heat sink. The latching step 340a may be formed at an edge of an uppermost

portion of the insertion projection 340 of the heat sink 330. At this time, the latching step 340a is coupled to the upper surface of the second package housing 310, thereby fixing the heat sink 330.

Please replace paragraph [120] with the following amended paragraph:

[120] Meanwhile, if the support ring-receiving groove 630a is formed, the support ring 530 is received in the support ring-receiving groove 630a and supports the heat sink 600. At this time, it is preferred that a portion of the support ring 530 be received in the support ring-receiving groove 630a, and the remainder thereof protrude to an outer surface of the projection 630, as shown in figure. Further, if the support ring-receiving groove 630a <u>is</u> a spiral groove, the heat sink 600 can be screwed and fastened to the support ring 530.

Please replace paragraph [146] with the following amended paragraph:

[146] In addition thereto, the package body 700 supports the heat sink 600 and the lead terminals by means of molding. The package body 700 has the opening through which the upper end of the heat sink 600 and some portions of the lead terminals are exposed at the upper portion of the package body. Meanwhile, the portions of the lead terminals protruding outward through the sidewall of the package body 700 <u>help prevent the heat sink 600 from being separated from the package body 700</u>.

Please replace paragraph [187] with the following amended paragraph:

[187] FIG. 37 is a conceptual sectional view of a luminescent device with a lens according to a fourth embodiment of the present invention, FIG. 38 is a perspective view of the lens according to the fourth embodiment, FIG. 39 is a conceptual view illustrating the operation

of the total internal reflection lens according to the fourth embodiment, and FIG. [[30]] 40 is a graph showing simulation results of the luminescent device according to the fourth embodiment.

Please replace paragraph [204] with the following amended paragraph:

[204] As such, the lens [[120]] 4120 of the present invention is formed to have the total reflection surfaces with different slopes at a central portion thereof, and the rounded surface and the plurality of horizontal and vertical surfaces at an edge thereof, so that a peak value of luminous intensity is in a range of ±10 with respect to ±70 as shown in FIG. 44.

AMENDMENTS TO THE CLAIMS

Please **AMEND** claims 1, 8, and 12 as shown below.

This listing of claims will replace all prior versions, and listings, of claims in the application.

1. (Currently amended) A lens, comprising:

a body;

a total reflection surface with a total reflection slope with respect to a central axis of the body; and

a linear and/or curved refractive surface(s) formed to extend away from the central axis and beyond a periphery of the total reflection surface.

2. (Original) The lens as claimed in claim 1, wherein the refractive surface comprises:

a linear refractive surface formed by being bent at the periphery of the total reflection surface; and

a curved refractive surface formed to extend from a periphery of the linear refractive surface.

3. (Original) The lens as claimed in claim 1, wherein the refractive surface comprises:

a curved refractive surface formed to extend from the periphery of the total reflection surface; and

a linear refractive surface formed by being bent at a periphery of the curved refractive surface.

4. (Original) The lens as claimed in any one of claims 1 to 3, wherein the curved refractive surface takes the shape of an ellipse, and a ratio of minor and major axes of the ellipse is 1:4 or less.

5. (Original) The lens as claimed in any one of claims 1 to 3, wherein the linear refractive surface is bent more than once.

6. (Original) The lens as claimed in claim 1, wherein the total reflection surface comprises:

a first total reflection surface having a section in the form of a V-shaped recess with a predetermined slope; and

a second total reflection surface extending upward from a periphery of the first total reflection surface and formed to be sloped with a gradient smaller than that of the first total reflection surface.

7. (Original) The lens as claimed in claim 1, wherein the refractive index of the body is 1.2 to 2.0.

8. (Currently amended) A luminescent device, comprising:

a package housing with an opening and a through-hole exposed by the opening;

a lead terminal having an inner portion exposed within the opening of the package housing and an outer portion extending from the inner portion and protruding to the outside of the package housing;

a heat sink coupled to a lower portion of the package housing and having a portion exposed through the opening; and

a lens including a total reflection surface encapsulating the package housing and having a total reflection slope with respect to a central axis of a body of the lens, and a refractive surface formed to extend away from the central axis and beyond a periphery of the total reflection surface.

9. (Original) The luminescent device as claimed in claim 8, wherein the package housing comprises first and second housings mutually coupled to each other with the lead terminal interposed therebetween, and the opening is formed in the first housing.

10. (Original) The luminescent device as claimed in claim 8, wherein the heat sink comprises:

a heat sink body corresponding to a bottom surface of the package housing; and

an insertion projection protruding upward from a central portion of the heat sink body and inserted into the through-hole of the package housing.

11. (Original) The luminescent device as claimed in claim 10, wherein the heat sink has a coupling projection on at least one of the heat sink body and the insertion projection.

12. (Currently amended) A luminescent device, comprising:

a heat sink support ring;

a heat sink inserted into the support ring;

at least two lead terminals arranged at both sides of the support ring while being spaced apart from the support ring and the heat sink;

a package body for molding the heat sink and the lead terminals to support them, the package body having an opening through which an upper portion of the heat sink and portions of the lead terminals are exposed; and

a lens including a total reflection surface encapsulating the package body and having a total reflection slope with respect to a central axis of a body of the lens, and a refractive surface formed to extend away from the central axis and beyond a periphery edge of the total reflection surface.

13. (Original) The luminescent device as claimed in claim 12, wherein the heat sink has a base and a projection protruding upward from the base at the center thereof, and the projection is inserted into the support ring.

14. (Original) The luminescent device as claimed in claim 13, wherein the heat sink further comprises a support ring-receiving groove in a side surface of the projection so that the support ring-receiving groove can be fastened to the support ring.

15. (Original) The luminescent device as claimed in claim 12, wherein the package body is a plastic resin body formed by insert-molding a thermosetting or thermoplastic resin after the heat sink is inserted into the support ring.

REMARKS

By this amendment, claims 1, 8, and 12 have been amended. The specification has been amended solely for the purposes of informality correction, better wording, and clarification. Accordingly, claims 1-15 are currently pending in the application, of which claims 1, 8, and 12 are independent.

Applicants respectfully submit that the above amendments do not add new matter to the application and are fully supported by the specification. Support for the amendments may be found at least in Figures 4-6, 15C, 26-31, 33-35, 37-39, and 41-43 and paragraph [73] of the specification.

In view of the above amendments and the following Remarks, Applicants respectfully request reconsideration and timely withdrawal of the pending objections and rejections.

Rejections Under 35 U.S.C. § 102

Claims 1-7 stand rejected under 35 U.S.C. § 102(b) as being allegedly anticipated by U.S. Patent No. 6,598,998 issued to West, *et al.* ("West").

In order for a rejection under 35 U.S.C. § 102(b) to be proper, a single reference must disclose every claimed feature. To be patentable, a claim need only recite a single novel feature that is not disclosed in the cited reference. Thus, the failure of a cited reference to disclose one or more claimed features renders the 35 U.S.C. § 102(b) rejection improper.

Applicants respectfully submit that the rejection of claim 1 must be withdrawn because West fails to disclose every claimed feature. Amended claim 1 recites, *inter alia*:

> a total reflection surface with a total reflection slope with respect to a central axis of the body; and
>
> a linear and/or curved refractive surface(s) formed to extend away from the central axis and beyond a periphery of the total reflection surface

West fails to disclose or suggest a lens including both of these features because West's refractive portion 56 does not extend away from the central axis and beyond a periphery of the total internal reflection funnel portion 58. Hence, West fails to disclose every feature of amended claim 1 for at least this reason.

Accordingly, Applicants respectfully request withdrawal of the 35 U.S.C. § 102(b) rejection of claim 1. Claims 2-7 depend from claim 1 and are allowable at least for this reason. Since none of the other prior art of record discloses or suggests all the features of the claimed invention, Applicants respectfully submit that independent claim 1, and all the claims that depend therefrom, are allowable.

Rejections Under 35 U.S.C. § 103

Claims 8-15 stand rejected under 35 U.S.C. § 103(a) as being allegedly unpatentable over U.S. Patent No. 6,274,924 issued to Carey, *et al.* ("Carey") in view of West.

Applicants respectfully submit that the rejection of claims 8 and 12 must be withdrawn because even if combined, Carey and West fail to disclose every claimed feature. Amended claims 8 and 12 both recite, *inter alia*:

> a lens including a total reflection surface encapsulating the package body and having a total reflection slope with respect to a central axis of a body of the lens, and a refractive surface formed to extend away from the central axis and beyond a periphery … of the total reflection surface

The Office Action relies on West to teach the lens of claims 8 and 12. But West's refractive portion 56 does not extend away from the central axis and beyond a periphery of the total internal reflection funnel portion 58. Cary fails to cure this deficiency of West. Hence, West and Carey fail to disclose every feature of amended claims 8 and 12 for at least this reason.

Accordingly, Applicants respectfully request withdrawal of the 35 U.S.C. § 103(a) rejection of claims 8 and 12. Claims 9-11 depend from claim 8 and are allowable at least for this reason. Claims 13-15 depend from claim 12 and are allowable at least for this reason. Since none of the other prior art of record, whether taken alone or in any combination, discloses or suggests all the features of the claimed invention, Applicants respectfully submit that independent claims 8 and 12, and all the claims that depend therefrom, are allowable.

Dependent Claims

Without disclaiming the independent patentability of any other dependent claims, Applicants respectfully submit that claims 2-4 are separately patentable over West.

Each of claims 2-4 recites "a curved refractive surface" (emphasis added). In rejecting these claims, however, the Office Action relies on West's total internal reflection (TIR) funnel portion 58 of Fig. 5D to teach the curved refractive surface (Office Action, page 3, paragraphs 6-8, in particular paragraph 8). Applicants disagree.

As West states, "[f]unnel portion 58 is designed as a TIR surface" (col. 4, line 12). Thus, West's total internal reflection funnel portion 58 can not possibly teach a refractive surface because it is a total reflective surface. The Office Action, therefore, fails to establish a *prima facie* case of anticipation of claims 2-4 for at least this reason.

CONCLUSION

Applicants believe that a full and complete response has been made to the pending Office Action and respectfully submit that all of the stated grounds for rejection have been overcome or rendered moot. Accordingly, Applicants respectfully submit that all pending claims are allowable and that the application is in condition for allowance.

Should the Examiner feel that there are any issues outstanding after consideration of this response, the Examiner is invited to contact Applicants' undersigned representative at the number below to expedite prosecution.

Prompt and favorable consideration of this Reply is respectfully requested.

Respectfully submitted,

/hae-chan park/

Hae-Chan Park
Reg. No. 50,114

Date: August 13, 2009

CUSTOMER NUMBER: 58027
H.C. Park & Associates, PLC
8500 Leesburg Pike
Suite 7500
Vienna, VA 22182
Tel: 703-288-5105
Fax: 703-288-5139
HCP/RTS/YDC

Electronic Acknowledgement Receipt

EFS ID:	5879560
Application Number:	11576882
International Application Number:	
Confirmation Number:	6820
Title of Invention:	Side Illumination Lens and Luminescent Device Using the Same
First Named Inventor/Applicant Name:	Do-Hyung Kim
Customer Number:	58027
Filer:	Hae-Chan Park/Richard Schachner
Filer Authorized By:	Hae-Chan Park
Attorney Docket Number:	P2745US00
Receipt Date:	13-AUG-2009
Filing Date:	06-APR-2007
Time Stamp:	14:52:51
Application Type:	U.S. National Stage under 35 USC 371

Payment information:

Submitted with Payment	no

File Listing:

Document Number	Document Description	File Name	File Size(Bytes)/ Message Digest	Multi Part /.zip	Pages (if appl.)
1		P2745US00_Reply.pdf	139009 4d6bd2ccc04766f1db9cbcf7939896b1572e8256	yes	13

	Multipart Description/PDF files in .zip description		
	Document Description	**Start**	**End**
	Amendment/Req. Reconsideration-After Non-Final Reject	1	1
	Specification	2	5
	Claims	6	9
	Applicant Arguments/Remarks Made in an Amendment	10	13
Warnings:			
Information:			
	Total Files Size (in bytes):	139009	

This Acknowledgement Receipt evidences receipt on the noted date by the USPTO of the indicated documents, characterized by the applicant, and including page counts, where applicable. It serves as evidence of receipt similar to a Post Card, as described in MPEP 503.

<u>New Applications Under 35 U.S.C. 111</u>
If a new application is being filed and the application includes the necessary components for a filing date (see 37 CFR 1.53(b)-(d) and MPEP 506), a Filing Receipt (37 CFR 1.54) will be issued in due course and the date shown on this Acknowledgement Receipt will establish the filing date of the application.

<u>National Stage of an International Application under 35 U.S.C. 371</u>
If a timely submission to enter the national stage of an international application is compliant with the conditions of 35 U.S.C. 371 and other applicable requirements a Form PCT/DO/EO/903 indicating acceptance of the application as a national stage submission under 35 U.S.C. 371 will be issued in addition to the Filing Receipt, in due course.

<u>New International Application Filed with the USPTO as a Receiving Office</u>
If a new international application is being filed and the international application includes the necessary components for an international filing date (see PCT Article 11 and MPEP 1810), a Notification of the International Application Number and of the International Filing Date (Form PCT/RO/105) will be issued in due course, subject to prescriptions concerning national security, and the date shown on this Acknowledgement Receipt will establish the international filing date of the application.

PTO/SB/06 (07-06)
Approved for use through 1/31/2007. OMB 0651-0032
U.S. Patent and Trademark Office; U.S. DEPARTMENT OF COMMERCE
Under the Paperwork Reduction Act of 1995, no persons are required to respond to a collection of information unless it displays a valid OMB control number.

PATENT APPLICATION FEE DETERMINATION RECORD

Substitute for Form PTO-875

Application or Docket Number	Filing Date	
11/576,882	04/06/2007	☐ To be Mailed

APPLICATION AS FILED – PART I

FOR	(Column 1) NUMBER FILED	(Column 2) NUMBER EXTRA	SMALL ENTITY ☐ RATE ($)	SMALL ENTITY FEE ($)	OR	OTHER THAN SMALL ENTITY RATE ($)	OTHER THAN SMALL ENTITY FEE ($)
☐ BASIC FEE (37 CFR 1.16(a), (b), or (c))	N/A	N/A	N/A			N/A	
☐ SEARCH FEE (37 CFR 1.16(k), (i), or (m))	N/A	N/A	N/A			N/A	
☐ EXAMINATION FEE (37 CFR 1.16(o), (p), or (q))	N/A	N/A	N/A			N/A	
TOTAL CLAIMS (37 CFR 1.16(i))	minus 20 =	*	X $ =		OR	X $ =	
INDEPENDENT CLAIMS (37 CFR 1.16(h))	minus 3 =	*	X $ =			X $ =	
☐ APPLICATION SIZE FEE (37 CFR 1.16(s))	If the specification and drawings exceed 100 sheets of paper, the application size fee due is $250 ($125 for small entity) for each additional 50 sheets or fraction thereof. See 35 U.S.C. 41(a)(1)(G) and 37 CFR 1.16(s).						
☐ MULTIPLE DEPENDENT CLAIM PRESENT (37 CFR 1.16(j))							
* If the difference in column 1 is less than zero, enter "0" in column 2.			TOTAL			TOTAL	

APPLICATION AS AMENDED – PART II

AMENDMENT 08/13/2009

	(Column 1) CLAIMS REMAINING AFTER AMENDMENT		(Column 2) HIGHEST NUMBER PREVIOUSLY PAID FOR	(Column 3) PRESENT EXTRA	SMALL ENTITY RATE ($)	SMALL ENTITY ADDITIONAL FEE ($)	OR	OTHER THAN SMALL ENTITY RATE ($)	OTHER THAN SMALL ENTITY ADDITIONAL FEE ($)
Total (37 CFR 1.16(i))	* 15	Minus	** 20	= 0	X $ =		OR	X $52=	0
Independent (37 CFR 1.16(h))	* 3	Minus	***3	= 0	X $ =		OR	X $220=	0
☐ Application Size Fee (37 CFR 1.16(s))									
☐ FIRST PRESENTATION OF MULTIPLE DEPENDENT CLAIM (37 CFR 1.16(j))							OR		
					TOTAL ADD'L FEE		OR	TOTAL ADD'L FEE	0

AMENDMENT

	(Column 1) CLAIMS REMAINING AFTER AMENDMENT		(Column 2) HIGHEST NUMBER PREVIOUSLY PAID FOR	(Column 3) PRESENT EXTRA	RATE ($)	ADDITIONAL FEE ($)		RATE ($)	ADDITIONAL FEE ($)
Total (37 CFR 1.16(i))	*	Minus	**	=	X $ =		OR	X $ =	
Independent (37 CFR 1.16(h))	*	Minus	***	=	X $ =		OR	X $ =	
☐ Application Size Fee (37 CFR 1.16(s))									
☐ FIRST PRESENTATION OF MULTIPLE DEPENDENT CLAIM (37 CFR 1.16(j))							OR		
					TOTAL ADD'L FEE		OR	TOTAL ADD'L FEE	

* If the entry in column 1 is less than the entry in column 2, write "0" in column 3.
** If the "Highest Number Previously Paid For" IN THIS SPACE is less than 20, enter "20".
*** If the "Highest Number Previously Paid For" IN THIS SPACE is less than 3, enter "3".
The "Highest Number Previously Paid For" (Total or Independent) is the highest number found in the appropriate box in column 1.

Legal Instrument Examiner:
/TIA A. BENTLEY/

This collection of information is required by 37 CFR 1.16. The information is required to obtain or retain a benefit by the public which is to file (and by the USPTO to process) an application. Confidentiality is governed by 35 U.S.C. 122 and 37 CFR 1.14. This collection is estimated to take 12 minutes to complete, including gathering, preparing, and submitting the completed application form to the USPTO. Time will vary depending upon the individual case. Any comments on the amount of time you require to complete this form and/or suggestions for reducing this burden, should be sent to the Chief Information Officer, U.S. Patent and Trademark Office, U.S. Department of Commerce, P.O. Box 1450, Alexandria, VA 22313-1450. DO NOT SEND FEES OR COMPLETED FORMS TO THIS ADDRESS. **SEND TO: Commissioner for Patents, P.O. Box 1450, Alexandria, VA 22313-1450.**

If you need assistance in completing the form, call 1-800-PTO-9199 and select option 2.

UNITED STATES PATENT AND TRADEMARK OFFICE

UNITED STATES DEPARTMENT OF COMMERCE
United States Patent and Trademark Office
Address: COMMISSIONER FOR PATENTS
P.O. Box 1450
Alexandria, Virginia 22313-1450
www.uspto.gov

APPLICATION NO.	FILING DATE	FIRST NAMED INVENTOR	ATTORNEY DOCKET NO.	CONFIRMATION NO.
11/576,882	04/06/2007	Do-Hyung Kim	P2745US00	6820

58027 7590 12/09/2009
H.C. PARK & ASSOCIATES, PLC
8500 LEESBURG PIKE
SUITE 7500
VIENNA, VA 22182

EXAMINER
DUNWIDDIE, MEGHAN K

ART UNIT	PAPER NUMBER
2875	

NOTIFICATION DATE	DELIVERY MODE
12/09/2009	ELECTRONIC

Please find below and/or attached an Office communication concerning this application or proceeding.

The time period for reply, if any, is set in the attached communication.

Notice of the Office communication was sent electronically on above-indicated "Notification Date" to the following e-mail address(es):

PATENT@PARK-LAW.COM

Office Action Summary	Application No.	Applicant(s)	
	11/576,882	KIM ET AL.	
	Examiner	Art Unit	
	MEGHAN K. DUNWIDDIE	2875	

-- The MAILING DATE of this communication appears on the cover sheet with the correspondence address --

Period for Reply

A SHORTENED STATUTORY PERIOD FOR REPLY IS SET TO EXPIRE 2 MONTH(S) OR THIRTY (30) DAYS, WHICHEVER IS LONGER, FROM THE MAILING DATE OF THIS COMMUNICATION.

- Extensions of time may be available under the provisions of 37 CFR 1.136(a). In no event, however, may a reply be timely filed after SIX (6) MONTHS from the mailing date of this communication.
- If NO period for reply is specified above, the maximum statutory period will apply and will expire SIX (6) MONTHS from the mailing date of this communication.
- Failure to reply within the set or extended period for reply will, by statute, cause the application to become ABANDONED (35 U.S.C. § 133). Any reply received by the Office later than three months after the mailing date of this communication, even if timely filed, may reduce any earned patent term adjustment. See 37 CFR 1.704(b).

Status

1)☐ Responsive to communication(s) filed on _____.

2a)☐ This action is **FINAL**. 2b)☐ This action is non-final.

3)☒ Since this application is in condition for allowance except for formal matters, prosecution as to the merits is closed in accordance with the practice under *Ex parte Quayle*, 1935 C.D. 11, 453 O.G. 213.

Disposition of Claims

4)☒ Claim(s) 1-15 is/are pending in the application.

4a) Of the above claim(s) _____ is/are withdrawn from consideration.

5)☒ Claim(s) 1-15 is/are allowed.

6)☐ Claim(s) _____ is/are rejected.

7)☐ Claim(s) _____ is/are objected to.

8)☐ Claim(s) _____ are subject to restriction and/or election requirement.

Application Papers

9)☐ The specification is objected to by the Examiner.

10)☐ The drawing(s) filed on _____ is/are: a)☐ accepted or b)☐ objected to by the Examiner.

Applicant may not request that any objection to the drawing(s) be held in abeyance. See 37 CFR 1.85(a).

Replacement drawing sheet(s) including the correction is required if the drawing(s) is objected to. See 37 CFR 1.121(d).

11)☐ The oath or declaration is objected to by the Examiner. Note the attached Office Action or form PTO-152.

Priority under 35 U.S.C. § 119

12)☐ Acknowledgment is made of a claim for foreign priority under 35 U.S.C. § 119(a)-(d) or (f).

a)☐ All b)☐ Some * c)☐ None of:

1.☐ Certified copies of the priority documents have been received.

2.☐ Certified copies of the priority documents have been received in Application No. _____.

3.☐ Copies of the certified copies of the priority documents have been received in this National Stage application from the International Bureau (PCT Rule 17.2(a)).

* See the attached detailed Office action for a list of the certified copies not received.

Attachment(s)

1) ☐ Notice of References Cited (PTO-892)

2) ☐ Notice of Draftsperson's Patent Drawing Review (PTO-948)

3) ☐ Information Disclosure Statement(s) (PTO/SB/08) Paper No(s)/Mail Date _____.

4) ☐ Interview Summary (PTO-413) Paper No(s)/Mail Date. _____ .

5) ☐ Notice of Informal Patent Application

6) ☐ Other: _____.

DETAILED ACTION

Claim Rejections - 35 USC § 112

1. The following is a quotation of the second paragraph of 35 U.S.C. 112:

> The specification shall conclude with one or more claims particularly pointing out and distinctly claiming the subject matter which the applicant regards as his invention.

2. Claim 1 is rejected under 35 U.S.C. 112, second paragraph, as being indefinite for failing to particularly point out and distinctly claim the subject matter which applicant regards as the invention. Claim 1 states "a linear and/or curved refractive surface(s)" and it is unclear as to whether the refractive surfaces are linear, curved, or linear and curved. Appropriate action is required.

Conclusion

3. This application is in condition for allowance except for the following formal matters:

Prosecution on the merits is closed in accordance with the practice under *Ex parte Quayle*, 25 USPQ 74, 453 O.G. 213, (Comm'r Pat. 1935).

A shortened statutory period for reply to this action is set to expire **TWO MONTHS** from the mailing date of this letter.

Any inquiry concerning this communication or earlier communications from the examiner should be directed to MEGHAN K. DUNWIDDIE whose telephone number is (571)272-8543. The examiner can normally be reached on Monday through Friday 8 am-4:30 pm.

If attempts to reach the examiner by telephone are unsuccessful, the examiner's supervisor, Sandra O'Shea can be reached on (571)272-2378. The fax phone number for the organization where this application or proceeding is assigned is 571-273-8300.

Information regarding the status of an application may be obtained from the Patent Application Information Retrieval (PAIR) system. Status information for published applications may be obtained from either Private PAIR or Public PAIR. Status information for unpublished applications is available through Private PAIR only. For more information about the PAIR system, see http://pair-direct.uspto.gov. Should you have questions on access to the Private PAIR system, contact the Electronic Business Center (EBC) at 866-217-9197 (toll-free). If you would like assistance from a USPTO Customer Service Representative or access to the automated information system, call 800-786-9199 (IN USA OR CANADA) or 571-272-1000.

MKD
/Sandra L. O'Shea/
Supervisory Patent Examiner, Art Unit 2875

RESPONSE UNDER 37 CFR 1.116
EXPEDITED PROCEDURE
GROUP ART UNIT 2875

IN THE UNITED STATES PATENT AND TRADEMARK OFFICE

In re Patent Application of:	Docket No.: P2745US00
Do Hyung KIM	
Serial No.: 11/576,882	Group Art Unit: 2875
Confirmation No.: 6820	
Filed: April 6, 2007	Examiner: DUNWIDDIE, Meghan K.

For: **SIDE ILLUMINATION LENS AND LUMINESCENT DEVICE USING THE SAME**

Mail Stop: AF
Commissioner for Patents
P.O. Box 1450
Alexandria, VA 22313-1450

RESPONSE TO EX PARTE QUAYLE ACTION

Madam:

In response to the Ex Parte Quayle Action of December 9, 2009 ("Office Action"), Applicant respectfully requests reconsideration of the application in view of the following Amendments and Remarks.

Amendments to the Claims begin on page 2.

Remarks begin on page 6.

Applicants believe that no extensions of time are required at this time. If extensions of time are necessary to prevent abandonment of this application, then such extensions of time are hereby petitioned for under 37 C.F.R. § 1.136(a). Applicants believe that no further fees for net addition of claims are required at this time. Any fees required for further extensions of time and any fees for the net addition of claims are hereby authorized to be charged to our Deposit Account No. 50-3698.

AMENDMENTS TO THE CLAIMS

Please **AMEND** claim 1 as shown below.

This listing of claims will replace all prior versions, and listings, of claims in the application.

1. (Currently amended) A lens, comprising:

a body;

a total reflection surface with a total reflection slope with respect to a central axis of the body; and

at least one of a linear refractive surface and[[/or]] a curved refractive surface[[(s)]] formed to extend away from the central axis and beyond a periphery of the total reflection surface.

2. (Original) The lens as claimed in claim 1, wherein the refractive surface comprises:

a linear refractive surface formed by being bent at the periphery of the total reflection surface; and

a curved refractive surface formed to extend from a periphery of the linear refractive surface.

3. (Original) The lens as claimed in claim 1, wherein the refractive surface comprises:

a curved refractive surface formed to extend from the periphery of the total reflection surface; and

a linear refractive surface formed by being bent at a periphery of the curved refractive surface.

4. (Original) The lens as claimed in any one of claims 1 to 3, wherein the curved refractive surface takes the shape of an ellipse, and a ratio of minor and major axes of the ellipse is 1:4 or less.

5. (Original) The lens as claimed in any one of claims 1 to 3, wherein the linear refractive surface is bent more than once.

6. (Original) The lens as claimed in claim 1, wherein the total reflection surface comprises:

a first total reflection surface having a section in the form of a V-shaped recess with a predetermined slope; and

a second total reflection surface extending upward from a periphery of the first total reflection surface and formed to be sloped with a gradient smaller than that of the first total reflection surface.

7. (Original) The lens as claimed in claim 1, wherein the refractive index of the body is 1.2 to 2.0.

8. (Previously presented) A luminescent device, comprising:

a package housing with an opening and a through-hole exposed by the opening;

a lead terminal having an inner portion exposed within the opening of the package housing and an outer portion extending from the inner portion and protruding to the outside of the package housing;

a heat sink coupled to a lower portion of the package housing and having a portion exposed through the opening; and

a lens including a total reflection surface encapsulating the package housing and having a total reflection slope with respect to a central axis of a body of the lens, and a refractive surface formed to extend away from the central axis and beyond a periphery of the total reflection surface.

9. (Original) The luminescent device as claimed in claim 8, wherein the package housing comprises first and second housings mutually coupled to each other with the lead terminal interposed therebetween, and the opening is formed in the first housing.

10. (Original) The luminescent device as claimed in claim 8, wherein the heat sink comprises:

a heat sink body corresponding to a bottom surface of the package housing; and

an insertion projection protruding upward from a central portion of the heat sink body and inserted into the through-hole of the package housing.

11. (Original) The luminescent device as claimed in claim 10, wherein the heat sink has a coupling projection on at least one of the heat sink body and the insertion projection.

12. (Previously presented) A luminescent device, comprising:

a heat sink support ring;

a heat sink inserted into the support ring;

at least two lead terminals arranged at both sides of the support ring while being spaced apart from the support ring and the heat sink;

a package body for molding the heat sink and the lead terminals to support them, the package body having an opening through which an upper portion of the heat sink and portions of the lead terminals are exposed; and

a lens including a total reflection surface encapsulating the package body and having a total reflection slope with respect to a central axis of a body of the lens, and a refractive surface formed to extend away from the central axis and beyond a periphery edge of the total reflection surface.

13. (Original) The luminescent device as claimed in claim 12, wherein the heat sink has a base and a projection protruding upward from the base at the center thereof, and the projection is inserted into the support ring.

14. (Original) The luminescent device as claimed in claim 13, wherein the heat sink further comprises a support ring-receiving groove in a side surface of the projection so that the support ring-receiving groove can be fastened to the support ring.

15. (Original) The luminescent device as claimed in claim 12, wherein the package body is a plastic resin body formed by insert-molding a thermosetting or thermoplastic resin after the heat sink is inserted into the support ring.

REMARKS

By this amendment, claim 1 has been amended solely to correct informalities. Accordingly, claims 1-15 are currently pending in the application, of which claims 1 and 12 are independent. Applicant appreciates the indication that claims 1-15 are allowed.

Applicants respectfully submit that the above amendments do not add new matter to the application and are fully supported by the specification. Support for the amendments may be found at least in Figures 1-6 of the specification.

Rejections Under 35 U.S.C. § 112, second paragraph

Claim 1 stands rejected under 35 U.S.C. § 112, second paragraph as being indefinite.

Claim 1 has been amended to clarify that a lens comprises at least one of a linear refractive surface and a curved refractive surface. This amendment is made for the sole purpose of clarifying claim 1. This amendment is not made for the purpose of avoiding prior art or narrowing the claimed invention, and no change in claim scope is intended. Therefore, Applicants do not intend to relinquish any subject matter by these amendments. Applicants respectfully submit that claim 1, as amended, fully complies with the requirements of 35 U.S.C. § 112, second paragraph.

Accordingly, Applicants respectfully request withdrawal of the 35 U.S.C. § 112, second paragraph rejection of claim 1.

CONCLUSION

Applicant believes that a full and complete response has been made to the pending Office Action and respectfully submits that all of the stated grounds for rejection have been

overcome or rendered moot. Accordingly, Applicant respectfully submits that the application is in condition for issuance.

Should the Examiner feel that there are any issues outstanding after consideration of this response, the Examiner is invited to contact Applicant's undersigned representative at the number below to expedite prosecution.

Prompt and favorable consideration of this Reply is respectfully requested.

Respectfully submitted,

/hae-chan park/

Hae-Chan Park
Reg. No. 50,114

Date: February 9, 2010

CUSTOMER NUMBER: 58027
H.C. Park & Associates, PLC
8500 Leesburg Pike
Suite 7500
Vienna, VA 22182
Tel: 703-288-5105
Fax: 703-288-5139
HCP/BCR

Electronic Acknowledgement Receipt

EFS ID:	6977570
Application Number:	11576882
International Application Number:	
Confirmation Number:	6820
Title of Invention:	Side Illumination Lens and Luminescent Device Using the Same
First Named Inventor/Applicant Name:	Do-Hyung Kim
Customer Number:	58027
Filer:	Hae-Chan Park/Richard Schachner
Filer Authorized By:	Hae-Chan Park
Attorney Docket Number:	P2745US00
Receipt Date:	09-FEB-2010
Filing Date:	06-APR-2007
Time Stamp:	15:39:29
Application Type:	U.S. National Stage under 35 USC 371

Payment information:

Submitted with Payment	no

File Listing:

Document Number	Document Description	File Name	File Size(Bytes)/ Message Digest	Multi Part /.zip	Pages (if appl.)
1		P2745US00-Reply.pdf	120555 6c42a250f13b0e78b726de180f7f5eb45e9ae435	yes	7

	Multipart Description/PDF files in .zip description		
	Document Description	**Start**	**End**
	Response after Ex Parte Quayle Action	1	1
	Claims	2	5
	Applicant Arguments/Remarks Made in an Amendment	6	7
Warnings:			
Information:			
	Total Files Size (in bytes):	120555	

This Acknowledgement Receipt evidences receipt on the noted date by the USPTO of the indicated documents, characterized by the applicant, and including page counts, where applicable. It serves as evidence of receipt similar to a Post Card, as described in MPEP 503.

New Applications Under 35 U.S.C. 111
If a new application is being filed and the application includes the necessary components for a filing date (see 37 CFR 1.53(b)-(d) and MPEP 506), a Filing Receipt (37 CFR 1.54) will be issued in due course and the date shown on this Acknowledgement Receipt will establish the filing date of the application.

National Stage of an International Application under 35 U.S.C. 371
If a timely submission to enter the national stage of an international application is compliant with the conditions of 35 U.S.C. 371 and other applicable requirements a Form PCT/DO/EO/903 indicating acceptance of the application as a national stage submission under 35 U.S.C. 371 will be issued in addition to the Filing Receipt, in due course.

New International Application Filed with the USPTO as a Receiving Office
If a new international application is being filed and the international application includes the necessary components for an international filing date (see PCT Article 11 and MPEP 1810), a Notification of the International Application Number and of the International Filing Date (Form PCT/RO/105) will be issued in due course, subject to prescriptions concerning national security, and the date shown on this Acknowledgement Receipt will establish the international filing date of the application.

PTO/SB/30EFS (07-09)
Approved for use through 07/31/2012. OMB 0651-0031
U.S. Patent and Trademark Office; U.S. DEPARTMENT OF COMMERCE

Under the Paperwork Reduction Act of 1995, no persons are required to respond to a collection of information unless it contains a valid OMB control number.

REQUEST FOR CONTINUED EXAMINATION(RCE)TRANSMITTAL
(Submitted Only via EFS-Web)

Application Number	11/576,882	Filing Date	2007-04-06	Docket Number (if applicable)	P2745US00	Art Unit	2875
First Named Inventor	Do-Hyung KIM			Examiner Name	DUNWIDDIE, Meghan K		

This is a Request for Continued Examination (RCE) under 37 CFR 1.114 of the above-identified application.
Request for Continued Examination (RCE) practice under 37 CFR 1.114 does not apply to any utility or plant application filed prior to June 8, 1995, or to any design application. The Instruction Sheet for this form is located at WWW.USPTO.GOV

SUBMISSION REQUIRED UNDER 37 CFR 1.114

Note: If the RCE is proper, any previously filed unentered amendments and amendments enclosed with the RCE will be entered in the order in which they were filed unless applicant instructs otherwise. If applicant does not wish to have any previously filed unentered amendment(s) entered, applicant must request non-entry of such amendment(s).

☐ Previously submitted. If a final Office action is outstanding, any amendments filed after the final Office action may be considered as a submission even if this box is not checked.

- ☐ Consider the arguments in the Appeal Brief or Reply Brief previously filed on _____
- ☐ Other _____

☒ Enclosed

- ☐ Amendment/Reply
- ☒ Information Disclosure Statement (IDS)
- ☐ Affidavit(s)/ Declaration(s)
- ☐ Other _____

MISCELLANEOUS

☐ Suspension of action on the above-identified application is requested under 37 CFR 1.103(c) for a period of months _____
(Period of suspension shall not exceed 3 months; Fee under 37 CFR 1.17(i) required)

☐ Other _____

FEES

☒ **The RCE fee under 37 CFR 1.17(e) is required by 37 CFR 1.114 when the RCE is filed.**
The Director is hereby authorized to charge any underpayment of fees, or credit any overpayments, to Deposit Account No 503698

SIGNATURE OF APPLICANT, ATTORNEY, OR AGENT REQUIRED

☒ Patent Practitioner Signature

☐ Applicant Signature

PTO/SB/30EFS (07-09)
Approved for use through 07/31/2012. OMB 0651-0031
U.S. Patent and Trademark Office; U.S. DEPARTMENT OF COMMERCE

Under the Paperwork Reduction Act of 1995, no persons are required to respond to a collection of information unless it contains a valid OMB control number.

Signature of Registered U.S. Patent Practitioner			
Signature	/hae-chan park/	Date (YYYY-MM-DD)	2010-02-19
Name	Hae-Chan Park	Registration Number	50114

This collection of information is required by 37 CFR 1.114. The information is required to obtain or retain a benefit by the public which is to file (and by the USPTO to process) an application. Confidentiality is governed by 35 U.S.C. 122 and 37 CFR 1.11 and 1.14. This collection is estimated to take 12 minutes to complete, including gathering, preparing, and submitting the completed application form to the USPTO. Time will vary depending upon the individual case. Any comments on the amount of time you require to complete this form and/or suggestions for reducing this burden, should be sent to the Chief Information Officer, U.S. Patent and Trademark Office, U.S. Department of Commerce, P.O. Box 1450, Alexandria, VA 22313-1450.

If you need assistance in completing the form, call 1-800-PTO-9199 and select option 2.

Privacy Act Statement

The Privacy Act of 1974 (P.L. 93-579) requires that you be given certain information in connection with your submission of the attached form related to a patent application or patent. Accordingly, pursuant to the requirements of the Act, please be advised that: (1) the general authority for the collection of this information is 35 U.S.C. 2(b)(2); (2) furnishing of the information solicited is voluntary; and (3) the principal purpose for which the information is used by the U.S. Patent and Trademark Office is to process and/or examine your submission related to a patent application or patent. If you do not furnish the requested information, the U.S. Patent and Trademark Office may not be able to process and/or examine your submission, which may result in termination of proceedings or abandonment of the application or expiration of the patent.

The information provided by you in this form will be subject to the following routine uses:

1. The information on this form will be treated confidentially to the extent allowed under the Freedom of Information Act (5 U.S.C. 552) and the Privacy Act (5 U.S.C. 552a). Records from this system of records may be disclosed to the Department of Justice to determine whether the Freedom of Information Act requires disclosure of these records.

2. A record from this system of records may be disclosed, as a routine use, in the course of presenting evidence to a court, magistrate, or administrative tribunal, including disclosures to opposing counsel in the course of settlement negotiations.

3. A record in this system of records may be disclosed, as a routine use, to a Member of Congress submitting a request involving an individual, to whom the record pertains, when the individual has requested assistance from the Member with respect to the subject matter of the record.

4. A record in this system of records may be disclosed, as a routine use, to a contractor of the Agency having need for the information in order to perform a contract. Recipients of information shall be required to comply with the requirements of the Privacy Act of 1974, as amended, pursuant to 5 U.S.C. 552a(m).

5. A record related to an International Application filed under the Patent Cooperation Treaty in this system of records may be disclosed, as a routine use, to the International Bureau of the World Intellectual Property Organization, pursuant to the Patent Cooperation Treaty.

6. A record in this system of records may be disclosed, as a routine use, to another federal agency for purposes of National Security review (35 U.S.C. 181) and for review pursuant to the Atomic Energy Act (42 U.S.C. 218(c)).

7. A record from this system of records may be disclosed, as a routine use, to the Administrator, General Services, or his/her designee, during an inspection of records conducted by GSA as part of that agency's responsibility to recommend improvements in records management practices and programs, under authority of 44 U.S.C. 2904 and 2906. Such disclosure shall be made in accordance with the GSA regulations governing inspection of records for this purpose, and any other relevant (i.e., GSA or Commerce) directive. Such disclosure shall not be used to make determinations about individuals.

8. A record from this system of records may be disclosed, as a routine use, to the public after either publication of the application pursuant to 35 U.S.C. 122(b) or issuance of a patent pursuant to 35 U.S.C. 151. Further, a record may be disclosed, subject to the limitations of 37 CFR 1.14, as a routine use, to the public if the record was filed in an application which became abandoned or in which the proceedings were terminated and which application is referenced by either a published application, an application open to public inspections or an issued patent.

9. A record from this system of records may be disclosed, as a routine use, to a Federal, State, or local law enforcement agency, if the USPTO becomes aware of a violation or potential violation of law or regulation.

PTO/SB/08a (07-09)
Approved for use through 07/31/2012. OMB 0651-0031
U.S. Patent and Trademark Office; U.S. DEPARTMENT OF COMMERCE
Under the Paperwork Reduction Act of 1995, no persons are required to respond to a collection of information unless it contains a valid OMB control number.

INFORMATION DISCLOSURE STATEMENT BY APPLICANT (**Not for submission under 37 CFR 1.99)**	Application Number	11576882
	Filing Date	2007-04-06
	First Named Inventor	Do-Hyung KIM
	Art Unit	2875
	Examiner Name	DUNWIDDIE, Meghan K
	Attorney Docket Number	P2745US00

U.S.PATENTS						
Examiner Initial*	Cite No	Patent Number	Kind Code[1]	Issue Date	Name of Patentee or Applicant of cited Document	Pages,Columns,Lines where Relevant Passages or Relevant Figures Appear
	1	1734834		1929-11-05	Steward et al.	
	2	2448244		1948-08-31	Arnold	
	3	2761056		1956-08-28	Lazo	
	4	2907869		1959-10-06	Vaccaro et al.	
	5	3223833		1965-12-14	Protzmann	
	6	3300646		1967-01-24	Casebeer	
	7	3349234		1967-10-24	Schwarz	
	8	3539796		1970-11-10	Zychal	

INFORMATION DISCLOSURE STATEMENT BY APPLICANT (Not for submission under 37 CFR 1.99)	Application Number	11576882
	Filing Date	2007-04-06
	First Named Inventor	Do-Hyung KIM
	Art Unit	2875
	Examiner Name	DUNWIDDIE, Meghan K
	Attorney Docket Number	P2745US00

	9	3586851		1971-06-22	Rudolph	
	10	3610941		1971-10-05	West	
	11	5177669		1993-01-05	Juskey et al.	
	12	5958100		1999-09-28	Farnworth et al.	
	13	6473554		2002-10-29	Pelka et al.	
	14	6582103		2003-06-24	Popovich et al.	
	15	6647199		2003-11-11	Pelka et al.	
	16	7075114		2006-07-11	Abe et al.	
	17	3821590		1974-06-28	Kosman et al.	
	18	4853593		1989-08-01	Stein	
	19	6924514		2005-08-02	Suenaga	

INFORMATION DISCLOSURE STATEMENT BY APPLICANT (Not for submission under 37 CFR 1.99)	Application Number	11576882
	Filing Date	2007-04-06
	First Named Inventor	Do-Hyung KIM
	Art Unit	2875
	Examiner Name	DUNWIDDIE, Meghan K
	Attorney Docket Number	P2745US00

	20	6747293		2004-06-08	Nitta, et al.	
	21	6517218		2003-02-11	Hochstein	
	22	7321161		2008-01-22	Teixeira, et al.	

If you wish to add additional U.S. Patent citation information please click the Add button.

U.S.PATENT APPLICATION PUBLICATIONS

Examiner Initial*	Cite No	Publication Number	Kind Code[1]	Publication Date	Name of Patentee or Applicant of cited Document	Pages,Columns,Lines where Relevant Passages or Relevant Figures Appear
	1	20010030866		2001-10-18	Hochstein	
	2	20040041222		2004-03-04	Loh	
	3	20040126913		2004-07-01	Loh	
	4	20040180459		2004-09-16	Hsu	
	5	20040227149		2004-11-18	Ibbetson et al.	
	6	20050045901		2005-03-03	Wall, Jr.	

INFORMATION DISCLOSURE STATEMENT BY APPLICANT (Not for submission under 37 CFR 1.99)	Application Number	11576882
	Filing Date	2007-04-06
	First Named Inventor	Do-Hyung KIM
	Art Unit	2875
	Examiner Name	DUNWIDDIE, Meghan K
	Attorney Docket Number	P2745US00

	7	20050269587		2005-12-08	Loh et al.	
	8	20060012299		2006-01-19	Suehiro et al.	
	9	20060103012		2006-05-18	Chin	

If you wish to add additional U.S. Published Application citation information please click the Add button.

FOREIGN PATENT DOCUMENTS

Examiner Initial*	Cite No	Foreign Document Number[3]	Country Code[2] ¡	Kind Code[4]	Publication Date	Name of Patentee or Applicant of cited Document	Pages,Columns,Lines where Relevant Passages or Relevant Figures Appear	T[5]
	1	243828	AT		2003-07-15	TELEDYNE LIGHTING & DISPLAY	Original Document unavailable; corresponds with WO98/026212	☐
	2	380971	AT		2007-12-15	TELEDYNE LIGHTING & DISPLAY	Original document unavailable; corresponds with WO01/007828	☐
	3	5379998	AU		1998-07-03	TELEDYNE LIGHTING & DISPLAY	Original Document unavailable; corresponds with WO98/026212	☐
	4	6202600	AU		2001-02-13	TELEDYNE LIGHTING & DISPLAY	Original document unavailable; corresponds with WO01/007828	☐
	5	2274828	CA		1998-06-18	TELEDYNE LIGHTING & DISPLAY		☐
	6	2402037	CA		2001-02-01	TELEDYNE LIGHTING & DISPLAY		☐

INFORMATION DISCLOSURE STATEMENT BY APPLICANT (Not for submission under 37 CFR 1.99)	Application Number	11576882
	Filing Date	2007-04-06
	First Named Inventor	Do-Hyung KIM
	Art Unit	2875
	Examiner Name	DUNWIDDIE, Meghan K
	Attorney Docket Number	P2745US00

	7	1380704	CN		2002-11-20	TOSHIBA KK		☐
	8	2309586	DE		1973-08-30	NORTHERN ELECTRIC CO	Corresponds to US3821590	☐
	9	3633203	DE		1988-03-31	SIEMENS AG	Corresponds to US4853593	☐
	10	3825436	DE		1989-03-23	INOTEC GMBH GES FUER INNOVATIV		☐
	11	4237107	DE		1994-05-05	WUSTLICH HOLDING GMBH		☐
	12	60037427	DE		2009-02-05	CHI MEI OPTOELECTRONICS CORP.		☐
	13	69723101	DE		2003-12-18	TELEDYNE LIGHTING & DISPLAY		☐
	14	0403764	EP		1990-12-27	INOTEC GMBH GES FUER INNOVATIV		☐
	15	0442529	EP		1991-08-21	TOSOH CORP		☐
	16	0531939	EP		1993-03-17	ENPLAS CORP		☐
	17	0732679	EP		1996-09-18	HAYASHI TELEMPU KK		☐

INFORMATION DISCLOSURE STATEMENT BY APPLICANT (Not for submission under 37 CFR 1.99)		
	Application Number	11576882
	Filing Date	2007-04-06
	First Named Inventor	Do-Hyung KIM
	Art Unit	2875
	Examiner Name	DUNWIDDIE, Meghan K
	Attorney Docket Number	P2745US00

	18	0733850	EP		1996-09-25	BARTENBACH CHRISTIAN		☐
	19	0733928	EP		1996-09-25	HUGHES AIRCRAFT CO		☐
	20	0944800	EP		2003-06-25	TELEDYNE LIGHTING & DISPLAY		☐
	21	1200772	EP		2007-12-12	TELEDYNE LIGHTING & DISPLAY	Corresponds to WO0107828	☐
	22	2283849	GB		1995-05-17	PROTEC FIRE DETECTION PLC		☐
	23	07-111343	JP		1995-04-25	MATSUSHITA ELECTRONICS CORP		☐
	24	11-110790	JP		1999-04-23	TOSHIBA CORP		☐
	25	11-121809	JP		1999-04-30	MATSUSHITA ELECTRONICS CORP		☐
	26	2000-174347	JP		2000-06-23	NICHIA KAGAKU KOGYO KK		☐
	27	2002-176203	JP		2002-06-21	OMRON CORP		☐
	28	2002-512727	JP		2002-04-23	TELEDYNE LIGHTING & DISPLAY		☐

INFORMATION DISCLOSURE STATEMENT BY APPLICANT (Not for submission under 37 CFR 1.99)	Application Number	11576882
	Filing Date	2007-04-06
	First Named Inventor	Do-Hyung KIM
	Art Unit	2875
	Examiner Name	DUNWIDDIE, Meghan K
	Attorney Docket Number	P2745US00

	29	2003-110146	JP		2003-04-11	MATSUSHITA ELECTRIC WORKS LTD		☐
	30	2003-303936	JP		2003-10-24	MATSUSHITA ELECTRIC IND CO LTD		☐
	31	2004-221598	JP		2004-08-05	LUMILEDS LIGHTING US LLC		☐
	32	2-143202	JP		1990-06-01	MORI TAKASHI		☐
	33	4015421	JP		2007-09-21	TELEDYNE LIGHTING & DISPLAY		☐
	34	5-46062	JP		1993-06-18	FURUKAWA ELECTRIC CO LTD		☐
	35	5-53252	JP		1993-07-13	FUJI PHOTO FILM CO LTD		☐
	36	63-206713	JP		1988-08-26	KYOEI PLASTICS KOGEISHA		☐
	37	63-55503	JP		1988-03-10	SHARP CORP		☐
	38	H03-11771	JP		1991-01-21	SIEMENS AG		☐
	39	H11-40724	JP		1999-02-12	MATSUSHITA ELECTRONICS CORP		☐

INFORMATION DISCLOSURE STATEMENT BY APPLICANT (Not for submission under 37 CFR 1.99)	Application Number	11576882
	Filing Date	2007-04-06
	First Named Inventor	Do-Hyung KIM
	Art Unit	2875
	Examiner Name	DUNWIDDIE, Meghan K
	Attorney Docket Number	P2745US00

	40	S58-173248	JP		1983-11-19			☐
	41	S61-42158	JP		1986-02-28	FUJITSU LTD		☐
	42	2004-342791	JP		2004-12-02	HATTORI KUNIHIRO		☐
	43	1020030024283	KR		2003-03-26	AUK CORP		☐
	44	1020050111298	KR		2005-11-21	SEOUL SEMICONDUCTOR CO LTD		☐
	45	1020060002326	KR		2006-01-09	SEOUL SEMICONDUCTOR CO LTD		☐
	46	2134000	RU		1999-07-27	ABRAMOV VLADIMIR SEMENOVICH		☐
	47	00/55914	WO		2000-09-21	GENTEX CORP		☐
	48	01/007828	WO		2001-02-01	TELEDYNE LIGHTING & DISPLAY	Corresponds to AT380971, AU6202600, EP1200772	☐
	49	92/13232	WO		1992-08-06	HOLOPHANE CO INC		☐
	50	98/026212	WO		1998-06-18	TELEDYNE LIGHTING & DISPLAY	Corresponds with AT243828, AU5379998	☐

INFORMATION DISCLOSURE STATEMENT BY APPLICANT (Not for submission under 37 CFR 1.99)	Application Number	11576882
	Filing Date	2007-04-06
	First Named Inventor	Do-Hyung KIM
	Art Unit	2875
	Examiner Name	DUNWIDDIE, Meghan K
	Attorney Docket Number	P2745US00

If you wish to add additional Foreign Patent Document citation information please click the Add button

NON-PATENT LITERATURE DOCUMENTS

Examiner Initials*	Cite No	Include name of the author (in CAPITAL LETTERS), title of the article (when appropriate), title of the item (book, magazine, journal, serial, symposium, catalog, etc), date, pages(s), volume-issue number(s), publisher, city and/or country where published.	T[5]
	1	Non-Final Office Action dated Aug. 1, 2006 issued in co-pending U.S. App. Ser. No. 11/178,144	☐
	2	Final Office Action dated Mar. 12, 2007 issued in co-pending U.S. App. Ser. No. 11/178,144	☐
	3	Notice of Allowance dated Nov. 29, 2007 issued in co-pending U.S. App. Ser. No. 11/178,144	☐
	4	Non-Final Office Action dated Oct. 16, 2008 issued in co-pending U.S. App. Ser. No. 11/575,128	☐
	5	Non-Final Office Action dated July 24, 2009 issued in co-pending U.S. App. Ser. No. 11/575,128	☐
	6	Final Office Action dated Dec. 29, 2009 issued in co-pending U.S. App. Ser. No. 11/575,128	☐
	7	Non-Final Office Action dated June 2, 2009 issued in co-pending U.S. App. Ser. No. 12/196,028	☐

If you wish to add additional non-patent literature document citation information please click the Add button

EXAMINER SIGNATURE

Examiner Signature		Date Considered	

*EXAMINER: Initial if reference considered, whether or not citation is in conformance with MPEP 609. Draw line through a citation if not in conformance and not considered. Include copy of this form with next communication to applicant.

EFS Web 2.1.16

INFORMATION DISCLOSURE STATEMENT BY APPLICANT (Not for submission under 37 CFR 1.99)	Application Number	11576882
	Filing Date	2007-04-06
	First Named Inventor	Do-Hyung KIM
	Art Unit	2875
	Examiner Name	DUNWIDDIE, Meghan K
	Attorney Docket Number	P2745US00

[1] See Kind Codes of USPTO Patent Documents at www.USPTO.GOV or MPEP 901.04. [2] Enter office that issued the document, by the two-letter code (WIPO Standard ST.3). [3] For Japanese patent documents, the indication of the year of the reign of the Emperor must precede the serial number of the patent document. [4] Kind of document by the appropriate symbols as indicated on the document under WIPO Standard ST.16 if possible. [5] Applicant is to place a check mark here if English language translation is attached.

INFORMATION DISCLOSURE STATEMENT BY APPLICANT (Not for submission under 37 CFR 1.99)	Application Number	11576882
	Filing Date	2007-04-06
	First Named Inventor	Do-Hyung KIM
	Art Unit	2875
	Examiner Name	DUNWIDDIE, Meghan K
	Attorney Docket Number	P2745US00

CERTIFICATION STATEMENT

Please see 37 CFR 1.97 and 1.98 to make the appropriate selection(s):

☐ That each item of information contained in the information disclosure statement was first cited in any communication from a foreign patent office in a counterpart foreign application not more than three months prior to the filing of the information disclosure statement. See 37 CFR 1.97(e)(1).

OR

☐ That no item of information contained in the information disclosure statement was cited in a communication from a foreign patent office in a counterpart foreign application, and, to the knowledge of the person signing the certification after making reasonable inquiry, no item of information contained in the information disclosure statement was known to any individual designated in 37 CFR 1.56(c) more than three months prior to the filing of the information disclosure statement. See 37 CFR 1.97(e)(2).

☐ See attached certification statement.

☐ Fee set forth in 37 CFR 1.17 (p) has been submitted herewith.

☒ None

SIGNATURE

A signature of the applicant or representative is required in accordance with CFR 1.33, 10.18. Please see CFR 1.4(d) for the form of the signature.

Signature	/hae-chan park/	Date (YYYY-MM-DD)	2010-02-19
Name/Print	Hae-Chan Park	Registration Number	50114

This collection of information is required by 37 CFR 1.97 and 1.98. The information is required to obtain or retain a benefit by the public which is to file (and by the USPTO to process) an application. Confidentiality is governed by 35 U.S.C. 122 and 37 CFR 1.14. This collection is estimated to take 1 hour to complete, including gathering, preparing and submitting the completed application form to the USPTO. Time will vary depending upon the individual case. Any comments on the amount of time you require to complete this form and/or suggestions for reducing this burden, should be sent to the Chief Information Officer, U.S. Patent and Trademark Office, U.S. Department of Commerce, P.O. Box 1450, Alexandria, VA 22313-1450. DO NOT SEND FEES OR COMPLETED FORMS TO THIS ADDRESS. **SEND TO: Commissioner for Patents, P.O. Box 1450, Alexandria, VA 22313-1450.**

Privacy Act Statement

The Privacy Act of 1974 (P.L. 93-579) requires that you be given certain information in connection with your submission of the attached form related to a patent application or patent. Accordingly, pursuant to the requirements of the Act, please be advised that: (1) the general authority for the collection of this information is 35 U.S.C. 2(b)(2); (2) furnishing of the information solicited is voluntary; and (3) the principal purpose for which the information is used by the U.S. Patent and Trademark Office is to process and/or examine your submission related to a patent application or patent. If you do not furnish the requested information, the U.S. Patent and Trademark Office may not be able to process and/or examine your submission, which may result in termination of proceedings or abandonment of the application or expiration of the patent.

The information provided by you in this form will be subject to the following routine uses:

1. The information on this form will be treated confidentially to the extent allowed under the Freedom of Information Act (5 U.S.C. 552) and the Privacy Act (5 U.S.C. 552a). Records from this system of records may be disclosed to the Department of Justice to determine whether the Freedom of Information Act requires disclosure of these record s.

2. A record from this system of records may be disclosed, as a routine use, in the course of presenting evidence to a court, magistrate, or administrative tribunal, including disclosures to opposing counsel in the course of settlement negotiations.

3. A record in this system of records may be disclosed, as a routine use, to a Member of Congress submitting a request involving an individual, to whom the record pertains, when the individual has requested assistance from the Member with respect to the subject matter of the record.

4. A record in this system of records may be disclosed, as a routine use, to a contractor of the Agency having need for the information in order to perform a contract. Recipients of information shall be required to comply with the requirements of the Privacy Act of 1974, as amended, pursuant to 5 U.S.C. 552a(m).

5. A record related to an International Application filed under the Patent Cooperation Treaty in this system of records may be disclosed, as a routine use, to the International Bureau of the World Intellectual Property Organization, pursuant to the Patent Cooperation Treaty.

6. A record in this system of records may be disclosed, as a routine use, to another federal agency for purposes of National Security review (35 U.S.C. 181) and for review pursuant to the Atomic Energy Act (42 U.S.C. 218(c)).

7. A record from this system of records may be disclosed, as a routine use, to the Administrator, General Services, or his/her designee, during an inspection of records conducted by GSA as part of that agency's responsibility to recommend improvements in records management practices and programs, under authority of 44 U.S.C. 2904 and 2906. Such disclosure shall be made in accordance with the GSA regulations governing inspection of records for this purpose, and any other relevant (i.e., GSA or Commerce) directive. Such disclosure shall not be used to make determinations about individuals.

8. A record from this system of records may be disclosed, as a routine use, to the public after either publication of the application pursuant to 35 U.S.C. 122(b) or issuance of a patent pursuant to 35 U.S.C. 151. Further, a record may be disclosed, subject to the limitations of 37 CFR 1.14, as a routine use, to the public if the record was filed in an application which became abandoned or in which the proceedings were terminated and which application is referenced by either a published application, an application open to public inspections or an issued patent.

9. A record from this system of records may be disclosed, as a routine use, to a Federal, State, or local law enforcement agency, if the USPTO becomes aware of a violation or potential violation of law or regulation.

PTO/SB/08a (07-09)
Approved for use through 07/31/2012. OMB 0651-0031
U.S. Patent and Trademark Office; U.S. DEPARTMENT OF COMMERCE
Under the Paperwork Reduction Act of 1995, no persons are required to respond to a collection of information unless it contains a valid OMB control number.

INFORMATION DISCLOSURE STATEMENT BY APPLICANT

(**Not for submission under 37 CFR 1.99)**

Application Number	11576882
Filing Date	2007-04-06
First Named Inventor	Do-Hyung KIM
Art Unit	2875
Examiner Name	DUNWIDDIE, Meghan K
Attorney Docket Number	P2745US00

U.S.PATENTS

Examiner Initial*	Cite No	Patent Number	Kind Code[1]	Issue Date	Name of Patentee or Applicant of cited Document	Pages,Columns,Lines where Relevant Passages or Relevant Figures Appear
	1					

If you wish to add additional U.S. Patent citation information please click the Add button.

U.S.PATENT APPLICATION PUBLICATIONS

Examiner Initial*	Cite No	Publication Number	Kind Code[1]	Publication Date	Name of Patentee or Applicant of cited Document	Pages,Columns,Lines where Relevant Passages or Relevant Figures Appear
	1					

If you wish to add additional U.S. Published Application citation information please click the Add button.

FOREIGN PATENT DOCUMENTS

Examiner Initial*	Cite No	Foreign Document Number[3]	Country Code[2] ¡	Kind Code[4]	Publication Date	Name of Patentee or Applicant of cited Document	Pages,Columns,Lines where Relevant Passages or Relevant Figures Appear	T[5]
	1	99/06759	WO		1999-02-11	Showers International Pty Ltd		☐
	2	97/30431	WO		1997-08-21	Leibe Thomas		☐
	3	2004102685	WO		2004-11-25	Park, Byoung Jae		☐

INFORMATION DISCLOSURE STATEMENT BY APPLICANT (Not for submission under 37 CFR 1.99)	Application Number	11576882
	Filing Date	2007-04-06
	First Named Inventor	Do-Hyung KIM
	Art Unit	2875
	Examiner Name	DUNWIDDIE, Meghan K
	Attorney Docket Number	P2745US00

If you wish to add additional Foreign Patent Document citation information please click the Add button

NON-PATENT LITERATURE DOCUMENTS

Examiner Initials*	Cite No	Include name of the author (in CAPITAL LETTERS), title of the article (when appropriate), title of the item (book, magazine, journal, serial, symposium, catalog, etc), date, pages(s), volume-issue number(s), publisher, city and/or country where published.	T[5]
	1		☐

If you wish to add additional non-patent literature document citation information please click the Add button

EXAMINER SIGNATURE

Examiner Signature		Date Considered	

*EXAMINER: Initial if reference considered, whether or not citation is in conformance with MPEP 609. Draw line through a citation if not in conformance and not considered. Include copy of this form with next communication to applicant.

[1] See Kind Codes of USPTO Patent Documents at www.USPTO.GOV or MPEP 901.04. [2] Enter office that issued the document, by the two-letter code (WIPO Standard ST.3). [3] For Japanese patent documents, the indication of the year of the reign of the Emperor must precede the serial number of the patent document. [4] Kind of document by the appropriate symbols as indicated on the document under WIPO Standard ST.16 if possible. [5] Applicant is to place a check mark here if English language translation is attached.

INFORMATION DISCLOSURE STATEMENT BY APPLICANT (Not for submission under 37 CFR 1.99)	Application Number	11576882
	Filing Date	2007-04-06
	First Named Inventor	Do-Hyung KIM
	Art Unit	2875
	Examiner Name	DUNWIDDIE, Meghan K
	Attorney Docket Number	P2745US00

CERTIFICATION STATEMENT

Please see 37 CFR 1.97 and 1.98 to make the appropriate selection(s):

☐ That each item of information contained in the information disclosure statement was first cited in any communication from a foreign patent office in a counterpart foreign application not more than three months prior to the filing of the information disclosure statement. See 37 CFR 1.97(e)(1).

OR

☐ That no item of information contained in the information disclosure statement was cited in a communication from a foreign patent office in a counterpart foreign application, and, to the knowledge of the person signing the certification after making reasonable inquiry, no item of information contained in the information disclosure statement was known to any individual designated in 37 CFR 1.56(c) more than three months prior to the filing of the information disclosure statement. See 37 CFR 1.97(e)(2).

☐ See attached certification statement.

☐ Fee set forth in 37 CFR 1.17 (p) has been submitted herewith.

☒ None

SIGNATURE

A signature of the applicant or representative is required in accordance with CFR 1.33, 10.18. Please see CFR 1.4(d) for the form of the signature.

Signature	/hae-chan park/	Date (YYYY-MM-DD)	2010-02-19
Name/Print	Hae-Chan Park	Registration Number	50114

This collection of information is required by 37 CFR 1.97 and 1.98. The information is required to obtain or retain a benefit by the public which is to file (and by the USPTO to process) an application. Confidentiality is governed by 35 U.S.C. 122 and 37 CFR 1.14. This collection is estimated to take 1 hour to complete, including gathering, preparing and submitting the completed application form to the USPTO. Time will vary depending upon the individual case. Any comments on the amount of time you require to complete this form and/or suggestions for reducing this burden, should be sent to the Chief Information Officer, U.S. Patent and Trademark Office, U.S. Department of Commerce, P.O. Box 1450, Alexandria, VA 22313-1450. DO NOT SEND FEES OR COMPLETED FORMS TO THIS ADDRESS. **SEND TO: Commissioner for Patents, P.O. Box 1450, Alexandria, VA 22313-1450.**

Privacy Act Statement

The Privacy Act of 1974 (P.L. 93-579) requires that you be given certain information in connection with your submission of the attached form related to a patent application or patent. Accordingly, pursuant to the requirements of the Act, please be advised that: (1) the general authority for the collection of this information is 35 U.S.C. 2(b)(2); (2) furnishing of the information solicited is voluntary; and (3) the principal purpose for which the information is used by the U.S. Patent and Trademark Office is to process and/or examine your submission related to a patent application or patent. If you do not furnish the requested information, the U.S. Patent and Trademark Office may not be able to process and/or examine your submission, which may result in termination of proceedings or abandonment of the application or expiration of the patent.

The information provided by you in this form will be subject to the following routine uses:

1. The information on this form will be treated confidentially to the extent allowed under the Freedom of Information Act (5 U.S.C. 552) and the Privacy Act (5 U.S.C. 552a). Records from this system of records may be disclosed to the Department of Justice to determine whether the Freedom of Information Act requires disclosure of these record s.

2. A record from this system of records may be disclosed, as a routine use, in the course of presenting evidence to a court, magistrate, or administrative tribunal, including disclosures to opposing counsel in the course of settlement negotiations.

3. A record in this system of records may be disclosed, as a routine use, to a Member of Congress submitting a request involving an individual, to whom the record pertains, when the individual has requested assistance from the Member with respect to the subject matter of the record.

4. A record in this system of records may be disclosed, as a routine use, to a contractor of the Agency having need for the information in order to perform a contract. Recipients of information shall be required to comply with the requirements of the Privacy Act of 1974, as amended, pursuant to 5 U.S.C. 552a(m).

5. A record related to an International Application filed under the Patent Cooperation Treaty in this system of records may be disclosed, as a routine use, to the International Bureau of the World Intellectual Property Organization, pursuant to the Patent Cooperation Treaty.

6. A record in this system of records may be disclosed, as a routine use, to another federal agency for purposes of National Security review (35 U.S.C. 181) and for review pursuant to the Atomic Energy Act (42 U.S.C. 218(c)).

7. A record from this system of records may be disclosed, as a routine use, to the Administrator, General Services, or his/her designee, during an inspection of records conducted by GSA as part of that agency's responsibility to recommend improvements in records management practices and programs, under authority of 44 U.S.C. 2904 and 2906. Such disclosure shall be made in accordance with the GSA regulations governing inspection of records for this purpose, and any other relevant (i.e., GSA or Commerce) directive. Such disclosure shall not be used to make determinations about individuals.

8. A record from this system of records may be disclosed, as a routine use, to the public after either publication of the application pursuant to 35 U.S.C. 122(b) or issuance of a patent pursuant to 35 U.S.C. 151. Further, a record may be disclosed, subject to the limitations of 37 CFR 1.14, as a routine use, to the public if the record was filed in an application which became abandoned or in which the proceedings were terminated and which application is referenced by either a published application, an application open to public inspections or an issued patent.

9. A record from this system of records may be disclosed, as a routine use, to a Federal, State, or local law enforcement agency, if the USPTO becomes aware of a violation or potential violation of law or regulation.

(19) Canadian Intellectual Property Office

An Agency of Industry Canada

Office de la Propriété Intellectuelle du Canada

Un organisme d'Industrie Canada

(11) CA 2 274 828 (13) A1

(43) 18.06.1998

(12)

(21) 2 274 828

(22) 09.12.1997

(51) Int. Cl.[6]: F21V 008/00

(85) 11.06.1999

(86) PCT/US97/22742

(87) WO98/26212

(30) 08/764,298 US 12.12.1996
08/936,717 US 24.09.1997

(71)
TELEDYNE LIGHTING AND DISPLAY PRODUCTS, INC.,
2nd Floor
12525 Daphne Avenue, HAWTHORNE, XX (US).

(72)
PELKA, David G. (US).
POPOVICH, John (US).
QIAO, Yong (US).

(74)
Smart & Biggar

(54) APPAREIL D'ECLAIRAGE EXTRA-PLAT

(54) LIGHTING APPARATUS HAVING LOW PROFILE

(57)

Disclosed is a low profile lighting apparatus (170) that is particularly advantageous for use as a backlight for illuminating a display. The lighting apparatus (170) includes a waveguide (172) coupled to a light source (180) for injecting light into the waveguide (170). The waveguide (170) includes a plurality of elongate structures for ejecting light propagating within the waveguide (170) through a predetermined surface of the waveguide. Another embodiment of the waveguide (426) includes a central region (74) of reduced thickness that redirects light propagating within the waveguide (426). The lighting apparatus (170) has a low profile so it is particularly useful in areas of limited space.

OPIC
OFFICE DE LA PROPRIÉTÉ INTELLECTUELLE DU CANADA

CIPO
CANADIAN INTELLECTUAL PROPERTY OFFICE

(12) (19) (CA) **Demande-Application**

(21) (A1) **2,274,828**
(86) 1997/12/09
(87) 1998/06/18

(72) PELKA, David G., US
(72) POPOVICH, John, US
(72) QIAO, Yong, US
(71) TELEDYNE LIGHTING AND DISPLAY PRODUCTS, INC., US

(51) Int.Cl.[6] F21V 8/00
(30) 1996/12/12 (08/764,298) US
(30) 1997/09/24 (08/936,717) US

(54) **APPAREIL D'ECLAIRAGE EXTRA-PLAT**
(54) **LIGHTING APPARATUS HAVING LOW PROFILE**

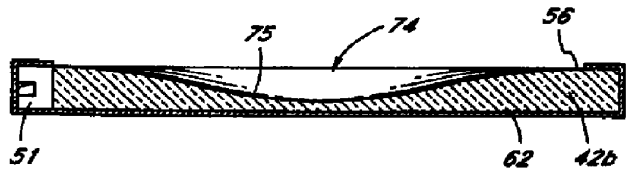

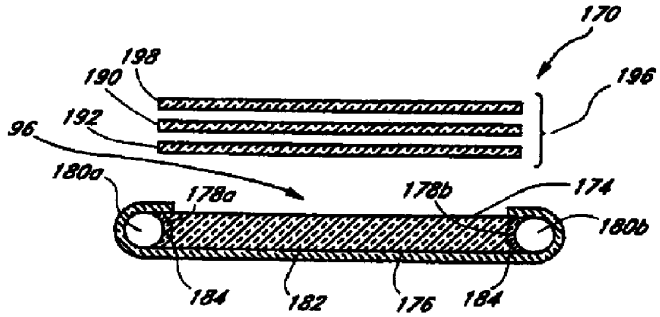

(57) L'invention porte sur un appareil d'éclairage (170) extra-plat spécialement utilisé comme éclairage de fond d'un panneau. Ledit appareil (170) comporte un guide d'ondes (172) relié à une source lumineuse (180) dont la lumière est injectée dans le guide d'ondes (172). Le guide d'ondes (172) comporte une série de structures allongées éjectant la lumière se propageant dans le guide d'ondes (172) à travers une surface prédéterminée du guide d'ondes. Dans une variante, le guide d'ondes (426) comporte une zone centrale (74) d'épaisseur réduite qui redirige la lumière se propageant dans le guide d'ondes (426). L'appareil d'éclairage (170), qui est extra-plat, est particulièrement utile dans les zones où l'espace est limité.

(57) Disclosed is a low profile lighting apparatus (170) that is particularly advantageous for use as a backlight for illuminating a display. The lighting apparatus (170) includes a waveguide (172) coupled to a light source (180) for injecting light into the waveguide (170). The waveguide (170) includes a plurality of elongate structures for ejecting light propagating within the waveguide (170) through a predetermined surface of the waveguide. Another embodiment of the waveguide (426) includes a central region (74) of reduced thickness that redirects light propagating within the waveguide (426). The lighting apparatus (170) has a low profile so it is particularly useful in areas of limited space.

PCT WORLD INTELLECTUAL PROPERTY ORGANIZATION
International Bureau

INTERNATIONAL APPLICATION PUBLISHED UNDER THE PATENT COOPERATION TREATY (PCT)

(51) International Patent Classification 6 : F21V 8/00 — A1

(11) International Publication Number: WO 98/26212

(43) International Publication Date: 18 June 1998 (18.06.98)

(21) International Application Number: PCT/US97/22742

(22) International Filing Date: 9 December 1997 (09.12.97)

(30) Priority Data:
08/764,298 12 December 1996 (12.12.96) US
08/936,717 24 September 1997 (24.09.97) US

(71) Applicant: TELEDYNE LIGHTING AND DISPLAY PRODUCTS, INC. [US/US]; 2nd floor, 12525 Daphne Avenue, Hawthorne, CA 90250 (US).

(72) Inventors: PELKA, David, G.; 8315 Kenyon Avenue, Los Angeles, CA 90045 (US). POPOVICH, John; 1237 Cuchara Drive, Del Mar, CA 92014 (US). QIAO, Yong; 808 Wigwam Avenue, Arcadia, CA 91006 (US).

(74) Agent: SIMPSON, Andrew, H.; Knobbe, Martens, Olson & Bear, 16th floor, 620 Newport Center Drive, Newport Beach, CA 92660-8016 (US).

(81) Designated States: AL, AM, AT, AU, AZ, BA, BB, BG, BR, BY, CA, CH, CN, CU, CZ, DE, DK, EE, ES, FI, GB, GE, GH, HU, IL, IS, JP, KE, KG, KP, KR, KZ, LC, LK, LR, LS, LT, LU, LV, MD, MG, MK, MN, MW, MX, NO, NZ, PL, PT, RO, RU, SD, SE, SG, SI, SK, SL, TJ, TM, TR, TT, UA, UG, UZ, VN, YU, ZW, ARIPO patent (GH, GM, KE, LS, MW, SD, SZ, UG, ZW), Eurasian patent (AM, AZ, BY, KG, KZ, MD, RU, TJ, TM), European patent (AT, BE, CH, DE, DK, ES, FI, FR, GB, GR, IE, IT, LU, MC, NL, PT, SE), OAPI patent (BF, BJ, CF, CG, CI, CM, GA, GN, ML, MR, NE, SN, TD, TG).

Published
With international search report.

(54) Title: LIGHTING APPARATUS HAVING LOW PROFILE

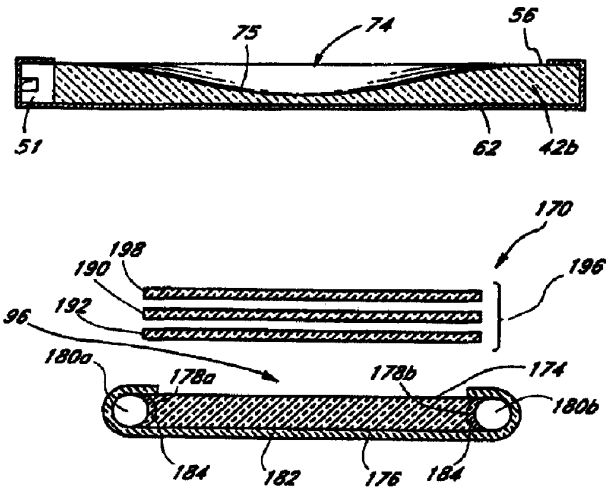

(57) Abstract

Disclosed is a low profile lighting apparatus (170) that is particularly advantageous for use as a backlight for illuminating a display. The lighting apparatus (170) includes a waveguide (172) coupled to a light source (180) for injecting light into the waveguide (170). The waveguide (170) includes a plurality of elongate structures for ejecting light propagating within the waveguide (170) through a predetermined surface of the waveguide. Another embodiment of the waveguide (426) includes a central region (74) of reduced thickness that redirects light propagating within the waveguide (426). The lighting apparatus (170) has a low profile so it is particularly useful in areas of limited space.

LIGHTING APPARATUS HAVING LOW PROFILE

Background of the Invention

This application is a continuation in part of U.S. Patent Application Serial No. 08/764,298, filed December 12, 1996, entitled "Waveguide with Light Emitting Diodes for Illumination and Display." The present invention relates to a lighting apparatus. More particularly, the present invention relates to a low profile lighting apparatus utilizing a waveguide for illumination. The invention is particularly advantageous for use as a backlight for illuminating a display.

Backlights may be used to illuminate both mechanical displays, such as on analog watches or automobile gauges, as well as electronic displays, such as liquid crystal displays used with cellular phones, and pagers, and personal digital assistants. Because many backlight applications involve smaller displays where space is at a premium, it is desirable to reduce the thickness of such backlights while still maintaining the area of illumination. Backlights thus require reduced aspect ratios, defined as the ratio of the thickness of the backlight to the length of the illumination area.

One type of a backlight utilizes of a light source, such as a light-emitting diode (LED), that is coupled to a waveguide into which light is injected. The light source is typically mounted at an outer peripheral edge of the waveguide and is energized to emit light into the waveguide. The light undergoes several reflections between the surfaces of the waveguide until being transmitted through a top surface to illuminate the display.

One difficulty associated with such backlights is they do not produce a uniform intensity across the surface of the waveguide. The light loses intensity as it propagates outward from the light source. Consequently, as the distance from the light source increases, the intensity of the light transmitted out of the waveguide decreases. This results in the portions of the waveguide distal of the light source having reduced intensity.

There is therefore a need for an efficient backlight having a low aspect ratio that provides a substantially uniform illumination profile across the entire area of illumination.

Summary of the Invention

One aspect of the present invention relates to a lighting apparatus for illuminating an illumination area of a display. The lighting apparatus comprises a waveguide adapted for mounting adjacent the display so as to illuminate the illumination area of the display. The waveguide comprises a top surface having an optical output area corresponding in size to the illumination area, a bottom surface spaced apart from the top surface, and a side surface extending between the top and bottom surfaces. Reflective material is positioned adjacent the bottom and side surfaces of the waveguide. At least one light source is mounted to input light proximate to a periphery of the waveguide between the top and bottom surfaces. The waveguide further comprises a light ejector on one of the top and bottom surfaces configured to redirect light propagating between the surfaces towards the top surface for transmission therethrough. The light ejector is arranged to provide a preselected illumination profile across the optical output area of the top surface.

Another aspect of the invention relates to a lighting apparatus comprising a waveguide having pair of opposed surfaces. Each of the surfaces is at least partially reflective and at least one of the surfaces is partially transmissive. Each of the surfaces have a reflectivity greater than the transmissivity of the at least one surface.

Another aspect of the invention relates to a lighting apparatus comprising a planar waveguide having a peripheral edge and a light source mounted proximate to the peripheral edge so as to direct light into the waveguide along a path extending from the light source towards an optical diverter in the waveguide. The optical diverter in the path redirects light rays away from the path towards the periphery of the waveguide.

Yet another aspect of the invention relates to a lighting apparatus comprising a top surface, a bottom surface in spaced relationship to the top surface and cooperating with the top surface to form a waveguide having a thickness defined by the distance between the top and bottom surfaces, and at least one solid state point light source mounted to input light into the waveguide between the surfaces. One of the surfaces has a curvature relative to the other surface which yields a substantial variation in the thickness of the waveguide in a selected region of the waveguide. The variation follows a geometric contour selected to redirect light propagating between the surfaces of the waveguide so that the redirected light exits the top surface of the waveguide.

Another aspect of the invention relates to a lighting apparatus comprising a waveguide having top and bottom surfaces and a peripheral edge. The waveguide has a thickness defined by the distance between the top and bottom surfaces. The thickness at the peripheral edge is substantially different than the thickness in a region intermediate opposing sides of the peripheral edge. The thickness has a geometry selected to enhance ejection of light from the top surface intermediate the opposing sides. At least one light source is disposed proximate to the peripheral edge to introduce light into the waveguide between the top and bottom surfaces.

Yet another aspect of the invention relates to a lighting apparatus comprising a waveguide of solid material, the waveguide having a top surface, a bottom surface and a side surface. A light source is mounted to input light into the waveguide and reflective material is juxtaposed with one of the top and bottom surfaces wherein at least a portion of one of the top and bottom surfaces has a pattern of elongate structures that generally increase in density with distance from the light source.

In yet another aspect of the invention, there is disclosed an illumination and display device comprising an optical waveguiding layer and an illumination coupler embedded in an interior region of the waveguiding layer. In one embodiment, the illumination coupler includes one or more semiconductor light emitting devices. A portion of the optical waveguiding layer has a pair of symmetric (a) nonplanar, curved surfaces, or (b) a plurality of flat, planar surfaces approximating the nonplanar, curved surface. The pair of symmetric surfaces form a cusp lying on the axis of the one or more semiconductor light emitting devices to produce total internal reflection of light from the one or more semiconductor light emitting devices into the waveguiding layer. Display elements are formed on surfaces of the waveguiding layer to cause light to be emitted from the waveguiding layer.

Another aspect of the invention relates to an illumination and display device, comprising an optical waveguiding layer, with an illumination coupler embedded in an interior region of the waveguiding layer, wherein the

illumination coupler includes one or more semiconductor light emitting devices. Display elements formed on the surface of the waveguiding layer cause light to be emitted from the waveguiding layer.

Yet another aspect relates to an illumination and display device, comprising an optical waveguiding layer with an illumination coupler embedded in an interior region of the waveguiding layer. In one embodiment, the illumination coupler includes one or more semiconductor light emitting devices, each of the one or more semiconductor light emitting devices having a longitudinal axis that is parallel to the surface of the optical waveguiding layer. A hole or recess may be formed in the interior region of the waveguiding layer where the one or more semiconductor light emitting devices is placed. The device also may comprise display elements formed on the surface of the waveguiding layer to cause light to be emitted from the waveguiding layer.

A further aspect of the invention is directed to an illumination device comprising a waveguide having an illumination coupler embedded in an interior region thereof. The waveguide has generally parallel top and bottom surfaces outside of the interior region such that light is guided therebetween. The illumination coupler comprises a refractive index interface configured to capture light rays propagating along a line that forms less than the critical angle of total internal reflection with respect to at least one of the top and bottom surfaces, such that the captured light rays are injected therebetween for propagation outside of the interior region. In one embodiment, the illumination coupler comprises a surface configured for total internal reflection of light incident thereon. The illumination coupler of this embodiment is integrally formed with the waveguide from a single piece of transparent material, and the reflecting surface is uncoated. A point source of light is disposed at least partially, preferably fully, within a cavity formed in the waveguide adjacent the total internal reflecting surface. Display elements may be included on at least one of the surfaces for ejecting light from the waveguide. Additionally, diffusive reflective material may be included on at least one of the top and bottom surfaces.

In yet another aspect of the invention, there is disclosed a lighting apparatus, comprising a device that emits light and an optical cavity that is formed by diffusive reflective surfaces, the cavity having an output region through which light from the cavity passes. The light emitting device is mounted to supply light to the cavity while being hidden from direct view through the output region. The cavity has a diffusely reflective surface area and the output region also has an area. The ratio of the area of the output region to the sum of (i) the area of the output region and (ii) the surface area of the cavity is at least 0.05. Additionally, the cavity has a depth and the output region has an edge to edge bisector dimension, the ratio of the depth to the bisector dimension being significantly less than 0.1. The lighting apparatus additionally comprises an angular spectrum restrictor positioned to restrict output illumination through the output region to a predetermined range of angles.

Another aspect of the invention involves a method of lighting. The method comprises producing illumination from an optical cavity formed by diffusely reflecting surfaces and outputting illumination from the cavity through an output illumination region. Producing of the illumination comprises directing light rays from a source of illumination into the cavity such that the source of the illumination is not visible through the output illumination region. The method further comprises restricting the angular spectrum of illumination from the output illumination region to a predetermined range of angles, and mounting the optical cavity to illuminate at least a portion of a room.

In another aspect of the invention, there is disclosed a method of manufacturing a lighting apparatus. One embodiment of the method comprises wrapping a flexible sheet of reflective material around one side of a tubular light source, juxtaposing a member forming an optical cavity with another side of the tubular light source so that light from the source is introduced into the optical cavity, and attaching the flexible sheet to the member such that the sheet retains the tubular source in juxtaposition with the member.

Brief Description of the Drawings

These and other features of the invention will now be described with reference to the drawings of a preferred embodiment, which are intended to illustrate and not to limit the invention, and in which:

Figure 1 is a perspective view of wristwatch incorporating one embodiment of a lighting apparatus;

Figure 1A is a cross-sectional view of the watch of Figure 1 taken along line 1A-1A;

Figure 2 is a top plan view of the lighting apparatus used to illuminate the watch of Figure 1;

Figure 3 is a cross-sectional side view of the lighting apparatus of Figure 2 taken along the line 3-3;

Figure 4 is a cross-sectional view of the lighting apparatus of Figure 2 taken along the line 4-4;

Figure 4A is an enlarged view of a portion of Figure 4;

Figure 4B is a cross-sectional view similar to that of Figure 4, but with elongate structures on the top surface;

Figure 4C is a cross-sectional view similar to that of Figure 4, but with reflective material surrounding the entire waveguide;

Figure 5 is a top plan view of an alternative embodiment of a waveguide for use in the lighting apparatus of Figure 2;

Figure 6 is a top plan view of yet another embodiment of a waveguide for use in the lighting apparatus of Figure 2;

Figure 7 is a top plan view of yet another embodiment of a waveguide for use in a lighting apparatus;

Figure 8 is a top plan view of a waveguide showing another embodiment of an optical diverter;

Figure 9 is a cross-sectional view of a lighting apparatus used with a light enhancing structure;

Figure 10 is a top plan view of a waveguide having a dimple for redirecting light rays;

Figure 11 is a cross-sectional side view of the lighting apparatus of Figure 10 taken along the line 11-11;

Figure 12 is a perspective view of an alternate embodiment of a lighting apparatus;

Figure 13 is a cross-sectional view of the lighting apparatus of Figure 12;

Figure 14 is a perspective view of a housing used with the lighting apparatus of Figure 12;

Figure 15 is a perspective view of a lighting apparatus including a total internal reflection region;

Figure 16 is cross-section view of the lighting apparatus of Figure 15 taken along the line 16-16;

Figure 16A is an enlarged view of a portion of Figure 16;

Figure 17 is a perspective view of an alternative embodiment of a lighting apparatus including a total internal reflection region;

Figure 18 is a cross-sectional view of the lighting apparatus of Figure 17 taken along the line 18-18;

Figure 19 is a schematic side view of a prior art "bullet lens" LED;

Figure 20 is a schematic side view of a prior art "bare" LED;

Figure 21 is a perspective view of an exit sign incorporating an alternative embodiment of a lighting apparatus;

Figure 22 is a rear perspective view of an automobile having taillights that incorporate a lighting apparatus;

Figure 23 is a top view of a wrist watch incorporating an alternative embodiment of a lighting apparatus;

Figure 24 is a cross-sectional side view of the exit sign of Figure 21 taken along the line 24-24;

Figure 25 is a perspective view of an exit sign incorporating yet another embodiment of a lighting apparatus;

Figure 26 is a side view of an exit sign incorporating extractive display elements;

Figure 27 is a side view of an extractive display element;

Figure 28 is a side view of an alternative embodiment of an extractive display element;

Figure 29 is a perspective view of an exit sign incorporating circular grooves for extracting light; and

Figure 30 is a cross-sectional side view of the exit sign of Figure 29.

Detailed Description of the Preferred Embodiment

Referring to Figures 1 and 1A, one embodiment of the present invention is utilized as a back lighting apparatus 26 for a wristwatch 20. Although the wristwatch 20 is shown having a generally circular shape, it will be appreciated that the wristwatch may have any of a variety of shapes.

An outer housing 22 of the wristwatch 20 encloses a thin disk 30 of substantially transparent material that is spaced below a watch crystal 24. The disk 30 has an upper display surface 32 and an opposed bottom surface 34. The display surface 32 includes indicia 35 (Figure 1), such as numerals for indicating time, although other indicia could also be displayed. Two hands 36 of the watch 20 are mounted for rotation about a stem 38 that extends through the disk 30. The stem is driven by a watch mechanism 40 in a well known manner. Alternatively, the disk 30 may comprise a liquid crystal display in which indicia, such as the hands and numerals, are electrically generated.

Referring to Figure 1A, the lighting apparatus 26 is interposed between the disk 30 and watch mechanism 40 for illuminating the disk 30. The lighting apparatus 26, which is preferably in contact with the disk 30, includes a waveguide 42 and a light source 44 positioned along a peripheral edge of the waveguide 42.

In the illustrated embodiment, the housing 22 supports the disk 30 and the lighting apparatus 26 in juxtaposed relationship to each other. The disk 30 is mounted so that its periphery is supported by a first annular lip 46 which partially covers the display surface 32 to define a viewing area or illumination region of the display surface 32. The waveguide 42, which has a diameter slightly larger than that of the disk 30, is mounted so that its periphery is supported by a second annular lip 48 in the housing 22. The second annular lip 48 is sized to shield the light source 44 from being directly visible through the illumination region of the display surface 32. By way of example, the diameter of the illumination region may be 27 mm.

As shown in Figure 2, the waveguide 42 has a circular shape optimal for illuminating a circular watch, although other shapes may be utilized for various applications. The light source 44 is mounted within a triangular or V-shaped notch 50 in the peripheral edge of the waveguide 42. The notch 50 serves as an optical diverter which redirects light transmitted by the light source 44, utilizing refractive index differences at the interface 52 formed by the sides of the notch 50. In a preferred embodiment, the V-shaped optical diverter 50 is symmetrical such that a line passing through its apex and the center of the waveguide 42 bisects the V-shaped notch.

In a preferred embodiment, the light source is a single, solid state, point source of light, such as a light emitting diode (LED) 44 mounted on a carrier or circuit board (not shown). The carrier on which the LED 44 is mounted is attached to the waveguide at the back of the notch 50 (i.e., the open end opposite the apex) utilizing an adhesive (not shown). The LED 44, which is typically in the form of a cube of solid state material that emits light from each of multiple faces (i.e., its top surface and four sides), is spaced from the sides of the notch 50 with air therebetween. The difference in index of refraction between the waveguide and the air creates the refractive index interface 52 that causes light to refract as the light passes into the waveguide 42. In accordance with this advantageous feature, a substantial fraction of the light passing through the interface 52 is refracted toward opposite sides of the waveguide 42 (i.e., the sides generally adjacent to and on opposite sides of the light source 44). In this manner, regions of the waveguide 42 that are located to the sides of the light source 44 are efficiently illuminated, and the diverter 50 thereby contributes to uniform illumination.

The waveguide 42 is preferably comprised of a material that is transparent to light produced by the LED 44, such as a transparent polymeric material, and may be manufactured by various well-known methods, such as machining or injection molding. Preferred materials for the waveguide 42 are acrylic, polycarbonate, and silicone. Acrylic, which has an index of refraction of approximately 1.5, is scratch resistant and has a lower cost relative to polycarbonate. Polycarbonate, which has an index of refraction of approximately 1.59, has higher temperature capabilities than acrylic. Polycarbonate also has improved mechanical capabilities over acrylic. Silicone has a refractive index of approximately 1.43. The refractive index of air is 1.0. The dimensions of the waveguide 42 may vary, although the waveguide 42 is desirably very thin relative to its length so as to provide a low profile. The distance between the top surface 56 and the bottom surface 58 is preferably on the order of 1-3 mm, while the diameter of the waveguide 42 is typically at least 2.0 mm.

As shown in Figure 2, a plurality of display elements comprising elongate structures 54 extend across the waveguide 42 for redirecting light propagating within the waveguide 42. Although illustrated as lines, the elongate structures 54 have a three-dimensional shape, as described in detail below. In the illustrated embodiment, the elongated elongate structures 54 are arranged in a pattern consisting of intersecting lines that extend radially outward from a common point at the center of the waveguide 42 through which the stem 38 passes. The elongate structures 54 are preferably spaced apart by an equal angular distance, such as 0.3 degrees. It has been found that the pattern of radial grooves utilized in the watch 20 are highly effective in eliminating "shadows" that would otherwise be cast by the watch stem 38.

As illustrated in Figure 3 the waveguide 42 includes a top surface 56 and an opposed bottom surface 58, which are substantially parallel to each other. A side or edge surface 60 extends between the top and bottom surfaces 56, 58 along the periphery of the waveguide 42. While the surfaces 56, 58 are typically flat for backlight applications, the surfaces 56, 58 may also be formed as curved surfaces, such as when the waveguide is utilized as a taillight for an automobile.

A diffusive reflective material 62 is positioned adjacent the bottom surface 58 and side surface 60 of the waveguide 42, with the material 62 also preferably covering a peripheral strip 61 on the top surface 56. In the embodiment illustrated, the peripheral strip 61 is sufficiently wide to cover the notch 50 so that the top, the bottom, and the outside edge of the notch 50 are covered by the reflective material 62. The peripheral strip is also preferably sufficiently wide that the LED 44 cannot be viewed directly from viewing angles of 75 degrees or less (it being understood that the viewing angle is measured from a line normal to the top surface 56). By way of example, the peripheral strip may be equal in width to the width of the second annular lip 48 of the watch 20 (Figure 1).

The diffusive reflective material 62, which has a reflectivity of at least 88% may comprise a single layer or multiple layers of diffusely reflective tape, such as DRP™ Backlight Reflector, manufactured by W.L. Gore & Associates. DRP™ Backlight Reflector has a reflectivity of approximately 97%-99.5%, depending on its thickness and the wavelength of the light. Alternatively, the reflective material 62 could comprise a paint or coating that is applied to the surfaces 58 and 60, such as white house paint or a more exotic material, such as the Labsphere Corporation's Spectraflect paint. Spectraflect paint's reflectivity is considerably higher than house paint, roughly 98%, while the reflectivity of a good white house paint is approximately 90%.

Because the reflective material 62 covers the bottom and side surfaces 58, 60, as well as the peripheral strip on the top surface 56, light will be emitted from the waveguide in an output illumination region or aperture 65 comprising the central uncovered portion of the top surface 56 (i.e., the portion of the surface 56 interior to the peripheral strip 61). It will be appreciated that light rays incident on the top surface 56 at an angle of incidence (i.e., the angle of the ray relative to a line normal to the surface) at least equal to a critical angle will be totally internally reflected toward the bottom surface 58. That is, the top surface 56 will reflect all of such light back into the waveguide 42. Light rays having an angle of incidence less than the critical angle are transmitted through the top surface 56. The value of the critical angle is dependent on the difference in the indices of refraction between the waveguide 42 and the disk 22, as is known by those skilled in the art. For a waveguide 42 having a refractive index of 1.5, the critical angle is approximately 42° when surrounded by air.

As shown in Figures 4 and 4A, the elongate structures 54 may comprise grooves defined by surfaces 64 (Figure 4A) that form a substantially triangular or V-shaped cross-section. The elongate structures 54 advantageously alter the angle of incidence of light reflected toward the top surface 56 to enhance passage therethrough. That is, the angled surfaces 64 reflect light toward the top surface 56 at an angle of incidence less than the critical angle so that such light passes through the top surface 56 rather than being totally internally reflected. The elongate structures 54 are thus used to "eject" light rays that might otherwise be totally internally reflected by the top

surface 56. This advantageously increases the optical efficiency of the waveguide 42 by ejecting light that would otherwise experience energy loss through repeated reflections. The elongate structures are defined by a depth D and an apex angle θ that bisects the V-shaped structure 54. In the preferred embodiment, depth D is in the range of 1-2 micrometers and the angle θ is approximately equal to 45 degrees. Preferably, an air gap is maintained within the V-shaped structure 54 (i.e., the grooves are not filled with reflective material).

The elongate structures 54 are preferably arranged to achieve generally uniform illumination profiles across the illumination output region of the waveguide. In preferred embodiments, the uniformity ratio of the output illumination region, which is defined as the ratio of the highest intensity to lowest illumination within such region is no more than 2 to 1.

Referring to Figures 4B, in another preferred embodiment, the elongate structures 54 are placed on the top surface 56 instead of the bottom surface 58. The remaining aspects of this embodiment are identical to those of the embodiment shown in Figure 4.

In an additional embodiment, shown in Figure 4C, the entire waveguide, including the top surface 56, bottom surface 58, and side surfaces 60 are covered by reflective material 63, which is preferably the same diffusely reflecting type as the material 62, but is partially transmissive and partially reflective. Additionally, the material 63 has a reflectivity that is greater than its transmissivity, that is, the reflectivity is greater than 50% and the transmissivity is less than 50%. In one preferred embodiment, which may be utilized in the watch 20, the reflectivity is about 96% and the transmissivity is about 4%. This embodiment provides an output illumination which is substantially uniform, even without the elongate structures 54, although such structures may still be desirable to reduce shadows from the watch stem 38 (Figure 1A). This embodiment is also advantageous in that the indica (numerals, etc.) may be applied directly to the reflective material 63, thereby eliminating the need for the display disk 30.

Various types of groove patterns may be utilized as to improve the uniformity of the illumination within the region to be illuminated, depending on the situation. Referring to Figure 5, the elongate structures 54 may be arranged in a pattern of nonintersecting arcuate lines that are arranged about the light source 44. In a preferred embodiment, the radius of curvature of the arcuate lines increases with distance from the point source 44. Additionally, the centers of the radius of curvature lie along a line passing through the point source and the center of the illumination region of the waveguide, with all such centers lying along such line (on the side of the waveguide that is further from the waveguide center than from the source 44). The arcuate lines are nonuniformly spaced apart to compensate for loss of intensity as the light propagates outwardly from the light source 44. Specifically, the spacing between the elongate structures 54 decreases as the distance from the light source 44 increases so that the density of the elongate structures 54 increases moving away from the light source 44. The increased density of elongate structures 54 desirably increases the ejection of light rays in these areas to compensate for the distance from the source 44.

As shown in Figure 6, the elongate structures 54 could also be arranged in a more complex pattern comprised of a combination of simpler patterns. For example, the patterns could take the form of arcuate lines that

emanate outward from the light source 44 and straight lines that extend radially outward from the center of the waveguide 42.

Figure 7 shows a rectangular-shaped waveguide 42. Such a waveguide is preferably used to illuminate a rectangular-shaped display, such as on cellular phones or personal digital assistants. Although reflective material is not shown, it will be understood that this embodiment may be constructed in the manner previously described. In the illustrated embodiment, multiple point light sources 44 are coupled to introduce light at spaced peripheral locations along the edge of the waveguide 42. Because multiple sources are employed, optical diverters such as the notch 50 are optional, and may or may not be included. The elongate structures 54 of this embodiment are arranged in concentric arcs around each of the light sources 44, although various other patterns are contemplated, including those discussed above.

Figure 8 illustrates an alternative embodiment in which elongate structures 54 are formed in a waveguide 42a by scratching a top or bottom surface of the waveguide with an abrasive, such as sandpaper. The abrading is preferably non uniform such that the density of the scratches or grooves increase with distance from the light source 44. By way of specific example, in the rectangular waveguide shown in Figure 8, the grooves are directed along the length of the rectangle, rather than the width. The groove pattern is generally amorphous on a local basis, but is substantially directional and nonrandom on a global basis.

Figure 8 also illustrates an alternative embodiment of an optical diverter that is formed by a triangular opening 50a that extends through a waveguide 42a at its periphery. The opening is between the light source 44 and the output illumination region of the waveguide 42, and a line drawn between the source and the center of such region bisects the triangle while passing through its apex. As shown, the triangular opening 50a has two sides which intersect at a location proximate to the light source to form such apex.

The triangular opening 50a is filled with a material, such as air, which has a refractive index significantly different from that of the material of the waveguide 42. The shape of the optical diverter 50a and the refractive index difference cause light emanating from the light source 44 to intersect the optical diverter 50a at an angle of incidence which results in total internal reflection of the light towards opposite sides of the waveguide 42. Thus, the optical diverter 50a, like the notch 50, redirects the path of light rays to regions of the waveguide that are on opposite sides of the light source 44.

Referring to Figure 9, the top surface 56 of the wave guide 42 (or alternative embodiments thereof) may be covered with an angular spectrum restrictor 72 that restricts the output radiation pattern from the output illumination region 65 of the waveguide to a predetermined range of angles (in this context, the term "spectrum" is used in the sense of an angular spectrum rather than a wavelength spectrum). The angular spectrum restrictor 72 comprises a planar micro-replicated optical structure, such as a holographic diffuser, binary diffractive diffuser, or array of microlenses. In the preferred embodiment, the angular spectrum restrictor 72 comprises a brightness enhancing film (BEF) which, in addition to restricting the output spectrum, enhances the intensity of the illumination in the output illumination region 65. The BEF 72 is preferably placed in physical contact with a diffuser 70 to collectively form a light quality enhancing apparatus 73. Preferably, the diffuser 70 is disposed between the BEF

72 and the waveguide 42 and in contact with the waveguide 42. The purpose of the diffuser is to remove the effect of residual nonuniformities, such as cosmetic imperfections, in the surfaces of the waveguide 42. The diffuser 70 is comprised of translucent material, typically a thin plastic surface or volume diffuser, both of which are characterized by very low absorption and minimum energy losses.

As mentioned above, the BEF 72 restricts output illumination within defined boundary lines and also increases the brightness within the output illumination region 65. In the preferred embodiment, the BEF 72 is a commercially available thin film having linear pyramidal structures, such as 3M model 90/50 film. The BEF transmits only those light rays from the waveguide that satisfy certain incidence angle criteria with respect to the top surface 56. All other light rays are reflected back into the waveguide 42 toward the bottom or side surfaces 58 and 60, respectively, where they are reflected by the reflective material 62. In effect, the reflected rays are "recycled" until they are incident on the BEF 72 at an angle which permits them to pass through the BEF 72.

As is well known, a BEF, such as the BEF 72, concentrates illumination within boundaries defined by a pair of mutually inclined planes (which in cross-section form a "V") and does not provide concentration in the orthogonal direction. In some applications of the invention, it is preferable to concentrate the illumination two orthogonal directions, and for such applications, a second BEF oriented orthogonally to the first BEF, may be included. With two crossed BEFs, the emission from the waveguide will be within boundaries resembling a truncated inverted cone. As is conventional in the art, the boundaries are defined by the full-width, half-maximum (FWHM) of the optical intensity. By way of example, the boundaries of the cone may be inclined relative to a line normal to the top surface 56 by an angle of no more than about 35 degrees, in which case the illumination will be visible only within viewing angles of 35 degrees or less.

Figures 10 and 11 illustrate a top and a cross-sectional side view, respectively, of yet another embodiment of the lighting apparatus 26 that utilizes a waveguide 42b. As shown in Figure 10, a light source 44 is mounted adjacent an optical diverter 50 and the waveguide 42b is covered with reflective material 62 or 63 in the manner described above with respect to the waveguide 42 shown in Figures 2-4C. The top surface 56 of the waveguide 42b includes a depressed region or dimple 74 that redirects light rays propagating in the waveguide 42b, as described below. As best shown in Figure 22, the dimple 74 comprises a surface 75 of smooth and continuous curvature relative to the bottom surface 58 so as to define an area of reduced thickness of the waveguide 42b. As used herein, the "thickness" of the waveguide 42 refers to the distance between the top surface 56 and the bottom surface 58. In the preferred embodiment, the variation of thickness (e.g., depth of the dimple 74) is at least equal to 5% of the thickness of the waveguide 42 outside the dimple 74.

The dimple 74 is preferably centrally located with respect to the periphery of the waveguide 42, covers an area at least 70% that of the top surface 56, and defines an elliptical shape in a cross-section parallel to the top surface 56. For the rectangular waveguide, shown in Figure 10, the geometric contour of the dimple 74 defines a super ellipse in accordance with the following equation:

$$(x/a)^n + (y/b)^n = 1$$

where n and p are both greater than 2, a is the length of the major axis of the ellipse, and b is the length of the minor axis of the ellipse. As is well known, increasing the exponents n and p above two causes the shape of the ellipse to become less oval and more rectangular. These exponents are preferably selected so that the curved edges of the dimple 74 extend substantially to the edges of the output illumination region of the waveguide.

According to an advantageous feature of the waveguide 42b, the surface 75 of the dimple 74 follows a geometric contour that redirects light propagating between the top surface 56 and the bottom surface 58, so that the redirected light more readily and uniformly exits the top surface 56 of the waveguide 42b. Specifically, some light will be incident on the curved dimple surface 75 at an angle of incidence which causes it to refract through the top surface 56. Light having an incident angle within the critical range will be totally internally reflected. Reflected light will be directed toward the bottom surface 58 or side surface 28. The reflective material 62 adjacent these surfaces reflects the light toward the top surface 56 for transmission therethrough. Light reflected from the bottom surface 58 in the region of the dimple 74 will typically be incident on the dimple surface 7517-20 at a reduced angle of incidence which permits the light to be transmitted therethrough. Other embodiments may utilize multiple light sources 44 with a single and multiple dimples 74.

As shown in Figures 12 and 13, another embodiment of the lighting apparatus, referred to as lighting apparatus 170, comprises a rectangular waveguide 172 having a top surface 174 (Figure 13) and an opposed bottom surface 176 (Figure 13). Four side surfaces 178a (Figure 13), 178b (Figure 13), 178c, and 178d extend between the top surface 174 and bottom surface 176. A pair of lamps 180a, 180b are mounted adjacent the opposing side surfaces 178a and 178b. The lamps 180a, 180b are preferably held in place by diffusive reflective material 182 that surrounds the lamps 180a, 180b and covers a significant portion of the waveguide 172, as described more fully below.

The lamps 180 preferably comprise fluorescent tubes of circular cross-section which extend along substantially the entire length of the sides 178a, 178b. As best shown in Figure 13, the sides 178a and 178b of the waveguide 172 are preferably each concave to form respective elongate channels that extend along the entire length of the sides 178a, 178b. Such channels are configured to flushly receive respective surfaces on sides of the lamps 180a, 180b. An optical coupling gel 184 is interposed between the lamps 180a, 180b and the sides 178a, 178b of the waveguide 172 in order to reduce repetitive index differences by eliminating air gaps therebetween and thereby efficiently couple light from the lamps 180a, 180b to the waveguide 172. Alternatively, the lamps 180a, 180b may each comprise a linear array of point sources, such as LEDs (not shown).

In the preferred embodiment, the reflective material 182 entirely covers the bottom surface 176 and wraps around the lamps 180a, 180b to secure and retain them in juxtaposition with the side surfaces 178a, 178b of the waveguide 172. The reflective material 182 also wraps around the sides 178c, 178d and extends onto a portion of the top surface 174 so as to form a peripheral strip 186 (Figure 12) that extends around the perimeter of the top surface 174.

Accordingly, the interior surface of the reflective material creates an optical cavity that is filled by the solid waveguide 172 and lamps 180. The portion of the top surface 174 of the waveguide 172 that is not covered by reflective material 182 forms an illumination output region or aperture 188 through which light is output from the waveguide 172. The peripheral strip 186 is sufficiently wide to shield the lamps 180 from being viewed directly through the aperture 188. In the illustrated embodiment, the aperture 188 has a rectangular shape. It will be appreciated that the aperture 188 could also be circular or take on any other of a wide variety of shapes suited for various applications.

An angular spectrum restrictor 190, such as described above in connection with Figure 9, may be juxtaposed with the aperture 188. In a preferred embodiment, the angular spectrum restrictor comprises a brightness enhancing film (BEF) 190, as described above, utilized with a diffuser 192 to collectively form a light quality enhancing (LQE) apparatus 196. A color filter 198 may be added to the LQE apparatus 196, if desired. In one embodiment, the edges of the LQE apparatus 196 are interposed between the waveguide upper surface 174 and the peripheral strip 186 of the reflective material 182 so that the reflective material 182 secures the LQE apparatus 196 to the waveguide 172. Alternately, the LQE apparatus 196 may be positioned over the reflective material 182 and secured using an adhesive.

The waveguide 172, lamps 180, reflective material 182, and LQE form a lighting assembly that may be used as a downlight or a backlight. The reflective material 182 reflects light from the lamps 180a, 180b towards the waveguide 172 so that substantially all of the light is coupled into the waveguide 172 through sides 178a, 178b and the optical gel 184. The light undergoes diffuse reflections within the waveguide 172 before exiting from the waveguide 172 through the aperture 188. In particular, the light reflects against the diffusive reflective material 182 that covers the bottom surface 176, surrounds the side surfaces 178a-178d, and covers the peripheral strip 186.

In the lighting apparatus 170, pertinent design factors include the area of the illumination aperture 188, and the combined cavity area, that is the sum of (i) the surface area of the optical cavity and (ii) the area of the aperture 188. For reasonably efficient use of the energy emitted from the lamps 180a, 180b the ratio of the area of the aperture 188 to the combined cavity area is preferably at least 0.20, and in one preferred embodiment the ratio is at least 0.40.

Another parameter of interest is the edge-to-edge dimension of the aperture 188, particularly the dimension referred to herein as the bisector dimension. This bisector dimension is an edge to edge dimension that extends between opposing sides of the aperture 188, along a line passing through the geometric center of the aperture 188, and substantially perpendicular to the aperture edges at such opposing sides (or a tangent thereto in the case of a circular aperture). In one embodiment, all of the edge-to-edge bisector dimensions of the output region are at least 4 inches in length. The ratio of the depth of the cavity to the edge to edge bisector dimensions affects both the intensity and uniformity of the light

emanating from the opening formed by the aperture 188. In one preferred embodiment of the present invention, the ratio of the depth of the cavity to any of the edge to edge bisector dimensions is significantly less than 0.1, and preferably no more than 0.08. In another embodiment, only the longest bisector dimension satisfies these ratios. In yet another embodiment, the ratio is no more than 0.03.

The waveguide 172 is comprised of material that is transparent to light produced by the lamps 180a, 180b, such as a transparent polymeric material, and may be manufactured by various well-known methods, such as machining or injection molding. Preferred materials for the waveguide 172 are acrylic, polycarbonate, and silicone.

As mentioned above in connection with the previous embodiments, the reflective material 182 has a reflectivity of at least 90% and may comprise a single layer or multiple layers of diffusely reflective tape, such as DRP™ Backlight Reflector, manufactured by W.L. Gore & Associates. Alternately, the surfaces of the waveguide 172 may be coated with a reflective paint of the type described above.

The light emerging through the aperture 188 of the lighting apparatus 170 may be used to illuminate a display or to provide illumination for a room. In a preferred embodiment, the lighting apparatus 170 is used as a ceiling light fixture. By way of example, when used as a light fixture for a room, the waveguide 172 may be approximately 16"x 4" and approximately 6 mm thick. The diameter of the lamps 180 preferably match the thickness of the waveguide 172.

Referring to Figure 14, the lighting apparatus 170 may include a hollow housing 200 comprising a planar upper portion 202, side portions 204a-204d, and bottom portions 206a and 206b that together define a hollow space sized to receive the lighting assembly. The side portion 204a is pivotably mounted to one edge of the upper portion 202, thereby allowing it to be opened so that the lighting assembly may be slid into the hollow space within the housing 200. Rails may be positioned on the side portions 204b and 204c to facilitate insertion of the lighting assembly into the housing 200.

As shown in Figure 14, the bottom portions 206a and 206d define an opening 208 therebetween that is at least as large as the aperture 188. The lighting assembly is positioned within the housing 200 so that the illumination aperture 188 of the waveguide 172 is juxtaposed with the opening 208 in the housing 200. Power may be supplied to the lamps 180 in any known manner, such as through an electrical ballast 210 positioned in the housing 200 and connected to the lamps via electrical wires. When the lighting apparatus is illuminated, light emerges from the waveguide 172 through the aperture 188 and into the room.

Figures 15 and 16 illustrate yet another embodiment of a lighting apparatus utilizing a waveguide 42c. As best shown in Figure 15, the top surface of the waveguide 42 includes a total internal reflection (TIR) region 76 having a smoothly curved surface 80 (Figures 16 and 16A) defining a vortex shape that extends into the waveguide 42. Preferably, the region 76 has the shape of an equiangular spiral that forms

into a cusp 82. Referring to Figures 16 and 16A, the surface 80 has a curved shape that is symmetrical about a vertical axis 83 that extends through the cusp 82 and perpendicular to the top surface 56. A light source 44, preferably an LED, is mounted immediately below the cusp 82. The LED 44 is embedded in a correspondingly-shaped hole, channel, or recess 84 that extends into the bottom surface 58 of the waveguide 42c. In order to ensure good coupling into the waveguide 42c and reduce reflections at the interface between facets of the LED and corresponding sides of the recess 84, a transparent optical coupling agent, such as an adhesive or gel (not shown), may be used to fill any air gaps between the LED 44 and the waveguide 42a. The transparent optical coupling agent could be an epoxy, silicone, or any well-known organic or inorganic optical coupling materials. Preferably, the refractive index of the coupling agent is between that of the LED 44 and waveguide 42.

The surface 80 may be either a nonplanar, curved surface, or a nonplanar surface comprising of a plurality of flat surfaces approximating a curve that produces total internal reflection (TIR). As mentioned, the shape of the surface 80 is preferably a symmetric section of an equiangular spiral. However, other geometric shapes can be used to produce total internal reflection including symmetric sections of hyperbolae, parabolas, sine curves and circles, provided that such shapes are analytically shown to produce total internal reflection, as described below. Mathematical modelling of these shapes can be performed with an optical analysis software package such as ASAP by Breault Research of Tucson, Arizona. However, various parameters such as the waveguide thickness and the shape of the surface 80 must be optimized to optimize the coupling of light into the waveguide 42c.

The geometric contour of the surface 80 is selected so that the TIR cusp region 76 formed thereby totally internally reflects substantially all light rays directly emitted by the light source 44. Toward this end, the surface 80 is contoured such that substantially all light rays emitted from the light source 44 are incident on the surface 80 at an angle at least equal to the critical angle. This may be accomplished by calculating the range of possible incidence angles of light rays from the light source 44 at various local areas of the surface 86. The local areas are then oriented so that all rays are incident within the critical range. The local areas could be large in size so that the surface 80 consists of a collection of flat surfaces. As the size of the local areas decreases, the surface 80 forms into a smoothly curved surface having an equiangular spiral shape as shown in Figures 16 and 16A.

In the embodiment illustrated, the bottom surface 58, side surfaces 60, and the back of the LED are covered by the diffusive reflective material 62. When the light source 44 is energized, the light totally internally reflected from the surface 30 propagates within the waveguide 42 outside of the TIR cusp region 76. The reflective material 62 functions in the manner described with reference to the waveguide 42. This embodiment is particularly advantageous when the waveguide is utilized as a tail light lens for an

automobile. It is contemplated that multiple TIR cusp regions 76 could be positioned on a waveguide 42C, and thus the total combined area of illumination may be quite large.

Figures 17 and 18 illustrate an alternative embodiment of the TIR cusp region 76 used in a waveguide 42d. Referring to Figure 17, the TIR region 76 is elongated so as to define an elongated cusp 82a that extends along an axis 83. The TIR region 76 comprises top and bottom equiangular spiral curved surfaces 86, 88 (Figure 18) that symmetrically extend from either side of the elongated cusp 82a. In the illustrated embodiment, a TIR region 76 is located on both the top surface 56 and the bottom surface 58, although the TIR region could also be located on a single surface.

A light source 86 is mounted immediately below the elongated cusp 82. The light source 86 may consist of a single elongated light source that extends along the entire length of the cusp 82, such as a fluorescent tube. Alternatively, the light source 86 may consist of a plurality of point light sources, such as LEDs, that form a line aligned immediately below the length of the cusp 82. The tip of the elongated cusp 82 may be rounded to provide controlled leakage of light from the light source 86 in the area of the waveguide 42d immediately above the light source 86. This will eliminate dark spots above the light source 86.

The waveguide 42d shown in Figures 17 and 18 functions in essentially the same manner as the waveguide shown in Figures 12-13. That is, the TIR region 76 totally internally reflects substantially all light emitted by the light source 86. The symmetric pair of curved surfaces 86, 88 joined at the elongated cusp 82a provide total internal reflection (TIR) of the light from the light source 44 along either side of the axis 83. The cusp 82a divides the light from the light source 44 into two equal portions.

Because the TIR cusp regions 76 of Figures 15-18 reflect substantially all light incident thereon, these regions 76 will appear dark relative to portions of the waveguide outside the TIR regions 76. In situations where such dark spots are objectionable, the surface 80 should be contoured to be a less than perfect internal reflector so that a significant portion of the incident light leaks through the surface 80. The amount of leakage should preferably be no more than is necessary to substantially eliminate the dark spots, and provide an intensity in the TIR regions substantially equal to that of the surrounding region. Such leaky TIR regions thus provide substantially uniform output illumination across the entire output region of the waveguide.

LEDs have many desirable properties for optical display systems, including low cost and low driving voltage. LEDs are capable of producing various colors, such as red, green and blue. The driving voltage of an LED may vary from 1.8 volts to 4.0 volts, and the differential energy levels of the quantum mechanical bandgap produces these spectral colors. However, those skilled in the art will appreciate that other point sources may be used. Laser diodes (Lds) or superluminescent light emitting diodes could be used, as well as any semiconductor light emitting device.

Figure 19 shows a conventional prior art LED 110 in a "bullet lens" package. The LED 110 includes a housing 111 that encloses two electrical leads 112 connected to an anode 113 and a cathode 114. A layer 115 of Group III-V semiconductor compound, such as AlGaAs, GaAsP, or AlInGaP, is interposed between the anode 113 and cathode 114. A cup-shaped reflector 116 is positioned behind the semiconductor layer 115. The top portion of the housing 111 forms a hemispherical immersion lens 117 made of an acrylic or an epoxy.

When a voltage in the range of 1.8-4.0 V is applied between the anode 113 and cathode 114, the LED produces visible light energy according to the photoelectric effect. The reflector 116 reflects the light in an upward direction so that the light does not pass through the sides of the housing 111. The lens 117 focuses the light emitted by the semiconductor layer 115. The semiconductor material has a refractive index of approximately 3.4 and the index of refraction of the plastic package of the housing 6 is 1.5.

Figure 20 shows a conventional prior art "bare" light emitting diode 110a. The LED 110a includes a semiconductor layer 115a positioned on a flat base 117. A dielectric dome 118 covers the semiconductor layer 115. A reflector 116a is positioned between the base 117 and the semiconductor layer 115.

Figure 21 shows an exit sign 130 illuminated in accordance with another embodiment of the invention. The exit sign 130 consists of a planar waveguiding layer or waveguide 132 having a surface 134 on which an illumination coupling element 136 is centrally located. The illumination coupling element 136 produces and couples illumination from LEDs 140 into the waveguide 132. A plurality of display elements 142 are also located on the surface 134 for coupling the light from the waveguide 132 to an external viewer 144.

Referring to Figure 21, the display elements 142 have shapes that form the letters "E", "X", "I", and "T", although the display elements may form any of a wide variety of symbols and shapes for illumination. For instance, for illuminating a tail light (Figure 22), the display elements 142 might be in the form of elongate structures, such as horizontal or vertical lines or channels in the tail light surface. In an alternative embodiment for illuminating a watch or clock face (Figure 23), the display elements 142 might be in the form of numbers or dots on the dial. For a watch using display elements 142, a single LED could be located in the interior region of a circular waveguide on the watch face. Alternatively, four LEDs could be located in the interior of the watch face, with each LED illuminating one quadrant of the watch face, such as shown in Figure 23. Additionally, the LEDs could be arranged in a circular array with equiangular spacing.

Figure 24 illustrates a cross-sectional view of the waveguide 132. As shown, the display elements 142 are concave structures that extend into the surface 134. The display elements 142 could

also be convex structures. The surfaces of the display elements 142 may either be smooth surfaces or rough surfaces to increase optical diffusion.

As shown in Figure 24, the illumination coupling element 136 includes one or more LEDs 140 that are embedded in a bottom surface 146 of the waveguide 132. The LEDs 20 are preferably oriented with their longitudinal axes normal to the bottom surface 146 of the waveguide 132. The LEDs 140 may be embedded in either surface 142 or 146 of the waveguide 132, but are preferably embedded in surface opposite location of the display elements 142. The LEDs 140 could consist of either "bullet lens" LEDs or "bare" LEDs.

As shown in Figure 24, the illumination coupling element 136 comprises a TIR region 150 having curvilinear surfaces 152, 154 similar to surfaces 86 and 88 described above with respect to Figures 14 and 15. The surfaces 86 and 88 curve toward the LED 140 to receive impingement of light from the LED 140. The surfaces 86 and 88 are TIR surfaces with respect to such impingement of light. As shown, the surfaces 86, 88 form a cusp directed toward the LED 140 with the LED 140 having an end terminating in alignment with the cusp to direct substantially all light from the LED directly toward and adjacent the cusp. The TIR region operates in substantially the same manner described above and therefore no further description is provided.

The illumination coupling element 136 desirably includes a lens element 90 that is integrally formed with the surface of the waveguide that is adjacent to the LED 140. The optical power of the lens element 90 is caused by a refractive index differential between an air gap surrounding the LED 140, the LED 140, the transparent optical coupling agent, and the waveguide 132. In this embodiment of the waveguide 132, the transparent optical coupling agent and the material of the LED 140 preferably all have an index of refraction of about 1.5. An air gap around the LED 140 defines a volume with a refractive index of about 1.0 to cause refraction of light.

The lens element 90 may optionally be either convex or concave. A convex lens element 90 converges light from the LED 140 to reduce the angular extent of the light radiation from the LED 140. In one embodiment, the focal power of convex lens element 90 is sufficient to collimate the light rays. A concave lens element 90 diverges light rays emanating from the LED 140 to increase the angle of the light rays on the surfaces 152 and 154. This increases the likelihood of light rays intersecting the surfaces 152 and 154 at an angle of incidence greater than the critical angle.

Figure 25 illustrates another embodiment of an exit sign 130 generally comprising a waveguide 132a. In this embodiment, LEDs 140 are positioned facing outwardly within a circular coupling element 148 located in an interior light injection region of the waveguide 132a. The longitudinal axes of the LEDs 140 are desirably oriented parallel to the plane of the surface 134. Although Figure 25 shows four LEDs 140 separated by 90° angles in the coupling element 148, it will be appreciated that any number of LEDs

140 can be arranged around the perimeter of the coupling element 148. The LEDs 140 may also be arranged in shapes other than circles, with the longitudinal axes preferably aligned parallel to the waveguide 132a , such as, for example, ovoid, rectangular, square, and linear shapes.

The coupling element 148 may either be integrally formed with the waveguide 132a or it may be modularly inserted into a corresponding hole or recess in the waveguide 132a so that light is injected through the sides of the hole and perpendicular thereto. For a modular configuration, LEDs 140 are desirably first mounted onto the coupling element 148 and then the coupling element 148 is inserted into the hole or recess in the waveguide. A modular insertion technique provides advantages in manufacturing by making it easier to manipulate a plurality of light emitting diodes (LEDs) simultaneously. If the coupling element 148 is integrally formed in the waveguide 132a, the LEDs 140 are inserted directly into the hole or recess in the waveguide. In one possible application 'bare' LEDs may be grown directly on the surface of the waveguide.

In another embodiment shown in Figure 26, extractive display elements 300 are used in combination with a sign 130 comprising a waveguide 132c. An illumination coupling element 136 is used to inject light into the waveguide 132 in the manner described above. A plurality of extractive display element 300 and waveguiding cylinders 302 are patterned into the surface of the waveguide 132c, as described below. The extractive display elements 300 appear as a series of pointed bumps that are arranged in the shape of symbolic or nonsymbolic figures. Upon illumination through the waveguide 132c and the waveguiding cylinders 302, and in combination with illumination couplers, such as a TIR region described above, the extractive display elements 300 produce a particularly bright, point-like (or line-like) light pattern at the apexes (or vertexes) of the solid polygons.

Figure 27 shows a side view of an extractive display element 300 formed on the end of a waveguiding cylinder 302. The base of the extractive display element 300 is integral with the end of the waveguiding cylinder 302. Preferably, each of the waveguiding cylinders 302 has a diameter on the order of one-tenth of one inch (0.1"), although the diameter of a cylinder may be as small as on the order of one-thousandth of an inch (0.001").

In the embodiment shown in Figure 27, the extractive display element 300 is in the shape of a polygonal solid having three equilateral faces 304, 306, 308, and an apex 310 with 120 degree vertices. The number of faces on the extractive display element 300 is not limited to three, and could be any number from two or more. A two-sided extractive display element 300 would be a wedge shape at the end of the cylinder, appearing much like the tip of a screwdriver. A greater number of faces on the extractive display element 300 could include rectangular, hexagonal, octagonal, and circular shapes. In the case of a circular extractive display element 300, the cylinder preferably tapers to a conical tip. Any other wide variety of shapes, such as cross or star shapes, are also contemplated.

The shape of the extractive display element 300 produces a particularly bright, point-like (or line-like) light output at the apex (or vertex) 310. Light is transmitted by total internal reflection within the waveguiding cylinder 302 until it enters the waveguide cylinder 302 and extractive display element 300 through lateral portion 312. Light within the extractive display element 300 is confined within the equilateral faces 304, 306, 308 by total internal reflection until it comes within the vicinity of apex 310. Light is then efficiently coupled out of the display element 300 as a bright, point-like (or line-like) output by apex (or vertex) 310.

As shown in Figure 29, the length of the waveguiding cylinder 302 may be reduced so that the display element 142 consists of only the extractive display element 300 formed directly on the surface 134. These extractive display elements 300 are further disclosed in co-pending Patent Application Serial Number 08/683,757, entitled "Light Extractor Apparatus," assigned to the same assignee. It has been found that these extraction elements efficiently extracting excess of 90% of incident radiation with less than 10% backscatter.

The base of each waveguiding cylinder 302 is preferably formed integral with the surface of the waveguide 301 to facilitate ease of manufacturing. The extractive display elements 300 and waveguiding cylinders 302 may be formed by conventional methods of molding plastic articles, such as injection or compression molding.

The contrast of the sign 130 utilizing extracting display elements 300 may be equalized by varying the characteristics of the display elements 300 across the surface of sign 130. For example, the diameters of the cylinders 302 that are closer to the illumination coupling means may be made less than the diameters of the cylinders 302 that are farther away from illumination coupling means to compensate for the greater light intensity that is typically present in the central regions of the sign. Decreasing the diameter of the cylinder 302 reduces the quantity of light that is delivered to the apex (or vertex) of the extractive display element 300.

Figure 29 shows an exit sign 130 comprising a waveguide 132d. An illumination coupling means 318 is positioned in the interior of the waveguide 132d for injecting light into the waveguide 132d. The illumination coupling means include a plurality of LEDs 140. The waveguide 132d includes a series of concentric grooves 320 located on a back surface of the waveguide 132. The concentric circular grooves 320 preferably radiate outward from the central region of the waveguide 132d. The circular grooves 320 are positioned only in the areas where the symbolic or nonsymbolic characters of the sign are to be displayed and illuminated so that the circular grooves 320 form the shape of the characters. Preferably, utilizing concentric circular grooves 320 further optimizes the display by matching the symmetry of the light source or obtaining other desirable display properties.

As shown in Figure 30, the concentric circular grooves 320 are V-shaped structures that act to reflect light through the opposite side of the waveguide 132d. The grooves 320 define an angle between the surfaces of the "V," although the grooves may take other shapes than "V's". The circular grooves 320 differ from the display elements 142 both in the size and location. The depth of the circular grooves 320 may be only on the order of one-tenth of one percent (0.1%) to one percent (1%) of the waveguide 132d thickness.

The grooves 320 may be formed by any of a variety of methods including machining (mechanical, laser, or EDM), ablation, etching, stamping or embossing. They can also be formed initially over the entire surface of the waveguide and then subsequently filled in with an index matching material in all of the areas except those corresponding to the characters of the display. A decal film or screen may be applied to form the characters or to subsequently remove all but the selected areas. It is also possible to optimize the display characteristics by changing the properties of the grooves 320 at different points on the display. The spatial frequency, width or depth of the grooves 320 may increase at regions further removed from the illumination coupling means 318 in order to obtain desirable display characteristics.

Although the foregoing description of the preferred embodiments have shown, described, and pointed out certain novel features of the invention, it will be understood that various omissions, substitutions, and changes in the form of the detail of the apparatus as illustrated as well as the uses thereof, may be made by those skilled in the art without departing from the spirit of the present invention. Consequently, the scope of the present invention should not be limited by the foregoing discussion, which is intended to illustrate rather than limit the scope of the invention.

WHAT IS CLAIMED IS:

1. A lighting apparatus for illuminating an illumination area of a display, comprising:

a waveguide adapted for mounting adjacent said display so as to illuminate said illumination area of said display, said waveguide comprising a top surface having an optical output area corresponding in size to said illumination area and a bottom surface spaced apart from the top surface, and a side surface extending between the top and bottom surfaces;

reflective material positioned adjacent said bottom and side surfaces of said waveguide; and

at least one solid state point source of light mounted to input light proximate to a periphery of said waveguide between the top and bottom surfaces, said waveguide comprising a light ejector on one of said top and bottom surfaces configured to redirect light propagating between said surfaces towards said top surface for transmission therethrough, said light ejector arranged to provide a preselected illumination profile across said optical output area of said top surface.

2. The lighting apparatus of Claim 1, wherein said light ejector comprises a first set of elongate structures arranged in a pattern selected from the group consisting of intersecting straight lines and nonintersecting arcuate lines.

3. The lighting apparatus of Claim 1, wherein the pattern comprises intersecting straight lines which extend radially from a common center point.

4. The lighting apparatus of Claim 2, wherein the straight lines are angularly spaced apart by an equal angular distance.

5. The lighting apparatus of Claim 1, wherein said pattern comprises nonintersecting arcuate lines which are nonuniformly spaced apart in such a manner as to compensate for loss of intensity as the light propagates outwardly from the source.

6. The lighting apparatus of Claim 5, additionally comprising a second solid state point source of light, wherein said light ejector further comprises a second set of elongate structures on said bottom surface configured to redirect light propagating between said surfaces towards said top surface for transmission therethrough, said second set of elongate structures being in a pattern of nonintersecting arcuate lines.

7. The lighting apparatus of Claim 1, wherein the light ejector comprises a region of reduced thickness of said waveguide.

8. The lighting apparatus of Claim 7, wherein said region of reduced thickness is thinnest at a central portion of the waveguide and gradually increases in thickness towards the periphery of the waveguide.

9. The lighting apparatus of Claim 1, wherein said light source comprises a light emitting diode which provides multifaceted emission substantially radially outward from said diode.

10. The lighting apparatus of Claim 1, wherein said top and bottom surfaces are formed by parallel, opposing surfaces of a solid material transparent to said light.

11. The lighting apparatus of Claim 1, additionally comprising an angular spectrum restrictor proximate said top surface to restrict illumination within a viewing angle.

AMENDED SHEET

12. The lighting apparatus of Claim 1, wherein said top and bottom surfaces are spaced by about 3 mm or less.

13. The lighting apparatus of Claim 1, wherein said waveguide is not substantially larger than said illumination region of said display.

14. The lighting apparatus of Claim 1, wherein said preselected illumination profile is a substantially uniform illumination profile.

15. The lighting apparatus of Claim 1, wherein said top surface has an area larger than said optical output area, and wherein said reflective material is also positioned adjacent a portion of said top surface outside of said optical output area.

16. The lighting apparatus of Claim 1, wherein said reflective material is in contact with said waveguide.

17. The lighting apparatus of Claim 1, wherein said reflective material comprises a diffusely reflective material.

18. A lighting apparatus, comprising a waveguide having pair of opposed surfaces, each of said surfaces being at least partially reflective and at least one of said surfaces being partially transmissive, each of the surfaces having a reflectivity greater than the transmissivity of said at least one surface.

19. The lighting apparatus of Claim 18, additionally comprising a light source mounted to input light between said pair of opposed surfaces.

20. The lighting apparatus of Claim 19, wherein said light source is a light emitting diode, and said opposed surfaces are parallel to each other.

21. The lighting apparatus of Claim 18, additionally comprising a brightness enhancing material adjacent the partially transmissive surface, said material concentrating illumination within a viewing angle.

22. A lighting apparatus, comprising:

a planar waveguide having a peripheral edge;

a light source mounted proximate to said peripheral edge so as to direct light into the waveguide along a path extending from the light source towards an optical diverter in the waveguide, said optical diverter in said path redirecting light rays away from said path towards the periphery of the waveguide.

23. The lighting apparatus of Claim 22, wherein said diverter comprises an optical interface formed by a refractive index difference.

24. The lighting apparatus of Claim 23, wherein said optical interface is formed by an opening in the planar waveguide.

25. The lighting apparatus of Claim 23, wherein said opening is spaced from the periphery of the planar waveguide.

26. The lighting apparatus of Claim 24, wherein said opening comprises a notch in the peripheral edge of the planar waveguide.

AMENDED SHEET

27. The lighting apparatus of Claim 26, wherein said light source is mounted within the notch in the peripheral edge.

28. The lighting apparatus of Claim 23, wherein the optical interface redirects said light rays through refraction of said light rays.

29. The lighting apparatus of Claim 23, wherein the optical interface redirects said light rays through reflection of said light rays.

30. The lighting apparatus of Claim 22, wherein the light source comprises a light emitting diode which provides multifaceted emission substantially radially outward from said diode into said planar waveguide.

31. A lighting apparatus comprising:

a top surface;

a bottom surface in spaced relationship to said top surface and cooperating with said top surface to form a waveguide having a thickness defined by the distance between the top and bottom surfaces;

at least one light source mounted to input light into said waveguide between said surfaces, wherein one of said surfaces has a curvature relative to the other surface which yields a substantial variation in the thickness of the waveguide in a central region of said waveguide, said variation following a geometric contour selected to alter the angle of incidence of a plurality of light rays propagating between said surfaces of said waveguide.

32. The lighting apparatus of Claim 31, wherein said variation in the thickness is equal to at least five percent of the thickness of said waveguide outside said central region.

33. The lighting apparatus of Claim 31, wherein said surfaces are formed by a generally planar slab of material that is transparent to light at the wavelength produced by said light source.

34. The lighting apparatus of Claim 33, wherein said geometric contour provides a smooth and continuous surface that forms a depression in said slab of material.

35. The lighting apparatus of Claim 34, additionally comprising a reflective material proximate to said bottom surface, said depression being in said top surface, said top surface forming a refractive index interface such that light in the waveguide is reflected from the top surface by the depression towards said bottom surface, said reflective coating reflecting said reflected light from the bottom surface through the top surface and out of said waveguide.

36. The lighting apparatus of Claim 34, wherein said waveguide has a periphery and wherein said depression has an area of at least 70% of the area of said top surface.

37. The lighting apparatus of Claim 35, wherein said geometric contour is generally elliptical in a plane parallel to said one of said surfaces.

38. The lighting apparatus of Claim 35, wherein said light source comprises a solid state point source of light, and wherein said apparatus additionally comprises a second solid state point source of light mounted proximate to the periphery of the waveguide, and peripherally spaced from said point source of light.

AMENDED SHEET

39. The lighting apparatus of Claim 31, wherein said geometric contour causes said light to be redirected by reflection.

40. The lighting apparatus of Claim 31, wherein said one of said surfaces forms a refractive index interface that causes the light propagating between the surfaces to be redirected by total internal reflection.

41. The apparatus of Claim 31, additionally comprising a brightness enhancing film proximate to said top surface.

42. The lighting apparatus of Claim 41, additionally comprising a second brightness enhancing film proximate to said top surface and positioned orthogonally with respect to the brightness enhancing film.

43. The lighting apparatus of Claim 41, additionally comprising a diffuser between the brightness enhancing film and the top surface.

44. A lighting apparatus, comprising

a waveguide having top and bottom surfaces and a peripheral edge, said waveguide having a thickness defined by the distance between the top and bottom surfaces, said thickness at said peripheral edge being substantially different than said thickness in a region intermediate opposing sides of said peripheral edge, said thickness having a geometry selected to enhance ejection of light from said top surface intermediate said opposing sides; and

at least one light source disposed proximate to said peripheral edge to introduce light into said waveguide between said top and bottom surfaces.

45. The lighting apparatus of Claim 44, wherein said light source comprises a point source.

46. The lighting apparatus of Claim 44, wherein said substantially different thickness results in a central depression in said waveguide.

47. The lighting apparatus of Claim 46, wherein the lighting apparatus comprises a plurality of said light sources, and wherein said central depression is generally equidistant from said plurality of light sources.

48. The lighting apparatus of Claim 44, wherein said intermediate region having said geometry comprises an area which is at least 70% of the area of the waveguide.

49. A lighting apparatus, comprising

a waveguide of solid material, said waveguide having a top surface, a bottom surface and a side surface;

a light source mounted to input light into said waveguide;

reflective material juxtaposed with one of said top and bottom surfaces;

wherein at least a portion of one of said top and bottom surfaces has a pattern of elongate structures that generally increase in density with distance from said light source.

50. The lighting apparatus of Claim 49, wherein said elongate structures are formed by scratching one of said top and bottom surfaces with abrasive, said pattern being generally amorphous locally, while being substantially directional and nonrandom globally.

AMENDED SHEET

51. The lighting apparatus of Claim 49, wherein the light source is embedded in said waveguide at a location interim to the periphery of the waveguide.

52. The lighting apparatus of Claim 49, wherein said waveguide has a length and a width, said elongate structures being directed along the length of the waveguide.

53. An illumination device, comprising:

a waveguide having an illumination coupler embedded in an interior region of said waveguide, and having generally parallel top and bottom surfaces outside said interior region such that light is guided therebetween, said illumination coupler comprising a refractive index interface configured to capture light rays propagating along a line that forms less than the critical angle of total internal reflection with respect to at least one of said top and bottom surfaces, such that said captured light rays are injected between said top and bottom surfaces for propagation outside said interior region.

54. The device of Claim 53, wherein said illumination coupler comprises a total internal reflection (TIR) surface configured for total internal reflection of light incident thereon.

55. The device of Claim 54, comprising a point source of light disposed at least partially within a cavity in said waveguide, said cavity being adjacent to said total internal reflecting surface.

56. The device of Claim 55, comprising diffusive reflective material on one of said top and bottom surfaces.

57. The device of Claim 53, wherein the waveguide and illumination coupler are integrally formed from a single piece of material.

58. The device of Claim 55, wherein the point source comprises an LED and wherein one of said top and bottom surface curves toward the LED from the TIR surface, the TIR surface defining a cusp directed toward the LED, the LED in alignment with the cusp to direct substantially all light from the LED directly toward and adjacent the cusp.

59. The device of claim 58, wherein said LED has a light-emitting surface located within a boundary defined by the top and bottom surfaces of said waveguide.

60. The device of Claim 59, wherein said surface of said LED is optically coupled to said waveguide with an optical coupling agent.

61. The device as defined in claims 54 to 60, additionally comprising display elements formed on said waveguide outside the interior region to cause light to be emitted from said waveguide.

62. The device of Claim 61, wherein said display elements are formed as concave channels within the surface of the waveguide, and external surfaces of said channels are either smooth or rough to promote diffuse output radiation.

63. The device of Claim 62, wherein said concave channels of said display elements have depths across said waveguiding layer that compensate for differences in said illumination.

64. The device of Claim 61, wherein said display elements are concentric circular grooves in a surface of the waveguide.

AMENDED SHEET

65. A lighting apparatus, comprising:

a device that emits light;

an optical cavity formed by diffusive reflective surfaces, said cavity having an output region through which light from said cavity passes;

said light emitting device being mounted to supply light to said cavity while being hidden from direct view through said output region, said cavity having a diffusely reflective surface area and said output region having an area, the ratio of said area of said output region to the sum of (i) said area of said output region and (ii) said surface area of said cavity being at least 0.05, said cavity having a depth and said output region having an edge to edge bisector dimension, the ratio of said depth to said bisector dimension being significantly less than 0.1; and

an angular spectrum restrictor positioned to restrict output illumination through said output region to a predetermined range of angles.

66. The apparatus of Claim 65, wherein the angular spectrum restrictor comprises:

a diffuser at said output region, said diffuser positioned to diffuse illumination which passes from said cavity through said output region; and

a brightness enhancing material disposed adjacent said diffuser, said material concentrating illumination within a viewing angle so as to enhance the brightness of the display panel.

67. The apparatus of Claim 65, wherein said light emitting device comprises a fluorescent tube, and said cavity comprises a waveguide.

68. The apparatus of Claim 65, wherein said ratio of said depth to said edge-to-edge dimension is no more than 0.03.

69. The apparatus of Claim 65, wherein said ratio of said depth to said edge-to-edge dimension is less than 0.08.

70. The apparatus of Claim 65, wherein said fluorescent tube is disposed between an edge of said waveguide and diffusive reflective material.

71. The apparatus of Claim 65, wherein the reflective surfaces of said cavity have a reflectance higher than 90 percent.

72. The apparatus of Claim 65, wherein said spectrum restrictor is planer and comprises micro-replicated optical structures.

73. The apparatus of Claim 65, wherein said predetermined angle provides a viewing angle of no more than about 35 degrees.

74. The apparatus of Claim 65, wherein said diffuser is between said brightness enhancing film and said optical cavity.

75. The apparatus of Claim 65, wherein all of the edge-to-edge bisector dimensions of said output region exceed 4 inches in length.

76. The apparatus of Claim 65, wherein the apparatus is sized and configured to illuminate a room.

AMENDED SHEET

77. A method of lighting, comprising:

producing illumination from an optical cavity formed by diffusely reflecting surfaces and outputting illumination from the cavity through an output illumination region, said producing of said illumination comprising directing light rays from a source of illumination into the cavity such that the source of the illumination is not visible through the output illumination region;

restricting the angular spectrum of illumination from the output illumination region to a predetermined range of angles; and

mounting the optical cavity to illuminate at least a portion of a room.

78. The method of Claim 77, wherein said restricting comprises:

using a diffuser to diffuse illumination passing from the cavity through the output illumination region;

using a brightness enhancing film to concentrate the diffused light into a predetermined angular range; and

directing the concentrated, diffused light through said output region.

79. The method of Claim 77, wherein the source comprises one or more florescent tubes mounted adjacent a periphery of the cavity.

80. The method of Claim 77, wherein said mounting comprises directing the light from a ceiling of a room towards a floor of the room.

81. A method of manufacturing a lighting apparatus comprising:

wrapping a flexible sheet of reflective material around one side of a tubular light source;

juxtaposing a member forming an optical cavity with another side of said tubular light source so that light from said source is introduced into the optical cavity;

attaching said flexible sheet to said member such that said sheet retains said tubular source in juxtaposition with said member.

82. A method of Claim 81, wherein said reflective material is highly diffusely reflective.

83. The method of Claim 81, wherein said tubular source comprises a fluorescent tube.

84. The method of Claim 81, wherein the optical cavity comprises a waveguide.

85. The method of Claim 84, additionally comprising positioning the tubular source in a channel formed in a side of the waveguide.

86. The method of Claim 85, additionally comprising placing an optical coupling material between the waveguide and the tubular light source to enhance coupling of light from said source into said waveguide.

AMENDED SHEET

Fig. 1

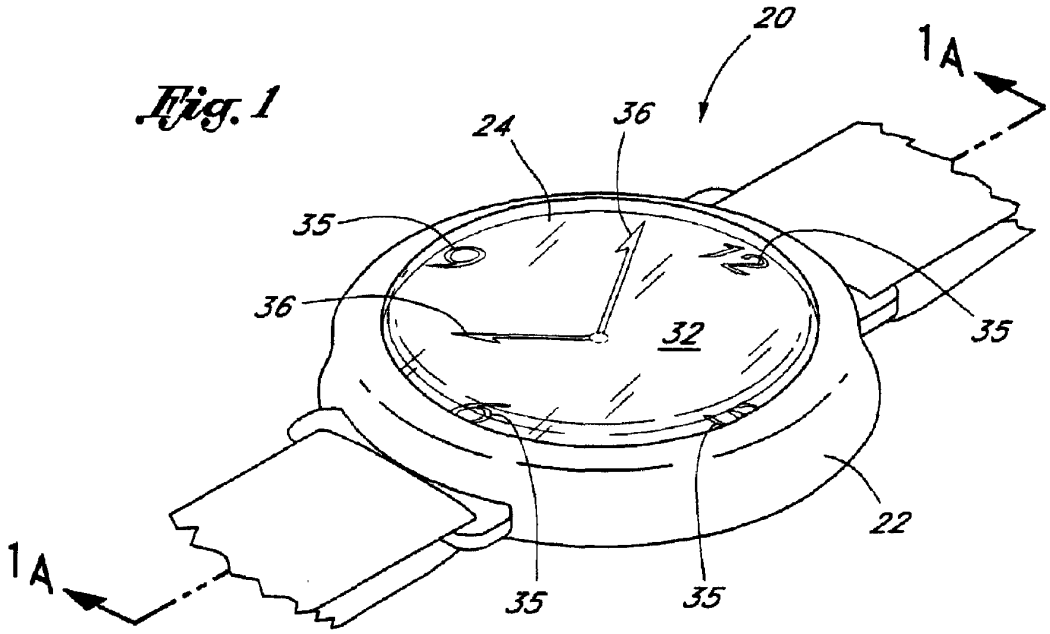
20
1A
24
36
35
36
32
35
22
1A
35
35

Fig. 1A

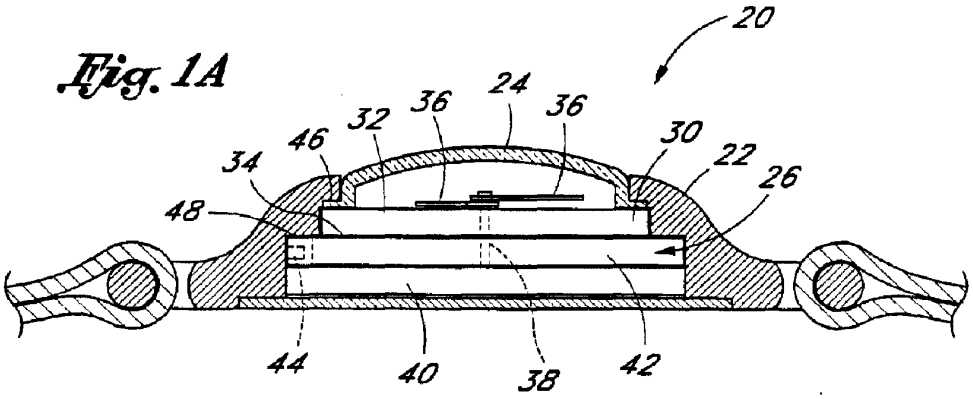
20
24
36
32
36
46
30
34
22
26
48
44
40
38
42

Fig. 2

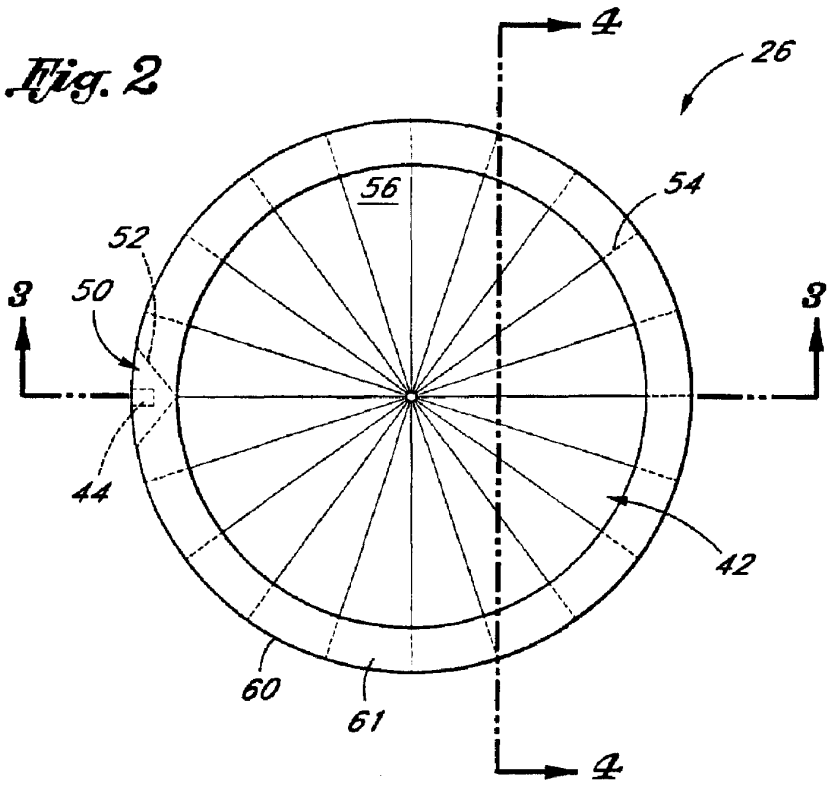

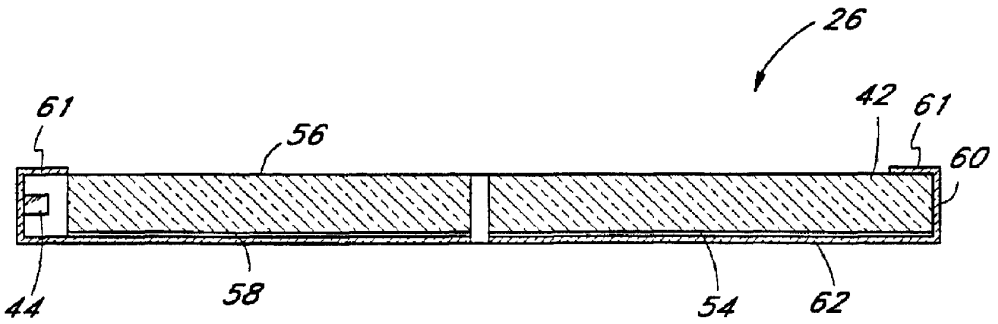

Fig. 3

Fig. 4

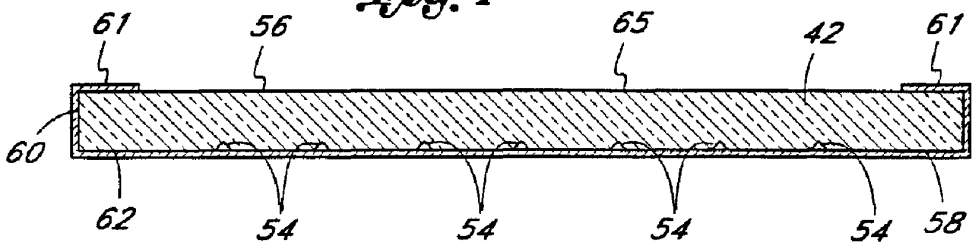

Fig. 4A

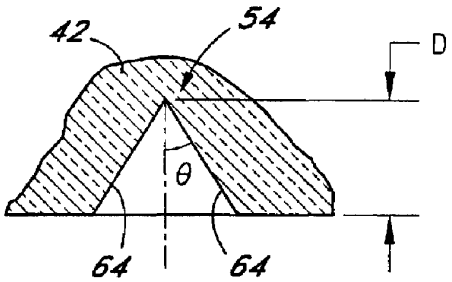

Fig. 4B

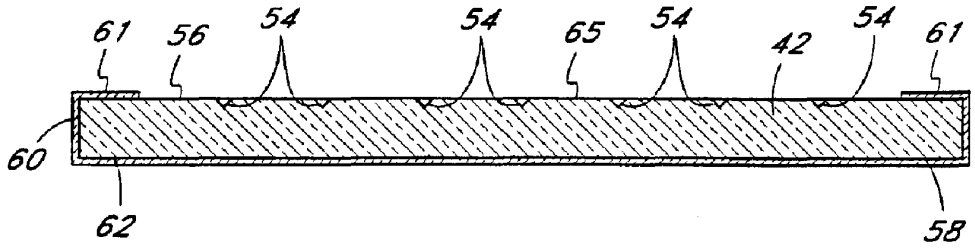

Fig. 4C

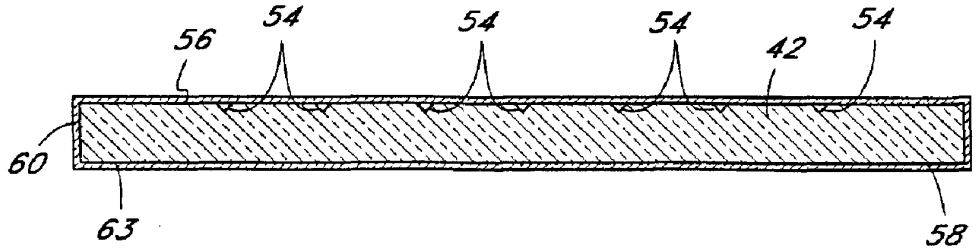

Fig. 5

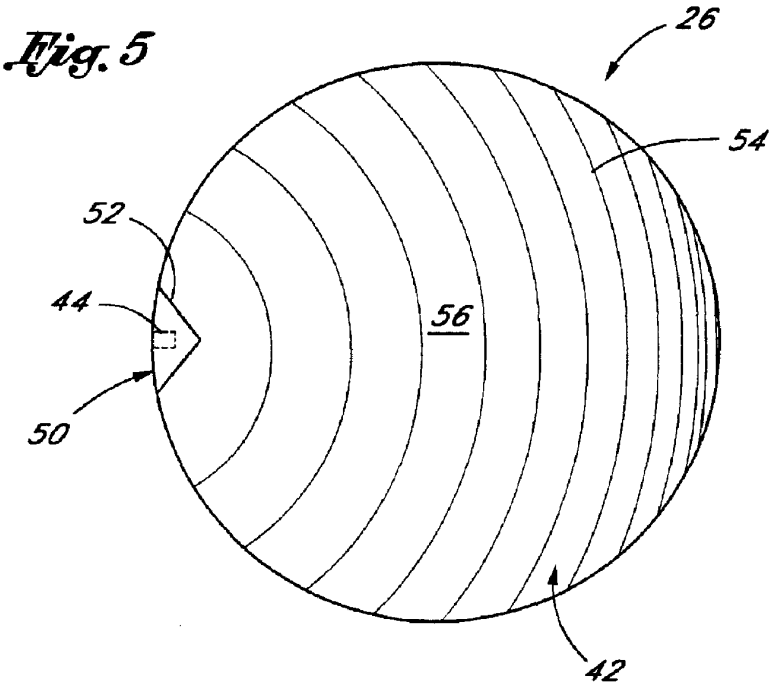

Fig. 6

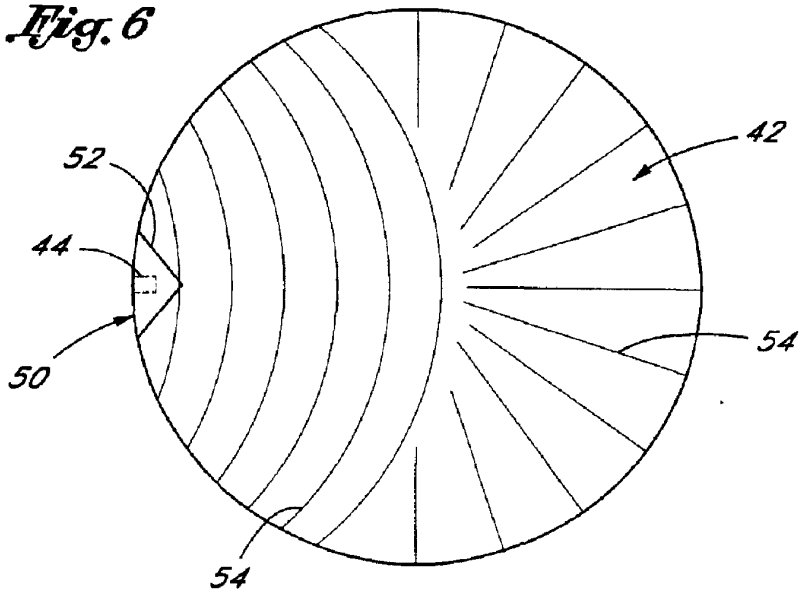

Fig. 7

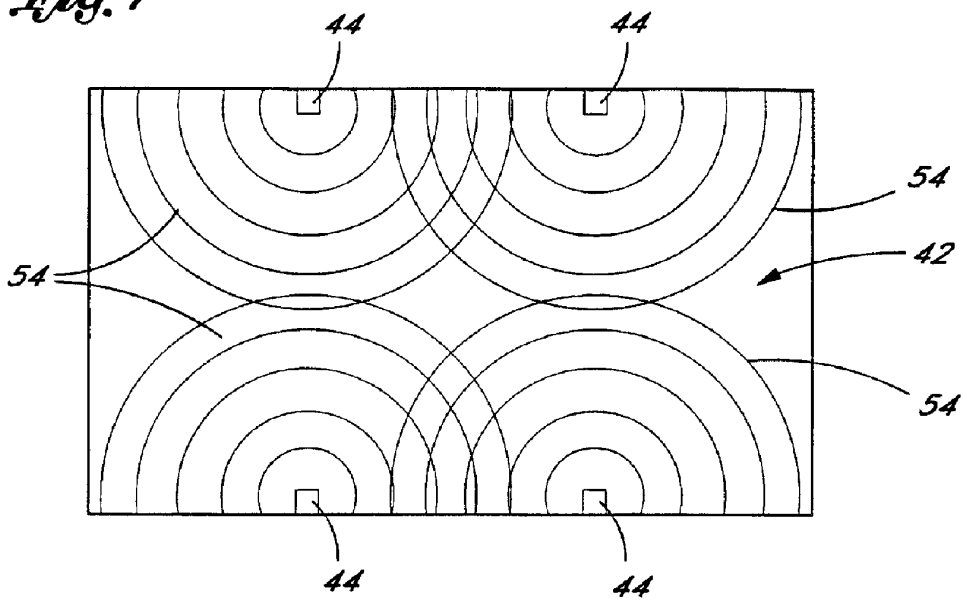

Fig. 8

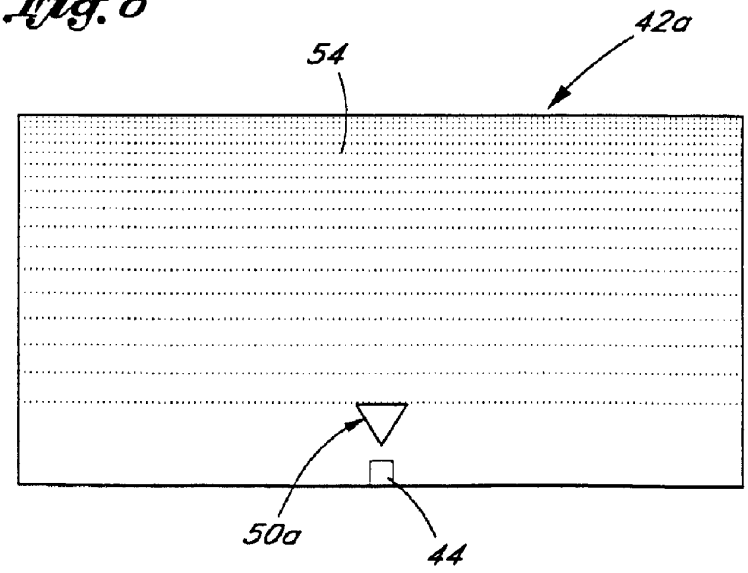

Fig. 9

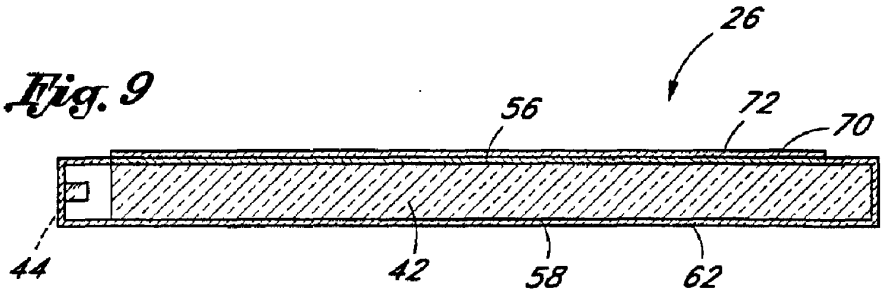

Fig. 10

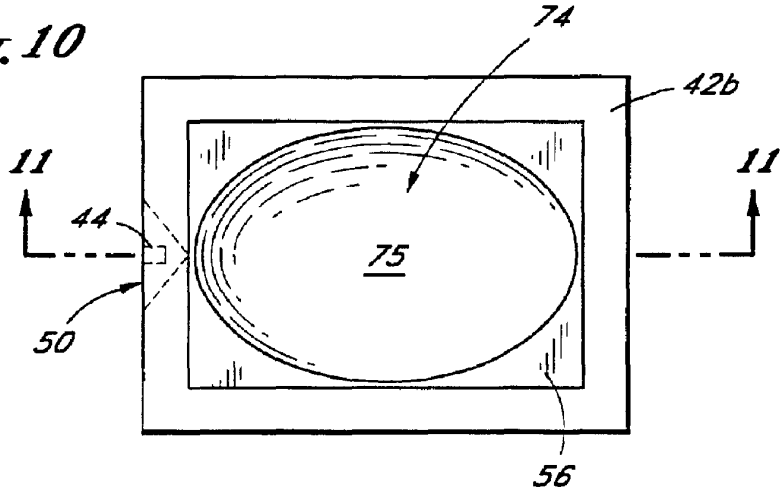

Fig. 11

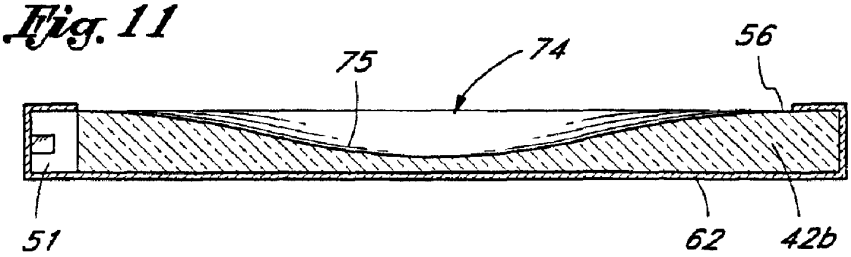

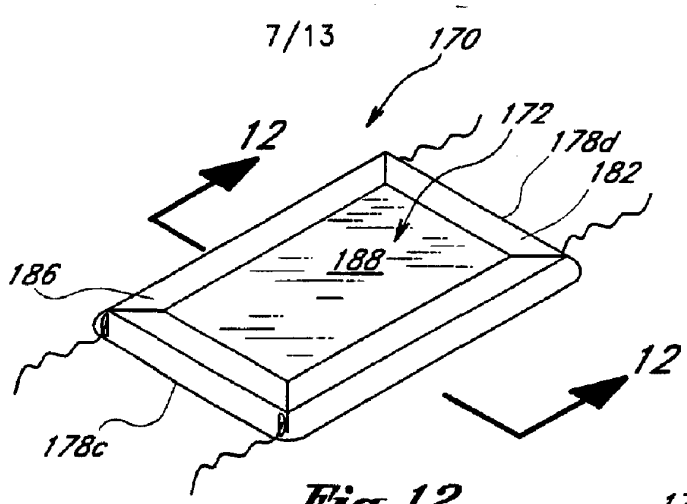

Fig. 12

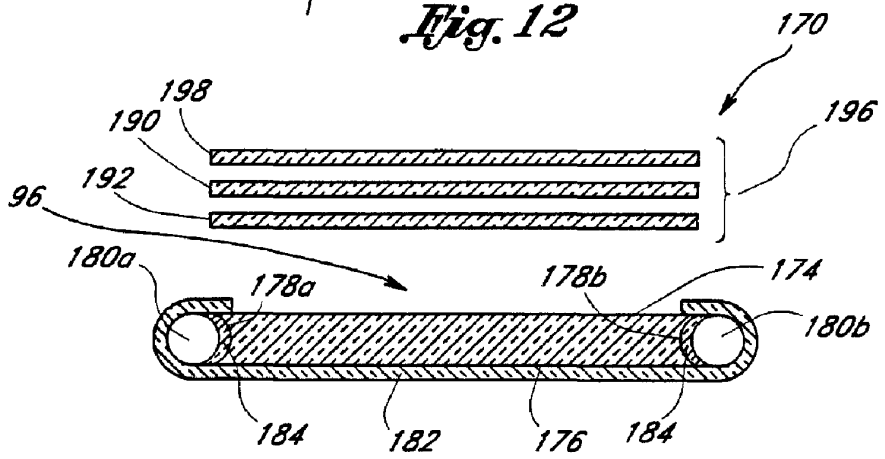

Fig. 13

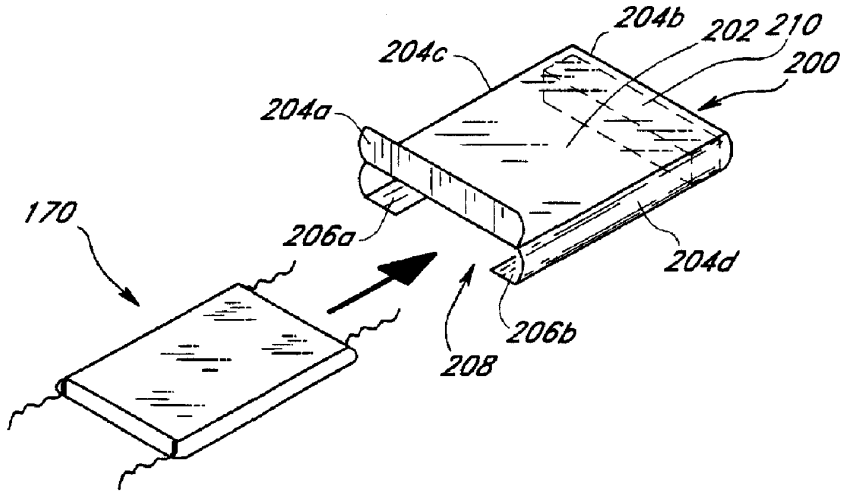

Fig. 14

Fig. 15

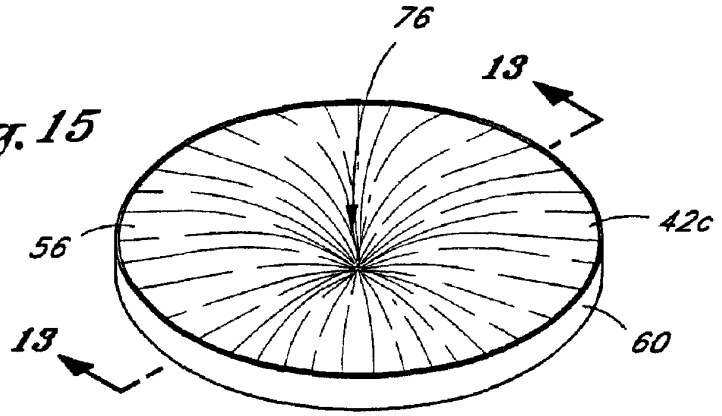

Fig. 16

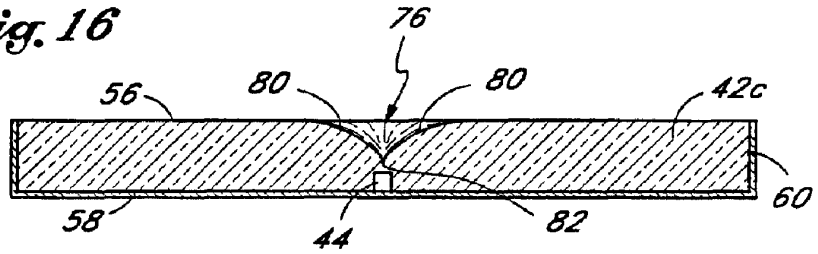

Fig. 16A

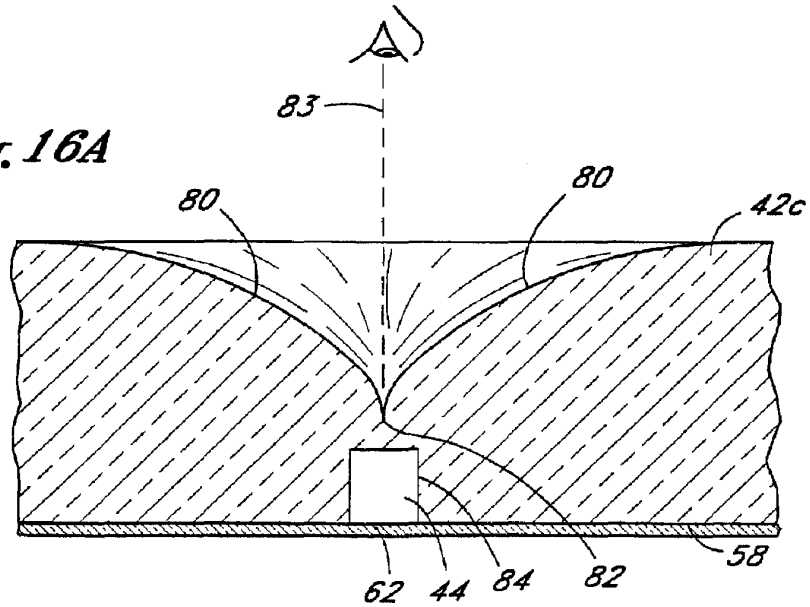

Fig. 17

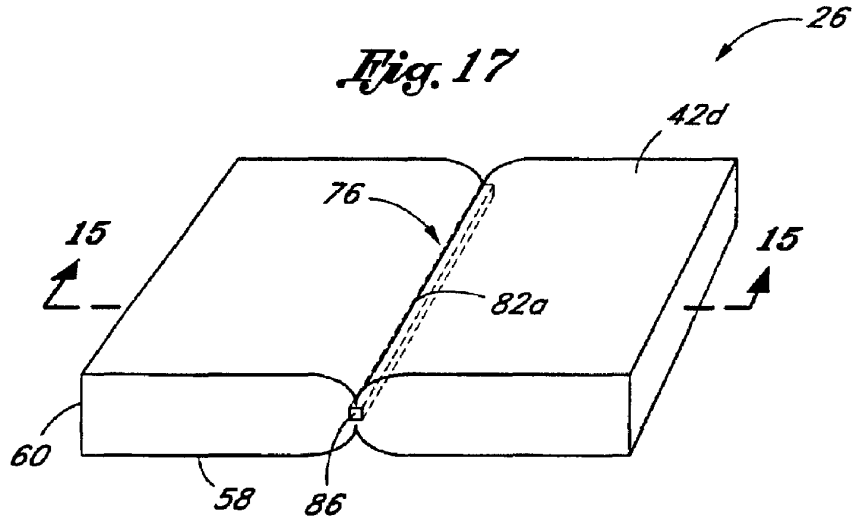

Fig. 18

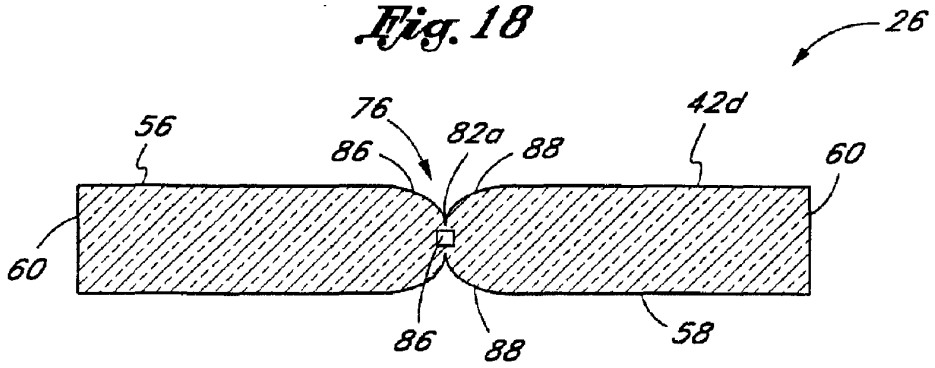

Fig. 19
(PRIOR ART)

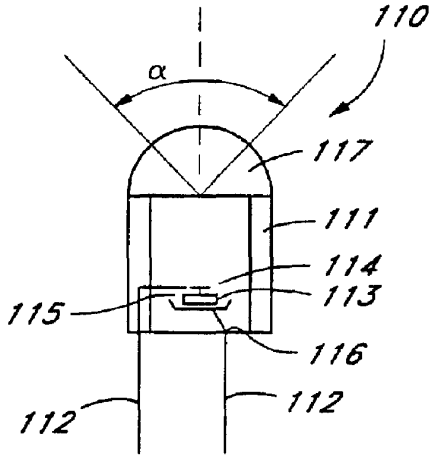

Fig. 20
(PRIOR ART)

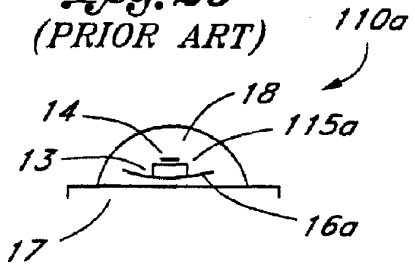

Fig. 21

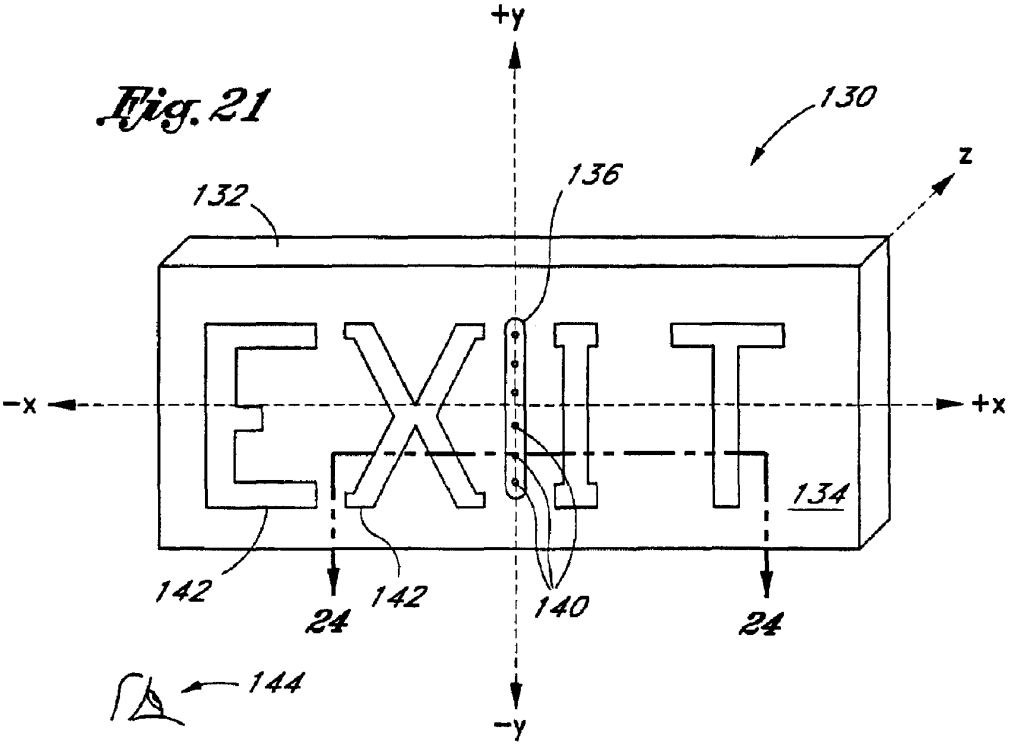

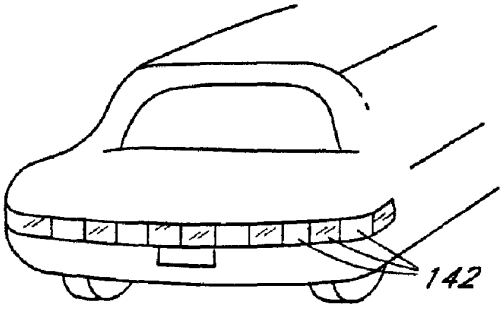

Fig. 22

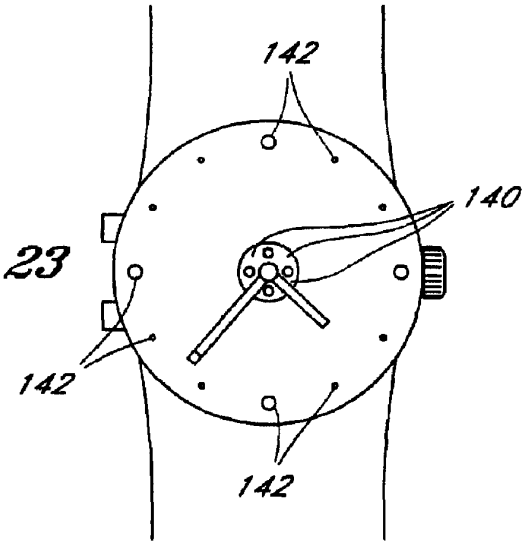

Fig. 23

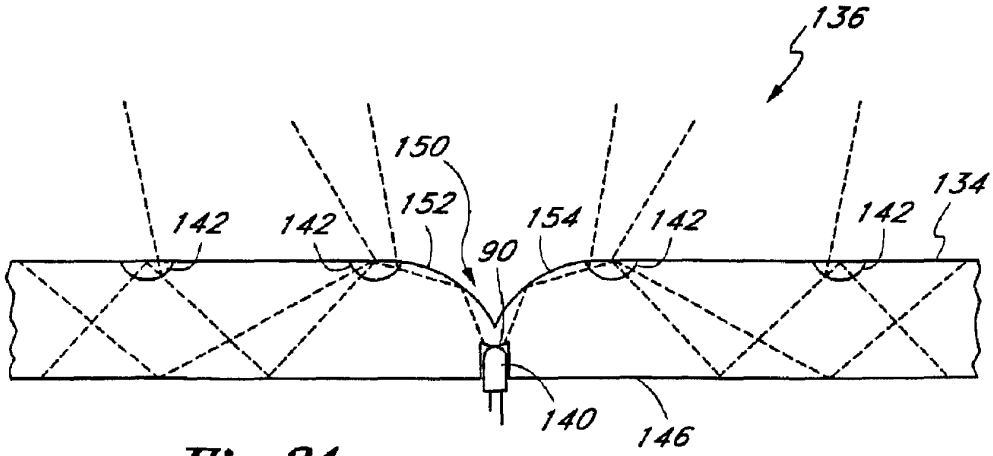

Fig. 24

Fig. 25

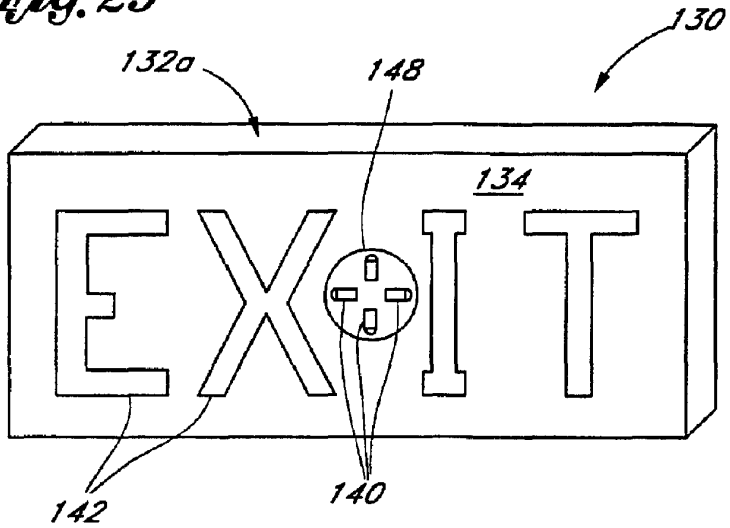

Fig. 27

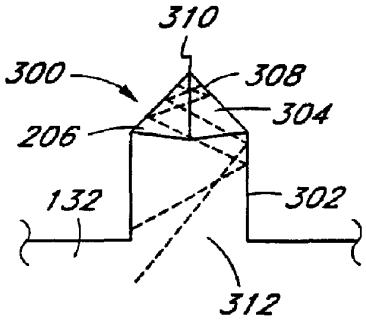

Fig. 28

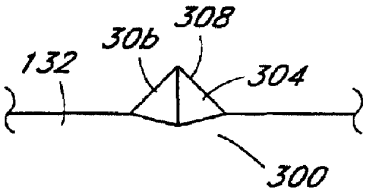

Fig. 26

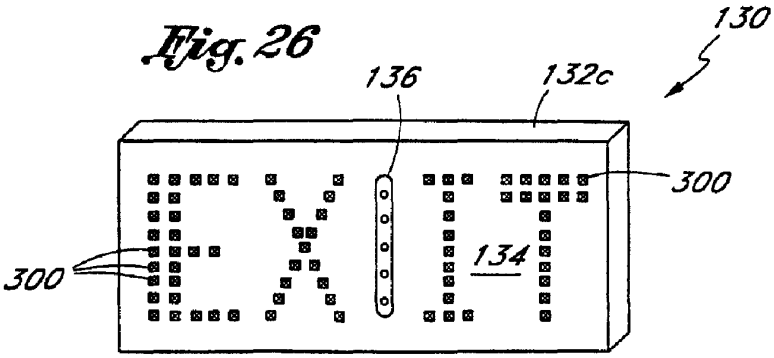

Fig. 29

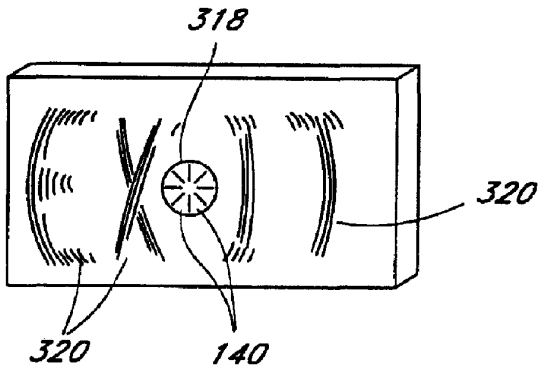

Fig. 30

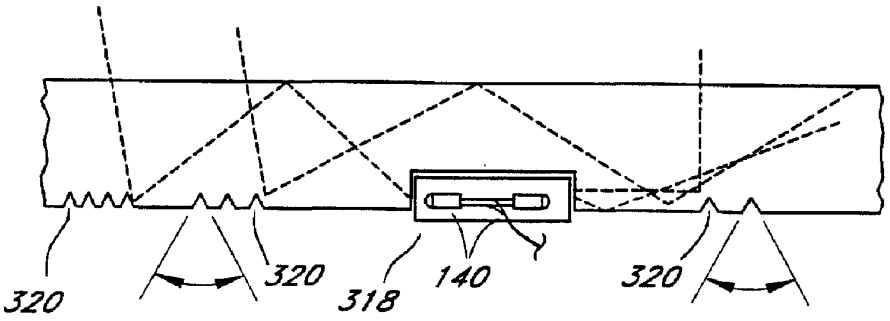

(19) Canadian Intellectual Property Office

An Agency of Industry Canada

Office de la Propri,t, Intellectuelle du Canada

Un organisme d'Industrie Canada

(11) CA 2 402 037 (13) A1

(40) 01.02.2001
(43) 01.02.2001

(12)

(21) 2 402 037

(22) 29.06.2000

(51) Int. Cl.7: F21S 2/00, F21V 23/06, F21V 21/088

(85) 04.09.2002

(86) PCT/US00/18002

(87) WO01/007828

(30) 60/144,920 US 21.07.1999

(71)
TELEDYNE LIGHTING AND DISPLAY PRODUCTS, INC.,
12525 Daphne Avenue
2nd Floor, HAWTHORNE, XX (US).

(72)
PELKA, ERIC D. (US).
PARKYN, WILLIAM A. (US).
POPOVICH, MICHAEL J. (US).
PELKA, DAVID G. (US).

(74)
SMART & BIGGAR

(54) APPAREIL D'ECLAIRAGE
(54) LIGHTING APPARATUS

Office de la Propriété Intellectuelle du Canada
Un organisme d'Industrie Canada

Canadian Intellectual Property Office
An agency of Industry Canada

CA 2402037 A1 2001/02/01

(21) 2 402 037

(12) DEMANDE DE BREVET CANADIEN
CANADIAN PATENT APPLICATION

(13) A1

(86) Date de dépôt PCT/PCT Filing Date: 2000/06/29
(87) Date publication PCT/PCT Publication Date: 2001/02/01
(85) Entrée phase nationale/National Entry: 2002/09/04
(86) N° demande PCT/PCT Application No.: US 2000/018002
(87) N° publication PCT/PCT Publication No.: 2001/007828
(30) Priorité/Priority: 1999/07/21 (60/144,920) US

(51) Cl.Int.[7]/Int.Cl.[7] F21S 2/00, F21V 21/088, F21V 23/06

(71) Demandeur/Applicant:
TELEDYNE LIGHTING AND DISPLAY PRODUCTS, INC., US

(72) Inventeurs/Inventors:
PELKA, DAVID G., US;
PARKYN, WILLIAM A., US;
POPOVICH, MICHAEL J., US;
PELKA, ERIC D., US

(74) Agent: SMART & BIGGAR

(54) Titre : APPAREIL D'ECLAIRAGE
(54) Title: LIGHTING APPARATUS

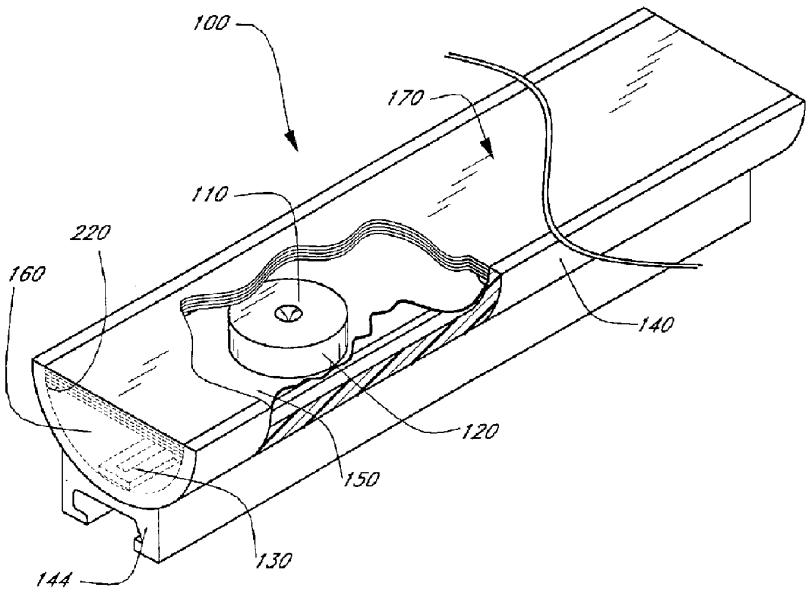

(57) Abrégé/Abstract:
An illumination apparatus (100) provides an output with high spatial uniformity of luminance. The illumination apparatus includes a cavity that has reflective surfaces (150, 160) and an output area. At least one light source is disposed in the cavity, with the light source including a point source (such as an LED (174)) and an optical diverter (110) having a flared (e.g., cuspated) reflecting surface. Light from the point source is distributed by the optical diverter towards the reflective surfaces within the cavity. Before exiting the device, light passes through an optical conditioning element that is positioned over the output area of the cavity. The optical conditioning element includes at least a diffuser (180), such as a translucent film or plastic sheet (190, 194), and preferably also includes one or more prism sheets such as a brightness-enhancing film.

(12) INTERNATIONAL APPLICATION PUBLISHED UNDER THE PATENT COOPERATION TREATY (PCT)

(19) World Intellectual Property Organization
International Bureau

(43) International Publication Date
1 February 2001 (01.02.2001)

PCT

(10) International Publication Number
WO 01/07828 A1

(51) International Patent Classification[7]: F21S 2/00, F21V 23/06, 21/088 // F21Y 101:02

(21) International Application Number: PCT/US00/18002

(22) International Filing Date: 29 June 2000 (29.06.2000)

(25) Filing Language: English

(26) Publication Language: English

(30) Priority Data:
60/144,920 21 July 1999 (21.07.1999) US

(71) Applicant: TELEDYNE LIGHTING AND DISPLAY PRODUCTS, INC. [US/US]; 12525 Daphne Avenue, 2nd Floor, Hawthorne, CA 90250 (US).

(72) Inventors: PELKA, David, G.; 8315 Kenyon Avenue, Los Angeles, CA 90045 (US). PARKYN, William, A.; 25037 Neko Drive, Lomita, CA 90717 (US). POPOVICH, Michael, J.; 1237 Cuchara Drive, Del Mar, CA 92014 (US). PELKA, Eric, D.; 8315 Kenyon Avenue, Los Angeles, CA 90045 (US).

(74) Agent: NATAUPSKY, Steven, J.; Knobbe, Martens, Olson and Bear, LLP, 620 Newport Center Drive, 16th Floor, Newport Beach, CA 92660 (US).

(81) Designated States *(national)*: AE, AG, AL, AM, AT, AU, AZ, BA, BB, BG, BR, BY, BZ, CA, CH, CN, CR, CU, CZ, CZ (utility model), DE, DE (utility model), DK, DK (utility model), DM, DZ, EE, EE (utility model), ES, FI, FI (utility model), GB, GD, GE, GH, GM, HR, HU, ID, IL, IN, IS, JP, KE, KG, KP, KR, KZ, LC, LK, LR, LS, LT, LU, LV, MA, MD, MG, MK, MN, MW, MX, MZ, NO, NZ, PL, PT, RO, RU, SD, SE, SG, SI, SK, SK (utility model), SL, TJ, TM, TR, TT, TZ, UA, UG, UZ, VN, YU, ZA, ZW.

(84) Designated States *(regional)*: ARIPO patent (GH, GM, KE, LS, MW, MZ, SD, SL, SZ, TZ, UG, ZW), Eurasian patent (AM, AZ, BY, KG, KZ, MD, RU, TJ, TM), European patent (AT, BE, CH, CY, DE, DK, ES, FI, FR, GB, GR, IE, IT, LU, MC, NL, PT, SE), OAPI patent (BF, BJ, CF, CG, CI, CM, GA, GN, GW, ML, MR, NE, SN, TD, TG).

Published:
— *With international search report.*

[Continued on next page]

(54) Title: LIGHTING APPARATUS

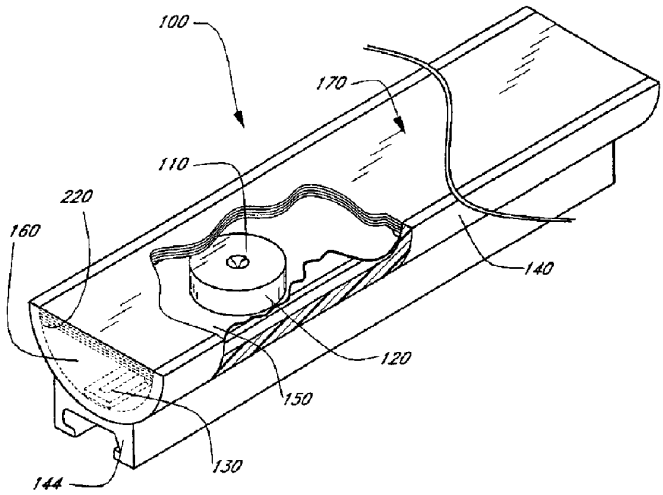

(57) Abstract: An illumination apparatus (100) provides an output with high spatial uniformity of luminance. The illumination apparatus includes a cavity that has reflective surfaces (150, 160) and an output area. At least one light source is disposed in the cavity, with the light source including a point source (such as an LED (174)) and an optical diverter (110) having a flared (e.g., cuspated) reflecting surface. Light from the point source is distributed by the optical diverter towards the reflective surfaces within the cavity. Before exiting the device, light passes through an optical conditioning element that is positioned over the output area of the cavity. The optical conditioning element includes at least a diffuser (180), such as a translucent film or plastic sheet (190, 194), and preferably also includes one or more prism sheets such as a brightness-enhancing film.

WO 01/07828 A1

For two-letter codes and other abbreviations, refer to the "Guidance Notes on Codes and Abbreviations" appearing at the beginning of each regular issue of the PCT Gazette.

LIGHTING APPARATUS

Field of the Invention

The present invention relates generally to the field of lighting devices, and more specifically to devices capable of a low profile which utilize point sources, such as light emitting diodes, for illumination.

Description of the Related Art

Low profile lighting devices are useful in a variety of applications, such as decorative strip lighting or display panel illumination. One common form of strip lighting utilizes neon tubes. Neon tubes have the advantages of being lightweight and lending themselves to decorative lighting. Further, the light output from neon tubes is relatively diffuse and uniform in appearance. However, neon tubes are fragile, require high voltage, and generate significant radio-frequency (RF) interference, which must often be shielded at significant cost. Fluorescent lighting is likewise diffuse, but is generally limited to short lengths and typically includes unattractive electrical connections.

Display panel illumination is often accomplished by placing light sources behind the panel to illuminate it. A diffuser box containing a light source can generate output that is fairly uniform, so long as the light sources are sufficiently far away from the display panel. This makes such devices bulky, however. If the light sources are too close to the panel, the illumination will no longer be uniform, and the sources will be seen as "hot spots." Thus there is a need for a compact lighting device that provides uniform output intensity.

Summary of the Invention

According to one aspect of the invention, an illumination apparatus includes a cavity having reflective surfaces and an output area, as well as at least one light source disposed in the cavity, wherein the light source includes a point source and an optical diverter having a flared reflecting surface. The apparatus further includes an optical conditioning element over the output area, with the optical conditioning element including at least a diffuser, for example, a translucent film or plastic sheet. In a preferred embodiment, the flared surface is curved, and may be cuspated. In one preferred embodiment, the point source comprises an LED. In a preferred embodiment, the cavity reflecting surfaces are diffusively reflective.

According to another aspect of the invention, an illumination apparatus comprises a housing that includes a cavity having reflective surfaces and an output aperture. The apparatus also includes an optical conditioning element across the output aperture, in which the conditioning element comprises at least one sheet having a plurality of pixels. The apparatus further includes at least one light source disposed within the cavity directly beneath the conditioning element, in which the (at least one) light source includes a point source spaced less than 3-1/2 inches from the sheet that illuminates the reflective surfaces such that the ratio of the luminance of adjacent pixels is between 0.95 and 1.05 and such that the ratio of the luminance of non-adjacent pixels is between 0.5 and 2.0, whereby the appearance of illumination at the sheet is substantially uniform. In a preferred embodiment, the optical conditioning element

includes a diffuser sheet disposed below the prism sheet. In one preferred embodiment, the optical conditioning element includes a second prism sheet with orientation 90° from the first. In a preferred embodiment, the (at least one) light source includes a point source and a total internal reflection lens having a cuspated surface for reflecting light from the point source against the diffusive reflective surfaces.

According to another aspect of the invention, an illumination apparatus includes a cavity formed by reflective material, in which the cavity has an output area. An optical conditioning element is at the output area. The apparatus further includes a light source in the cavity, in which the light source includes a point source and an optical diverter having a reflecting surface which is partially reflective and partially transmissive. The reflective surface of the diverter allows a portion of light incident thereon to pass through the reflecting surface, while reflecting another portion of the incident light onto the reflective material of the cavity. The reflective material reflects light within the cavity, whereby the output area and the optical conditioning element are illuminated. In a preferred embodiment, the reflecting surface of the diverter is comprised of scattering centers which scatter light incident thereon.

According to yet another aspect of the invention, an illumination apparatus includes an optical diverter. The diverter includes transparent material having a reflecting surface formed by a refractive index interface configured to totally internally reflect light from a point source positioned to emit a first portion of light rays towards the reflecting surface and a second portion of light rays towards a side surface of the diverter. The diverter includes a refracting interface that refracts the second portion of light rays towards the reflecting surface, such that both the first and second portions of light rays are reflected from the reflecting surface.

According to yet another aspect of the invention, there is provided an optical diverter that includes transparent material having a flared reflecting surface formed by a refractive index interface. The interface is configured to totally internally reflect light from a point source which is positioned adjacent to an apex of the flared reflecting surface and which emits light rays for reflection by the reflecting surface.

According to a further aspect of the invention, an illumination apparatus includes a cavity having reflective surfaces and an output area. The apparatus further includes at least one light source disposed in the cavity, in which the light source includes a point source and an optical diverter having a surface that is partially reflective and partially transmissive. The apparatus also includes an optical conditioning element over the output area, in which the optical conditioning element includes a diffuser, wherein the diverter is positioned between the point source and optical conditioning element such that (a) a portion of light emitted by the point source is reflected from the diverter towards the reflective surfaces of the cavity, and (b) another portion of light emitted by the point source is transmitted through the surface of the diverter towards the optical conditioning element, with the diverter sized to allow at least a substantial portion of the reflected light to reach the optical conditioning element without passing through the diverter, and wherein the diverter and the reflective surfaces of the cavity are arranged to allow at least a substantial portion of the transmitted light to reach the optical conditioning element without undergoing reflection.

Brief Description of the Drawings

FIGURE 1 shows a first embodiment of a low profile lighting device with the housing partially cut away to reveal one of the point light sources and optical diverters therein.

FIGURE 2 is an exploded view of the embodiment illustrated in FIGURE 1.

FIGURE 3 shows another embodiment of a low profile lighting device.

FIGURE 4 is an exploded view of the embodiment illustrated in FIGURE 3.

FIGURES 5A and 5B are end and plan views, respectively, of a mounting channel having a slot for mounting the embodiment of FIGURES 1-2 or FIGURES 3-4 to the mounting bracket of FIGURES 6A and 6B.

FIGURES 6A and 6B are elevation and plan views, respectively, of a mounting bracket which is secured to a mechanical structure such as a building, and which receives the mounting channel of FIGURES 5A and 5B to mount the low profile lighting device on the building.

FIGURES 7A and 7B show a collar for mechanically and electrically coupling two lighting devices.

FIGURE 7C shows an electrical arrangement for coupling power to an end of a lighting device.

FIGURE 8 shows an optical diverter which utilizes total internal reflection for laterally diverting light from a light emitting diode or other point source.

FIGURES 9, 10, and 11 show the progression of light rays through the optical diverter of FIGURE 8.

FIGURE 12 shows an optical diverter which produces highly collimated "equatorial" output beam.

FIGURE 13 shows the progression of light rays through an optical diverter having scattering centers on its top surface for diffusely transmitting some light through the top surface.

FIGURE 14 shows an optical diverter having a roughened surface pattern in the form of a series concentric rings on its top surface for diffusely transmitting some light through the top surface.

FIGURE 15 shows an embodiment of a lighting device in the form of an alphanumeric character.

Detailed Description of the Preferred Embodiments

One preferred embodiment of a lighting device 100, illustrated in FIGURE 1, comprises plural light sources, each of which includes a point source such as a light emitting diode (LED) 174 shown in FIGURE 8, and an optical diverter 110. Light from the LED 174 is received by the optical diverter 110, which redirects the light laterally and downwardly. The plural LEDs are coupled to each other electrically by a printed circuit board 130 (a wire harness is an alternative configuration). The point sources 174 and optical diverters 110 are mounted within an elongate cavity formed by a sheet 150 of diffusively reflective material in the general form of a half or hemi cylinder. The sheet 150 is mounted in, and extends the length of, a housing 140, which may be an extrusion. The housing 140 is generally elongate and has a width that is not substantially greater than the width of the light output area. The printed circuit board 130 is disposed between the sheet 150 and the bottom of the housing 140. Wires (not shown) pass through the sheet 150 to electrically connect the point sources to the circuit board. A mounting channel 144 may be included on the bottom of the housing 140 for mounting the device 100 to a building. The mounting channel 144 may, for

example, be made of acrylic that is bonded or glued to the housing 140, or the channel 144 may be integrally formed with the housing 140 as part of an extrusion process. The light that exits the diverters 110 is reflected by the diffusely reflecting sheet 150, located between the optical diverters 110 and the circuit board 130, as well as by diffusely reflecting end caps 160 connected to the housing 100 at either end of the device 100. If a plurality of optical diverters 110 are linearly arranged along the longitudinal axis of the cavity, the maximum separation between adjacent optical diverters 110 is preferably about twice the width of the device 100. Further, the optical diverters 110 are preferably separated by at least 0.5 inches.

The surfaces of the diffusely reflecting sheet 150 and the diffusely reflecting end caps 160 are preferably matte white, with diffuse reflectivity over 90%, preferably 96% or more. For this purpose, the sheet 150 and the caps 160 may be coated with diffusely reflective tape, such as DRP™ Backlight Reflector (W.L. Gore & Associates), white paint, or more exotic materials such as Labsphere Corporation's Spectraflect paint. The reflectivity of Spectraflect paint is 98%, which is considerably higher than the reflectivity of house paint, which is approximately 92%. DRP™ Backlight Reflector has a reflectivity of approximately 97%-99.5%. Alternatively, the diffusely reflecting sheet 150 and the diffusely reflecting caps 160 may be constructed from a diffusely (or specularly) reflecting material, such as titanium dioxide, pigmented Lexan™ polycarbonate, or Spectralon™ plastic, thereby avoiding the need to apply a separate coating to the sheet 150 and the end caps 160. The reflectivity of Spectralon™ plastic is about 99%. Although it is preferred that the reflective surfaces 150, 160 be diffusively reflective, in an alternative embodiment these surfaces comprise specularly reflecting surfaces that are preferably faceted as in a product sold by 3M under the name Visible Mirror Film (specular or diffuse). Additionally, while the cavity of the preferred embodiment is gas-filled (with air), the cavity may also be formed by a liquid or solid.

Light exits the device 100 through a sheet member or film stack 170, which faces the diffusely reflecting sheet 150. As shown in FIGURE 2, the sheet member 170 acts as the output face of the device 100, and comprises an optical conditioning element 210, which may be covered with transmissive outer protective cover 200. The optical conditioning element 210 includes (in the direction of light propagating outward through the sheet member 170) one or more sheets of material, which are substantially parallel to each other, namely, a diffuser 180, an optional first prism sheet 190, and an optional second prism sheet 194. The diffuser 180 acts to randomize the direction of the light incident upon it and preferably has relatively low backscattering. By way of example, the diffuser 180 may be of any construction that will diffuse light, such as translucent sheets of plastic, or plastic with a rough surface. The prism sheets 190 and 194 may each be a brightness-enhancing film (BEF) for reducing the solid angle of the light, with an angular emission in the range of 50 to 80 degrees full width half maximum (FWHM). Brightness-enhancing films suitable for use in the preferred embodiments are commercially available from 3M Corporation. A thin film BEF, having linear pyramidal structures therein, is described in U.S. Patent 5,684,354 to Gleckman, which is hereby incorporated by reference herein. Preferably, the repeated structures of the sheets 190 and 194 are crossed at generally 90 degrees with respect to each other, and are each oriented at 45 degrees with respect to the longitudinal axis of the elongate housing 140.

The diffuser 180 and the prism sheets 190 and 194 of the optical conditioning element 210 spread the light uniformly over the output face of the device 100. The prism sheets also serve to concentrate the optical energy within a field of view, and this causes the light to be directed more intensely in the direction of an observer within that field. While it is preferred that the diffuser 180 be placed below the prism sheets 190 and 194 (as shown in FIGURE 2), it will be understood that the position of the diffuser and the prism sheets may be exchanged. The optical conditioning element 210 and the point source 174 are preferably separated by less than 3.5 inches, more preferably by less than 2.5 inches, and still more preferably by less than 1.5 inches. The protective outer cover 200 protects the device 100 from the environment, and may act as a color filter or contain darkened or lightened regions of a specific pattern, such as a logo, design, or alphanumeric characters.

As shown in FIGURE 2, the point sources 174, such as LEDs, are disposed just beneath the optical diverters 110. Electrical leads (not shown) from the point sources 174 are connected to the printed circuit board 130, with the sheet 150 having holes punched therein for accepting the leads of the LEDs 174, such that the sheet is positioned between the LEDs and the printed circuit board. The housing 140 includes lips or flanges 220 for holding the diffusely reflecting sheet 150 in place. The sheet 150 (and the LEDs 174 and the printed circuit board 130 to which the sheet 150 is attached) is advantageously flexible so that it may be slid underneath the lips 220, permitting the sheet 150 to naturally assume a shape which is typically parabolic in cross section. When the sheet 150 assumes a parabolic cross section, light reflected off the sheet is efficiently directed towards the optical conditioner 210.

An alternative preferred embodiment is illustrated in FIGURES 3 and 4. In this embodiment, a device 230 includes a cylindrically shaped housing 240 that functions both as a housing and a protective outer cover. The sheet member 170 is secured to a pair of lips or flanges 244 that run along the length of the device 230. (The flanges 244 may also function the same as the lips 220 of FIGURE 2, for holding the reflecting sheet 150 in place.) The device 230 is otherwise substantially similar to its counterpart 100 of FIGURES 1-2, and similar parts are designated with the same reference numerals. The housing 240 may be colored or include darkened portions for producing a desired visual effect. Alternatively, separate elements or layers of film (not shown) disposed between the conditioning element 170 and the housing 240 may be used for achieving a desired optical effect. Such elements may also be used in conjunction with the embodiment shown in FIGURES 1 and 2.

One aspect of the embodiments shown in FIGURES 1-2 and FIGURES 3-4 is that the intensity of light exiting the optical conditioning element 210 is spatially very uniform and thus appears to an observer to have constant luminance across the entire element 210. This uniformity can be quantified with reference to an imaginary grid of 1 mm^2 "pixels" on the output side of the optical conditioning element 210. As used herein, the term "pixel" means any square millimeter cell defined by an imaginary grid on the output side of the element 210 formed by two orthogonal sets of parallel lines separated by 1 mm. Thus, a pixel as used herein does not represent a discrete element, but rather corresponds to a square millimeter of the exterior surface of element 210. The ratio of the luminance of adjacent pixels is preferably between 0.95 and 1.05, more preferably between 0.98 and 1.02, and still more preferably between 0.99 and 1.01. The ratio of the luminance of non-adjacent pixels is preferably between 0.5 and 2.0, more preferably

between 0.57 and 1.75, still more preferably between 0.67 and 1.5, and most preferably between 0.77 and 1.3. It will be understood that a given ratio can be more or less than 1.0, depending upon whether the ratio is determined with the intensity of the more intense pixel placed in the numerator or the denominator, respectively.

As illustrated in FIGURES 5A and 5B, the mounting channel 144 is configured to mate with a mounting bracket 250, such as that illustrated in FIGURES 6A and 6B. The mounting bracket 250 is attached to a plate 260 that may be fastened to a building 270 or other structure using screws 280, bolts or the like. The mounting bracket 250 may be made of compliant plastic (or another suitable, outdoor-rated material) and comprises a latching member 290. To secure the mounting bracket 250 to the mounting channel 144, the profile of the latching member 290 is reduced by pressing the latching member 290 into the mounting channel 144, thereby squeezing both sides of the latching member about a slot 300, so that the latching member 290 is received by the mounting channel 144. Once the latching member 290 is within the channel 144, it springs back to reassume its uncompressed state (FIGURE 6A), thereby holding the lighting device 100 (230) in place.

The lighting devices 230 (100) may be advantageously constructed in segments of various lengths, such as 2, 4, or 8 feet. Two or more segments may be coupled together by a collar 310 as illustrated in FIGURES 7A and 7B. Within the collar 310 is a dual female connector 320 for receiving respective male connectors 330 from each of two lighting devices 230. The male connectors 330 are electrically connected to the printed circuit board 130, and the female connector 320 is tied electrically to a power source via an electrical line 340. The female connector 320 may be held in place within the collar 310 by, for example, rings or spokes (not shown) that extend within the collar. FIGURE 7C shows an alternative arrangement in which power is supplied via a single female connector 360 located at one end of one of the devices 230. In this case, adjacent devices 230 may be connected by a dual female connector (not shown) to which no electrical line 340 is attached.

A preferred embodiment of the optical diverter 110 is illustrated with respect to FIGURES 8-11. FIGURE 8 shows a cross section of an optical diverter 110a which includes a total internal reflection (TIR) region 400 with a surface 410 that is smoothly curved and defines a vortex shape forming an apex 421 that extends into the optical diverter 110a. The optical diverter 110a is surrounded by air, so that a refractive index interface is formed, which permits total internal reflection. The surface 410 of this embodiment substantially completely reflects light incident thereon, such that substantially no light is transmitted therethrough. The TIR region 400 may advantageously have the shape of an equiangular spiral that forms a cuspate portion 420. The surface 410 of FIGURE 8 is shown as being axially and circularly symmetrical and extending 360 degrees about a vertical axis 424 aligned with and passing through the point source 174. However, a TIR diverter (not shown) may be used in which the cuspate portion is symmetrical about a line rather than being symmetrically oriented about a point, as in FIGURE 8. Such a TIR diverter enjoys planar rather than radial symmetry.

In the embodiment of FIGURE 8, the point source 174, such as an LED, is mounted below the apex 421 of the TIR surface (i.e., just below the point on the cusp 420) in close proximity thereto, with the reflecting surface extending 360° about the LED and apex. The LED 174 is contained within an LED package 430, which resides within a recess

440 in the optical diverter 110a. In order to ensure good coupling into the optical diverters 110 disclosed herein, and to reduce reflections at the interface between the LED package 430 and the boundary of the recess 440, a transparent optical coupling agent (not shown), such as an adhesive or gel, may be used to preclude any optically interfering air gaps between the LED 174 and the optical diverter. The transparent optical coupling agent could be an epoxy, silicone, or any well-known organic or inorganic optical coupling material. Preferably, the refractive index of the coupling agent is between that of the LED package and the optical diverter 110.

The surface 410 may be curved, or it may include a plurality of flat surfaces approximating a curve to form a totally internally reflecting (TIR) lens having a focal point. When the point source 174 is positioned (as shown) at this focal point, light generated by the point source 174 is totally internally reflected from the surface 410. If the surface 410 is curved, any one of a number of shapes may be employed, such as a hyperboloid, paraboloid, cone, cusp or other surface of revolution. Mathematical modeling of these shapes can be performed with an optical analysis software package such as ASAP by Breault Research of Tucson, Arizona. The surface 410 is contoured such that substantially all light rays emitted from the LED 174 at the focal point of surface 410 are incident on the surface 410 at an angle at least equal to the critical angle. This may be accomplished by calculating the range of possible incidence angles of light rays from the LED 174 at the focal point at various local portions of the surface 410. The local portions are then oriented so that all rays are incident within the critical range. The local portions could be large in size so that the surface 410 consists of a collection of flat surfaces, for example. As the size of the local portion decreases, the surface 410 forms into a smoothly curved surface having, for example, the equiangular spiral shape shown in FIGURE 8.

While a circularly and axially symmetric cuspated surface is preferred for many applications, the surface 410 need not be symmetrical. In general, the surface 410 is flared so that light that reflects off of the surface 410 will be directed out of and away from the optical diverter 110a. In this sense, the optical diverter 110a of this embodiment acts as a lateral diverter of light. This flared surface 410 may be viewed as extending between an apex portion of the surface 410 (corresponding to the cusp 420 of FIGURE 8) and a base portion 450 above the apex. The base portion 450 flares outwardly (radially) from the vertical axis 424 that passes through the apex 421 and the point source 174. Thus, the flared reflecting surface 410 flares outwardly from the apex 421 to the base portion 450. A groove 480 in the embodiment of FIGURE 8 (and the embodiments of FIGURES 9, 10, 11 and 13 discussed below) has a depth such that substantially all rays which would otherwise propagate directly from the point source 174 to the side surface 120 of the diverter 110a are intercepted by at least one wall of the groove. Thus, the groove 480 prevents direct propagation of rays though the side surface 120 and onto the optical conditioning element 210, and thereby prevents such rays from causing non-uniformities in the output luminance.

FIGURES 9-11 depict the optical paths of various rays within the optical diverter 110a, in which FIGURE 9 is an overview of the various paths that light rays take. The optical diverter 110a is illustrated as having an annular groove 480, one face of which (surface 490) is frosted. The groove 480 redirects light from the LED 174 that is incident thereon. Light rays emanate from the LED 174 at the focal point of surface 410 within the LED package 430.

Some light rays 460 are refracted through the inner side surface of the grove 480 for propagation to the top surface of the groove, where the rays 460 are again refracted for propagation to the TIR reflecting surface 410. Other rays 470 pass within the region bounded by the inner side surfaces of the groove 480, and thus by-pass the groove for direct propagation to the TIR reflecting surface. Rays 460 and 470 both undergo TIR at surface 410, are reflected downwards, and eventually exit the diverter through side surface 120. As discussed above in connection with FIGURE 1, light exiting the diverter 110a is diffusely reflected by the sheet 150 and by the end caps 160 at either end of the device 100 (230), and eventually exits the device through the sheet member 170, which faces the diffusely reflecting sheet 150.

The progress of light rays 460 and 470 though the diverter 110a is shown in more detail in FIGURES 10 and 11, respectively. FIGURE 10 shows light rays 460 being refracted by the walls of the groove 480. While some rays 460a pass directly out of the side surface 120 of the diverter 110a after undergoing TIR, other rays 460b are internally reflected towards the frosted surface 490, where they are scattered in many directions before exiting the device 100 (230). FIGURE 10 also shows rays 465, which pass through the inner side surface of the groove 480 for propagation to the frosted outer side surface 490, where the rays 465 are scattered in many directions. This scattering prevents them from becoming visible through the output area. FIGURE 11 shows light rays 470 undergoing TIR at surface 410 and being refracted at face 120, whereupon the rays 470 exit the diverter 110a. Surface 410 can have a shape tailored to cause uniform illumination of the sheet 150.

Another TIR embodiment is illustrated in FIGURE 12, in which an optical diverter 110b includes a flared reflecting surface formed by a cuspate portion 492 and a refracting portion formed by an elliptical drum lens or torus portion 494, below the cuspate portion 492. Both the cuspate portion 492 and the refracting portion 494 are surfaces of revolution about an axis 496 that passes through the point source 174, as well as through the apex of the cuspate portion 492. Light rays 498 that strike surface 410b in the cuspate portion 492 undergo total internal reflection and exit the diverter 110b propagating nominally perpendicular to the axis 496. Light rays 500 exiting a surface 502 of the toroidal portion 494 are refracted so that they also propagate nominally perpendicular to the axis 496. Further, the surface 502 is designed so that substantially no rays propagate from the point source 174 through the side surface 120N without first undergoing TIR at surface 410b. The resultant distribution of light outside of the diverter 110b is such that the embodiment of FIGURE 12 acts with an isotropic hemispheric source to produce an equatorial distribution with a latitudinal beam width depending on the relative size of the point source 174. The diverter 110b is suitable for use in the lighting devices disclosed herein, but alternatively, it may be used by itself outside of a housing 140 (240) to produce 360 degree, latitudinally narrow output in the far field. Typical applications are aircraft warning beacons for high structures and marine beacon on buoys.

Although the embodiment illustrated in FIGURES 8-11 includes a surface 410 that is totally internally reflecting with respect to light rays 460 and 470, and the embodiment of FIGURE 12 also includes a surface 410b that is totally internally reflecting, an alternate embodiment comprises a surface 510 which is only partially rather than totally internally reflecting. As illustrated in FIGURE 13, this embodiment includes a flared surface comprising a

cuspate portion 420c and a base portion 450c. Optical radiation 520 that would otherwise be reflected for propagation through the side face 120 of the optical diverter 110c passes through (i.e., is diffusely transmitted by) the surface 510 for propagation directly through the sheet member 170, without reflecting off the reflective sheet 150 or one of the caps 160. This may enhance uniformity of illumination of the sheet member 170 and eliminate optical losses associated with reflections off the sheet 150 and the caps 160. In FIGURE 13, however, a substantial portion of the light rays 460 and 470 are preferably still totally internally reflected at surface 510. The optical diverter 110c may be advantageously sized to allow at least a substantial portion of the light reflected off the cavity sheet 150 to reach the optical conditioning element 210 without passing through the diverter 110c, and the reflective surfaces 150 and 160 arranged to allow at least a substantial portion of the light transmitted through the surface 510 to reach the optical conditioning element without reflection. This feature acts to compensate for reduced illumination of the sheet 150 just beneath the diverter 110c.

A surface 510 that is partially reflecting and partially transmitting may, in general, be formed by appropriately selecting the angle of incidence between the light rays 460 (470) and the surface 190. For example, the surface 510 may be formed at an angle that insures that some light "leaks through" the surface 190 while other light is reflected off of surface 190. Additionally, the apex of the cuspated portion may be rounded to provide controlled leakage of light from the LED 174 through the surface 510 immediately above the LED. This eliminates dark spots above the LED 174. Moreover, as illustrated in FIGURE 13, a surface 410 that is initially totally internally reflecting may be lightly sandblasted or etched to form distributed scattering centers 530 thereon, such that some of the light incident on the scattering centers passes through the surface 410. These scattering centers 530 may be distributed non-uniformly on the surface 410. Also, the surface 410 may be heavily etched or sandblasted to form a pattern such as a series of concentric rings 540 (see the diverter 110d of FIGURE 14) about a center 544 at an apex of the surface, which likewise results in some of the light leaking through the surface.

The optical diverters shown in FIGURES 8-14 may be comprised of material that is transparent to the light produced by the LED 174, such as a transparent polymeric material, and may be manufactured by various well-known methods, such as machining or injection molding. Preferred materials for the optical diverters 110 are acrylic, polycarbonate, and silicone. Acrylic, which has an index of refraction of approximately 1.5, is scratch-resistant and has a lower cost relative to polycarbonate. On the other hand, polycarbonate, which has an index of refraction of approximately 1.59, has higher temperature capabilities than acrylic. Polycarbonate also has improved mechanical capabilities over acrylic. Silicone has a refractive index of approximately 1.43. The refractive index of air is nearly 1.0.

While the reflectors of the preferred embodiments are flared, another embodiment (not shown) utilizes a non-flared planar reflector which is partially reflective and partially transmissive. Also, instead of using optical diverters 110 which rely upon total or partial internal reflection, reflection may be provided by partially or totally reflective mirrors (not shown), in which the mirrors are preferably contoured to reflect light laterally. Such mirrors may advantageously include a curved surface, so that light is reflected over a range of angles and scattered within the

device 100 (230) to provide uniform illumination of the sheet member 170. This function may also be performed by a transparent optical element that has a non-uniform change in its index of refraction, for example, a gradient index optical element.

The point sources 174 may advantageously comprise an LED cluster that provides tricolor output, e.g., red, green, and blue, so that virtually any color may be produced by appropriately selecting the relative intensity of the respective component wavelengths. Further, both gradual and fast time-changes in color are possible, and travelling wave patterns may be generated when the respective outputs of the LEDs 174 are successively varied in a coordinated fashion. Although the point sources 174 have been principally described with respect to LEDs, other point sources may be used, such as miniature incandescent filaments or arc lamps (not shown). However, LEDs are preferred because of their ability to operate at relatively low voltage (e.g., 24 volts DC or less). Also, LEDs generate no RF interference. As a further alternative to using LEDs as the point sources 174, a fiber optic line (not shown) may be used to distribute light to a series of optical diverters 110, in which light is tapped off at various points along the fiber optic line (corresponding to the point sources 174) and is directed into the diverters. In this case, a laser diode or other light generator may be used to couple light into the fiber optic line, and the fibers form the point sources of light.

The cylindrical or semi-cylindrical devices illustrated in FIGURES 1-4 may be used in a number of different applications, such as for decorative illumination, light boxes, backlights, and for guidance along pathways. Further, the housing utilized with the optical diverters 110 and sheet member 170 may be constructed in various sizes and shapes, including wide area planar, linear elongate, and curved elongate. FIGURE 15 illustrates one embodiment in which the letter "G" has been formed. Other possible embodiments will be apparent to those skilled in the art. For example, instead of positioning the optical diverters 110 along a line or a curve, the optical diverters may be mounted, for example, in a grid (not shown) to cover a wide-area display, the surface of which may have numbers, letters, logos, or other indicia printed thereon.

It should be understood that the scope of the present invention is not limited by the illustrations or the foregoing description thereof, and that certain variations and modifications of the foregoing embodiments will suggest themselves to one of ordinary skill in the art.

WHAT IS CLAIMED IS:

1. An illumination apparatus, comprising:

a cavity having reflective surfaces and an output area;

at least one light source disposed in said cavity, said light source comprising a point source and an optical diverter having a flared reflecting surface; and

an optical conditioning element over said output area, said optical conditioning element comprising at least a diffuser.

2. The apparatus of Claim 1, wherein said flared reflecting surface extends between an apex portion of said surface and a base portion of said surface, said diverter having an axis passing through the apex portion and the point source, said base portion being above the apex portion and extending radially outwardly from said axis such that the reflecting surface flares outwardly from the apex portion to the base portion.

3. The apparatus of Claim 2, wherein the flared surface is curved.

4. The apparatus of Claim 3, wherein the flared surface is cuspated.

5. The apparatus of Claim 2, wherein the flared surface is formed by a refractive index interface configured to totally internally reflect light from the point source laterally outwardly from said axis.

6. The apparatus of Claim 1, wherein the point source comprises an LED.

7. The apparatus of Claim 1 wherein the point source comprises a miniature incandescent filament or arc lamp.

8. The apparatus of Claim 1, wherein the optical conditioning element comprises a prism sheet.

9. The apparatus of Claim 8, additionally comprising a second prism sheet, each prism sheet having repeated structures oriented generally orthogonal to repeated structures of the other prism sheet.

10. The apparatus of Claim 8, wherein the prism sheet and diffuser are in substantially parallel relationship, with the diffuser closer to the light sources than the prism sheet.

11. The apparatus of Claim 1, wherein said cavity is within an elongate housing having a width which is not substantially greater than the width of the output area.

12. The apparatus of Claim 11, wherein the optical conditioning element comprises at least one prism sheet having repeated structures oriented at about 45° relative to a longitudinal axis of the elongate housing.

13. The apparatus of Claim 11, wherein the apparatus comprises at least two of said elongated housings coupled end to end.

14. The apparatus of Claim 1, wherein the point source and the optical conditioning element are separated by 3-1/2 inches or less.

15. The apparatus of Claim 1, wherein the point source and the optical conditioning element are separated by 2-1/2 inches or less.

16. The apparatus of Claim 1, wherein the point source and the optical conditioning element are separated by 1-1/2 inches or less.

17. The apparatus of Claim 1, wherein the cavity reflecting surfaces are diffusively reflective.

18. The apparatus of Claim 17, wherein the diffusively reflective surfaces have a reflectivity of at least 90%.

19. The apparatus of Claim 1, wherein the flared reflecting surface is partially reflective and partially transmissive.

20. An illumination apparatus, comprising:

a housing comprising a cavity having reflective surfaces and an output aperture;

an optical conditioning element across the output aperture, said conditioning element comprising at least one sheet having a plurality of pixels;

at least one light source disposed within said cavity directly beneath said conditioning element, said at least one light source comprising a point source spaced less than 3-1/2 inches from said sheet and illuminating said reflective surfaces such that the ratio of the luminance of adjacent pixels is between 0.95 and 1.05 and the ratio of the luminance of non-adjacent pixels is between 0.5 and 2.0, whereby the appearance of illumination at said sheet is substantially uniform.

21. The apparatus of Claim 20, wherein said reflective surfaces of said cavity are diffusively reflective with a reflectivity of at least 90%.

22. The apparatus of Claim 20, wherein said ratio of adjacent pixels is 0.98 to 1.02.

23. The apparatus of Claim 20, wherein said ratio of adjacent pixels is 0.99 to 1.01.

24. The apparatus of Claim 20, wherein said ratio of non-adjacent pixels is 0.57 to 1.75.

25. The apparatus of Claim 20, wherein said ratio of non-adjacent pixels is 0.67 to 1.5.

26. The apparatus of Claim 20, wherein said ratio of non-adjacent pixels is 0.77 to 1.3.

27. The apparatus of Claim 20, wherein said sheet comprises a prism sheet.

28. The apparatus of Claim 27, wherein the optical conditioning element comprises a diffuser sheet disposed below the prism sheet.

29. The apparatus of Claim 28, wherein the optical conditioning element comprises a second prism sheet.

30. The apparatus of Claim 20, wherein said at least one light source comprises a point source and a total internal reflection lens having a cuspated surface for reflecting light from the point source against said diffusive reflective surfaces.

31. The apparatus of Claim 20, wherein the apparatus has plural light sources spaced by 2-1/2 inches or less from the sheet.

32. The apparatus of Claim 20, wherein the apparatus has plural light sources spaced from each other by at least one-half inch.

33. An illumination apparatus, comprising:

a cavity formed by reflective material, said cavity having an output area;

an optical conditioning element at said output area;

a light source in said cavity, said light source comprising a point source and an optical diverter having a reflecting surface that is partially reflective and partially transmissive, said reflective surface allowing a portion of light incident thereon to pass through the reflecting surface, while reflecting another portion of the incident light onto the reflective material, said reflective material reflecting light within said cavity, whereby said output area and optical conditioning element are illuminated.

34. The apparatus of Claim 33, wherein said reflective material is diffusively reflective with a reflectivity of at least 90%.

35. The apparatus of Claim 33, wherein said reflecting surface of said optical diverter is comprised of a refractive index interface that totally internally reflects said substantial portion of the incident light while permitting another portion of light to pass through the interface.

36. The apparatus of Claim 35, wherein said reflecting surface of said optical diverter is comprised of scattering centers that scatter light incident thereon.

37. The apparatus of Claim 36, wherein the scattering centers are distributed over said reflecting surface.

38. The apparatus of Claim 37, wherein the distribution is non-uniform.

39. The apparatus of Claim 38, wherein the scattering centers are in the form of a pattern.

40. The apparatus of Claim 39, wherein the pattern comprises concentric rings having a center at a vertex of the reflective surface.

41. An illumination apparatus, comprising:

an optical diverter comprised of transparent material having a reflecting surface formed by a refractive index interface configured to totally internally reflect light from a point source positioned to emit a first portion of light rays towards the reflecting surface and a second portion of light rays towards a side surface of the diverter, said diverter comprising a refracting interface that refracts the second portion of light rays towards the reflecting surface, such that both the first and second portions of light rays are reflected from said reflecting surface.

42. The illumination device of Claim 41, wherein said point source emits a third portion of light rays towards said side surface, said diverter further comprising a scattering surface that scatters said third portion of rays.

43. The illumination device of Claim 41, wherein the point source is disposed at the bottom of the diverter, and the reflecting surface is oriented to reflect the first and second portions of light rays towards the bottom of the diverter.

44. An illumination apparatus, comprising:

an optical diverter comprised of transparent material having a flared reflecting surface formed by a refractive index interface, said interface configured to totally internally reflect light from a point source that is positioned adjacent to an apex of the flared reflecting surface and which emits light rays for reflection by the reflecting surface.

45. The apparatus of Claim 44, wherein at least a portion of the reflecting surface is partially transmissive such that some of the light is transmitted through the surface.

46. The apparatus of Claim 45, wherein said portion comprises the apex.

47. The apparatus of Claim 44, wherein the reflective surface substantially completely reflects light incident thereon, such that substantially no light is transmitted therethrough.

48. The apparatus of Claim 44, wherein the reflecting surface extends 360° about the apex.

49. The apparatus of Claim 44, comprising a drum lens that is integral and optically contingous with the diverter.

50. An illumination apparatus, comprising:

a cavity having reflective surfaces and an output area;

at least one light source disposed in said cavity, said light source comprising a point source and an optical diverter having a surface that is partially reflective and partially transmissive;

an optical conditioning element over said output area, said optical conditioning element comprising a diffuser, said diverter positioned between the point source and optical conditioning element such that (a) a portion of light emitted by the point source is reflected from the diverter towards the reflective surfaces of the cavity, and (b) another portion of light emitted by the point source is transmitted through the surface of the diverter towards the optical conditioning element, said diverter sized to allow at least a substantial portion of the reflected light to reach the optical conditioning element without passing through the diverter, said diverter and said reflective surfaces of said cavity arranged to allow at least a substantial portion of the transmitted light to reach the optical conditioning element without undergoing reflection.

51. The illumination apparatus of Claim 50, wherein the diverter comprises a lateral diverter.

52. The illumination apparatus of Claim 51, wherein the lateral diverter has a flared surface.

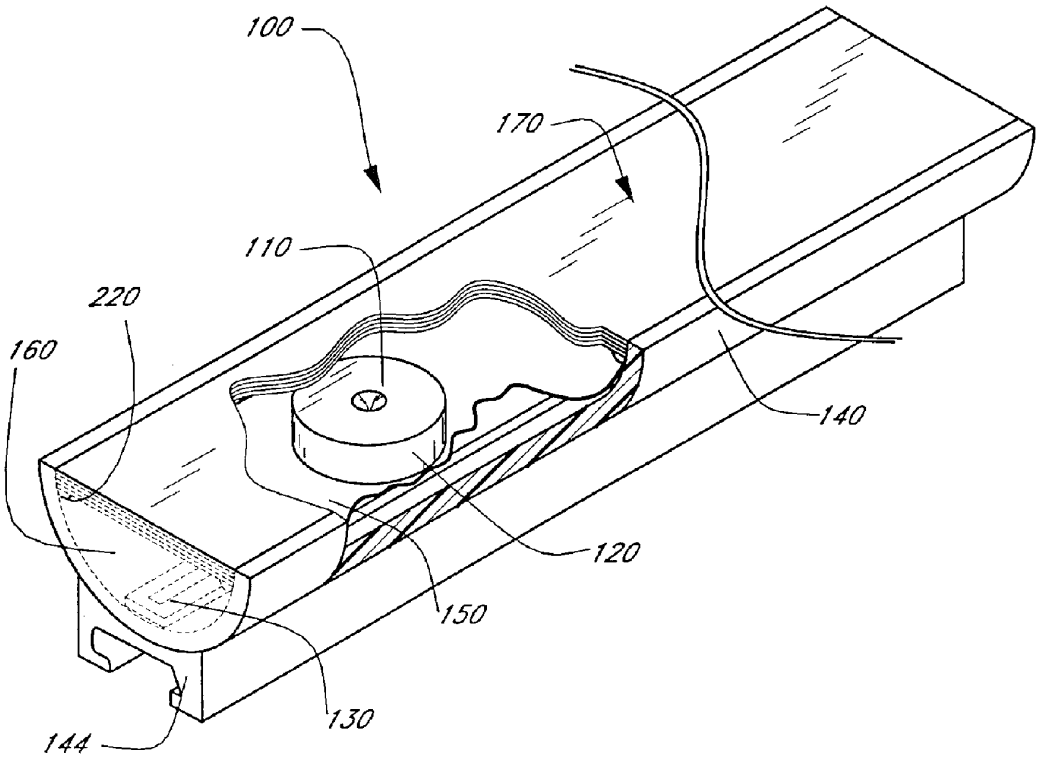

FIG. 1

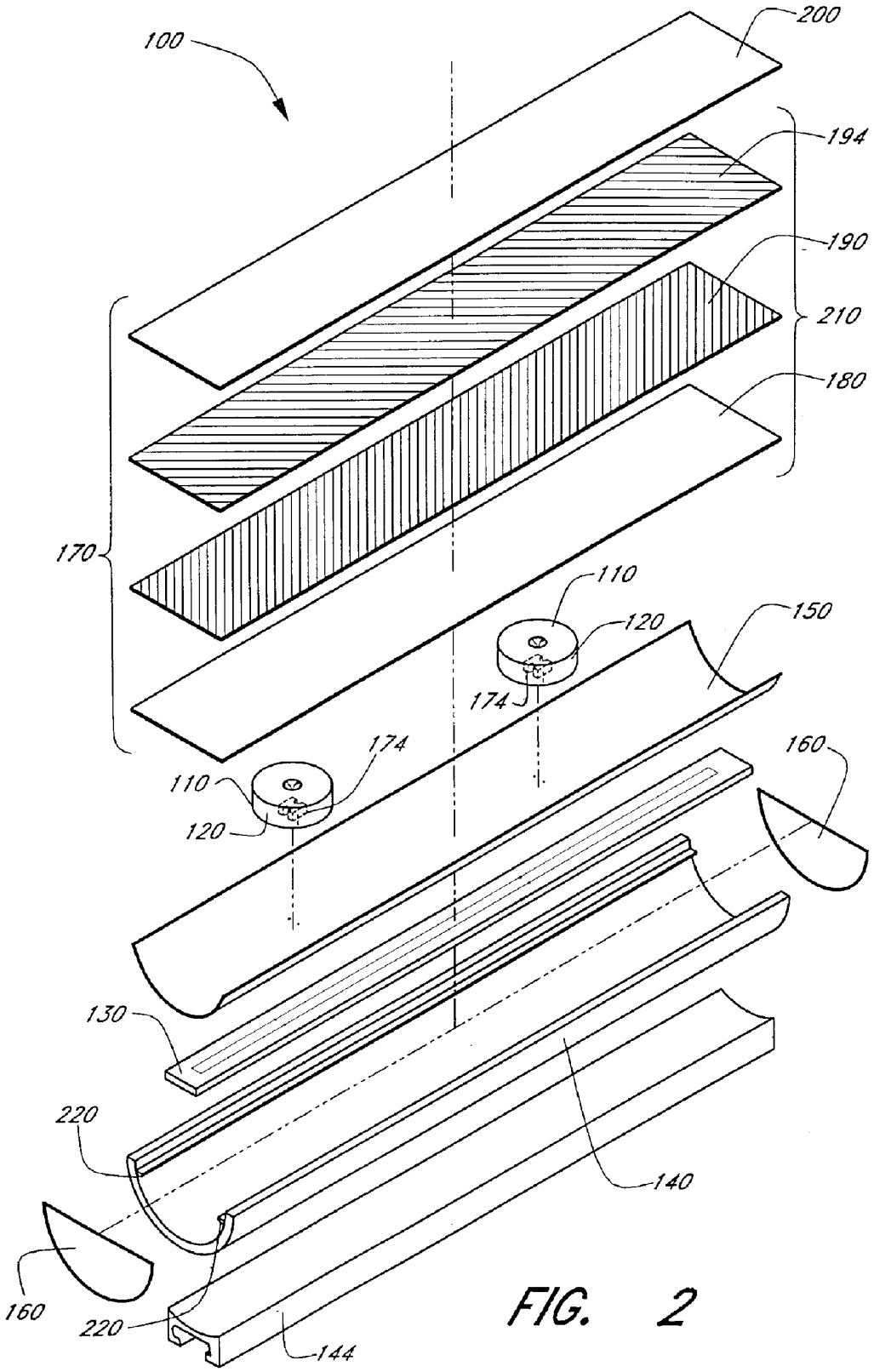
100
200
194
190
210
180
170
110
120
150
174
174
110
120
160
130
220
140
160
220
144

FIG. 2

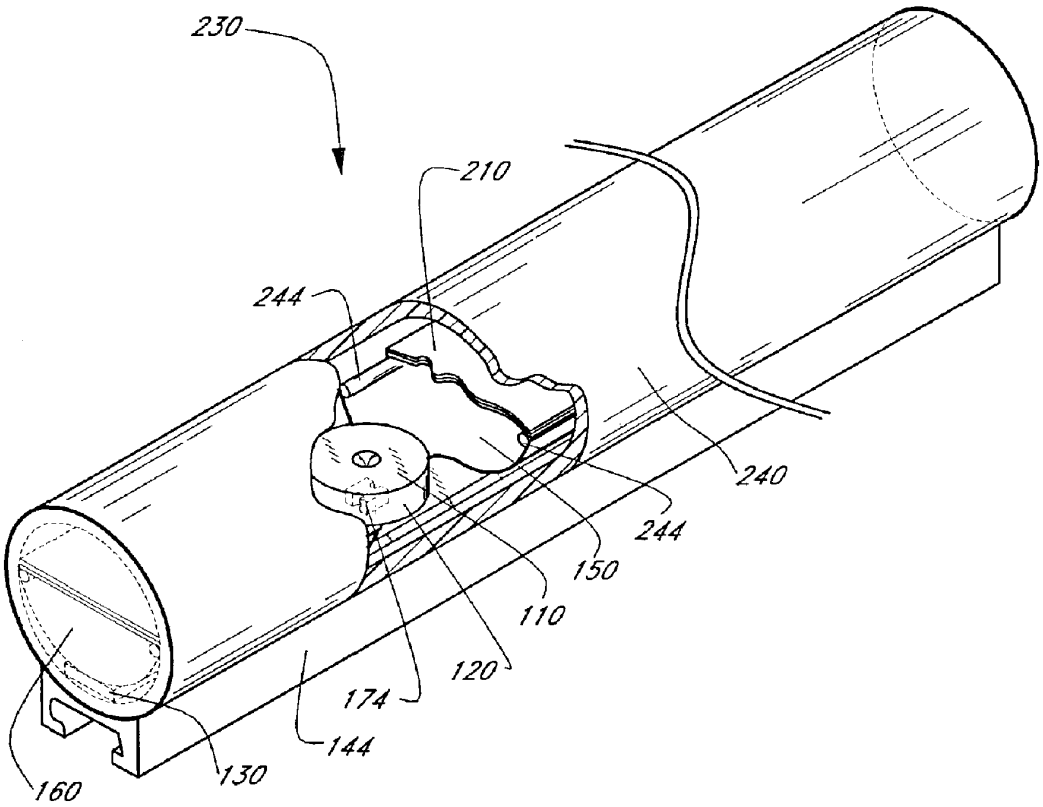

FIG. 3

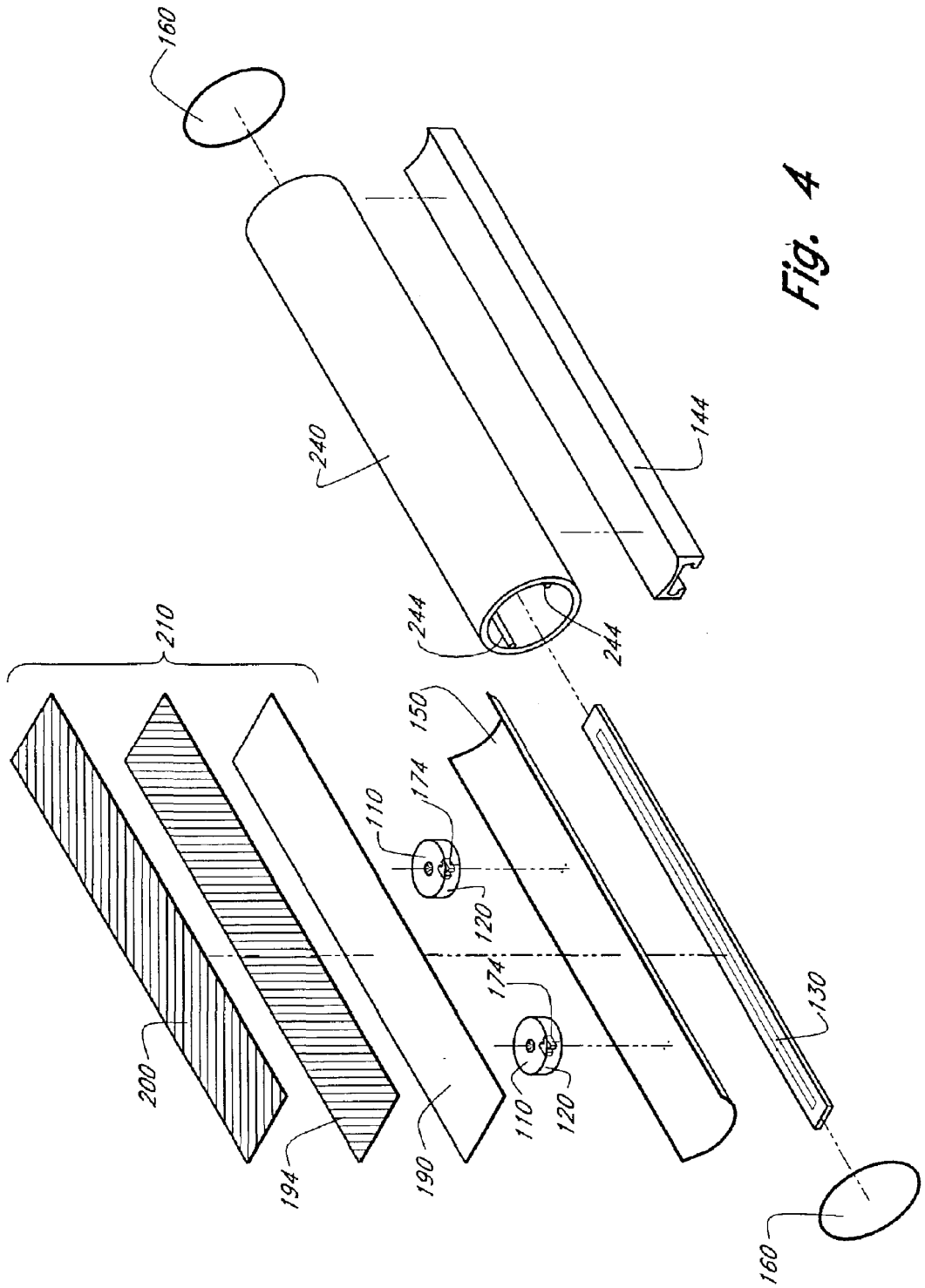
160
240
144
244
244
210
150
174
110
120
174
110
120
130
200
194
190
160

Fig. 4

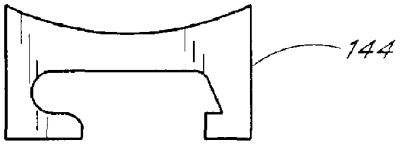

FIG. 5A

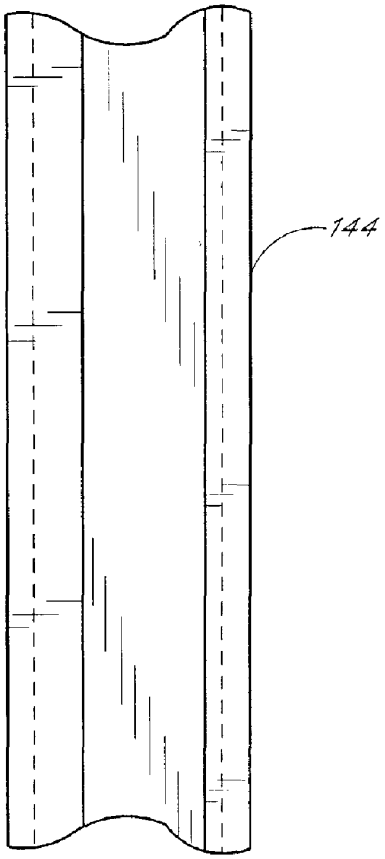

FIG. 5B

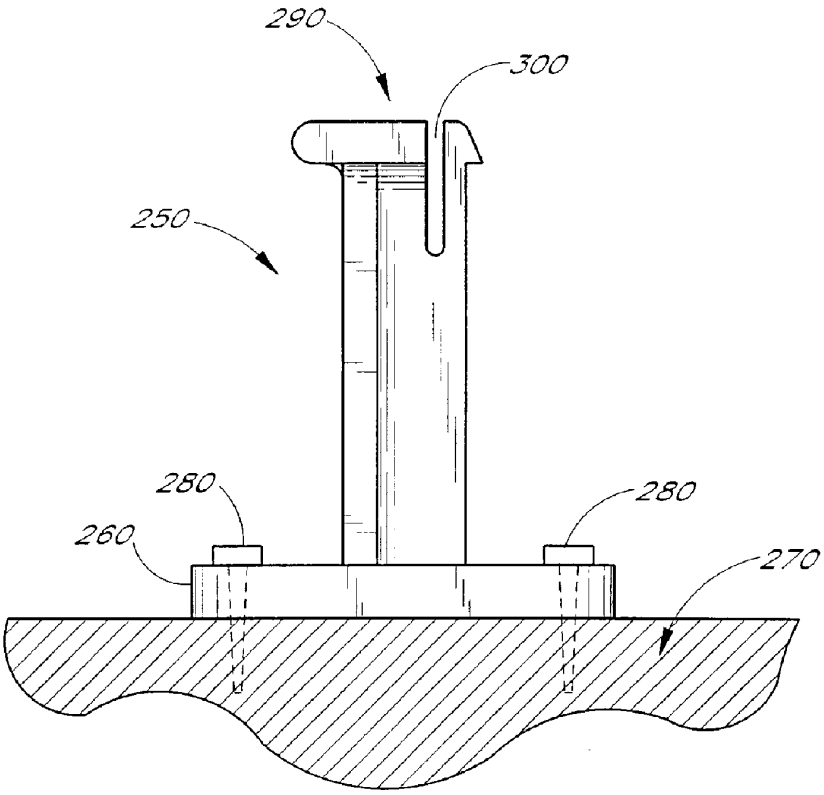

FIG. 6A

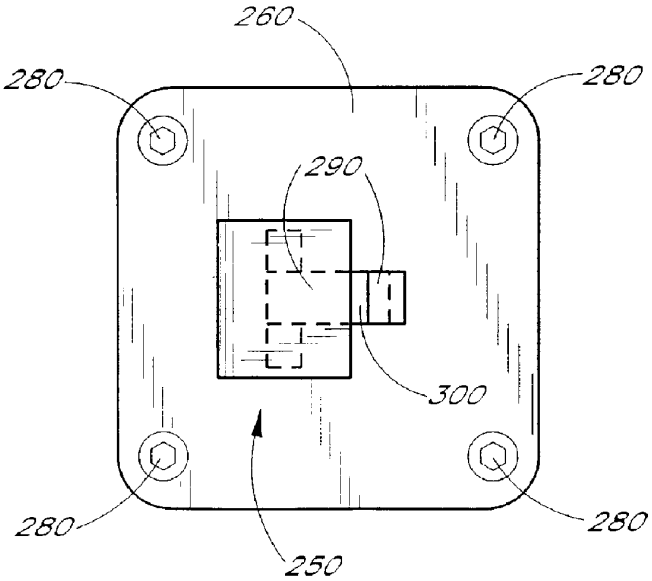

FIG. 6B

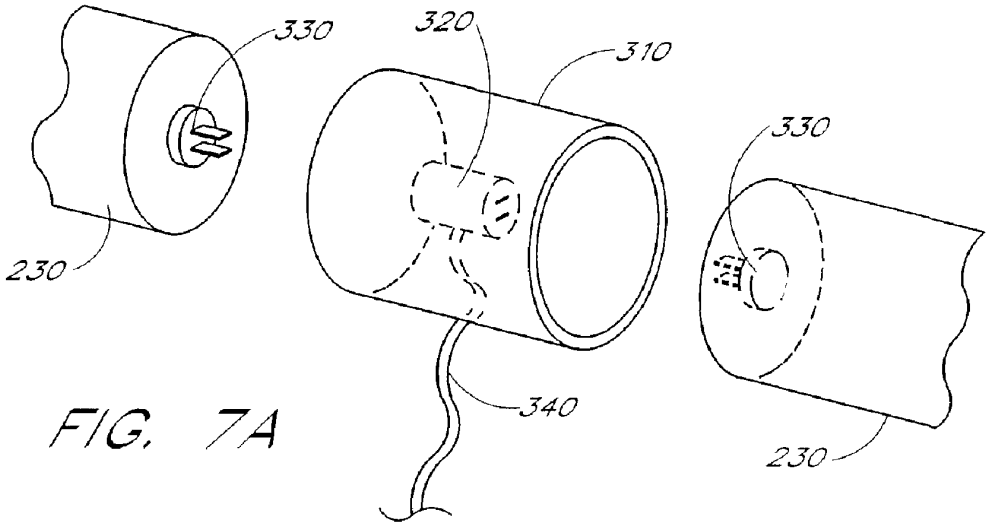

FIG. 7A

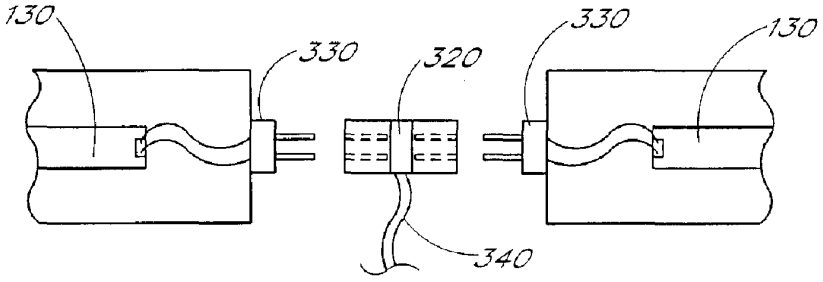

FIG. 7B

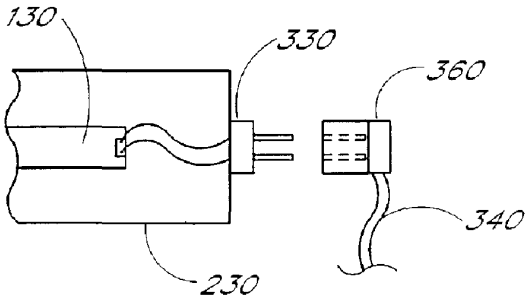

FIG. 7C

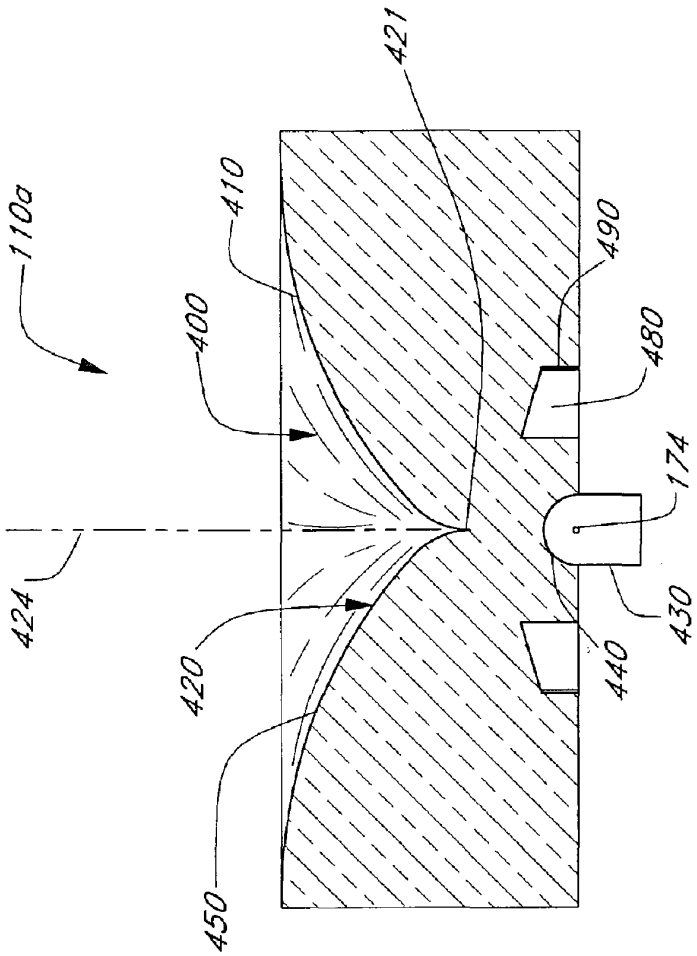

Fig. 8

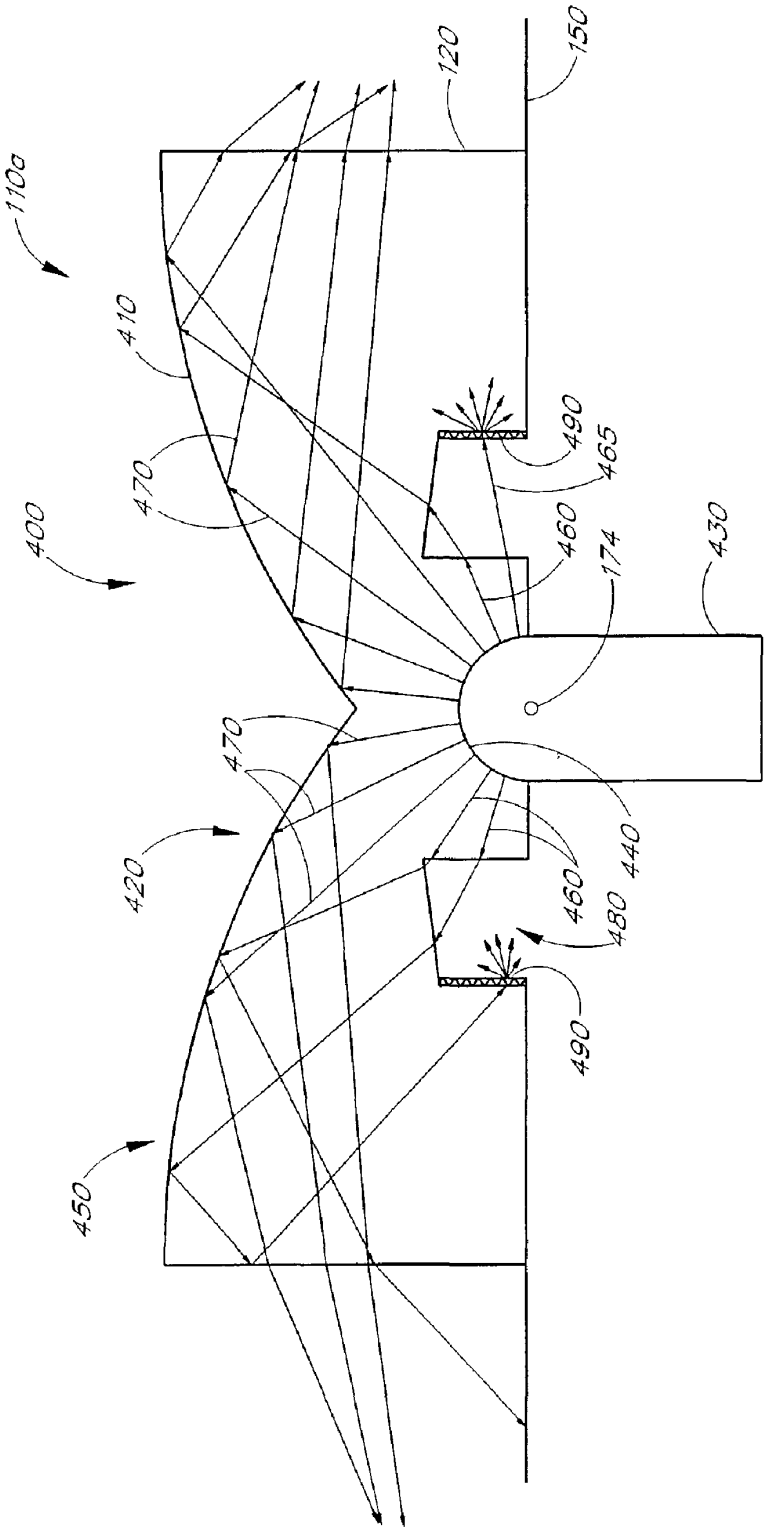
110a
400
410
420
450
470
470
120
150
490
465
460
174
430
440
460
480
490

FIG. 9

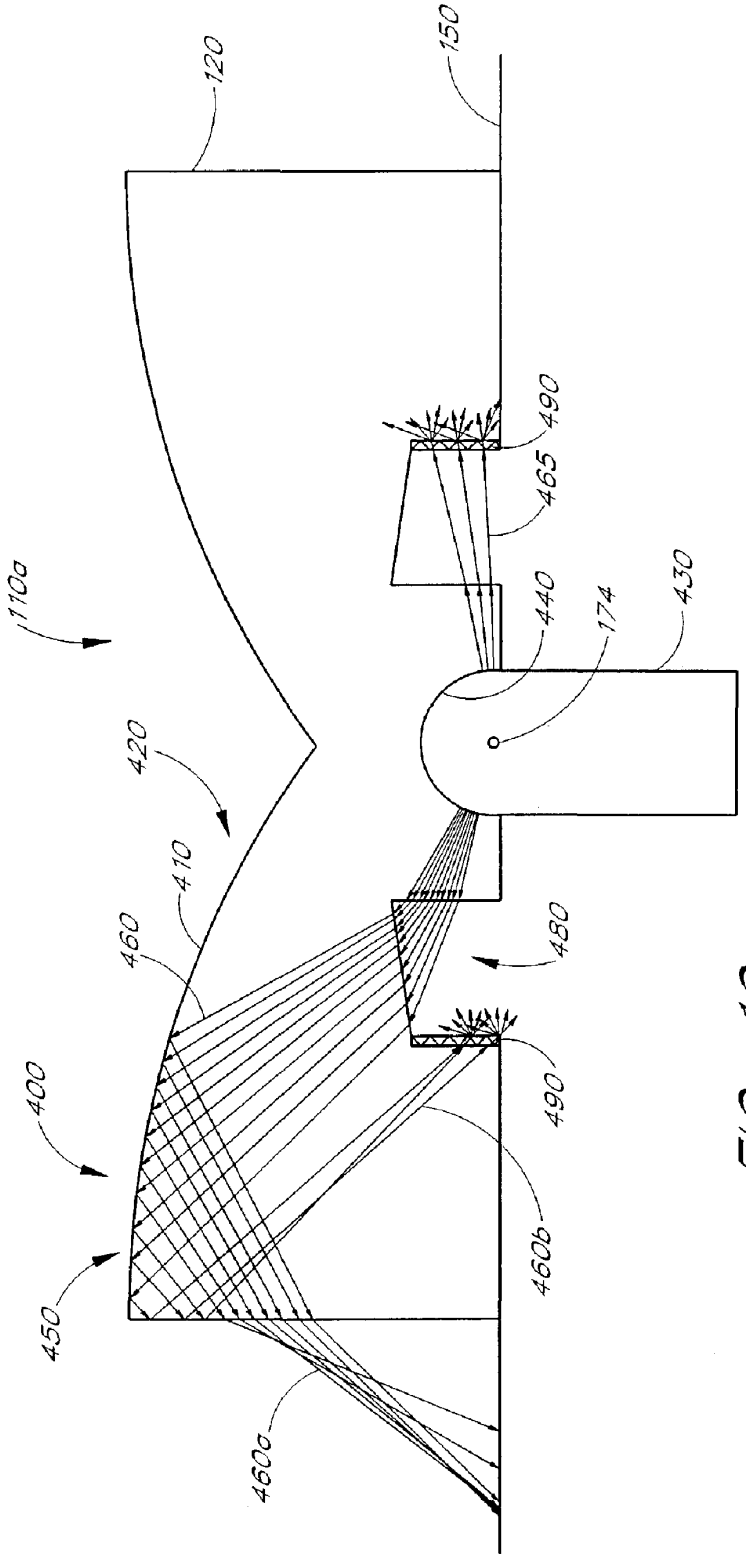
120
150
490
465
110a
440
174
430
420
410
460
480
400
490
460b
450
460a

FIG. 10

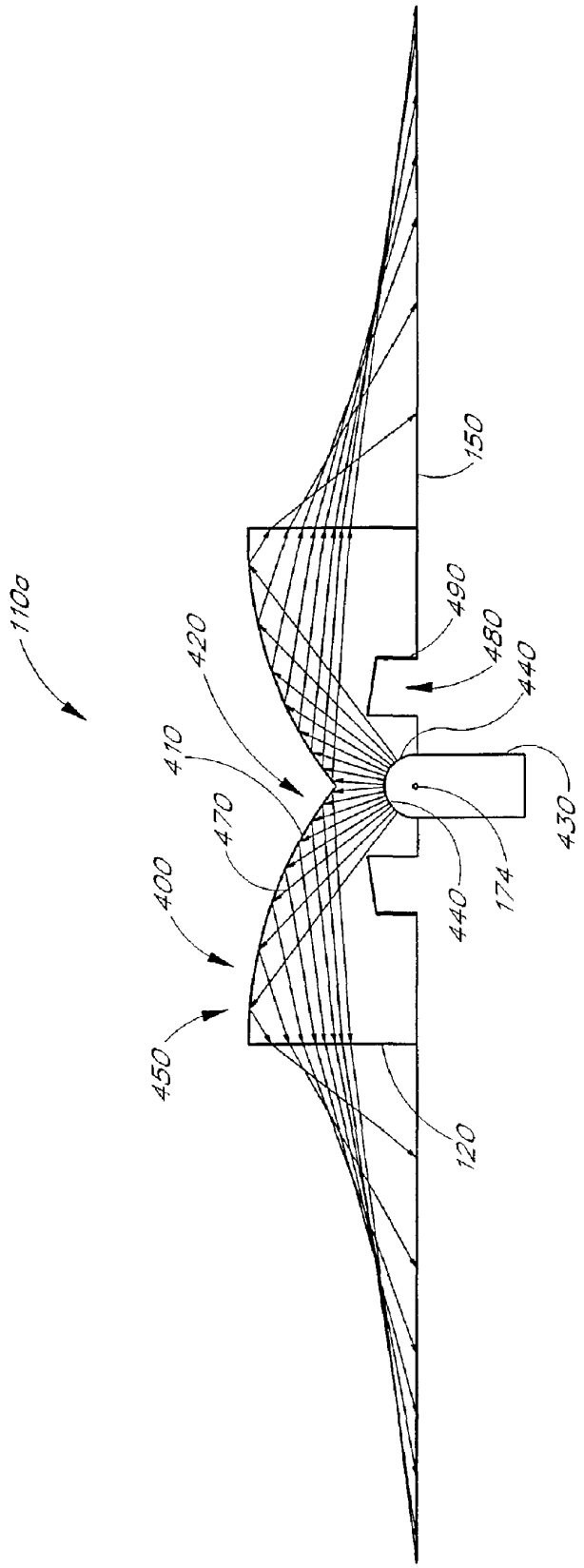

FIG. 11

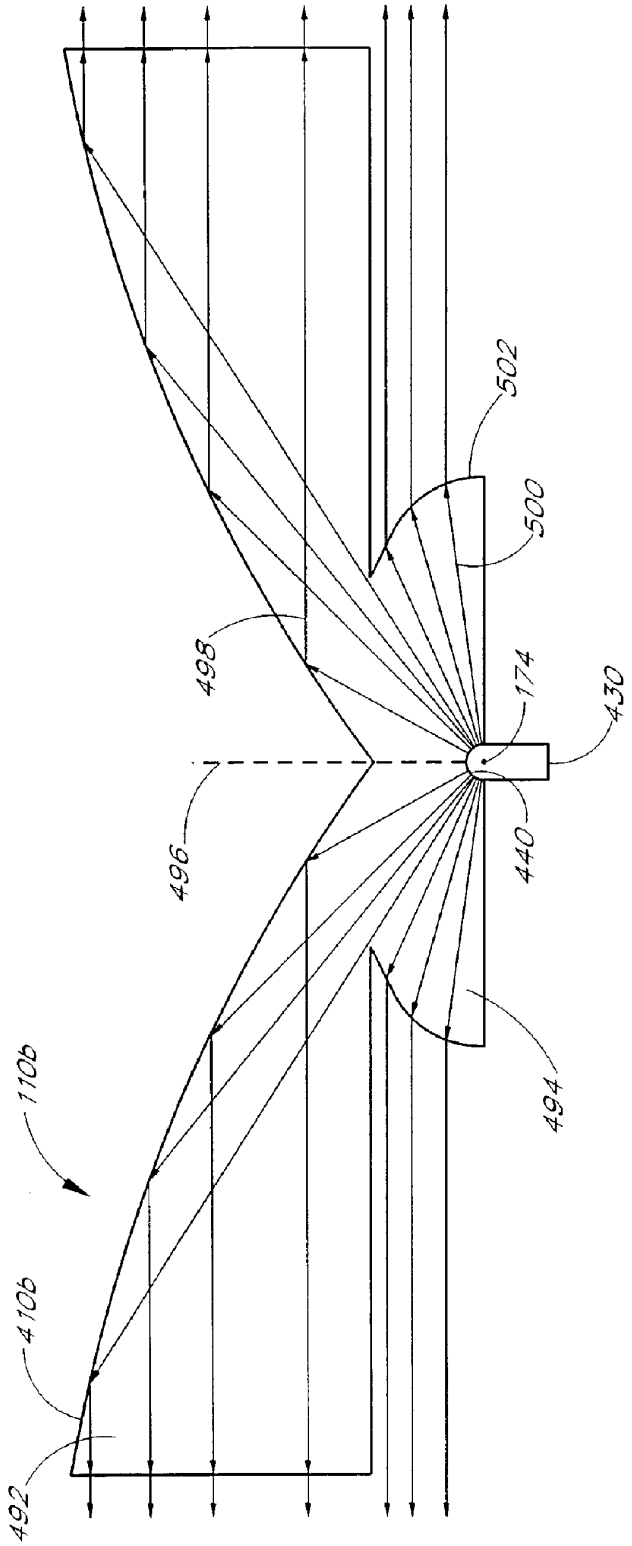

FIG. 12

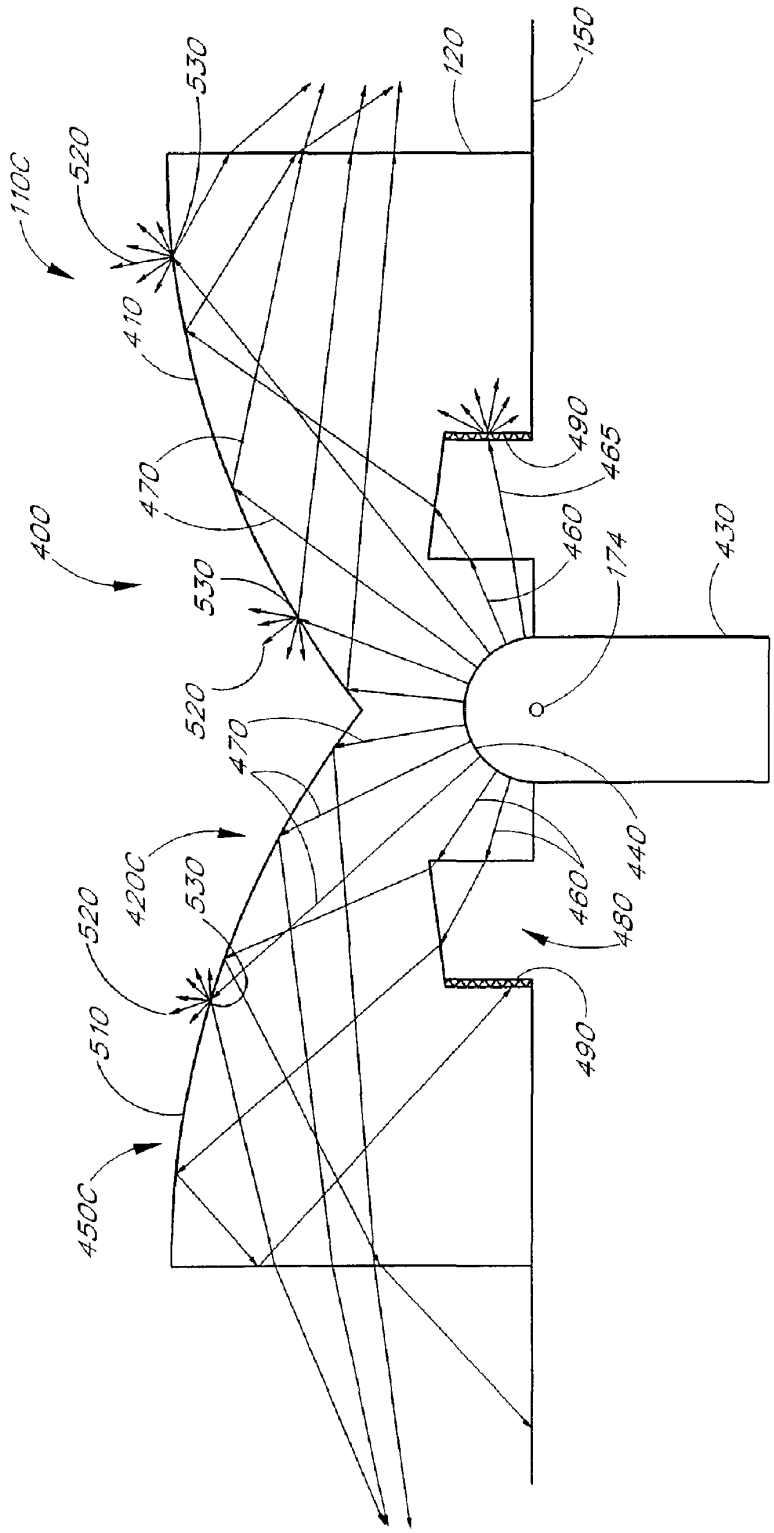
110C
520
530
410
470
400
530
520
470
420C
530
520
510
450C
120
150
490
465
460
174
430
440
460
480
490

FIG. 13

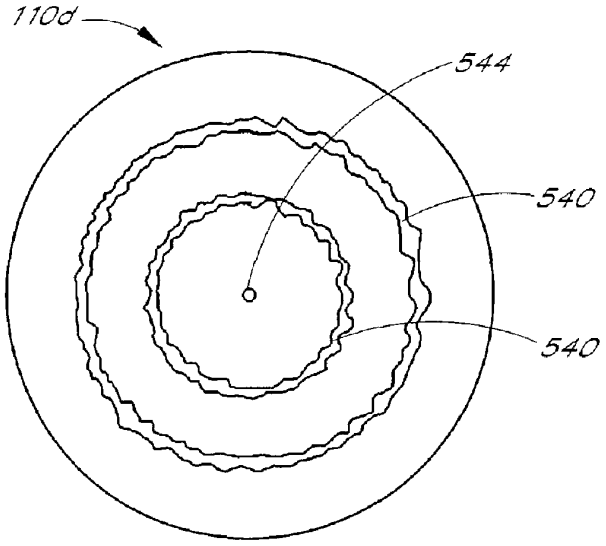

FIG. 14

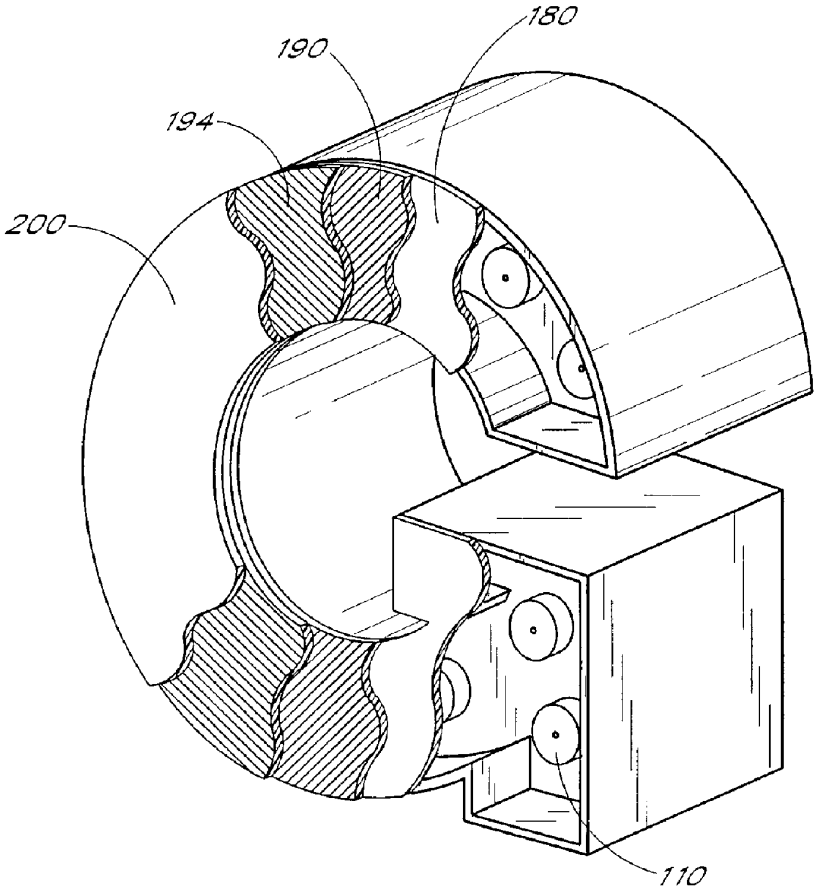

FIG. 15

Luminescent device

Publication number: CN1380704 (A)
Publication date: 2002-11-20
Inventor(s): KENJI SHIMOMURA [JP] +
Applicant(s): TOSHIBA KK [JP] +
Classification:
- international: ***H01L33/00;*** **H01L33/00**; (IPC1-7): H01L33/00
- European: H01L33/56
Application number: CN20021006198 20020409
Priority number(s): JP20010110675 20010409

Also published as:
CN1262023 (C)
EP1249875 (A2)
EP1249875 (A3)
US2002145152 (A1)
US6710377 (B2)
more >>

Abstract not available for CN 1380704 (A)
Abstract of corresponding document: **EP 1249875 (A2)**

A light emitting device includes a semiconductor light emitting element and a silicone resin provided to embed said semiconductor light emitting element, where silicone resin has a hardness not lower than 50 in JISA value. The use of a silicone resin as the resin for sealing the semiconductor light emitting elements instead of conventional epoxy resins can reduce the possibility of cracks, exfoliation, breakage of wire, etc. that were often caused by conventional epoxy resins, and can also improve the resistance to whether and light.

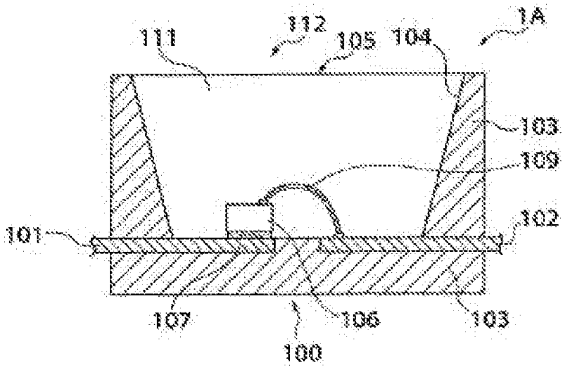

FIG.1

Data supplied from the ***espacenet*** database — Worldwide

[19]中华人民共和国国家知识产权局

[51]Int. Cl[7]
H01L 33/00

[12]发明专利申请公开说明书

[21]申请号 02106198.X

[43]公开日 2002年11月20日

[11]公开号 CN 1380704A

[22]申请日 2002.4.9 [21]申请号 02106198.X

[30]优先权

[32]2001.4.9 [33]JP [31]110675/2001

[71]申请人 株式会社东芝

地址 日本东京都

[72]发明人 下村健二

[74]专利代理机构 中国国际贸易促进委员会专利商标事务所

代理人 王永刚

权利要求书2页 说明书12页 附图7页

[54]发明名称 发光器件

[57]摘要

本发明的发光器件具备半导体发光元件(106)和被设计成覆盖上述发光元件的硅酮树脂(111),通过使上述硅酮树脂的硬度的JISA值为50以上,可减少在环氧树脂中有时产生的裂纹或剥离、或导线的断线等的可能性,也可改善耐气候性和耐光性。

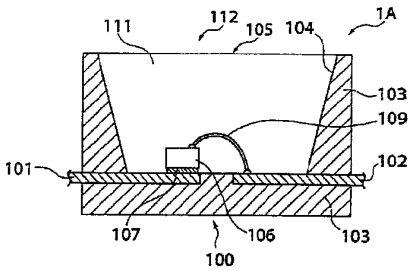

ISSN 1008-4274

知识产权出版社出版

1. 一种发光器件，其特征在于:

具备:

半导体发光元件；以及

被设置成覆盖上述半导体发光元件的硅酮树脂，

上述硅酮树脂的硬度的 JISA 值为 50 以上。

2. 如权利要求 1 中所述的发光器件，其特征在于:

上述硅酮树脂的硬度的 JISA 值为 90 以下。

3. 如权利要求 1 中所述的发光器件，其特征在于:

上述硅酮树脂的硬化前的粘度处于 100cp 以上至 10000cp 以下的范围内。

4. 如权利要求 1 中所述的发光器件，其特征在于:

还具备连接到上述半导体发光元件上的导线，

上述硅酮树脂也被设置成覆盖上述导线。

5. 如权利要求 1 中所述的发光器件，其特征在于:

还具备具有一对引线和填埋上述一对引线的至少一部分的树脂部的树脂管座，

将上述半导体发光元件安装在上述一对引线中的一方上。

6. 如权利要求 5 中所述的发光器件，其特征在于:

上述树脂部具有开口部，

在上述开口部的底部中，将上述半导体发光元件安装在上述一对引线中的一方上。

在上述开口部中设置了上述硅酮树脂。

7. 如权利要求 5 中所述的发光器件，其特征在于:

上述树脂部由热可塑性树脂构成。

8. 如权利要求 6 中所述的发光器件，其特征在于:

上述开口部的内部侧壁朝向开口端倾斜，

上述树脂部含有反射上述可见光的材料。

9. 如权利要求 1 中所述的发光器件，其特征在于:
上述硅酮树脂实质上是透明的。

发光器件

（一）技术领域

本发明涉及发光器件，特别是涉及具有将半导体发光元件密封在树脂中的结构的发光器件。

（二）背景技术

安装了 LED（发光二极管）等的半导体发光元件的发光器件作为各种指示灯、光源、平面型显示装置或液晶显示器的背照光源得到了广泛的应用。

在这些发光器件中，通常为了保护半导体发光元件免受外部气氛或机械的冲击等的影响，将其密封在树脂中来使用。

图 10 是例示这样的现有的发光器件的概略结构的剖面图。即，在该图中表示的发光器件是称为「表面安装型」等的器件，具有封装体（树脂管座）800、半导体发光元件 802 和作为密封体的环氧树脂 804。

树脂管座 800 具有利用由热可塑性树脂构成的树脂部 803 对由引线框成形的一对引线 805、806 进行了模塑的结构，而且，在树脂部 803 中形成了开口部 801，在其中放置了半导体发光元件 802。而且，利用环氧树脂 804 进行了密封，使其包含半导体发光元件 802。

将半导体发光元件 802 安装在引线 806 上。而且，利用导线 809 连接了半导体发光元件 802 的电极（未图示）与引线 805。如果通过 2 条引线 805、806 对半导体发光元件 802 供给功率，则产生发光，该发光通过环氧树脂 804 从光取出面 812 取出。

（三）发明内容

但是，本发明者进行研究的结果，判明了图 10 中例示的那样的发光器件在可靠性或长期的稳定性方面存在改善的余地。

即，如果对这样的发光器件在－40℃～＋110℃的温度范围内实施700次循环的温度循环试验，则发现了如图11中例示的那样在环氧树脂804中发生了裂纹、或在与树脂管座800的界面I上产生了剥离的现象。此外，也有在半导体发光元件802中产生「裂痕」或半导体发光元件802从安装面剥离或在导线809中产生断线的情况。

在图10中例示的那样的发光器件的情况下，作为通常的民用所要求的温度循环试验的等级为100次循环，因为即使作为车载用、其试验等级也只是300次循环，故满足了现行的要求，但为了今后以可靠性的进一步提高为目标，必须有根本的解决办法。

而且，同样的情况不限于图10中例示的那样的发光器件，在用环氧树脂密封了半导体元件的结构中，都共同地存在上述问题。

本发明者在对这些原因详细地进行了研究的结果，了解了环氧树脂804的物理性质是既硬又脆、硬化时的应力较大，再者，在与作为外围部分的热可塑性树脂的树脂部803的密接性方面也存在改善的余地。

本发明是根据对这样的课题的认识而进行的。即，其目的在于在用树脂密封了半导体发光元件的发光器件中提供减少了密封树脂的应力、使可靠性或长期的稳定性得到提高的发光器件。

为了达到上述目的，本发明的发光器件的特征在于具备：半导体发光元件；以及被设置成覆盖上述半导体发光元件的硅酮树脂，上述硅酮树脂的硬度的JISA值为50以上。

通过将这样的独特的硅酮树脂作为密封体来使用，可实现大幅度地提高了可靠性的发光器件。

此外，上述硅酮树脂的硬度的JISA值为90以下是特别合适的。

此外，可将上述硅酮树脂的硬化前的粘度定为处于100cp以上至10000cp以下的范围内。

此外，还具备连接到上述半导体发光元件上的导线，如果假定将上述硅酮树脂设置成也覆盖上述导线，则可抑制导线的断线或变形。

此外，还具备具有一对引线和填埋上述一对引线的至少一部分的

树脂部的树脂管座，如果假定将上述半导体发光元件安装在上述一对引线中的一方上，则可应用于具有通用性的发光器件。

此外，如果假定上述树脂部具有开口部，在上述开口部的底部中，将上述半导体发光元件安装在上述一对引线中的一方上，在上述开口部中设置了上述硅酮树脂，则可应用于表面安装型等的各种发光器件。

在此，如果假定上述树脂部由热可塑性树脂构成，则可使用具有通用性的封装体。

此外，如果假定上述开口部的内部侧壁朝向开口端倾斜，上述树脂部含有反射上述可见光的材料，则可构成反射面来提高光取出的效率。

再有，在本申请中，所谓「硅酮树脂」，指的是具有硅原子与氧原子交替地结合了的结构作为骨架的树脂，其中，硅原子具有烷基或丙烯基等的有机基。当然，假定在「硅酮树脂」中也包含在该骨架中供给了其它的添加元素的树脂。

如以上详细地叙述的那样，按照本发明，通过使用硅酮树脂代替现有的环氧树脂作为密封半导体发光元件的树脂，可减少在现有的环氧树脂中有时产生的裂纹、剥离或导线的断线等的可能性，也可改善耐气候的性能和耐光性。

再者，按照本发明，通过在硅酮树脂中使用橡胶状的硅酮树脂，可进一步改善发光特性、可靠性和机械强度。

即，按照本发明，可提供能得到各种发光色的稳定的发光的发光器件，产业上的优点是很明显的。

（四）附图说明

图 1 是示意性地表示本发明的实施例的发光器件的主要部分的结构的剖面图。

图 2 是示意性地表示本发明的发光器件的第 2 具体例的主要部分的结构的剖面图。

图 3 是示意性地表示本发明的发光器件的第 3 具体例的主要部分

EX1003, Page 542

的结构的剖面图。

图 4 是示意性地表示本发明的发光器件的第 4 具体例的主要部分的结构的剖面图。

图 5 是示意性地表示本发明的发光器件的第 5 具体例的主要部分的结构的剖面图。

图 6 是表示本发明的第 5 具体例的变型例的剖面图。

图 7 是示意性地表示本发明的发光器件的第 6 具体例的主要部分的结构的剖面图。

图 8 是示意性地表示本发明的发光器件的第 7 具体例的主要部分的结构的剖面图。

图 9 是表示本发明的第 7 具体例的变型例的剖面图。

图 10 是表示现有的发光器件的概略结构的剖面图。

图 11 是表示现有的发光器件的概略结构的剖面图。

（五）具体实施方式

本发明是通过使用具有较高硬度的硅酮树脂代替现有的环氧树脂作为密封半导体发光元件的树脂，来提供可靠性或长期的稳定性得到了很大的提高的发光器件。

以下，一边参照附图，一边说明本发明的实施例。

图 1 是示意性地表示本发明的实施例的发光器件的主要部分的结构的剖面图。

即，该图中例示的本实施例的发光器件 1A 具有树脂管座 100、被安装在其上的半导体发光元件 106 和被设计成覆盖元件 106 的密封体 111。

树脂管座 100 具有由引线框形成的引线 101、102 和与其一体地形成的树脂部 103。树脂部 103 在典型的情况下由热可塑性树脂构成。作为热可塑性树脂，例如是尼龙类的树脂，可使用具有非激活的结合基的树脂。

作为热可塑性树脂，例如可使用液晶聚合物（LCP）、聚苯撑硫

EX1003, Page 543

（PPS：热可塑性塑料）、间规聚苯乙烯（SPS：结晶性聚苯乙烯）等的高耐热性树脂。此外，树脂部 103 的外形的平面形状，例如可作成约 2.0mm ×2.0mm ~ 6.0mm ×6.0mm 的大致正方形或约 2.0mm × 3.0mm ~ 5.0mm ×7.0mm 的大致长方形等。

将引线 101、102 配置成其各自的一端接近地相对。引线 101、102 的另一端彼此在相反的方向上延伸，从树脂部 103 导出到外部。

在树脂部 103 上设置了开口部 105，将半导体发光元件 106 安装在其底面上。开口部 105 的平面形状例如可作成大致椭圆形或圆形等。开口部 105 的底面窄、上端中的开口宽，从底面到上端开口形成了反射来自发光元件 106 的光的倾斜的反射面 104。

将发光元件 106 配置成偏离开口部 105 的底面的中心。之所以使发光元件这样地偏离中心，是为了确保键合导线的区域和为了在发光元件 106 的侧面附近形成反射面 104 以提高反射效率来实现高亮度。

利用银（Ag）膏等的粘接剂 107，将发光元件 106 安装在开口部 105 的底面的引线 101 上。发光元件 106 在表面上具有电极（未图示），利用金（Au）线等的键合导线 109 与引线 102 连接。

在此，在本发明中，使用了硅酮树脂作为充填在开口部 105 内的密封体 111，来代替现有的环氧树脂。

即，如果将硅酮树脂与环氧树脂比较，则其脆性低，难以产生裂纹。此外，本发明的硅酮树脂与由热可塑性树脂构成的树脂部 103 的附着强度也强、耐湿性高、因温度应力引起的裂纹或剥离少。此外，通过充填硅酮树脂，可显著地减轻因周围的温度变化引起的对于发光元件 106 和 Au 导线 109 的树脂应力。

本发明者从该观点出发进一步进行研究的结果，发现了，如果在硅酮树脂中使用硬度高的「橡胶状」的硅酮树脂，则可得到良好的结果。即，作为硅酮树脂，通常众所周知的是作为 JIS 规格的硬度的 JISA 硬度值大致为 30 ~ 40 的树脂。这种硅酮树脂具有接近于「凝胶状」的物理性质，在物理性质方面较为柔软。以下，将该硅酮树脂称为「凝胶状硅酮树脂」。

EX1003, Page 544

与此不同，「橡胶状硅酮树脂」的 JISA 硬度大致处于 50～90 的范围内。顺便说一下，作为现有的发光器件的密封体材料而广泛地被使用的环氧树脂的 JISA 硬度大致为 95 左右。

本发明者独立地对「橡胶状硅酮树脂」和「凝胶状硅酮树脂」进行了比较研究的结果，得到了以下的实际知识。

（1）在图 1 中例示的那样的发光器件中，在将突出到引线 101、102 的外部的部分（称为「外引线」等）固定到在规定的区域上覆盖了焊锡的安装基板上时，大多经过被称为「回流（reflow）」的焊锡熔融的工序。但是，在凝胶状硅酮树脂的情况下，如果加热，则发生软化，有时在树脂部 103 的界面上产生剥离等。

与此不同，在橡胶状硅酮树脂的情况下，未见到这样的现象，即使在超过 110℃的条件下，发光器件也显示出稳定的工作。

（2）由于凝胶状硅酮树脂是柔软的，故施加到发光元件 106 或导线 109 上的应力小，但另一方面存在抗外力的作用弱的缺点。即，图 1 中例示的那样的发光器件例如作为「表面安装型」的灯来使用，大多利用组件装置安装到安装基板等上。此时，大多在密封体 111 的表面上压接组件装置的吸附夹具。在使用了 JISA 硬度为 30～40 的凝胶状硅酮树脂的情况下，由于按压吸附夹具，故密封体 111 发生变形，伴随于此，存在导线 109 发生变形、断线或对发光元件 106 施加应力的情况。

与此不同，在使用了 JISA 硬度为 50～90 的橡胶状硅酮树脂的情况下，可防止因发光器件的筛选或组件时的筛选装置或组件装置引起的硅酮树脂的变形。

如以上（1）和（2）中已说明的那样，通过在硅酮树脂中使用橡胶状硅酮树脂，可进一步改善发光特性、可靠性和机械强度。

作为提高硅酮树脂的硬度的方法之一，可举出添加触变性赋予剂的方法。

此外，在充填硅酮树脂时，通过开口窄的喷嘴，滴到安装在树脂管座 100 的开口部 105 中的发光元件 106 上。其后，使其硬化来形成。

EX1003, Page 545

此时，如果使用硬化前的粘度为 100cp 至 10000cp 的硅酮树脂，则可知不会对发光元件 106 或导线 109 施加过度的应力，可无空隙地充填在狭窄的开口部中，此外，可将硬化时的残留应力也抑制在足够低的范围内。

按照本发明者根据以上已说明的实际知识进行的一个实施例，使用硬化前的粘度为 1000cp、硬化后的 JISA 硬度值为 70 的橡胶状硅酮树脂，试制图 1 的发光器件，在－40℃～＋110℃的温度范围内实施温度循环试验时，即使在 1500 次循环的情况下，也完全没有产生硅酮树脂 111 的裂纹或剥离、发光元件 106 的裂痕或剥离、导线 109 的断线等的问题。

即，已确认，通过使用硅酮树脂、特别是橡胶状硅酮树脂，可减少在现有的环氧树脂中有时产生的裂纹或剥离、或导线的断线等的可能性。

此外，在使用了硅酮树脂的情况下，可得到能提高光的取出效率这样的效果。即，本发明者发现了在本发明中使用的硅酮树脂、特别是橡胶状硅酮树脂中也有透明的硅酮树脂的情况。这样，如果使用透明的硅酮树脂，则可提高从发光元件 106 发出的光的取出到外部用的效率。即，能以低成本提供明亮的发光器件。

而且，如果使用硅酮树脂，则也可得到改善对于从半导体发光元件 106 发出的光或从发光器件的外部侵入的光的耐久性的效果。即，在环氧树脂的情况下存在下述问题：因光的照射而产生变色，即使起初是透明的，但长时间的使用后，光透过率下降。

光的波长越短，该现象就越显著，例如，在照射紫外线的情况下，起初为透明的环氧树脂发生变色，从黄色变成茶褐色，进而变成黑色。作为其结果，有时产生光的取出效率大幅度地下降的问题。也有从发光器件的外部侵入这样的紫外线的情况。

与此不同，本发明者进行了独立的试制研究的结果，了解了，如果使用硅酮树脂则可得到极为良好的结果。即，在使用硅酮树脂的情况下，即使长时间照射紫外线等的短波长的光，也完全不产生变色等

EX1003, Page 546

的性能恶化。即，硅酮树脂可维持起初的透明的状态。作为其结果，可实现在耐光性或耐气候性方面良好的、能长时间地维持高的外部取出效率的发光器件。

再有，在图 1 中例示的发光器件中，也可对树脂部 103 赋予光反射性。例如，利用 65 重量％以上的热可塑性树脂和充填量为 35 重量％以下的充填剂来形成树脂部 103。而且，充填剂含有氧化钛（TiO_2）、氧化硅、氧化铝、硅石、矾土等的高反射性的材料，例如，将氧化钛的含有量定为 10～15 重量％。通过利用以这种方式添加了使光反射的发散材料的树脂部来构成反射面 104，可使来自元件 106 的光反射到上方，实现发光器件的高亮度。此外，如果将反射面 104 的形状作成旋转抛物线形状等，则可提供输出更高、品质更高的发光器件。

以上，一边参照图 1，一边说明了本发明的实施例。但是，本发明不限定于该具体例，将本发明应用于具有用树脂密封了半导体发光元件的结构的全部的发光器件都可得到同样的效果。

以下，一边参照附图，一边介绍应用了本发明的发光器件的其它的几个具体例。

（第 2 具体例）

图 2 是示意性地表示本发明的发光器件的第 2 具体例的剖面图。在该图中，对于与关于图 1 已叙述的同样的要素附以同一符号，省略详细的说明。

本实施例的发光器件 1B 也具有树脂管座 100、被安装在其上的半导体发光元件 106 和由被设计成覆盖元件 106 的硅酮树脂构成的密封体 111。

但是，在本实施例中，密封体 111 只覆盖发光元件 106 的周围，在其外侧设置了由光透过性树脂构成的第 2 密封体 213。

作为第 2 密封体 213 的材料，可使用环氧树脂或硅酮树脂等的各种材料。此外，也可对第 2 密封体 213 进行着色。此时，也可自由地选择对色素或着色剂的适应性良好的材料。

再者，也可在第 2 密封体 213 中分散使光散射的发散材料。如果

EX1003, Page 547

这样做，则可使光发散，得到宽的光度分布特性。

此外，如果使用硅酮树脂作为第 2 密封体 213，则可增加与密封体 111 的密接性，提高耐湿性。

再有，在本具体例中，由于用硅酮树脂构成的密封体 111 包围了 Au 导线 109 的整体，故可实现没有因树脂应力引起的断线的可靠性高的发光器件。即，如果导线的一部分突出到第 2 密封体 213，则因在密封体 111 与 213 的界面上产生的应力而容易产生断线等。与此不同，在本具体例中，由于导线 109 的整体被包含在密封体 111 中，故没有断线的担心。

（第 3 具体例）

其次，说明本发明的第 3 具体例。

图 3 是示意性地表示本发明的发光器件的第 3 具体例的剖面图。在该图中，对于与关于图 1 至图 2 已叙述的同样的要素也附以同一符号，省略详细的说明。

本实施例的发光器件 1C 也具有树脂管座 100、被安装在其上的半导体发光元件 106 和被设计成覆盖元件 106 的密封体 111。

而且，与第 2 具体例相同，密封体 111 只覆盖发光元件 106 的周围。但是，在本具体例中，密封体 111 的外侧成为开放空间，未设置另外的密封体。

在本具体例中，通过用密封体 111 只包围安装在开口部 105 的底面上的发光元件 106 的附近，通过减小发光部分的尺寸，亮度上升，再者，进一步提高了由反射面 104 得到的聚光作用。

特别是，在本具体例中，由于大致呈半球状的密封体 111 成为发光点，作成了反射面 104 包围其周围的结构，故可得到与现有的等同样的光学的聚光效果。

再者，与第 2 具体例相同，由于密封体 111 包围了 Au 导线 109 的整体，故也可确保没有因树脂应力引起的断线的高可靠性。

（第 4 具体例）

其次，说明本发明的第 4 具体例。

EX1003, Page 548

图 4 是示意性地表示本发明的发光器件的第 4 具体例的剖面图。在该图中，对于与关于图 1 至图 3 已叙述的同样的要素也附以同一符号，省略详细的说明。

本实施例的发光器件 1D 也与第 1 具体例相同，具有树脂管座 100、被安装在其上的半导体发光元件 106 和被设计成覆盖元件 106 的密封体 111。

而且，在本具体例中，在密封体 111 上设置了凸状的透光体 413。利用这样的凸状透光体 413 可得到聚光作用。作为凸状透光体 413 的材料，例如可使用树脂。特别是，如果使用硅酮树脂，则可减小与密封体 111 的折射率，可减少因在与密封体 111 的界面上的反射引起的损耗。

此外，透光体 413 的凸状形状不限定于球面状，可根据所需要的聚光率或光度分布来适当地决定。

（第 5 具体例）

其次，说明本发明的第 5 具体例。

图 5 是示意性地表示本发明的发光器件的第 5 具体例的剖面图。在该图中，对于与关于图 1 至图 4 已叙述的同样的要素也附以同一符号，省略详细的说明。

本实施例的发光器件 1E 也与第 1 具体例相同，具有树脂管座 100、被安装在其上的半导体发光元件 106 和被设计成覆盖元件 106 的密封体 111。

但是，在本具体例中，在密封体 111 的周围没有设置树脂部 103 的侧壁。如果这样做，则来自发光元件 106 的发光不仅向上方发出，而且也向横方向发出，可实现宽的光度分布。因而，适合应用于要求宽的视野角度或宽的发射角度那样的用途。

再有，本具体例中的密封体 111 或树脂管座 100 的形状不限定于图示了的具体例。例如，也可如图 6 中所示那样，将密封体 111 作成大致半球状，此外，在树脂管座 100 中，树脂部 103 可填埋引线 101、102 并在元件周围具有低的侧壁。

（第 6 具体例）

其次，说明本发明的第 6 具体例。

图 7 是示意性地表示本发明的发光器件的第 6 具体例的剖面图。在该图中，对于与关于图 1 至图 6 已叙述的同样的要素也附以同一符号，省略详细的说明。

本实施例的发光器件 1F 也具有由引线框形成的一对引线 101、102。但是，在第 1 引线 101 的前端设置了杯状部分 601，将发光元件 106 安装在杯状部分 601 的底部。而且，将导线 109 从发光元件 106 连接到引线 102 上。再者，设置了密封体 111，使其包围这些部分。

杯状部分 601 的内壁侧面起到反射面的作用，使从发光元件 106 发出的光反射到上方。此外，透光体 713 的上表面具有透镜状的聚光作用，也可取出收敛光。

本具体例的发光器件是代替现有的灯型的半导体发光器件的发光器件，具有较宽的发射角度，成为通用性高的发光器件。

（第 7 具体例）

其次，说明本发明的第 7 具体例。

图 8 是示意性地表示本发明的发光器件的第 7 具体例的剖面图。在该图中，对于与关于图 1 至图 7 已叙述的同样的要素也附以同一符号，省略详细的说明。

本实施例的发光器件 1G 具有与第 6 具体例的发光器件 1F 类似的结构。即，发光器件 1G 也在第 1 引线 101 的前端具有杯状部分 601，在其底部安装了发光元件 106。而且，将导线 109 从发光元件 106 连接到引线 102 上。再者，设置了密封体 111，使其包围这些部分。

但是，在本具体例中，将密封体 111 形成得较小，将透光体 713 设置成包围该密封体 111。

通过将密封体 111 形成得较小，可减小发光部分，提高亮度。而且，透光体 713 的上表面具有透镜状的聚光作用，也可取出收敛光。

此外，通过利用透光体 713 来包围密封体 111，可进一步提高对于湿气或腐蚀性气氛的耐久性。可使用树脂作为透光体 713 的材料。

EX1003, Page 550

如果使用硅酮树脂，则与密封体 111 的密接性也变得良好，可得到良好的耐气候性和机械强度。

再有，本具体例也不限定于图示了的具体例。例如，如图 9 中例示的那样，也可将密封体 111 限定于杯状部分 601 上。如果这样做，则有进一步减小发光部分、亮度上升的情况。此时，导线 109 贯通密封体 111 与透光体 713 的界面，但如果使密封体 111 的材料与透光体 713 的材料类似，则也可抑制在界面上的应力、防止断线。

以上，一边参照具体例，一边说明了本发明的实施例。但是，不限定于本发明的这些具体例。即，将本发明应用于具有用树脂密封了半导体发光元件的结构的全部的发光器件都可得到同样的效果。

例如，如果将使光散射的发散剂分散在由硅酮树脂构成的密封体 111 中，则可得到光的发散效果。

此外，关于发光元件的具体的结构或材料、引线或密封体 111 的形状、各要素的尺寸关系等，从业者可适当地进行设计变更，这些也包含在本发明的范围内。

图1

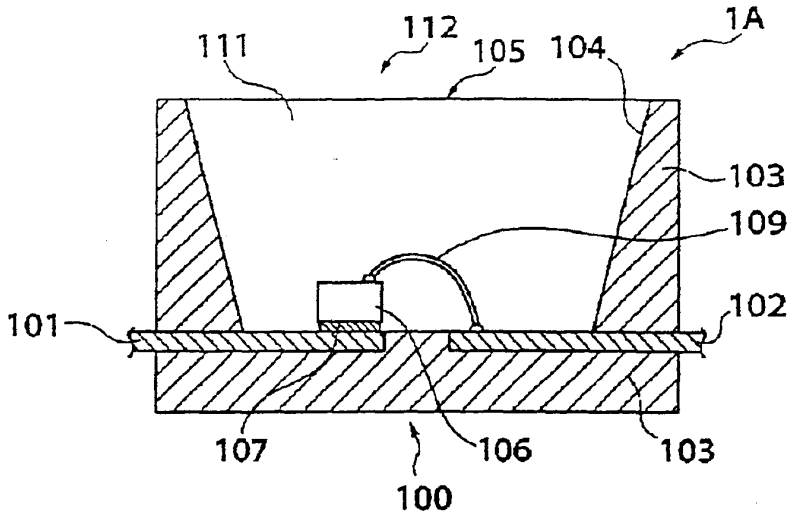
111
112
105
104
1A
103
109
101
102
107
106
103
100

图2

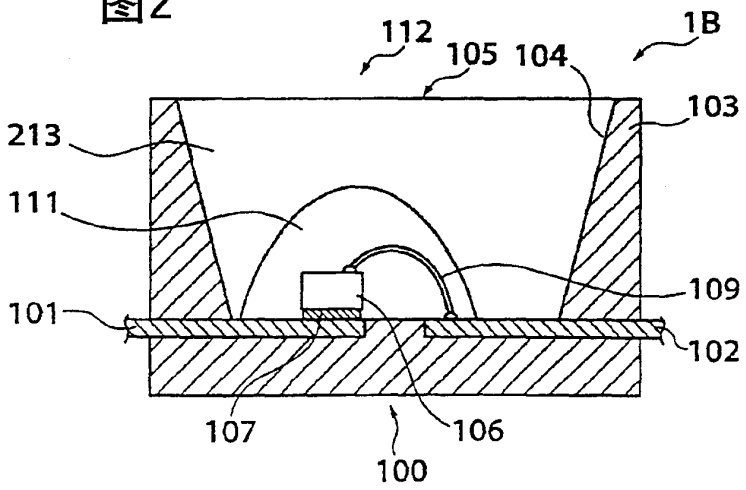
112
105
104
1B
103
213
111
109
101
102
107
106
100

图3

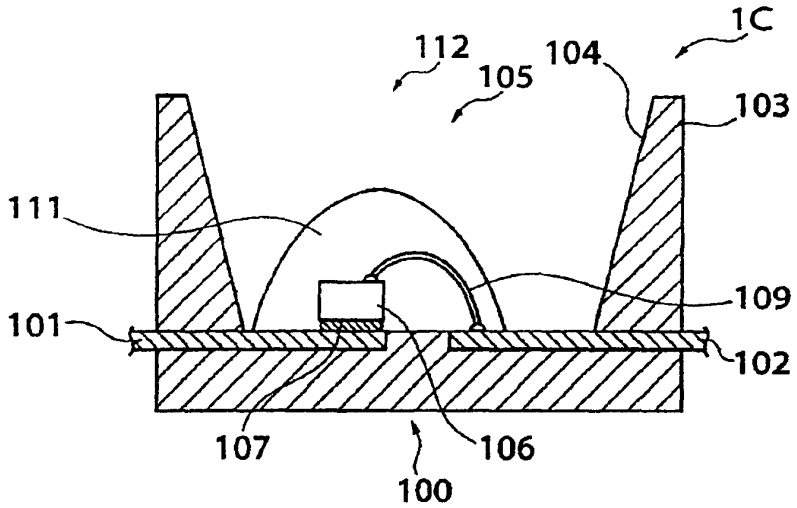
1C
112
105
104
103
111
109
101
102
107
106
100

图4

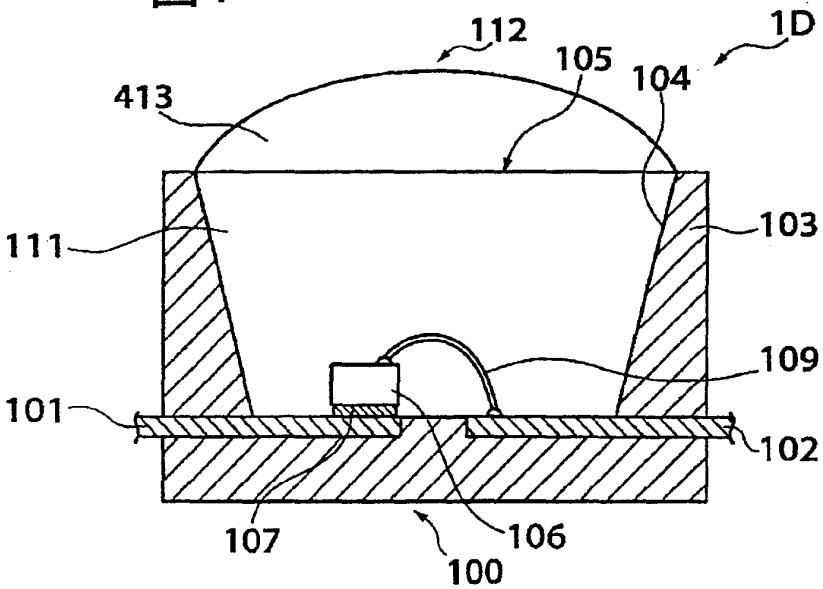
112
1D
105
104
413
111
103
109
101
102
107
106
100

图5

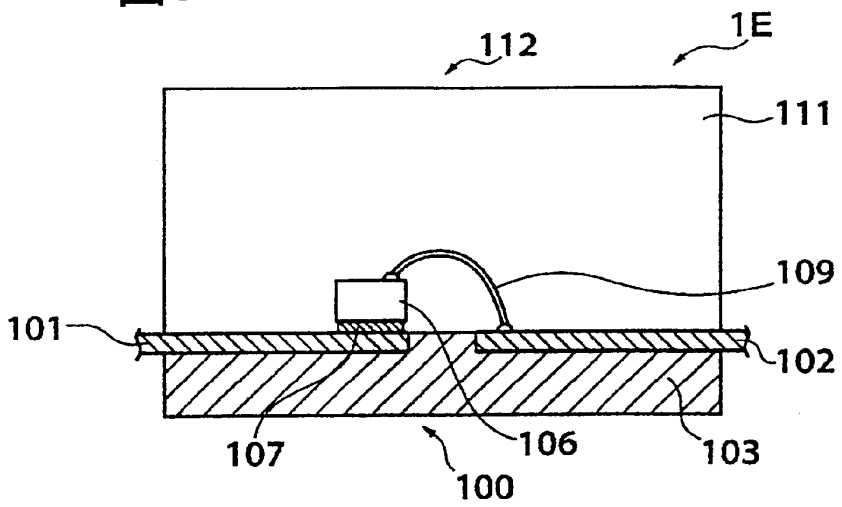
112
1E
111
109
101
102
107
106
103
100

图6

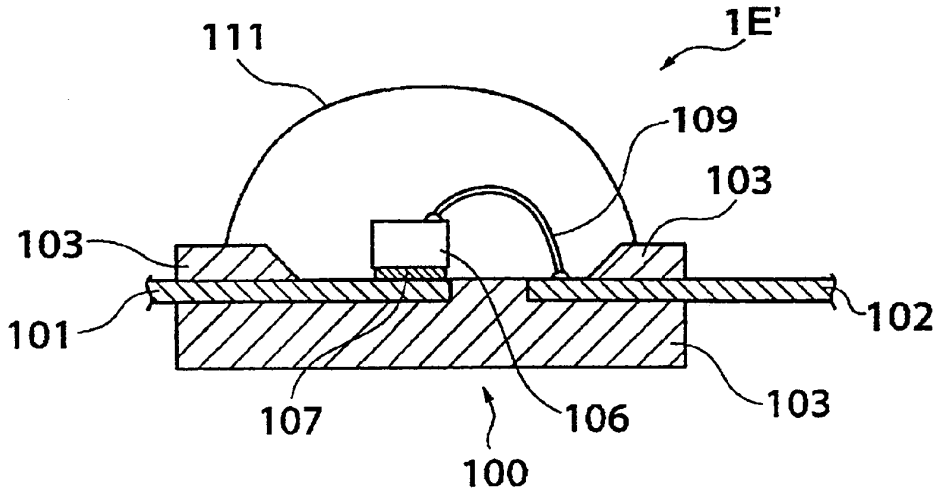
111
1E'
109
103
103
101
102
107
106
103
100

图7

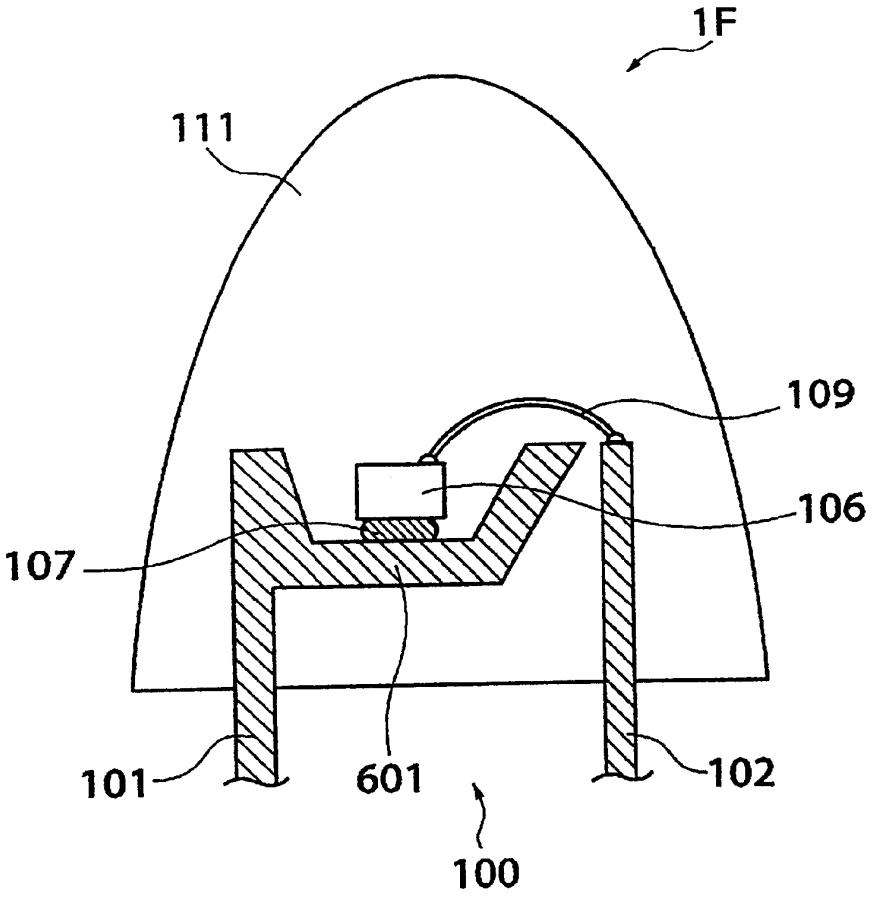

图8

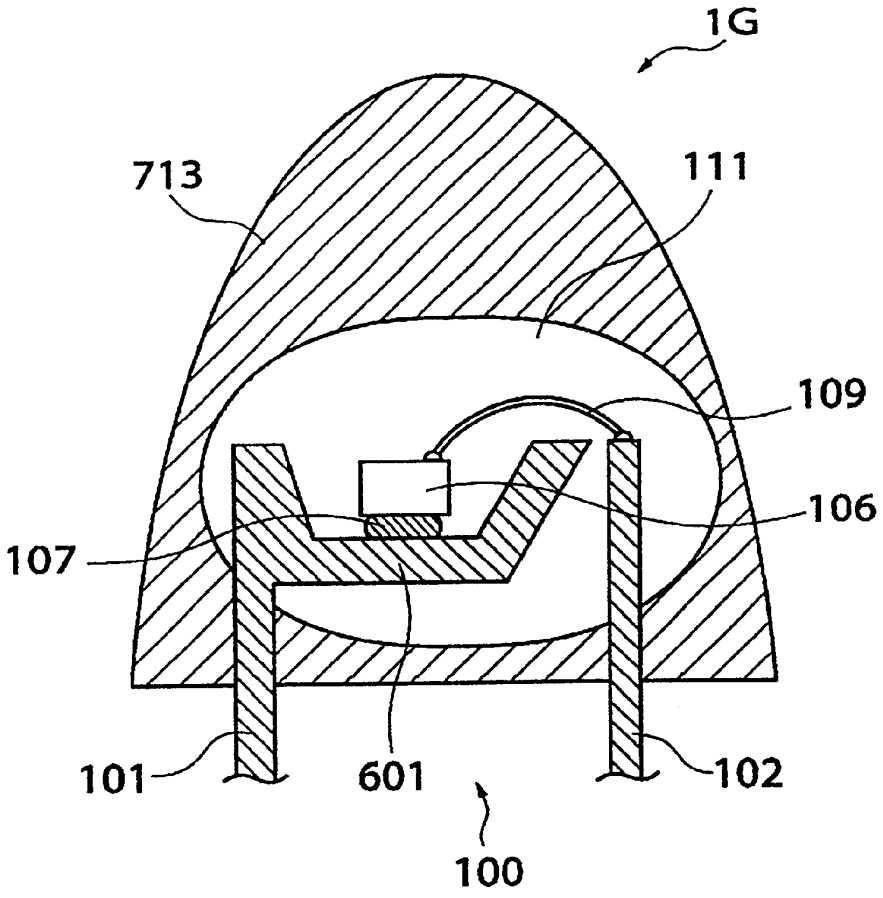

图 9

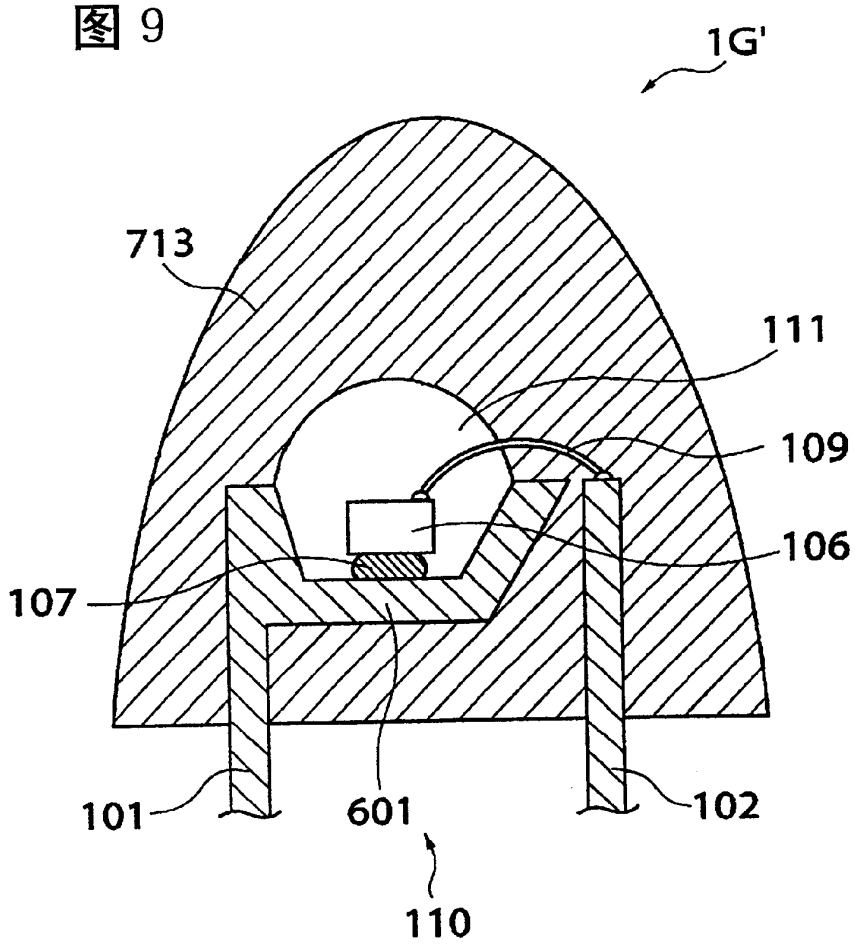

图10

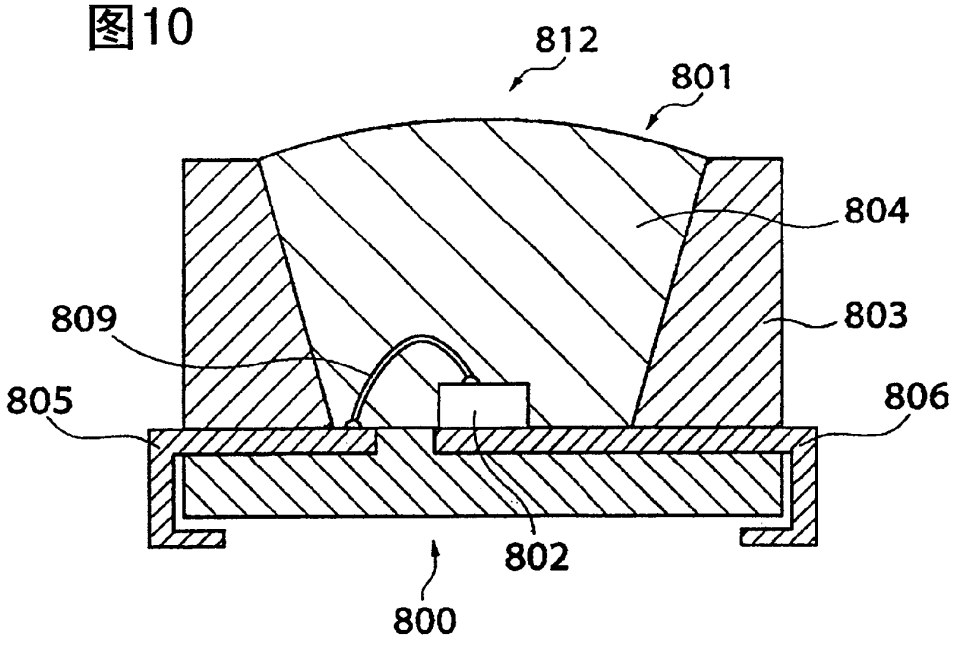
812
801
804
809
803
805
806
802
800

图11

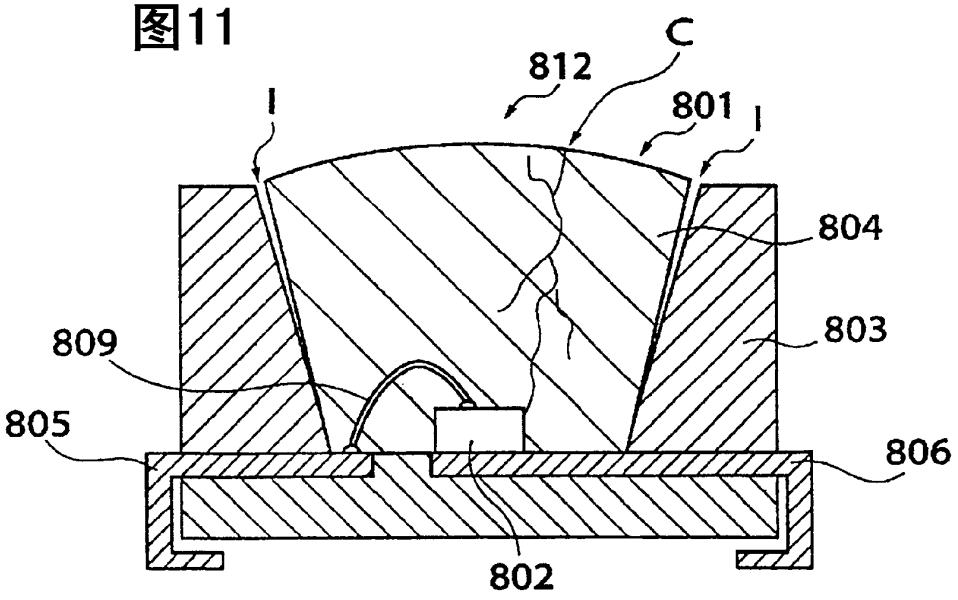
C
812
I
801
I
804
809
803
805
806
802

LICHTEMITTIERENDE FESTKOERPEREINRICHTUNG

Publication number: DE2309586 (A1)
Publication date: 1973-08-30
Inventor(s): KOSMAN KAREL J W; BOIVIN LOUIS P +
Applicant(s): NORTHERN ELECTRIC CO +
Classification:
- international: ***H01L33/00; H05B33/04; H05B33/20; H05B33/22;*** *F21K7/00;* **H01L33/00; H05B33/04; H05B33/12; H05B33/22;** F21K7/00; (IPC1-7): H05B33/16
- European: H05B33/22; H01L33/54; H01L33/60; H05B33/04; H05B33/20
Application number: DE19732309586 19730226
Priority number(s): US19720229140 19720224

Also published as:
JP48100083 (A)

Abstract not available for **DE 2309586 (A1)**

Data supplied from the ***espacenet*** database — Worldwide

(51) Int. Cl.: H 05 b, 33/16

BUNDESREPUBLIK DEUTSCHLAND

DEUTSCHES PATENTAMT

(52) Deutsche Kl.: 21 f, 89/03

(10) (11) Offenlegungsschrift 2309 586

(21) Aktenzeichen: P 23 09 586.5

(22) Anmeldetag: 26. Februar 1973

(43) Offenlegungstag: 30. August 1973

Ausstellungspriorität: —

(30) Unionspriorität

(32) Datum: 24. Februar 1972

(33) Land: V. St. v. Amerika

(31) Aktenzeichen: 229140

(54) Bezeichnung: Lichtemittierende Festkörpereinrichtung

(61) Zusatz zu: —

(62) Ausscheidung aus: —

(71) Anmelder: Northern Electric Co., Ltd. Montreal, Quebec (Kanada)

Vertreter gem. § 16 PatG: Lorenz, E.; Seidler, B.; Seidler, M.; Witt, L., Dr.; Gossel, H. K., Dipl.-Ing.; Pohl, K. P.; Rechtanwalt, 8000 München

(72) Als Erfinder benannt: Kosman, Karel J. W.; Boivin, Louis P.; Ottawa

DT 2309586

© 8.73 309 835/1021 11/70

2309586

29.762/ki

Northern Electric Company Limited, Montreal, Que.,Canada

Lichtemittierende Festkörpereinrichtung.

Die Erfindung betrifft eine lichtemittierende Festkörpereinrichtung, insbesondere die Umschließung derartiger Einrichtungen.

In lichtemittierenden Festkörpereinrichtungen wird durch Sperrschichtlumineszenz elektrische Energie direkt in Schmalbandstrahlung im sichtbaren oder Infrarotbereich umgewandelt. Derartige Einrichtungen haben gegenüber überlichen Lichtquellen verschiedene Vorteile, beispielsweise eine lange Lebensdauer, mechanische Robustheit, hohe Zuverlässigkeit, niedrige Betriebsspannung, geringer Leistungsverbrauch, kleines Volumen, geringes Gewicht und niedrige Betriebstemperatur.

Als lichtemittierende Festkörpereinrichtungen oder Festkörper-Lampen werden gewöhnlich pn-Halbleiter-Flächendioden verwendet, die durch Elektrolumineszenz Licht emittieren, wobei das Licht im Bereich der pn-Sperrschicht erzeugt wird, an der eine Durchlaß-Vorspannung liegt. Dabei kann eine unsichtbare Strahlung, gewöhnlich im Infrarothereich, oder Licht im sichtbaren Spektrum erzeugt werden.

Je nach der Art des Halbleiters und seiner geometischen Ausbildung wird das Licht in verschiedenen Richtungen abge-

strahl oder emittiert. Da das Licht durch ein Umschließungsmaterial tritt, juß dieses geeignete Eigenschaften haben. Festkörperlampen werden in Leuchttasten und als Signallampen verwendet. Dabei ist das Halbleiterelement viel kleiner als es vom Gesichtspunkt der Benutzung durch Menschen erwünscht wäre. Dies ist auf verschiedene Gründe zurückzuführen, von denen einer die in der pn-Sperrschicht erforderliche, hohe Stromdichte und der andere die relativ hohen Kosten des Halbleitermaterials ist. Beispielsweise hält man eine Leuchttaste mit einem Durchmesser von etwa 2,5 mm für zweckmäßig. Dagegen erhält man eine Lampe mit optimalem Wirkungsgrad mit einer pn-Sperrschicht mit einer Fläche von $(o,38\ mm)^2$.

Es ist bekannt, über dem Element eine Lupe anzuordnen, damit das Element größer erscheint, doch wird dadurch der Betrachtungswinkelbereich stark verkleinert. Beispielsweise kann bei einer Lupe, mit der das Bild genügend vergrößert wird, der Betrachungswinkelbereich nur etwa $\pm 5^o$ betragen. Auch durch Verwendung eines Reflektors kann man die Lampe größer erscheischeinen lassen und auch den Gesamtwirkungsgrad erhöhen. Ein Reflektor bedingt jedoch ebenfalls eine Begrenzung des Betrachtungswinkelbereichs. Wenn man ihn von der Seite betrachtet, sieht man nur einen Teil des Bildes. Dieser Effekt ist als Sektorenbildung bekannt.

Durch die Verwendung einer mattgeschliffenen Lupe oder einer Lupe mit einer innen angeordneten Diffusionsschicht kann man zwar den Betrachtungswinkelbereich vergrößern, doch wird dadurch die Helligkeit herabgesetzt. Durch die Verwendung einer mattgeschliffenen oder mit einer Diffusionsschicht versehenen Lupe kann man die Helligkeit beispielsweise von 16 146 Lux auf 124 Lux herabsetzen.

Die Erfindung schafft eine lichtemittierende Festkörper-

EX1003, Page 562

einrichtung, die eine Umschließung und einen mit der Umschliessung einstückigen Reflektor besitzt und ein Bild von einer gewünschten Größe erzeugt, das helle Stellen aufweist und ohne beträchtliche Sektorenbildung innerhalb eines Betrachungswinkelbereichs von beispielsweise $\pm 45^{\circ}$ sichtbar ist. Die Einrichtung ist in der Umschließung festgelegt und dicht eingeschlossen und besitzt eine Fläche, die eine vorherbestimmte Ausbildung hat und auf welcher der größte Teil des emittierten Lichts konzentriert wird. Diese Konstruktion gestattet ferner die Verwendung eines optischen Filters, der den Kontrast steigert.

Somit besitzt die lichtemittierende Festkörpereinrichtung gemäß der Erfindung einen Parabolreflektor, ein im Brennpunkt des Parabolreflektors engeordnetes Elektrolumineszenzelement und eine aus durchsichtigem Isoliermaterial bestehende Umschließung, die das Elektrolumineszenzelement umgibt und eine Vorderfläche besitzt, durch die das Licht austritt und auf der ein Linsenraster zum Zerstreuen des Lichts ausgebildet ist.

Der Linsenraster besitzt mehrere konvexe oder konkave Elemente, die eine oder mehrere Reihen bilden, welche dieselbe oder im wesentlichen dieselbe Form haben. Die konvexen oder konkaven Elemente sich so dicht beieinander angeordnet, daß das sichtbare Bild der Einrichtung die gewünschte Form besitzt, und von ihnen wird der größte Teil des emittierten Lichts abgegeben. Das sichtbare Bild der Einrichtung besteht aus mehreren Lichtpunkten, welche die Bildfläche ausfüllen, welche die gewünschte Form hat. Innerhalb des gewünschten Betrachtungswinkelbereichs bleiben die Helligkeit und das Aussehen der Lichtpunkte annähernd unverändert. Durch kleinere Abänderungen in der Form der konvexen oder konkaven Elemente kann man die Lumineszenzeigenschaften der Einrichtung beeinflussen. Insbesondere kann man durch eine geeignete Abänderung den Betrachtungswinkelbereich auf Kosten des Wirkungsgrades der Einrichtung vergrößern.

Nachstehend werden Ausführungsbeispiele der Erfindung anhand der beigefügten schematischen Zeichnungen beschrieben.

In diesen zeigt:

Fig. 1 in einem Querschnitt längs der Linie 1-1 in Fig.2 eine rechteckige Einrichtung.

Fig. 2 in einer Draufsicht die Einrichtung nach Fig. 1.

Fig. 3 in einer Seitenansicht, teilweise geschnitten, eine andere Ausführungsform der Einrichtung.

Fig. 4 in einer Draufsicht die Einrichtung gemäß Fig. 3.

Fig. 5 im Querschnitt längs der Linie 5-5 in Fig. 6 eine erfindungsgemäß ausgebildete Leuchttaste.

Fig. 6 in einer Draufsicht die Leuchttaste gemäß Fig. 5.

Fig. 7 in einem Querschnitt längs der Linie 7-7 in Fig. 8 eine andere Ausführungsform der Einrichtung.

Fig. 8 in Draufsicht die Einrichtung gemäß Fig. 7.

Fig. 9 eine Abänderung der Einrichtung gemäß Fig. 1 und 2.

Fig.10 im Querschnitt eine Einrichtung mit anders ausgebildeten konkaven Elementen.

Fig.11 in größerem Maßstab im Querschnitt ein konkaves Element gemäß Fig. 10.

Fig.12 im Querschnitt eine andere Ausführungsform der Einrichtung mit einem in dem Umschließungsmaterial angeordneten Innenreflektor und

Fig.13 in größerem Maßstab im Querschnitt, einen Teil des Linsenrasters der Einrichtung gemäß Fig. 12.

In den Figuren 1 und 2 ist schematisch und in vereinfachter Form eine Ausführungsform der Erfindung in Form einer Feststoff-Lampe dargestellt. Die Lampe ist in Draufsicht rechteckig und besitzt ein aktives Halbleiterelement 1 mit einem pn-Übergang 2, der sichtbares Licht emittieren kann, beispielsweise GaP:Zn,O, und elektrische Leiter 3. Diese Teile sind in einer Kapsel 4 aus durchsichtigem Kunststoff eingeschmolzen. Die Kapsel 4 besteht aus einem glasklaren oder farbigen, durchsichtigen duroplastischen Kunstharz, das im flüssigen Zustand im Preßspritzverfahren verformt werden kann, z.B. aus einem Epoxid-, Silikon-, Polyester- oder Diallylphthalatharz. Bei einem Halberleiter aus GaP:Zn,O kann die Kapsel beispielsweise rot sein. Die Kapsel umschließt die ganze Lampe und ist auf ihrer Vorderfläche 5 mit einem Linsenraster ausgebildet.

Die Lampe ist ferner einstückig mit einem Parabolreflektor 6 ausgebildet. Dieser empfängt Licht von dem Halbleiterelement 1 und gibt kollimiertes Licht zu der Vorderfläche 5 hin ab. Der Reflektor 6 besteht im wesentlichen aus einem parabolischen Zylinder, und die Kapsel erhält bei ihrer Verformung die gewünschte Form. Nach dem Verformen wird die parabolische Fläche beispielsweise Vakuum mit Aluminium metallisiert, wobei vor dem Metallisieren eine geeignete Grundierung und nach dem Metallisieren ein Schutzüberzug aufgetragen wird.

Man erkennt, daß die Vorderfläche 5 mit einem Linsenraster 4 ausgebildet ist, der aus nebeneinander angeordneten, konkaven Elementen 7 besteht. Diese konkaven Elemente 7 verteilen das emittierte Licht in der Ebene der Fig. 1 entsprechend dem geforderten Betrachtungswinkelbereich, wobei das Licht an der Grenzfläche zwischen dem Umschließungsmaterial und der Umgebungsluft durch Lichtbrechung abgetastet wird. Ein von dem Halbleiterelement 1 abgegebener Lichtstrahl 8 wird zuerst von dem Reflektor 6 kollimiert und dann von dem konkaven Flächen-

EX1003, Page 565

element gebrochen, das als eine Zerstreuungslinse wirkt, die ein virtuelles Bild erzeugt, das in dem geforderten Winkelbereich sichtbar ist.

Da alle lichtreflektierenden und -brechenden Elemente mit der Kapsel einstückig sind, arbeitet die Einrichtung mit optimalem Wirkungsgrad und kann sie auf einfache Weise hergestellt werden. Ferner wird das Aussehen der Lampe verbessert, ohne daß die Herstellungskosten beträchtlich erhöht werden.

Anstatt auf einer Fläche der Kapsel kann der Reflektor auch getrennt hergestellt, relativ zu dem Halbleiterelement festgelegt und dann eingekapselt werden. Eine derartige Anordnung ist in den Figuren 3 und 4 dargestellt, die auch eine andere Ausführungsform der fertigen Lampe zeigen. Die Lampe gemäß den Figuren 3 und 4 ist besonders als Signallampe in einem Fernsprechapparat geeignet und aus jeder Richtung bis zu einem Winkel von 45° von der Normalen sichtbar.

In diesem Ausführungsbeispiel ist das einen pn-Übergang 2 besitzende Halbleiterelement 1 direkt auf einem Reflektor 10 montiert. Dieser ist mit der Leiteranordnung der Lampe einstückig und besitzt einen kleinen Sockel 11, an dem das Halbleiterelement am Brennpunkt des Reflektors montiert ist. Der Sockel 10 ist so ausgebildet, daß der Reflektor kein Licht auf den mittleren Teil der Vorderfläche 12 reflektiert, weil dieser Teil bereits direkt von der oberen Fläche der Halbleitereinrichtung 1 aus beleuchtet wird. Der Reflektor steht mit der einen Seite des Überganges 2 in dem Halbleiterelement 1 und mit der Minusleitung 13 im elektrischen Kontakt.

Die Lampe ist von einer Kapsel 14 umschlossen und auf ihrer Vorderfläche 12 mit mehreren konkaven Elementen 15 ausgebildet. Da die Lampe kreisförmig ist, hat der Reflektor nicht die Form eines parabolischen Zylinders, sondern eines Paraboloids. Die konkaven Elemente 15 sind kalottenförmig.

In dem vorliegenden Ausführungsbeispiel ist eine zentrale Hohlkalotte von einem Kranz von sechs Hohlkalotten umgeben.

Ein Draht 16 verbindet die andere Seite des Überganges 2 des Halbleiterelements 1 mit dem Plusleiter 17. Wenn das Halbleiterelement 1 festgelegt und mit den Leitern verbunden worden ist, wird die Lampe eingekapselt. Zu diesem Zweck wird die Lampe in einer Spritzpreßform festgelegt. Ein Leitergestell kann mit zahlreichen Lampen versehen werden, die alle gleichzeitig eingekapselt werden. Die Kapseln werden vorzugsweise mit abwärtsgekehrter Vorderfläche 12 hergestellt, so daß etwaige Fehler nur im hinteren Teil auftreten.

Die Abmessungen des konkaven Elements 15 sind so gewählt, daß die Forderungen hinsichtlich der Sichtbarkeit erfüllt werden. Beispielsweise kann jedes konkave Element 15 einen Durchmesser von 1,14 mm und die Lampe einen Außendurchmesser von etwa 5,1 mm haben; die Abstände zwischen den von den einzelnen konkaven Elementen gebildeten Lichtpunkten können so groß sein, daß die Lichtpunkte aus 2 m Abstand noch einzeln sichtbar sind, und der Gesamtdurchmesser des sichtbaren Bildes kann etwa 25 mm betragen. Der Krümmungsradius der konkaven Elemente kann so gewählt sein, daß ein Betrachtungswinkelbereich von etwa $\pm 45^{\circ}$, auf die Achse der Einrichtung bezogen, erhalten wird.

Die Kapseldecke besitzt eine schräge Umfangsrandfläche 18, die bewirkt, daß ein kleiner Teil des Lichts unter einem Winkel von etwa 90° relativ zu der vertikalen Achse der Lampe austritt. Eine derartige Umfangsrandfläche ist in bestimmten Anwendungsfällen vorteilhaft, beispielsweise in dem in den Figuren 5 und 6 gezeigten Fall.

In den Figuren 5 und 6 ist eine Drucktaste 20 eines Tastwahl-Fernsprechapparats gezeigt. In einer Vertiefung 21 dieser

EX1003, Page 567

Drucktaste sind zwei Lampen 22 gemäß den Figuren 3 und 4 angeordnet. Der Oberteil der Drucktaste ist von einem kontraststeigernden Filter 23 ausgefüllt, beispielsweise dem kreisförmigen roten Polarisationsfilter Polaroid HRCP7.
Die Lampen 22 sind so angeordnet, daß sie diesem Filter direkt zugekehrt sind. Verbindungen zu den Lampen werden über Leiter 24 hergestellt.

In diesem Ausführungsbeispiel dient jede Lampe zur Abgabe von bestimmten Informationen. Die Bedienungsperson oder der Benutzer des Apparats soll auch im Dunkeln leicht erkennen können, welche Lampe leuchtet. Zu diesem Zweck ist ein Bezugsrahmen vorgesehen, indem der obere Umfangsrand der Vertiefung 21 von einer einwärtsgeneigten Kegelfläche 25 umgeben ist. Das von der Lampe horizontal durch die in Fig. 3 gezeigten kegeligen Fläche hindurch abgegebene Licht wird über die Fläche 25 zerstreut, so daß der Umriß der Drucktaste sichtbar wird.

In der in den Figuren 7 und 8 dargestellten Ausführungsform ist der Linsenraster auf der Vorderfläche anders ausgebildet. Das Halbleiterelement 1 ist am Brennpunkt des Reflektors 6 montiert, der in der anhand der Fig. 1 beschriebenen Weise auf die Kapsel 4 aufgedampt worden ist. Es ist ein pn-Übergang 2 vorhanden. Leiter 3 stellen eine Verbindung zu einer Stromquelle her. Die Vorderfläche 5 ist mit einer zentralen konischen Vertiefung 30 ausgebildet, die von einer Reihe von konzentrischen Kränzen von konkaven Elementen 31 umgeben ist.

Die Anordnung gemäß den Figuren 7 und 8 ermöglicht eine Vergrößerung der wirksamen Größe der Lampe. Der der zentralen konischen Vertiefung 3o gegenüberliegende Winkel ist so gewählt, daß die Vertiefung das Licht reflektiert, das auf sie von dem Halbleiterelement 1 fällt, insbesondere von dessen oberer Fläche. Von den Seitenwandungen der konischen Vertiefung 30 wird das Licht auswärts zu dem Reflektor 6 hin reflektiert, der es zu den Vertiefungen 31 hin reflektiert. Infolge dieses von den

Vertiefungen 31 zusätzlich reflektierten Lichts kann ohne Einbuße an Helligkeit der Durchmesser der von den Vertiefungen gebildeten Kränze größer gewählt werden als beispielsweise in der Anordnung gemäß Fig. 4. Das auf der Vorderfläche sichtbare Bild hat in der Mitte einen dunklen Bereich, der dem Durchmesser der Vertiefung entspricht. Man kann die Größe bzw. den Durchmesser der Vertiefung 30 so wählen, daß die Lampe die gewünschte Größe hat. Wenn man den Durchmesser der Vertiefung soweit vergrößert, daß sie alles auf die einfallende Licht reflektiert, kann man eine größere Lampe ohne beträchtliche Helligkeitseinbuße herstellen. Bei einer weiteren Vergrößerung wird die Helligkeit vermindert.

Fig. 9 zeigt eine Abänderung der Ausführungsform gemäß Fig. 1. Anstelle der in Fig. 1 gezeigten konkaven Elemente sind hier auf der Vorderfläche 5 mehrere konvexe Elemente 35 vorgesehen, die einen Linsenraster bilden und ähnlich wie die konkaven Elemente 9 der Figuren 1 und 2 das die Vorderfläche 5 erreichende Licht brechen.

Wie vorstehend erwähnt wurde, kann man durch kleine Veränderungen der Form der konkaven Elemente oder Linsen die Lumineszenzeigenschaften einer Lampe verändern. In den vorstehend beschriebenen Beispielen sind die konkaven Elemente kalottenförmig. Eine Abänderung besteht darin, daß nur der innere Teil jeder Linse oder jedes konkaven Elements sphärisch gekrümmt, der äußere Teil dagegen konisch ist. Dadurch kann man die Lichtstärke der Lampe in einem Betrachtungswinkelbereich von 2o-4o° erhöhen.

Fig. 10 zeigt eine Lampe, die der in den Figuren 3 und 4 dargestellten sehr ähnlich ist, wobei der Unterschied die Form der konkaven Elemente 15 in den Figuren 3 und 4 betrifft. In dem Ausführungsbeispiel nach Fig. 10 ist die Vorderfläche 12 mit mehreren konkaven Elementen 40 ausgebildet, die etwas tiefer sind als die konkaven Elemente 15 der Figuren 3 und 4.

Die Form der konkaven Elemente 40 geht aus der Fig. 11 deutlicher hervor. Man erkennt, daß das konkave Element einen sphärisch gekrümmten inneren Teil 41 und einen konischen äußeren Teil 42 besitzt und diese beiden Teile bei 43 glatt ineinander übergehen. Die Form des in Fig. 3 gezeigten konkaven Elements ist zum Vergleich durch die strichpunktierte Linie 44 angedeutet. Diese abgeänderte Form führt zu einer größeren Lichtstärke der Lampe unter Betrachtungswinkeln zwischen etwa 20° und 40°. Sie stellt ein Beispiel dafür dar, wie die Form der konkaven Elemente abgeändert werden kann, um die Lichtstärke der Lampe verschiedenen Forderungen anzupassen.

Wenn man den Betrachtungswinkelbereich verbessern will, muß man Einbußen hinsichtlich des Wirkungsgrades beispielsweise eine Sektorenbildung und/oder einen höheren Strombedarf, in Kauf nehmen. Fig. 12 zeigt im Querschnitt eine Lampe, die praktisch unter Winkeln von-90° bis +90° sichtbar ist. Man erkennt, daß in dieser Lampe die Vorderfläche bzw. der Vorderteil abgeändert worden ist. Das Halbleiterelement 1 der Lampe besitzt einen pn-Übergang 2 und ist mit Hilfe des Sockels 11 an dem Reflektor 10 montiert und von der Kapsel 14 umschlossen. In dem vorliegenden Ausführungsbeispiel ist anstelle des relativ dünnen, flachen Vorderteils der vorhergehenden Ausführungsformen, beispielsweise gemäß Fig. 3, ein dickerer Vorderteil 50 vorgesehen, der eine gekrümmte Vorderfläche 51 hat. In dem Vorderteil 50 bildet eine zentrale Vertiefung 53 einen Innenreflektor 52, In der Vorderfläche 51 sind mehrere linsenbildende Vertiefungen 54 ausgebildet, die in dem vorliegenden Ausführungsbeispiel die Form von den Innenreflektor 52 umgebenden Ringen haben.

Der zentral angeordnete Innenreflektor 52 besteht aus drei konischen Teilen 55, 56 und 57. Diese und die linsenbildenden Vertiefungen gehen aus der Fig. 13 deutlicher hervor. Der Reflektor 10 reflektiert das von dem Element 1 emittierte Licht zu dem Innenreflektor 52 hin. Der Innenreflektor 52 reflektiert

das Licht auswärts durch den von den Vertiefungen 54 gebildeten Linsenraster und auch durch den übrigen Teil der Vorderfläche 51. Typische Strahlengänge für das von dem Reflektor 10 kommende Licht sind durch die strichpunktierten Linien 58 angedeutet. Etwas Licht tritt auch aufwärts durch die ebene Bodenfläche 59 des Vorderteils 50.

Wie vorstehend erwähnt wurde, müssen bei einer Vergrößerung des Betrachtungswinkelbereichs, in dem vorliegenden Fall auf etwa 180°, einige Verluste in Kauf genommen werden. Der Strombedarf ist höher, weil ein größerer Raumwinkel ausgeleuchtet werden muß. Man kann auch das optimale Kontratfilter nicht verwenden. Bei Betrachtung der Lampe unter kleinen Betrachtungswinkeln, z.B. von der Seite, tritt eine gewisse Sektorenbildung auf.

Zweckmäßige wird die Lampe in eine halbkugelige Schale 50 eingesetzt, welche die Lampe insbesondere deren zentrale Vertiefung 53, vor Beschädigung und Schmutz schützt. Die Schale 60 kann aus farbigem durchsichtigem Kunststoff bestehen, so daß sie ein Spektralfilter darstellt.

Bei Verwendung eines Halbleiterelements 1, das Licht im unsichtbaren Bereich, beispielsweise Infrarot-Bereich, emittiert, kann man einen geeigneten Phosphor verwenden, der die Infrarotstrahlung in sichtbares Licht umwandelt. Man kann einen Überzug aus diesem Phosphor beispielsweise direkt auf dem Halbleiterelement oder auf einer anderen geeigneten Unterlagen vorsehen.

2309586

Patentansprüche

1. Lichtemittierende Festkörpereinrichtung mit einem Parabolreflektor, einem am Brennpunkt des Reflektors montierten Halbleiter-Elektrolumineszenzelement und einer aus durchsichtigen Isoliermaterial bestehenden Umschließung, die das Elektrolumineszenzelement umgibt und durch deren Vorderfläche das Licht austritt, dadurch gekennzeichnet, daß auf der Vorderfläche (5, 12, 51) ein Linsenraster (7, 15, 31, 35, 40, 54) zum Zerstreuen des Lichts ausgebildet ist.

2. Festkörpereinrichtung nach Anspruch 1, mit einem elektrischen Leiter, der zur Rückseite des Elektrolumineszenzelements führt, dadurch gekennzeichnet, daß der Leiter (10) nach einer parabolischen Kurve geformt ist, so daß er als der Reflektor (6) wirkt.

3. Festkörpereinrichtung nach Anspruch 1 oder 2, dadurch gekennzeichnet, daß der Linsenraster eine zur Achse der Einrichtung koaxiale, zentrale Vertiefung (15, 30) und einen die zentrale Vertiefung umgebenden Kranz von kalottenförmigen Vertiefungen (15, 31) besitzt.

4. Festkörpereinrichtung nach Anspruch 3, dadurch gekennzeichnet, daß der Krümmungsradius jeder der kalottenförmigen Vertiefungen (15, 31) etwa dem 0,8-fachen Durchmesser der Vertiefung an der Vorderfläche entspricht.

5. Festkörpereinrichtung nach Anspruch 3, dadurch gekennzeichnet, daß die zentrale Vertiefung (30) die Form eines sich einwärts zu dem Halbleiterelement (1) hin verjüngenden Kegels hat, dessen Kegelwinkel so bemessen ist, daß das von dem Halbleiterelement (1) auf die zentrale Vertiefung (30) fallende Licht auswärts zu dem Reflektor (6) hin reflektiert wird.

ORIGINAL INSPECTED

6. Festkörpereinrichtung nach einem der vorhergehenden Ansprüche, dadurch gekennzeichnet, daß die Vorderfläche (12) einen geneigten Umfangsrandteil (18) hat, der auswärtsgekehrt ist und einen Teil des Lichts unter Brechung auswärts ablenkt.

7. Festkörpereinrichtung nach einem der vorhergehenden Ansprüche, dadurch gekennzeichnet, daß die Vorderfläche (51) konvex ausgebildet und zwischen dem Elektrolumineszenzelement (1) und der Vorderfläche (51) ein Innenreflektor (52) angeordnet ist, der das Licht auswärts ablenkt, so daß es durch den Linsenraster (54) tritt.

8. Festkörpereinrichtung nach Anspruch 7, dadurch gekennzeichnet, daß der Innenreflektor (52) die Form eines Kegelstumpfes hat, dessen kleinere Endfläche (59) dem Elektrolumineszenzelement (1) benachbart ist und dessen Basis in der Vorderfläche (51) liegt, und daß der Linsenraster von mehreren die Basis des Kegelstumpfes umgebenden, ringförmigen Linsen gebildet wird.

9. Festkörpereinrichtung nach Anspruch 8, gekennzeichnet durch mehrere linsenbildende ringförmige Vertiefungen (59).

10. Festkörpereinrichtung nach Anspruch 8 oder 9, dadurch gekennzeichnet, daß der Innenreflektor (52) mehrere aufeinanderfolgende konische Teile (55, 56, 57) besitzt, wobei der dem Elektrolumineszenzelement (1) benachbarte Teil den größten und jeder darauffolgende Teil (56, 57) einen kleineren Kegelwinkel hat.

11. Festkörpereinrichtung nach Anspruch 10, dadurch gekennzeichnet, daß der Innenreflektor drei aufeinanderfolgende konische Teile (55, 56, 57) besitzt und seine kleinere Endfläche (59) zu der Achse der Festkörpereinrichtung normal ist, wobei durch diese Endfläche (59) tretendes Licht aus der Vorderfläche (51) austritt.

ORIGINAL INSPECTED

12. Lichtemittierende Festkörpereinrichtung mit einem Gehäuse, das mit einer Vertiefung ausgebildet und mit einem durchsichtigen Deckel versehen ist und in der Vertiefung mindestens eine lichterzeugende Einheit enthält, wobei jede dieser Einheiten einen Parabelreflektor aufweist, sowie ein am Brennpunkt des Reflektors montiertes Halbleiter-Elektrolumineszenzelement umgibt und durch deren Vorderfläche das Licht austritt, dadurch gekennzeichnet, daß auf der Vorderfläche (12) ein Linsenraster (15) ausgebildet ist, der zum Zerstreuen des Lichts dient und eine zentrale Vertiefung (15) und mindestens einen die zentrale Vertiefung (15) umgebenden Kranz von kalottenförmigen Vertiefungen (15) besitzt, daß die Vorderfläche (12) einen von den Vertiefungen (15) weg auswärtsgekehrten, geneigten Umfangsrandteil (18) besitzt, in dem ein Teil des Lichts durch Lichtbrechung auswärts abgelenkt wird, und daß am oberen Rand der Vertiefung (21) eine sich in der Umfangsrichtung des Gehäuses (2) erstreckende, einwärtsgeneigte Fläche (25) ausgebildet ist, die so angeordnet ist, daß der durch Lichtbrechung auswärts abgelenkte Teil des von der lichterzeugenden Einheit abgegebenen Lichts von der einwärtsgeneigten Fläche (25) in einer zur Achse dieser Einheit annähernd normalen Richtung von der lichterzeugenden Einheit (1) weg reflektiert wird, so daß dieses Licht einen die Vertiefung umgebenden Leuchtrahmen bildet.

13. Festkörpereinrichtung nach Anspruch 12, dadurch gekennzeichnet, daß sie eine Drucktaste für eine Tastatur bildet.

ORIGINAL INSPECTED

15

Leerseite

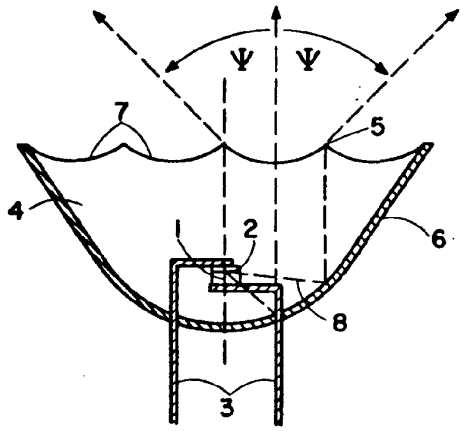

Fig. 1

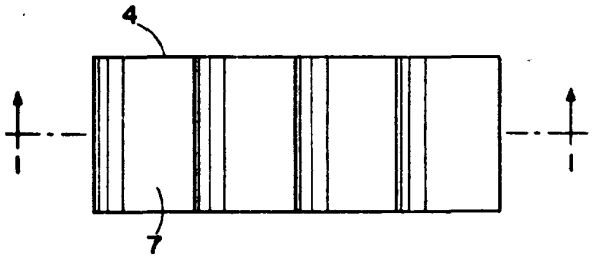

Fig. 2

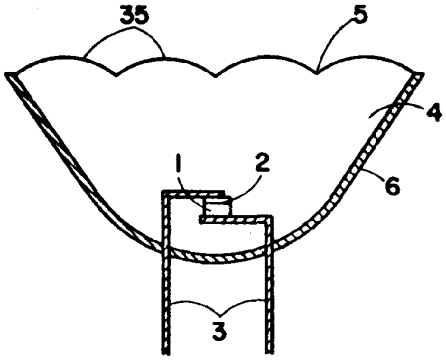

Fig. 9

309835/1021

21f 89-03 AT:26.02.73 OT:30.08.73

ORIGINAL INSPECTED

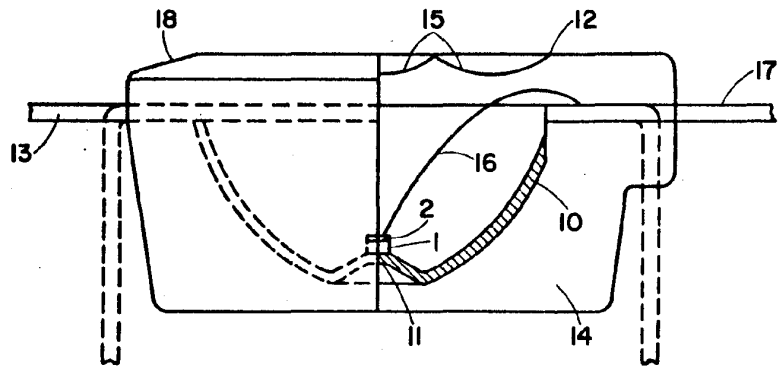

Fig. 3

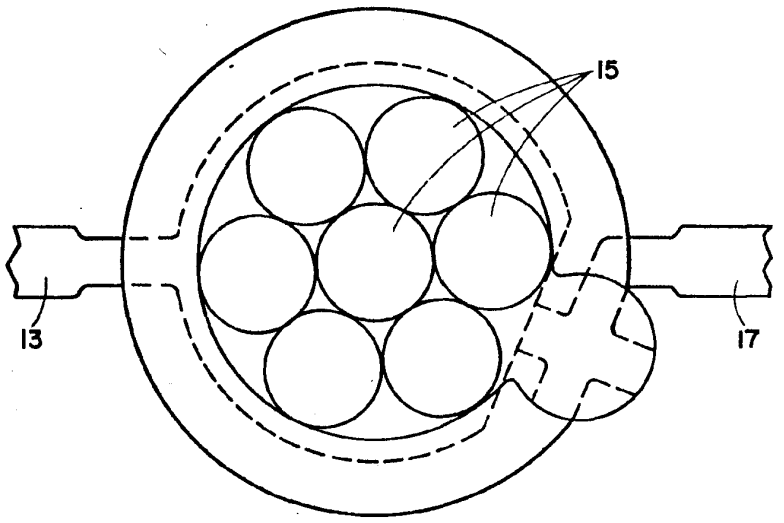

Fig. 4

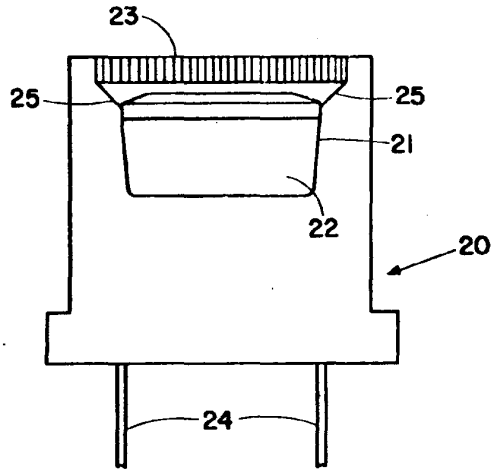

Fig. 5

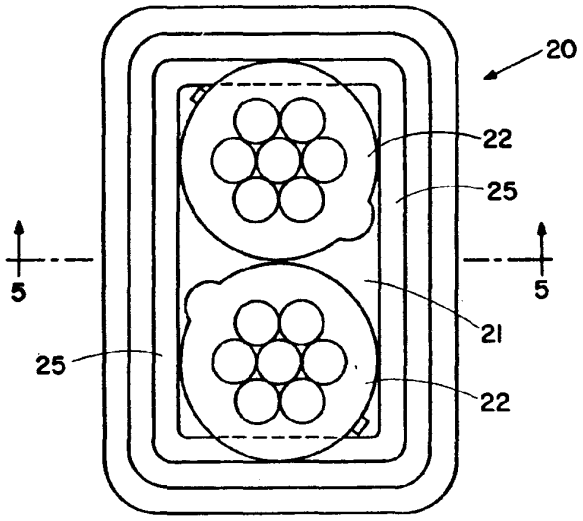

Fig. 6

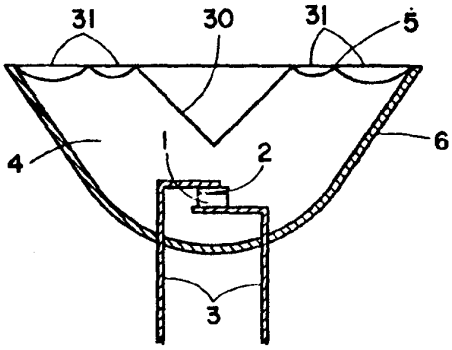

Fig. 7

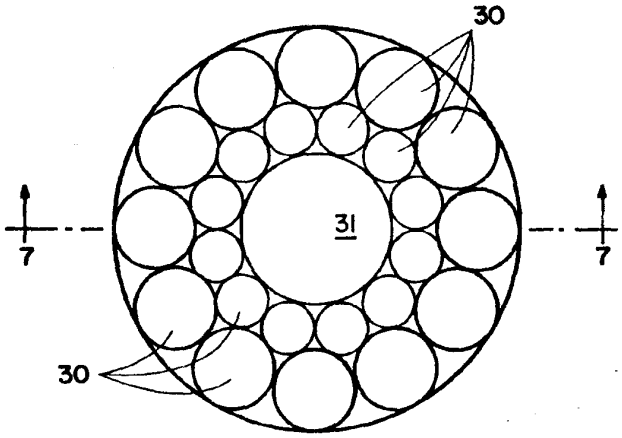

Fig. 8

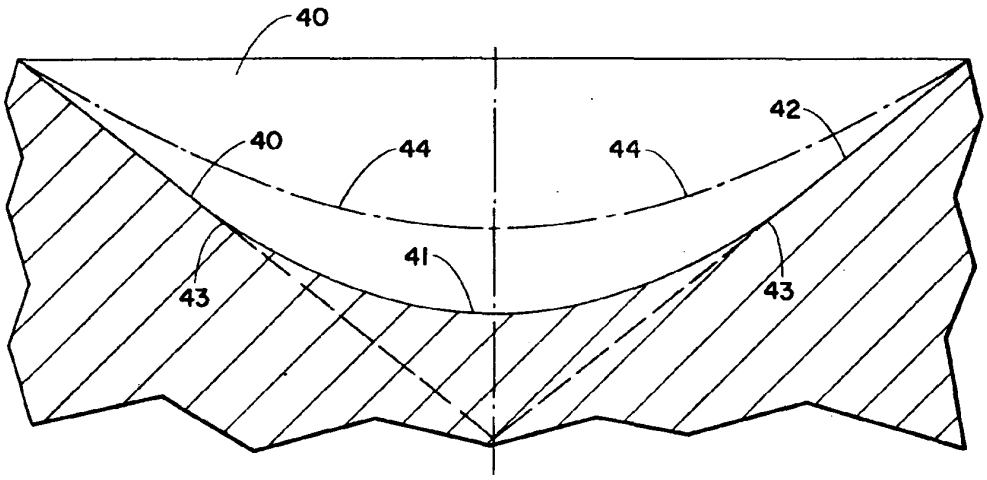

Fig. 11

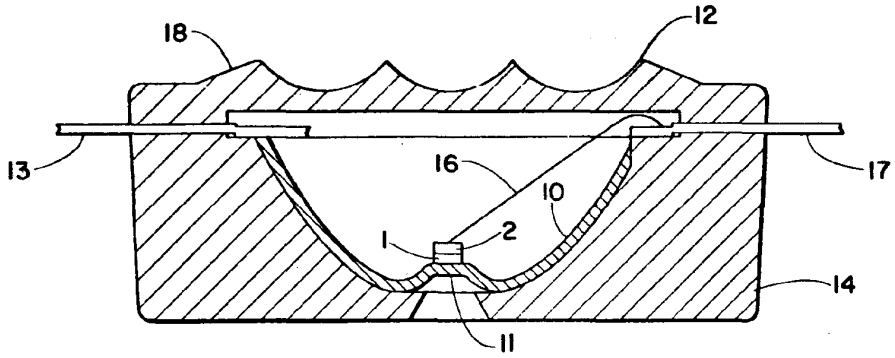

Fig. 10

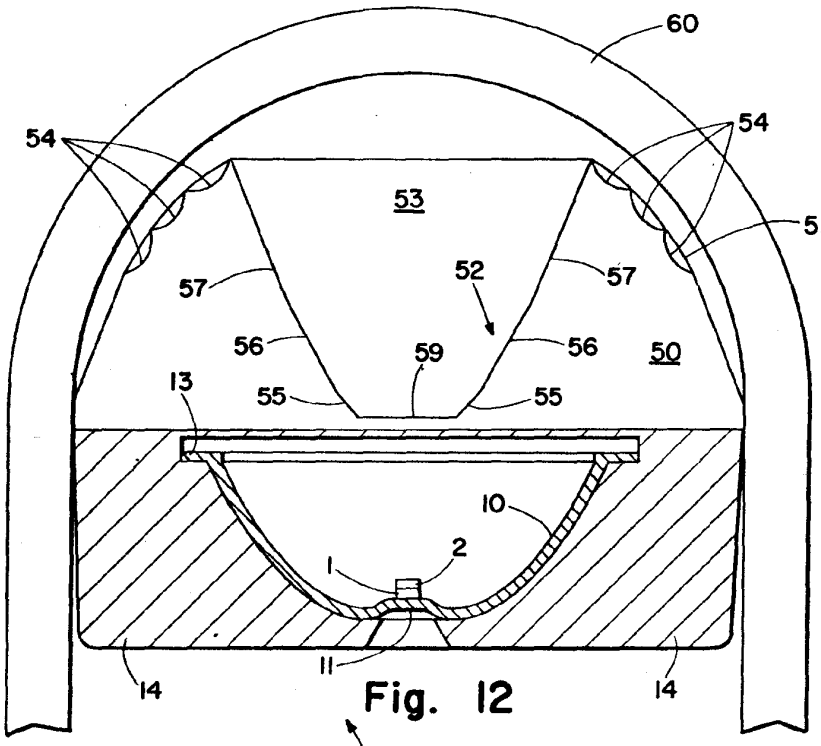
60
54
54
53
51
57
52
57
56
59
56
50
13
55
55
10
2
1
11
14
14

Fig. 12

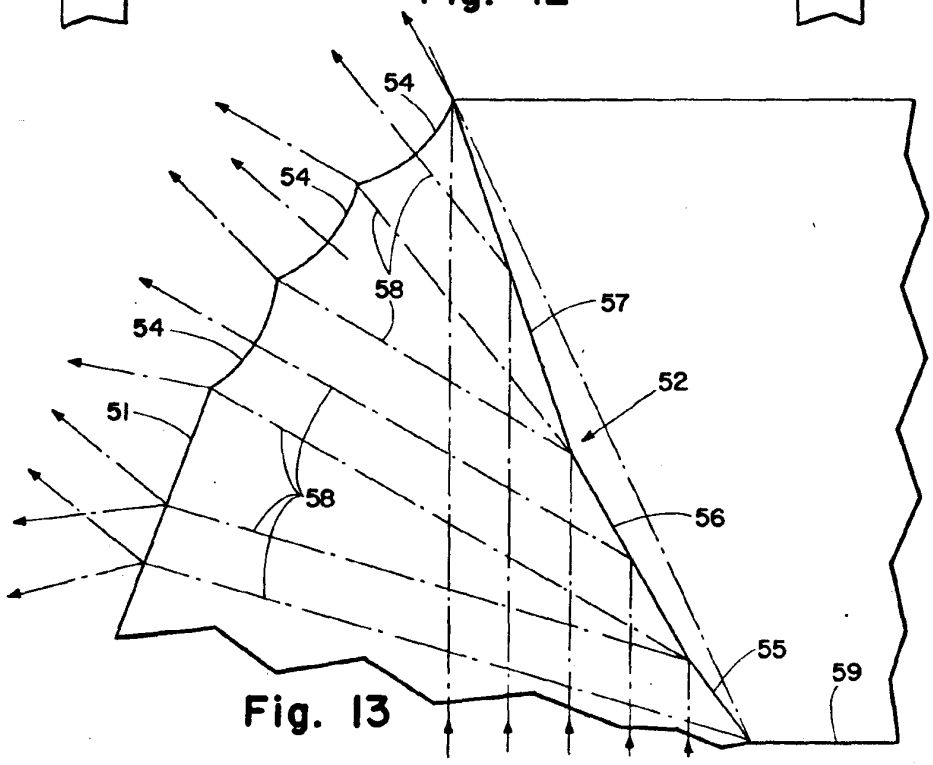
54
54
58
57
54
52
51
58
56
55
59

Fig. 13

LICHTEMISSIONSDIODEN (LED) - ANZEIGEVORRICHTUNG

Publication number: DE3633203 (A1)
Publication date: 1988-03-31
Inventor(s): STEIN KARL-ULRICH DR ING [DE] +
Applicant(s): SIEMENS AG [DE] +
Classification:
- international: ***H01L33/00; G09F9/33;*** **H01L33/00**; **G09F9/33**; (IPC1-7): H01L33/00; G09F9/33; G02B6/00
- European: G09F9/33
Application number: DE19863633203 19860930
Priority number(s): DE19863633203 19860930

Also published as:
JP63090874 (A)
US4853593 (A)

Cited documents:
DE2324553 (A1)

Abstract not available for **DE 3633203 (A1)**

Data supplied from the ***espacenet*** database — Worldwide

(19) BUNDESREPUBLIK DEUTSCHLAND

DEUTSCHES PATENTAMT

(12) **Offenlegungsschrift**

(11) **DE 3633203 A1**

(51) Int. Cl. 4:
G 09 F 9/33
G 02 B 6/00
// H01L 33/00

(21) Aktenzeichen: P 36 33 203.8
(22) Anmeldetag: 30. 9. 86
(43) Offenlegungstag: 31. 3. 88

Behördeneigentum

DE 3633203 A1

(71) Anmelder:
Siemens AG, 1000 Berlin und 8000 München, DE

(72) Erfinder:
Stein, Karl-Ulrich, Dr.-Ing., 8025 Unterhaching, DE

(54) Lichtemissionsdioden (LED) - Anzeigevorrichtung

Die Erfindung bezieht sich auf eine Lichtemissionsdioden(LED)-Anzeigevorrichtung mit mehreren innerhalb einer transparenten Front-Trägerplatte (8) angeordneten Leuchtsegmenten (2), denen jeweils eine Lichtemissionsdiode (3) zugeordnet ist, die mit dem entsprechenden Leuchtsegment (2) jeweils über ein Lichtleitsegment (4) verbunden ist. Diese Anzeigevorrichtung soll einen geringen Raumbedarf haben, einfach und kostengünstig herstellbar sein und eine große Designflexibilität erlauben, um eine Erweiterung ihres Anwendungsbereichs zu ermöglichen. Die Erfindung sieht hierzu vor, daß das Lichtleitsegment (4) im Bereich des jeweiligen Leuchtsegments (2) als nahezu planare Lichtleiterstruktur (1) zur Verteilung des von der jeweiligen Lichtemissionsdiode (3) emittierten Lichts im Bereich des Leuchtsegments (2) ausgebildet ist.
Die erfindungsgemäße Lichtemissionsdioden-Anzeigevorrichtung findet als LED-Display für Ziffern und Zeichen Anwendung.

FIG. 1

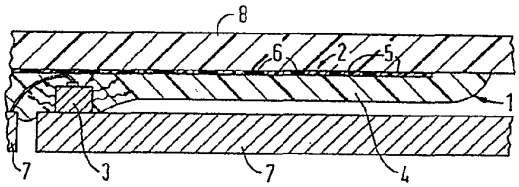

DE 3633203 A1

Patentansprüche

1. Lichtemissionsdioden (LED) — Anzeigevorrichtung mit mehreren innerhalb einer transparenten Front-Trägerplatte angeordneten Leuchtsegmenten, denen jeweils eine Lichtemissionsdiode (LED) zugeordnet ist, die mit dem entsprechenden Leuchtsegment jeweils über ein Lichtleitsegment verbunden ist, **dadurch gekennzeichnet,** daß das Lichtleitsegment (4) im Bereich des jeweiligen Leuchtsegments (2) als nahezu planare Lichtleiterstruktur (1) zur Verteilung des von der jeweiligen Lichtemissionsdiode (3) emittierten Lichtes im Bereich des Leuchtsegments (2) ausgebildet ist.

2. Anzeigevorrichtung nach Anspruch 1, dadurch gekennzeichnet, daß die Lichtemissionsdiode (3) ein LED-Chip ist.

3. Anzeigevorrichtung nach Anspruch 1 oder 2, dadurch gekennzeichnet, daß der LED-Chip (3) in das Lichtleitsegment (4) der planaren Lichtleiterstruktur (1) außerhalb oder innerhalb des vom Leuchtsegment (2) überdeckten Bereichs eingebettet ist.

4. Anzeigevorrichtung nach einem der Ansprüche 1 bis 3, dadurch gekennzeichnet, daß das Lichtleitsegment (4) das gesamte Leuchtsegment (2) überdeckt.

5. Anzeigevorrichtung nach einem der Ansprüche 1 bis 4, dadurch gekennzeichnet, daß das Leuchtsegment (2) rasterförmige Öffnungen (5) bzw. Abdeckungen aufweist.

6. Anzeigevorrichtung nach Anspruch 5, dadurch gekennzeichnet, daß die rasterförmigen Öffnungen (5) des Leuchtsegments (2) eine mit der Länge des Lichtleitsegments (4) zunehmende Öffnung aufweisen.

7. Anzeigevorrichtung nach Anspruch 5 oder 6, dadurch gekennzeichnet, daß die rasterförmigen Öffnungen (5) des Leuchtsegments (2) mit einem Diffusorschichtraster abgedeckt sind.

8. Anzeigevorrichtung nach einem der Ansprüche 1 bis 7, dadurch gekennzeichnet, daß die planare Lichtleiterstruktur (1) am Übergang zwischen Front-Trägerplatte (8) und Lichtleitsegment (4) mindestens eine Reflektorschicht (6) aufweist.

9. Anzeigevorrichtung nach Anspruch 8, dadurch gekennzeichnet, daß die Reflektorschicht (6) auf der dem LED-Chip (3) abgewandten Seite die Display-Grundfarbe aufweist.

10. Anzeigevorrichtung nach einem der Ansprüche 1 bis 9, dadurch gekennzeichnet, daß sich das Leuchtsegment (2) aus rasterförmigen, mit einem Diffusorschichtraster bedeckten Öffnungen (5) und dazwischenliegenden Reflektorschichtrastern (6) zusammensetzt.

11. Anzeigevorrichtung nach einem der Ansprüche 1 bis 10, dadurch gekennzeichnet, daß Leiterband (7) und Frontplatte (8) miteinander durch einen vorzugsweise weißen, diffus reflektierenden Kunststoffverguß (10) verbunden sind.

12. Verfahren zum Herstellen einer Anzeigevorrichtung nach einem der Ansprüche 1 bis 11, dadurch gekennzeichnet, daß eine transparente, in der Display-Farbe eingefärbte Front-Trägerplatte (8) im Nutzen oder in Streifen mit dem die Leuchtsegmente (2) bildenden Reflektor- und Diffusorraster bedruckt wird, daß das Leiterband (7) mit LED-Chips (3) bestückt und kontaktiert wird, daß die Lichtleitsegmente (4) auf der Front-Trägerplatte (8) durch mindestens einen Druckvorgang mit einem Druckverfahren, das dicke Schichten erlaubt, wie Siebdruck, aufgebracht werden, daß das Leiterband (7) mit den Chips (3) mit den zumindest teilweise noch flüssigen Lichtleitsegmenten (4) verbunden wird und daß die Bauelemente aus dem Nutzen- oder Streifenverband heraus vereinzelt werden.

Beschreibung

Die Erfindung betrifft eine Lichtemissionsdioden (LED) — Anzeigevorrichtung gemäß dem Oberbegriff des Anspruchs 1.

Bei Lichtemissionsdioden (LED) — Anzeigevorrichtungen, die auch unter der Bezeichnung LED-Displays bekannt sind, besteht das zentrale Problem darin, das aus einem sehr kleinen Halbleiterchip, mit einer Kantenlänge von beispielsweise 300 µm und weniger, austretende Licht auf ein großes Leuchtsegment, mit einer Abmessung (Länge/Breite) von beispielsweise 1 mm × 5 mm, zu verteilen.

Bekannt sind z.B. die sogenannten Sieben-Segment-Anzeigevorrichtungen. Bei diesen Vorrichtungen werden die Ziffern oder Symbole aus einzelnen Leuchtbalken (Leuchtsegmenten) zusammengesetzt. Mit insgesamt sieben Segmenten kann man die Ziffern 0 bis 9 und für Sonderfälle eine beschränkte Zahl von Buchstaben darstellen. Das Grundraster bildet dabei ein stehendes Rechteck, das in der Mitte durch einen waagerechten Balken unterteilt ist. Hierbei werden die einzelnen Leuchtsegmente mit Lichtemissionsdioden (light emitting diodes, abgekürzt LED), die auch unter der Bezeichnung Leuchtdioden bekannt sind, zur Anzeige beleuchtet. Diese Systeme zeichnen sich durch geringe Leistungsaufnahme, geringen Platzbedarf, große Helligkeit und gute Lesbarkeit auch unter flachen Blickwinkeln aus.

Bei diesen bekannten Sieben-Segment-Anzeigen wird in einer Kappe für jedes Leuchtsegment ein trichterförmiger Reflektor verwendet, an dessen Grund sich der LED-Chip befindet. Dieser trichterförmige Reflektor, der nach dem Prinzip der diffusen Relexion wirkt, wird mit einem Harz, das etwas Diffusorsubstanz enthält, gefüllt und mit dem Chip-Träger-Leadframe (Metallspinne) verbunden.

Der Erfindung liegt die Aufgabe zugrunde, eine LED-Anzeigevorrichtung zu schaffen, die eine Verteilung des aus einem LED-Chip austretenden Lichtes auf das zugeordnete Leuchtsegment mit hohem Wirkungsgrad ermöglicht, die eine relativ einfache und kostengünstige Herstellung insbesondere mit herkömmlichen Mitteln erlaubt, die sich durch einen sehr geringen Raumbedarf auszeichnet und die eine große Freiheit im Design bei Verwendung einer identischen Fertigungslinie und damit eine Erweiterung der Display-Anwendungsmöglichkeiten zuläßt.

Diese Aufgabe wird erfindungsgemäß durch eine Lichtemissionsdioden (LED) — Anzeigevorrichtung mit den Merkmalen des Anspruchs 1 gelöst.

Vorteilhafte Ausgestaltungen und Weiterbildungen der Erfindung sind Gegenstand zusätzlicher Ansprüche.

Bei der erfindungsgemäßen LED-Anzeigevorrichtung wird — anstelle des bekannten Prinzips mit einem trichterförmigen, tiefen Reflektor — eine quasi planare Lichtleiterstruktur zur Verteilung des vom LED-Chip herrührenden Lichts im Bereich eines Leuchtsegments verwendet.

Die Lichteinkoppelung in die planare Lichtleiter-

struktur erfolgt am Rande außerhalb des Leuchtsegments oder im Bereich des Leuchtsegments. Der Lichtleiter überdeckt das gesamte Leuchtsegment. Die Führung des Lichts im Lichtleiter erfolgt durch Brechungsindexunterschied, z.B. an der Grenzschicht von Kunststoff an der Vorderseite und Luft an der Rückseite des Lichtleiters oder durch mindestens eine Reflektorschicht, z.B. an der Frontträgerplatte zum Kunststoff-Lichtleiter. Der Lichtaustritt am Leuchtsegment erfolgt durch rasterförmige Öffnungen, die vorzugsweise mit einem Diffusorschichtraster bedeckt sein können. Die Reflektorschicht weist auf der Sichtseite die Display-Grundfarbe auf. Die Rasteröffnungen für den Lichtaustritt werden — ähnlich wie beim Rasterdruck — mit einer über die Länge des Lichtleiters zunehmenden Öffnung gewählt. Dadurch wird erreicht, daß das gesamte Leuchtsegment gleichmäßig beleuchtet erscheint.

Die Chips selbst werden zweckmäßig in an sich bekannter Weise auf Leiterbändern durch Aufkleben aufgebracht und mit Drähten kontaktiert. Die Chips werden zweckmäßig unter Einbeziehen des Leiterbandes in der Umgebung des Chips als Reflektor formschlüssig mit dem Lichtleiter verbunden.

Die mit der Erfindung erzielten Vorteile bestehen insbesondere darin, daß die Vorrichtung gegenüber den bisher bekannten eine relativ einfache Herstellung erlaubt, die von vornherein im Nutzen erfolgt. Außerdem benötigt die Vorrichtung wenig Raum. Darüber hinaus hat die vorgeschlagene Vorrichtung inhärent eine wesentlich größere Designflexibilität als die bekannten Vorrichtungen mit Reflektor-Kappen. Mit der vorgeschlagenen Vorrichtung wird erlaubt, über die bisherigen Anwendungsmöglichkeiten hinaus die LED-Technologie für spezifische Leuchttafeln mit Segmenten, Symbolen und alphanumerischen Zeichen anzuwenden.

Die erfindungsgemäße LED-Anzeigevorrichtung wird vorzugsweise folgendermaßen hergestellt:

Eine transparente, in der Display-Farbe eingefärbte Frontträgerplatte wird im Nutzen oder in Streifen mit dem Reflektor- und Diffusorraster bedruckt.

Das Einfärben der Frontträgerplatte (Folie) in der Display- bzw. Emissionsfarbe dient der Kontraststeigerung. Für eine mehrfarbige Anzeige kann es aber auch zweckmäßig sein, eine farbneutrale Frontträgerplatte (Folie) zu verwenden.

Das Leiterband wird mit Chips bestückt und kontaktiert (evtl. vorgetestet).

Die Lichtleitsegmente werden auf der Frontträgerplatte durch einen bzw. mehrere Druckvorgänge mit einem Druckverfahren, das dicke Schichten erlaubt — z.B. Siebdruck — hergestellt.

Das Leiterband mit den Chips wird mit den zumindest teilweise noch flüssigen Lichtleitsegmenten verbunden. Soweit erforderlich, werden zur Unterstützung dieser Verbindung die Chips ebenfalls mit dem noch flüssigen Lichtleitermaterial im Nutzen betröpfelt. Als Lichtleitermaterial wird ein transparentes Kunstharz verwendet.

Die einzelnen Bauelemente werden aus dem bisherigen Nutzen- oder Streifenverband heraus vereinzelt, evtl. gerahmt.

Auf das Rahmen soll vorzugsweise verzichtet werden. Dies wird dadurch erreicht, daß die Lichtleiter/Chipbetröpfelung-Kunststoffeinheit auch als Kleber zur Befestigung der Kontaktenden des Leadframes auf der Frontträgerplatte verwendet wird.

Anhand von in den Figuren der Zeichnung rein schematisch dargestellten Ausführungsbeispielen wird die Erfindung weiter erläutert. Teile, die nicht unbedingt zum Verständnis der Erfindung beitragen, sind in den Figuren unbezeichnet oder weggelassen. Es zeigen

Fig. 1 einen schematischen Querschnitt durch ein Leuchtsegment der erfindungsgemäßen LED-Anzeigevorrichtung,

Fig. 2 einen schematischen Querschnitt durch eine erfindungsgemäße LED-Anzeigevorrichtung mit Anschlüssen,

Fig. 3 die Anordnung von Leuchtsegment, Lichtleiter und LED-Chip und

Fig. 4 eine weitere Anordnung von Leuchtsegment, Lichtleiter und LED-Chip.

Die in den **Fig.** 1 und 2 dargestellte LED-Anzeigevorrichtung besteht im wesentlichen aus einem auf der Innenseite einer transparenten Front-Trägerplatte **8** angeordneten Leuchtsegment **2**, dem ein LED-Chip **3** zugeordnet ist. Der LED-Chip **3** ist mit dem zugehörigen Leuchtsegment **2** über ein Lichtleitsegment **4** verbunden. Das Lichtleitsegment **4** ist dabei im Bereich des Leuchtsegments **2** als nahezu planare Lichtleiterstruktur **1** zur gleichmäßigen Verteilung des von dem LED-Chip **3** emittierten Lichts im Bereich des Leuchtsegments **2** ausgebildet. Das Leuchtsegment **2** ist auf die in der Display-Farbe eingefärbte, beispielsweise aus Kunststoff bestehende Front-Trägerplatte **8** in Form eines Rasters aufgebracht, das sich aus einer Diffusorschicht **5** und einer Reflektorschicht **6** zusammensetzt. Das Leiterband **7** ist mit dem LED-Chip **3** bestückt und kontaktiert. Der von dem Lichtleitsegment **4**, das beispielsweise aus einem transparenten Kunststoff besteht, freigelassene Raum zwischen Lichtleitsegment **4**, Front-Trägerplatte **8** und Leiterband **7** enthält Luft.

Bei dem in **Fig.** 2 dargestellten Ausführungsbeispiel ist die LED-Anzeigevorrichtung, deren Aufbau der in **Fig.** 1 dargestellten Vorrichtung im wesentlichen entspricht, mit elektrischen Anschlüssen versehen. Das Leiterband **7** ist hierzu als sogenannter Leadframe ausgebildet. Die Verbindung **9** zwischen Front-Trägerplatte **8** und Leadframe erfolgt zweckmäßig durch Verkleben. Die abgewinkelten Teile des Leadframe bilden die Anschlußbeine der Vorrichtung. Leiterband **7** und Frontplatte **8** sind miteinander durch einen vorzugsweise weißen, diffus reflektierenden Kunststoffverguß **10** verbunden.

In den **Fig.** 3 und 4 sind rein schematisch in Draufsicht Beispiele für die Anordnung von Leuchtsegment **2**, Lichtleitsegment **4** und LED-Chip **3** in einem Ausschnitt dargestellt. Im Beispiel der **Fig.** 3 ist der LED-Chip **3** im Lichtleitsegment **4** innerhalb des vom Leuchtsegment **2** überdeckten Bereichs angeordnet.

Im Beispiel der **Fig.** 4 ist der LED-Chip **3** im Lichtleitsegment **4** außerhalb des vom Leuchtsegment **2** überdeckten Bereichs angeordnet.

– Leerseite –

Nummer: 36 33 203
Int. Cl.[4]: G 09 F 9/33
Anmeldetag: 30. September 1986
Offenlegungstag: 31. März 1988

86 P 1 7 1 9 DE

FIG 1

3633203

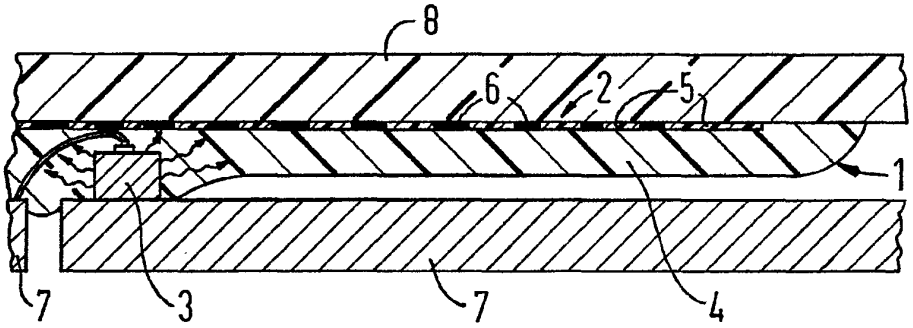

FIG 2

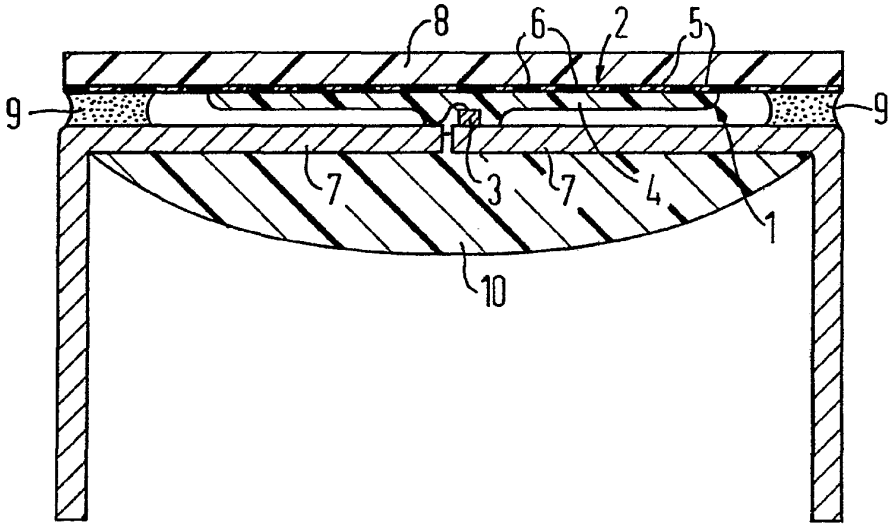

808 813/396

FIG 3

3633203

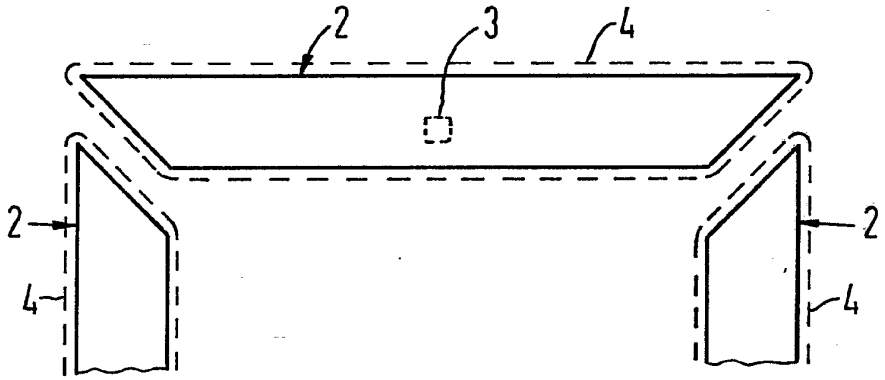

FIG 4

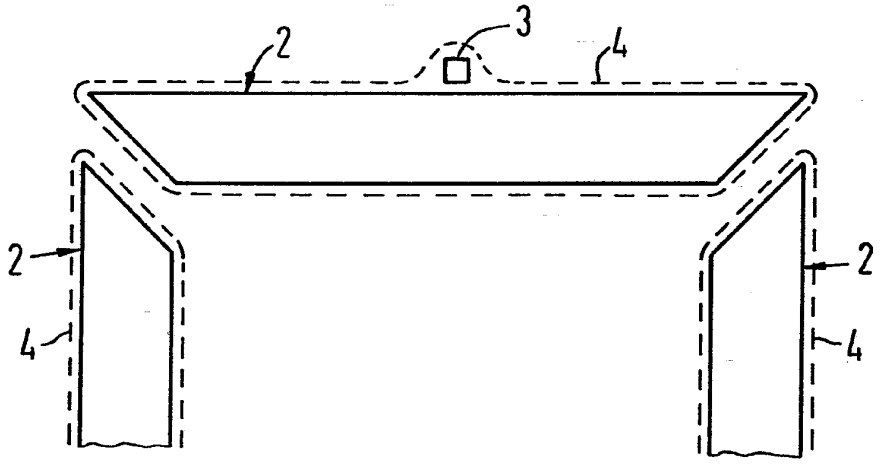

Illuminated display unit, in particular house number, traffic sign, advertising medium

Publication number: DE3825436 (A1)
Publication date: 1989-03-23
Inventor(s): VERZICHT DES ERFINDERS AUF NENNUNG
Applicant(s): INOTEC GMBH GES FUER INNOVATIV [DE] +
Classification:
- international: ***G09F13/20;*** *G09F13/04;* **G09F13/20**; G09F13/04; (IPC1-7): F21S5/00; G02B6/00; G09F13/20
- European: G09F13/20
Application number: DE19883825436 19880727
Priority number(s): DE19883825436 19880727; DE19873730591 19870911

Also published as:
- DE3825436 (C2)

Cited documents:
- DE3730591 (C1)
- DE3049064 (C2)
- DE3602819 (A1)
- DE3322393 (A1)
- DE2359460 (A1)

Abstract of **DE 3825436 (A1)**

An illuminated display unit is proposed, in particular house number, traffic sign, advertising medium or the like, which consists of a fluorescing light-guiding plate (10) into which at least one luminous element (11) is inserted on at least one lateral terminating edge. To prevent light from leaving, the terminating edges are provided with a reflecting layer (12). Display symbols (14) or their negatives are arranged, seen from the viewer, on the rear surface of the light-guiding plate (10).; Due to total reflection in the case of a light-guiding plate at the front and rear side and the reflecting layer at the edges, the light generated by the luminous element (11) can only leave by the contact surface with the display symbols (14) so that at this point the light is very highly concentrated and a large brightness of the display is produced which seems even more effective as a result of a contrasting surface (16) which is arranged behind it. In this way, high brightnesses of display can be used in conjunction with very low electrical power, which permit permanent use or the use of a low number of solar cells.

FIG. 1

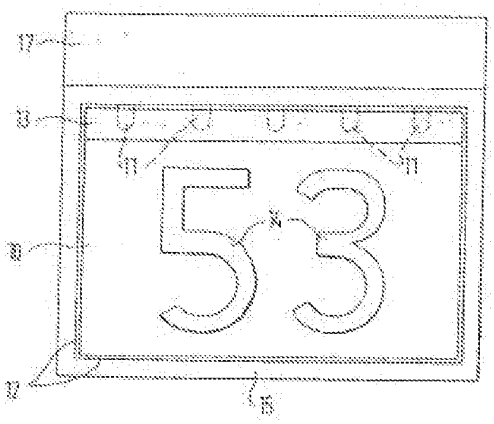

Data supplied from the ***espacenet*** database — Worldwide

(19) BUNDESREPUBLIK DEUTSCHLAND

DEUTSCHES PATENTAMT

(12) **Offenlegungsschrift**

(11) **DE 3825436 A1**

(51) Int. Cl. 4:
G 09 F 13/20
F 21 S 5/00
G 02 B 6/00

(21) Aktenzeichen: P 38 25 436.0
(22) Anmeldetag: 27. 7. 88
(43) Offenlegungstag: 23. 3. 89

Behördeneigentum

DE 3825436 A1

(30) Innere Priorität: (32) (33) (31)
11.09.87 DE 37 30 591.3

(71) Anmelder:
Inotec GmbH Gesellschaft für innovative Technik, 7300 Esslingen, DE

(74) Vertreter:
Magenbauer, R., Dipl.-Ing.; Reimold, O., Dipl.-Phys. Dr.rer.nat.; Vetter, H., Dipl.-Phys. Dr.-Ing., Pat.-Anwälte, 7300 Esslingen

(72) Erfinder:
Antrag auf Nichtnennung

Prüfungsantrag gem. § 44 PatG ist gestellt

(54) Beleuchtete Anzeigeeinheit, insbesondere Hausnummer, Verkehrsschild, Werbeträger

Es wird eine beleuchtete Anzeigeeinheit, insbesondere Hausnummer, Verkehrsschild, Werbeträger o. dgl. vorgeschlagen, die aus einer fluoreszierenden Lichtleitplatte (10) besteht, in die wenigstens ein Leuchtelement (11) an wenigstens einer seitlichen Begrenzungskante eingelassen ist. Die Begrenzungskanten sind zur Verhinderung eines Lichtaustritts mit einer reflektierenden Schicht (12) versehen. Anzeigesymbole (14) oder ihre Negative sind vom Betrachter aus gesehen an der hinteren Fläche der Lichtleitplatte (10) angeordnet. Infolge der Totalreflexion bei einer Lichtleitplatte an der Vorder- und Rückseite und der reflektierenden Schicht an den Kanten kann das vom Leuchtelement (11) erzeugte Licht lediglich an der Kontaktfläche mit den Anzeigesymbolen (14) austreten, so daß dort das Licht sehr stark konzentriert und eine große Anzeigehelligkeit erzeugt wird, die infolge einer dahinter angeordneten Kontrastfläche (16) noch wirksamer erscheint. Auf diese Weise lassen sich bei sehr geringen elektrischen Leistungen große Anzeigehelligkeiten erzeugen, die einen Dauerbetrieb oder einen Betrieb mit einer geringen Anzahl von Solarzellen gestatten.

FIG. 1

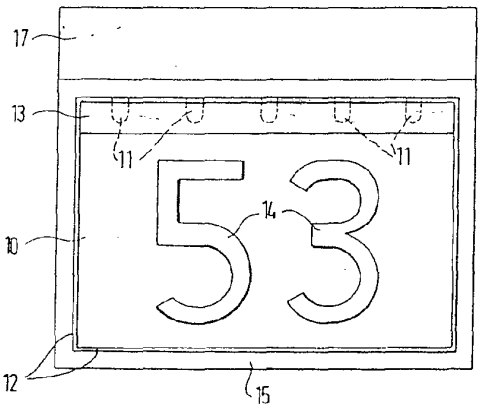

DE 3825436 A1

Patentansprüche

1. Beleuchtete Anzeigeeinheit, insbesondere Hausnummer, Verkehrsschild, Werbeträger, bestehend aus einer Lichtleitplatte, in die wenigstens ein elektrisches Leuchtelement an wenigstens einer seitlichen Begrenzungskante eingelassen ist und die Anzeigesymbole trägt, wobei die Begrenzungskanten mit einer reflektierenden Schicht versehen sind, **dadurch gekennzeichnet**, daß die Lichtleitplatte **(10)** fluoreszierende Partikel enthält und eine Wandung im vorderen Bereich der Anzeigeeinheit bildet, daß eine dahinter angeordnete Wandung eine Kontrastfläche **(16)** bildet und daß die Anzeigesymbole **(14)** vom Betrachter aus gesehen an der hinteren Fläche der Lichtleitplatte **(10)** angeordnet sind.

2. Anzeigeeinheit nach Anspruch 1, dadurch gekennzeichnet, daß die vordere Fläche der Lichtleitplatte **(10)** im Bereich der Leuchtelemente **(11, 23)** mit einer reflektierenden Schicht **(13)** versehen ist.

3. Anzeigeeinheit nach Anspruch 2, dadurch gekennzeichnet, daß die reflektierenden Schichten **(12, 13)** durch Verspiegelung oder eine metallisch glänzende Folie gebildet sind.

4. Anzeigeeinheit nach einem der vorhergehenden Ansprüche, dadurch gekennzeichnet, daß die Anzeigesymbole **(14)** als Folien ausgebildet sind, die eng an der Oberfläche der Lichtleitplatte **(10)** anliegen, insbesondere aufgeklebt oder als Klebefolien ausgebildet sind.

5. Anzeigeeinheit nach einem der Ansprüche 1 bis 3, dadurch gekennzeichnet, daß die Anzeigesymbole **(14)** als aufgedampfte Beschichtung ausgebildet oder in die Lichtleitplatte **(10)** eingeformt oder eingefräst sind.

6. Anzeigeeinheit nach einem der vorhergehenden Ansprüche, dadurch gekennzeichnet, daß eine Gehäuseanordnung **(15)** eine aufladbare Batterie **(19)** für das wenigstens eine Leuchtelement **(11)** und eine durch Solarzellen **(17)** betriebene Ladevorrichtung **(20)** für die Batterie **(19)** aufweist.

7. Anzeigeeinheit nach Anspruch 6, dadurch gekennzeichnet, daß wenigstens eine schräggestellte Wandung der Gehäuseanordnung und/oder die Kontrastfläche **(16)** und/oder die reflektierende Schicht **(13)** an der vorderen Fläche der Lichtleitplatte **(10)** mit Solarzellen **(17)** versehen ist.

8. Anzeigeeinheit nach Anspruch 6 oder 7, dadurch gekennzeichnet, daß ein das wenigstens eine Leuchtelement **(11, 23)** nur unterhalb einer vorgebbaren Außenhelligkeit einschaltender Dämmerungsschalter vorgesehen ist.

9. Anzeigeeinheit nach Anspruch 8, dadurch gekennzeichnet, daß die von den Solarzellen **(17)** erzeugte elektrische Energie unterhalb eines vorgebbaren Schwellwerts den Dämmerungsschalter einschaltet.

10. Anzeigeeinheit nach einem der vorhergehenden Ansprüche, dadurch gekennzeichnet, daß ein einziges Leuchtelement **(11, 23)** an einer seitlichen Begrenzungskante eingelassen ist.

11. Anzeigeeinheit nach einem der vorhergehenden Ansprüche, dadurch gekennzeichnet, daß vor der Lichtleitplatte **(10)** eine durchsichtige Schutzwandung angeordnet ist, die diese vorzugsweise an wenigstens zwei Seiten seitlich umgreift.

12. Anzeigeeinheit nach einem der vorhergehenden Ansprüche, dadurch gekennzeichnet, daß das wenigstens eine Leuchtelement **(11)** als Leuchtdiode ausgebildet ist.

13. Anzeigeeinheit, insbesondere Hausnummer, Verkehrsschild, Werbeträger, bestehend aus einer Lichtleitplatte, in die wenigstens ein elektrisches Leuchtelement an wenigstens einer seitlichen Begrenzungskante eingelassen ist oder anliegt und die Anzeigesymbole trägt, wobei die Begrenzungskanten mit einer reflektierenden Schicht versehen sind, insbesondere nach einem der vorhergehenden Ansprüche, dadurch gekennzeichnet, daß die Lichtleitplatte **(10)** fluoreszierende Partikel enthält, daß die Anzeigesymbole **(14)** vom Betrachter aus gesehen an der hinteren Fläche der Lichtleitplatte **(10)** angeordnet sind und daß das wenigstens eine Leuchtelement **(23)** als Endbereich eines Lichtleiters **(24)** ausgebildet ist, dessen anderer Endbereich **(25)** mit einer außerhalb der Lichtleitplatte **(10)** angeordneten Lichtquelle **(27)** optisch gekoppelt ist.

14. Anzeigeeinheit nach Anspruch 13, dadurch gekennzeichnet, daß von einer Lichtquelle **(27)** mehrere Lichtleiter **(24)** ausgehen.

15. Anzeigeeinheit nach Anspruch 13 oder 14, dadurch gekennzeichnet, daß mehrere Lichtquellen **(27)** vorgesehen sind.

16. Anzeigeeinheit nach einem der Ansprüche 13 bis 15, dadurch gekennzeichnet, daß die Lichtquelle **(27)** als Leuchtdiode ausgebildet ist.

Beschreibung

Die Erfindung betrifft eine beleuchtete Anzeigeeinheit gemäß dem Oberbegriff des Anspruchs 1.

Eine derartige Anzeigeeinheit ist aus der DE-OS 33 22 393 bekannt. Bei der dort beschriebenen Leuchte sind Leuchtdioden von den schmalen Kanten aus in eine Streuscheibe eingesetzt, um das Licht möglichst vollständig in diese einzubringen. Aus **Fig.** 1 ist zu schließen, daß hiermit ein Symbol von hinten angeleuchtet wird, so daß ein Kontrast entsteht. Die Lichtausbeute ist dabei allerdings sehr gering, so daß diese Anordnung beispielsweise für größere Anzeigeflächen nicht geeignet ist.

Auch aus der US-PS 43 73 284 oder der US-PS 44 84 104 ist es beispielsweise bekannt, die die entsprechenden Symbole tragende Platte von hinten zu beleuchten, so daß die Information durch unterschiedliche Färbung oder unterschiedliche Lichtdurchlässigkeit hervortritt. Weiterhin ist es bekannt, die Symbole, beispielsweise eine Schrift selbst durch eine entsprechend geformte Leuchtröhre gemäß der CH-PS 1 68 894 zu bilden, oder es sind gemäß der DE-PS 30 49 064 Leuchtelemente entsprechend der Gestalt der Symbole aneinandergereiht.

Die bekannten Anzeigeeinheiten weisen insgesamt den Nachteil eines relativ hohen Strombedarfs auf, so daß beim Betrieb mit Solarzellen eine große Zahl von Solarzellen und eine große Speicherkapazität erforderlich ist.

Weiterhin ist aus der DE-OS 36 02 819 eine Anzeigeeinheit der eingangs angegebenen Gattung bekannt, bei der Leuchtelemente in eine fluoreszierende Lichtleitplatte eingelassen sind, um von hinten her Anzeigesymbole zu beleuchten. Diese bekannte Lösung stellt zwar eine Verbesserung gegenüber den bisherigen Lösungen hinsichtlich des Energiebedarfs dar, jedoch ist dieser immer noch nicht zufriedenstellend gering. Ein weiterer Nachteil besteht darin, daß die Lichtleitplatte eine ge-

krümmte Reflexionsfläche aufweisen muß, so daß handelsübliche Platten nicht verwendet werden können und die Herstellung aufwendig und teuer wird. Ohne diese gekrümmte Reflexionsfläche wäre eine einigermaßen gleichmäßige Ausleuchtung großer Anzeigeflächen nicht gewährleistet.

Zwar ist aus der DE-OS 23 56 947 die Anbringung von Symbolen auf der Rückseite einer durchsichtigen Platte an sich bekannt, jedoch ist auch bei dieser bekannten Anordnung die Lichtausbeute sehr gering, da das Licht seitlich durch eine Außenkante der Platte unter Reflektionsverlusten eindringen muß und keine Kontrastfläche vorgesehen ist. Darüber hinaus ist bei gewöhnlichen durchsichtigen Platten kein besonderer Lichtaustritt an Berührungsstellen zu beobachten.

Der Erfindung liegt daher die Aufgabe zugrunde, eine beleuchtete Anzeigeeinheit der eingangs genannten Art zu entwickeln, die bei verbesserter Lichtausbeute eine gleichmäßigere Beleuchtung und auch größere Anzeigeflächen gewährleistet.

Diese Aufgabe wird durch die kennzeichnenden Merkmale im Anspruch 1 gelöst.

Die Erfindung basiert auf der Überlegung, daß Licht aus einer fluoreszierenden Lichtleitplatte im wesentlichen nur an Konstaktstellen oder Schnittkanten austreten kann. Da alle seitlichen Begrenzungskanten mit einer reflektierenden Schicht versehen sind, kann das Licht dort nicht austreten, sondern wird in die Platte zurückreflektiert. Das Licht kann somit lediglich an der Stelle austreten, an der die Anzeigesymbole oder ihre Negative angebracht sind, nämlich an der hinteren Fläche der Lichtleitplatte. Diese Stellen werden dadurch sehr intensiv von allen Seiten durch das in der Lichtleitplatte verteilte Licht gleichmäßig beleuchtet und werden dadurch durch die Lichtleitplatte hindurch betrachtet sehr gut sichtbar, was durch die dahinter angeordnete Kontrastfläche noch weiter verbessert wird. Da sich das gesamte Licht nahezu verlustlos auf diese Stellen konzentriert, ist eine sehr gute Lichtausbeute gegeben. Im Gegensatz beispielsweise zu den aus der DE-OS 36 02 819 oder der US-PS 44 84 104 bekannten Anordnungen, bei denen die Symbole indirekt von hinten beleuchtet werden, ist hier eine direkte Beleuchtung der anzuzeigenden Symbole gewährleistet, das heißt, die sichtbaren Flächen werden direkt von vorne beleuchtet. Durch diese gute Lichtausbeute ist ein energiesparender Betrieb derartiger Anzeigeeinheiten möglich, so daß beispielsweise eine Hausnummer durch eine sehr geringe Anzahl von Solarzellen bei geringer Speicherkapazität einer Batterie und unter Verwendung auch einer einzigen Leuchtdiode betrieben werden kann. Bei einer Stromzuführung von außen ist infolge des geringen Verbrauchs ein Dauerbetrieb möglich, so daß auf zusätzliche Schaltmaßnahmen verzichtet werden kann.

Durch die in den Unteransprüchen aufgeführten Maßnahmen sind vorteilhafte Weiterbildungen und Verbesserungen der im Anspruch 1 angegebenen Anzeigeeinheit möglich.

Die Anzeigesymbole oder ihre Negative können kostengünstig als eng anliegende Folien ausgebildet sein, die auf die Rückseite der Lichtleitplatte zur Erzielung eines möglichst engen Kontakts aufgeklebt oder als Klebefolie ausgebildet sind. Sie können jedoch auch als aufgedampfte Beschichtung ausgebildet oder in die Lichtleitplatte eingeformt, insbesondere eingefräst sein.

Zur Stromversorgung ist zweckmäßigerweise wenigstens eine schräggestellte Seitenwandung des Gehäuses und/oder die reflektierende Schicht an der vorderen Fläche der Lichtleitplatte und/oder die Kontrastfläche mit Solarzellen versehen. Im letzten Falle werden die Solarzellen durch die Lichtleitplatte hindurch beleuchtet, wozu sich vor allem Solarzellen für diffuses Licht eignen. Zur Speicherung der tagsüber eingestrahlten Sonnenenergie weist das Gehäuse eine aufladbare Batterie auf, der eine durch die Solarzelle betriebene Ladevorrichtung zugeordnet ist.

Zur zusätzlichen Einsparung von elektrischer Energie, beispielsweise bei sehr kleinen Solarzelleneinheiten oder relativ zu diesen sehr großen Lichtleitplatten, ist die Anzeigeeinheit zweckmäßigerweise mit einem die Leuchtelemente nur unterhalb einer vorgebbaren Außenhelligkeit einschaltenden Dämmerungsschalter versehen.

Vorteilhaft und auch von selbständiger erfinderischer Bedeutung ist die Ausbildung des wenigstens einen Leuchtelements als Endbereich eines Lichtleiters, dessen anderer Endbereich mit einer außerhalb der Lichtleitplatte angeordneten Lichtquelle optisch gekoppelt ist. Mit den sehr dünn ausbildbaren Lichtleitern bzw. Lichtleitfasern kann zum einen das Licht nahezu verlustfrei von der vorzugsweise als Leuchtdiode ausgebildeten Lichtquelle in die Lichtleitplatte übertragen werden, und zum anderen kann diese Lichtleitplatte material- und kostensparend sehr dünn ausgebildet werden, da sie prinzipiell nur geringfügig dicker als der dünne Lichtleiter sein muß.

Durch die Möglichkeit, einer Lichtquelle mehrere Lichtleiter zuzuordnen, ist eine sehr gute Lichtverteilung beispielsweise bei Verwendung nur einer einzigen als Leuchtdiode ausgebildeten Lichtquelle möglich. Bei sehr großen Lichtleitplatten können selbstverständlich auch mehrere Lichtquellen vorgesehen sein, die wiederum jeweils mehrere Lichtleiter speisen.

Ausführungsbeispiele der Erfindung sind in der Zeichnung dargestellt und in der nachfolgenden Beschreibung näher erläutert. Es zeigen:

Fig. 1 eine Anzeigeeinheit als Ausführungsbeispiel in einer Vorderansicht,

Fig. 2 dieselbe Anzeigeneinheit im Querschnitt,

Fig. 3 ein Blockschaltbild einer zweckmäßig einzusetzenden elektronischen Schaltung und

Fig. 4 ein Ausführungsbeispiel mit Lichtleitern in einer Teildarstellung.

Bei dem in den **Fig.** 1 und 2 dargestellten Ausführungsbeispiel wird die Anzeigefläche durch eine rechtwinkelige, fluoreszierende Lichtleitplatte **10** von beispielsweise 8 mm Dicke gebildet. Derartige Lichtleitplatten bestehen gewöhnlich aus glasklarem Kunststoff, der mit Fluoreszenzfarbstoff eingefärbt bzw. mit fluoreszierenden Partikeln versetzt ist. Derartige Lichtleitplatten haben die Eigenschaft, absorbiertes Licht durch Fluoreszenz wieder abzustrahlen. Die Fluoreszenzstrahlung wird durch Totalreflexion an die Begrenzungskanten geleitet und dort konzentriert abgestrahlt, sofern nicht dieses verhindernde Maßnahmen vorgesehen werden. Im übrigen erfolgt ein Lichtaustritt an denjenigen Stellen, an denen andere Körper in engen Kontakt mit der Lichtleitplatte treten.

An der oberen Begrenzungskante der Lichtleitplatte **10** sind im wesentlichen in gleichmäßigen Abständen angeordnet fünf Leuchtdioden **11** in entsprechende Ausnehmungen der Lichtleitplatte **10** eingelassen. Die Zahl der verwendeten Leuchtdioden ist selbstverständlich beliebig und hängt von der gewünschten Helligkeit ab. Im allgemeinen ist eine einzige Leuchtdiode z. B. für eine Hausnummer ausreichend, wenn die nachstehend

beschriebene Anordnung vorgesehen ist. Auch die übrigen Begrenzungskanten können selstverständlich mit eingelassenen Leuchtdioden versehen sein. Dies bietet sich insbesondere bei sehr großflächigen Lichtleitplatten an.

Zur Verhinderung eines Lichtaustritts an den vier Begrenzungskanten sind diese mit einer reflektierenden Schicht **12** versehen. Diese kann im einfachsten Falle aus einer Aluminiumfolie bestehen, sie kann jedoch auch durch Beschichtung oder Bedampfung verspiegelt sein. In jedem Falle erweist es sich als günstig, vor Anbringen der reflektierenden Schicht **12** die Begrenzungskanten sehr gut zu glätten, vorzugsweise zu polieren, damit ein enger Kontakt mit der reflektierenden Schicht **12** und ein gutes Reflexionsvermögen gegeben sind. Außerdem sind die Vorderseite und die Rückseite der Lichtleitplatte **10** im Bereich der Leuchtdioden **1** mit einer streifenförmigen reflektierenden Schicht **13** versehen, um einen direkten Lichtaustritt zu verhindern. Diese reflektierende Schicht **13** weist eine derartige Ausdehnung auf, daß die Totalreflexion an der Vorder- und Rückseite erhalten bleibt.

Auf die Rückseite der Lichtleitplatte **10** sind als Anzeigesymbole **14** die Ziffern **5** und **3** aufgebracht. Diese können entweder als Klebefolien ausgebildet oder in Folienform aufgeklebt sein. Wesentlich ist, daß ein sehr inniger Kontakt mit der Lichtleitplatte **10** erfolgt, der einen Lichtaustritt an den Kontaktstellen gestattet. Selbstverständlich können die Anzeigesymbole **14** auch durch Beschichtung, insbesondere durch Bedampfung, erzeugt sein.

Die Anzeigesymbole **14** weisen vorzugsweise einen hellen Farbton auf, damit das dort austretende Licht möglichst wenig absorbiert wird. Die so beleuchtete Anzeigesymbole sind durch die durchsichtige Lichtleitplatte **10** hindurch gut erkennbar. Selbstverständlich ist es auch möglich, ein Negativ dieser Anzeigesymbole zu erzeugen, das heißt, die gesamte Rückseite der Lichtleitplatte **10** ist mit einer eng anliegenden Schicht versehen, aus der lediglich die Ziffern, Buchstaben od. dgl. ausgespart sind.

Die Lichtleitplatte **10** ist in ein kastenförmiges Gehäuse **15** eingesetzt, wobei die vordere Wandung durch die Lichtleitplatte **10** selbst gebildet wird und die hintere Wandung **16** im Abstand dazu eine Kontrastfläche darstellt. Die Lichtleitplatte kann jedoch auch lediglich im vorderen Bereich einer gehäuseartigen Anzeigeeinheit angeordnet sein und noch von einer durchsichtigen Wandung zum Schutz der Lichtleitplatte überdeckt sein, wobei sich die Überdeckung auch auf die Seiten ausdehnen kann. Bei Anzeigesymbolen **14** in hellem Farbton ist die Kontrastfläche zweckmäßigerweise dunkel gefärbt, während bei als Negative ausgebildeten Anzeigesymbolen die Kontrastfläche hell gefärbt ist. An der Oberseite des Gehäuses **15** ist eine schräggestellte Solarzelleneinheit **17** angeordnet. wobei in Abhängigkeit von der geographischen Lage ein günstiger Schrägstellungswinkel beispielsweise 70° betragen kann. In dem zwischen der Solarzelleneinheit **17** und dem Gehäuse **15** gebildeten Raum **18** ist eine aufladbare Batterie **19** sowie eine Ladevorrichtung **20** angeordnet. Diese können selbstverständlich auch im Gehäuse **15** angeordnet und entsprechend der Kontrastfläche gefärbt oder mit einer entsprechenden Abdeckung versehen sein.

Es ist weiterhin möglich, auf der reflektierenden Schicht **13** an der vorderen Fläche der Lichtleitplatte **10** Solarzellen anzubringen. Ein weiterer günstiger Anbringungsort ist die Kontrastfläche, also die hintere Wandung **16** im Inneren des Gehäuses **15**. Hierfür werden vorzugsweise für diffuses Licht geeignete Solarzellen verwendet. Das Licht kann dabei durch die durchsichtige Lichtleitplatte **10** zu den Solarzellen gelangen. Ist die Lichtausbeute ausreichend, so kann die schräggestellte Solarzelleneinheit **17** auch entfallen.

Die Anzeigesymbole können auch in die Lichtleitplatte eingeformt, insbesondere eingefräst sein. An den so entstandenen Schrägkanten kann das Licht austreten, wodurch die entsprechenden Anzeigesymbole **14** hell hervortreten.

In **Fig.** 3 ist ein Blockschaltbild der elektrischen Schaltung dargestellt. Die in der Solarzelleneinheit **17** erzeugte elektrische Energie wird über die beispielsweise als Konstantstromquelle ausgebildete Ladevorrichtung **20** der aufladbaren Batterie **19** zur Energiespeicherung zugeführt. Auf diese Weise wird ein konstanter Ladestrom zur Schonung der Batterie gewährleistet. In Abhängigkeit der gewünschten Spannung kann die Ladevorrichtung **20** noch mit einem Spannungswandler versehen sein. Die Batterie **19** ist über einen Dämmerungsschalter **21** mit den fünf Leuchtdioden **11** verbunden. Tagsüber ist dieser Dämmerungsschalter **21** geöffnet, so daß die Batterie **19** ohne Stromentnahme geladen werden kann. Erst unterhalb einer vorgebbaren Außenhelligkeit, die z. B. über die Erfassung der von der Solarzelleneinheit **17** erzeugten elektrischen Energie oder durch einen anderen nicht dargestellten Fotohalbleiter ermittelt wird, schließt dieser Dämmerungsschalter **21**, und die Leuchtdioden **11** werden von der Batterie **19** gespeist. Zu diesem Zweck kann z. B. der von der Solarzelleneinheit **17** erzeugte Strom einer Schwellwerteinrichtung zugeführt werden, wobei bei Unterschreitung eines vorgebbaren Schwellwerts die Leuchtdioden **11** oder eine einzige Leuchtdiode eingeschaltet werden. Bei ausreichend großen Solarzelleneinheiten und genügender Lichteinstrahlung kann der Dämmerungsschalter **21** auch entfallen, oder er wird beispielsweise durch einen manuell betätigbaren Schalter ersetzt.

Anstelle eines Betriebs durch Solarzellen können die Leuchtdioden **11** auch in herkömmlicher Weise über eine Niederspannungsleitung von außen her gespeist werden. Da der Energiebedarf dieser Anzeigeeinheit äußerst gering ist. können die Leuchtdioden dann ständig eingeschaltet bleiben, so daß auf Schalteinrichtungen verzichtet werden kann.

In Abwandlung des dargestellten Ausführungsbeispiels kann die Lichtleitplatte **10** selbstverständlich auch eine andere Gestalt aufweisen, z. B. rund, oval oder dreieckig sein.

Bei dem in **Fig.** 4 dargestellten Ausführungsbeispiel ist die Lichtleitplatte **10** nur ausschnittsweise im Bereich einer Oberkante dargestellt. Anstelle von Leuchtdioden **11** dienen hier Endbereiche **23** von Lichtleitern **24** als Leuchtelemente, die in die Lichtleitplatte **10** eingelassen sind. Als Lichtleiter dienen im allgemeinen Glasfaserkabel oder Lichtleitkabel aus Kunststoff. Diese Lichtleiter **24** sind in entsprechende Bohrungen in der Lichtleitplatte **10** eingesteckt und dort verklemmt oder verklebt. Alternativ hierzu können die Lichtleiter **24** auch Übertragungsendstücke oder -halterungen tragen, die mit der Lichtleitplatte **10** verbunden werden. Hierbei können die Stirnflächen der Lichtleiter **24** auch an den Seitenkanten der Lichtleitplatte **10** anliegen. Die Bohrungen sollten keine glatte, sondern eine unregelmäßige Oberfläche aufweisen, um eine gute Lichtbrechung und -verteilung zu gewährleisten.

Die jeweils zweiten Endbereiche **25** der Lichtleiter **24** münden in einem optischen Adapterstück **26**, das die optische Verbindung mit einer Leuchtdiode **27** als Lichtquelle gewährleistet.

Auf diese Weise kann eine Vielzahl von Lichtleitern **24** einer einzelnen Leuchtdiode **27** zugeordnet werden, so daß durch die nahezu verlustlose Übertragung eine sehr gleichmäßige Lichtverteilung in der Lichtleitplatte **10** erreicht wird. Im einfachsten Falle kann selbstverständlich auch ein einziger Lichtleiter **24** einer Leuchtdiode **27** zugeordnet sein.

Da die Lichtleiter **24** sehr dünn ausgebildet sein können, kann auch die Lichtleitplatte **10** eine sehr geringe Dicke aufweisen, wodurch die gesamte Anordnung kostengünstiger und leichter wird.

Bei sehr großen Lichtleitplatten können selbstverständlich auch mehrere Leuchtdioden **27** als Lichtquellen vorgesehen sein, die jeweils für sich über mehrere Lichtleiter **24** für eine gute Lichtverteilung sorgen.

Da bei diesem Ausführungsbeispiel elektrische Zuführungen zur Lichtleitplatte entfallen können, kann die elektrische Einheit sehr kompakt und abgeschlossen ausgebildet sein. Sie ist dann lediglich über die Lichtleiter mit der Lichtleitplatte **10** verbunden.

Nummer: 38 25 436
Int. Cl.4: G 09 F 13/20
Anmeldetag: 27. Juli 1988
Offenlegungstag: 23. März 1989

3825436

FIG. 1

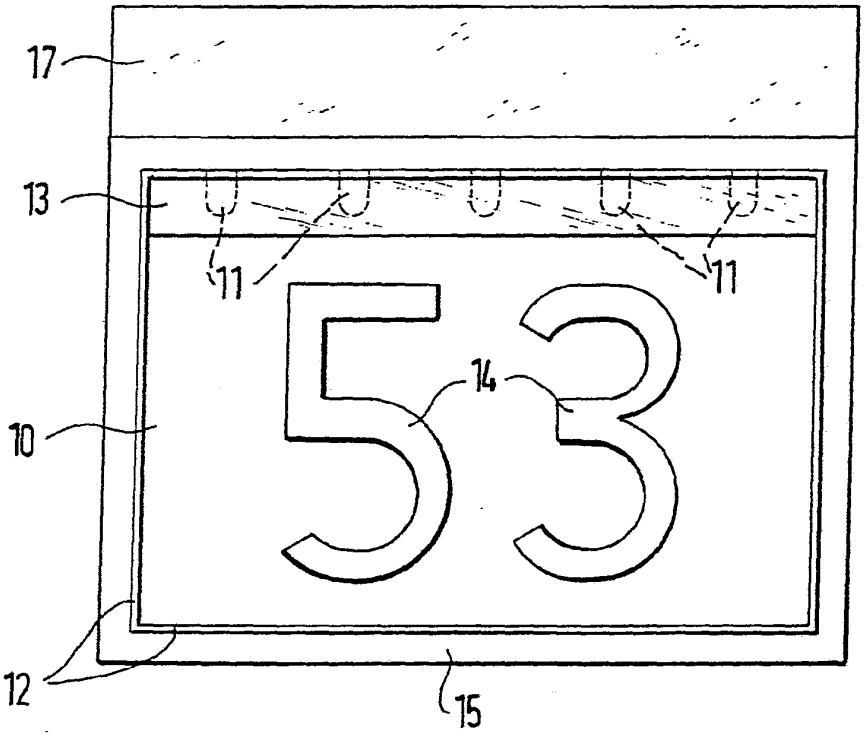

908 812/458

Fg.: 16 : 11
NACHGEREICHT

3825436

FIG. 2

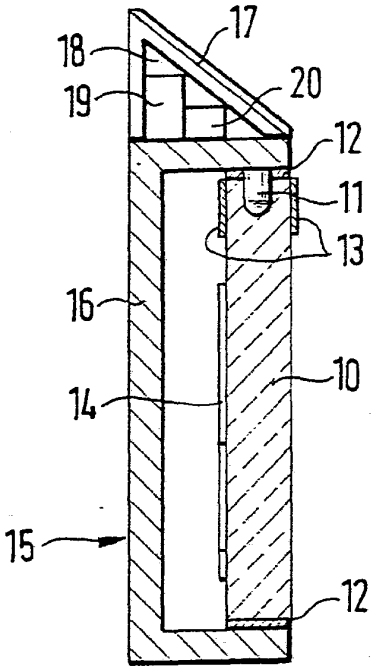

FIG. 3

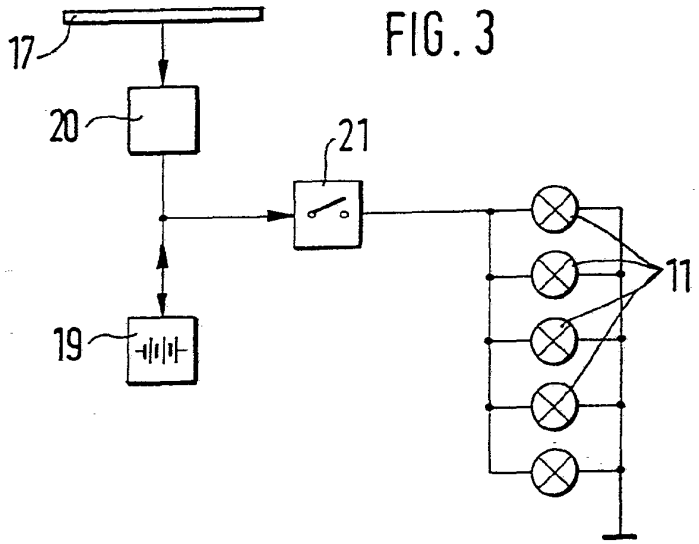

NACHGEREICHT

3825436

FIG. 4

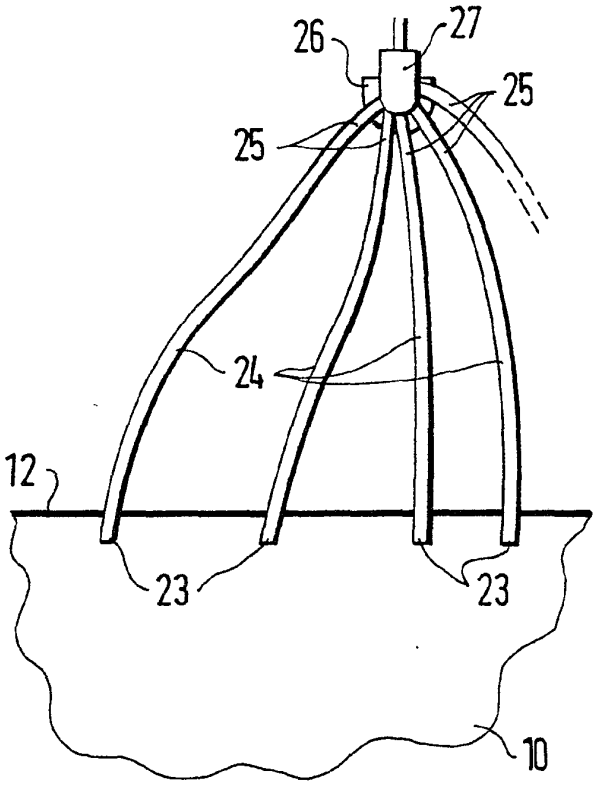

Background illumination device for flat display surface - arranges LEDs in row parallel to one side wall on circuit board, below display surface, provides convex side wall, and fills enclosed space with light-scattering transparent material

Publication number: DE4237107 (A1)

Publication date: 1994-05-05

Inventor(s): WUSTLICH HANS-DIETER [DE] +

Applicant(s): WUSTLICH HOLDING GMBH [DE] +

Classification:

- international: ***F21K99/00; F21S4/00; F21V7/00; F21V7/04; F21V8/00; F21V13/02; G09F9/00; G09F9/33; G09F13/04; G09F13/14; G09F13/18***; *F21Y101/02; F21Y105/00; G02B6/00;* **F21K99/00**; **F21S4/00**; **F21V7/00**; **F21V8/00**; **F21V13/00**; **G09F9/00**; **G09F9/33**; **G09F13/04**; **G09F13/14**; **G09F13/18**; G02B6/00; (IPC1-7): F21S5/00; F21V7/04; F21V8/00; F21V13/02; G09F9/00; G09F9/33; G09F13/04; G09F13/18

- European: G02B6/00L6I8R; F21K7/00; F21S5/00; F21V7/00; F21V7/04; G02B6/00L6O4S4; G09F13/14

Application number: DE19924237107 19921103

Priority number(s): DE19924237107 19921103

Also published as:

DE4237107 (C2)

Cited documents:

DE1022983 (B)
DE3929955 (A1)
GB387443 (A)
US4141058 (A)
WO9013885 (A1)

Abstract of **DE 4237107 (A1)**

The illumination device has an opaque circuit board (10) which supports LED chips (16) controlled via associated conductor paths, and acting as the base of a housing defined by a frame supporting the illuminated display surface (14). The LED chips lie in rows parallel to one sidewall (15) of the housing, their light outputs overlapping in the plane of the display surface. The enclosed space defined by the circuit board and the housing sides is filled with a transparent material, acting as a light dispersive body (13). ADVANTAGE - Ensures min. overall height with uniform illumination of display surface.

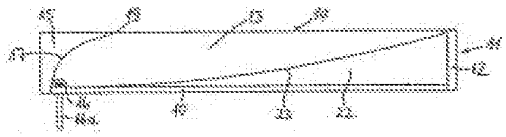

Data supplied from the ***espacenet*** database — Worldwide

(19) BUNDESREPUBLIK DEUTSCHLAND

DEUTSCHES PATENTAMT

(12) **Offenlegungsschrift**

(10) **DE 42 37 107 A 1**

(51) Int. Cl.[5]:
F 21 S 5/00
F 21 V 8/00
F 21 V 7/04
F 21 V 13/02
G 09 F 9/00
G 09 F 9/33
G 09 F 13/04
G 09 F 13/18

(21) Aktenzeichen: P 42 37 107.4
(22) Anmeldetag: 3. 11. 92
(43) Offenlegungstag: 5. 5. 94

DE 42 37 107 A 1

(71) Anmelder:
Wustlich Holding GmbH, 4134 Rheinberg, DE

(74) Vertreter:
Becker, T., Dipl.-Ing. Dr.-Ing.; Müller, K., Dipl.-Ing. Dr.-Ing., Pat.-Anwälte, 40882 Ratingen

(72) Erfinder:
Wustlich, Hans-Dieter, 4134 Rheinberg, DE

Prüfungsantrag gem. § 44 PatG ist gestellt

(54) Beleuchtungsvorrichtung, insbesondere für Flächendisplays

(57) Bei einer Beleuchtungsvorrichtung zur Ausleuchtung von Hintergrundflächen, insbesondere für Flächendisplays, mit einer lichtundurchlässigen Leiterplatte und darauf angeordneten und über Leiterbahnen ansteuerbaren Leuchtdiodenchips und mit einem Reflexionsflächen aufweisenden und die auszuleuchtende Leuchtfläche haltenden Rahmen als Gehäuse mit die Leiterplatte als Grundplatte umgebenden Seitenwänden, sollen die Bauhöhe verringert und die Ausleuchtung der Leuchtfläche verbessert werden. Hierzu ist vorgesehen, daß die Leuchtdiodenchips (16) reihenartig parallel zu einer Seitenwand (15) angeordnet sind und sich die Innenfläche (17) der den Leuchtdiodenchips (16) benachbarten Seitenwand (15) mit konvexer Ausbildung über der Reihe von Leuchtdiodenchips (16) wölbt und daß der von den Seitenwänden (15, 12) und der Leiterplatte (10) umschlossene Raum mit einer einen Streukörper (13) ausbildenden Masse aus einem lichtundurchlässigen Material ausgefüllt ist.

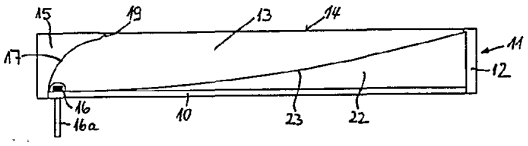

DE 42 37 107 A 1

Die folgenden Angaben sind den vom Anmelder eingereichten Unterlagen entnommen

BUNDESDRUCKEREI 03. 94 408 018/413 8/45

Beschreibung

Die Erfindung betrifft eine Beleuchtungsvorrichtung zur Ausleuchtung von Hintergrundflächen, insbesondere für Flächendisplays, mit einer lichtundurchlässigen Leiterplatte und darauf angeordneten und über Leiterbahnen ansteuerbaren Leuchtdiodenchips und mit einem Reflexionsflächen aufweisenden und die auszuleuchtende Leuchtfläche haltenden Rahmen als Gehäuse mit die Leiterplatte als Grundplatte umgebenden Seitenwänden.

Eine gattungsgemäße Beleuchtungsvorrichtung ergibt sich aus der WO 90/13885; bei einem Ausführungsbeispiel der darin beschriebenen Beleuchtungsvorrichtungen ist in einem Reflexionsflächen ausbildenden Kunststoffrahmen eine Platine als Leiterplatte mit darauf angeordneten Leuchtdiodenchips gehaltert, und dieser gegenüber ist eine durch eine Difusorfolie ausgebildete auszuleuchtende Leuchtfläche angeordnet. Die Leiterplatte ist dabei unter Aussparung der Leiterbahnen und der Leuchtdiodenchips mit einem lichtundurchlässigen Metall oder einem anderen Material abgelackt, damit das von den Leuchtdiodenchips erzeugte Licht nur in Richtung der Leuchtfläche abstrahlt. Der Rahmen umgibt und haltert die Leiterplatte mit Seitenwänden, die mit einer Neigung zur Ebene der Leiterplatte verlaufen derart, daß die Neigung von der Leiterplatte ausgehend nach außen, zum oberen Rand des Rahmens ansteigend gegeben ist. Mit dieser bekannten Bauform sollen bereits Gesamtbauhöhen der bekannten Beleuchtungsvorrichtungen von nur 2 mm bis 3 mm realisierbar sein.

Mit der bekannten Beleuchtungsvorrichtung ist der Nachteil verbunden, daß eine weitere Verringerung der Bauhöhe nicht möglich ist, weil durch das damit verbundene weitere Heranrücken der Leuchtfläche an die dieser gegenüberliegende Leiterplatte mit den lichterzeugenden Leuchtdiodenchips eine Auflösung und Verteilung des von den Leuchtdiodenchips abgestrahlten Lichts nicht mehr gegeben ist; es kommt zu einer punktförmigen Ausleuchtung der Leuchtfläche mit einer sichtbaren Übertragung der Chipanordnung auf die Leuchtfläche, die damit größere Helligkeitsdifferenzen aufweist.

Der Erfindung liegt daher die Aufgabe zugrunde, eine gattungsgemäße Beleuchtungsvorrichtung im Hinblick auf eine geringere Bauhöhe und eine gleichmäßigere Ausleuchtung der Leuchtfläche weiter zu verbessern.

Die Lösung dieser Aufgabe ergibt sich einschließlich vorteilhafter Ausgestaltungen und Weiterbildungen der Erfindung aus dem Inhalt der Patentansprüche, welche dieser Beschreibung nachgestellt sind.

Die Erfindung sieht in ihrem Grundgedanken vor, daß die Leuchtdiodenchips reihenartig parallel zu einer Seitenwand angeordnet sind und sich die Innenfläche der den Leuchtdiodenchips benachbarten Seitenwand mit konvexer Ausbildung über der Reihe von Leuchtdiodenchips und diese in der Ebene der Leuchtfläche überdeckend wölbt und daß der von Seitenwänden und Leiterplatte umschlossene Raum mit einer einen Streukörper ausbildenden Masse aus einem lichtdurchlässigen Material ausgefüllt ist.

Mit der Erfindung ist somit der Vorteil verbunden, daß eine direkte Anstrahlung der Leuchtfläche durch die Leuchtdiodenchips vermieden ist; die Ausleuchtung geschieht lediglich durch die Reflexion des von den Leuchtdiodenchips erzeugten Lichts an den die Chips übergreifenden Innenflächen der Seitenwand einschließlich deren Rand und die Abstrahlung in den aus der lichtdurchlässigen Masse bestehenden Streukörper. Die besondere, die Leuchtdiodenchips mit konvexer Formgebung überwölbende Ausgestaltung der Innenfläche der Seitenwand verbessert dabei die seitliche Abstrahlung und Ausleuchtung des Streukörpers, wobei auch bei geringerer Bauhöhe die Leuchtdiodenchips selbst durch die Seitenwand abgedeckt sind und als Lichtpunkte somit nicht in Erscheinung treten können.

Bei einer entsprechend gewünschten entsprechend großen Erstreckung der Leuchtfläche kann auch längs zweier gegenüberliegender Seitenwände je eine Reihe von Leuchtdiodenchips angeordnet sein, wobei die zugeordneten Seitenwände die erfindungsgemäße Ausbildung mit der konvexen Wölbung über den Leuchtdiodenchips aufweisen.

Nach einem Ausführungsbeispiel der Erfindung ist die Innenfläche der betreffenden Seitenwand in ihrer konvexen Wölbung mit einzelnen Stufen ansteigend ausgebildet, wobei die Winkelstellung der einzelnen Stufen zueinander jeweils zweckmäßig 5° betragen kann.

Ein weiteres Ausführungsbeispiel der Erfindung sieht vor, daß das zur Leuchtfläche weisende Ende der gewölbten Seitenwand mit einer von den Leuchtdiodenchips nach innen verlaufenden Abschrägung versehen ist, so daß hierdurch der Lichtaustritt an der auszuleuchtenden Leuchtfläche des Streukörpers verbessert ist.

Nach einem Ausführungsbeispiel der Erfindung kann es zweckmäßig sein, daß die gewölbte Seitenwand in einen sich in der Ebene der Leuchtfläche parallel zur Leiterplatte erstreckenden oberen Rand übergeht, der über die Reihe von Leuchtdiodenchips weiter übersteht, so daß die Größe der Leuchtfläche mittels der Ausbildung des Randes in einfacher Weise festlegbar ist; der Rand kann dabei ebenso wie das Ende der gewölbten Seitenwand mit einer entsprechenden Abschrägung versehen sein.

Bei einem Ausführungsbeispiel der Erfindung ist längs einer Seitenwand eine Reihe von Leuchtdiodenchips angeordnet, wobei in dem von den Seitenwänden und der Leiterplatte umschlossenen Raum ein Reflexionskörper aus lichtundurchlässigem Material angeordnet ist, dessen der Leuchtfläche zugewandte Oberfläche von den Leuchtdiodenchips ausgehend zur gegenüberliegenden Seitenwand hin ansteigt, wobei der verbleibende umschlossene Raum mit der den Streukörper ausbildenden Masse ausgefüllt ist. Mit der Anordnung eines Reflexionskörpers in dem umschlossenen Raum ist der Vorteil verbunden, daß die Größe des auszuleuchtenden Streukörpers verringert und gleichzeitig der Abstand einer zugeordneten Reflexionsfläche zu den Leuchtdiodenchips verkleinert ist, ohne daß die Leuchtfläche selbst verringert ist.

Soll die Erstreckung der Beleuchtungsvorrichtung vergrößert werden, so kann es zweckmäßig sein, längs zweier gegenüberliegender Seitenwände je eine Reihe von Leuchtdiodenchips anzuordnen, wobei die zugeordneten Seitenwände die erfindungsgemäße Ausbildung mit der konvexen Wölbung aufzuweisen haben. Der bei dieser Anordnung dann noch vorzusehende Reflexionskörper liegt dann in der Mitte zwischen den Reihen von Leuchtdiodenchips, wobei er sich von diesen ausgehend zur Mitte hin erhebt und die Oberflächen des Reflexionskörpers entsprechend schräg ansteigend ausgebildet sind.

Die Erfindung kann auch in einer zweiten Ausführungsform verwirklicht sein, bei welcher auf dem obe-

ren Rand einer Seitenwand des Rahmens in der Ebene der Leuchtfläche die streifenförmig ausgebildete Leiterplatte festgelegt ist, auf deren Innenseite in Ausrichtung zur Grundplatte die Leuchtdiodenchips reihenartig angeordnet sind und wobei der von den Seitenwänden und der Grundplatte umschlossene Raum mit einer einen Streukörper ausbildenden Masse aus einem lichtdurchlässigen Material ausgefüllt ist. Auch bei diesem Ausführungsbeispiel erfolgt keine unmittelbare Abstrahlung des von den Leuchtdiodenchips erzeugten Lichts in Punktform auf die Leuchtfläche, vielmehr sind die Leuchtdiodenchips in der Leuchtfläche selbst nicht sichtbar.

Auch bei dieser Ausführungsform kann die Anordnung der Reihe von Leuchtdiodenchips einseitig oder zweiseitig erfolgen, wie dies im Grundsatz vorstehend bereits beschrieben ist.

Bei Alternativen der Erfindung kann der Streukörper entweder aus einer Vergußmasse aus lichtdurchlässigem Material oder aber aus einem gespritzten Formteil aus lichtdurchlässigem Material bestehen.

Schließlich kann vorgesehen sein, in die den Streukörper ausbildende Masse aus einem lichtdurchlässigen Material zusätzlich Streuzentren einzulagern, die eine weitere Auflösung des punktförmig von den Leuchtdiodenchips abgestrahlten Lichts in dem Streukörper bewirken.

In der Zeichnung sind Ausführungsbeispiele der Erfindung wiedergegeben, welche nachstehend beschrieben sind. Es zeigen:

Fig. 1 eine Beleuchtungsvorrichtung im Schnitt mit einseitiger Anordnung der Leuchtdiodenchips,

Fig. 2 den Gegenstand der **Fig.** 1 mit zweiseitiger Anordnung der Leuchtdiodenchips,

Fig. 3 eine vergrößerte Darstellung der Seitenwandausbildung sowie der Leuchtdiodenchips gemäß **Fig.** 1,

Fig. 4 eine andere Ausführungsform der Beleuchtungsvorrichtung mit einseitiger Anordnung der Leuchtdiodenchips.

Wie sich aus **Fig.** 1 ergibt, besteht die Beleuchtungsvorrichtung aus einer Leiterplatte **10**, die in einem Rahmen **11** gehalten ist, der Seitenwände **12** aufweist. In dem von der Leiterplatte **10** und den Seitenwänden **12** umschlossenen Raum ist ein Streukörper **13** aus einer Vergußmasse aus lichtdurchlässigem Material angeordnet. Die freie Oberfläche des Streukörpers **13** bildet die auszuleuchtende Leuchtfläche **14** aus.

Parallel zu einer in einer noch zu beschreibenden besonderen Form ausgebildeten Seitenwand **15** ist auf der Leiterplatte **10** eine Reihe von Leuchtdiodenchips **16** angeordnet, die für die Ausleuchtung des Streukörpers **13** sorgen und über Anschlußdrähte **16a** an eine Energiequelle anschließbar sind. Bei dem dargestellten Ausführungsbeispiel ist in dem von den Seitenwänden **12** und der Leiterplatte **10** umschlossenen Raum zusätzlich ein Reflexionskörper **22** angeordnet, dessen Oberfläche **23** von den Leuchtdiodenchips **16** hin zur gegenüberliegenden Seitenwand **12** des Rahmens **11** ansteigt mit der Folge, daß der von den Leuchtdiodenchips **16** auszuleuchtende Streukörper **13** in seiner Größe vermindert ist, wobei durch die schräg ansteigende reflektierende Oberfläche **23** des Reflexionskörpers **22** die Abstrahlung des von dem Leuchtdiodenchip **16** erzeugten Lichts zur Leuchtfläche **14** hin verbessert ist.

Die den Leuchtdiodenchip **16** zugeordnete Seitenwand **15** weist an ihrer Innenfläche **17** eine konvexe Wölbung auf, mit der die Seitenwand **15** die Leuchtdiodenchips **16** übergreift, so daß durch die Seitenwand **15** die Reihe von Leuchtdiodenchips **16** in der Aufsicht auf die Leuchtfläche **14** vollständig abgedeckt ist. In seinem Übergang zur Leuchtfläche **14** ist der Rand der Seitenwand **15** mit einer Abschrägung **19** versehen, die in Richtung auf die Leuchtdiodenchips **16** geneigt ist, so daß sie die Lichtabstrahlung in die Leuchtfläche **14** verbessert.

Bei dem dargestellten Ausführungsbeispiel ist weiterhin die konvex gewölbte Innenfläche **17** der Seitenwand **15** in mit um 5° geneigten Schrägflächen ausgebildeten Stufen **20** angeordnet, so daß hier auch die Reflexionswirkung und Umlenkung des von den Leuchtdiodenchip **16** erzeugten Lichts in den seitlich davon angeordneten Streukörper **13** verbessert ist (**Fig.** 3). Bei diesem Ausführungsbeispiel geht die Seitenwand **15** in einen sich in der Ebene der Leuchtfläche **14** parallel zur Leiterplatte **10** erstreckenden oberen Rand **18** über, der sich von der Seitenwand **15** weiter über die Reihe von Leuchtdiodenchips und diese überdeckend erstreckt, wobei der obere Rand **18** an seinem an die Leuchtfläche **14** angrenzenden Ende mit der Abschrägung **19** versehen ist.

Wie sich aus **Fig.** 2 im einzelnen entnehmen läßt, kann zur Vergrößerung der Leuchtfläche **14** auch vorgesehen sein, einander gegenüberliegend an zwei Seitenwänden **15** jeweils eine Reihe von Leuchtdiodenchips **16** anzuordnen, wobei dann beide Seitenwände **15** in der beschriebenen und insbesondere in **Fig.** 3 dargestellten Formgebung ausgebildet sind; der zwischen den Seitenwänden **15** dann angeordnete Reflexionskörper **22** mit reflektierenden Oberflächen **23** ist in symmetrischer Ausbildung dann so angeordnet, daß die Flächen **23** zur Mitte hin in gleichmäßigem Anstieg verlaufen.

Wie nicht weiter dargestellt, können die Flächen **23** des Reflexionskörpers **22** sowohl gerade als auch in gebogener Ausbildung angeordnet sein.

Aus **Fig.** 4 ergibt sich eine andere Ausführungsform der Erfindung, bei welcher nun eine Seitenwand **12** eine in der Ebene der Leuchtfläche **14** liegende streifenförmige Leiterplatte **24** hält, an deren Innenseite — in Ausrichtung zu der nun nicht als Leiterplatte ausgebildeten Grundplatte **25** — eine Reihe von Leuchtdiodenchips **16** angeordnet ist; somit sind auch bei dieser Ausführungsform der Erfindung die Leuchtdiodenchips **16** bei der Aufsicht auf die Leuchtfläche **14** durch die Rückseite der lichtundurchlässigen Leiterplatte **24** vollständig abgedeckt. Auch bei dieser Ausführungsform ist in dem von den Seitenwänden **12** und der Grundplatte **25** umschlossenen Raum ein Reflexionskörper **22** angeordnet, wobei im übrigen gleiche Verhältnisse wie zu dem Ausführungsbeispiel gemäß **Fig.** 1 bis 3 beschrieben vorherrschen.

Wie nicht weiter dargestellt, kann entsprechend zu **Fig.** 2 auch die in **Fig.** 4 dargestellte Ausführungsform mit einer zweiseitigen Anordnung von streifenförmigen Leiterplatten **24** mit Leuchtdiodenchips **16** ausgebildet sein.

Die Erfindung ist nicht auf die in den Zeichnungsfiguren dargestellte Ausführung mit Reflexionskörpern **22** beschränkt; es zählt auch zur Erfindung, wenn die Reflexionskörper **22** nicht ausgebildet sind, wobei in diesem Fall dann der Streukörper **13** den gesamten von den Seitenwänden **15**, **12** und der Leiterplatte **10** beziehungsweise Grundplatte **25** umschlossenen Raum ausfüllt; dabei kann die Anordnung der Leuchtdiodenchips **16** sowohl ein- wie auch zweiseitig gewählt sein.

Die in der vorstehenden Beschreibung, den Patentansprüchen, der Zusammenfassung und der Zeichnung offenbarten Merkmale des Gegenstandes dieser Unterla-

gen können einzeln als auch in beliebigen Kombinationen untereinander für die Verwirklichung der Erfindung in ihren verschiedenen Ausführungsformen wesentlich sein.

Patentansprüche

1. Beleuchtungsvorrichtung zur Ausleuchtung von Hintergrundflächen, insbesondere für Flächendisplays, mit einer lichtundurchlässigen Leiterplatte und darauf angeordneten und über Leiterbahnen ansteuerbaren Leuchtdiodenchips und mit einem Reflexionsflächen aufweisenden und die auszuleuchtende Leuchtfläche haltenden Rahmen als Gehäuse mit die Leiterplatte als Grundplatte umgebenden Seitenwänden, **dadurch gekennzeichnet,** daß die Leuchtdiodenchips (16) reihenartig parallel zu einer Seitenwand (15) angeordnet sind und sich die Innenfläche (17) der den Leuchtdiodenchips (16) benachbarten Seitenwand (15) mit konvexer Ausbildung über der Reihe von Leuchtdiodenchips (16) und diese in der Ebene der Leuchtfläche (14) überdeckend wölbt und daß der von den Seitenwänden (15, 12) und der Leiterplatte (10) umschlossene Raum mit einer einen Streukörper (13) ausbildenden Masse aus einem lichtdurchlässigen Material ausgefüllt ist.

2. Beleuchtungsvorrichtung nach Anspruch 1, dadurch gekennzeichnet, daß die konvex gewölbte Innenfläche (17) der Seitenwand (15) mit einzelnen Stufen (20) ansteigend ausgebildet ist.

3. Beleuchtungsvorrichtung nach Anspruch 1 oder 2, dadurch gekennzeichnet, daß das an die Leuchtfläche (14) angrenzende Ende der Seitenwand (15) mit einer auf die Leuchtdiodenchips (16) zugerichteten Abschrägung (19) versehen ist.

4. Beleuchtungsvorrichtung nach einem der Ansprüche 1 bis 3, dadurch gekennzeichnet, daß die gewölbte Seitenwand (15) in einen sich in der Ebene der Leuchtfläche (14) parallel zur Leiterplatte (10) erstreckenden oberen Rand (18) übergeht, der über die Reihe von Leuchtdiodenchips (16) weiter übersteht.

5. Beleuchtungsvorrichtung nach Anspruch 4, dadurch gekennzeichnet, daß der obere Rand (18) an seinem an die Leuchtfläche (14) angrenzenden Ende mit einer auf die Leuchtdiodenchips (16) zugerichteten Abschrägung (19) versehen ist.

6. Beleuchtungsvorrichtung nach einem der Ansprüche 1 bis 3, dadurch gekennzeichnet, daß längs einer Seitenwand (15) eine Reihe von Leuchtdiodenchips (16) angeordnet ist und daß in dem umschlossenen Raum ein Reflexionskörper (22) aus einem lichtundurchlässigen Material angeordnet ist, dessen der Leuchtfläche (14) zugewandte Oberfläche (23) von den Leuchtdiodenchips (16) ausgehend zur gegenüberliegenden Seitenwand (12) hin ansteigt, wobei der verbleibende umschlossene Raum mit der den Streukörper ausbildenden Masse ausgefüllt ist.

7. Beleuchtungsvorrichtung nach einem der Ansprüche 1 bis 3, dadurch gekennzeichnet, daß längs zweier einander gegenüberliegender Seitenwände (15) je eine Reihe von Leuchtdiodenchips (16) angeordnet ist, und daß in dem umschlossenen Raum ein Reflexionskörper (22) aus einem lichtundurchlässigen Material angeordnet ist, der sich von den auf der Leiterplatte (10) angeordneten Reihen von Leuchtdiodenchips (16) aus zur Mitte des umschlossenen Raumes erhebt, wobei die Oberflächen (23) des Reflexionskörpers (22) entsprechende Schrägen ausbilden.

8. Beleuchtungsvorrichtung zur Ausleuchtung von Hintergrundflächen, insbesondere für Flächendisplays, mit keiner lichtundurchlässigen Leiterplatte und darauf angeordneten und über Leiterbahnen ansteuerbaren Leuchtdiodenchips und mit einem Reflexionsflächen aufweisenden und die auszuleuchtende Leuchtfläche sowie die Leiterplatte haltenden Rahmen, dadurch gekennzeichnet, daß auf dem oberen Rand einer Seitenwand (12) des Rahmens (11) in der Ebene der Leuchtfläche (14) die streifenförmig ausgebildete Leiterplatte (24) festgelegt ist, auf deren Innenseite in Ausrichtung zur Grundplatte (25) die Leuchtdiodenchips (16) reihenartig angeordnet sind und daß der von den Seitenwänden (12) und der Grundplatte (25) umschlossene Raum mit einer einen Streukörper (13) ausbildenden Masse aus einem lichtdurchlässigen Material ausgefüllt ist.

9. Beleuchtungsvorrichtung nach Anspruch 8, dadurch gekennzeichnet, daß in dem umschlossenen Raum ein Reflexionskörper (23) aus lichtundurchlässigem Material angeordnet ist, dessen der Leuchtfläche (14) zugewandte Oberfläche (23) von dem den Leuchtdiodenchips (16) gegenüberliegenden Rand der Grundplatte (25) zu der diesem gegenüberliegenden Seitenwand (12) hin ansteigt.

10. Beleuchtungsvorrichtung nach Anspruch 8, dadurch gekennzeichnet, daß längs jeweils einander gegenüberliegender Seitenwände (12) jeweils eine streifenförmige Leiterplatte (24) mit daran angeordneten Reihen von Leuchtdiodenchips (16) vorgesehen ist und daß in dem umschlossenen Raum ein Reflexionskörper (22) aus lichtundurchlässigem Material angeordnet ist, der sich von den den Leuchtdiodenchips (16) gegenüberliegenden Rändern der Grundplatte (25) aus zur Mitte der Leuchtfläche (14) hin erhebt.

11. Beleuchtungsvorrichtung nach einem der Ansprüche 1 bis 10, dadurch gekennzeichnet, daß der Streukörper (13) aus einer Vergußmasse aus lichtdurchlässigem Material besteht.

12. Beleuchtungsvorrichtung nach einem der Ansprüche 1 bis 10, dadurch gekennzeichnet, daß der Streukörper (13) aus einem gespritzten Formteil aus einem lichtdurchlässigen Material besteht.

13. Beleuchtungsvorrichtung nach einem der Ansprüche 1 bis 12, dadurch gekennzeichnet, daß in die den Streukörper (13) ausbildende Masse Streuzentren eingelagert sind.

Hierzu 1 Seite(n) Zeichnungen

– Leerseite –

Nummer: DE 42 37 107 A1
Int. Cl.[5]: F 21 S 5/00
Offenlegungstag: 5. Mai 1994

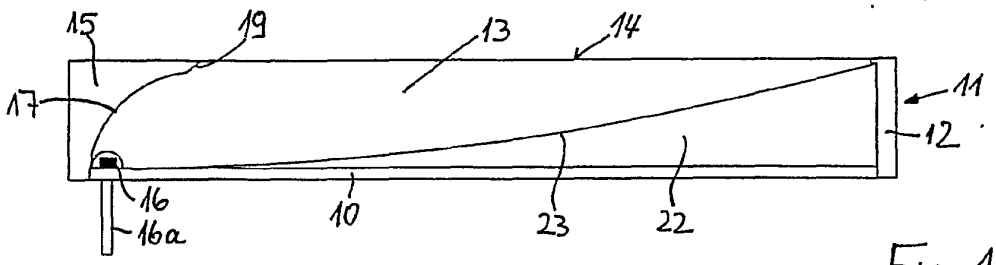

Fig. 1

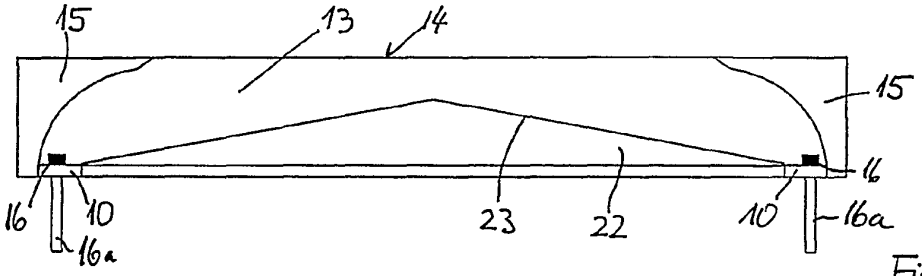

Fig. 2

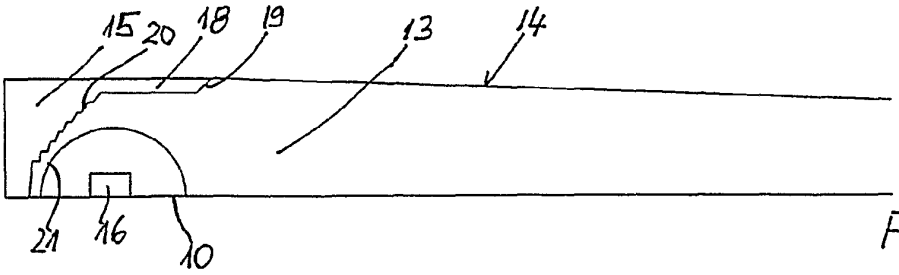

Fig. 3

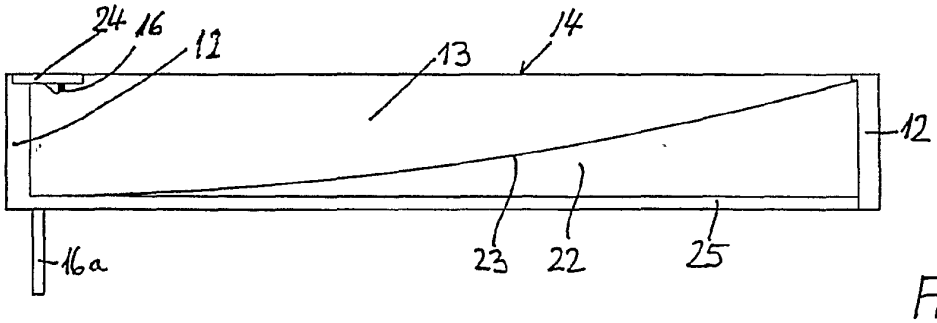

Fig 4

LIGHTING APPARATUS

Publication number: DE60037427 (T2)
Publication date: 2009-02-05
Inventor(s): PELKA DAVID G [US]; PARKYN WILLIAM A [US]; POPOVICH MICHAEL J [US]; PELKA ERIC D [US]; POPOVICH JOHN M [US] +
Applicant(s): CHI MEI OPTOELECTRONICS CORP [TW] +
Classification:
- international: ***F21S2/00; F21S8/04; F21S4/00; F21V3/02; F21V5/02; F21V5/04; F21V7/00; F21V7/04; F21V13/12; F21V21/08; F21V21/088; F21V23/06;*** *F21V7/22; F21Y101/02;* **F21S2/00; F21S8/04; F21S4/00; F21V3/00; F21V5/00; F21V7/00; F21V13/00; F21V21/08; F21V23/00**
- European: G02B5/02; F21S4/00A; F21V5/02; F21V7/00T; F21V21/08; F21V23/06; G02B6/00L6I4R; G02B6/00L6I4S4
Application number: DE20006037427T 20000629
Priority number(s): US19990144920P 19990721; WO2000US18002 20000629

Also published as:
WO0107828 (A1)
JP2003505835 (T)
EP1200772 (A1)
EP1200772 (B1)
CA2402037 (A1)
more >>

Abstract not available for DE 60037427 (T2)
Abstract of corresponding document: **WO 0107828 (A1)**

An illumination apparatus (100) provides an output with high spatial uniformity of luminance. The illumination apparatus includes a cavity that has reflective surfaces (150, 160) and an output area. At least one light source is disposed in the cavity, with the light source including a point source (such as an LED (174)) and an optical diverter (110) having a flared (e.g., cuspated) reflecting surface. Light from the point source is distributed by the optical diverter towards the reflective surfaces within the cavity. Before exiting the device, light passes through an optical conditioning element that is positioned over the output area of the cavity. The optical conditioning element includes at least a diffuser (180), such as a translucent film or plastic sheet (190, 194), and preferably also includes one or more prism sheets such as a brightness-enhancing film.

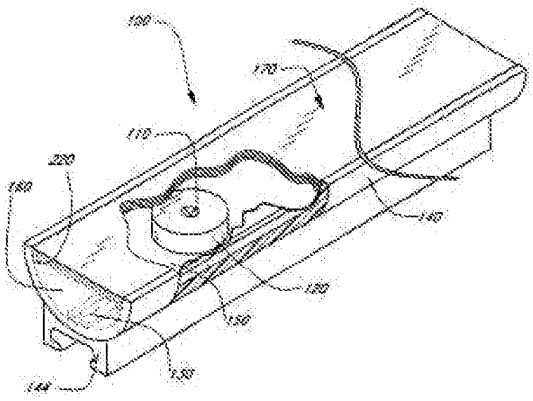

Data supplied from the ***espacenet*** database — Worldwide

(19) Bundesrepublik Deutschland
Deutsches Patent- und Markenamt

(10) **DE 600 37 427 T2** 2009.02.05

(12) # Übersetzung der europäischen Patentschrift

(97) **EP 1 200 772 B1**
(21) Deutsches Aktenzeichen: **600 37 427.0**
(86) PCT-Aktenzeichen: **PCT/US00/18002**
(96) Europäisches Aktenzeichen: **00 948 548.3**
(87) PCT-Veröffentlichungs-Nr.: **WO 2001/007828**
(86) PCT-Anmeldetag: **29.06.2000**
(87) Veröffentlichungstag der PCT-Anmeldung: **01.02.2001**
(97) Erstveröffentlichung durch das EPA: **02.05.2002**
(97) Veröffentlichungstag der Patenterteilung beim EPA: **12.12.2007**
(47) Veröffentlichungstag im Patentblatt: **05.02.2009**

(51) Int Cl.[8]: ***F21S 2/00*** (2006.01)
F21V 23/06 (2006.01)
F21V 21/088 (2006.01)
F21Y 101/02 (2006.01)

(30) Unionspriorität:
144920 P 21.07.1999 US

(84) Benannte Vertragsstaaten:
AT, BE, CH, CY, DE, DK, ES, FI, FR, GB, GR, IE, IT, LI, LU, MC, NL, PT, SE

(73) Patentinhaber:
Chi Mei Optoelectronics Corp., Tainan, TW

(74) Vertreter:
Meissner, Bolte & Partner GbR, 80538 München

(72) Erfinder:
PELKA, David G., Los Angeles, CA 90045, US;
PARKYN, William A., Lomita, CA 90717, US;
POPOVICH, Michael J., Del Mar, CA 92014, US;
PELKA, Eric D., Los Angeles, CA 90045, US;
POPOVICH, John M., Solana Beach, CA92075, US

(54) Bezeichnung: **BELEUCHTUNGSVORRICHTUNG**

Anmerkung: Innerhalb von neun Monaten nach der Bekanntmachung des Hinweises auf die Erteilung des europäischen Patents kann jedermann beim Europäischen Patentamt gegen das erteilte europäische Patent Einspruch einlegen. Der Einspruch ist schriftlich einzureichen und zu begründen. Er gilt erst als eingelegt, wenn die Einspruchsgebühr entrichtet worden ist (Art. 99 (1) Europäisches Patentübereinkommen).

Die Übersetzung ist gemäß Artikel II § 3 Abs. 1 IntPatÜG 1991 vom Patentinhaber eingereicht worden. Sie wurde vom Deutschen Patent- und Markenamt inhaltlich nicht geprüft.

Beschreibung

BELEUCHTUNGSVORRICHTUNG

Gebiet der Erfindung

[0001] Die vorliegende Erfindung betrifft allgemein das Gebiet von Beleuchtungsvorrichtungen und insbesondere unaufdringliche Vorrichtungen, die Punktlichtquellen, wie etwa Leuchtdioden zur Beleuchtung verwenden. Insbesondere betrifft die Erfindung eine Beleuchtungsvorrichtung gemäß der Definition im Oberbegriff von Anspruch 1. Eine solche Beleuchtungsvorrichtung ist beispielsweise aus der US-A-5 438 495 bekannt.

Beschreibung des Stands der Technik

[0002] Unaufdringliche Beleuchtungsvorrichtungen sind bei einer Vielfalt von Anwendungen, wie etwa als dekorative Leuchtleisten oder Anzeigetafelbeleuchtungen nützlich. Eine übliche Form von Leuchtleisten verwendet Neonröhren. Neonröhren haben den Vorteil, daß sie leicht sind und sich für dekorative Beleuchtung eignen. Ferner ist Lichtabgabe von Neonröhren relativ diffus und gleichmäßig im Erscheinungsbild. Neonröhren sind jedoch zerbrechlich, erfordern eine hohe Spannung und erzeugen erhebliche Hochfrequenzstörungen (HF-Störungen), die häufig eine recht teure Abschirmung erfordern. Fluoreszenzbeleuchtung ist ebenfalls diffus, ist jedoch im allgemeinen auf geringe Längen beschränkt und weist typischerweise unschöne elektrische Anschlüsse auf.

[0003] Die Anzeigetafelbeleuchtung wird häufig bewerkstelligt, indem Lichtquellen hinter der Tafel plaziert werden, um sie zu beleuchten. Eine Diffusorbox, die eine Lichtquelle enthält, kann eine recht gleichmäßige Lichtabgabe erzeugen, wenn die Lichtquellen von der Anzeigetafel ausreichend weit entfernt sind. Dies macht jedoch die Vorrichtungen sperrig. Wenn die Lichtquellen zu nahe bei der Tafel sind, ist die Beleuchtung nicht mehr gleichmäßig, und die Lichtquellen werden als "helle Flecken" gesehen. Es besteht also ein Bedarf für eine kompakte Beleuchtungsvorrichtung, die eine gleichmäßige Abgabeintensität ermöglicht.

[0004] Der Stand der Technik gemäß der US-A-5 438 495 beschreibt eine Lichteinrichtung, die bevorzugt in die Oberfläche einer Start-/Landebahn eingebettet ist und eine Lichtquelle mit einem Reflektor sowie einer begrenzenden Lichtöffnung in dem Lichtfeld aufweist. In der herkömmlichen Vorrichtung ist eine Spiegeleinrichtung zum Reflektieren eines Teils des Lichtfelds zu dem Reflektor hin angeordnet, um dieses Licht nach einer weiteren Reflexion durch die Lichtöffnung auszusenden. In der herkömmlichen Vorrichtung ist eine optische Ablenkeinrichtung vorgesehen, die nur ungefähr die Hälfte der Lichtquelle bedeckt und die zu einer Seite der Lichtquelle versetzt ist. Die optische Ablenkeinrichtung hat also eine asymmetrische Konfiguration.

Zusammenfassung der Erfindung

[0005] Die der vorliegenden Anmeldung zugrundeliegende Aufgabe ist es daher, eine Beleuchtungsvorrichtung anzugeben, die eine kompakte Konfiguration hat und eine gleichmäßige Lichtabgabeintensität ermöglicht.

[0006] Gemäß der Erfindung wird diese Aufgabe mit einer Beleuchtungsvorrichtung gemäß der Definition in Anspruch 1 gelöst. Vorteilhafte Weiterentwicklungen der Beleuchtungsvorrichtung gemäß der Erfindung sind in den verschiedenen Unteransprüchen angegeben.

[0007] Gemäß einem Aspekt der Erfindung weist eine Beleuchtungsvorrichtung einen Hohlraum auf, der Reflexionsoberflächen und einen Ausgangsbereich sowie mindestens eine Lichtquelle hat, die in dem Hohlraum angeordnet ist, wobei die Lichtquelle eine Punktlichtquelle und eine optische Ablenkeinrichtung aufweist, die eine konisch erweiterte reflektierende Oberfläche hat. Die Vorrichtung weist ferner ein optisches Konditionierungselement über dem Ausgangsbereich auf, wobei das optische Konditionierungselement mindestens einen Diffusor aufweist, beispielsweise eine lichtdurchlässige Folie oder einen Kunststoff-Flächenkörper.

[0008] Bei einer bevorzugten Ausführungsform ist die konisch erweiterte Oberfläche gekrümmt und kann eine Cusp-Form besitzen. Bei einer Ausführungsform weist die Punktlichtquelle eine LED auf. Bei einer bevorzugten Ausführungsform sind die reflektierenden Oberflächen des Hohlraums diffus reflektierend.

[0009] Gemäß einem anderen Aspekt der Erfindung weist die Beleuchtungsvorrichtung ein Gehäuse auf, das einen Hohlraum aufweist, der Reflexionsoberflächen und eine Ausgangsöffnung hat. Die Vorrichtung weist ferner ein optisches Konditionierungselement über der Ausgangsöffnung auf, wobei das Konditionierungselement mindestens einen Flächenkörper aufweist, der eine Vielzahl von Pixeln hat. Die Vorrichtung weist ferner mindestens eine Lichtquelle auf, die in dem Hohlraum unmittelbar unter dem Konditionierungselement angeordnet ist, wobei die (mindestens eine) Lichtquelle eine Punktlichtquelle aufweist, die um weniger als 3,5 inch von dem Flächenkörper beabstandet ist, der die Reflexionsoberflächen beleuchtet, so daß das Verhältnis der Leuchtdichte von benachbarten Pixeln zwischen 0,95 und 1,05 ist und so daß das Verhältnis der Leuchtdichte von nicht benachbarten Pixeln zwischen 0,5 und 2,0 ist, so daß

das Erscheinungsbild der Beleuchtung an dem Flächenkörper im wesentlichen gleichmäßig ist.

[0010] Bei einer bevorzugten Ausführungsform weist das optische Konditionierungselement einen Diffusorflächenkörper auf, der unter dem Prismenflächenkörper angeordnet ist. Bei einer bevorzugten Ausführungsform weist das optische Konditionierungselement einen zweiten Prismenflächenkörper mit einer Orientierung von 90° zu dem ersten Prismenflächenkörper auf. Bei einer bevorzugten Ausführungsform weist die (mindestens eine) Lichtquelle eine Punktlichtquelle und eine Linse mit innerer Totalreflexionslinse auf, die eine cuspförmige Oberfläche zum Reflektieren von Licht von der Punktlichtquelle auf die streuenden Reflexionsoberflächen hat.

[0011] Gemäß einem anderen Aspekt der Erfindung weist eine Beleuchtungsvorrichtung einen aus einem reflektierenden Material gebildeten Hohlraum auf, wobei der Hohlraum einen Ausgangsbereich hat. Ein optisches Konditionierungselement befindet sich an dem Ausgangsbereich. Die Vorrichtung weist ferner eine Lichtquelle in dem Hohlraum auf, wobei die Lichtquelle eine Punktlichtquelle und eine optische Ablenkeinrichtung aufweist, die eine reflektierende Oberfläche hat, die teilweise reflektierend und teilweise durchlässig ist.

[0012] Die Reflexionsoberfläche der Ablenkeinrichtung ermöglicht es, daß ein Anteil von darauf fallendem Licht durch die reflektierende Oberfläche hindurchgeht, während sie gleichzeitig einen anderen Anteil des auf das reflektierende Material des Hohlraums fallenden Lichts reflektiert. Das reflektierende Material reflektiert Licht innerhalb des Hohlraums, so daß der Ausgangsbereich und das optische Konditionierungselement beleuchtet werden. Bei einer bevorzugten Ausführungsform besteht die reflektierende Oberfläche der Ablenkeinrichtung aus Streuzentren, die darauf fallendes Licht streuen.

[0013] Gemäß noch einem anderen Aspekt der Erfindung weist eine Beleuchtungsvorrichtung eine optische Ablenkeinrichtung auf. Die Ablenkeinrichtung weist ein transparentes Material auf, das eine reflektierende Oberfläche hat, die von einer Brechungsgrenzfläche gebildet ist, die für eine innere Totalreflexion von Licht von einer Punktlichtquelle konfiguriert ist, die so positioniert ist, daß sie einen ersten Anteil von Lichtstrahlen zu der reflektierenden Oberfläche hin abstrahlt und einen zweiten Anteil von Lichtstrahlen zu einer seitlichen Oberfläche der Ablenkeinrichtung hin abstrahlt. Die Ablenkeinrichtung weist eine Brechungsgrenzfläche auf, die den zweiten Anteil von Lichtstrahlen zu der reflektierenden Oberfläche hin bricht, so daß sowohl der erste als auch der zweite Anteil von Lichtstrahlen von der reflektierenden Oberfläche reflektiert werden.

[0014] Gemäß noch einem weiteren Aspekt der Erfindung ist eine optische Ablenkeinrichtung vorgesehen, die ein transparentes Material aufweist, das eine konisch erweiterte reflektierende Oberfläche hat, die von einer Brechungsgrenzfläche gebildet ist. Die Grenzfläche ist für eine innere Totalreflexion von Licht von einer Punktlichtquelle konfiguriert, die einem Scheitel der konisch erweiterten reflektierenden Oberfläche benachbart positioniert ist und Lichtstrahlen für die Reflexion durch die reflektierende Oberfläche abstrahlt.

[0015] Gemäß einem weiteren Aspekt der Erfindung weist die Beleuchtungsvorrichtung einen Hohlraum auf, der Reflexionsoberflächen und einen Ausgangsbereich besitzt. Die Vorrichtung weist ferner mindestens eine Lichtquelle auf, die in dem Hohlraum angeordnet ist, wobei die Lichtquelle eine Punktlichtquelle und eine optische Ablenkeinrichtung aufweist, die eine Oberfläche hat, die teilweise reflektierend und teilweise durchlässig ist.

[0016] Die Vorrichtung weist ferner ein optisches Konditionierungselement über dem Ausgangsbereich auf, wobei das optische Konditionierungselement einen Diffusor aufweist, wobei die Ablenkeinrichtung zwischen der Punktlichtquelle und dem optischen Konditionierungselement so positioniert ist, daß (a) ein Anteil von Licht, das von der Punktlichtquelle abgestrahlt wird, von der Ablenkeinrichtung zu den Reflexionsoberflächen des Hohlraum hin reflektiert wird, und (b) ein anderer Anteil von Licht, das von der Punktlichtquelle abgestrahlt wird, durch die Oberfläche der Ablenkeinrichtung zu dem optischen Konditionierungselement hin durchgelassen wird, wobei die Ablenkeinrichtung so dimensioniert ist, daß sie es ermöglicht, daß zumindest ein erheblicher Anteil des reflektierten Lichts das optische Konditionierungselement erreicht, ohne durch die Ablenkeinrichtung hindurchzugehen, und wobei die Ablenkeinrichtung und die Reflexionsoberflächen des Hohlraums so angeordnet sind, daß sie es ermöglichen, daß zumindest ein erheblicher Anteil des durchgelassenen Lichts das optische Konditionierungselement erreicht, ohne eine Reflexion zu erfahren.

Kurze Beschreibung der Zeichnungen

[0017] Fig. 1 zeigt eine erste Ausführungsform einer unaufdringlichen Beleuchtungsvorrichtung, wobei das Gehäuse teilweise weggeschnitten ist, um eine der Punktlichtquellen und der darin befindlichen optischen Ablenkeinrichtungen sichtbar zu machen.

[0018] Fig. 2 ist eine Explosionsansicht der in Fig. 1 gezeigten Ausführungsform.

[0019] Fig. 3 zeigt eine andere Ausführungsform einer unaufdringlichen Beleuchtungsvorrichtung.

[0020] Fig. 4 ist eine Explosionsansicht der in Fig. 3 gezeigten Ausführungsform.

[0021] Fig. 5A und Fig. 5B sind eine Endansicht bzw. eine Draufsicht auf einen Montagekanal, der einen Schlitz zur Montage der Ausführungsform der Fig. 1 bis Fig. 2 oder der Fig. 3 bis Fig. 4 an der Montagehalterung der Fig. 6A und Fig. 6B hat.

[0022] Fig. 6A und Fig. 6B sind eine Ansicht bzw. eine Draufsicht auf eine Montagehalterung, die an einer mechanischen Konstruktion, wie etwa einem Gebäude befestigt ist und den Montagekanal der Fig. 5A und Fig. 5B aufnimmt, um die unaufdringliche Beleuchtungsvorrichtung an dem Gebäude anzubringen.

[0023] Fig. 7A und Fig. 7B zeigen eine Hülse zum mechanischen und elektrischen Koppeln von zwei Beleuchtungsvorrichtungen.

[0024] Fig. 7C zeigt eine elektrische Anordnung zum Koppeln von Energie an ein Ende einer Beleuchtungsvorrichtung.

[0025] Fig. 8 zeigt eine optische Ablenkeinrichtung, die eine innere Totalreflexion nutzt, um Licht von einer Leuchtdiode oder einer anderen Punktlichtquelle seitlich abzulenken.

[0026] Fig. 9, Fig. 10 und Fig. 11 zeigen die Progression von Lichtstrahlen durch die optische Ablenkeinrichtung gemäß Fig. 8.

[0027] Fig. 12 zeigt eine optische Ablenkeinrichtung, die einen stark kollimierten "äquatorialen" Ausgangsstrahl erzeugt.

[0028] Fig. 13 zeigt die Progression von Lichtstrahlen durch eine optische Ablenkeinrichtung, die Streuzentren an ihrer oberen Oberfläche hat, um etwas Licht durch die obere Oberfläche diffus durchzulassen.

[0029] Fig. 14 zeigt eine optische Ablenkeinrichtung, die eine aufgerauhte Oberflächenstruktur in Form eine Serie von konzentrischen Ringen an ihrer oberen Oberfläche hat, um etwas Licht durch die obere Oberfläche diffus durchzulassen.

[0030] Fig. 15 zeigt eine Ausführungsform einer Beleuchtungsvorrichtung in Form eines alphanumerischen Zeichens.

Genaue Beschreibung der bevorzugten Ausführungsformen

[0031] Eine bevorzugte Ausführungsform einer Beleuchtungsvorrichtung **100**, die in Fig. 1 gezeigt ist, weist folgendes auf: eine Vielzahl von Lichtquellen, die jeweils eine Punktlichtquelle, wie etwa eine Leuchtdiode (LED) **174** gemäß Fig. 8 aufweisen, und eine optische Ablenkeinrichtung **110**. Licht von der LED **174** wird von der optischen Ablenkeinrichtung **110** empfangen, die das Licht zur Seite und nach unten umlenkt. Die Vielzahl von LEDs sind durch eine Leiterplatte **130** elektrisch miteinander gekoppelt (ein Kabelbaum ist eine alternative Konfiguration).

[0032] Die Punktlichtquellen **174** und die optischen Ablenkeinrichtungen **110** sind in einem langgestreckten Hohlraum angebracht, der von einem Flächenkörper **150** aus diffus reflektierendem Material in der allgemeinen Form eines Halb- oder Hemizylinders gebildet ist. Der Flächenkörper **150** ist in einem Gehäuse **140**, das ein Strangpreßteil sein kann, angebracht und erstreckt sich über seine Länge. Das Gehäuse **140** ist allgemein langgestreckt und hat eine Breite, die nicht wesentlich größer als die Breite des Lichtausgangsbereichs ist. Die Leiterplatte **130** ist zwischen dem Flächenkörper **150** und dem Boden des Gehäuses **140** angeordnet. Drähte (nicht gezeigt) verlaufen durch den Flächenkörper **150**, um die Punktlichtquellen mit der Leiterplatte elektrisch zu verbinden.

[0033] Ein Montagekanal **144** kann am Boden des Gehäuses **140** zur Anbringung der Vorrichtung **100** an einem Gebäude vorgesehen sein. Der Montagekanal **144** kann beispielsweise aus Acryl bestehen, das mit dem Gehäuse **140** verbunden oder verklebt ist, oder der Kanal **144** kann mit dem Gehäuse **140** als Teil eines Strangpreßvorgangs integral ausgebildet sein. Das Licht, das aus den Ablenkeinrichtungen **110** austritt, wird reflektiert von dem diffus reflektierenden Flächenkörper **150**, der zwischen den optischen Ablenkeinrichtungen **110** und der Leiterplatte **130** angeordnet ist, sowie von diffus reflektierenden Endkappen **160**, die an jedem Ende der Vorrichtung **100** mit dem Gehäuse **140** verbunden sind.

[0034] Wenn eine Vielzahl von optischen Ablenkeinrichtungen **110** entlang der Längsachse des Hohlraums linear angeordnet sind, ist die maximale Trennung zwischen benachbarten optischen Ablenkeinrichtungen **110** bevorzugt ungefähr gleich der doppelten Breite der Vorrichtung **100**. Ferner sind die optischen Ablenkeinrichtungen **110** bevorzugt um mindestens 0,5 inch voneinander getrennt.

[0035] Die Oberflächen des diffus reflektierenden Flächenkörpers **150** und der diffus reflektierenden Endkappen **160** sind bevorzugt mattweiß mit einem streuenden Reflexionsvermögen über 90%, bevorzugt 96% oder mehr. Zu diesem Zweck können der Flächenkörper **150** und die Kappen **160** mit diffus reflektierendem Band, wie etwa DRP™ Backlight Reflector (W. L. Gore & Associates), weißer Farbe oder ausgefalleneren Materialien, wie etwa der Spectraflect-Farbe von Labsphere Corporation beschichtet

werden. Das Reflexionsvermögen der Spectraflect-Farbe beträgt 98%, was erheblich höher ist als das Reflexionsvermögen von Hausfarbe, die ungefähr 92% beträgt.

[0036] Der DRP™ Backlight Reflector hat ein Reflexionsvermögen von ungefähr 97% bis 99,5%. Alternativ können der diffus reflektierende Flächenkörper **150** und die diffus reflektierenden Kappen **160** aus einem diffus (oder spiegelnd) reflektierendem Material, wie etwa Titandioxid, pigmentiertem Lexan™-Polycarbonat oder Spectralon™- Kunststoff hergestellt sein, so daß das Erfordernis vermieden wird, eine separate Beschichtung auf den Flächenkörper **150** und die Endkappen **160** aufzubringen. Das Reflexionsvermögen von Spectralon™-Kunststoff ist ungefähr 99%.

[0037] Es wird zwar bevorzugt, daß die Reflexionsoberflächen **150**, **160** diffus reflektierend sind, bei einer alternativen Ausführungsform weisen diese Oberflächen jedoch spiegelnd reflektierende Oberflächen auf, die bevorzugt, wie bei einem von 3M unter dem Namen Visible Mirror Film (spiegelnd oder diffus) vertriebenen Produkt, facettiert sind. Während der Hohlraum der bevorzugten Ausführungsform gasgefüllt ist (mit Luft), kann der Hohlraum außerdem auch von einer Flüssigkeit oder einem Festkörper gebildet sein.

[0038] Licht tritt durch einen Flächenkörperelement- oder Folienstapel **170**, der dem diffus reflektierenden Flächenkörper **150** zugewandt ist, aus der Vorrichtung **100** aus. Wie Fig. 2 zeigt, ist das Flächenkörperelement **170** als die Ausgangsfläche der Vorrichtung **100** wirksam und weist ein optisches Konditionierungselement **210** auf, das mit einer durchlässigen äußeren Schutzabdeckung **200** bedeckt sein kann. Das optische Konditionierungselement **210** weist (in der Richtung von Licht, das sich durch das Flächenkörperelement **170** nach außen ausbreitet) einen oder mehrere Materialflächenkörper, die im wesentlichen parallel zueinander sind, nämlich einen Diffusor **180**, einen fakultativen ersten Prismenflächenkörper **190** und einen fakultativen zweiten Prismenflächenkörper **194**.

[0039] Der Diffusor **180** dient dazu, die Richtung des auf ihn fallenden Lichts zu randomisieren, und hat bevorzugt eine relativ geringe Rückstreuung. Der Diffusor **180** kann beispielsweise jede Konstruktion sein, die Licht streut, wie etwa lichtdurchlässige Kunststoff-Flächenkörper oder Kunststoff mit einer rauhen Oberfläche. Die Prismenflächenkörper **190** und **194** können jeweils eine die Helligkeit steigernde Folie (BEF) zum Reduzieren des Raumwinkels des Lichts mit einer Winkelabstrahlung im Bereich von 50° bis 80° Halbwertsbreite (FWJM) haben. Die Helligkeit steigernde Folien, die zur Verwendung bei den bevorzugten Ausführungsformen geeignet sind, sind im Handel von 3M Corporation erhältlich.

[0040] Eine die Helligkeit steigernde Dünnschicht (BEF-Dünnschicht), die lineare pyramidenförmige Strukturen darin hat, ist in dem US-Patent 5 684 354 von Gleckman beschrieben, das hier summarisch eingeführt wird. Bevorzugt schneiden sich die sich wiederholenden Strukturen der Flächenkörper **190** und **194** allgemein unter einem 90°-Winkel in bezug aufeinander, und sie sind jeweils unter 45° in bezug auf die Längsachse des langgestreckten Gehäuses **140** orientiert.

[0041] Der Diffusor **180** und die Prismenflächenkörper **190** und **194** des optischen Konditionierungselements **210** verbreiten das Licht gleichmäßig über die Ausgangsfläche der Vorrichtung **100**. Die Prismenflächenkörper dienen ferner dazu, die optische Energie innerhalb eines Gesichtsfelds zu konzentrieren, und dies bewirkt, daß das Licht intensiver in Richtung eines Beobachters innerhalb dieses Felds gerichtet wird. Es wird zwar bevorzugt, daß der Diffusor **180** unter den Prismenflächenkörpern **190** und **194** angeordnet ist (wie in Fig. 2 gezeigt ist), es versteht sich jedoch, daß die Position des Diffusors und der Prismenflächenkörper ausgetauscht werden kann.

[0042] Das optische Konditionierungselement **210** und die Punktlichtquelle **174** sind bevorzugt um weniger als 3,5 inch, stärker bevorzugt um weniger als 2,5 inch und noch stärker bevorzugt um weniger als 1,5 inch voneinander getrennt. Die äußere Schutzabdeckung **200** schützt die Vorrichtung **100** vor der Umgebung und kann als Farbfilter wirken oder abgedunkelte oder beleuchtete Bereiche eines speziellen Musters, wie etwa eines Logos, eines Designs oder alphanumerischer Zeichen enthalten.

[0043] Wie Fig. 2 zeigt, sind die Punktlichtquellen **174**, wie etwa die LEDs unmittelbar unter den optischen Ablenkeinrichtungen **110** angeordnet. Elektrische Leitungen (nicht gezeigt) von den Punktlichtquellen **174** sind mit der Leiterplatte **130** verbunden, wobei in den Flächenkörper **150** Löcher zur Aufnahme der Leitungen der LEDs **174** gestanzt sind, so daß der Flächenkörper zwischen den LEDs und der Leiterplatte positioniert ist. Das Gehäuse **140** weist Lippen oder Flansche **220** auf, um den diffus reflektierenden Flächenkörper **150** in seiner Lage zu halten.

[0044] Der Flächenkörper **150** (und die LEDs **174** und die Leiterplatte **130**, an welcher der Flächenkörper **150** angebracht ist) ist vorteilhafterweise flexibel, so daß er unter die Lippen **220** geschoben werden kann, was es dem Flächenkörper **150** ermöglicht, auf natürliche Weise eine Gestalt anzunehmen, die im Querschnitt typischerweise parabelförmig ist. Wenn der Flächenkörper **150** einen parabelförmigen Querschnitt annimmt, wird von dem Flächenkörper reflek-

tiertes Licht effizient zu dem optischen Konditionierungselement **210** hin gerichtet.

[0045] Eine alternative bevorzugte Ausführungsform ist in den Fig. 3 und Fig. 4 gezeigt. Bei dieser Ausführungsform weist eine Vorrichtung **230** ein Gehäuse **240** von zylindrischer Gestalt auf, das sowohl als Gehäuse als auch als äußere Schutzabdeckung wirksam ist. Das Flächenkörperelement **170** ist an einem Paar von Lippen oder Flanschen **244** befestigt, die entlang der Länge der Vorrichtung **230** verlaufen. (Die Flansche **244** können auch ebenso wie die Lippen **220** von Fig. 2 wirksam sein, um den reflektierenden Flächenkörper **150** in seiner Lage zu halten.)

[0046] Die Vorrichtung **230** ist sonst ihrem Gegenstück **100** der Fig. 1 bis Fig. 2 im wesentlichen ähnlich, und gleichartige Teile sind mit den gleichen Bezugszeichnen versehen. Das Gehäuse **240** kann gefärbt sein oder abgedunkelte Bereiche aufweisen, um einen gewünschten visuellen Effekt zu erzeugen. Alternativ können separate Elemente oder Folienschichten (nicht gezeigt), die zwischen dem Konditionierungselement **170** und dem Gehäuse **240** angeordnet sind, verwendet werden, um einen gewünschten optischen Effekt zu erzielen. Solche Elemente können auch in Verbindung mit der in den Fig. 1 und Fig. 2 gezeigten Ausführungsform verwendet werden.

[0047] Ein Aspekt der in den Fig. 1 bis Fig. 2 und den Fig. 3 bis Fig. 4 gezeigten Ausführungsformen ist, daß die Intensität von Licht, das aus dem optischen Konditionierungselement **210** austritt, räumlich sehr gleichmäßig ist und somit für einen Beobachter der Eindruck entsteht, daß es eine konstante Leuchtdichte über das gesamte Element **210** hat.

[0048] Diese Gleichmäßigkeit kann unter Bezugnahme auf ein imaginäres Gitter aus 1 mm^2 "Pixeln" an der Ausgangsseite des optischen Konditionierungselements **210** quantitativ bestimmt werden. In den vorliegenden Unterlagen bedeutet der Begriff "Pixel" jede Quadratmillimeter-Zelle, die von einem imaginären Gitter an der Ausgangsseite des Elements **210** definiert ist, gebildet aus zwei orthogonalen Sets von parallelen Linien, die um 1 mm voneinander getrennt sind. In den vorliegenden Unterlagen repräsentiert also ein Pixel kein diskretes Element, sondern entspricht einem Quadratmillimeter der äußeren Oberfläche des Elements **210**.

[0049] Das Verhältnis der Leuchtdichte von benachbarten Pixeln liegt bevorzugt zwischen 0,95 und 1,05, stärker bevorzugt zwischen 0,98 und 1,02 und noch stärker bevorzugt zwischen 0,99 und 1,01. Das Verhältnis der Leuchtdichte von nicht benachbarten Pixeln liegt bevorzugt zwischen 0,5 und 2,0, stärker bevorzugt zwischen 0,57 und 1,75, noch stärker bevorzugt zwischen 0,67 und 1,5 und am meisten bevorzugt zwischen 0,77 und 1,3. Es versteht sich, daß ein gegebenes Verhältnis größer oder kleiner als 1,0 sein kann, je nachdem, ob das Verhältnis mit der Intensität des intensiveren Pixels bestimmt wird, das in dem Zähler bzw. Nenner angeordnet ist.

[0050] Wie die Fig. 5A und Fig. 5B zeigen, ist der Montagekanal **144** so ausgebildet, daß er mit einer Montagehalterung **250**, wie der in den Fig. 6A und Fig. 6B gezeigten, zusammenpaßt. Die Montagehalterung **250** ist an einer Platte **260** angebracht, die an einem Gebäude **270** oder einer anderen Konstrukton unter Verwendung von Schrauben **280**, Bolzen oder dergleichen befestigt sein kann. Die Montagehalterung **250** kann aus nachgiebigem Kunststoff (oder einem anderen für den Gebrauch im Freien geeigneten Material) bestehen und weist ein Arretierelement **290** auf.

[0051] Um die Montagehalterung **250** an dem Montagekanal **144** zu befestigen, wird das Profil des Arretierelements **290** verkleinert, indem man das Arretierelement **290** in den Montagekanal **144** preßt, so daß beide Seiten des Arretierelements um einen Schlitz **300** herum zusammengedrückt werden, so daß das Arretierelement **290** von dem Montagekanal **144** aufgenommen wird. Wenn das Arretierelement **290** in dem Kanal **144** ist, federt es zurück, um seinen nicht zusammengedrückten Zustand wieder anzunehmen (Fig. 6A), so daß die Beleuchtungsvorrichtung **100** (**230**) in ihrer Lage gehalten wird.

[0052] Die Beleuchtungsvorrichtung **230** (**100**) kann vorteilhafterweise aus Segmenten unterschiedlicher Länge, wie etwa 2, 4 oder 8 Fuß ausgebildet sein. Zwei oder mehr Segmente können durch eine Hülse **310** miteinander gekoppelt sein, wie in den Fig. 7A und Fig. 7B gezeigt ist. In der Hülse **310** ist eine duale Steckbuchse **320** zur Aufnahme von jeweiligen Steckern **330** von jeder der zwei Beleuchtungsvorrichtungen **230**. Die Stecker **330** sind mit der Leiterplatte **130** elektrisch verbunden, und die Steckbuchse **320** ist über eine elektrische Leitung **340** an eine Stromversorgung elektrisch angeschlossen.

[0053] Die Steckbuchse **320** kann innerhalb der Hülse **310** beispielsweise durch Ringe oder Speichen (nicht gezeigt), die sich innerhalb der Hülse erstrecken, in ihrer Lage gehalten werden. Fig. 7C zeigt eine alternative Anordnung, bei der Strom über eine einzige Steckbuchse **360** zugeführt wird, die an einem Ende von einer der Vorrichtungen **230** angeordnet ist. In diesem Fall können benachbarte Vorrichtungen **230** durch eine duale Steckbuchse (nicht gezeigt), an der keine elektrische Leitung **340** angebracht ist, verbunden werden.

[0054] Eine bevorzugte Ausführungsform der optischen Ablenkeinrichtung **110** wird unter Bezugnahme auf die Fig. 8 bis Fig. 11 erläutert. Fig. 8 zeigt ei-

nen Querschnitt einer optischen Ablenkeinrichtung **110a**, die einen Bereich **400** mit innerer Totalreflexion (TIR-Bereich) mit einer Oberfläche **410** aufweist, die sanft gekrümmt ist und eine Wirbelgestalt definiert, die einen Scheitel **421** bildet, der sich in die optische Ablenkeinrichtung **110a** hinein erstreckt. Die optische Ablenkeinrichtung **110a** ist von Luft umgeben, so daß eine Brechungsgrenzfläche gebildet ist, die eine innere Totalreflexion ermöglicht.

[0055] Die Oberfläche **410** dieser Ausführungsform reflektiert darauf fallendes Licht im wesentlichen vollständig, so daß im wesentlichen kein Licht durch sie hindurchgelassen wird. Der TIR-Bereich **400** kann vorteilhafterweise die Form einer gleichwinkligen Spirale haben, die einen Cusp-Bereich **420** bildet. Es ist gezeigt, daß die Oberfläche **410** gemäß Fig. 8 axial- und kreissymmetrisch ist und sich um 360° um eine Vertikalachse **424** herum erstreckt, die mit der Punktlichtquelle **174** ausgefluchtet ist und durch sie hindurchgeht. Es kann jedoch auch eine TIR-Ablenkeinrichtung (nicht gezeigt) verwendet werden, bei welcher der Cusp-Bereich um eine Linie symmetrisch ist, anstatt wie in Fig. 8 um einen Punkt symmetrisch orientiert zu sein. Eine solche TIR-Ablenkeinrichtung hat eine planare anstelle einer radialen Symmetrie.

[0056] Bei der Ausführungsform von Fig. 8 ist die Punktlichtquelle **174**, wie etwa eine LED unter dem Scheitel **421** der TIR-Oberfläche (d. h. unmittelbar unter der Spitze an dem Cusp **420**) in enger Nähe dazu angebracht, wobei sich die reflektierende Oberfläche um 360° um die LED und den Scheitel herum erstreckt. Die LED **174** ist in einem LED-Gehäuse **430** enthalten, das sich in einer Ausnehmung **440** in der optischen Ablenkeinrichtung **110a** befindet. Um eine gute Kopplung in die hier angegebenen optischen Ablenkeinrichtungen **110** sicherzustellen und um die Reflexionen an der Grenzfläche zwischen dem LED-Gehäuse **430** und der Begrenzung der Ausnehmung **440** zu reduzieren, kann ein transparenter optischer Haftvermittler (nicht gezeigt), wie etwa ein Klebstoff oder ein Gel verwendet werden, um optisch störende Luftspalte zwischen der LED **174** und der optischen Ablenkeinrichtung auszuschließen. Der transparente optische Haftvermittler könnte ein Epoxid, Silikon oder jedes wohlbekannte organische oder anorganische optische Haftvermittlermaterial sein. Bevorzugt ist die Brechzahl des Haftvermittlers zwischen derjenigen des LED-Gehäuses und der optischen Ablenkeinrichtung **110**.

[0057] Die Oberfläche **410** kann gekrümmt sein, oder sie kann eine Vielzahl von flachen Oberflächen aufweisen, die an eine Kurve angenähert sind, um eine Linse mit innerer Totalreflexion (TIR) zu bilden, die einen Brennpunkt hat. Wenn die Punktlichtquelle **174** (wie gezeigt) an diesem Brennpunkt positioniert ist, wird von der Punktlichtquelle **174** erzeugtes Licht von der Oberfläche **410** totalreflektiert. Wenn die Oberfläche **410** gekrümmt ist, kann jede von einer Anzahl von Gestalten verwendet werden, wie etwa eine Hyperboloid-, Paraboloid-, Konus-, Cusp- oder andere Rotationsfläche.

[0058] Die Erstellung eines mathematischen Modells dieser Gestalten kann mit einem optischen Analyse-Softwarepaket, wie etwa ASAP von Breault Research, Tucson, Arizona, ausgeführt werden. Die Oberfläche **410** wird so konturiert, daß im wesentlichen sämtliche von der LED **174** an dem Brennpunkt der Oberfläche **410** abgestrahlten Lichtstrahlen auf die Oberfläche **410** unter einem Winkel fallen, der zumindest gleich dem kritischen Winkel ist.

[0059] Dies kann erreicht werden, indem man den Bereich von möglichen Einfallswinkeln von Lichtstrahlen von der LED **174** an dem Brennpunkt an verschiedenen lokalen Bereichen der Oberfläche **410** berechnet. Die lokalen Bereiche werden dann so orientiert, daß sämtliche Strahlen innerhalb des kritischen Bereichs einfallen. Die lokalen Bereiche könnten groß sein, so daß die Oberfläche **410** beispielsweise aus einer Ansammlung von flachen Oberflächen besteht. Mit abnehmender Größe des lokalen Bereichs bildet die Oberfläche **410** eine sanft gekrümmte Oberfläche, die beispielsweise eine gleichwinklige Spiralform hat, wie in Fig. 8 gezeigt ist.

[0060] Es wird zwar eine kreis- und axialsymmetrische Cusp-Oberfläche für viele Anwendungen bevorzugt, die Oberfläche **410** braucht jedoch nicht symmetrisch zu sein. Im allgemeinen ist die Oberfläche **410** konisch erweitert, so daß Licht, das von der Oberfläche **410** reflektiert wird, aus der optischen Ablenkeinrichtung **110a** und davon weg gerichtet wird. In diesem Sinne ist die optische Ablenkeinrichtung **110a** dieser Ausführungsform als eine seitliche Lichtablenkeinrichtung wirksam. Die konisch erweiterte Oberfläche **410** kann als eine Oberfläche gesehen werden, die sich zwischen einem Scheitelbereich der Oberfläche **410** (entsprechend dem Cusp **420** von Fig. 8) und einem Basisbereich **450** über dem Scheitel erstreckt.

[0061] Der Basisbereich **450** erweitert sich von der durch den Scheitel **421** und die Punktlichtquelle **174** verlaufenden Vertikalachse **424** konisch nach außen (radial). Die konisch erweiterte reflektierende Oberfläche **410** ist also von dem Scheitel **421** zu dem Basisbereich **450** nach außen konisch erweitert. Eine Nut **480** in der Ausführungsform von Fig. 8 (und den Ausführungsformen der Fig. 9, Fig. 10, Fig. 11 und Fig. 13, die noch erläutert werden) hat eine solche Tiefe, daß im wesentlichen sämtliche Strahlen, die sich sonst direkt von der Punktlichtquelle **174** zu der seitlichen Oberfläche **120** der Ablenkeinrichtung **110a** ausbreiten würden, von mindestens einer Wand der Nut abgefangen. Die Nut **480** verhindert also die direkte Ausbreitung von Strahlen durch die seitliche

Oberfläche **120** und auf das optische Konditionierungselement **210** und verhindert dadurch, daß solche Strahlen Ungleichmäßigkeiten der Ausgangsleuchtdichte verursachen.

[0062] Die Fig. 9 bis Fig. 11 zeigen die Strahlengänge von verschiedenen Strahlen innerhalb der optischen Ablenkeinrichtung **110a**, wobei Fig. 9 eine Übersicht der verschiedenen Wege ist, die die Lichtstrahlen nehmen. Die optische Ablenkeinrichtung **110a** ist mit einer Ringnut **480** gezeigt, von der eine Fläche (die Oberfläche **490**) matt ist. Die Nut **480** lenkt auf sie einfallendes Licht von der LED **174** um. Lichtstrahlen treten aus der LED **174** an dem Brennpunkt der Oberfläche **410** innerhalb des LED-Gehäuses **430** aus.

[0063] Einige Lichtstrahlen **460** werden durch die innere seitliche Oberfläche der Nut **480** zur Ausbreitung zu der oberen Oberfläche der Nut gebrochen, wo die Strahlen **460** zur Ausbreitung zu der reflektierenden TIR-Oberfläche **410** erneut gebrochen werden. Andere Strahlen **470** verlaufen innerhalb des von den inneren seitlichen Oberflächen der Nut **480** begrenzten Bereichs und umgehen somit die Nut zur direkten Ausbreitung zu der reflektierenden TIR-Oberfläche.

[0064] Sowohl die Strahlen **460** als die Strahlen **470** erfahren eine Totalreflexion an der Oberfläche **410**, werden nach unten reflektiert und treten schließlich durch die seitliche Oberfläche **120** aus der Ablenkeinrichtung aus. Wie oben in Verbindung mit Fig. 1 erläutert, wird aus der Ablenkeinrichtung **110a** austretendes Licht von dem Flächenkörper **150** und den Endkappen **160** an jedem Ende der Vorrichtung **100** (**230**) diffus reflektiert und tritt schließlich durch das Flächenkörperelement **170**, das dem diffus reflektierenden Flächenkörper **150** zugewandt ist, aus der Vorrichtung aus.

[0065] Der Verlauf der Lichtstrahlen **460** und **470** durch die Ablenkeinrichtung **110a** ist im einzelnen in den Fig. 10 bzw. Fig. 11 gezeigt. Fig. 10 zeigt Lichtstrahlen **460**, die von den Wänden der Nut **480** gebrochen werden. Während einige Strahlen **460a** nach innerer Totalreflextion direkt aus der seitlichen Oberfläche **120** der Ablenkeinrichtung **110** austreten, erfahren andere Strahlen **460b** eine innere Reflexion zu der matten Oberfläche **490** hin, wo sie in viele Richtungen gestreut werden, bevor sie aus der Vorrichtung **100** (**230**) austreten. Fig. 10 zeigt ferner Strahlen **465**, die durch die innere seitliche Oberfläche der Nut **480** zur Ausbreitung zu der matten äußeren seitlichen Oberfläche **490** hindurchgehen, wo die Strahlen **465** in viele Richtungen gestreut werden.

[0066] Dieses Streuen verhindert, daß sie durch den Ausgangsbereich hindurch sichtbar werden. Fig. 11 zeigt Lichtstrahlen **470**, die eine Totalreflexion an der Oberfläche **410** erfahren und an der Fläche **120** gebrochen werden, woraufhin die Strahlen **470** aus der Ablenkeinrichtung **110a** austreten. Die Oberfläche **410** kann eine Gestalt haben, die darauf ausgerichtet ist, eine gleichmäßige Beleuchtung des Flächenkörpers **150** zu bewirken.

[0067] Eine andere TIR-Ausführungsform ist in Fig. 12 gezeigt, wobei eine optische Ablenkeinrichtung **110b** eine konisch erweiterte reflektierende Oberfläche, die von einem Cusp-Bereich **492** gebildet ist, und einen brechenden Bereich aufweist, der von einer elliptischen Trommellinse oder einem Torusbereich **494** unter dem Cusp-Bereich **492** gebildet ist. Sowohl der Cusp-Bereich **492** als auch der brechende Bereich **494** sind Rotationsflächen um eine Achse **496**, die durch die Punktlichtquelle **174** sowie durch den Scheitel des Cusp-Bereichs **492** hindurchgeht.

[0068] Lichtstrahlen **498**, die auf eine Oberfläche **410b** in dem Cusp-Bereich **492** auftreffen, erfahren eine innere Totalreflexion und treten aus der Ablenkeinrichtung **110b** aus, wobei sie sich nominell senkrecht zu der Achse **496** ausbreiten. Lichtstrahlen **500**, die aus einer Oberfläche **502** des Torusbereichs **494** austreten, werden gebrochen, so daß sie sich ebenfalls nominell senkrecht zu der Achse **496** ausbreiten.

[0069] Ferner ist die Oberfläche **502** so ausgebildet, daß sich im wesentlichen keine Strahlen von der Punktlichtquelle **174** durch die seitliche Oberfläche **120** ausbreiten, ohne zuerst eine Totalreflexion an der Oberfläche **410b** erfahren zu haben. Die resultierende Lichtverteilung außerhalb der Ablenkeinrichtung **110b** ist derart, daß die Ausführungsform gemäß Fig. 12 mit einer isotropen halbkugelförmigen Quelle wirksam ist, um eine äquatoriale Verteilung mit einer latitudinalen Strahlbreite in Abhängigkeit von der relativen Größe der Punktlichtquelle **174** zu erzeugen.

[0070] Die Ablenkeinrichtung **110b** ist zur Verwendung in den hier angegebenen Beleuchtungsvorrichtungen geeignet, kann jedoch alternativ allein außerhalb eines Gehäuses **140** (**240**) verwendet werden, um einen seitlich schmalen 360°-Ausgang im Fernfeld zu erzeugen. Typische Anwendungen sind Luftfahrzeug-Warnbefeuerungen für hohe Konstruktionen und Schiffahrt-Bakenfeuer an Bojen.

[0071] Obwohl die in den Fig. 8 bis Fig. 11 gezeigte Ausführungsform eine Oberfläche **410** aufweist, die in bezug auf die Lichtstrahlen **460** und **470** totalreflektiert, und die Ausführungsform von Fig. 12 ebenfalls eine Oberfläche **410b** aufweist, die totalreflektiert, weist eine alternative Ausführungsform eine Oberfläche **510** auf, die nur teilreflektiert und nicht totalreflektiert.

[0072] Wie in Fig. 13 gezeigt ist, weist diese Ausführungsform eine konisch erweiterte Oberfläche auf, die einen Cusp-Bereich **420c** und einen Basisbereich **450c** aufweist. Lichtstrahlung **520**, die sonst zur Ausbreitung durch die seitliche Fläche **120** der optischen Ablenkeinrichtung **110c** reflektiert würde, geht durch die Oberfläche **510** hindurch (d. h. wird von ihr diffus durchgelassen) zur Ausbreitung direkt durch das Flächenkörperelement **170**, ohne von dem Reflexionsflächenkörper **150** oder einer der Kappen **160** weg reflektiert zu werden.

[0073] Dies kann die Gleichmäßigkeit der Beleuchtung des Flächenkörperelements **170** verbessern und Lichtverluste, die mit Reflexionen von dem Flächenkörper **150** und den Kappen **160** weg verbunden sind, eliminieren. In Fig. 13 erfährt jedoch ein erheblicher Anteil der Lichtstrahlen **460** und **470** bevorzugt immer noch eine innere Totalreflexion an der Oberfläche **510**. Die optische Ablenkeinrichtung **110c** kann vorteilhafterweise so dimensioniert sein, daß sie es ermöglicht, daß zumindest ein erheblicher Anteil des von dem Hohlraumflächenkörper **150** weg reflektierten Lichts das optische Konditionierungselement **210** erreicht, ohne durch die Ablenkeinrichtung **110c** hindurchzugehen, und die Reflexionsoberflächen **150** und **160** können so angeordnet sein, daß sie es ermöglichen, daß zumindest ein erheblicher Anteil des durch die Oberfläche **510** durchgelassenen Lichts das optische Konditionierungselement ohne Reflexion erreicht. Dieses Merkmal dient dazu, die verringerte Beleuchtung des Flächenkörper **150** unmittelbar unter der Ablenkeinrichtung **110c** zu kompensieren.

[0074] Eine Oberfläche **510**, die teilweise reflektierend und teilweise durchlässig ist, kann im allgemeinen durch geeignete Wahl des Einfallswinkels zwischen den Lichtstrahlen **460** (**470**) und der Oberfläche **190** gebildet sein. Beispielsweise kann die Oberfläche **510** unter einem Winkel gebildet sein, der sicherstellt, daß etwas Licht durch die Oberfläche **190** "austritt", während anderes Licht von der Oberfläche **190** weg reflektiert wird. Zudem kann der Scheitel des Cusp-Bereichs gerundet sein, um einen gesteuerten Austritt von Licht von der LED **174** durch die Oberfläche **510** unmittelbar über der LED zu ermöglichen.

[0075] Dies eliminiert dunkle Flecken über der LED **174**. Wie in Fig. 13 gezeigt, kann außerdem eine Oberfläche **410**, die ursprünglich totalreflektierend ist, leicht gesandstrahlt oder geätzt werden, um verteilte Streuzentren **530** darauf zu bilden, so daß etwas von dem auf die Streuzentren fallenden Licht durch die Oberfläche **410** hinduchgeht. Diese Streuzentren **530** können ungleichmäßig an der Oberfläche **410** verteilt sein. Ferner kann die Oberfläche **410** stark geätzt oder gesandstrahlt werden, um eine Struktur, wie etwa eine Serie von konzentrischen Ringen **540** (siehe die Ablenkeinrichtung **110d** von Fig. 14) um ein Zentrum **544** an einem Scheitel der Oberfläche zu bilden, was ebenfalls darin resultiert, daß etwas von dem Licht durch die Oberfläche austritt.

[0076] Die in den Fig. 8 bis Fig. 14 gezeigten optischen Ablenkeinrichtungen können aus einem Material bestehen, das für von der LED **174** erzeugtes Licht transparent ist, wie etwa aus einem transparenten polymeren Material, und können durch verschiedene wohlbekannte Verfahren, wie etwa maschinelles Bearbeiten oder Spritzgießen hergestellt werden. Bevorzugte Materialien für die optischen Ablenkeinrichtungen **110** sind Acryl, Polycarbonat und Silikon. Acryl, das eine Brechzahl von ungefähr 1,5 hat, ist kratzfest und relativ zu Polycarbonat kostengünstiger.

[0077] Dagegen hat Polycarbonat, das eine Brechzahl von ungefähr 1,59 hat, ein höheres Temperaturstandverhalten als Acryl. Polycarbonat hat ferner gegenüber Acryl verbesserte mechanische Eigenschaften. Silikon hat eine Brechzahl von ungefähr 1,43. Die Brechzahl von Luft ist nahezu 1,0.

[0078] Während die Reflektoren der bevorzugten Ausführungsformen konisch erweitert sind, verwendet eine andere Ausführungsform (nicht gezeigt) einen nicht konisch erweiterten planaren Reflektor, der teilweise reflektierend und teilweise durchlässig ist. Anstatt optische Ablenkeinrichtungen **110** zu verwenden, die sich auf innere Total- oder Teilreflexion stützen, kann ferner die Reflexion durch teil- oder totalreflektierende Spiegel (nicht gezeigt) ermöglicht werden, wobei die Spiegel bevorzugt so konturiert sind, daß sie Licht seitlich zu reflektieren.

[0079] Solche Spiegel können vorteilhafterweise eine gekrümmte Oberfläche aufweisen, so daß Licht über einen Bereich von Winkeln reflektiert und innerhalb der Vorrichtung **100** (**230**) gestreut wird, um eine gleichmäßige Beleuchtung des Flächenkörperelements **170** zu ergeben. Diese Funktion kann auch von einem transparenten optischen Element erfüllt werden, das eine nicht gleichmäßige Änderung in bezug auf seinen Brechungsindex hat, beispielsweise von einem optischen Element mit Gradientenindex.

[0080] Die Punktlichtquellen **174** können vorteilhafterweise ein LED-Cluster aufweisen, das einen Dreifarbenausgang, beispielsweise rot, grün und blau ergibt, so daß durch geeignete Wahl der relativen Intensität der jeweiligen Komponentenwellenlängen praktisch jede Farbe erzeugt werden kann. Ferner sind sowohl allmähliche als auch rasche zeitliche Änderungen der Farbe möglich, und es können Wanderwellenstrukturen erzeugt werden, wenn die jeweiligen Ausgänge der LEDs **174** aufeinanderfolgend auf koordinierte Weise geändert werden.

[0081] Die Punktlichtquellen **174** sind zwar in erster Linie in bezug auf LEDs beschrieben worden; es können jedoch andere Punktlichtquellen, wie etwa Miniaturglühfäden oder Bogenlampen (nicht gezeigt) verwendet werden. LEDs werden jedoch bevorzugt wegen ihrer Fähigkeit, bei relativ niedriger Spannung (beispielsweise 24 V Gleichstrom oder weniger) betrieben zu werden. Ferner erzeugen LEDs keine HF-Störungen.

[0082] Als eine weitere Alternative zur Verwendung von LEDs als Punktlichtquellen **174** kann ein Lichtwellenleiter (nicht gezeigt) verwendet werden, um Licht auf eine Serie von optischen Ablenkeinrichtungen **110** zu verteilen, wobei Licht an verschiedenen Punkten entlang dem Lichtwellenleiter (die den Punktlichtquellen **174** entsprechen) abgenommen und in die Ablenkeinrichtungen eingeleitet wird. In diesem Fall kann eine Laserdiode oder ein anderer Lichterzeuger verwendet werden, um Licht in die Lichtwellenleiter einzukoppeln, und die Lichtwellenleiter bilden die Punktlichtquellen.

[0083] Die in den Fig. 1 bis Fig. 4 gezeigten zylindrischen oder halbzylindrischen Vorrichtungen können bei einer Reihe von verschiedenen Anwendungen eingesetzt werden, wie etwa zur dekorativen Beleuchung, für Leuchtkästen, für Gegenlichtquellen und als Führungen entlang von Wegen. Ferner kann das mit den optischen Ablenkeinrichtungen **110** und dem Flächenkörperelement **70** verwendete Gehäuse in verschiedenen Größen und Gestalten ausgebildet sein, einschließlich großflächig planar, linear langgestreckt und gekrümmt langgestreckt.

[0084] Fig. 15 zeigt eine Ausführungsform, bei welcher der Buchstabe "G" gebildet worden ist. Andere mögliche Ausführungsformen sind für den Fachmann ersichtlich. Anstatt die optischen Ablenkeinrichtungen **110** entlang einer Linie oder einer Kurve zu positionieren, können die optischen Ablenkeinrichtungen beispielsweise in einem Gitter (nicht gezeigt) angebracht sein, um ein großflächiges Display, dessen Oberfläche mit Ziffern, Buchstaben, Logos oder anderen Markierungen bedruckt sein kann, abzudecken.

Patentansprüche

1. Beleuchtungsvorrichtung, die folgendes aufweist:
– einen Hohlraum, der Reflexionsoberflächen (**150**) und einen Ausgangsbereich besitzt;
– mindestens eine Lichtquelle, die in dem Hohlraum angeordnet ist, wobei die Lichtquelle eine Punktlichtquelle (**174**) und eine optische Ablenkeinrichtung (**110**, **110a**, **110b**, **110c**, **110d**) hat, die eine konisch erweiterte reflektierende Oberfläche hat; und
– ein optisches Konditionierungselement (**210**) über dem Ausgangsbereich, wobei das optische Konditionierungselement (**210**) mindestens einen Diffusor (**180**) aufweist,
dadurch gekennzeichnet,
daß sich das optische Ablenkelement (**110**, **110a**, **110b**, **110c**) um eine Achse (**424**) erstreckt, die mit der Lichtquelle (**174**) im wesentlichen ausgefluchtet ist und durch diese hindurchgeht;
daß sich die konisch erweiterte reflektierende Oberfläche (**410**, **410b**) zwischen einem Scheitelbereich (**421**) der Oberfläche und einem Basisbereich (**450**, **450c**) der Oberfläche erstreckt;
daß die Achse (**424**) durch den Scheitelbereich (**421**) und die Punktlichtquelle (**174**) hindurchgeht;
und daß der Basisbereich (**450**, **450c**) oberhalb von dem Scheitelbereich (**421**) liegt und sich von der Achse (**424**) radial nach außen erstreckt, so daß sich die reflektierende Oberfläche (**410**, **410b**) von dem Scheitelbereich (**421**) zu dem Basisbereich (**450**, **450c**) nach außen konisch erweitert.

2. Vorrichtung nach Anspruch 1, wobei die konisch erweiterte Oberfläche (**410**) gekrümmt ist.

3. Vorrichtung nach Anspruch 1 oder 2, wobei die konisch erweiterte Oberfläche (**410b**) eine Cusp-Form besitzt.

4. Vorrichtung nach einem der Ansprüche 1 bis 3, wobei die konisch erweiterte Oberfläche (**410**) von einer Brechungsgrenzfläche gebildet ist, die für eine innere Totalreflexion von Licht von der Punktlichtquelle (**174**) von der Achse (**424**) seitlich nach außen konfiguriert ist.

5. Vorrichtung nach einem der Ansprüche 1 bis 4, wobei die Punktlichtquelle (**174**) eine LED aufweist.

6. Vorrichtung nach einem der Ansprüche 1 bis 4, wobei die Punktlichtquelle (**174**) einen Miniaturglühfaden oder eine Bogenlampe aufweist.

7. Vorrichtung nach einem der Ansprüche 1 bis 6, wobei das optische Konditionierungselement (**210**) einen Prismenflächenkörper (**190**) aufweist.

8. Vorrichtung nach Anspruch 7, die zusätzlich einen zweiten Prismenflächenkörper (**194**) aufweist, wobei jeder Prismenflächenkörper (**190**, **194**) sich wiederholende Strukturen hat, die im allgemeinen orthogonal zu sich wiederholenden Strukturen des anderen Prismenflächenkörpers (**190**, **194**) orientiert sind.

9. Vorrichtung nach Anspruch 7, wobei der Prismenflächenkörper (**190**) und der Diffusor (**180**) in einer im wesentlichen parallelen Relation zueinander stehen, wobei der Diffusor (**180**) der Lichtquelle (**174**) näher ist als der Prismenflächenkörper (**190**).

10. Vorrichtung nach einem der Ansprüche 1 bis

9, wobei der Hohlraum innerhalb eines langgestreckten Gehäuses (**140**, **240**) ist, das eine Breite hat, die nicht wesentlich größer als die Breite des Ausgangsbereichs ist.

11. Vorrichtung nach Anspruch 10, wobei das optische Konditionierungselement (**210**) mindestens einen Prismenflächenkörper (**190**) aufweist, der sich wiederholende Strukturen hat, die unter einem Winkel von 45° relativ zu einer Längsachse des langgestreckten Gehäuses (**140**) orientiert sind.

12. Vorrichtung nach Anspruch 10 oder 11, wobei die Vorrichtung (**100**, **230**) mindestens zwei von den langgestreckten Gehäusen (**140**, **240**) aufweist, die mit den Enden aneinander gekoppelt sind.

13. Vorrichtung nach einem der Ansprüche 1 bis 12, wobei die Punktlichtquelle (**174**) und das optische Konditionierungselement (**210**) um 3,5 inch oder weniger voneinander getrennt sind.

14. Vorrichtung nach einem der Ansprüche 1 bis 12, wobei die Punktlichtquelle (**174**) und das optische Konditionierungselement (**210**) um 2,5 inch oder weniger voneinander getrennt sind.

15. Vorrichtung nach einem der Ansprüche 1 bis 12, wobei die Punktlichtquelle (**174**) und das optische Konditionierungselement (**210**) um 1,5 inch oder weniger voneinander getrennt sind.

16. Vorrichtung nach einem der Ansprüche 1 bis 15, wobei die reflektierenden Oberflächen (**150**) des Hohlraums diffus reflektierend sind.

17. Vorrichtung nach Anspruch 16, wobei die diffus reflektierenden Oberflächen (**150**) ein Reflexionsvermögen von mindestens 90% haben.

18. Vorrichtung nach einem der Ansprüche 1 bis 17, wobei die konisch erweiterte reflektierende Oberfläche (**410**) teilweise reflektierend und teilweise durchlässig ist.

19. Vorrichtung nach einem der Ansprüche 1 bis 16, wobei die konisch erweiterte reflektierende Oberfläche (**410**) für eine innere Totalreflexion von Licht konfiguriert ist.

20. Vorrichtung nach einem der Ansprüche 1 bis 19, wobei die mindestens eine Lichtquelle als eine Punktlichtquelle (**174**) weniger als 3,5 inch von dem Flächenkörper (**150**) beabstandet ist und die Reflexionsoberflächen (**150**) so beleuchtet, daß das Verhältnis der Leuchtdichte von benachbarten Pixeln zwischen 0,95 und 1,05 liegt und das Verhältnis der Leuchtdichte von nicht benachbarten Pixeln zwischen 0,5 und 2,0 liegt, so daß das Erscheinungsbild der Beleuchtung an dem Flächenkörper (**150**) im wesentlichen gleichmäßig ist.

21. Vorrichtung nach einem der Ansprüche 1 bis 20, wobei die optische Umlenkeinrichtung (**110**, **110a**) aus einem transparenten Material besteht, das eine reflektierende Oberfläche (**410**) hat, die von einer Brechungsgrenzfläche gebildet ist, die für eine innere Totalreflexion von Licht von der Punktlichtquelle (**174**) konfiguriert ist, die so positioniert ist, daß sie einen ersten Anteil von Lichtstrahlen (**470**) zu der reflektierenden Oberfläche (**410**) hin abstrahlt und einen zweiten Anteil von Lichtstrahlen (**460**) zu einer seitlichen Oberfläche (**120**) der Ablenkeinrichtung (**110**, **110a**) hin abstrahlt, wobei die Ablenkeinrichtung (**110**, **110a**) eine Brechungsgrenzfläche (**480**) aufweist, die den zweiten Anteil von Lichtstrahlen (**460**) zu der reflektierenden Oberfläche (**410**) hin bricht, so daß sowohl der erste als auch der zweite Anteil von Lichtstrahlen (**470**) von der reflektierenden Oberfläche (**410**) reflektiert werden.

22. Vorrichtung nach Anspruch 21, wobei die Punktlichtquelle (**174**) einen dritten Anteil von Lichtstrahlen (**465**) zu der seitlichen Oberfläche hin abstrahlt, wobei die Ablenkeinrichtung (**110**, **110a**) ferner eine Streufläche (**490**) aufweist, die den dritten Anteil von Strahlen (**465**) streut.

23. Vorrichtung nach Anspruch 21, wobei die Punktlichtquelle (**174**) am Boden der Ablenkeinrichtung (**110**, **110a**) angeordnet ist und wobei die reflektierende Oberfläche (**410**) so orientiert ist, daß sie den ersten und den zweiten Anteil von Lichtstrahlen (**460**, **470**) zu dem Boden der Ablenkeinrichtung (**110**, **110a**) hin reflektiert.

24. Vorrichtung nach einem der Ansprüche 1 bis 23,
wobei die Ablenkeinrichtung (**110c**) zwischen der Punktlichtquelle (**174**) und dem optischen Konditionierungselement (**210**) so positioniert ist, daß
(a) ein Anteil von Licht, das von der Punktlichtquelle (**174**) abgestrahlt wird, von der Ablenkeinrichtung (**110c**) zu den Reflexionsoberflächen (**150**) des Hohlraums hin reflektiert wird, und
(b) ein anderer Anteil von Licht, das von der Punktlichtquelle (**174**) abgestrahlt wird, durch die Oberfläche der Ablenkeinrichtung (**110c**) zu dem optischen Konditionierungselement (**210**) hin durchgelassen wird,
wobei die Ablenkeinrichtung (**110c**) so dimensioniert ist, daß sie es ermöglicht, daß zumindest ein erheblicher Anteil des reflektierten Lichts das optische Konditionierungselement (**210**) erreicht, ohne durch die Ablenkeinrichtung (**110c**) hindurchzugehen,
und wobei die Ablenkeinrichtung (**110c**) und die Reflexionsoberflächen (**150**) des Hohlraums so angeordnet sind, daß sie es ermöglichen, daß zumindest ein erheblicher Anteil des durchgelassenen Lichts das optische Konditionierungselement (**210**) erreicht,

ohne eine Reflexion zu erfahren.

Es folgen 15 Blatt Zeichnungen

Anhängende Zeichnungen

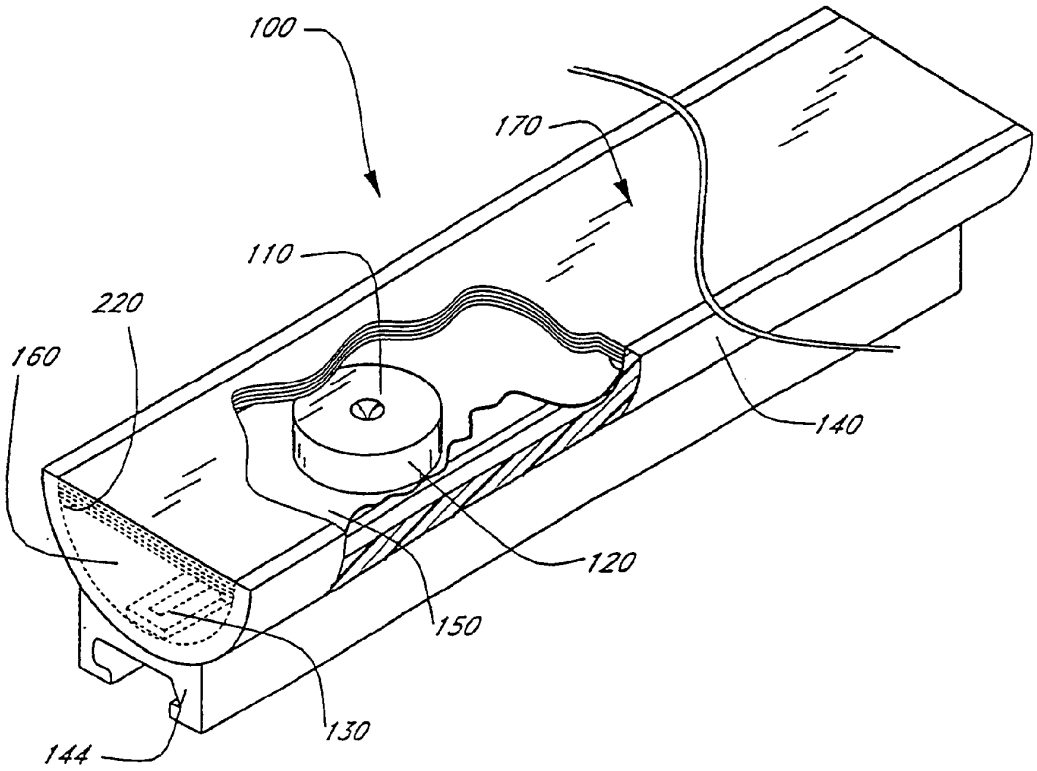

FIG. 1

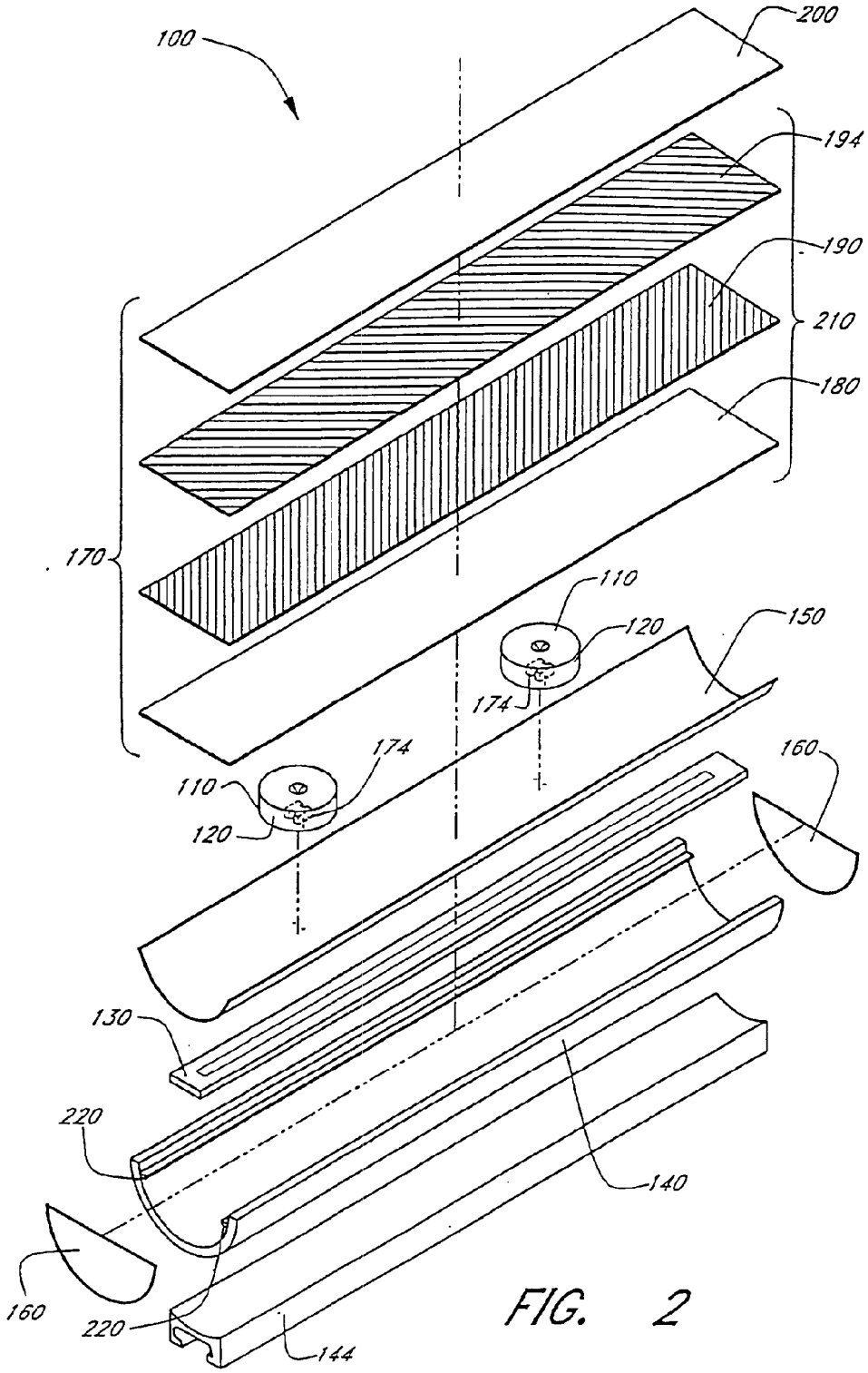
100
200
194
190
210
180
170
110
120
150
174
174
110
120
160
130
220
140
160
220
144

FIG. 2

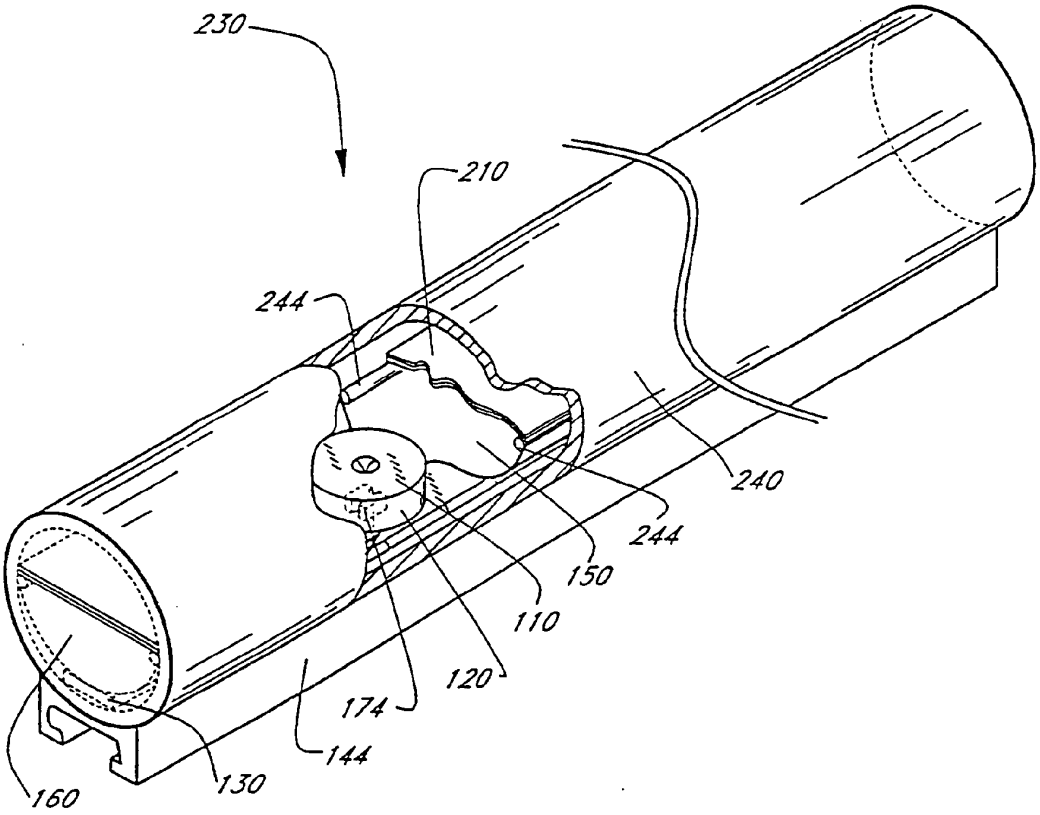

FIG. 3

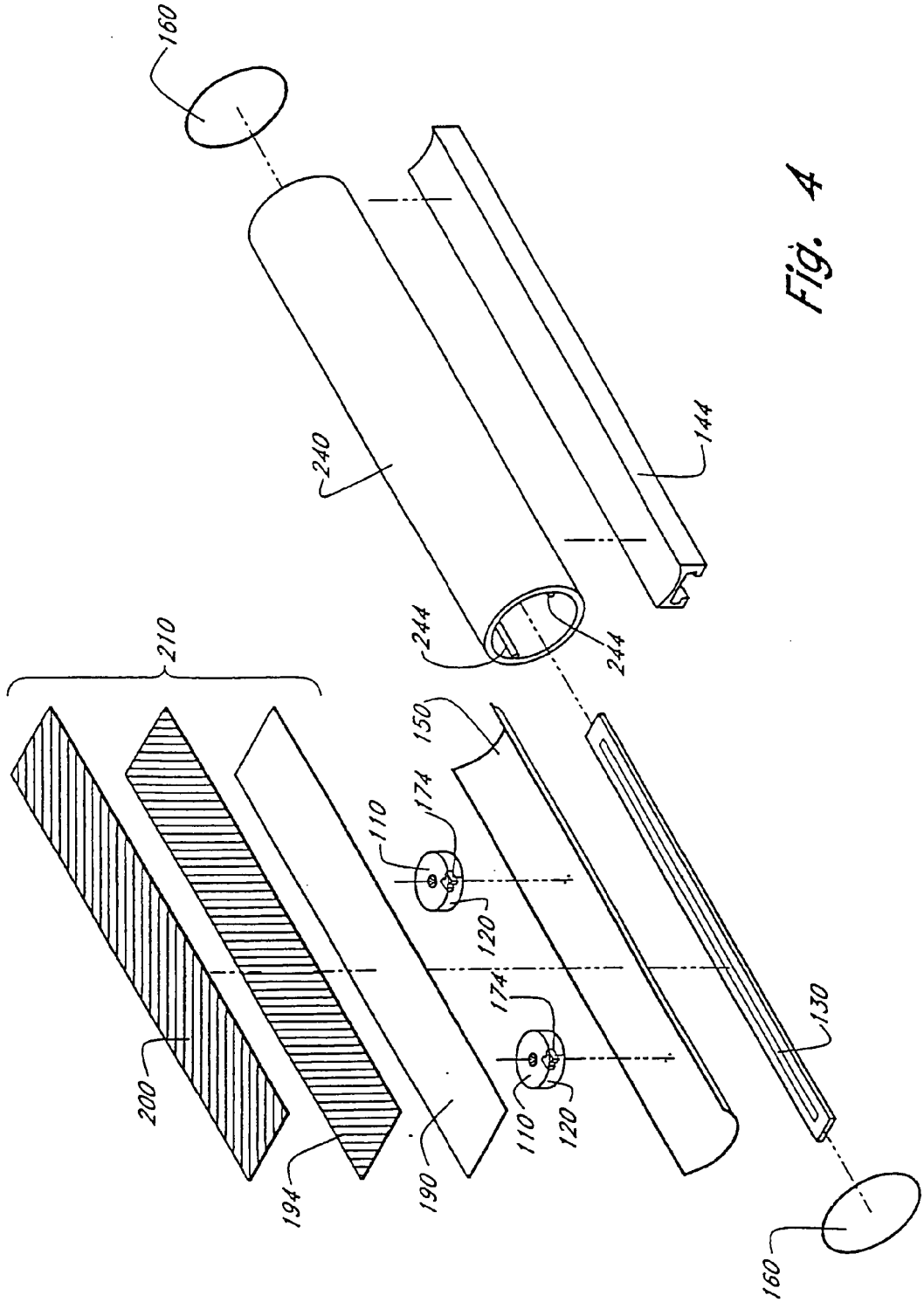
160
240
144
244
244
210
150
174
110
120
174
110
120
130
200
194
190
160

Fig. 4

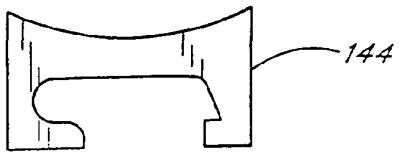

FIG. 5A

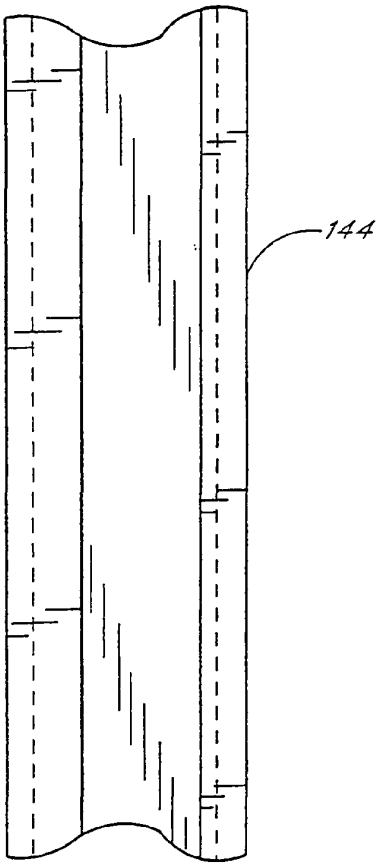

FIG. 5B

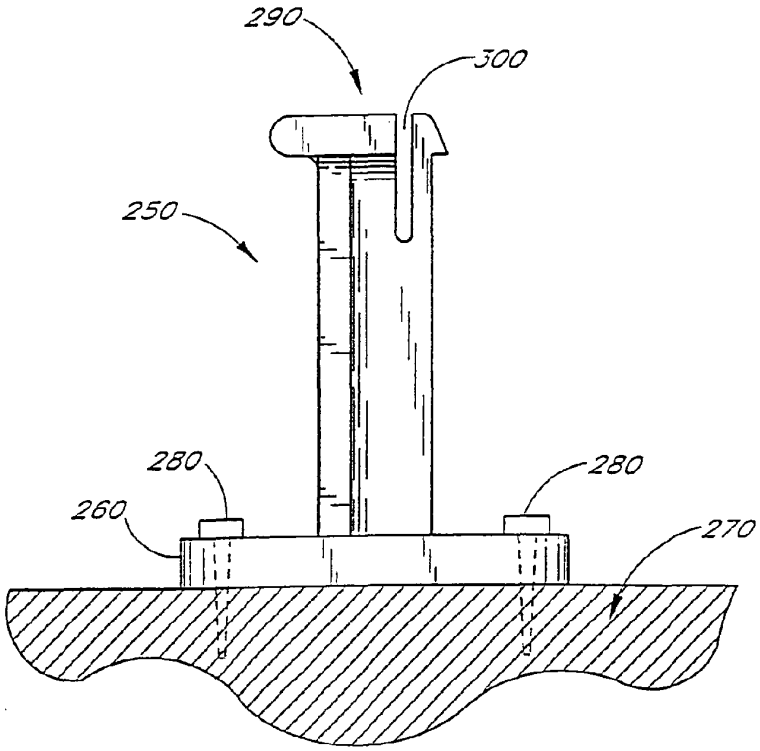

FIG. 6A

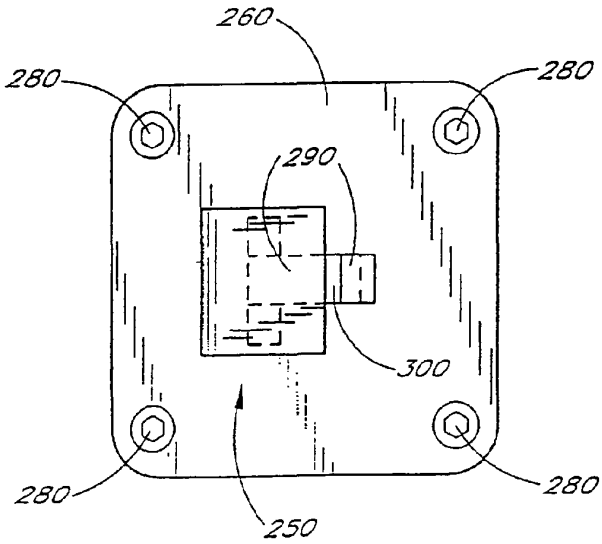

FIG. 6B

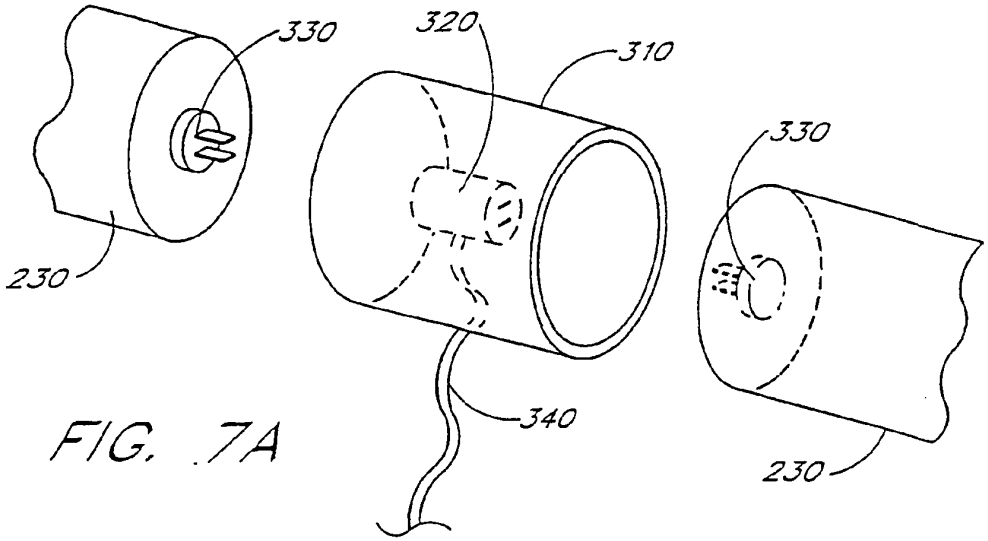

FIG. 7A

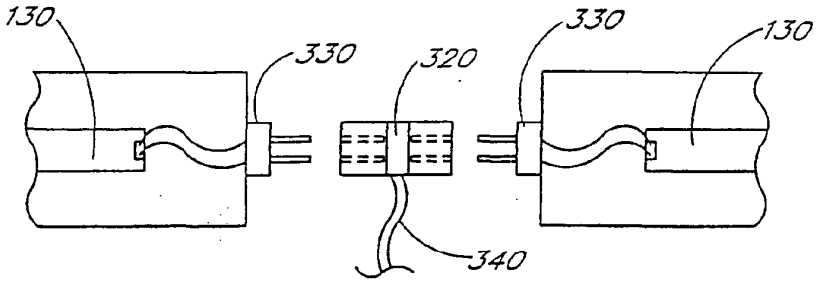

FIG. 7B

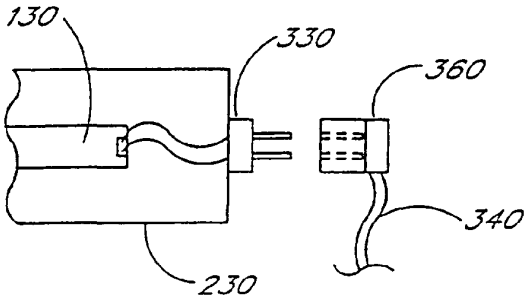

FIG. 7C

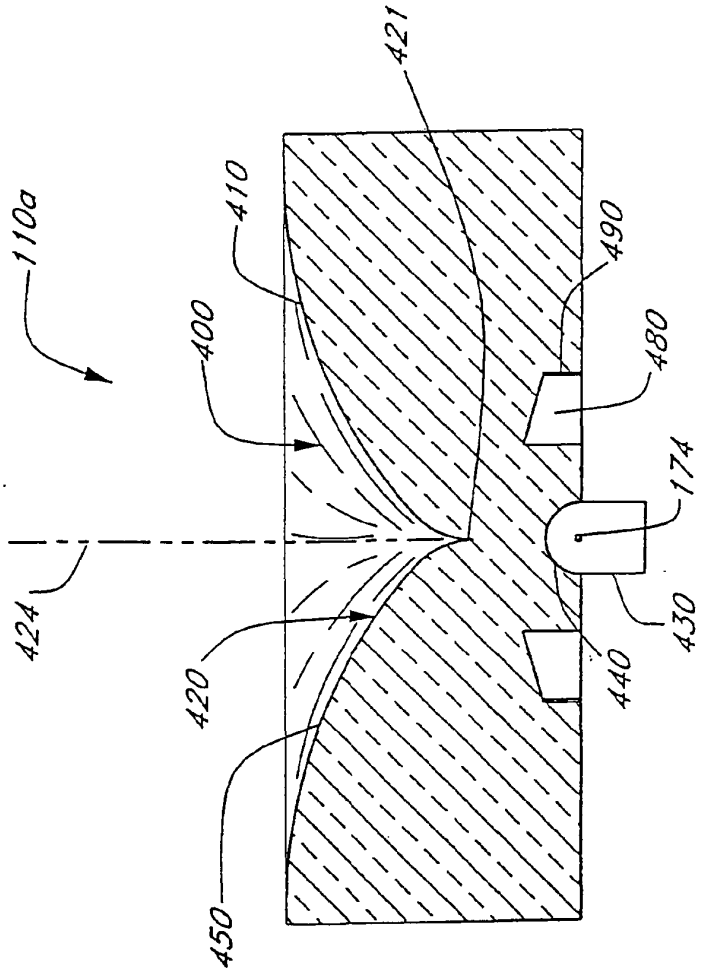

Fig. 8

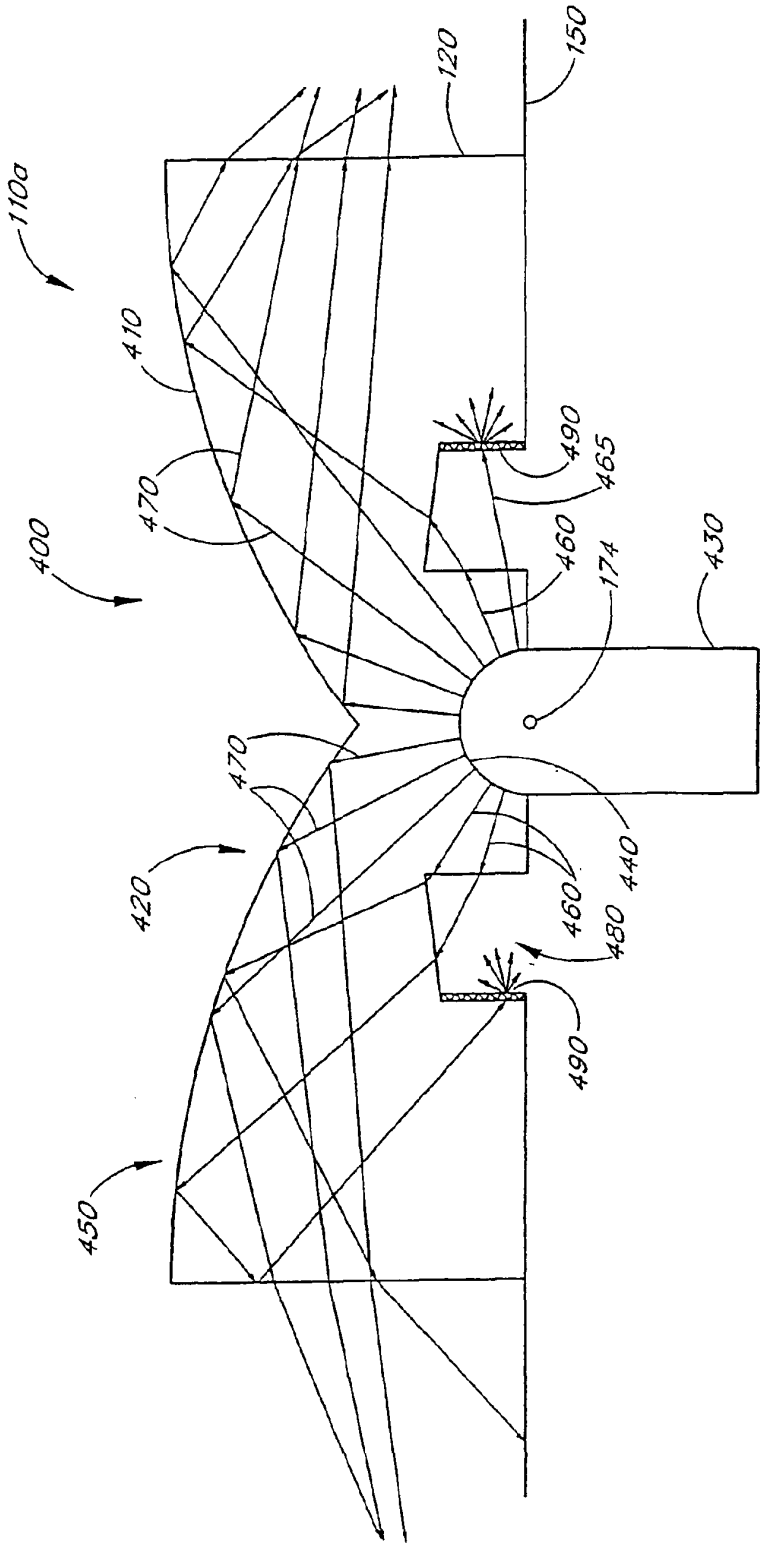
110a
400
410
420
450
470
470
120
150
490
465
460
174
430
440
460
480
490

FIG. 9

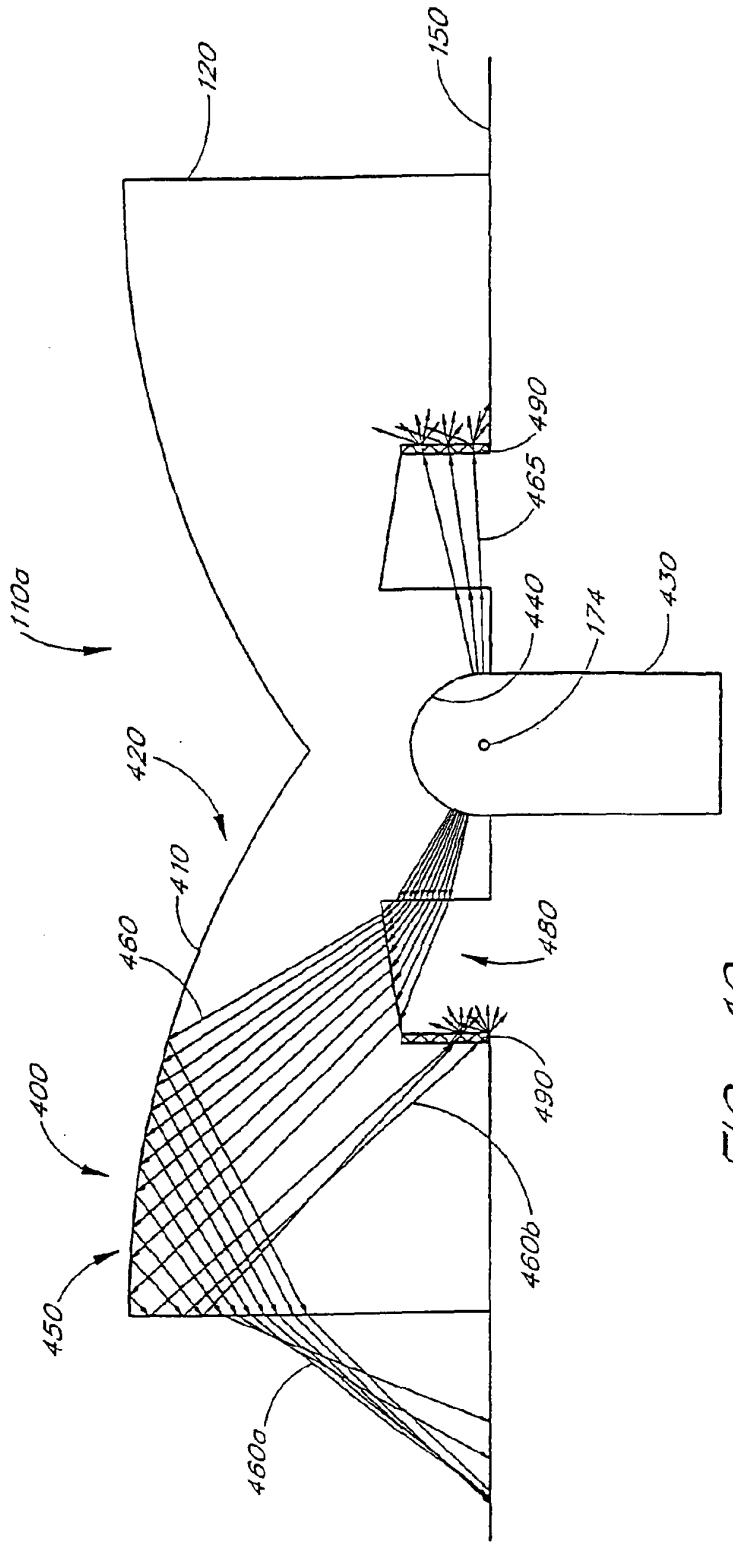
110a
120
150
420
410
460
400
450
460a
460b
490
465
440
174
430
480
490

FIG. 10

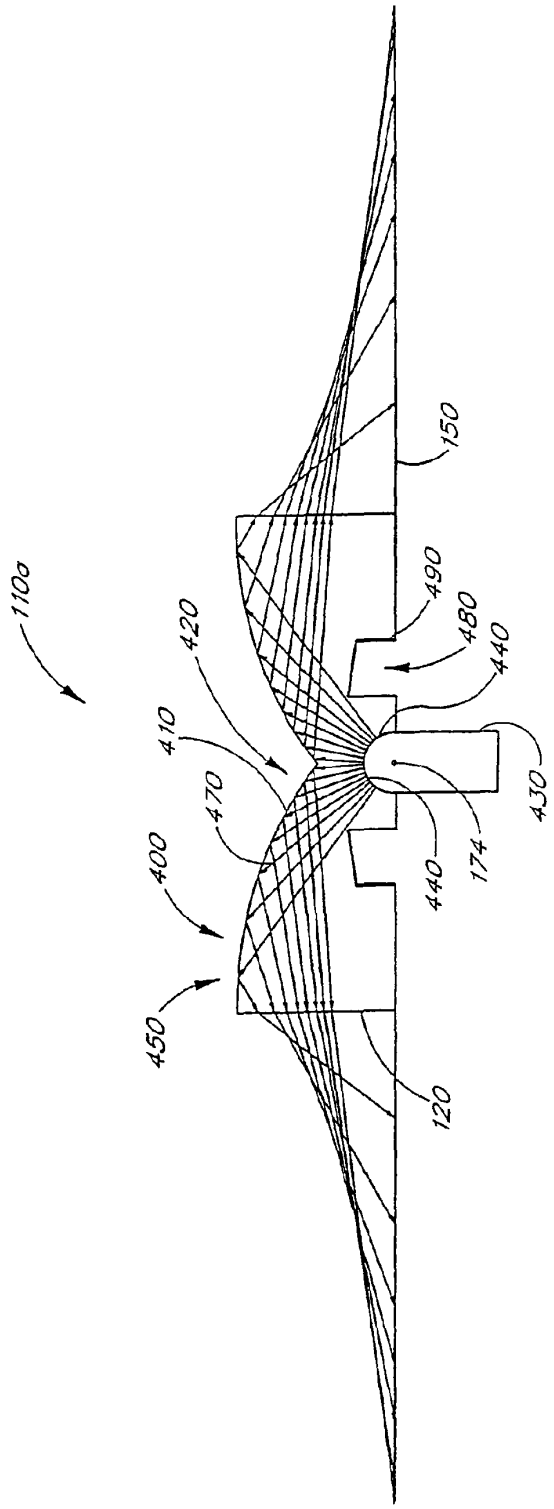

FIG. 11

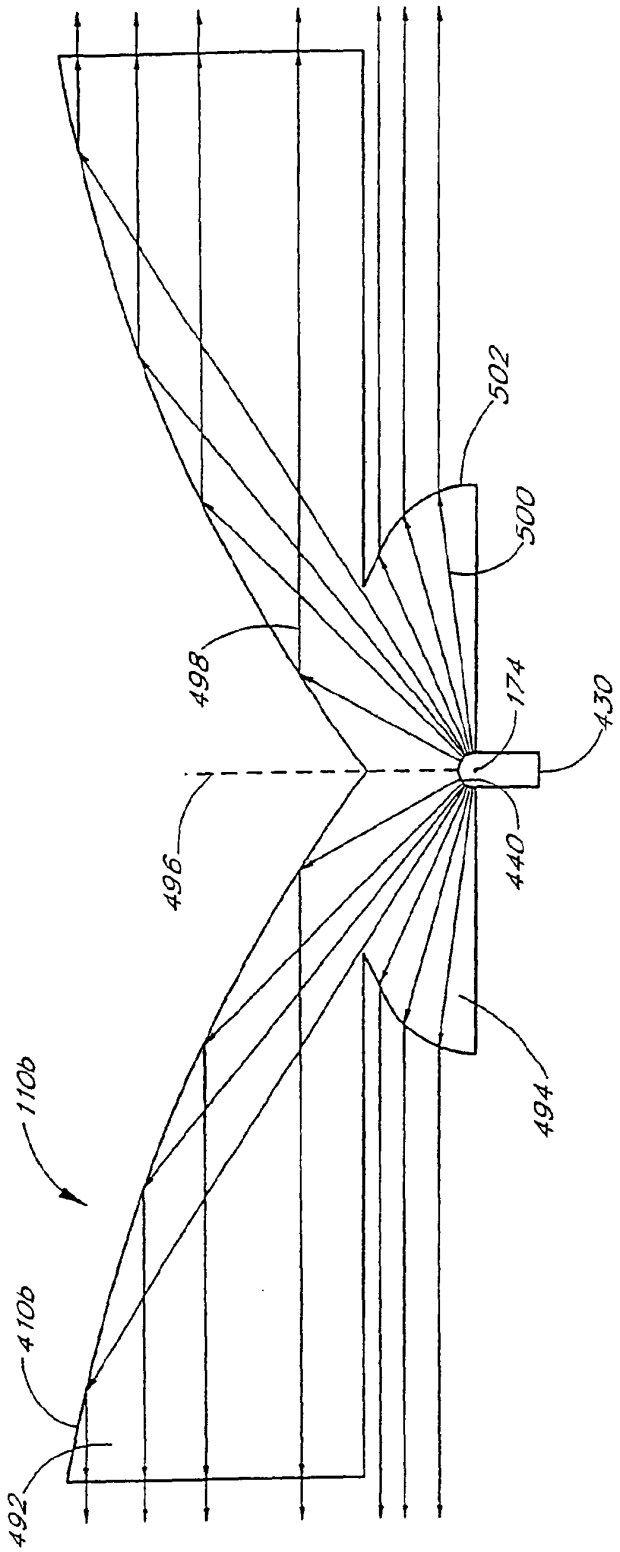

FIG. 12

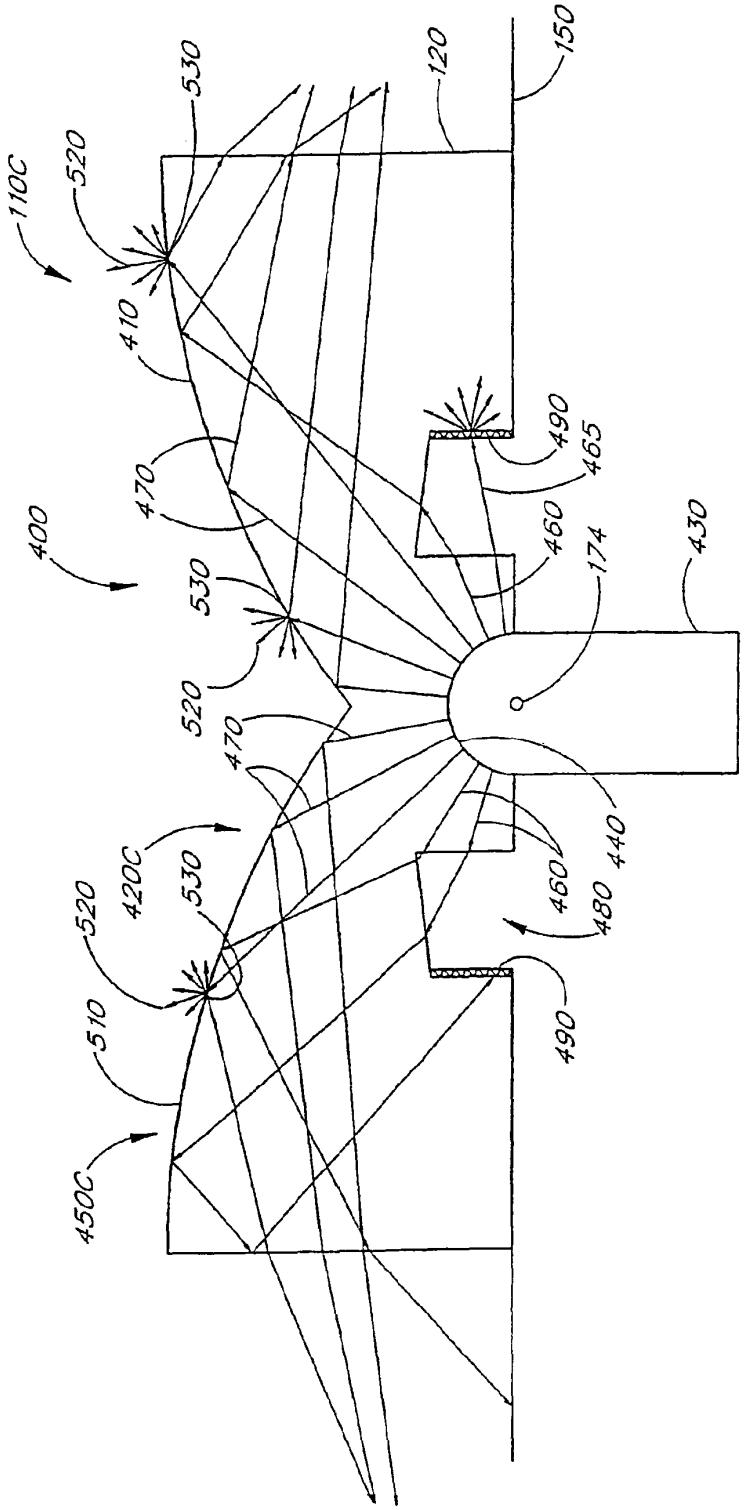
110C
520
530
410
470
400
530
520
470
420C
530
520
510
450C
120
150
490
465
460
174
430
440
460
480
490

FIG. 13

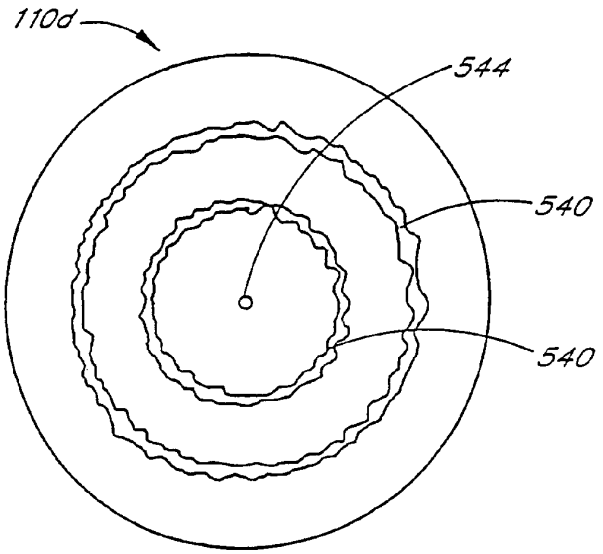

FIG. 14

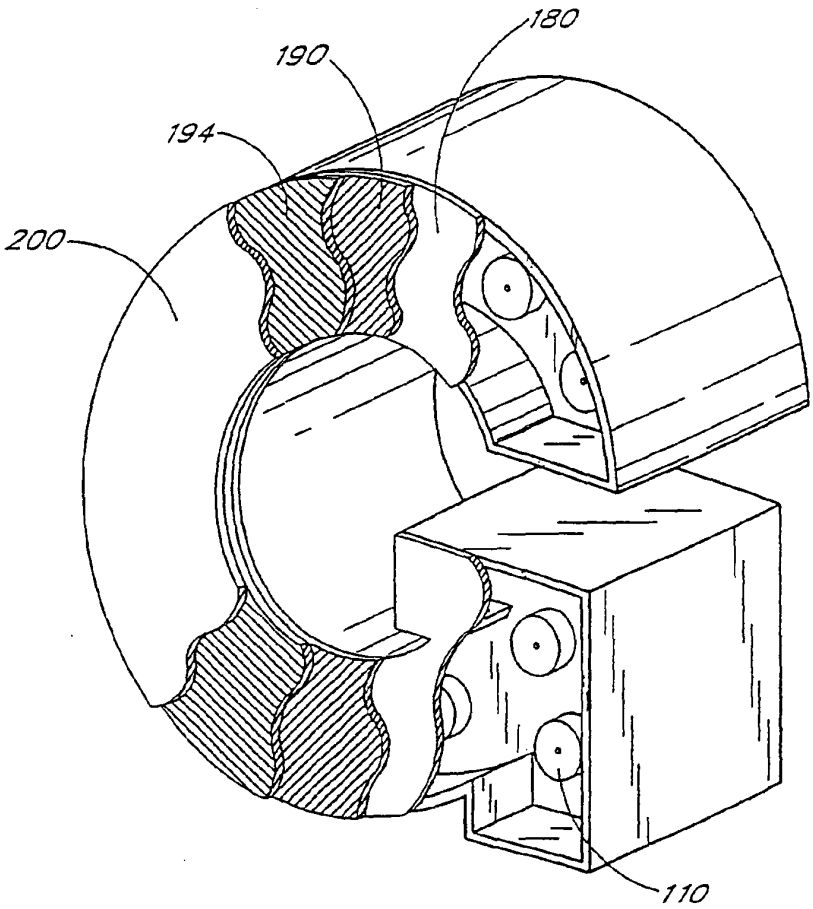

FIG. 15

LIGHTING APPARATUS HAVING LOW PROFILE

Publication number: DE69723101 (T2)
Publication date: 2003-12-18
Inventor(s): PELKA G [US]; POPOVICH JOHN [US]; QIAO YONG [US] +
Applicant(s): TELEDYNE LIGHTING & DISPLAY [US] +
Classification:
- international: ***F21V8/00; G04B19/30;*** *F21Y101/02; F21Y103/00;* **F21V8/00; G04B19/30**; (IPC1-7): F21V8/00
- European: G02B6/00L6I4R; G02B6/00L6I4S4; G02B6/00L6O4G; G02B6/00L6O4S4; G02B6/00L6O16; G04B19/30
Application number: DE19976023101T 19971209
Priority number(s): US19960764298 19961212; US19970936717 19970924; WO1997US22742 19971209

Also published as:
WO9826212 (A1)
US6647199 (B1)
JP2002512727 (T)
EP0944800 (A1)
EP0944800 (B1)
more >>

Abstract not available for DE 69723101 (T2)
Abstract of corresponding document: **WO 9826212 (A1)**

Disclosed is a low profile lighting apparatus (170) that is particularly advantageous for use as a backlight for illuminating a display. The lighting apparatus (170) includes a waveguide (172) coupled to a light source (180) for injecting light into the waveguide (170). The waveguide (170) includes a plurality of elongate structures for ejecting light propagating within the waveguide (170) through a predetermined surface of the waveguide. Another embodiment of the waveguide (426) includes a central region (74) of reduced thickness that redirects light propagating within the waveguide (426). The lighting apparatus (170) has a low profile so it is particularly useful in areas of limited space.

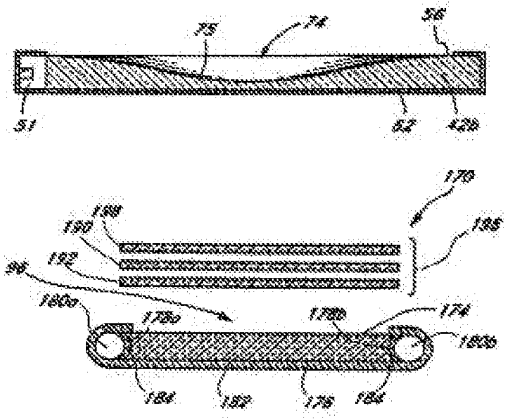

Data supplied from the ***espacenet*** database — Worldwide

(19) BUNDESREPUBLIK DEUTSCHLAND

DEUTSCHES PATENT- UND MARKENAMT

(12) Übersetzung der europäischen Patentschrift

(97) EP 0 944 800 B 1

(10) DE 697 23 101 T 2

(51) Int. Cl.[7]: F 21 V 8/00

DE 697 23 101 T 2

(21) Deutsches Aktenzeichen: 697 23 101.1
(86) PCT-Aktenzeichen: PCT/US97/22742
(96) Europäisches Aktenzeichen: 97 950 921.3
(87) PCT-Veröffentlichungs-Nr.: WO 98/026212
(86) PCT-Anmeldetag: 9. 12. 1997
(87) Veröffentlichungstag der PCT-Anmeldung: 18. 6. 1998
(97) Erstveröffentlichung durch das EPA: 29. 9. 1999
(97) Veröffentlichungstag der Patenterteilung beim EPA: 25. 6. 2003
(47) Veröffentlichungstag im Patentblatt: 18. 12. 2003

(30) Unionspriorität:
764298 12. 12. 1996 US
936717 24. 09. 1997 US

(73) Patentinhaber:
Teledyne Lighting and Display Products, Inc., Hawthorne, Calif., US

(74) Vertreter:
Vossius & Partner, 81675 München

(84) Benannte Vertragstaaten:
AT, BE, CH, DE, DK, ES, FI, FR, GB, GR, IE, IT, LI, LU, MC, NL, PT, SE

(72) Erfinder:
PELKA, G., David, Los Angeles, US; POPOVICH, John, Del Mar, US; QIAO, Yong, Arcadia, US

(54) BELEUCHTUNGSVORRICHTUNG MIT NIEDRIGEM PROFIL

DE 697 23 101 T 2

Anmerkung: Innerhalb von neun Monaten nach der Bekanntmachung des Hinweises auf die Erteilung des europäischen Patents kann jedermann beim Europäischen Patentamt gegen das erteilte europäische Patent Einspruch einlegen. Der Einspruch ist schriftlich einzureichen und zu begründen. Er gilt erst als eingelegt, wenn die Einspruchsgebühr entrichtet worden ist (Art. 99 (1) Europäisches Patentübereinkommen).

Die Übersetzung ist gemäß Artikel II § 3 Abs. 1 IntPatÜG 1991 vom Patentinhaber eingereicht worden. Sie wurde vom Deutschen Patent- und Markenamt inhaltlich nicht geprüft.

BUNDESDRUCKEREI 10.03 603 510/417/3G

EP-B-0 944 800
(97 95 0921.3)
TELEDYNE LIGHTING AND DISPLAY PRODUCTS, INC.
u.Z.: D 1976 EP

Beleuchtungsvorrichtung mit einem niedrigen Profil

Die vorliegende Erfindung betrifft eine Beleuchtungsvorrichtung. Die vorliegende Erfindung betrifft insbesondere eine Beleuchtungsvorrichtung mit einem niedrigen Profil, wobei ein Wellenleiter zur Beleuchtung verwendet wird. Die Erfindung ist besonders vorteilhaft für eine Verwendung als eine Hintergrundbeleuchtung einer Anzeige.

Hintergrundbeleuchtungen können zum Beleuchten mechanischer Anzeigen, wie analoger Uhren oder Automobil-Meßanzeigen, sowie elektronischer Anzeigen, wie Flüssigkristallanzeigen, die bei Mobiltelefonen und Pagern sowie PDAs (Personal Digital Assistants) verwendet werden, eingesetzt werden. Weil sich viele Hintergrundbeleuchtungsanwendungen auf kleinere Anzeigen beziehen, bei denen der Platz kostbar ist, ist es wünschenswert, die Dicke dieser Hintergrundbeleuchtungen zu verringern, während die Beleuchtungsfläche noch aufrechterhalten wird. Bei Hintergrundbeleuchtungen sind daher verkleinerte Seitenverhältnisse erforderlich, die als das Verhältnis zwischen der Dicke der Hintergrundbeleuchtung und der Länge des Beleuchtungsbereichs definiert sind.

Bei einem Typ einer Hintergrundbeleuchtung wird eine Lichtquelle in der Art einer Leuchtdiode (LED) verwendet, die mit einem Wellenleiter gekoppelt ist, in den Licht eingeführt wird. Die Lichtquelle ist typischerweise an einem Außenrand des Wellenleiters angebracht und wird mit Energie versorgt, damit sie Licht in den Wellenleiter emittiert. Das Licht macht zwischen den Flächen des Wellenleiters mehrere Reflexionen durch, bevor es durch eine obere Fläche hindurchtritt, um die Anzeige zu beleuchten.

Eine Schwierigkeit, die mit solchen Hintergrundbeleuchtungen verbunden ist, besteht darin, daß sie über die Oberfläche des Wellenleiters keine gleichmäßige Intensität erzeugen. Das Licht verliert an Intensität, wenn es sich außerhalb der Lichtquelle ausbreitet. Folglich nimmt die Intensität des aus dem Wellenleiter austretenden Lichts mit zunehmendem Abstand von der Lichtquelle ab. Dies führt dazu, daß die Teile des Wellenleiters, die fern von der Lichtquelle liegen, eine verringerte Intensität aufweisen.

Es besteht daher ein Bedarf an einer wirksamen Hintergrundbeleuchtung mit einem niedrigen Seitenverhältnis, wodurch über die gesamte Beleuchtungsfläche ein im wesentlichen gleichmäßiges Beleuchtungsprofil bereitgestellt wird.

Zum Stand der Technik gehören verschiedene Vorrichtungen zum Koppeln von Licht von einer Lichtquelle in einen Wellenleiter. Beispielsweise ist in EP-A-0 821 820, das ein Dokument nach Artikel 54(3) EPÜ ist, eine Beleuchtungsvorrichtung offenbart, die einen Körper aufweist, der aus einem stoß- und bruchfesten Material, wie Acrylglas, besteht, das entweder transparent oder lichtdurchlässig sein kann. Der Körper hat zwei ebene, parallele Außenflächen, eine vordere Fläche und eine hintere Fläche, welche durch Seitenwände miteinander verbunden sind. In jeder der Seitenwände ist eine Rille ausgebildet, und eine bandförmige Lichtquelle, die beispielsweise einen elektrolumineszenten Film aufweist, ist in dieser Rille angeordnet. Durch Einsetzen der Lichtquelle in die Rille tritt im wesentlichen die gesamte verwendbare Lichtausgabe der bandförmigen Lichtquelle in den Körper ein. Das Licht innerhalb des Körpers soll aus der vorderen Fläche austreten, während die der vorderen Fläche entgegengesetzte hintere Fläche Licht auf die vordere Fläche reflektiert.

In EP-A-0 403 764 ist eine beleuchtete Anzeigeeinheit offenbart, welche eine Lichtführungsplatte aufweist, die zum Beleuchten von Logosymbolen darauf dient. Ein elektrisches Beleuchtungselement in der Art einer LED ist in der Nähe eines seitlichen Rands der Lichtführungsplatte angeordnet, um

Licht in diese einzuleiten. Die Lichtführungsplatte ist erheblich dünner als das beleuchtende Element, beispielsweise die LED, weshalb das beleuchtende Element in einer Leiste angebracht ist, die an den seitlichen Rändern der Lichtführungsplatte befestigt ist. Um zu gewährleisten, daß das gesamte Licht von der LED zur Lichtführungsplatte laufen kann, weist die Lichtführungsleiste Außenflächen auf, die zumindest teilweise reflektieren.

Es verbleibt jedoch noch ein Bedarf an einer Vorrichtung und einem Verfahren zum gleichmäßigen Verteilen aus den Wellenleitern austretenden Lichts.

Die vorliegende Erfindung ist durch die Merkmale aus den Ansprüchen definiert.

Ein Aspekt der vorliegenden Erfindung betrifft eine Beleuchtungsvorrichtung zum Beleuchten eines Beleuchtungsbereichs einer Anzeige. Die Beleuchtungsvorrichtung weist einen Wellenleiter auf, der zur Anbringung neben der Anzeige eingerichtet ist, um den Beleuchtungsbereich der Anzeige zu beleuchten. Der Wellenleiter weist eine obere Fläche mit einem optischen Ausgangsbereich, dessen Größe dem Beleuchtungsbereich entspricht, eine untere Fläche, die von der oberen Fläche beabstandet ist, und eine Seitenfläche, die zwischen der oberen und der unteren Fläche verläuft, auf. Ein reflektierendes Material ist neben der unteren Fläche und der Seitenfläche des Wellenleiters angeordnet. Zumindest eine Lichtquelle ist angebracht, um Licht in der Nähe eines Außenbereichs des Wellenleiters zwischen der oberen und der unteren Fläche einzugeben. Der Wellenleiter weist weiterhin eine Lichtausgabeeinrichtung an einer von der oberen und der unteren Fläche auf, die dafür konfiguriert ist, sich zwischen den Flächen ausbreitendes Licht zur oberen Fläche hin umzulenken, so daß es durch diese hindurchtritt. Die Lichtausgabeeinrichtung ist dafür eingerichtet, über den optischen Ausgangsbereich der oberen Fläche ein vorgewähltes Beleuchtungsprofil bereitzustellen.

Ein weiterer Aspekt betrifft eine Beleuchtungsvorrichtung mit einem Wellenleiter, der ein Paar entgegengesetzter Flächen aufweist. Jede der Flächen ist zumindest teilweise reflektierend, und zumindest eine der Flächen ist teilweise durchlässig. Jede der Flächen hat einen Reflexionsgrad, der größer als die Durchlässigkeit der mindestens einen Fläche ist.

Ein weiterer Aspekt betrifft eine Beleuchtungsvorrichtung mit einem planaren Wellenleiter, der einen Außenrand und eine in der Nähe des Außenrands angebrachte Lichtquelle aufweist, um Licht entlang einem Weg, der sich von der Lichtquelle zu einem optischen Umlenker in dem Wellenleiter erstreckt, in den Wellenleiter zu lenken. Der optische Umlenker in dem Weg richtet Lichtstrahlen von dem Weg zum Außenbereich des Wellenleiters um.

Ein weiterer Aspekt betrifft eine Beleuchtungsvorrichtung mit einer oberen Fläche, einer unteren Fläche, die von der oberen Fläche beabstandet ist und mit der oberen Fläche zusammenwirkt, um einen Wellenleiter mit einer Dicke zu bilden, die durch den Abstand zwischen der oberen und der unteren Fläche definiert ist, und mindestens einer Festkörper-Punktlichtquelle, die angebracht ist, um Licht in den Wellenleiter zwischen den Flächen einzugeben. Eine der Flächen hat eine Krümmung in bezug auf die andere Fläche, wodurch eine erhebliche Änderung der Dicke des Wellenleiters in einem gewählten Bereich von diesem erzielt wird. Die Änderung folgt einer geometrischen Kontur, die so gewählt ist, daß Licht, das sich zwischen den Flächen des Wellenleiters ausbreitet, so umgelenkt wird, daß das umgelenkte Licht aus der oberen Fläche des Wellenleiters austritt.

Ein weiterer Aspekt betrifft eine Beleuchtungsvorrichtung mit einem Wellenleiter, der eine obere und eine untere Fläche und einen Außenrand aufweist. Der Wellenleiter hat eine Dicke, die durch den Abstand zwischen der oberen und der unteren Fläche definiert ist. Die Dicke am Außenrand ist von der Dicke in einem Bereich zwischen entgegengesetzten Seiten

des Außenrands erheblich verschieden. Die Dicke weist eine Geometrie auf, die so gewählt ist, daß die Ausgabe von Licht aus der oberen Fläche zwischen den entgegengesetzten Seiten verstärkt wird. Mindestens eine Lichtquelle ist in der Nähe des Außenrands angeordnet, um Licht in den Wellenleiter zwischen der oberen und der unteren Fläche einzuführen.

Ein weiterer Aspekt betrifft eine Beleuchtungsvorrichtung mit einem Wellenleiter aus einem festen Material, wobei der Wellenleiter eine obere Fläche, eine untere Fläche und eine Seitenfläche aufweist. Eine Lichtquelle ist angebracht, um Licht in den Wellenleiter einzugeben, und ein reflektierendes Material ist einer der oberen und der unteren Fläche gegenüberliegend angeordnet, wobei mindestens ein Abschnitt von einer von der oberen und der unteren Fläche ein Muster langgestreckter Strukturen aufweist, deren Dichte im allgemeinen mit dem Abstand von der Lichtquelle zunimmt.

Gemäß einem weiteren Aspekt ist eine Beleuchtungs- und Anzeigevorrichtung offenbart, die eine optische Wellenleiterschicht und einen Beleuchtungskoppler, der in einen Innenbereich der Wellenleiterschicht eingebettet ist, aufweist. Gemäß einer Ausführungsform weist der Beleuchtungskoppler eine oder mehrere lichtemittierende Halbleitervorrichtungen auf. Ein Abschnitt der optischen Wellenleiterschicht hat ein Paar symmetrischer (a) nichtplanarer, gekrümmter Flächen oder (b) mehrere ebene, planare Flächen, die die nichtplanare, gekrümmte Fläche annähern. Das Paar symmetrischer Flächen bildet eine Spitze, die auf der Achse der einen oder mehreren lichtemittierenden Halbleitervorrichtungen liegt, um eine innere Totalreflexion von Licht von der einen oder den mehreren lichtemittierenden Halbleitervorrichtungen in die Wellenleiterschicht zu erzeugen. Anzeigeelemente sind an Flächen der Wellenleiterschicht ausgebildet, um zu bewirken, daß Licht von der Wellenleiterschicht emittiert wird.

Ein weiterer Aspekt betrifft eine Beleuchtungs- und Anzeigevorrichtung, die eine optische Wellenleiterschicht aufweist, wobei ein Beleuchtungskoppler in einen Innenbereich

der Wellenleiterschicht eingebettet ist, wobei der Beleuchtungskoppler eine oder mehrere lichtemittierende Halbleitervorrichtungen aufweist. An der Oberfläche der Wellenleiterschicht ausgebildete Anzeigeelemente bewirken, daß Licht von der Wellenleiterschicht emittiert wird.

Ein weiterer Aspekt betrifft eine Beleuchtungs- und Anzeigevorrichtung, die eine optische Wellenleiterschicht mit einem in einen Innenbereich der Wellenleiterschicht eingebetteten Beleuchtungskoppler aufweist. Gemäß einer Ausführungsform weist der Beleuchtungskoppler eine oder mehrere lichtemittierende Halbleitervorrichtungen auf, wobei jede der einen oder mehreren lichtemittierenden Halbleitervorrichtungen eine Längsachse aufweist, die zu der Fläche der optischen Wellenleiterschicht parallel verläuft. Im Innenbereich der Wellenleiterschicht kann ein Loch oder eine Vertiefung ausgebildet sein, in der die eine oder die mehreren lichtemittierenden Halbleitervorrichtungen angeordnet sind. Die Vorrichtung kann auch Anzeigeelemente aufweisen, die an der Oberfläche der Wellenleiterschicht ausgebildet sind, um zu bewirken, daß Licht von der Wellenleiterschicht emittiert wird.

Ein weiterer Aspekt betrifft eine Beleuchtungsvorrichtung, die einen Wellenleiter mit einem in einen Innenbereich von diesem eingebetteten Beleuchtungskoppler aufweist. Der Wellenleiter hat außerhalb des Innenbereichs im wesentlichen parallele obere und untere Flächen, so daß Licht dazwischen geleitet wird. Der Beleuchtungskoppler weist eine Brechungsindex-Grenzfläche auf, die konfiguriert ist, um Lichtstrahlen einzufangen, die entlang einer Linie laufen, die einen kleineren Winkel als den kritischen Winkel der inneren Totalreflexion mit mindestens einer von der oberen und der unteren Fläche bildet, so daß die eingefangenen Lichtstrahlen dazwischen injiziert werden, um sich außerhalb des Innenbereichs auszubreiten. Gemäß einer Ausführungsform weist der Beleuchtungskoppler eine Fläche auf, die für die innere Totalreflexion des darauf fallenden Lichts konfiguriert ist. Der Beleuchtungskoppler gemäß dieser Ausführungsform ist aus einem

einzigen Stück transparenten Materials integriert mit dem Wellenleiter ausgebildet, und die reflektierende Fläche ist unbeschichtet. Eine Punktlichtquelle ist zumindest teilweise, vorzugsweise vollständig, innerhalb eines im Wellenleiter neben der innen totalreflektierenden Fläche ausgebildeten Hohlraums angeordnet. Anzeigeelemente können an mindestens einer der Flächen vorhanden sein, um Licht aus dem Wellenleiter auszugeben. Zusätzlich kann an mindestens einer von der oberen und der unteren Fläche ein diffusives reflektierendes Material vorhanden sein.

Gemäß einem weiteren Aspekt ist eine Beleuchtungsvorrichtung offenbart, die eine Vorrichtung, welche Licht emittiert, und einen optischen Hohlraum, der durch diffusive reflektierende Flächen gebildet ist, aufweist, wobei der Hohlraum einen Ausgangsbereich aufweist, durch den Licht aus dem Hohlraum hindurchtritt. Die Lichtemissionsvorrichtung ist angebracht, um dem Hohlraum Licht zuzuführen, während sie vor einer direkten Betrachtung durch den Ausgangsbereich verborgen ist. Der Hohlraum hat eine diffus reflektierende Oberfläche, und der Ausgangsbereich hat auch eine Fläche. Das Flächenverhältnis zwischen dem Ausgangsbereich und der Summe von (i) der Fläche des Ausgangsbereichs und (ii) der Oberfläche des Hohlraums beträgt mindestens 0,05. Zusätzlich hat der Hohlraum eine Tiefe und der Ausgangsbereich eine Bisektorabmessung von Rand zu Rand, wobei das Verhältnis zwischen der Tiefe und der Bisektorabmessung erheblich kleiner ist als 0,1. Die Beleuchtungsvorrichtung weist zusätzlich eine Winkelspektrum-Beschränkungseinrichtung auf, die angeordnet ist, um die Ausgangsbeleuchtung durch den Ausgangsbereich auf einen vorbestimmten Winkelbereich zu beschränken.

Ein weiterer Aspekt der Erfindung betrifft ein Beleuchtungsverfahren. Das Verfahren umfaßt das Erzeugen einer Beleuchtung von einem optischen Hohlraum, der durch diffus reflektierende Flächen gebildet ist, und das Ausgeben der Beleuchtung aus dem Hohlraum durch einen Ausgangsbeleuchtungsbereich. Das Erzeugen der Beleuchtung umfaßt das Lenken

von Lichtstrahlen von einer Beleuchtungsquelle in den Hohlraum, so daß die Beleuchtungsquelle durch den Ausgangsbeleuchtungsbereich nicht sichtbar ist. Das Verfahren umfaßt weiterhin das Beschränken des Winkelspektrums der Beleuchtung von dem Ausgangsbeleuchtungsbereich auf einen vorbestimmten Winkelbereich und das Anbringen des optischen Hohlraums zum Beleuchten mindestens eines Teils eines Raums.

Gemäß einem weiteren Aspekt ist ein Verfahren zum Herstellen einer Beleuchtungsvorrichtung offenbart. Eine Ausführungsform des Verfahrens umfaßt das Wickeln einer flexiblen Folie eines reflektierenden Materials um eine Seite einer rohrförmigen Lichtquelle, das Gegenüberstellen eines einen optischen Hohlraum bildenden Elements mit einer anderen Seite der rohrförmigen Lichtquelle, so daß Licht von der Quelle in den optischen Hohlraum eingeleitet wird, und das Befestigen der flexiblen Folie an dem Element, so daß die Folie die rohrförmige Quelle gegenüber dem Element hält.

Kurzbeschreibung der Zeichnung

Diese und andere Merkmale der Erfindung werden nun mit Bezug auf die Zeichnungsbestandteile einer bevorzugten Ausführungsform beschrieben, welche als die Erfindung erläuternd und diese nicht einschränkend anzusehen sind.

Es zeigen:

Figur 1 eine perspektivische Ansicht einer Armbanduhr gemäß einer Ausführungsform einer Beleuchtungsvorrichtung,

Figur 1A eine Schnittansicht der Uhr aus Figur 1 entlang einer Linie 1A - 1A,

Figur 2 eine Draufsicht der zum Beleuchten der Uhr aus Figur 1 verwendeten Beleuchtungsvorrichtung,

Figur 3 eine Schnittansicht der Beleuchtungsvorrichtung aus Figur 2 entlang der Linie 3 - 3,

Figur 4 eine Schnittansicht der Beleuchtungsvorrichtung aus Figur 2 entlang der Linie 4 - 4,

Figur 4A eine vergrößerte Ansicht eines Teils von Figur 4,

Figur 4B eine Schnittansicht ähnlich derjenigen aus Figur 4, wobei sich jedoch langgestreckte Strukturen auf der oberen Fläche befinden,

Figur 4C eine Schnittansicht ähnlich derjenigen aus Figur 4, wobei den gesamten Wellenleiter jedoch ein reflektierendes Material umgibt,

Figur 5 eine Draufsicht einer alternativen Ausführungsform eines Wellenleiters zur Verwendung bei der Beleuchtungsvorrichtung aus Figur 2,

Figur 6 eine Draufsicht einer weiteren Ausführungsform eines Wellenleiters zur Verwendung bei der Beleuchtungsvorrichtung aus Figur 2,

Figur 7 eine Draufsicht einer weiteren Ausführungsform eines Wellenleiters zur Verwendung bei einer Beleuchtungsvorrichtung,

Figur 8 eine Draufsicht eines Wellenleiters, worin eine andere Ausführungsform eines optischen Umlenkers dargestellt ist,

Figur 9 eine Schnittansicht einer mit einer lichtverstärkenden Struktur verwendeten Beleuchtungsvorrichtung,

Figur 10 eine Draufsicht eines Wellenleiters mit einer Einsenkung zum Umlenken von Lichtstrahlen,

Figur 11 eine Schnittansicht der Beleuchtungsvorrichtung aus Figur 10 entlang der Linie 11 - 11,

Figur 12 eine perspektivische Ansicht einer alternativen Ausführungsform einer Beleuchtungsvorrichtung,

Figur 13 eine Schnittansicht der Beleuchtungsvorrichtung aus Figur 12,

Figur 14 eine perspektivische Ansicht eines bei der Beleuchtungsvorrichtung aus Figur 12 verwendeten Gehäuses,

Figur 15 eine perspektivische Ansicht einer Beleuchtungsvorrichtung mit einem innen totalreflektierenden Bereich,

Figur 16 eine Schnittansicht der Beleuchtungsvorrichtung aus Figur 15 entlang der Linie 16 - 16,

Figur 16A eine vergrößerte Ansicht eines Teils von Figur 16,

Figur 17 eine perspektivische Ansicht einer alternativen Ausführungsform einer Beleuchtungsvorrichtung mit einem innen totalreflektierenden Bereich,

Figur 18 eine Schnittansicht der Beleuchtungsvorrichtung aus Figur 17 entlang der Linie 18 - 18,

Figur 19 eine schematische Seitenansicht einer "Kugellinsen"-LED aus dem Stand der Technik,

Figur 20 eine schematische Seitenansicht einer "bloßen" LED aus dem Stand der Technik,

Figur 21 eine perspektivische Ansicht eines Ausgangszeichens gemäß einer alternativen Ausführungsform einer Beleuchtungsvorrichtung,

Figur 22 eine perspektivische Hinteransicht eines Automobils mit Rückleuchten, die eine Beleuchtungsvorrichtung aufweisen,

Figur 23 eine Draufsicht einer Armbanduhr mit einer alternativen Ausführungsform einer Beleuchtungsvorrichtung,

Figur 24 eine seitliche Schnittansicht des Ausgangszeichens aus Figur 21 entlang der Linie 24 - 24,

Figur 25 eine perspektivische Ansicht eines Ausgangszeichens gemäß einer weiteren Ausführungsform einer Beleuchtungsvorrichtung,

Figur 26 eine Seitenansicht eines Ausgangszeichens mit extraktiven Anzeigeelementen,

Figur 27 eine Seitenansicht eines extraktiven Anzeigeelements,

Figur 28 eine Seitenansicht einer alternativen Ausführungsform eines extraktiven Anzeigeelements,

Figur 29 eine perspektivische Ansicht eines Ausgangszeichens mit kreisförmigen Rillen zum Entnehmen von Licht und

Figur 30 eine seitliche Schnittansicht des Ausgangszeichens aus Figur 29.

Detaillierte Beschreibung der bevorzugten Ausführungsform

Mit Bezug auf die Figuren 1 und 1A sei bemerkt, daß eine Ausführungsform der vorliegenden Erfindung als eine Hinter-

grundbeleuchtungsvorrichtung 26 für eine Armbanduhr 20 verwendet wird. Wenngleich die Armbanduhr 20 wie dargestellt eine im wesentlichen kreisförmige Gestalt aufweist, ist zu verstehen, daß sie eine Vielzahl von Formen aufweisen kann.

Ein Außengehäuse 22 der Armbanduhr 20 schließt eine dünne Scheibe 30 aus einem im wesentlichen transparenten Material ein, das in einem Abstand unter einem Uhrenkristall 24 angeordnet ist. Die Scheibe 30 hat eine obere Anzeigefläche 32 und eine entgegengesetzte untere Fläche 34. Die Anzeigefläche 32 weist Sichthinweise 35 (Figur 1), wie Zahlen zum Angeben der Zeit, auf, wenngleich auch andere Sichthinweise angezeigt werden könnten. Zwei Zeiger 36 der Uhr 20 sind zur Drehung um einen Stamm 38 angebracht, der sich durch die Scheibe 30 erstreckt. Der Stamm wird in wohlbekannter Weise durch einen Uhrenmechanismus 40 angetrieben. Alternativ kann die Scheibe 30 eine Flüssigkristallanzeige aufweisen, in der Sichthinweise, wie die Zeiger und Zahlen, elektrisch erzeugt werden.

Wie in Figur 1A dargestellt ist, ist die Beleuchtungsvorrichtung 26 zwischen der Scheibe 30 und dem Uhrenmechanismus 40 zum Beleuchten der Scheibe 30 angeordnet. Die Beleuchtungsvorrichtung 26, die vorzugsweise in Kontakt mit der Scheibe 30 steht, weist einen Wellenleiter 42 und eine entlang einem Außenrand des Wellenleiters 42 angeordnete Lichtquelle 44 auf.

Bei der dargestellten Ausführungsform trägt das Gehäuse 22 die Scheibe 30 und die Beleuchtungsvorrichtung 26 in einander gegenüberstehender Anordnung. Die Scheibe 30 ist so angebracht, daß ihr Außenbereich durch einen ersten ringförmigen Wulst 46 gehalten wird, der die Anzeigefläche 32 teilweise bedeckt, so daß eine Sichtfläche oder ein Beleuchtungsbereich der Anzeigefläche 32 festgelegt wird. Der Wellenleiter 42, dessen Durchmesser etwas größer ist als derjenige der Scheibe 30, ist so angebracht, daß sein Außenbereich durch einen zweiten ringförmigen Wulst 48 im Gehäuse 22 gehalten wird. Der zweite ringförmige Wulst 48 ist so bemessen, daß er die Lichtquelle 44 abschirmt, so daß sie

durch den Beleuchtungsbereich der Anzeigefläche 32 nicht direkt sichtbar ist. Der Durchmesser des Beleuchtungsbereichs kann beispielsweise 27 mm betragen.

Wie in Figur 2 dargestellt ist, hat der Wellenleiter 42 eine kreisförmige Gestalt, die zum Beleuchten einer kreisförmigen Uhr optimal ist, wenngleich für verschiedene Anwendungen andere Formen verwendet werden können. Die Lichtquelle 44 ist innerhalb einer dreieckigen oder V-förmigen Kerbe 50 im Außenrand des Wellenleiters 42 angebracht. Die Kerbe 50 wirkt als ein optischer Umlenker, der von der Lichtquelle 44 ausgesendetes Licht unter Verwendung von Brechungsindexdifferenzen an der von den Seiten der Kerbe 50 gebildeten Grenzfläche 52 umlenkt. Gemäß einer bevorzugten Ausführungsform ist der V-förmige optische Umlenker 50 symmetrisch, so daß eine Linie, die durch seinen Scheitelpunkt und die Mitte des Wellenleiters 42 verläuft, die V-förmige Kerbe schneidet.

Gemäß einer bevorzugten Ausführungsform ist die Lichtquelle eine einzelne Festkörper-Punktlichtquelle in der Art einer Leuchtdiode (LED) 44, die an einem Träger oder einer Platine (nicht dargestellt) angebracht ist. Der Träger, an dem die LED 44 angebracht ist, ist unter Verwendung eines Klebstoffs (nicht dargestellt) auf der Rückseite der Kerbe 50 (also dem offenen Ende gegenüber dem Scheitelpunkt) am Wellenleiter befestigt. Die LED 44, die typischerweise in Form eines Würfels aus einem Festkörpermaterial vorliegt, der Licht von jeder der mehreren Außenflächen (also der oberen Fläche und den vier Seiten) emittiert, ist von den Seiten der Kerbe 50 beabstandet, wobei sich dazwischen Luft befindet. Die Brechungsindexdifferenz zwischen dem Wellenleiter und der Luft erzeugt die Brechungsindex-Grenzfläche 52, die bewirkt, daß Licht gebrochen bzw. gebeugt wird, wenn es in den Wellenleiter 42 eintritt. Gemäß diesem vorteilhaften Merkmal wird ein erheblicher Teil des durch die Grenzfläche 52 tretenden Lichts zu entgegengesetzten Seiten des Wellenleiters 42 gebrochen (also zu den Seiten, die im wesentlichen an die Lichtquelle 44 angrenzen und auf entgegengesetzten Seiten von dieser lie-

gen). Auf diese Weise werden die Bereiche des Wellenleiters 42, die sich auf den Seiten der Lichtquelle 44 befinden, wirksam beleuchtet, und der Umlenker 50 trägt dadurch zu einer gleichmäßigen Beleuchtung bei.

Der Wellenleiter 42 besteht vorzugsweise aus einem Material, das für von der LED 44 erzeugtes Licht transparent ist, wie aus einem transparenten Polymermaterial, und er kann durch verschiedene wohlbekannte Verfahren, wie maschinelles Bearbeiten oder Spritzgießen, hergestellt werden. Bevorzugte Materialien für den Wellenleiter 42 sind Acryl, Polycarbonat und Silikon. Acryl, das einen Brechungsindex von etwa 1,5 aufweist, ist kratzfest und ist kostengünstiger als Polycarbonat. Polycarbonat, das einen Brechungsindex von etwa 1,59 aufweist, weist bessere Temperatureigenschaften als Acryl auf. Polycarbonat weist gegenüber Acryl auch bessere mechanische Eigenschaften auf. Silikon hat einen Brechungsindex von etwa 1,43. Der Brechungsindex von Luft ist 1,0. Die Abmessungen des Wellenleiters 42 können variieren, wenngleich der Wellenleiter 42 in bezug auf seine Länge vorzugsweise sehr dünn ist, so daß ein niedriges Profil bereitgestellt wird. Der Abstand zwischen der oberen Fläche 56 und der unteren Fläche 58 liegt vorzugsweise in der Größenordnung von 1 - 3 mm, während der Durchmesser des Wellenleiters 42 typischerweise mindestens 2,0 mm beträgt.

Wie in Figur 2 dargestellt ist, erstrecken sich mehrere Anzeigeelemente mit langgestreckten Strukturen 54 über den Wellenleiter 42, um Licht umzulenken, das sich innerhalb des Wellenleiters 42 ausbreitet. Wenngleich sie als Linien dargestellt sind, haben die langgestreckten Strukturen 54 eine dreidimensionale Form, wie nachstehend detailliert beschrieben wird. Gemäß der erläuterten Ausführungsform sind die langgestreckten Strukturen 54 in einem Muster angeordnet, das aus einander schneidenden Linien besteht, die sich von einem gemeinsamen Punkt in der Mitte des Wellenleiters 42, durch den der Stamm 38 hindurchläuft, radial nach außen erstrecken. Die langgestreckten Strukturen 54 befinden sich vorzugsweise

in einem gleichen Winkelabstand von beispielsweise 0,3 Grad. Es wurde herausgefunden, daß das in der Uhr 20 verwendete Muster radialer Rillen sehr wirksam beim Beseitigen von "Schatten" ist, die andernfalls durch den Uhrenstamm 38 geworfen werden würden.

Wie in Figur 3 dargestellt ist, weist der Wellenleiter 42 eine obere Fläche 56 und eine entgegengesetzte untere Fläche 58 auf, die im wesentlichen parallel zueinander verlaufen. Eine Seiten- oder Randfläche 60 erstreckt sich zwischen der oberen Fläche 56 und der unteren Fläche 58 entlang dem Außenbereich des Wellenleiters 42. Wenngleich die Flächen 56, 58 für Hintergrundbeleuchtungsanwendungen typischerweise flach sind, können die Flächen 56, 58 auch als gekrümmte Flächen ausgebildet sein, beispielsweise wenn der Wellenleiter als ein Rücklicht für ein Automobil verwendet wird.

Ein diffusives reflektierendes Material 62 ist neben der unteren Fläche 58 und der Seitenfläche 60 des Wellenleiters 42 angeordnet, wobei das Material 62 vorzugsweise auch einen Randstreifen 61 an der oberen Fläche 56 bedeckt. Bei der erläuterten Ausführungsform ist der Randstreifen 61 breit genug, um die Kerbe 50 abzudecken, so daß der obere, der untere und der äußere Rand der Kerbe 50 von dem reflektierenden Material 62 bedeckt sind. Der Randstreifen ist vorzugsweise auch breit genug, damit die LED 44 nicht direkt von Betrachtungswinkeln von 75 Grad oder weniger betrachtet werden kann (wobei bemerkt sei, daß der Betrachtungswinkel von einer zur oberen Fläche 56 senkrechten Linie gemessen wird). Beispielsweise kann die Breite des Randstreifens der Breite des zweiten ringförmigen Wulsts 48 der Uhr 20 gleichen (Figur 1).

Das diffusive reflektierende Material 62, das einen Reflexionsgrad von mindestens 88 % aufweist, kann eine einzige Schicht oder mehrere Schichten aus diffus reflektierendem Band, wie DRP™ Backlight Reflector, hergestellt von W.L. Gore & Associates, aufweisen. Der DRP™ Backlight Reflector hat, abhängig von seiner Dicke und der Lichtwellenlänge,

einen Reflexionsgrad von etwa 97 % - 99,5 %. Alternativ könnte das reflektierende Material 62 eine Farbe oder eine Beschichtung aufweisen, die auf die Flächen 58 und 60 aufgebracht ist, wie weiße Hausfarbe oder ein exotischeres Material, wie die Spectraflect-Farbe von Labsphere Corporation. Der Reflexionsgrad der Spectraflect-Farbe ist erheblich höher als derjenige von Hausfarbe und beträgt etwa 98 %, während der Reflexionsgrad einer guten weißen Hausfarbe ungefähr 90 % beträgt.

Weil das reflektierende Material 62 die untere Fläche 58 und die Seitenfläche 60 sowie den Randstreifen auf der oberen Fläche 56 bedeckt, wird Licht in einem Ausgangsbeleuchtungsbereich oder einer Öffnung 65, die den mittleren unbedeckten Abschnitt der oberen Fläche 56 einschließt (also den Abschnitt der Fläche 56 innerhalb des Randstreifens 61) aus dem Wellenleiter emittiert. Es sei bemerkt, daß Lichtstrahlen, die unter einem Einfallswinkel (also dem Winkel des Strahls in bezug auf eine zur Fläche senkrechte Linie), der mindestens gleich einem kritischen Winkel ist, auf die obere Fläche 56 fallen, zur unteren Fläche 58 hin innen totalreflektiert werden. Das heißt, daß die obere Fläche 56 all dieses Licht in den Wellenleiter 42 zurückreflektiert. Lichtstrahlen, deren Einfallswinkel kleiner ist als der kritische Winkel, werden von der oberen Fläche 56 durchgelassen. Der Wert des kritischen Winkels hängt von der Brechungsindexdifferenz zwischen dem Wellenleiter 42 und der Scheibe 22 ab und ist Fachleuten bekannt. Für einen Wellenleiter 42 mit einem Brechungsindex von 1,5 beträgt der kritische Winkel etwa 42°, wenn er von Luft umgeben ist.

Wie in den Figuren 4 und 4A dargestellt ist, können die langgestreckten Strukturen 54 von Flächen 64 (Figur 4A) definierte Rillen aufweisen, die einen im wesentlichen dreieckigen oder V-förmigen Querschnitt aufweisen. Die langgestreckten Strukturen 54 ändern vorteilhafterweise den Einfallswinkel des zur oberen Fläche 56 hin reflektierten Lichts, um das Hindurchtreten durch diese zu verbessern. Das

heißt, daß schräge Flächen 64 Licht unter einem Einfallswinkel, der kleiner ist als der kritische Winkel, zur oberen Fläche 56 hin reflektieren, so daß dieses Licht durch die obere Fläche 56 tritt, statt innen totalreflektiert zu werden. Die langgestreckten Strukturen 54 werden auf diese Weise verwendet, um Lichtstrahlen "auszusenden", die andernfalls durch die obere Fläche 56 innen totalreflektiert werden könnten. Hierdurch wird die optische Wirksamkeit des Wellenleiters 42 in vorteilhafter Weise vergrößert, indem Licht abgegeben wird, das andernfalls einem Energieverlust durch wiederholte Reflexionen unterliegen würde. Die langgestreckten Strukturen sind durch eine Tiefe D und einen Scheitelwinkel θ, der die V-förmige Struktur 54 schneidet, definiert. Gemäß der bevorzugten Ausführungsform liegt D im Bereich von 1 - 2 Mikrometern, und der Winkel θ beträgt etwa 45 Grad. Vorzugsweise bleibt innerhalb der V-förmigen Struktur 54 ein Luftspalt erhalten (so daß die Rillen nicht mit dem reflektierenden Material gefüllt sind).

Die langgestreckten Strukturen 54 sind vorzugsweise so angeordnet, daß über den Beleuchtungsausgangsbereich des Wellenleiters im wesentlichen gleichmäßige Beleuchtungsprofile erreicht werden. Gemäß bevorzugten Ausführungsformen ist das Gleichmäßigkeitsverhältnis des Ausgangsbeleuchtungsbereichs, das als das Verhältnis zwischen der höchsten und der niedrigsten Beleuchtungsintensität innerhalb dieses Bereichs definiert ist, nicht größer als 2 zu 1.

Wie in Figur 4B dargestellt ist, sind die langgestreckten Strukturen 54 gemäß einer anderen bevorzugten Ausführungsform auf der oberen Fläche 56 an Stelle der unteren Fläche 58 angeordnet. Die weiteren Aspekte dieser Ausführungsform sind mit denen der in Figur 4 dargestellten Ausführungsform identisch.

Gemäß einer in Figur 4C dargestellten zusätzlichen Ausführungsform ist der gesamte Wellenleiter unter Einschluß der oberen Fläche 56, der unteren Fläche 58 und der Seitenflächen 60 von einem reflektierenden Material 63 bedeckt, das vor-

zugsweise vom gleichen diffus reflektierenden Typ ist wie das Material 62, das jedoch teilweise durchlässig und teilweise reflektierend ist. Zusätzlich hat das Material 63 einen Reflexionsgrad, der größer als seine Durchlässigkeit ist, so daß der Reflexionsgrad größer als 50 % ist und die Durchlässigkeit kleiner als 50 % ist. Gemäß einer bevorzugten Ausführungsform, die in der Uhr 20 verwendet werden kann, beträgt der Reflexionsgrad etwa 96 % und die Durchlässigkeit etwa 4 %. Diese Ausführungsform bietet eine Ausgangsbeleuchtung, die im wesentlichen gleichmäßig ist, selbst wenn die langgestreckten Strukturen 54 nicht vorhanden sind, wenngleich diese Strukturen noch wünschenswert sein können, um Schatten vom Uhrenstamm 38 zu verringern (Figur 1A). Diese Ausführungsform ist auch in der Hinsicht vorteilhaft, daß die Sichthinweise (Zahlen usw.) direkt auf das reflektierende Material 63 aufgebracht werden können, wodurch die Anzeigescheibe 30 überflüssig gemacht wird.

Verschiedene Typen von Rillenmustern können abhängig von der Situation verwendet werden, um die Gleichmäßigkeit der Beleuchtung innerhalb des zu beleuchtenden Bereichs zu verbessern. Mit Bezug auf Figur 5 sei bemerkt, daß die langgestreckten Strukturen 54 in einem Muster einander nicht schneidender gebogener Linien angeordnet werden können, die um die Lichtquelle 44 herum angeordnet sind. Gemäß einer bevorzugten Ausführungsform nimmt der Krümmungsradius der gebogenen Linien mit dem Abstand von der Punktquelle 44 zu. Zusätzlich liegen die Zentren des Krümmungsradius entlang einer Linie, die durch die Punktquelle und die Mitte des Beleuchtungsbereichs des Wellenleiters verläuft, wobei all diese Zentren entlang einer solchen Linie liegen (auf der Seite des Wellenleiters, die weiter von der Mitte des Wellenleiters als von der Quelle 44 entfernt ist). Die gebogenen Linien sind ungleichmäßig voneinander beabstandet, so daß ein Intensitätsverlust kompensiert wird, wenn sich das Licht von der Lichtquelle 44 nach außen ausbreitet. Insbesondere nimmt der Abstand zwischen den langgestreckten Strukturen 54 ab,

wenn der Abstand von der Lichtquelle 44 zunimmt, so daß die Dichte der langgestreckten Strukturen 54 mit zunehmender Entfernung von der Lichtquelle 44 zunimmt. Diese erhöhte Dichte der langgestreckten Strukturen 54 erhöht vorzugsweise das Aussenden von Lichtstrahlen in diesen Bereichen, wodurch der Abstand von der Quelle 44 kompensiert wird.

Wie in Figur 6 dargestellt ist, könnten die langgestreckten Strukturen 54 auch in einem komplexeren Muster angeordnet werden, das aus einer Kombination einfacherer Muster besteht. Beispielsweise könnten die Muster die Form gebogener Linien, die von den Lichtquellen 44 nach außen laufen, und gerader Linien, die sich von der Mitte des Wellenleiters 42 radial nach außen erstrecken, annehmen.

Figur 7 zeigt einen rechteckig geformten Wellenleiter 42. Ein solcher Wellenleiter wird vorzugsweise verwendet, um eine rechteckig geformte Anzeige zu beleuchten, wie sie bei Mobiltelefonen oder PDAs verwendet wird. Wenngleich kein reflektierendes Material dargestellt ist, sei bemerkt, daß diese Ausführungsform in der vorstehend beschriebenen Weise aufgebaut sein kann. Bei der erläuterten Ausführungsform sind mehrere Punktlichtquellen 44 gekoppelt, um Licht an beabstandeten Randorten entlang der Kante des Wellenleiters 42 einzuleiten. Weil mehrere Quellen verwendet werden, sind optische Umlenker in der Art der Kerbe 50 optional und können aufgenommen sein oder nicht. Die langgestreckten Strukturen 54 gemäß dieser Ausführungsform sind in konzentrischen Bögen um jede der Lichtquellen 44 angeordnet, wenngleich verschiedene andere Muster unter Einschluß der vorstehend erörterten erwogen werden.

Figur 8 zeigt eine alternative Ausführungsform, bei der die langgestreckten Strukturen 54 in einem Wellenleiter 42a durch Kratzen der oberen oder der unteren Fläche des Wellenleiters mit einem Schleifmittel in der Art von Sandpapier ausgebildet sind. Das Schleifen erfolgt vorzugsweise ungleichmäßig, so daß die Dichte der Kratzer oder Rillen mit dem Abstand von der Lichtquelle 44 zunimmt. Als ein spezi-

fisches Beispiel verlaufen die Rillen bei dem in Figur 8 dargestellten rechteckigen Wellenleiter in Längsrichtung des Rechtecks und nicht in Breitenrichtung. Das Rillenmuster ist auf einer lokalen Basis im allgemeinen amorph, auf einer globalen Basis jedoch im wesentlichen gerichtet und nicht zufällig.

Figur 8 zeigt auch eine alternative Ausführungsform eines optischen Umlenkers, der durch eine dreieckige Öffnung 50a, die sich im Außenbereich des Wellenleiters 42a durch diesen erstreckt, gebildet ist. Die Öffnung befindet sich zwischen der Lichtquelle 44 und dem Ausgangsbeleuchtungsbereich des Wellenleiters 42, und eine zwischen der Quelle und der Mitte dieses Bereichs gezogene Linie schneidet das Dreieck, während sie durch seinen Scheitelpunkt läuft. Wie dargestellt, weist die dreieckige Öffnung 50a zwei Seiten auf, die einander an einem Ort in der Nähe der Lichtquelle unter Bildung eines solchen Scheitelpunkts schneiden.

Die dreieckige Öffnung 50a ist mit einem Material in der Art von Luft gefüllt, dessen Brechungsindex von demjenigen des Materials des Wellenleiters 42 erheblich verschieden ist. Die Form des optischen Umlenkers 50a und die Brechungsindex-differenz bewirken, daß aus der Lichtquelle 44 austretendes Licht den optischen Umlenker 50a unter einem Einfallswinkel schneidet, der zu einer inneren Totalreflexion des Lichts zu entgegengesetzten Seiten des Wellenleiters 42 führt. Demgemäß lenkt der optische Umlenker 50a ebenso wie die Kerbe 50 den Weg von Lichtstrahlen zu Bereichen des Wellenleiters, die auf entgegengesetzten Seiten der Lichtquelle 44 liegen.

Mit Bezug auf Figur 9 sei bemerkt, daß die obere Fläche 56 des Wellenleiters 42 (oder alternative Ausführungsformen davon) mit einer Winkelspektrum-Beschränkungseinrichtung 72 bedeckt sein kann, die das Ausgangsstrahlungsmuster vom Ausgangsbeleuchtungsbereich 65 des Wellenleiters auf einen vorbestimmten Winkelbereich beschränkt (in diesem Zusammen-hang wird der Begriff "Spektrum" im Sinne eines Winkel-spektrums an Stelle eines Wellenlängenspektrums verwendet).

Die Winkelspektrum-Beschränkungseinrichtung 72 umfaßt eine planare mikroreplizierte optische Struktur in der Art eines holographischen Diffusors, eines binären Beugungsdiffusors oder eines Mikrolinsenfelds. Gemäß der bevorzugten Ausführungsform weist die Winkelspektrum-Beschränkungseinrichtung 72 einen die Helligkeit erhöhenden Film (BEF) auf, der zusätzlich dazu, daß er das Ausgangsspektrum beschränkt, die Intensität der Beleuchtung im Ausgangsbeleuchtungsbereich 65 erhöht. Der BEF 72 ist vorzugsweise in physikalischen Kontakt mit einem Diffusor 70 gebracht, so daß sie gemeinsam eine die Lichtqualität erhöhende Vorrichtung 73 bilden. Vorzugsweise ist der Diffusor 70 zwischen dem BEF 72 und dem Wellenleiter 42 und in Kontakt mit dem Wellenleiter 42 angeordnet. Der Zweck des Diffusors besteht darin, die Wirkung restlicher Ungleichmäßigkeiten, wie kosmetischer Unvollkommenheiten, in den Oberflächen des Wellenleiters 42 zu entfernen. Der Diffusor 70 besteht aus einem lichtdurchlässigen Material, typischerweise einer dünnen Kunststoffläche oder einem Volumendiffusor, welche beide durch eine sehr niedrige Absorption und minimale Energieverluste gekennzeichnet sind.

Wie vorstehend erwähnt wurde, beschränkt der BEF 72 die Ausgangsbeleuchtung auf definierte Begrenzungslinien und vergrößert auch die Helligkeit innerhalb des Ausgangsbeleuchtungsbereichs 65. Gemäß der bevorzugten Ausführungsform ist der BEF 72 ein im Handel erhältlicher Dünnfilm mit linearen Pyramidenstrukturen, wie ein Film vom Modell 90/50 von 3M. Der BEF läßt nur die Lichtstrahlen von dem Wellenleiter durch, die bestimmte Einfallswinkelkriterien in bezug auf die obere Fläche 56 erfüllen. Alle anderen Lichtstrahlen werden zur unteren Fläche 58 oder zu den Seitenflächen 60 hin in den Wellenleiter 42 zurückreflektiert, wo sie durch das reflektierende Material 62 reflektiert werden. Dadurch werden die reflektierten Strahlen "recycled", bis sie unter einem Winkel, der ermöglicht, daß sie durch den BEF 72 hindurchtreten, auf diesen fallen.

Wie wohlbekannt ist, konzentriert ein BEF in der Art des BEFs 72 die Beleuchtung innerhalb durch ein Paar zueinander geneigter Ebenen (die im Querschnitt ein "V" bilden) definierter Grenzen und stellt keine Konzentration in orthogonaler Richtung bereit. Bei manchen Anwendungen der Erfindung ist es bevorzugt, die Beleuchtung in zwei orthogonalen Richtungen zu konzentrieren, und es kann für diese Anwendungen ein zweiter BEF, der orthogonal zum ersten BEF orientiert ist, aufgenommen werden. Bei zwei gekreuzten BEFs liegt die Emission vom Wellenleiter innerhalb Grenzen, die einem abgeschnittenen umgekehrten Kegel ähneln. Wie es auf dem Fachgebiet üblich ist, sind die Grenzen durch die volle Halbwärtsbreite (FWHM) der optischen Intensität definiert. Beispielsweise können die Grenzen des Kegels um einen Winkel, der 35 Grad nicht übersteigt, in bezug auf eine Linie geneigt sein, die senkrecht zur oberen Fläche 56 verläuft, wobei die Beleuchtung in diesem Fall nur innerhalb Betrachtungswinkeln von 35 Grad oder weniger sichtbar ist.

Die Figuren 10 und 11 zeigen eine Draufsicht bzw. eine Schnittansicht einer weiteren Ausführungsform der Beleuchtungsvorrichtung 26, wobei ein Wellenleiter 42b verwendet wird. Wie in Figur 10 dargestellt ist, ist eine Lichtquelle 44 neben einem optischen Umlenker 50 angebracht und ist der Wellenleiter 42b in der vorstehend mit Bezug auf den in den Figuren 2 - 4C dargestellten Wellenleiter 42 beschriebenen Art mit einem reflektierenden Material 62 oder 63 bedeckt. Die obere Fläche 56 des Wellenleiters 42b weist einen vertieften Bereich oder eine Einsenkung 74 auf, die Lichtstrahlen umlenkt, welche sich im Wellenleiter 42b ausbreiten, wie nachstehend beschrieben wird. Wie am besten in Figur 22 dargestellt ist, weist die Einsenkung 74 eine Fläche 75 mit einer glatten und zusammenhängenden Krümmung bezüglich der unteren Fläche 58 auf, so daß ein Bereich verringerter Dicke des Wellenleiters 42b ausgebildet ist. Die "Dicke" des Wellenleiters 42 bezeichnet hier den Abstand zwischen der oberen Fläche 56 und der unteren Fläche 58. Gemäß der bevorzugten

Ausführungsform beträgt die Dickenänderung (beispielsweise die Tiefe der Einsenkung 74) mindestens 5 % der Dicke des Wellenleiters 42 außerhalb der Einsenkung 74.

Die Einsenkung 74 ist vorzugsweise mittig bezüglich des Außenbereichs des Wellenleiters 42 angeordnet, bedeckt eine Fläche von mindestens 70 % derjenigen der oberen Fläche 56 und definiert im Querschnitt eine elliptische Form parallel zur oberen Fläche 56. Für den in Figur 10 dargestellten rechteckigen Wellenleiter definiert die geometrische Kontur der Einsenkung 74 nach der folgenden Gleichung eine Superellipse:

$$(x/a)^n + (y/b)^p = 1$$

wobei n und p beide größer als 2 sind, a die Länge der Hauptachse der Ellipse ist und b die Länge der Nebenachse der Ellipse ist. Wie wohlbekannt ist, bewirkt das Vergrößern der Exponenten n und p über zwei, daß die Form der Ellipse weniger oval und stärker rechteckig wird. Diese Exponenten werden vorzugsweise so ausgewählt, daß die gekrümmten Ränder der Einsenkung 74 im wesentlichen zu den Rändern des Ausgangsbeleuchtungsbereichs des Wellenleiters verlaufen.

Gemäß einem vorteilhaften Merkmal des Wellenleiters 42b folgt die Fläche 75 der Einsenkung 74 einer geometrischen Kontur, die sich zwischen der oberen Fläche 56 und der unteren Fläche 58 ausbreitendes Licht so umlenkt, daß das umgelenkte Licht leichter und gleichmäßiger aus der oberen Fläche 56 des Wellenleiters 42b austritt. Insbesondere fällt einiges Licht unter einem Einfallswinkel, der bewirkt, daß es durch die obere Fläche 56 gebrochen wird, auf die gekrümmte Einsenkungsfläche 75. Licht, das einen innerhalb des kritischen Bereichs liegenden Einfallswinkel aufweist, wird innen totalreflektiert. Das reflektierte Licht wird zur unteren Fläche 58 oder zur Seitenfläche 28 gelenkt. Das reflektierende Material 62 neben diesen Flächen reflektiert das Licht zur oberen Fläche 56, so daß es durch diese hindurchtritt. Das von der unteren Fläche 58 im Bereich der Einsenkung 74 reflektierte Licht fällt typischerweise unter einem verkleiner-

ten Einfallswinkel, der ermöglicht, daß das Licht durchgelassen wird, auf die Einsenkungsfläche 7517-20. Bei anderen Ausführungsformen können mehrere Lichtquellen 44 mit einer einzigen Einsenkung oder mit mehreren Einsenkungen 74 verwendet werden.

Wie in den Figuren 12 und 13 dargestellt ist, weist eine andere Ausführungsform der Beleuchtungsvorrichtung, die als Beleuchtungsvorrichtung 170 bezeichnet wird, einen rechteckigen Wellenleiter 172 mit einer oberen Fläche 174 (Figur 13) und einer entgegengesetzten unteren Fläche 176 (Figur 13) auf. Vier Seitenflächen 178a (Figur 13), 178b (Figur 13), 178c und 178d erstrecken sich zwischen der oberen Fläche 174 und der unteren Fläche 176. Ein Lampenpaar 180a, 180b ist neben den entgegengesetzten Seitenflächen 178a und 178b angebracht. Die Lampen 180a, 180b werden vorzugsweise durch ein diffuses reflektierendes Material 182, das die Lampen 180a, 180b umgibt und einen erheblichen Teil des Wellenleiters 172 bedeckt, an ihrem Ort gehalten, wie nachstehend vollständiger beschrieben wird.

Die Lampen 180 weisen vorzugsweise Leuchtstoffröhren mit einem kreisförmigen Querschnitt auf, die sich im wesentlichen entlang der gesamten Länge der Seiten 178a, 178b erstrecken. Wie am besten in Figur 13 dargestellt ist, sind die Seiten 178a und 178b des Wellenleiters 172 vorzugsweise jeweils konkav, so daß jeweilige langgestreckte Kanäle gebildet sind, die sich entlang der gesamten Länge der Seiten 178a, 178b erstrecken. Diese Kanäle sind so konfiguriert, daß sie jeweilige Flächen auf den Seiten der Lampen 180a, 180b eng abschließend aufnehmen. Ein optisches Kopplungsgel 184 ist zwischen den Lampen 180a, 180b und den Seiten 178a, 178b des Wellenleiters 172 angeordnet, um sich wiederholende Indexdifferenzen zu verringern, indem dazwischenliegende Luftspalte beseitigt werden, und dadurch Licht von den Lampen 180a, 180b wirksam in den Wellenleiter 172 zu koppeln. Alternativ können die Lampen 180a, 180b jeweils ein lineares Feld

von Punktquellen in der Art von LEDs (nicht dargestellt) aufweisen.

Gemäß der bevorzugten Ausführungsform bedeckt das reflektierende Material 182 vollständig die untere Fläche 176 und legt sich um die Lampen 180a, 180b, um sie festzuhalten und gegenüber den Seitenflächen 178a, 178b des Wellenleiters 172 zu halten. Das reflektierende Material 182 ist auch um die Seiten 178c, 178d gelegt und erstreckt sich bis zu einem Abschnitt der oberen Fläche 174, so daß ein Randstreifen 186 (Figur 12) gebildet ist, der sich um den Umfang der oberen Fläche 174 erstreckt.

Demgemäß erzeugt die Innenfläche des reflektierenden Materials einen optischen Hohlraum, der mit dem festen Wellenleiter 172 und den Lampen 180 gefüllt ist. Der Abschnitt der oberen Fläche 174 des Wellenleiters 172, der nicht mit dem reflektierenden Material 182 bedeckt ist, bildet einen Beleuchtungsausgangsbereich oder eine Öffnung 188, wodurch Licht aus dem Wellenleiter 172 austritt. Der Randstreifen 186 ist breit genug, um die Lampen 180 so abzuschirmen, daß sie nicht direkt durch die Öffnung 188 betrachtet werden können. Gemäß der erläuterten Ausführungsform weist die Öffnung 188 eine rechteckige Form auf. Es sei bemerkt, daß die Öffnung 188 auch kreisförmig sein könnte oder eine andere von einer großen Vielzahl für verschiedene Anwendungen geeigneter Formen annehmen könnte.

Eine Winkelspektrum-Beschränkungseinrichtung 190 in der Art der vorstehend in Zusammenhang mit Figur 9 beschriebenen kann der Öffnung 188 gegenüberliegen. Gemäß einer bevorzugten Ausführungsform weist die Winkelspektrum-Beschränkungseinrichtung einen die Helligkeit erhöhenden Film (BEF) 190 auf, wie vorstehend beschrieben wurde, welcher zusammen mit einem Diffusor 192 verwendet wird, um gemeinsam eine die Lichtqualität verbessernde Vorrichtung (LQE-Vorrichtung) 196 zu bilden. Ein Farbfilter 198 kann zur LQE-Vorrichtung 196 hinzugefügt werden, falls dies erwünscht ist. Gemäß einer Ausführungsform sind die Kanten der LQE-Vorrichtung 196

zwischen der oberen Fläche 174 des Wellenleiters und dem Randstreifen 186 des reflektierenden Materials 182 angeordnet, so daß das reflektierende Material 182 die LQE-Vorrichtung 196 am Wellenleiter 172 festhält. Alternativ kann die LQE-Vorrichtung 196 über dem reflektierenden Material 182 angeordnet werden und unter Verwendung eines Klebstoffs befestigt werden.

Der Wellenleiter 172, die Lampen 180, das reflektierende Material 182 und die LQE-Vorrichtung bilden eine Beleuchtungsanordnung, die als eine Abwärtsbeleuchtung oder eine Hintergrundbeleuchtung verwendet werden kann. Das reflektierende Material 182 reflektiert Licht von den Lampen 180a, 180b zum Wellenleiter 172, so daß im wesentlichen alles Licht durch die Seiten 178a, 178b und das optische Gel 184 in den Wellenleiter 172 gekoppelt wird. Das Licht macht innerhalb des Wellenleiters 172 diffuse Reflexionen durch, bevor es durch die Öffnung 188 aus dem Wellenleiter 172 austritt. Insbesondere wird das Licht am diffusiven reflektierenden Material 182 reflektiert, das die untere Fläche 176 bedeckt, die Seitenflächen 178a - 178d umgibt und den Randstreifen 186 bedeckt.

Bei der Beleuchtungsvorrichtung 170 sind zugehörige Entwurfsfaktoren die Fläche der Beleuchtungsöffnung 188 und die kombinierte Hohlraumfläche, also die Summe aus (i) der Oberfläche des optischen Hohlraums und (ii) der Fläche der Öffnung 188. Zur ausreichend wirksamen Verwendung der von den Lampen 180a, 180b emittierten Energie beträgt das Verhältnis zwischen der Fläche der Öffnung 188 und der kombinierten Hohlraumfläche vorzugsweise mindestens 0,20, und das Verhältnis beträgt gemäß einer bevorzugten Ausführungsform mindestens 0,40.

Ein anderer interessierender Parameter ist die Abmessung der Öffnung 188 von Rand zu Rand, insbesondere die hier als Bisektorabmessung bezeichnete Abmessung. Die Bisektorabmessung ist eine Abmessung von Rand zu Rand, die sich zwischen entgegengesetzten Seiten der Öffnung 188 entlang

einer Linie, die durch die geometrische Mitte der Öffnung 188 verläuft, und im wesentlichen senkrecht zu den Öffnungsrändern an diesen entgegengesetzten Seiten (oder einer Tangenten hierzu im Fall einer kreisförmigen Öffnung) erstreckt. Gemäß einer Ausführungsform weisen alle Bisektorabmessungen von Rand zu Rand des Außenbereichs eine Länge von mindestens 4 Zoll auf. Das Verhältnis zwischen der Tiefe des Hohlraums und den Bisektorabmessungen von Rand zu Rand beeinflußt sowohl die Intensität als auch die Gleichmäßigkeit des aus der Öffnung 188 austretenden Lichts. Gemäß einer bevorzugten Ausführungsform der vorliegenden Erfindung ist das Verhältnis zwischen der Tiefe des Hohlraums und jeder der Bisektorabmessungen von Rand zu Rand erheblich kleiner als 0,1 und beträgt vorzugsweise höchstens 0,08. Gemäß einer Ausführungsform erfüllt nur die längste Bisektorabmessung diese Verhältnisse. Gemäß einer anderen Ausführungsform beträgt das Verhältnis höchstens 0,03.

Der Wellenleiter 172 besteht aus einem Material, das für das von den Lampen 180a, 180b erzeugte Licht transparent ist, beispielsweise einem transparenten Polymermaterial, und kann durch verschiedene wohlbekannte Verfahren, wie maschinelles Bearbeiten oder Spritzgießen, hergestellt werden. Bevorzugte Materialien für den Wellenleiter 172 sind Acryl, Polycarbonat und Silikon.

Wie vorstehend in Zusammenhang mit den vorhergehenden Ausführungsformen erwähnt wurde, hat das reflektierende Material 182 einen Reflexionsgrad von mindestens 90 % und kann eine einzelne Schicht oder mehrere Schichten aus einem diffus reflektierenden Band, wie dem von W.L. Gore & Associates hergestellten DRP™ Backlight Reflector, aufweisen. Alternativ können die Flächen des Wellenleiters 172 mit einer reflektierenden Farbe des vorstehend beschriebenen Typs beschichtet sein.

Das durch die Öffnung 188 der Beleuchtungsvorrichtung 170 austretende Licht kann zum Beleuchten einer Anzeige oder zum Bereitstellen einer Beleuchtung für einen Raum verwendet

werden. Gemäß einer bevorzugten Ausführungsform wird die Beleuchtungsvorrichtung 170 als eine Deckenlichteinrichtung verwendet. Bei Verwendung als eine Lichteinrichtung für einen Raum kann der Wellenleiter 172 beispielsweise etwa 16″ x 4″ messen und etwa 6 mm dick sein. Der Durchmesser der Lampen 180 stimmt vorzugsweise mit der Dicke des Wellenleiters 172 überein.

Mit Bezug auf Figur 14 sei bemerkt, daß die Beleuchtungsvorrichtung 170 ein hohles Gehäuse 200 aufweisen kann, das einen planaren oberen Abschnitt 202, Seitenabschnitte 204a - 204d und untere Abschnitte 206a und 206b aufweist, die zusammen einen Hohlraum definieren, der zur Aufnahme der Beleuchtungsanordnung bemessen ist. Der Seitenabschnitt 204a ist an einem Rand des oberen Abschnitts 202 schwenkbar angebracht, wodurch ermöglicht wird, daß er geöffnet wird, so daß die Beleuchtungsanordnung in den Hohlraum innerhalb des Gehäuses 200 geschoben werden kann. An den Seitenabschnitten 204b und 204c können Schienen angeordnet sein, um das Einführen der Beleuchtungsanordnung in das Gehäuse 200 zu erleichtern.

Wie in Figur 14 dargestellt ist, definieren die unteren Abschnitte 206a und 206d zwischen sich ein Öffnungsloch 208, das mindestens so groß ist wie die Öffnung 188. Die Beleuchtungsanordnung ist so innerhalb des Gehäuses 200 angeordnet, daß die Beleuchtungsöffnung 188 des Wellenleiters 172 dem Öffnungsloch 208 im Gehäuse 200 gegenübersteht. Den Lampen 180 kann in jeder bekannten Weise Energie zugeführt werden, beispielsweise durch einen elektrischen Ballast 210, der in dem Gehäuse 200 angeordnet ist und über elektrische Drähte an die Lampen angeschlossen ist. Wenn die Beleuchtungsvorrichtung zum Leuchten gebracht wird, tritt Licht durch die Öffnung 188 aus dem Wellenleiter 172 in den Raum aus.

Die Figuren 15 und 16 zeigen eine weitere Ausführungsform einer Beleuchtungsvorrichtung unter Verwendung eines Wellenleiters 42c. Wie am besten in Figur 15 dargestellt ist, weist die obere Fläche des Wellenleiters 42 einen innen total-

reflektierenden Bereich (TIR-Bereich) 76 mit einer glatt gekrümmten Fläche 80 (Figuren 16 und 16A) auf, der eine Wirbelform definiert, die sich in den Wellenleiter 42 erstreckt. Vorzugsweise hat der Bereich 76 die Form einer gleichwinkligen Spirale, die zu einer Spitze 82 zuläuft. Wie in den Figuren 16 und 16A dargestellt ist, hat die Fläche 80 eine gekrümmte Gestalt, die um eine vertikale Achse 83 symmetrisch ist, welche durch die Spitze 82 und senkrecht zur oberen Fläche 56 verläuft. Eine Lichtquelle 44, vorzugsweise eine LED, ist direkt unterhalb der Spitze 82 angebracht. Die LED 44 ist in einem entsprechend geformten Loch, einem entsprechend geformten Kanal oder einer entsprechend geformten Vertiefung 84 eingebettet, die sich in die untere Fläche 58 des Wellenleiters 42c erstreckt. Um eine gute Einkopplung in den Wellenleiter 42c zu gewährleisten und Reflexionen an der Grenzfläche zwischen Facetten der LED und entsprechenden Seiten der Vertiefung 84 zu verringern, kann ein transparentes optisches Kopplungsmittel in der Art eines Klebstoffs oder eines Gels (nicht dargestellt) verwendet werden, um jegliche Luftspalte zwischen der LED 44 und dem Wellenleiter 42a zu füllen. Das transparente optische Kopplungsmittel könnte ein Epoxidharz, Silikon oder ein beliebiges wohlbekanntes organisches oder anorganisches optisches Kopplungsmaterial sein. Vorzugsweise liegt der Brechungsindex des Kopplungsmittels zwischen demjenigen der LED 44 und des Wellenleiters 42.

Die Fläche 80 kann entweder eine nichtplanare gekrümmte Fläche oder eine nichtplanare Fläche, die aus mehreren ebenen Flächen besteht, die eine Kurve annähern, welche eine innere Totalreflexion (TIR) erzeugt, sein. Wie erwähnt wurde, ist die Form der Fläche 80 vorzugsweise ein symmetrischer Schnitt einer gleichwinkligen Spirale. Es können jedoch auch andere geometrische Formen verwendet werden, um eine innere Totalreflexion zu erzeugen, wobei diese symmetrische Schnitte von Hyperbeln, Parabeln, Sinuskurven und Kreisen einschließen, vorausgesetzt daß analytisch gezeigt wird, daß diese Formen

eine innere Totalreflexion erzeugen, wie nachstehend beschrieben wird. Die mathematische Modellierung dieser Formen kann mit einem optischen Analysesoftwarepaket, wie ASAP von Breault Research aus Tucson, Arizona, ausgeführt werden. Es müssen jedoch verschiedene Parameter, wie die Wellenleiterdicke und die Form der Fläche 80, optimiert werden, um die Kopplung von Licht in den Wellenleiter 42c zu optimieren.

Die geometrische Kontur der Fläche 80 wird so ausgewählt, daß der dadurch gebildete TIR-Spitzenbereich 76 im wesentlichen alle Lichtstrahlen, die direkt von der Lichtquelle 44 emittiert werden, innen totalreflektiert. Hierzu ist die Fläche 80 so konturiert, daß im wesentlichen alle von der Lichtquelle 44 emittierten Lichtstrahlen unter einem Winkel, der mindestens gleich dem kritischen Winkel ist, auf die Fläche 80 fallen. Dies kann erreicht werden, indem der Bereich möglicher Einfallswinkel von Lichtstrahlen von der Lichtquelle 44 in verschiedenen lokalen Bereichen der Fläche 86 berechnet wird. Die lokalen Bereiche sind dann so orientiert, daß alle Strahlen innerhalb des kritischen Bereichs einfallen. Die lokalen Bereiche könnten größer sein, so daß die Fläche 80 aus einer Ansammlung ebener Flächen besteht. Wenn die Größe der lokalen Bereiche abnimmt, geht die Fläche 80 in eine glatt gekrümmte Fläche mit der Form einer gleichwinkligen Spirale über, wie in den Figuren 16 und 16A dargestellt ist.

Gemäß der erläuterten Ausführungsform sind die untere Fläche 58, die Seitenflächen 60 und die Rückseite der LED mit dem diffusiven reflektierenden Material 62 bedeckt. Wenn die Lichtquelle 44 mit Energie versorgt wird, breitet sich das von der Fläche 30 innen totalreflektierte Licht innerhalb des Wellenleiters 42 außerhalb des TIR-Spitzenbereichs 76 aus. Das reflektierende Material 62 wirkt in der mit Bezug auf den Wellenleiter 42 beschriebenen Weise. Diese Ausführungsform ist besonders vorteilhaft, wenn der Wellenleiter als eine Rücklichtlinse für ein Automobil verwendet wird. Es wird daran gedacht, daß mehrere TIR-Spitzenbereiche 76 an einem

Wellenleiter 42c angeordnet werden könnten und daß die kombinierte Gesamtbeleuchtungsfläche recht groß sein kann.

Die Figuren 17 und 18 zeigen eine alternative Ausführungsform des TIR-Spitzenbereichs 76, die in einem Wellenleiter 42d verwendet wird. Wie in Figur 17 dargestellt ist, ist der TIR-Bereich 76 langgestreckt, so daß eine langgestreckte Spitze 82a gebildet ist, die entlang einer Achse 83 verläuft. Der TIR-Bereich 76 weist eine obere gleichwinklig spiralförmig gekrümmte Fläche 86 und eine untere gleichwinklig spiralförmig gekrümmte Fläche 88 auf (Figur 18), die sich symmetrisch von jeder Seite der langgestreckten Spitze 82a erstrecken. In der dargestellten Ausführungsform befindet sich ein TIR-Bereich 76 sowohl an der oberen Fläche 56 als auch an der unteren Fläche 58, wenngleich sich der TIR-Bereich auch an einer einzigen Fläche befinden könnte.

Eine Lichtquelle 86 ist direkt unterhalb der langgestreckten Spitze 82 angebracht. Die Lichtquelle 86 kann aus einer einzigen langgestreckten Lichtquelle bestehen, die entlang der gesamten Spitze 82 verläuft, und sie kann beispielsweise durch eine Leuchtstoffröhre gegeben sein. Alternativ kann die Lichtquelle 86 aus mehreren Punktlichtquellen, wie LEDs, bestehen, die eine Linie bilden, die unmittelbar unterhalb der Länge der Spitze 82 ausgerichtet ist. Der Spitzenpunkt der langgestreckten Spitze 82 kann abgerundet sein, um ein kontrolliertes Lecken von Licht aus der Lichtquelle 86 im Bereich des Wellenleiters 42d unmittelbar oberhalb der Lichtquelle 86 bereitzustellen. Hierdurch werden dunkle Flecken oberhalb der Lichtquelle 86 beseitigt.

Der in den Figuren 17 und 18 dargestellte Wellenleiter 42d funktioniert im wesentlichen ebenso wie der in den Figuren 12 - 13 dargestellte Wellenleiter. Das heißt, daß der TIR-Bereich 76 im wesentlichen das gesamte von der Lichtquelle 86 emittierte Licht innen totalreflektiert. Das symmetrische Paar gekrümmter Flächen 86, 88, die an der langgestreckten Spitze 82a miteinander verbunden sind, bietet eine innere Totalreflexion (TIR) des Lichts von der Lichtquelle 44

entlang beiden Seiten der Achse 83. Die Spitze 82a teilt das Licht von der Lichtquelle 44 in zwei gleiche Abschnitte.

Weil die TIR-Spitzenbereiche 76 aus den Figuren 15 - 18 im wesentlichen das gesamte darauf fallende Licht reflektieren, erscheinen diese Bereiche 76 in bezug auf die Abschnitte des Wellenleiters außerhalb der TIR-Bereiche 76 verhältnismäßig dunkel. In Situationen, in denen solche dunklen Flecke abzulehnen sind, sollte die Fläche 80 so konturiert sein, daß sie kein vollkommener interner Reflektor ist, so daß ein erheblicher Teil des einfallenden Lichts durch die Fläche 80 leckt. Der Betrag des Leckens sollte vorzugsweise nicht größer sein als erforderlich ist, um die dunklen Flecke im wesentlichen zu beseitigen und in den TIR-Bereichen eine Intensität bereitzustellen, die im wesentlichen derjenigen des umgebenden Bereichs gleicht. Diese verlustbehafteten TIR-Bereiche stellen demgemäß eine gleichmäßige Ausgangsbeleuchtung über den gesamten Ausgangsbereich des Wellenleiters bereit.

LEDs haben viele wünschenswerte Eigenschaften für optische Anzeigesysteme, wie niedrige Kosten und eine niedrige Ansteuerspannung. LEDs sind in der Lage, verschiedene Farben, wie rot, grün und blau, zu erzeugen. Die Ansteuerspannung einer LED kann von 1,8 Volt bis 4,0 Volt variieren, und die differentiellen Energieniveaus der quantenmechanischen Bandlücke erzeugt diese spektralen Farben. Fachleute werden jedoch verstehen, daß auch andere Punktquellen verwendet werden können. Es könnten Laserdioden (Lds) oder superlumineszente Leuchtdioden sowie jede beliebige lichtemittierende Halbleitervorrichtung verwendet werden.

Figur 19 zeigt eine herkömmliche LED 110 in einem "Kugellinsengehäuse". Die LED 110 weist ein Gehäuse 111 auf, das zwei elektrische Leitungen 112 einschließt, die an eine Anode 113 und eine Kathode 114 angeschlossen sind. Eine Schicht 115 aus einer Gruppe-III-V-Halbleiterverbindung, wie AlGaAs, GaAsP oder AlInGaP, ist zwischen der Anode 113 und der Kathode 114 angeordnet. Ein schalenförmiger Reflektor 116 ist

hinter der Halbleiterschicht 115 angeordnet. Der obere Abschnitt des Gehäuses 111 bildet eine halbkugelförmige Immersionslinse 117 aus Acryl oder Epoxidharz.

Wenn eine Spannung im Bereich von 1,8 - 4,0 V zwischen die Anode 113 und die Kathode 114 gelegt wird, erzeugt die LED nach dem lichtelektrischen Effekt sichtbare Lichtenergie. Der Reflektor 116 reflektiert das Licht aufwärts, so daß das Licht nicht durch die Seiten des Gehäuses 111 hindurchtritt. Die Linse 117 fokussiert das von der Halbleiterschicht 115 emittierte Licht. Das Halbleitermaterial hat einen Brechungsindex von etwa 3,4, und der Brechungsindex der Kunststoffkapselung des Gehäuses 6 beträgt 1,5.

Figur 20 zeigt eine herkömmliche "bloße" Leuchtdiode 110a. Die LED 110a weist eine Halbleiterschicht 115a auf, die auf einer flachen Basis 117 positioniert ist. Eine dielektrische Kuppel 118 bedeckt die Halbleiterschicht 115. Ein Reflektor 116a ist zwischen der Basis 117 und der Halbleiterschicht 115 angeordnet.

Figur 21 zeigt ein Ausgangszeichen 130, das gemäß einer anderen Ausführungsform der Erfindung beleuchtet wird. Das Ausgangszeichen 130 besteht aus einer planaren wellenleitenden Schicht oder einem planaren Wellenleiter 132 mit einer Fläche 134, auf der sich ein Beleuchtungskopplungselement 136 zentral befindet. Das Beleuchtungskopplungselement 136 erzeugt und koppelt eine Beleuchtung von LEDs 140 in den Wellenleiter 132. Mehrere Anzeigeelemente 142 befinden sich auch an der Fläche 134, um das Licht von dem Wellenleiter 132 zu einem externen Betrachter 144 zu übermitteln.

Wie in Figur 21 dargestellt ist, haben die Anzeigeelemente 142 Formen, welche die Buchstaben "E", "X", "I" und "T" bilden, wenngleich die Anzeigeelemente eine beliebige Vielzahl von Symbolen und Formen zur Beleuchtung bilden können. Zur Beleuchtung eines Rücklichts (Figur 22) könnten die Anzeigeelemente 142 beispielsweise in Form länglicher Strukturen in der Art horizontaler oder vertikaler Linien oder Kanäle in der Rücklichtoberfläche ausgebildet sein.

Gemäß einer alternativen Ausführungsform zum Beleuchten einer Armbanduhren- oder Uhrenfläche (Figur 23) könnten die Anzeigeelemente 142 in Form von Zahlen oder Punkten auf dem Zifferblatt ausgebildet sein. Für eine Uhr, bei der Anzeigeelemente 142 verwendet werden, könnte sich eine einzige LED im Innenbereich eines kreisförmigen Wellenleiters auf der Uhrenfläche befinden. Alternativ könnten sich vier LEDs im Inneren der Uhrenfläche befinden, wobei jede LED einen Quadranten der Uhrenfläche beleuchtet, wie in Figur 23 dargestellt ist. Zusätzlich könnten die LEDs in einem kreisförmigen Feld mit einem gleichwinkligen Abstand angeordnet sein.

Figur 24 zeigt eine Schnittansicht des Wellenleiters 132. Wie dargestellt, sind die Anzeigeelemente 142 konkave Strukturen, die sich in die Fläche 134 erstrecken. Die Anzeigeelemente 142 könnten auch konvexe Strukturen sein. Die Oberflächen der Anzeigeelemente 142 könnten entweder glatte Oberflächen oder rauhe Oberflächen, um die optische Streuung zu erhöhen, sein.

Wie in Figur 24 dargestellt ist, weist das Beleuchtungskopplungselement 136 eine oder mehrere LEDs 140 auf, die in eine untere Fläche 146 des Wellenleiters 132 eingebettet sind. Die LEDs 140 sind vorzugsweise so orientiert, daß ihre Längsachsen senkrecht zur unteren Fläche 146 des Wellenleiters 132 verlaufen. Die LEDs 140 können in jede der beiden Flächen 142 und 146 des Wellenleiters 132 eingebettet sein, sie sind jedoch vorzugsweise in die Fläche eingebettet, die den Anzeigeelementen 142 entgegengesetzt ist. Die LEDs 140 könnten entweder aus "Kugellinsen"-LEDs oder "bloßen" LEDs bestehen.

Wie in Figur 24 dargestellt ist, hat das Beleuchtungskopplungselement 136 einen TIR-Bereich 150 mit gekrümmten Flächen 152, 154 ähnlich den vorstehend mit Bezug auf die Figuren 14 und 15 beschriebenen Flächen 86 und 88. Die Flächen 86 und 88 sind zur LED 140 hin gekrümmt, so daß Licht von der LED 140 auf sie fällt. Die Flächen 86 und 88 sind

TIR-Flächen in bezug auf dieses einfallende Licht. Wie dargestellt ist, bilden die Flächen 86, 88 eine Spitze, die auf die LED 140 gerichtet ist, wobei die LED 140 ein Ende aufweist, das in Ausrichtung mit der Spitze abschließt, um im wesentlichen alles Licht von der LED direkt zur Spitze und in die Nähe von dieser zu lenken. Der TIR-Bereich funktioniert im wesentlichen in gleicher Weise wie vorstehend beschrieben wurde, und er wird daher nicht weiter beschrieben.

Das Beleuchtungskopplungselement 136 weist wünschenswerterweise ein Linsenelement 90 auf, das integriert mit der Fläche des Wellenleiters ausgebildet ist, die an die LED 140 angrenzt. Die Brechkraft des Linsenelements 90 wird durch eine Brechungsindexdifferenz zwischen einem die LED 140 umgebenden Luftspalt, der LED 140, dem transparenten optischen Kopplungsmittel und dem Wellenleiter 132 hervorgerufen. Gemäß dieser Ausführungsform des Wellenleiters 132 weisen das transparente optische Kopplungsmittel und das Material der LED 140 vorzugsweise alle einen Brechungsindex von etwa 1,5 auf. Der Luftspalt um die LED 140 definiert ein Volumen mit einem Brechungsindex von etwa 1,0, wodurch eine Lichtbrechung hervorgerufen wird.

Das Linsenelement 90 kann wahlweise entweder konvex oder konkav sein. Ein konvexes Linsenelement 90 konvergiert Licht von der LED 140, um die Winkelausdehnung der Lichtstrahlung von der LED 140 zu verringern. Gemäß einer Ausführungsform reicht die Fokussierungsleistung des konvexen Linsenelements 90 aus, um die Lichtstrahlen zu kollimieren. Ein konkaves Linsenelement 90 divergiert von der LED 140 ausgehende Lichtstrahlen, wodurch der Winkel der Lichtstrahlen an den Flächen 152 und 154 vergrößert wird. Hierdurch wird die Wahrscheinlichkeit vergrößert, daß Lichtstrahlen die Flächen 152 und 154 unter einem Einfallswinkel schneiden, der größer ist als der kritische Winkel.

Figur 25 zeigt eine andere Ausführungsform eines Ausgangszeichens 130, die im wesentlichen einen Wellenleiter 132a umfaßt. Gemäß dieser Ausführungsform sind LEDs 140

so positioniert, daß sie innerhalb eines kreisförmigen Kopplungselements 148, das sich in einem inneren Lichtinjektionsbereich des Wellenleiters 132a befindet, nach außen weisen. Die Längsachsen der LEDs 140 sind wünschenswerterweise parallel zur Ebene der Fläche 134 orientiert. Wenngleich Figur 25 vier LEDs 140 zeigt, die im Kopplungselement 148 durch 90°-Winkel getrennt sind, sei bemerkt, daß jede beliebige Anzahl von LEDs 140 um den Umfang des Kopplungselements 148 angeordnet sein kann. Die LEDs 140 können auch in anderen Formen als Kreise angeordnet werden, wobei die Längsachsen vorzugsweise parallel zum Wellenleiter 132a ausgerichtet sind, beispielsweise in ovalen, rechteckigen, quadratischen und linearen Formen.

Das Kopplungselement 148 kann entweder integriert mit dem Wellenleiter 132a ausgebildet sein, oder es kann modular in ein entsprechendes Loch oder eine entsprechende Vertiefung im Wellenleiter 132a eingefügt sein, so daß Licht durch die Seiten des Lochs und senkrecht dazu eingeleitet wird. Bei einer modularen Konfiguration werden die LEDs 140 vorzugsweise zuerst an dem Kopplungselement 148 angebracht, und das Kopplungselement 148 wird dann in das Loch oder die Vertiefung im Wellenleiter eingeführt. Eine modulare Einführungstechnik bietet Vorteile bei der Herstellung, indem das gleichzeitige Manipulieren mehrerer Leuchtdioden (LEDs) erleichtert wird. Falls das Kopplungselement 148 im Wellenleiter 132a integriert ausgebildet ist, werden die LEDs 140 direkt in das Loch oder die Vertiefung im Wellenleiter eingefügt. Bei einer möglichen Anwendung können "bloße" LEDs direkt auf der Oberfläche des Wellenleiters aufwachsen gelassen werden.

Gemäß einer anderen in Figur 26 dargestellten Ausführungsform werden extraktive Anzeigeelemente 300 in Kombination mit einem einen Wellenleiter 132c aufweisenden Zeichen 130 verwendet. Ein Beleuchtungskopplungselement 136 wird zum Einleiten von Licht in den Wellenleiter 132 in der vorstehend beschriebenen Weise verwendet. Mehrere extraktive Anzeige-

elemente 300 und wellenleitende Zylinder 302 sind, wie nachstehend beschrieben wird, zu der Oberfläche des Wellenleiters 132c strukturiert. Die extraktiven Anzeigeelemente 300 erscheinen als eine Reihe spitzer Höcker, die in Form symbolischer oder nichtsymbolischer Figuren angeordnet sind. Bei Beleuchtung durch den Wellenleiter 132c und die wellenleitenden Zylinder 302 und in Kombination mit Beleuchtungskopplern, wie einem vorstehend beschriebenen TIR-Bereich, erzeugen die extraktiven Anzeigeelemente 300 ein besonders helles, punktartiges (oder linienartiges) Lichtmuster an den Scheitelpunkten (oder Scheiteln) des festen Polygons.

Figur 27 zeigt eine Seitenansicht eines am Ende eines wellenleitenden Zylinders 302 ausgebildeten extraktiven Anzeigeelements 300. Die Basis des extraktiven Anzeigeelements 300 ist mit dem Ende des wellenleitenden Zylinders 302 integriert ausgebildet. Vorzugsweise hat jeder der wellenleitenden Zylinder 302 einen Durchmesser in der Größenordnung von einem Zehntel Zoll (0,1"), wenngleich der Durchmesser eines Zylinders lediglich in der Größenordnung eines Tausendstel Zolls (0,001") liegen kann.

Gemäß der in Figur 27 dargestellten Ausführungsform weist das extraktive Anzeigeelement 300 die Form eines polygonalen Festkörpers mit drei gleichseitigen Flächen 304, 306, 308 und einem Scheitelpunkt mit 120-Grad-Scheiteln auf. Die Anzahl der Flächen an dem extraktiven Anzeigeelement 300 ist nicht auf drei beschränkt, und sie kann jede beliebige Anzahl von zwei oder größer sein. Ein zweiseitiges extraktives Anzeigeelement 300 weist eine Keilform am Ende des Zylinders auf, die in hohem Maße wie die Spitze eines Schraubenziehers erscheint. Eine größere Anzahl von Flächen am extraktiven Anzeigeelement 300 könnte rechteckige, hexagonale, oktagonale und kreisförmige Formen einschließen. Im Fall eines kreisförmigen extraktiven Anzeigeelements 300 läuft der Zylinder vorzugsweise zu einer konischen Spitze zu. Es kann auch an eine andere große Vielzahl von Formen, wie Kreuze oder Sterne, gedacht werden.

Die Form des extraktiven Anzeigeelements 300 erzeugt eine besonders helle, punktartige (oder linienartige) Lichtausgabe am Scheitelpunkt (oder Scheitel) 310. Licht wird durch innere Totalreflexion innerhalb des wellenleitenden Zylinders 302 übertragen, bis es durch den seitlichen Abschnitt 312 in den Wellenleiterzylinder 302 und das extraktive Anzeigeelement 300 eintritt. Licht innerhalb des extraktiven Anzeigeelements 300 wird durch innere Totalreflexion innerhalb der gleichseitigen Flächen 304, 306, 308 eingeschlossen, bis es in die Nähe des Scheitelpunkts 310 gelangt. Das Licht wird dann als eine helle, punktartige (oder linienartige) Ausgabe durch den Scheitelpunkt (oder Scheitel) 310 wirksam aus dem Anzeigeelement 300 ausgekoppelt.

Wie in Figur 29 dargestellt ist, kann die Länge des wellenleitenden Zylinders 302 so verringert werden, daß das Anzeigeelement 142 nur aus dem extraktiven Anzeigeelement 300 besteht, das direkt auf der Oberfläche 134 ausgebildet ist. Die extraktiven Anzeigeelemente 300 sind in der anhängigen Patentanmeldung mit der laufenden Nummer 08/683757 mit dem Titel "Light Extractor Apparatus", die auf den gleichen Erwerber übertragen wurde, näher dargelegt. Es wurde herausgefunden, daß diese Extraktionselemente mehr als 90 % der einfallenden Strahlung bei einer Rückstreuung von weniger als 10 % wirksam extrahieren.

Die Basis jedes wellenleitenden Zylinders 302 ist vorzugsweise integriert mit der Oberfläche des Wellenleiters 301 ausgebildet, um die Herstellung zu erleichtern. Die extraktiven Anzeigeelemente 300 und die wellenleitenden Zylinder 302 können durch herkömmliche Verfahren zum Formen von Kunststoffartikeln, wie Spritzgießen oder Kompressionsformen, gebildet werden.

Der Kontrast des Zeichens 130 bei Verwendung extraktiver Anzeigeelemente 300 kann durch Ändern der Eigenschaften der Anzeigeelemente 300 über die Oberfläche des Zeichens 130 ausgeglichen werden. Beispielsweise können die Durchmesser der Zylinder 302, die näher an der Beleuchtungskopplungs-

einrichtung liegen, kleiner gemacht werden als die Durchmesser der Zylinder 302, die weiter von der Beleuchtungskopplungseinrichtung entfernt sind, um die größere Lichtintensität zu kompensieren, die typischerweise in den zentralen Bereichen des Zeichens vorhanden ist. Durch Verkleinern des Durchmessers des Zylinders 302 wird die Lichtmenge verkleinert, die auf den Scheitelpunkt (oder den Scheitel) des extraktiven Anzeigeelements 300 übertragen wird.

Figur 29 zeigt ein Ausgangszeichen 130 mit einem Wellenleiter 132d. Eine Beleuchtungskopplungseinrichtung 318 ist zum Einleiten von Licht in den Wellenleiter 132d im Inneren von diesem angeordnet. Die Beleuchtungskopplungseinrichtung weist mehrere LEDs 140 auf. Der Wellenleiter 132d weist eine Reihe konzentrischer Rillen 320 auf, die sich an einer hinteren Fläche des Wellenleiters 132 befinden. Die konzentrischen kreisförmigen Rillen 320 strahlen vorzugsweise vom zentralen Bereich des Wellenleiters 132d nach außen. Die kreisförmigen Rillen 320 sind nur in den Bereichen angeordnet, in denen die symbolischen oder nichtsymbolischen Bestandteile des Zeichens anzuzeigen und zu beleuchten sind, so daß die kreisförmigen Rillen 320 die Form der Zeichenbestandteile bilden. Vorzugsweise wird die Anzeige bei Verwendung konzentrischer kreisförmiger Rillen 320 weiter optimiert, indem eine Anpassung an die Symmetrie der Lichtquelle vorgenommen wird oder andere wünschenswerte Anzeigeeigenschaften erhalten werden.

Wie in Figur 30 dargestellt ist, sind die konzentrischen kreisförmigen Rillen 320 V-förmige Strukturen, die das Reflektieren von Licht durch die entgegengesetzte Seite des Wellenleiters 132d bewirken. Die Rillen 320 definieren einen Winkel zwischen den Flächen des "V", wenngleich die Rillen auch andere Formen als die eines "V" annehmen können. Die kreisförmigen Rillen 320 unterscheiden sich sowohl in der Größe als auch im Ort von den Anzeigeelementen 142. Die Tiefe der kreisförmigen Rillen 320 kann lediglich in der Größenordnung von einem Zehntel Prozent (0,1 %) bis einem Prozent (1 %) der Dicke des Wellenleiters 132d liegen.

Die Rillen 320 können durch beliebige einer Vielzahl von Verfahren, einschließlich maschinelles Bearbeiten (mechanisch, Laser oder EDM), Abtragen, Ätzen, Stanzen oder Prägen, gebildet werden. Sie können auch zunächst über der ganzen Oberfläche des Wellenleiters gebildet werden und dann mit einem Indexanpassungsmaterial in allen Bereichen mit Ausnahme von denen, die den Zeichen der Anzeige entsprechen, aufgefüllt werden. Ein abziehbarer Film oder eine abziehbare Beschichtung kann aufgebracht werden, um die Zeichen zu bilden oder nachfolgend alle Bereiche mit Ausnahme der ausgewählten zu entfernen. Es ist auch möglich, die Anzeigeeigenschaften zu optimieren, indem die Eigenschaften der Rillen 320 an verschiedenen Punkten auf der Anzeige geändert werden. Die Raumfrequenz, die Breite oder die Tiefe der Rillen 320 kann in Bereichen zunehmen, die weiter von der Beleuchtungskopplungseinrichtung 318 entfernt sind, um wünschenswerte Anzeigeeigenschaften zu erhalten.

Wenngleich die vorstehende Beschreibung der bevorzugten Ausführungsformen bestimmte neuartige Merkmale der Erfindung dargestellt, beschrieben und ausgeführt hat, wird verständlich sein, daß verschiedene Auslassungen, Ersetzungen und Änderungen in der Form der Einzelheiten der erläuterten Vorrichtung sowie ihrer Verwendungen von Fachleuten vorgenommen werden können, ohne von der vorliegenden Erfindung abzuweichen. Folglich soll der Schutzumfang der vorliegenden Erfindung nicht durch die vorstehende Erörterung beschränkt sein, die der Erläuterung dienen und den Schutzumfang der Erfindung nicht einschränken soll.

EP-B-0 944 800
(97 95 0921.3)
TELEDYNE LIGHTING AND DISPLAY PRODUCTS, INC.
u.Z.: D 1976 EP

Patentansprüche

1. Beleuchtungsvorrichtung mit einem Wellenleiter (42, 132), der außerhalb eines Innenbereichs von diesem im wesentlichen parallele obere und untere Flächen aufweist, wobei der Wellenleiter (42, 132) dadurch gekennzeichnet ist, daß:

ein Beleuchtungskoppler (76, 150) in dem Innenbereich des Wellenleiters (42, 132) bereitgestellt ist, wobei der Innenbereich eingerichtet ist, um eine Lichtquelle (44, 140) an einem Ort anzubringen, und daß der Beleuchtungskoppler (76, 150) eine Brechungsindex-Grenzfläche (80, 86, 88, 152, 154) aufweist, die konfiguriert ist, um Lichtstrahlen einzufangen, die sich von dem Ort entlang einer Linie ausbreiten, die in bezug auf die obere und/oder untere Fläche einen kleineren Winkel als den kritischen Winkel der inneren Totalreflexion bildet, so daß die eingefangenen Lichtstrahlen innen totalreflektiert werden und zwischen den oberen und unteren Flächen zur Ausbreitung außerhalb des Innenbereichs injiziert werden.

2. Vorrichtung nach Anspruch 1, weiter dadurch gekennzeichnet, daß der Beleuchtungskoppler (76, 150) eine Fläche mit innerer Totalreflexion (TIR) aufweist, die zur inneren Totalreflexion von darauf einfallendem Licht konfiguriert ist.

3. Vorrichtung nach Anspruch 2, weiter gekennzeichnet durch eine Punktquelle (44, 140) von Licht, die zumindest teilweise innerhalb eines Hohlraums (84) in dem Wellenleiter

(42, 132) angeordnet ist, wobei der Hohlraum (84) benachbart zu der Fläche mit innerer Totalreflexion liegt.

4. Vorrichtung nach Anspruch 3, weiter gekennzeichnet durch ein diffusives reflektierendes Material (62) auf einer von den oberen und unteren Flächen (56, 58, 134, 148).

5. Vorrichtung nach Anspruch 1, weiter dadurch gekennzeichnet, daß der Wellenleiter (42, 132) und der Beleuchtungskoppler (76, 150) integriert aus einem einzigen Materialstück (42, 132) ausgebildet sind.

6. Vorrichtung nach Anspruch 3, weiter dadurch gekennzeichnet, daß die Punktquelle (44, 140) eine LED (44, 140) aufweist und daß eine der oberen und unteren Flächen (56, 58, 134, 146) von der TIR-Fläche (80, 86, 88, 152, 154) zur LED (44, 140) hin gekrümmt ist, wobei die TIR-Fläche (80, 86, 88, 152, 154) eine Spitze (82, 82a) definiert, die zur LED (44, 140) hin gerichtet ist, wobei die LED (44, 140) mit der Spitze (82, 82a) ausgerichtet ist, um im wesentlichen alles Licht von der LED (44, 140) direkt zur Spitze (82, 82a) hin und neben diese zu richten.

7. Vorrichtung nach Anspruch 6, weiter dadurch gekennzeichnet, daß die LED (44, 140) eine lichtemittierende Fläche aufweist, die sich innerhalb einer durch die oberen und unteren Flächen (56, 58, 134, 146) des Wellenleiters (42, 132) definierten Begrenzung (56, 58, 134, 146) befindet.

8. Vorrichtung nach Anspruch 7, weiter dadurch gekennzeichnet, daß die Oberfläche der LED (44, 140) mit einem optischen Kopplungsmittel optisch mit dem Wellenleiter (42, 132) gekoppelt ist.

9. Vorrichtung nach Anspruch 2 bis 8, weiter gekennzeichnet durch Anzeigeelemente (142), die außerhalb des

Innenbereichs (76, 150) an dem Wellenleiter (42, 132) ausgebildet sind, um zu bewirken, daß Licht von dem Wellenleiter (42, 132) emittiert wird.

10. Vorrichtung nach Anspruch 9, weiter dadurch gekennzeichnet, daß die Anzeigeelemente (142) als konkave Kanäle (142) innerhalb der Oberfläche (56, 58, 134, 146) des Wellenleiters (42, 132) ausgebildet sind und daß die Außenflächen der Kanäle (142) entweder glatt oder rauh sind, um eine diffuse Ausgangsstrahlung zu fördern.

11. Vorrichtung nach Anspruch 10, weiter dadurch gekennzeichnet, daß die konkaven Kanäle (142) der Anzeigeelemente (142) über die Wellenleiterschicht (42, 132) Tiefen aufweisen, welche Beleuchtungsdifferenzen kompensieren.

12. Vorrichtung nach Anspruch 9, weiter dadurch gekennzeichnet, daß die Anzeigeelemente (142) konzentrische kreisförmige Rillen (320) in einer Fläche (56, 58, 134, 146) des Wellenleiters (42, 132) sind.

13. Vorrichtung nach Anspruch 9, weiter dadurch gekennzeichnet, daß:

jedes der Anzeigeelemente (142) als ein extraktives Anzeigeelement (300) auf einem wellenleitenden Zylinder (302) ausgebildet ist,

jedes der extraktiven Anzeigeelemente (300) als ein massives Polygon mit einem Scheitelpunkt (310) oder einem Scheitel auf einer zum Wellenleiter (42, 132) senkrechten Linie ausgebildet ist und Licht von dem Wellenleiter (42, 132) durch innere Totalreflexion sowohl innerhalb des wellenleitenden Zylinders (302) als auch durch die Außenflächen (304, 306, 308) des extraktiven Anzeigeelements (300) übertragen wird, um an dem Scheitelpunkt (310) oder dem Scheitel des extraktiven Anzeigeelements (300) emittiert zu werden.

14. Vorrichtung nach Anspruch 9, weiter dadurch gekennzeichnet, daß:

jedes der Anzeigeelemente (142) als ein extraktives Anzeigeelement (300) auf dem Wellenleiter (42, 132) ausgebildet ist, wobei jedes der extraktiven Anzeigeelemente (300) als ein massives Polygon mit einem Scheitelpunkt (310) oder einem Scheitel ausgebildet ist und Licht von dem Wellenleiter (42, 132) durch innere Totalreflexion durch die Seitenflächen des extraktiven Anzeigeelements (300) übertragen wird, um an dem Scheitelpunkt (310) oder dem Scheitel des extraktiven Anzeigeelements (300) emittiert zu werden.

15. Vorrichtung nach Anspruch 9 oder 14, weiter dadurch gekennzeichnet, daß:

die Anzeigeelemente (142) entweder in symbolischen alphanumerischen Mustern oder nichtsymbolischen Mustern angeordnet sind.

16. Vorrichtung nach den Ansprüchen 1, 2, 3, 4 und 5, weiter dadurch gekennzeichnet, daß eine der oberen und unteren Flächen (56, 58, 134, 146) zu der Lichtquelle (44, 140) hin gekrümmt ist, um die Brechungsindex-Grenzfläche (80, 86, 88, 152, 154) der gekrümmten Fläche (80, 86, 88, 152, 154) zu bilden, welche eine Spitze (82, 82a) definiert, welche zur Lichtquelle (44, 140) hin gerichtet ist, wobei die Lichtquelle (44, 140) neben der Spitze (82, 82a) ausgerichtet ist, so daß im wesentlichen alles Licht von der Lichtquelle (44, 140) zur Spitze (82, 82a) hin und neben diese gerichtet wird.

17. Vorrichtung nach den Ansprüchen 6, 7, 8 und 16, weiter dadurch gekennzeichnet, daß die gekrümmte Fläche (80, 152, 154) um eine Achse (83) durch die Spitze (82) senkrecht zur oberen Fläche (56, 134) kreissymmetrisch ist.

18. Vorrichtung nach den Ansprüchen 6, 7, 8 und 16, weiter dadurch gekennzeichnet, daß die gekrümmte Fläche (86, 88) eine langgestreckte Spitze (82a) definiert.

19. Vorrichtung nach den Ansprüchen 6, 7, 8, 16, 17 und 18, weiter dadurch gekennzeichnet, daß die gekrümmte Fläche (80, 86, 88, 152, 154) mehrere ebene Flächen aufweist, die eine glatte Kurve annähern.

20. Vorrichtung nach den Ansprüchen 2, 3, 4, 6, 7 und 8, weiter dadurch gekennzeichnet, daß die innen total-reflektierende Fläche (80, 86, 88, 152, 154) so konfiguriert ist, daß ein Teil des Lichts durch die innen total-reflektierende Fläche (80, 86, 88, 152, 154) leckt, um eine Intensität bereitzustellen, die auf mindestens einen von den oberen und unteren Bereichen (56, 58, 134, 146) im wesentlichen gleich fällt.

21. Verfahren zum Koppeln von Beleuchtung in einen Wellenleiter (42, 132) mit außerhalb eines Innenbereichs von diesem im wesentlichen parallelen oberen und unteren Flächen, gekennzeichnet durch die Schritte:

Beleuchten eines Beleuchtungskopplers im Innenbereich des Wellenleiters durch Zuführen von Energie zu einer Lichtquelle, die im Innenbereich angeordnet ist, wobei beim Beleuchten eine Brechungsindex-Grenzfläche (80, 86, 88, 152, 154) in dem Innenbereich aus der Lichtquelle austretenden Lichtstrahlen ausgesetzt wird, und

inneres Totalreflektieren der auf die Brechungsindex-Grenzfläche (80, 86, 88, 152, 154) einfallenden Lichtstrahlen, so daß reflektierte Lichtstrahlen zwischen den oberen und unteren Flächen zur Ausbreitung außerhalb des Innenbereichs des Wellenleiters (42, 132) injiziert werden.

22. Verfahren nach Anspruch 21, wobei sich die Lichtstrahlen außerhalb des Innenbereichs des Wellenleiters (42,

132) durch innere Totalreflexion der Lichtstrahlen an einer durch eine gekrümmte Fläche definierten Spitze (82, 82a) ausbreiten.

23. Verfahren nach Anspruch 22, wobei im wesentlichen alle Lichtstrahlen zu der Spitze (82, 82a) hin und neben diese gelenkt werden.

24. Verfahren nach einem der Ansprüche 21 bis 23, wobei ein Teil der Lichtstrahlen durch die Brechungsindex-Grenzfläche (80, 86, 88, 152, 154) geführt wird.

25. Beleuchtungsvorrichtung nach Anspruch 1, weiter dadurch gekennzeichnet, daß die Brechungsindex-Grenzfläche (80, 86, 88, 152, 154) eine gekrümmte Form aufweist, die um eine Achse symmetrisch ist und zu dem Ort hin konvergiert.

26. Beleuchtungsvorrichtung nach Anspruch 25, weiter dadurch gekennzeichnet, daß die Brechungsindex-Grenzfläche (80, 86, 88, 152, 154) um die Achse kreissymmetrisch ist.

27. Beleuchtungsvorrichtung nach Anspruch 26, weiter dadurch gekennzeichnet, daß die gekrümmte Form mit der Form eines Wirbels übereinstimmt.

28. Beleuchtungsvorrichtung nach Anspruch 26, weiter dadurch gekennzeichnet, daß die Brechungsindex-Grenzfläche (80, 86, 88, 152, 154) eine Form einer gleichwinkligen Spirale aufweist.

29. Beleuchtungsvorrichtung nach Anspruch 25, weiter dadurch gekennzeichnet, daß die Brechungsindex-Grenzfläche (80, 86, 88, 152, 154) um den Ort zentriert ist.

30. Beleuchtungsvorrichtung nach Anspruch 1, weiter dadurch gekennzeichnet, daß die Brechungsindex-Grenzfläche (80,

86, 88, 152, 154) verlustbehaftet ist, so daß ein Teil des von der Lichtquelle (44, 140) an dem Ort emittierten Lichts durch die Brechungsindex-Grenzfläche (80, 86, 88, 152, 154) hindurchtritt.

31. Beleuchtungsvorrichtung nach Anspruch 1, weiter dadurch gekennzeichnet, daß die Brechungsindex-Grenzfläche (80, 86, 88, 152, 154) zur Bildung einer Spitze über dem Ort konvergiert.

32. Beleuchtungsvorrichtung nach Anspruch 31, weiter dadurch gekennzeichnet, daß die Spitze konturiert ist, um ein Lecken von Licht durch die Brechungsindex-Grenzfläche (80, 86, 88, 152, 154) zu ermöglichen.

33. Beleuchtungsvorrichtung nach Anspruch 32, weiter dadurch gekennzeichnet, daß die Spitze abgerundet ist, um ein Lecken von Licht durch die Brechungsindex-Grenzfläche (80, 86, 88, 152, 154) zu ermöglichen.

EP-B-0 944 800
(97 95 0921.3)
TELEDYNE LIGHTING AND DISPLAY PRODUCTS, INC.
u.Z.: D 1976 EP

Figur 1

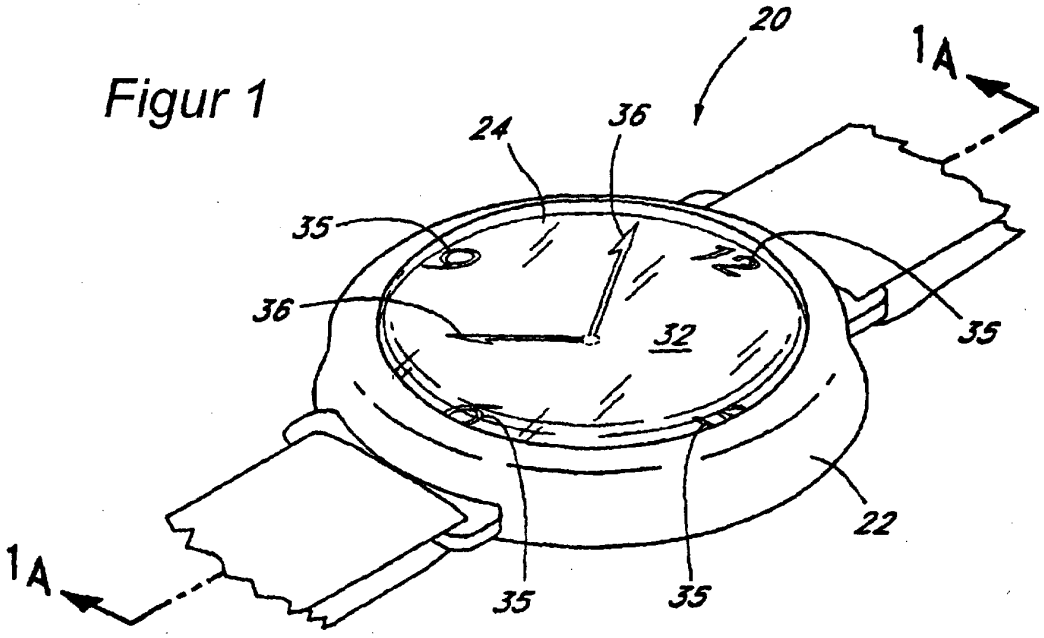

Figur 1A

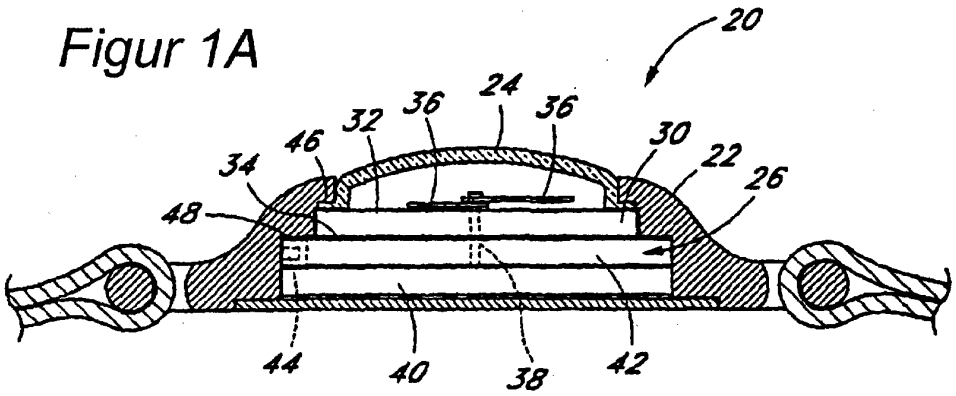

Figur 2

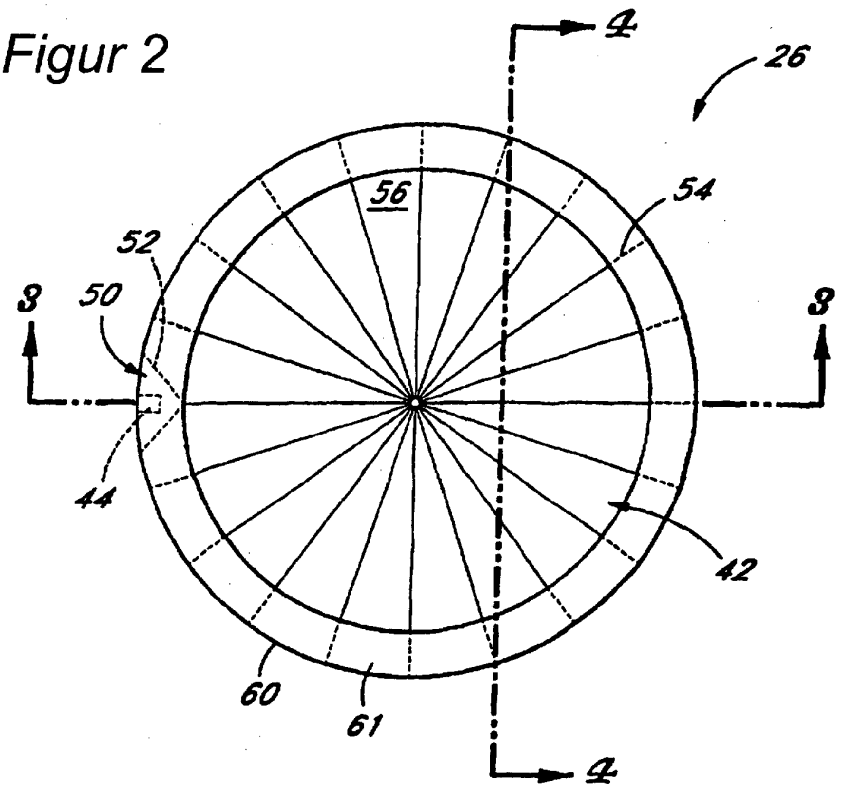

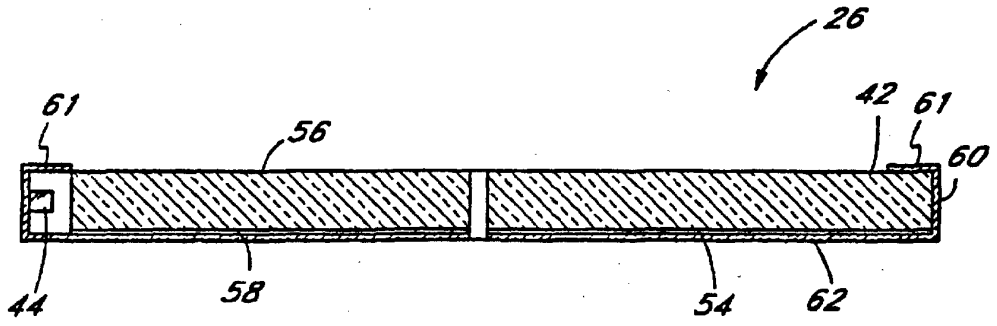

Figur 3

Figur 4

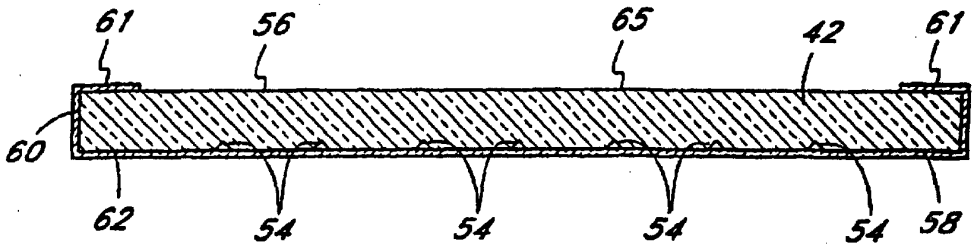

Figur 4A

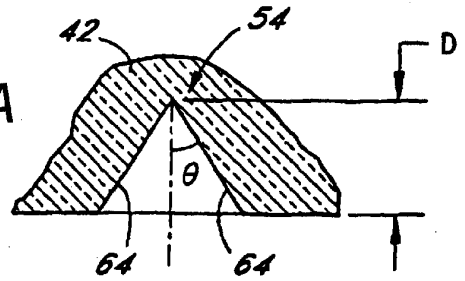

Figur 4B

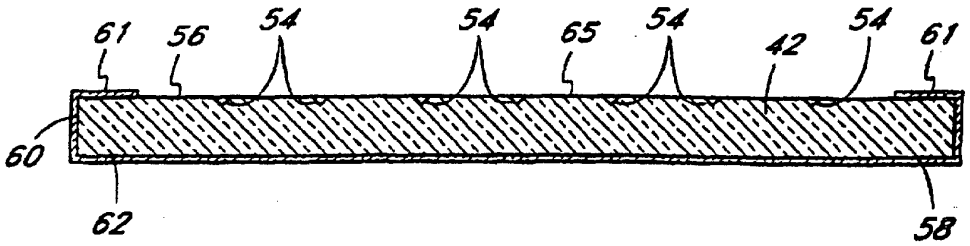

Figur 4C

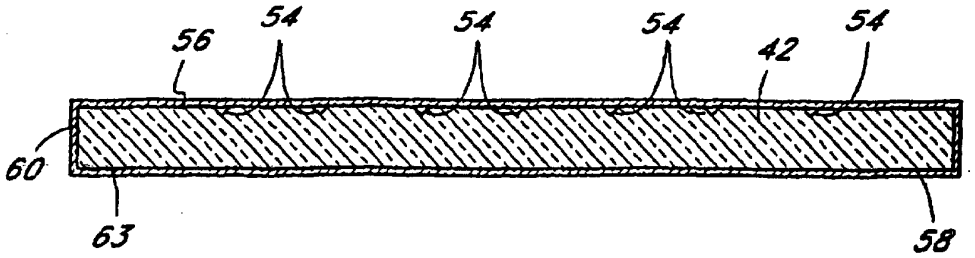

Figur 5

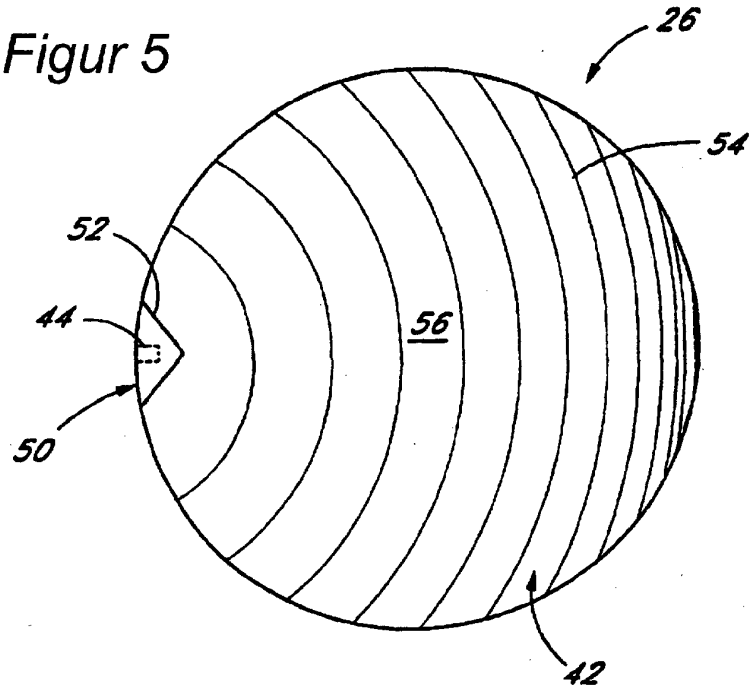

Figur 6

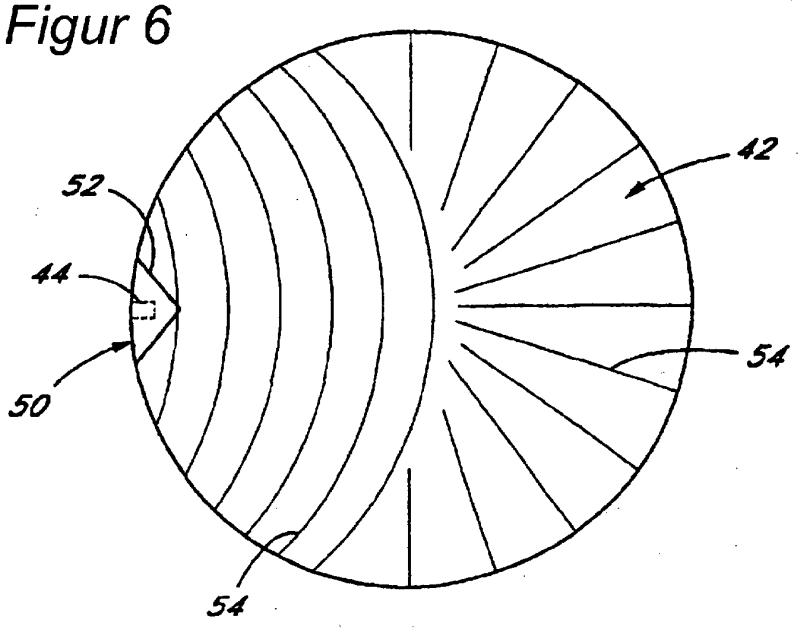

Figur 7

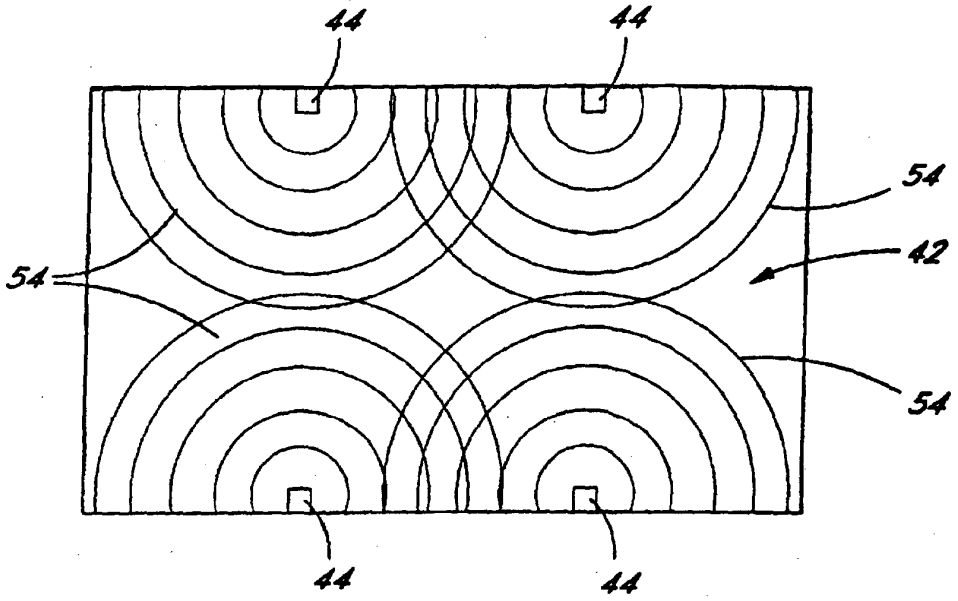

Figur 8

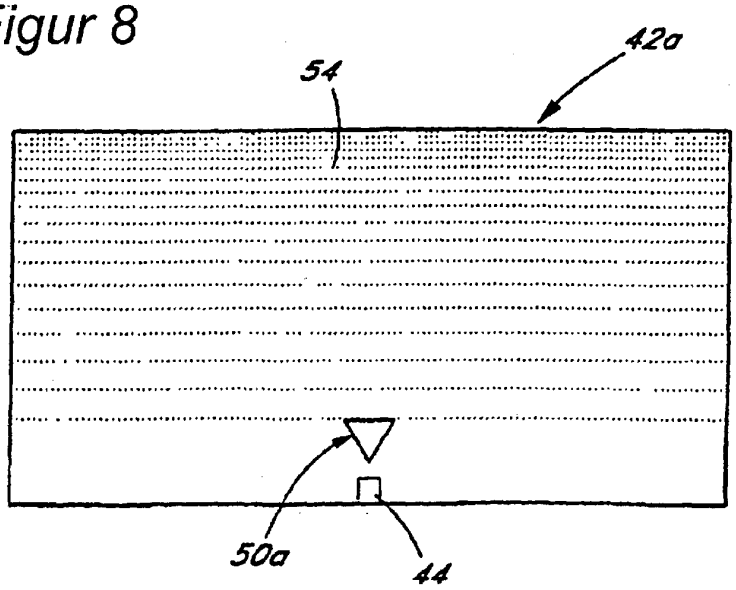

Figur 9

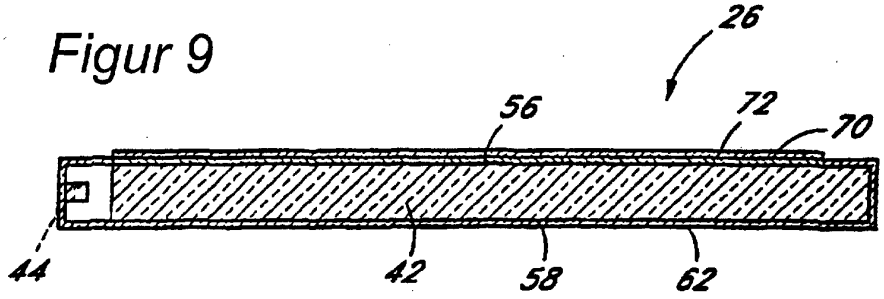

Figur 10

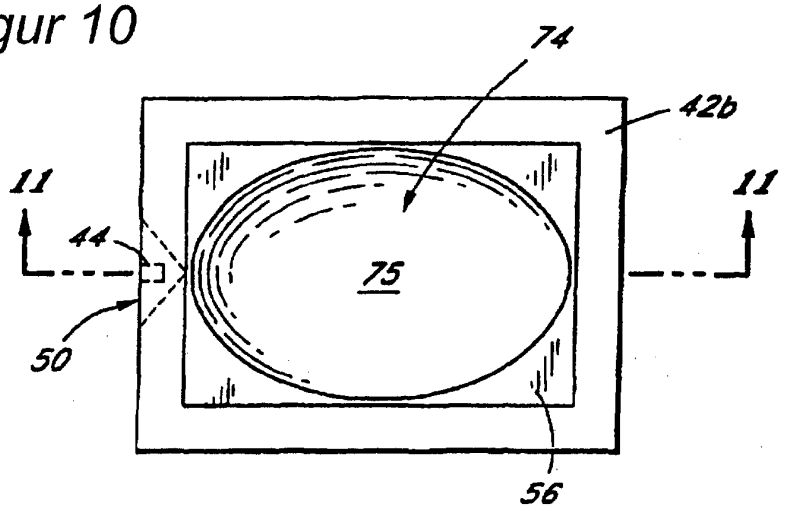

Figur 11

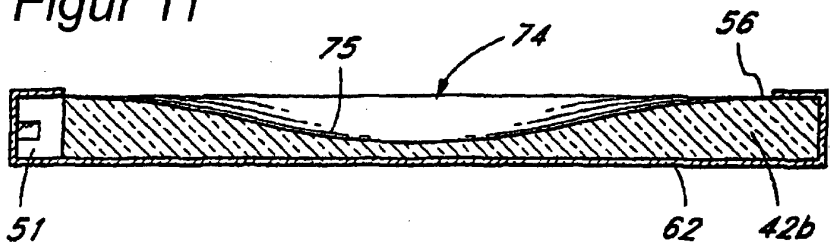

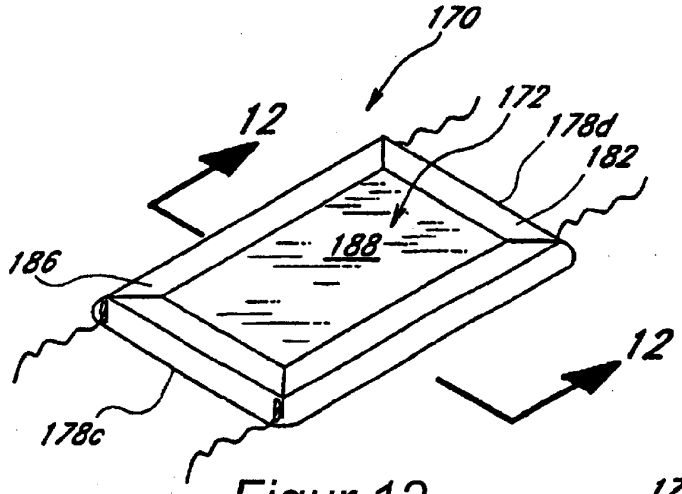

Figur 12

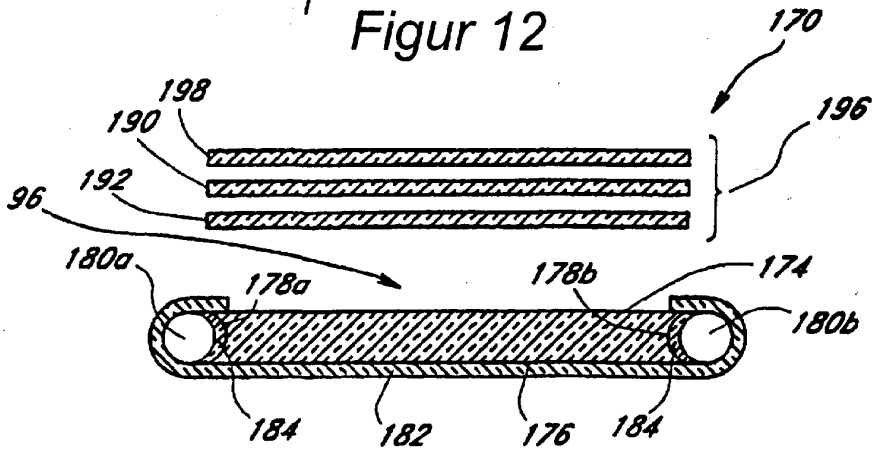

Figur 13

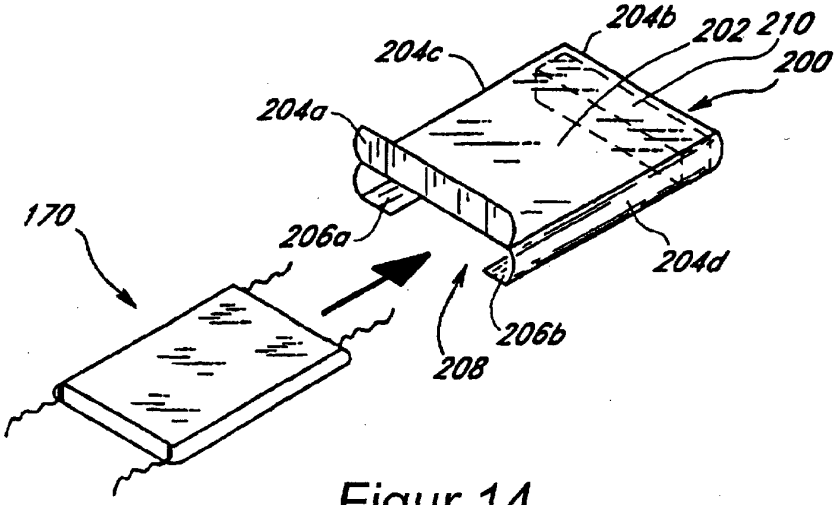

Figur 14

Figur 15

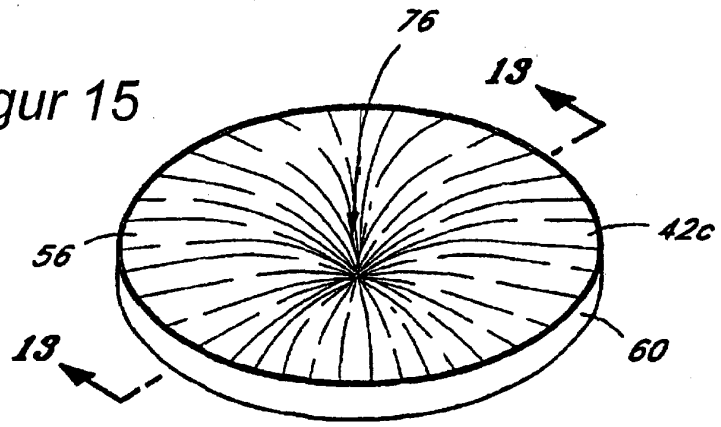

Figur 16

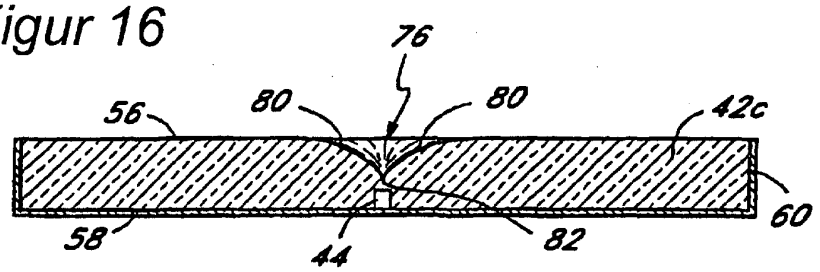

Figur 16A

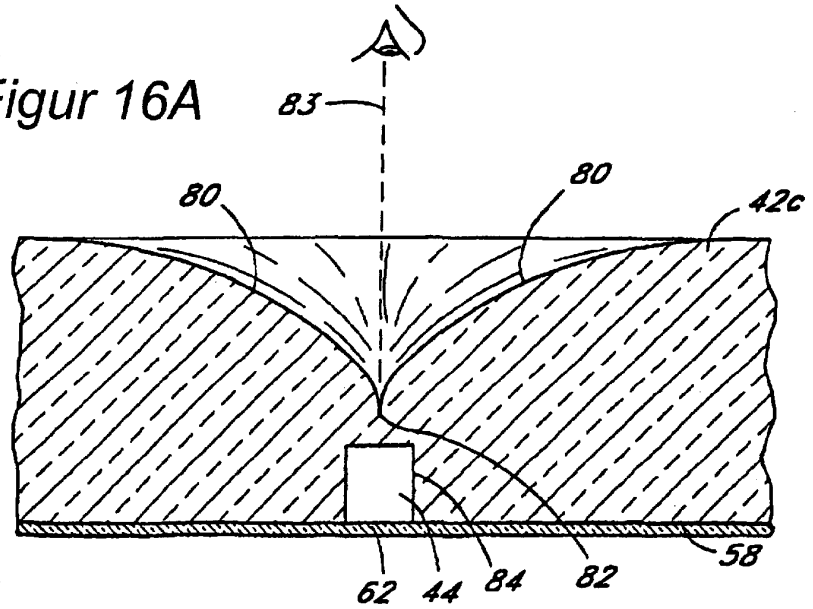

Figur 17

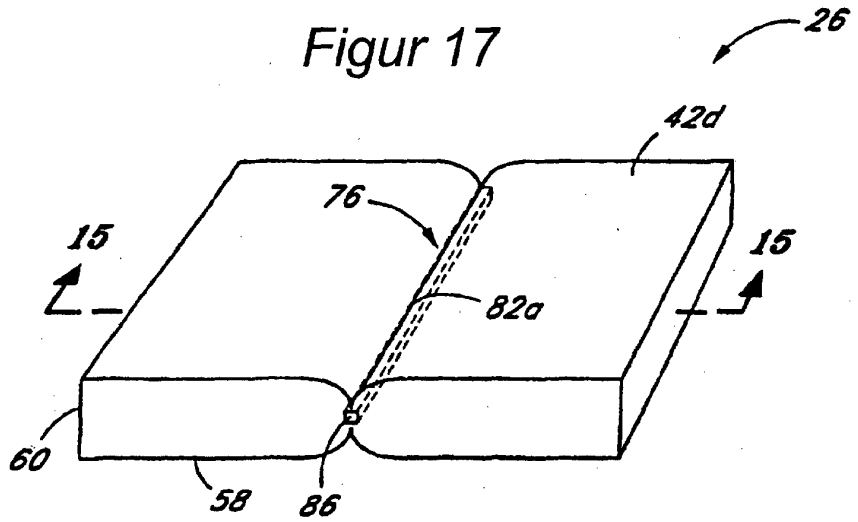

Figur 18

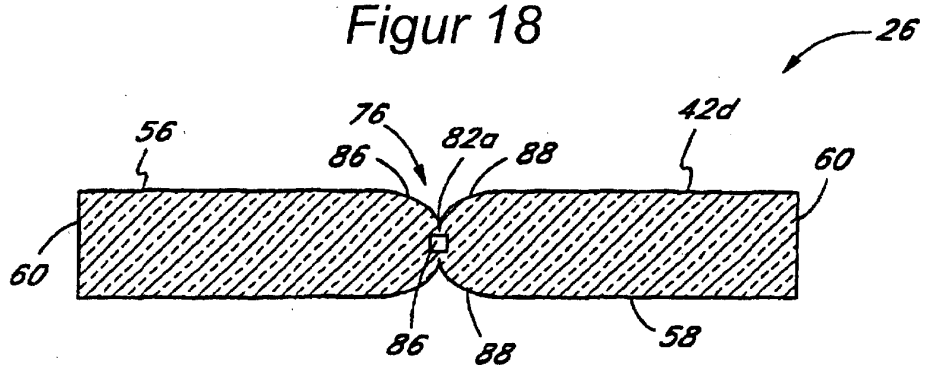

Figur 19
(STAND DER TECHNIK)

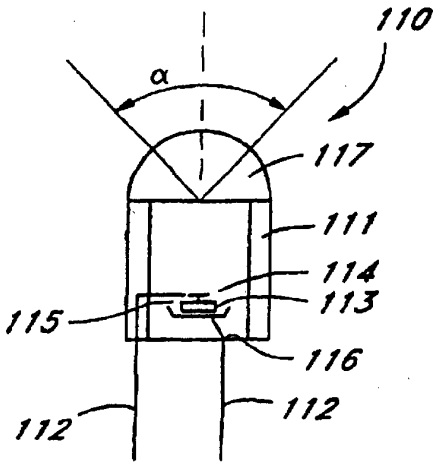

Figur 20
(STAND DER TECHNIK)

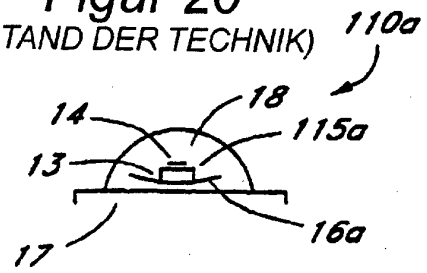

Figur 21

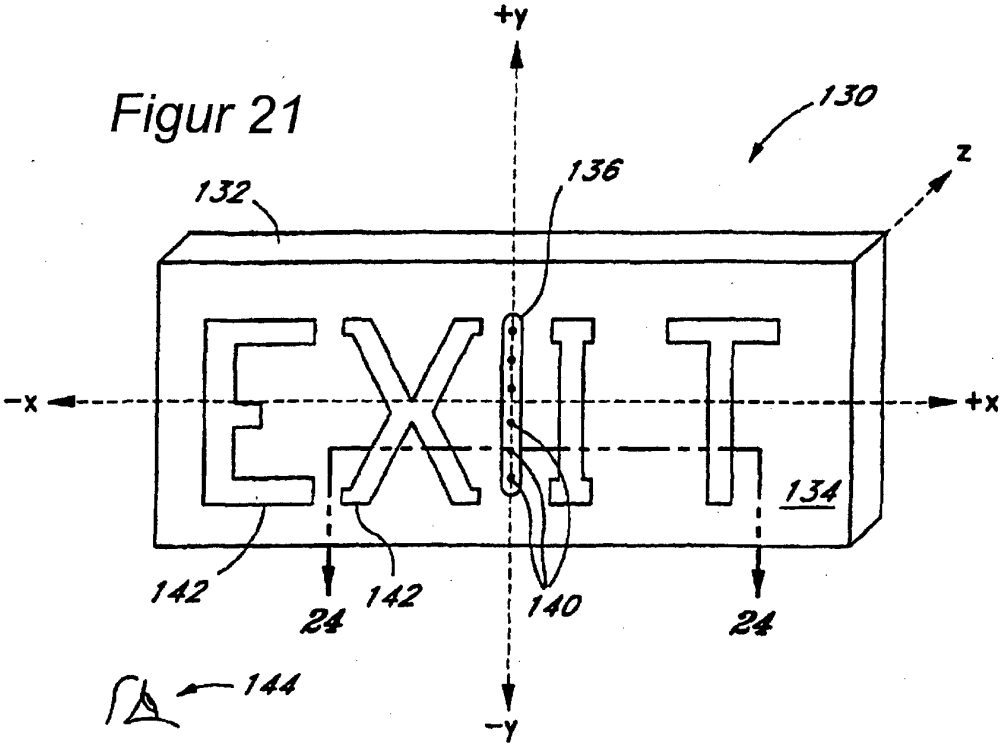

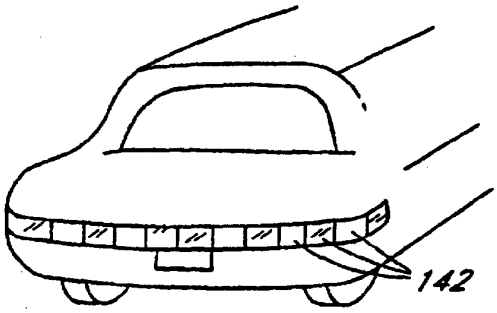

Figur 22

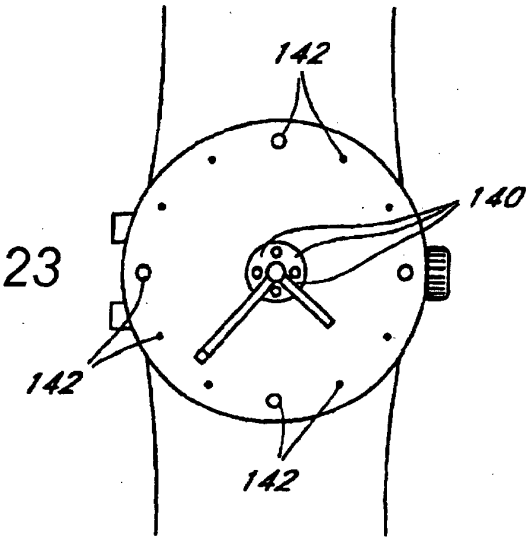

Figur 23

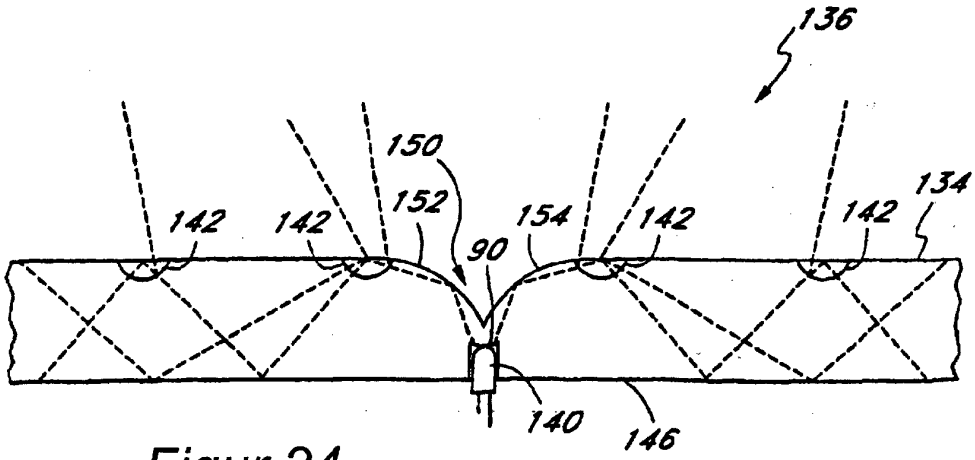

Figur 24

Figur 25

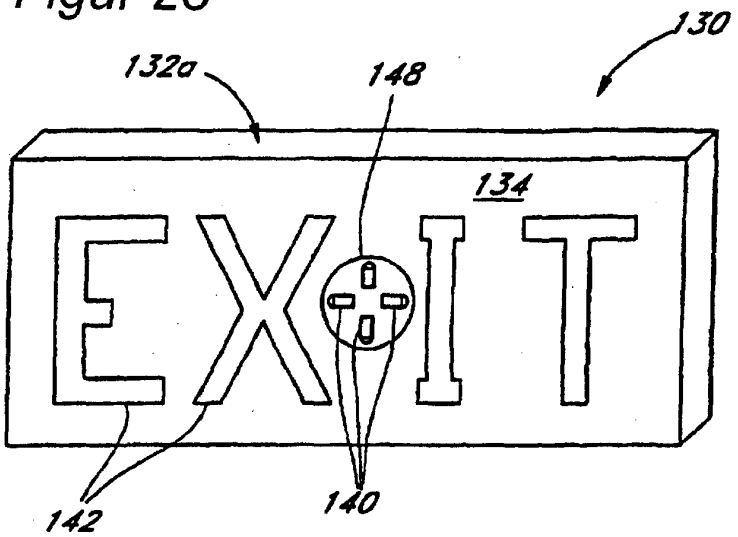

Figur 27

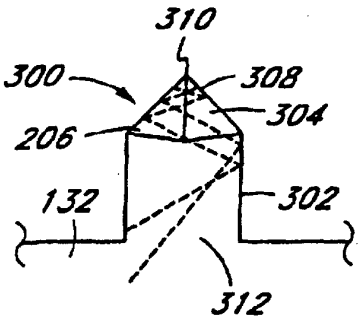

Figur 28

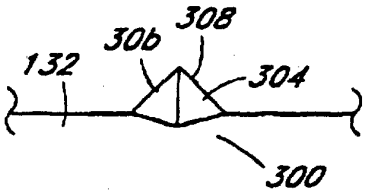

Figur 26

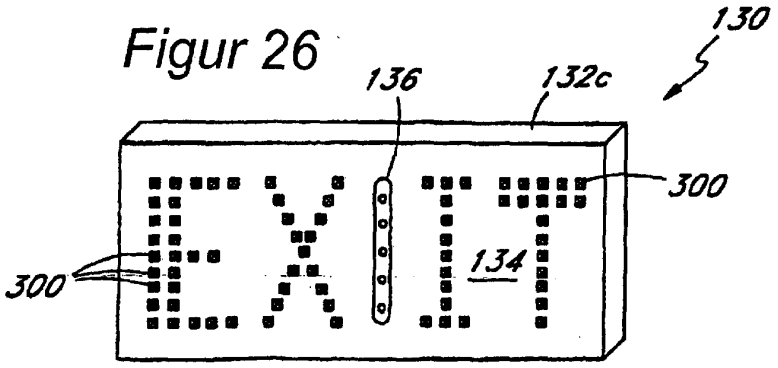

Figur 29

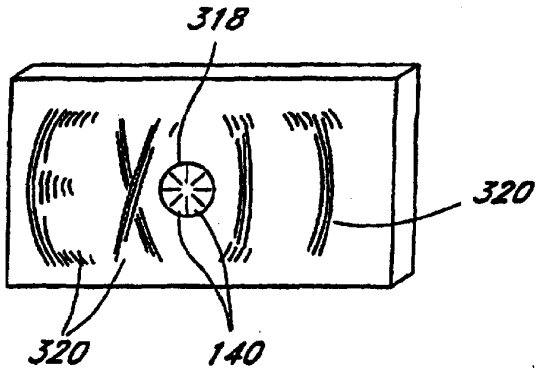

Figur 30

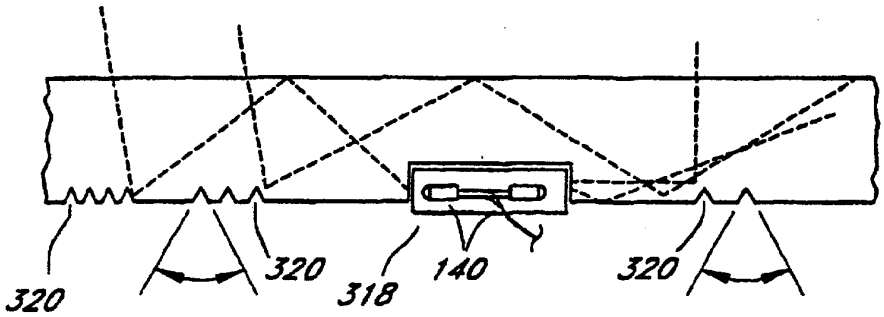

Illuminated display device, particularly house number, traffic sign or advertising sign.

Publication number: EP0403764 (A1)
Publication date: 1990-12-27
Inventor(s): SCHOENIGER KARL-HEINZ [DE]; SCHEID WINFRIED [DE] +
Applicant(s): INOTEC GMBH GES FUER INNOVATIV [DE] +
Classification:
- international: ***F21V8/00; G09F13/20;*** *G02B6/00; G09F13/04;* **F21V8/00**; **G09F13/20**; G02B6/00; G09F13/04; (IPC1-7): G09F13/18; G09F13/20
- European: G02B6/00L6I8; G09F13/20
Application number: EP19900107911 19900426
Priority number(s): DE19893919925 19890619

Also published as:
EP0403764 (B1)
US5027258 (A)
DE3919925 (A1)

Cited documents:
DE3825436 (A1)
DE2852960 (A1)
GB2113883 (A)

Abstract of **EP 0403764 (A1)**

Es wird eine beleuchtete Anzeigeeinheit, insbesondere eine Hausnummer, ein Verkehrsschild oder ein Werbeträger vorgeschlagen, die eine Lichtleitplatte (10) aufweist, bei der wenigstens ein elektrisches Leuchtelement (15) im Bereich wenigstens einer seitlichen Begrenzungskante angeordnet ist, wobei die Lichtleitplatte (10) zur Beleuchtung von Anzeigesymbolen dient, die vorzugsweise als Folien oder Aufdampfschichten auf der Lichtleitplatte angebracht sind. Wenigstens ein Bereich einer der seitlichen Begrenzungskanten der Lichtleitplatte (10) ist mit einer gegenüber der Dicke der Lichtleitplatte dickeren Lichtleitleiste (12) versehen, in der wenigstens ein Leuchtelement (15) eingesetzt ist. Der Übergang zwischen der Lichtleitleiste (12) und der Lichtleitplatte (10) ist optisch gut leitend ausgebildet.; Die Aussenflächen der Lichtleitleiste (12) sind wenigstens teilweise mit einer nach innen reflektierenden Schicht (16) versehen. Hierdurch ist es möglich, das Licht von Leuchtelementen, insbesondere Leuchtdioden mit grösserem Durchmesser vollständig in wesentlich dünnere Lichtleitplatten einzubringen, um Kosten und Gewicht reduzieren zu können.

Data supplied from the ***espacenet*** database — Worldwide

Result Page

Notice: This translation is produced by an automated process; it is intended only to make the technical content of the original document sufficiently clear in the target language. This service is not a replacement for professional translation services. The esp@cenet® Terms and Conditions of use are also applicable to the use of the translation tool and the results derived therefrom.

It becomes an illuminated display unit, in particular a house number, a traffic sign or an advertising medium proposed, which exhibit a light guiding plate (10), with which at least an electric luminous element (15) in the area at least a lateral delimitation edge arranged is, whereby the light guiding plate (10) serves for the illumination of indicator symbols, which are preferably mounted as films or evaporated films on the light guiding plate. At least an area of one of the lateral boundary edges of the light guiding plate (10) is provided with a light guidance border (12), thicker opposite the thickness of the light guiding plate, is inserted in which at least a luminous element (15). The transition between the light guidance border (12) and the light guiding plate (10) is optical good conductive formed.

The outer surfaces of the light guidance border (12) are at least partly provided with one inward reflective layer (16). Thereby it is possible, the light of luminous elements to bring in particular light emitting diodes with larger diameter complete into substantial thinner light guiding plates in order to be able to reduce costs and weight.

(19) Europäisches Patentamt
European Patent Office
Office européen des brevets

(11) Veröffentlichungsnummer: **0 403 764 A1**

(12) **EUROPÄISCHE PATENTANMELDUNG**

(21) Anmeldenummer: **90107911.1**

(51) Int. Cl.5: **G09F 13/18, G09F 13/20**

(22) Anmeldetag: **26.04.90**

(30) Priorität: **19.06.89 DE 3919925**

(43) Veröffentlichungstag der Anmeldung:
27.12.90 Patentblatt 90/52

(84) Benannte Vertragsstaaten:
AT BE CH DE DK ES FR GB GR IT LI LU NL SE

(71) Anmelder: **INOTEC GMBH GESELLSCHAFT FÜR INNOVATIVE TECHNIK**
Barbarossastrasse 40/6
D-7300 Esslingen(DE)

(72) Erfinder: **Schöniger, Karl-Heinz**
Barbarossastrasse 40/6
D-7300 Esslingen(DE)
Erfinder: **Scheid, Winfried**
Ringweg 14
D-7333 Ebersbach(DE)

(74) Vertreter: **Vetter, Hans, Dipl.-Phys. Dr. et al**
Patentanwälte Dipl.-Ing. Rudolf Magenbauer
Dipl.-Phys. Dr. Otto Reimold Dipl.-Phys. Dr.
Hans Vetter, Dipl.-Ing. Martin Abel,
Hölderlinweg 58
D-7300 Esslingen(DE)

(54) **Beleuchtete Anzeigeeinheit, insbesondere Hausnummer, Verkehrsschild, Werbeträger.**

(57) Es wird eine beleuchtete Anzeigeeinheit, insbesondere eine Hausnummer, ein Verkehrsschild oder ein Werbeträger vorgeschlagen, die eine Lichtleitplatte (10) aufweist, bei der wenigstens ein elektrisches Leuchtelement (15) im Bereich wenigstens einer seitlichen Begrenzungskante angeordnet ist, wobei die Lichtleitplatte (10) zur Beleuchtung von Anzeigesymbolen dient, die vorzugsweise als Folien oder Aufdampfschichten auf der Lichtleitplatte angebracht sind. Wenigstens ein Bereich einer der seitlichen Begrenzungskanten der Lichtleitplatte (10) ist mit einer gegenüber der Dicke der Lichtleitplatte dickeren Lichtleitleiste (12) versehen, in der wenigstens ein Leuchtelement (15) eingesetzt ist. Der Übergang zwischen der Lichtleitleiste (12) und der Lichtleitplatte (10) ist optisch gut leitend ausgebildet. Die Außenflächen der Lichtleitleiste (12) sind wenigstens teilweise mit einer nach innen reflektierenden Schicht (16) versehen. Hierdurch ist es möglich, das Licht von Leuchtelementen, insbesondere Leuchtdioden mit größerem Durchmesser vollständig in wesentlich dünnere Lichtleitplatten einzubringen, um Kosten und Gewicht reduzieren zu können.

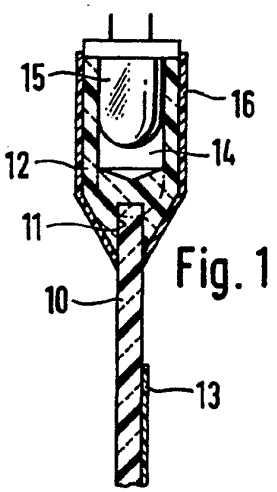

Fig. 1

EP 0 403 764 A1

Beleuchtete Anzeigeeinheit, insbesondere Hausnummer, Verkehrsschild, Werbeträger

Die Erfindung betrifft eine beleuchtete Anzeigeeinheit, insbesondere Hausnummer, Verkehrsschild, Werbeträger, bestehend aus einer Lichtleitplatte, bei der wenigstens ein elektrisches Leuchtelement im Bereich wenigstens einer seitlichen Begrenzungskante angeordnet ist, und mit von der Lichtleitplatte beleuchteten Anzeigesymbolen.

Bei einer derartigen, aus der DE-OS 3825436 bekannten Anzeigeeinheit werden Leuchtdioden als Leuchtelemente in randseitige Bohrungen entsprechenden Durchmessers der Lichtleitplatte eingesetzt. Das so in die Lichtleitplatte eingebrachte Licht der Leuchtelemente kann diese Lichtleitplatte im wesentlichen nur an Kontaktstellen oder Schnittkanten verlassen, da im übrigen im wesentlichen Totalreflexion an den Seitenflächen auftritt. Aus diesem Grunde sind alle seitlichen Begrenzungskanten mit einer reflektierenden Schicht versehen, die das Licht dort in die Platte zurückreflektieren. Das Licht kann somit lediglich an der Stelle austreten, an der die Anzeigesymbole angebracht sind. Auf diese Weise läßt sich eine hohe Lichtausbeute erreichen, so daß auch größere Platten mit einer geringen Energiezufuhr oder mit Solarenergie betrieben werden können.

Der Nachteil der bekannten Anordnung besteht darin, daß die Leuchtdioden im allgemeinen einen Durchmesser von 5 mm aufweisen, wobei auch Leuchtdioden mit Durchmessern von 8 und 10 mm zur Verfügung stehen. Insbesondere bei sehr großen Lichtleitplatten besteht der Wunsch, lichtstärkere Leuchtdioden mit größerem Durchmesser einzusetzen. Bei der bekannten Anordnung muß daher die Dicke der Lichtleitplatte entsprechend groß gewählt werden, so daß Lichtleitplatten mit einer Plattenstärke von 8 bis 14 mm erforderlich sind, in die die entsprechend großen Bohrungen für große Leuchtdioden einzubringen sind. Da jedoch gerade große Lichtleitplatten Leuchtdioden mit großen Durchmessern erforderlich machen, werden diese Lichtleitplatten sehr schwer und teuer. Hinzu kommt, daß serienmäßige fluoreszierende Lichtleitplatten im allgemeinen nur mit einer Materialstärke von 3 mm erhältlich sind, so daß teure Spezialanfertigungen bei Vorgabe von Mindestabnahmemengen erforderlich sind.

Eine Aufgabe der vorliegenden Erfindung besteht daher darin, eine beleuchtete Anzeigeeinheit der eingangs genannten Gattung zu schaffen, bei der zur Kosten- und Gewichtsreduzierung auch sehr dünne Lichtleitplatten verwendet werden können, wobei das Licht von Leuchtelementen auch mit wesentlich größerem Durchmesser verlustarm in diese Lichtleitplatten eingebracht werden kann.

Diese Aufgabe wird erfindungsgemäß dadurch gelöst, daß wenigstens ein Bereich einer der seitlichen Begrenzungskanten der Lichtleitplatte mit einer gegenüber der Dicke der Lichtleitplatte dickeren Lichtleitleiste versehen ist, in der wenigstens ein Leuchtelement eingesetzt ist, daß der Übergang zwischen der Lichtleitleiste und der Lichtleitplatte optisch gut leitend ausgebildet ist und daß die Außenflächen der Lichtleitleiste wenigstens teilweise mit einer nach innen reflektierenden Schicht versehen sind.

Die Vorteile einer solchen Anordnung bestehen insbesondere darin, daß ein variabler Einsatz von Dioden möglich ist, deren Durchmesser sich nicht mehr an der Dicke der Lichtleitplatte orientieren muß. Hierdurch können prinzipiell beliebig dünne Lichtleitplatten oder sogar Folien eingesetzt werden, wobei lediglich die Lichtleitleiste eine größere Dicke als der Durchmesser der Leuchtelemente bzw. Leuchtdioden aufweisen muß, die vorzugsweise als Leuchtelemente eingesetzt werden. Auch sehr große Platten, beispielweise für Werbeträger, können dadurch kostengünstig bei geringem Gewicht und unter Verwendung handelsüblicher Plattenstärken hergestellt werden. Durch den optisch gut leitenden Übergang zwischen der Lichtleitleiste und der Lichtleitplatte kann das Licht des Leuchtelements bzw. der Leuchtelemente nahezu so vollständig in die Lichtleitplatte eingebracht werden, wie wenn dieses Leuchtelement oder diese Leuchtelemente direkt in der Lichtleitplatte eingesetzt wären. Die reflektierende Schicht an den Außenflächen der Lichtleit leiste verhindert dabei ein dort unerwünschter Austritt von Licht und eine Verbesserung des Wirkungsgrads.

Durch die in den Unteransprüchen aufgeführten Maßnahmen sind vorteilhafte Weiterbildungen und Verbesserungen der im Anspruch 1 angegebenen Anzeigeeinheit möglich.

Im einfachsten Falle weist die Lichtleitleiste wenigstens eine Nut zur Aufnahme eines Randbereichs der Lichtleitplatte auf, wobei dann diese Lichtleitleiste auf einfache Weise durch einen Extrudiervorgang als Meterware hergestellt werden kann. Die Lichtleitleiste kann jedoch auch im wesentlichen aus zwei streifenförmigen, jeweils seitlich an einem Randbereich der Lichtleitleiste angebrachten Leistenelementen bestehen, die mit der Lichtleitplatte abschließen oder über deren Randbereich überstehen können. Die Bohrungen zur Aufnahme der Leuchtdioden können sich dann bis in die Lichtleitplatte hinein erstrecken.

Um einen optisch gut leitenden Übergang zwischen der Lichtleitleiste und der Lichtleitplatte zu erzielen, sind diese miteinander verklebt oder verschweißt, insbesondere hochfrequenz-verschweißt

EX1003, Page 697

(HF-verschweißt). Im Falle eines Verklebens wird ein optisch gut leitender Klebstoff verwendet.

Die Lichtleitplatte kann jedoch auch in der Nut der Lichtleitleiste verklemmt sein, wobei dann die aneinander liegenden Flächen der Klemmverbindung mit einer gut lichtleitenden Paste oder Flüssigkeit versehen werden.

In allen diesen Fällen, Verkleben, Verschweißen, Verklemmen mit lichtleitender Paste oder Flüssigkeit,wird ein Lichtübergang erreicht, der dem einer einstückigen Ausführung von Lichtleitleiste und Lichtleitplatte sehr nahe kommt. Es ist jedoch selbstverständlich auch möglich, diese Teile einstückig auszubilden.

Um eine Anzeigeeinheit zu erreichen, deren Anzeigesymbole von beiden Seiten her erkennbar sind, weist die Lichtleitleiste zweckmäßigerweise zwei Nuten zur Aufnahme der Randbereiche zweier Lichtleitplatten auf, wobei vorzugsweise zwischen diesen Nuten eine weitere Nut zur Aufnahme des Randbereichs einer Kontrastplatte vorgesehen ist. Die dann zwischen diesen Lichtleitplatten angeordnete undurchsichtige Kontrastplatte dient dann für beide Lichtleitplatten. Die in diese Lichtleitleiste eingesetzten Leuchtelemente können dabei in vorteilhafter Weise beide Platten beleuchten, auf deren Rückseite gleiche oder verschiedene Anzeigesymbole aufgebracht sein können.

Zur Fixierung zweier parallel zueinander angeordneter Lichtleitplatten, die wenigstens in einem Bereich mit einer Lichtleitleiste oder zwei nebeneinander liegenden Lichtleitleisten versehen sind, zusammen mit zwei äußeren Abdeckplatten aus durchsichtigem Material zum Schutz der Lichtleitplatten erweist sich ein diese Lichtleitplatten wenigstens teilweise umgreifender Halterahmen als günstig, da zusätzlich auch noch parallel und beabstandet diese Abdeckplatten hält. Auf diese Weise kann ein einziger Rahmen die gesamte Anordnung in der gewünschten Zuordnung fixieren.

Um diese Anordnung auch außerhalb der Lichtleitleisten in wenigstens einem Bereich zu fixieren, ist dort ein Halterahmen vorgesehen, der Nuten zur Aufnahme der Randbereiche der Lichtleitplatte, einer zwischen diesen angeordneten Kontrastplatte sowie der Randbereiche zweier Abdeckplatten an den beiden Außenseiten aufweist.

Zur einfachen und kostengünstigen Herstellung bestehen die Halterahmen zweckmäßigerweise aus Kunststoff, wobei eine außen durchlaufende Vertiefung zur Aufnahme eines metallischen Verstärkungsstreifens vorgesehen ist.

Die als Leuchtdioden ausgebildeten Leuchtelemente weisen insbesondere für Werbezwecke verschiedene Farben auf, so daß durch Ein- oder Ausschalten bzw. Variation der Helligkeiten eine sehr große Vielzahl verschiedener Farben durch Mischeffekte erzeugbar sind. Es ist auch möglich, verschiedenen Lichtleitleisten verschiedene Bereiche der Lichtleitplatte zuzuordnen, wobei diese Lichtleitleisten jeweils mehrere Leuchtelemente verschiedener Farbe aufweisen. Damit können diese verschiedenen Bereiche der Lichtleitplatte in wechselnden Variationen mit unterschiedlichen Farben beleuchtet werden, wobei auch Lichtspiele oder dergleichen denkbar sind.

Um Lichtverluste zu minimieren, sind alle Randbereiche der Lichtleitplatte außerhalb der mit Lichtleitleisten versehenen Bereiche mit einer reflektierenden Schicht versehen, die entweder eine Folie oder eine bedampfte Schicht sein kann.

Ausführungsbeispiele der Erfindung sind in der Zeichnung dargestellt und in der nachfolgenden Beschreibung näher erläutert. Es zeigen:

Fig. 1 ein erstes Ausführungsbeispiel mit einer in eine Lichtleitleiste eingesetzten Lichtleitplatte im Querschnitt,

Fig. 2 eine entsprechende Ausführung mit zwei in eine Lichtleitleiste eingesetzten Lichtleitplatten als zweites Ausführungsbeispiel,

Fig. 3 als drittes Ausführungsbeispiel eine Lichtleitleiste, die aus zwei streifenförmigen Leistenelementen besteht,

Fig. 4 als viertes Ausführungsbeispiel ein Aufbau gemäß Fig. 3, bei dem eine Leuchtdiode bis in die Licht leitplatte hineinreicht,

Fig. 5 eine Anordnung zweier Lichtleitplatten gemäß dem ersten Ausführungsbeispiel in einem Halterahmen im Querschnitt,

Fig. 6 eine Vorderansicht einer Anzeigeeinheit mit einer Lichtleitleiste an der oberen Kante einer Lichtleitplatte und

Fig. 7 eine Anordnung von drei separaten Lichtleitleisten an der oberen Kante einer in drei Bereiche unterteilten Lichtleitplatte.

Bei dem in Fig. 1 dargestellten ersten Ausführungsbeispiel ist eine nur teilweise im Querschnitt dargestellte Lichtleitplatte 10 aus durchsichtigem Material in eine Nut 11 einer Lichtleitleiste 12 eingesetzt, die ebenfalls aus durchsichtigem Material besteht. Als durchsichtiges Material kann im einfachsen Falle ein glasklarer Kunststoff, beispielsweise Acrylglas verwendet werden, wobei sich jedoch fluoreszierende Materialien noch weit besser eignen. Diese bestehen aus glasklarem Kunststoff, der mit Fluoreszenz-Farbstoff eingefärbt bzw. mit fluoreszierenden Partikeln versetzt ist. Derartige Lichtleitplatten haben die Eigenschaft, absorbiertes Licht durch Fluoreszenz wieder abzustrahlen. Die Fluoreszenz-Strahlung wird durch Totalreflexion an die Begrenzungskanten geleitet und dort konzentriert abgestrahlt, sofern nicht entgegenwirkende Maßnahmen vorgesehen werden. Im übrigen erfolgt ein Lichtaustritt an denjenigen Stellen, an denen andere Körper in engem Kontakt mit der Lichtleitplatte treten. Dies wird hier durch Anzeigesymbole

EX1003, Page 698

13 bewirkt, die an der vom Betrachter aus gesehen hinteren Fläche der Lichtleitplatte 10 angeordnet sind. Bei diesen Anzeigesymbolen 13 kann es sich um aufgeklebte Folien, aufgedampfte Flächen oder dergleichen handeln. An den Kontaktstellen tritt das Licht aus und beleuchtet dadurch die aufgebrachten Anzeigesymbole 13. Prinzipiell ist es auch möglich, Anzeigesymbole 13 einzuformen, insbesondere einzufräsen, wobei dann das Licht an den Frässtellen austritt und diese beleuchtet. Schließlich ist es prinzipiell auch möglich, an der Vorderseite der Lichtleitplatte undurchsichtige Anzeigesymbole aufzubringen, die dann in Kontrast mit dem Licht in der Lichtleitplatte treten.

Prinzipiell kann sowohl die Lichtleitplatte 10, wie auch die Lichtleitleiste 12 aus fluoreszierendem Material bestehen, jedoch reicht es oft aus, die Lichtleitleiste 12 aus gewöhnlichem, durchsichtigem Kunststoff herzustellen. In einer besonders einfachen und billigen Version kann selbstverständlich auch die Lichtleitplatte 10 aus einfachem, durchsichtigem Kunststoff bestehen.

Die Lichtleitleiste 12 weist eine gegenüber der Dicke bzw. Plattenstärke der Lichtleitplatte 10 größere Dicke auf und besitzt einen im wesentlichen rechteckigen Querschnitt, wobei im Bereich der Nut 11 Abschrägungen zur Lichtleitplatte 10 hin vorgesehen sind. Diese können selbstverständlich auch rund sein, eine andere Gestalt aufweisen oder ganz entfallen. Schließlich kann auch die Lichtleitleiste 12 selbst eine andere Querschnittsgestalt, z.B. einen dreieckigen Querschnitt aufweisen.

Die Verbindung der in die Nut 11 eingesetzten Lichtleitplatte 10 erfolgt durch Verkleben mittels eines gut lichtleitenden Klebstoffs oder durch Verschweißen, z.B. durch Hochfrequenz-Verschweißen. Alternativ hierzu ist es möglich, die Lichtleitplatte 10 auch in die Nut 11 einzuklemmen oder einzupressen, wobei dann vorzugsweise die Berührungsflächen mit einer gut lichtleitenden Paste oder Flüssigkeit versehen sind. Diese Maßnahmen haben das Ziel, einen möglichst ungehinderten und homogenen Lichtübergang von der Lichtleitleiste zur Lichtleitplatte 10 zu gewährleisten, um einer einstückigen Ausbildung möglichst nahezukommen, die selbstverständlich ebenfalls möglich ist.

Von der Oberseite der Lichtleitleiste 12 aus erstreckt sich eine Sackbohrung 14 ins Innere der Lichtleitleiste 12 zur Lichtleitplatte 10 hin. Diese Sackbohrung 14 kann vor der Lichtleitplatte 10 enden, kann sich jedoch auch bis in die Lichtleitplatte 10 hineinerstrecken, wie dies durch gestrichelte Linien angedeutet ist. In diese Sackbohrung 14 ist eine Leuchtdiode 15 eingesetzt, deren Außendurchmesser im wesent lichen dem Durchmesser der Sachbohrung 14 entspricht. Diese Leuchtdiode 15 kann - wie dargestellt - vor dem unteren Ende der Sackbohrung 14 enden, kann sich jedoch auch bis zu diesem Ende erstrecken. In der Querschnittsdarstellung gemäß Fig. 1 ist nur eine einzige Leuchtdiode 15 erkennbar, selbstverständlich können jedoch auch mehrere Leuchtdioden in regelmäßigen oder unregelmäßigen Abständen vorgesehen sein, wie dies im Zusammenhang mit den Figuren 6 und 7 noch näher erläutert wird.

Die Außenflächen der Lichtleitleiste 12 sind bis auf den Bereich der Nut 11 mit einer nach innen reflektierenden Schicht 16 versehen. Hierbei kann es sich um eine innenverspiegelte Folie handeln, jedoch kann diese Schicht 16 auch als Spiegelschicht aufgedampft oder auf andere Weise aufgebracht sein. Die Oberseite der Lichtleitleiste 12 ist selbstverständlich ebenfalls mit dieser Schicht 16 versehen, was in der Schnittdarstellung wegen der eingesetzten Leuchtdiode 15 nicht erkennbar ist. Im Einzelfall kann selbstverständlich auf die Verspiegelung einer bestimmten Fläche oder eines Flächenbereichs auch verzichtet werden, jedoch sollte ein möglichst großer Bereich der Lichtleitleiste 12 mit einer solchen Schicht 16 versehen sein, insbesondere die Schnitt- und Schrägflächen, um einen Lichtaustritt zu verhindern. Dadurch gelangt das gesamte Licht der Leuchtdiode 15 in die Lichtleitplatte 10.

Prinzipiell können anstelle von Leuchtdioden 15 auch andere kleine Leuchtelemente verwendet werden.

Durch diese Anordnung können sehr dünne Lichtleitplatten 10 von beispielsweise 3 mm Plattenstärke durch sehr große und lichtstarke Leuchtdioden 15 von 5, 8 oder sogar 10 mm Durchmesser beleuchtet werden, um die Kosten und das Gewicht der Anzeigeeinheit zu reduzieren.

Je nach Größe der Lichtleitplatte 10 kann eine derartige Lichtleitleiste 12 an einer Seitenkante der Lichtleitplatte 10 angeordnet sein, während die übrigen Seitenkanten mit einer entsprechenden reflektierenden Schicht 16 versehen sind. Es ist jedoch auch möglich, an gegenüberliegenden Kanten oder an allen Kanten dieser Lichtleitplatte 10 derartige Lichtleitleisten 12 vorzusehen.

Bei dem in Figur 2 dargestellen zweiten Ausführungsbeispiel sind zwei Lichtleitplatten 10 in paralleler Anordnung in entsprechende Nuten 11 einer breiteren Lichtleitleiste 12 eingesetzt. Zwischen diesen Nuten 11 ist eine weitere Nut 18 zur Aufnahme einer Kontrastplatte 19 vorgesehen, die zwischen den Lichtleitplatten 10 angeordnet ist. Hierdurch ist es möglich, eine Anzeigeeinheit zu schaffen, deren Anzeigesymbole 13 von beiden Seiten her gelesen werden können. Hierzu sind diese Anzeigesymbole 13 jeweils an der der Kontrastplatte 19 zugewandten Seite der Lichtleitplatte 10 angebracht. Selbstverständlich kann es sich hierbei auch um verschiedene Anzeige symbole 13 handeln. Eine derartige Kontrastplatte 19 kann selbst-

EX1003, Page 699

verständlich auch beim ersten und bei den folgenden Ausführungsbeispielen vorgesehen sein, um einen Kontrast der beleuchteten Anzeigesymbole 13 zum Hintergrund zu erreichen.

Die Lichtleitleiste 17 ist wiederum mit einer reflektierenden Schicht 16 versehen, wobei nunmehr die Leuchtdiode 15 beide Lichtleitplatten 10 beleuchten kann. Diese Lichtleitleiste 17 dient daher nicht nur zum Lichtübergang von der großen Leuchtdiode 15 zu den dünnwandigen Lichtleitplatten 10, sondern auch zu deren Halterung.

Bei dem in den Figuren 3 und 4 dargestellten dritten und vierten Ausführungsbeispiel besteht eine Lichtleitleiste 20 jeweils aus zwei streifenförmigen Leistenelementen 21, die an beiden Seitenflächen der Lichtleitplatte 10 an deren Randbereich befestigt sind, insbesondere verklebt oder verschweißt. Dabei stehen diese Leistenelemente 21 im dritten Ausführungsbeispiel gemäß Figur 3 über die Lichtleitplatte 10 über, während sie beim Ausführungsbeispiel gemäß Figur 4 mit der oberen Kante der Lichtleitplatte 10 abschließen. Auch hier entsteht durch optisch gut leitende Verklebung oder Verschweißung eine optisch homogene Erweiterung der Lichtleitplatte 10. Die Sackbohrung 14 gemäß dem dritten Ausführungsbeispiel verläuft noch im Bereich eines Schlitzes 22, der sich im überstehenden Bereich der Leistenelemente 21 bildet, während sich die Sackbohrung 14 beim vierten Ausführungsbeispiel gemäß Figur 4 in die Leistenelemente 21 und die Lichtleitplatte 10 hineinerstreckt.

Bei der in Figur 5 dargestellten Anordnung werden zwei Lichtleitplatten 10, die mit einer Lichtleitleiste 12 gemäß dem ersten Ausführungsbeispiel versehen sind,von einem im wesentlichen U-förmigen Halterahmen 23 aus Kunststoff gehalten. Eine Kontrastplatte 24 wird zwischen den beiden Lichtleitleisten 12 gehalten, während zwischen den gegenüberliegenden Außenseiten der Lichtleitleisten 12 und den Innenseiten der die Lichtleitleisten 12 übergreifenden Schenkel des Halterahmens 23 Abdeckplatten25 aus durchsichtigem Kunststoffmaterial oder Glas zum Schutz der Lichtleitplatten 10 angeordnet sind. Im Bereich der Leuchtdioden 15 weist der Halterahmen 23 einen Kanal 26 zur Aufnahme der Anschlüsse und Leitungen für die Leuchtdioden 15 auf. Am oberen Verbindungsbereich des U-Halterahmens 23 ist eine Einformung zur Aufnahme eines Metallbandes 27 vorgesehen, das vorzugsweise aus Aluminium besteht. Dieses Metallband 27 dient zur Versteifung des Halterahmens 23. Besteht dieser selbst aus einem steiferen Material oder aus Metall, so kann dieses Metallband selbstverständlich entfallen.

An den gegenüberliegenden Kanten der Lichtleitplatten 10, der Kontrastplatte 24 und der Abdeckplatten 25 ist ein Halterahmen 28 vorgesehen, der fünf Nuten 29 zur Aufnahme der Platten 10, 24, 25 im gewünschten und vorgesehenen Abstand aufweist. Auch dieser Halterahmen 28 weist wiederum zur Verstärkung einen entsprechenden Kanal und ein Metallband 27 auf. Die randseitigen Bereiche der Lichtleitplatten 10 gegenüber den Lichtleitleisten 12 sind mit der reflektierenden Schicht 16 versehen.

Selbstverständlich können auch beispielsweise zwei Halterahmen 23 an gegenüberliegenden Seitenkanten der Lichtleitplatten 10 angeordnet sein, wenn eine Beleuchtung von zwei Seiten erforderlich ist. Prinzipiell sind Halterahmen 28 dort vorgesehen, wo keine Lichtleitleisten 12 angeordnet sind. Im Einzelfalle können auch einzelne Kantenbereiche ohne Halterahmen sein.

Die Halterahmen 23, 28 können selbstverständlich auch für die anderen Ausführungsbeispiele verwendet werden, insbesondere für das Ausführungsbeispiel gemäß Figur 2. In diesem Falle wird die Kontrastplatte 24 durch die Kontrastplatte 19 ersetzt und die beiden Abdeckplatten 25 liegen an den Außenseiten der Lichtleitleiste 17 an.

Bei der in Figur 6 dargestellten Anzeigeeinheit ist an der oberen Kante der Lichtleitplatte 10 ein Halterahmen 23 angeordnet, während die übrigen Seitenkanten mit Halterahmen 28 versehen sind. Die Lichtleitleiste 12 im Halterahmen 23 weist acht in regelmäßigen Abständen angeordnete Leuchtdioden 15 auf. Die Zahl hängt von der Größe der Lichtleitplatte 10, der gewünschten Beleuchtungsstärke und der Lichtleistung der einzelnen Leuchtdioden ab.

Diese Leuchtdioden 15 können auch verschiedene Farben aufweisen, um verschiedenfarbige Beleuchtungen zu erzeugen. Dabei ergeben gleichzeitig leuchtende Leuchtdioden 15 unterschiedlicher Farbe durch Farbmischeffekte in der Lichtleitleiste bzw. der Lichtleitplatte wieder neue Farben, so daß eine große Farbenvielfalt erreichbar ist, was insbesondere für Werbezwecke von besonderer Bedeutung sein kann. Hierbei ist es auch möglich, programmierte Leuchtfolgen durch Variation der Leuchtzeit und Helligkeit der einzelnen Leuchtdioden vorzugeben.

Bei der in Figur 7 dargestellten Anzeigeeinheit sind an der Oberkante einer Lichtleitplatte 10 drei separate Halterahmen 23 vorgesehen, die jeweils Lichtleitleisten und Leuchtdioden 15 enthalten. Diese drei Halterahmen 23 sind drei Bereichen 30, 31, 32 der Lichtleitplatte 10 zugeordnet, die optisch voneinander getrennt sind, was durch gestrichelte vertikale Linien angedeutet ist. Die übrigen Bereiche der Oberkante der Lichtleitplatte 10 und der Unterkante sind mit Halterahmen 28 versehen. Selbstverständlich kann an der Oberkante auch ein durchgehender Halterahmen 28 vorgesehen sein, wobei lediglich die Lichtleitleisten nicht durchge-

EX1003, Page 700

hend darin angeordnet sind. Die Seitenkanten der Lichtleitplatte 10 sind nicht mit Halterahmen versehen. Auf diese Weise können die drei Bereiche 30 bis 32 durch die jeweils drei Leuchtdioden 15 in den Halterahmen 23 unabhängig voneinander beleuchtet werden, d.h. z.B. in drei verschiedenen Farben oder in drei verschiedenen, programmierten Beleuchtungsfolgen.

Ausgestaltungen gemäß dem eingangs angegebenen Stand der Technik sind selbstverständlich ebenfalls möglich. So kann die Anzeigeeinheit wegen der geringen erforderlichen elektrischen Leistung der Leuchtdioden 15 sowohl an ein Leitungsnetz, insbesondere ein Niederspannungsleitungsnetz angeschlossen werden, es ist jedoch auch möglich, Solarzellen an dieser Anzeigeeinheit anzubringen, z.B. an den Halterahmen oder an separaten, insbesondere schräg gestellten Wandungen. Weiterhin kann ein Dämmerungsschalter oder eine sonstige elektrische Steuerung zur Festlegung der Ein- und Ausschaltzeitpunkte vorgesehen sein.

Anstelle von Abdeckplatten zum Schutz der Lichtleitplatten können auch Schutzbeschichtungen auf den Lichtleitplatten treten, so daß dann besonders kompakte Anordnungen erzielbar sind, insbesondere in Verbindung mit dem Ausführungsbeispiel gemäß Fig. 2. Sind alle Randbereiche der Lichtleitplatten dichtend miteinander verbunden, so kann in vorteilhafter Weise zum Schutz gegen Kondenserscheinungen der Zwischenraum zwischen den Lichtleitplatten nach Art einer Verbundscheibe evakuiert oder mit einem Schutzgas gefüllt sein.

Ansprüche

1. Beleuchete Anzeigeeinheit, insbesondere Hausnummer, Verkehrsschild, Werbeträger, mit wenigstens einer Lichtleitplatte, mit von dieser beleuchteten Anzeigesymbolen und mit einer an wenigstens einem Bereich einer seitlichen Begrenzungskante der Lichtleitplatte angeordneten, eine größere Dicke als die Lichtleitplatte aufweisenden Lichtleitleiste, in der wenigstens ein Leuchtelement eingesetzt ist, wobei der Übergang zwischen der Lichtleitleiste und der Lichtleitplatte optisch gut leitend ausgebildet ist und die Außenflächen der Lichtleitleiste wenigstens teilweise mit einer nach innen reflektierenden Schicht versehen sind, dadurch gekennzeichnet, daß die Lichtleitleiste (12;17) wenigstens eine Nut (11) zur Aufnahme eines Randbereiches der Lichtleitplatte (10) aufweist, und daß die Leuchtelemente (15) in Bohrungen (14) der Lichtleitleiste (12; 17; 20) mit einem dem Durchmesser der Leuchtelemente (15) im wesentlichen entsprechenden Durchmesser eingesetzt sind.

2. Anzeigeinheit nach Anspruch 1, dadurch gekennzeichnet, daß die Lichtleitleiste (12; 17; 20) mit der Lichtleitplatte (10) verklebt oder verschweißt ist.

3. Anzeigeeinheit nach Anspruch 1, dadurch gekennzeichnet, daß die Lichtleitplatte (10) in der Nut (11) verklemmt ist, wobei die aneinander liegenden Flächen der Klemmverbindung vorzugsweise mit einer gut lichtleitenden Paste oder Flüssigkeit versehn sind.

4. Anzeigeeinheit nach einem der vorhergehenden Ansprüche, dadurch gekennzeichnet, daß die Lichtleitleiste (17) zwei Nuten (11) zur Aufnahme des Randbereichs zweier Lichtleitplatten (10) aufweist, wobei vorzugsweise zwischen diesen Nuten (11) eine weitere Nut (18) zur Aufnahme des Randbereichs einer Kontrastplatte (19) vorgesehen ist.

5. Anzeigeeinheit nach einem der vorhergehenden Ansprüche, dadurch gekennzeichnet, daß zwei parallel zueinander angeordnete Lichtleitplatten (10) wenigstens in einem Bereich einer oder zweier nebeneinander liegender Lichtleitleisten (12) mit einem diese wenigstens teilweise umgreifenden Halterahmen (23) versehen sind, in denen zwei die Lichtleitplatten (10) jeweils nach außen abdeckende, beabstandet und parallel zu diese angeordnete Abdeckplatte (25) aus durchsichtigem Material gehalten werden, wobei vorzugsweise der Halterahmen (23) einen Kabelkanal (26) für die Stromzuführungen der Leuchtelemente (15) aufweist.

6. Anzeigeeinheit nach einem der vorhergehenden Ansprüche, dadurch gekennzeichnet, daß zwei parallel zueinander angeordnete Lichtleitplatten (10) wenigstens in einem Bereich außerhalb der wenigstens einen Lichtleitleiste (12) mit einem Halterahmen (28) versehen sind, der Nuten (29) zur Aufnahme der Randbereiche der Lichtleitplatten (10) und einer zwischen diesen angeordneten Kontrastplatte (24) aufweist, und daß der Halterahmen (28) vorzugsweise zwei weitere Nuten (29) jeweils außerhalb der anderen Nuten (29) zur Aufnahme der Randbereiche zweier Abdeckplatten (25) aufweist.

7. Anzeigeeinheit nach Anspruch 5 oder 6, dadurch gekennzeichnet, daß die Halterahmen (23, 28) aus Kunststoff bestehen und eine außen durchlaufende Vertiefung zur Aufnahme eines metallischen Verstärkungsstreifens (27) aufweisen.

8. Anzeigeeinheit nach einem der vorhergehenden Ansprüche, dadurch gekennzeichnet, daß die Leuchtelemente (15) als Leuchtdidioden ausgebildet sind, die insbesondere verschiedene Farben aufweisen.

9. Anzeigeeinheit nach Anspruch 8, dadurch gekennzeichnet, daß verschiedene Lichtleitleisten verschiedenen Bereichen der Lichtleitplatte (10) zugeordnet sind, wobei diese Lichtleitleisten jeweils mehrere Leuchtelemente (15) verschiedener Farbe aufweisen.

10. Anzeigeinheit nach einem der vorhergehenden Ansprüche, dadurch gekennzeichnet, daß alle

EX1003, Page 701

Randbereiche der Lichtleitplatte (10) außerhalb der mit Lichtleitleisten (12; 17; 20) versehenen Bereiche mit einer reflektierenden Schicht (16) versehen sind.

11. Anzeigeeinheit nach einem der vorhergehenden Ansprüche, dadurch gekennzeichnet, daß die zu beleuchtenden Anzeigesymbole (13) vom Betrachter aus gesehen an der jeweils hinteren Fläche der Lichtleitplatte (10) aufgeklebt oder aufgedampft sind.

12. Anzeigeeinheit nach einem der vorhergehenden Ansprüche, dadurch gekennzeichnet, daß die Lichtleitplatte (10) und/oder die Lichtleitleiste (12; 17; 20) fluoreszierende Partikel enthält.

EX1003, Page 702

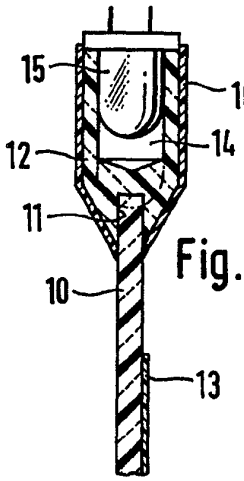

Fig. 1

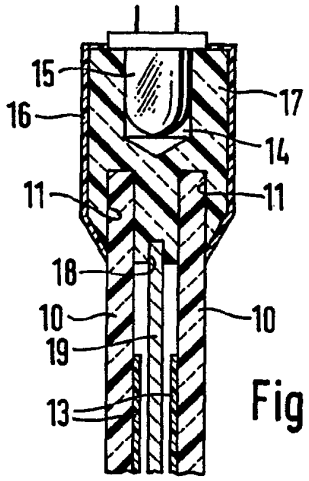

Fig. 2

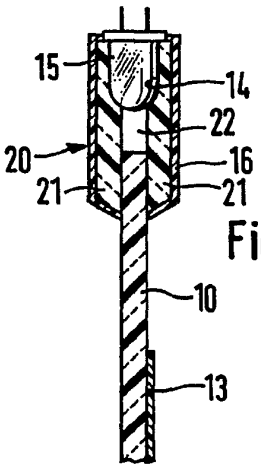

Fig. 3

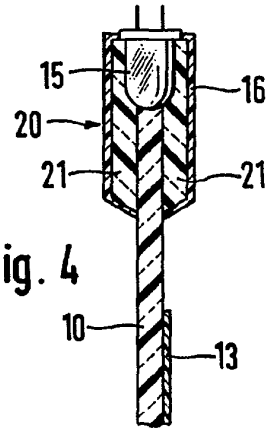

Fig. 4

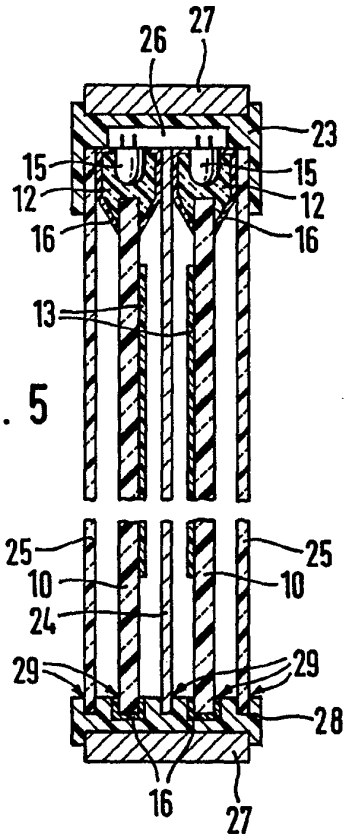

Fig. 5

Fig. 6

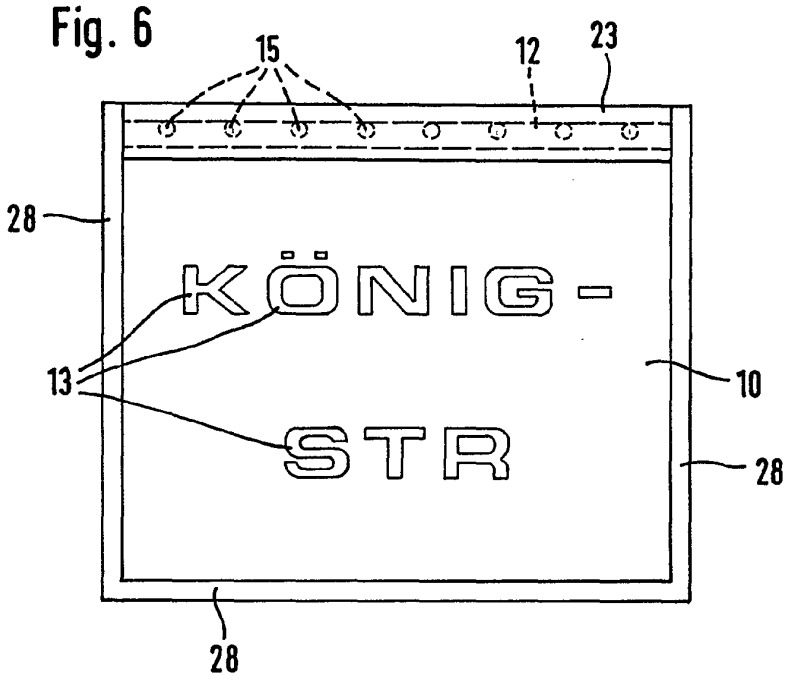
15
12
23
28
KÖNIG-
13
10
STR
28
28

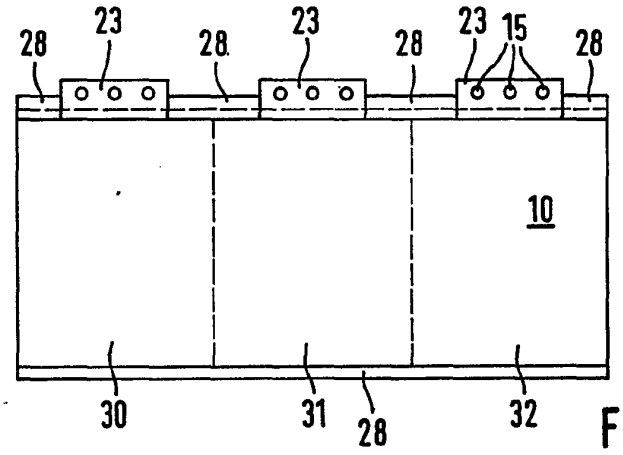
28
23
28
23
28
23
15
28
10
30
31
28
32

Fig. 7

Europäisches Patentamt

EUROPÄISCHER RECHERCHENBERICHT

Nummer der Anmeldung

EP 90 10 7911

EINSCHLÄGIGE DOKUMENTE

Kategorie	Kennzeichnung des Dokuments mit Angabe, soweit erforderlich, der maßgeblichen Teile	Betrifft Anspruch	KLASSIFIKATION DER ANMELDUNG (Int. Cl.5)
D,A	DE-A-3 825 436 (INOTEC) * Spalte 4, Zeile 46 - Spalte 6, Zeile 11; Figuren 1,2 * ---	1	G 09 F 13/18 G 09 F 13/20
A	DE-A-2 852 960 (O. WALPER) * Seite 13, Zeile 22 - Seite 14, Zeile 13; Figur 7 * ---	1	
A	GB-A-2 113 883 (M. SCHULMAN) -----		

RECHERCHIERTE SACHGEBIETE (Int. Cl.5)

G 09 F
F 21 V
F 21 P

Der vorliegende Recherchenbericht wurde für alle Patentansprüche erstellt

Recherchenort	Abschlußdatum der Recherche	Prüfer
DEN HAAG	09-10-1990	GALLO G.G.

KATEGORIE DER GENANNTEN DOKUMENTE

X : von besonderer Bedeutung allein betrachtet
Y : von besonderer Bedeutung in Verbindung mit einer anderen Veröffentlichung derselben Kategorie
A : technologischer Hintergrund
O : nichtschriftliche Offenbarung
P : Zwischenliteratur

T : der Erfindung zugrunde liegende Theorien oder Grundsätze
E : älteres Patentdokument, das jedoch erst am oder nach dem Anmeldedatum veröffentlicht worden ist
D : in der Anmeldung angeführtes Dokument
L : aus andern Gründen angeführtes Dokument

& : Mitglied der gleichen Patentfamilie, übereinstimmendes Dokument

EPO FORM 1503 03.82 (P0403)

(19) Europäisches Patentamt
European Patent Office
Office européen des brevets

(11) Publication number: **0 442 529 A2**

(12) **EUROPEAN PATENT APPLICATION**

(21) Application number: **91102200.2**

(51) Int. Cl.5: **G02F 1/1335**

(22) Date of filing: **15.02.91**

(30) Priority: **16.02.90 JP 33813/90**
02.07.90 JP 172809/90

(43) Date of publication of application:
21.08.91 Bulletin 91/34

(84) Designated Contracting States:
DE GB IT NL

(71) Applicant: **Tosoh Corporation**
4560, Kaisei-cho
Shinnanyo-shi, Yamaguchi-ken 746(JP)

(72) Inventor: **Kashima, Keiji**
2398, Kawaraguchi
Ebina-shi Kanagawa(JP)
Inventor: **Yoshida, Naoki**
1691, Nakanoshima, Tama-ku
Kawasaki-shi, Kanagawa(JP)
Inventor: **Shoji, Osamu**
2-22-3, Oujihonmachi
Kita-ku, Tokyo(JP)
Inventor: **Yanagi, Eiichi**
328, Hiyoshihoncho, Kohoku-ku
Yokohama-shi, Kanagawa(JP)
Inventor: **Fukunishi, Takumi**
2634-15, Tana
Sagamihara-shi, Kanagawa(JP)

(74) Representative: **Kinne, Reinhard, Dipl.-Ing. et al**
Patentanwaltsbüro
Tiedtke-Bühling-Kinne-Grupe-Pellmann-Grams-Struif Bavariaring 4
W-8000 München 2(DE)

(54) **Back lighting device for a panel.**

(57) An improved backlighting device for liquid-crystal display panels comprising a linear light source the length of which is equal to or less than the length of an end portion of a light conducting plate at which light is admitted from the linear light source placed adjacent to it, the linear light source being enclosed with a light diffusing reflector that has a slit formed in the surface through which incident light is admitted into the light conducting plate and which is provided in such a way as to form a clearance from the surface of the linear light source, one major surface of the light conducting plate being partially covered with a light diffusing material under specified conditions that has a higher refractive index than the material of which the light conducting plate is made, the major surface being further covered with a specular or light diffusing/reflecting plate, with a plurality of light diffusing plates being provided on the other major (light emerging) surface of the light conducting plate.

FIG. 1

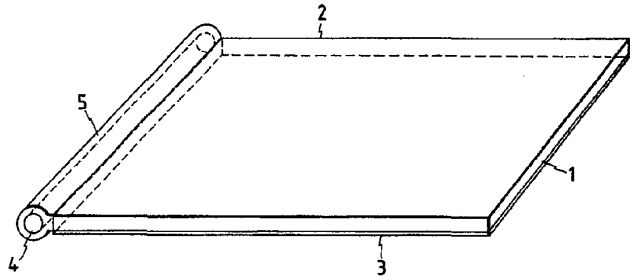

EP 0 442 529 A2

BACK LIGHTING DEVICE FOR A PANEL

Background of the Invention

The present invention relates to a back lighting device for liquid-crystal panels that illuminates transmissive or semi-transmissive panels from the rear side.

Thin liquid-crystal displays provided with a backlighting mechanism that allows easy viewing of information on the screen are used with recent versions of lap-top or book type word processors and computers. The backlighting mechanism in common use adopts an "edge lighting" method in which a linear light source such as a fluorescent tube is provided at one end portion of a transmissive light conducting plate as shown in Fig. 1.

In order to insure uniform light emission from a plane in the "edge lighting" method, the effective emission length of a fluorescent tube that excludes non-emitting portions such as the base and electrodes may be made greater than the length of an end face that corresponds to the display portion of the light conducting plate. However, this idea involves two major problems; first, the overall size of the device is increased compared to the liquid-crystal display face; secondly, the amount of incident light that cannot be effectively admitted into the light conducting plate increases to reduce the efficiency of power to luminance conversion.

In another approach, a certain method of converging light is applied to the light conducting plate so as to enable the use of a fluorescent tube the length of which is equal to or smaller than the length of an end portion of the light conducting plate. Even if this is possible, the portions of the fluorescent tube near the electrodes have a tendency to become dark as it is turned and off many times. Thus, in the initial period of use, the backlighting device may produce uniform light emission from a plane but, as a result of prolonged use, the luminance of the light conducting plate in areas where light is guide from the neighborhood of the electrodes will decrease, causing unevenness in the luminance distribution across the surface of the plate.

When back lighting devices are driven with a battery as is often the case today, a further improvement in the efficiency of power to luminance conversion is desired. To meet this need, the end face of the light conducting plate which is the farthest from the linear light source is covered with a light diffusing plate so that no part of the incident light will emerge from that end face by travelling through the plate in the same way as light is guided through optical fibers. This method, however, has had the problem that the luminance of the light emitting surface in the neighborhood of the end face covered with the light diffusing plate becomes so high as to provide an uneven luminance distribution across the emitting surface.

Summary of the Invention

The present invention has been achieved under these circumstances and it provides an improved backlighting device for liquid-crystal display panels.

A back lighting device for a liquid-crystal panel according to a first aspect of the present invention comprises: a light conducting plate made of a light-transmissive material; a linear light source provided at the end portion of at least one side of the light conducting plate, at least the portion of the linear light source which is capable of uniform light emission being equal to or less than the length of the end portion, the linear light source being enclosed with a light diffusing reflector that has a slit through which light emitted from the linear light source is admitted into one side of the light conducting plate and that is provided in such a way a clearance is left between the outer surface of the linear light source and the opposing inner surface of the reflector; a coating of a light diffusing material that has a higher refractive index than the light-transmissive material and that is provided in a dot pattern on one major surface of the light conducting plate in such a way as to provide an area in which the coverage (Y) of the coating satisfies the functional relationship $Y = aX^n$ or $Y = a^x$ or the approximate relationship thereof (where X or x represents the distance from the linear light source; n = 1.7 - 3.5; and a is determined by regression of a mathematical expression determined by coverage of the starting and ending point on the light conducting plate) and in such a way that the coverage (Y') of the coating which is provided on the major surface of the light conducting plate in an increasing amount towards both ends of a line parallel to the axis of the linear light source satisfies the functional relationship $Y' = a'X'^n$ or $Y, = a'^{x'}$ or the approximate relationship thereof (where X' or x' represents the distance the coating departs from a line vertical to the center of the linear light source towards both ends thereof; n = 1.7 - 3.5; and a' is determined by regression of a mathematical expression determined by coverage of the starting and ending point on the light conducting plate) over the range from the area that is the nearest to the linear light source and where X' is at maximum

(each end of the light conducting plate) to the area where Y = Y' with Y' decreasing or increasing gradually and/or is constant with increasing X along the both ends of the light conducting plate; a specular or light diffusing/replacing plate that covers the coated surface; and at least one light diffusing plate provided on the other major (light emerging) surface of the light conducting plate.

A second aspect of the present invention uses a linear light source the length of which is equal to or less than the length of an end portion of a light conducting plate at which light is admitted from the linear light source placed adjacent to it, the linear light source being enclosed with a light diffusing reflector that has a slit formed in the surface through which incident light is admitted into the light conducting plate and which is provided in such a way as to form a clearance from the surface of the linear light source, one major surface of the light conducting plate being partially covered with a light diffusing material under specified conditions that has a higher refractive index than the material of which the light conducting plate is made, the major surface being further covered with a specular or light diffusing/reflecting plate, with a plurality of light diffusing plates being provided on the other major (light emerging) surface of the light conducting plate.

As a result of the various studies further conducted in order to solve the aforementioned problems of the prior art, the present inventors found that a back lighting device for liquid-crystal panels of a third aspect of the present invention that would provide a uniform luminance distribution across the light emitting surface could be produced when a light conducting plate made of a light-transmissive material was partly coated with a light diffusing material having a higher refractive index than said light-transmissive material in such a way that the density of coating increased toward the side of the plate which was the farthest from the light source and when the farthest end face of the plate was subjected to a certain treatment.

On the basis of this finding, the present inventors studied various conditions for coating the light diffusing material. As a result, they found that a more uniform luminance distribution could be attained by adopting the following two means. First, a light diffusing material having a higher refractive index than the transmissive material of which the light conducting plate is formed is coated on one major surface of the plate in such a way that the coverage of said coating increases with the distance from the end portion of one side of the plate that faces a linear light source or in such a way that the neighborhood of the end portion of the plate which is the farthest from the light source has an area in which the coverage of the coating is equal to that in the other areas or an area in which the coverage of the coating is greater than that in the other areas but in which the rate of increase of said coverage is smaller than that in the other areas. Second, the end face of the plate which is the farthest from the light source is covered with a specular reflecting plate or film.

The area of the light conducting plate in which the coverage with the coating of a light diffusing material is equal to that in the other areas or the area in which the coverage of the coating is greater than that in the other area but in which the rate of increase of said coverage is smaller than that in the other areas is in the neighborhood of the end portion of the light conducting plate which is the farthest from the linear light source. When the distance from the side of the plate which faces the light source to the end face of the plate which is covered with a specular reflecting plate or film is written as L, an example of the above-defined area is one that covers no more than about 2/10 of L as measured from said end face of the plate.

Brief Description of the Drawings

Fig. 1 is a perspective view of a back lighting device according to an embodiment of the present invention;

Fig. 2 is a cross section of the same back lighting device;

Fig. 3 is a diagram showing the distribution profile of a light scattering material coated on the light conducting plate;

Figs. 4 - 5 are diagrams showing the profiles of luminance distribution obtained in Examples 1 - 2 of the first aspect of the present invention, in which incident light is admitted from the right side;

Figs. 6 - 7 are diagrams showing the profiles of luminance distribution obtained in Comparative Examples 1 - 2, in which incident light is admitted from the right side;

Fig. 8 is a diagram showing the points of luminance measurement;

Fig. 9 is a diagram showing the state of light transmission through a light conducting plate coated with a light diffusing material in accordance with a second aspect of the present invention (as indicated by curve 1) and through a light conducting plate coated uniformly over its surface with a light-diffusing material (as indicated by curve 2);

Fig. 10 is a diagram showing the profile of luminance distribution vs the distance from a light source, with the percent coverage of a light conducting plate being taken as a parameter and increasing in proportion to a power of the distance from a light source;

Fig. 11 is a diagram showing the profile of luminance distribution vs the distance from a light source, with the percent coverage of coating at a start and an end point being taken as a parameter;

Fig. 12 is a cross section of the embodiment of the third aspect of the present invention;

Fig. 13 is a diagram showing the distribution profile of a light scattering material coated on the light conducting plate; and

Fig. 14 is a diagram showing the profile of luminance distribution vs the distance from a light source.

Detailed Description of the Preferred Embodiment

The present invention is described below in greater detail with reference to the accompanying drawings.

Fig. 1 is a perspective view illustrating an embodiment of the present invention, and Fig. 2 is a cross-sectional view of the same embodiment. Shown by 1 is a light conducting plate that may be made of any material that is capable of efficient light transmission, as exemplified by quartz, glass, light-transmissive natural or synthetic resins such as acrylic resins. Shown by 2 in Figs. 1 and 2 is a light diffusing plate that transmits light from the light conducting plate after scattering it.

The light conducting plate is provided with a light scattering material 6 such as a paint or printing ink that contain a pigment of high diffusion reflectance that has a higher refractive index than the material of which the light conducting plate is made. Such a paint or printing ink is screen-printed or otherwise printed in dots on the surface of the light conducting plate under the conditions that are specified hereinafter. A specular or light diffusing reflector 3 is provided in such a way as to cover substantially all surface of the light conducting plate that is already covered with the light scattering material. Shown by 4 is a linear light source that is enclosed with a light diffusing reflector 5. The reflector has a slit formed in the surface through which incident light from the linear light source is admitted into an end portion of the light conducting plate and it is provided in such a way as to form a certain clearance between the outer surface of the light source and its inner surface. The linear light source 4 is provided in close proximity to at least one end face of the light conducting plate in such a way that its central axis is generally parallel to that end face. While various types of linear light source can be used such as a fluorescent tube, a tungsten incandescent tube, an optical rod and an array of LEDs, a fluorescent tube is preferred. At least the portion of the linear light source which is capable of uniform light emission has a length that is equal to or less than the length of the end portion of the light conducting plate which is in close proximity of the light source. Typically, the length of that portion of the linear light source may be about 3/4 of the length of the end portion of the light conducting plate. Similarly, the overall length of the linear light source is preferably equal to or less than the length of the end portion of the light conducting plate.

The backlighting device of the first and second aspects of the present invention which has its principal part composed in the manner described above is to be used with display panels, particularly with liquid-crystal display panels. In this particular case, the backlighting device of the present invention preferably has the following constitutional features.

1) The linear light source is enclosed with a reflector that has a slit in the surface through which incident light is to be admitted into an end face of the light conducting plate. The width of the clearance between the outer surface of the linear light source and the corresponding inner surface of the reflector may be in the range of from about 0.5 to about 5 mm, preferably from 1 to 2 mm. From the performance viewpoint, the reflector should have the highest possible diffusion reflectance, preferably at least 85%. The interaction of the linear light source enclosed with the reflector and the dot pattern of the light scattering material to be discussed just below will help eliminate not only the non-emitting portions of the linear light source such as the base and the electrodes but also the adverse effects of blackening with time in the neighborhood of the electrodes.

2) The light scattering material is formed in a dot pattern on the surface of the light conducting plate. Dots may be of any shape such as a circle or rectangle. They may also be formed of crosslines. Such dots are formed in a grid pattern, with each dot being located at the point where two imaginary lines are crossed at right angles. Adjacent crossed lines are spaced by a predetermined distance which is preferably in the range of 0.5 - 3 mm, more preferably 0.8 - 2mm,

with an appropriate distance being selected in accordance with the thickness of the light conducting plate.

The surface of the light conducting plate is covered with the light scattering material in such a way that the percent coverage is preferably 1 - 50% of the plate surface in areas near the linear light source and 50 - 100% in the area that is the farthest from the light source. Preferably, the coverage with the light scattering material increases with the distance from the light source under the conditions just described below. The term "percent coverage" as used herein means the proportion of a unit area of the light conducting plate that is occupied by the coating of the light scattering material.

The light conducting plate to be used in the present invention is preferably such that the percent coverage with the light scattering material increases in proportion to a power of the distance from the linear light source, with the power ranging from 1.7 to 3.5 or with the approximate relationship. More preferably, the light scattering material is coated on one major surface of the light conducting plate in such a way as to provide an area in which the coverage (Y) of the coating satisfies the relationship $Y = aX^n$ or $Y = a^x$ or the approximate relationship thereof, where X or x represents the distance from the linear light source to the light scattering material in a grid pattern. Areas of the light conducting plate that satisfy this condition are those other than the neighborhood of either end portion of the linear light source. In the relationship specified above, n is in the range of 1.7 - 3.5 and a is a proportionality constant which varies with the thickness of the light conducting plate and the size of the light emitting area. The specific value of a is determined by regression of a mathematical expression in which the percent coverage as defined above range from 1 to 50% in the neighborhood of the light source and from 50 to 100% in the area that is the farthest from the light source.

3) A further requirement for the present invention is that the coverage (Y') with the light scattering material which is coated on the light emitting surface along grid forming lines that are parallel to the axis of the linear light source should increase in such a way as to satisfy the relationship $Y' = a'X'^n$ or $Y' = a'^{x'}$ or the approximate relationship thereof, where X' or x' represents the distance the coating departs from a line vertical to the center of the length of the linear light source towards both ends thereof. In this relationship, n and a' have the same meanings as already defined. The coverage (Y') need not satisfy the above specified relationship for the entire surface of the light conducting plate; rather, the relationship only need be satisfied by the surface of the light conducting plate over a certain range of distance from the linear light source, namely, from the area that is the nearest to the light source and where X' is at maximum (each end portion of the light conducting plate) to the area where Y = Y' with Y' decreasing or increasing gradually and/or is constant with increasing X along both end portions of the plate. This range will vary with the nature of the light scattering material used.

In the second aspect of the present invention, this light diffusing plate is used in more than one unit, typically in two units in superposition. Using two or more light diffusing plates, a back lighting device having satisfactory luminance can be constructed. Each of the light diffusing plates to be used in the present invention may have at least one surface rendered coarser than the other surface by a suitable roughening technique such as embossing, sand blasting or coating with a transparent resin paint containing glass beads, and the so treated plates are superposed in such a way that the coarser side forming the upper (or outer) surface.

Fig. 9 is a diagram showing the relationship between the distance from a light source and luminance for a light conducting plate coated with a light diffusing material in accordance with the second aspect the present invention and for a light conducting plate coated uniformly over its surface with a light diffusing material. Obviously, the former light conducting plate provides a generally uniform luminance distribution across the surface as indicated by curve 1.

Fig. 10 is a diagram showing the profile of luminance distribution vs the distance (x) from a light source, with the percent coverage (y) of a light conducting plate being taken as a parameter. The percent coverage increases in proportion to a power of x. Curves a, b and c in Fig. 10 denote the changes in y for x, $x^{1.7}$ and $x^{3.5}$ and the corresponding luminance distribution profiles are denoted by curves A, B and C, respectively. As one can see Fig. 10, increasing the percent coverage in proportion to a power of x over the range of 1.7 - 3.5 is preferred for the purpose of obtaining a flat luminance distribution.

Fig. 11 is a diagram showing the profile of luminance distribution vs the distance from a light source, with the percent coverage (y) of coating at a start and an end point being taken as a parameter. Curve d in Fig.11 denotes coating with a coverage of 30% at the start point and 50% at the end point, and the corresponding luminance distribution profile is denoted by curve D.

Similarly, curve e denotes coating with a coverage of 50% at the start point and 100% at the end point, and the corresponding luminance distribution profile is denoted by curve E. As one can see from Fig. 11, the coverage is preferably within the range of 30 - 50% for the coating start point and 50 - 100% for the coating end point in order to obtain a flat luminance distribution.

In the third aspect of the present invention, as shown in Fig. 12, a specular reflecting plate 7 is further provided so as to cover the end face of the light conducting plate 1 which is farthest from the linear light source 4. The specular reflecting plate 7 may be made of any material that causes substantially specular reflection of rays of light, as exemplified by silver, aluminum, gold, copper, platinum, nickel and chromium, with silver and aluminum being preferred. The method of forming the specular reflecting plate is not limited in any particular way and it may be formed by hot stamping or evaporation. Alternatively, a separately prepared specular reflecting plate or film may be attached to the light conducting plate.

The backlighting device of the third aspect of the present invention which has its principal part composed in the manner described above is to be used with display panels, particularly with liquid-crystal display panels. In this particular case, the backlighting device of the present invention preferably has the following constitutional features.

1) The light conducting plate to be used in the third aspect of the present invention is preferably such that the percent coverage (Y%) with the light scattering material increases in proportion to a power of the distance (Xmm) from the linear light source along grid forming line, with the power ranging from 1.7 to 3.5. That is, the percent coverage (Y%) should satisfy the relationship $Y = aX^n$, where n is between 1.7 and 3.5, and a generally represent a proportionality factor and preferably is larger than 0 but not larger than 2 ($0<a\leq 2$). It should be noted that the coverage (Y%) need not surely satisfy the above specified relationship, rather, it is possible to use the coverage which satisfies a relationship closely resembling to the specified relationship.

2) The percent coverage (Y%) increases with the distance (Xmm) from the linear light source along glid forming line, such that it is proportional to a proportionality factor a raised to a power the distance (Xmm), such as $Y = a^x$, where the factor a is larger than 1 but not larger than 2 ($1<a\leq 2$). It should be noted that the coverage (Y%) need not surely satisfy the above specified relationship, rather, it is possible to use the coverage which satisfies a relationship closely resembling to the specified relationship.

3) A further requirement for the third aspect of the present invention is that the coverage (Y'%) with the light scattering material which is coated on the light emitting surface along grid forming line that are parallel to the axis of the linear light source should increase gradually with increasing the distance (X'mm) which represents the distance the coating departs from a line vertical to the center of the length of the liner light source towards both ends thereof.

The back lighting device of the present invention is used in practice with an optical display panel such as a liquid-crystal panel being positioned on top of the light diffusing plates.

The back lighting device of the present invention is comparatively small in size and yet produces a uniform luminance distribution at high luminance levels.

[Examples and Comparative Examples]

Comparative examples and an example of the present invention are described below in order to further illustrate the invention.

Examples of the first aspect of the present invention are first described. A rectangular light conducting plate (250 mm x 150 mm) having a thickness of 3 mm (see Fig. 1) was provided. A cold cathode fluorescent tube (a normal tube of Harrison Denki K.K.) with a diameter of 5.8 mm that had the same length as that of the short side of the plate was positioned in contact with one of its shorter sides. The fluorescent tube was enclosed with a cylindrical aluminum reflector coated with a special resin paint to provide a diffuse reflectance of at least 85%. The clearance between the fluorescent tube and the reflector was 1 mm and the reflector had a slit 3 mm wide in the surface in contact with the light conducting plate in such a way that light emerging through the slit would be admitted into the plate from one shorter side.

In the embodiments of the first aspect of the present invention, a polyester sheet 100 μm thick having a light diffusing capability on both sides was used as a light diffusing plate.

A light diffusing material was applied over the surface of the light conducting plate by screen-printing a pattern of circular dots as shown in Fig. 3. A screen-printing image carrier was prepared by CAD in such a way that the coverage with the light diffusing material would be 3% at the point for a minimum value of x (near point a in Fig. 3) and 70% at the point for a maximum value of X (near point d in Fig. 3), with the coverage being proportional to X^2 in the intermediate area. In the direction of X' which was parallel to the linear light source, the dot pattern was designed in such a way that the coverage of the area from X = 0 to point b which was substantially the center of the light conducting plate along its length would vary in proportion to the cube of X' with reference values being taken at X, = 0 (points between a and b) and X' = max (points between c and b').

The coverage at point c in Fig. 3 may be properly selected from the range of 1 - 50% depending on the thickness of the light conducting plate, its size and the type of the cold-cathode. In the case under discussion, the coverage at point c was set at 8%.

The surface luminance distribution as produced when the cold-cathode tube was driven with an ac voltage (30 kHz) being applied from an inventor was measured with a luminance meter (Topcon BM-8) and graphed in Fig. 4 (Example 1), from which one can see that the back lighting device of Example 1 was a surface light source having a very flat luminance distribution profile.

A back lighting device of the first aspect of the present invention was constructed and operated under the same conditions as described above except that the cold-cathode tube was light-shielded at both ends ca. 13 mm long by coating with a black paint. The results of measurement of luminance distribution are shown in Fig. 5 (Example 2). Obviously, there were no significant differences between the two comparative examples and the luminance distribution did not change as a result of driving under the same conditions as would cause time-dependent deterioration of the cold-cathode tube.

Another back lighting device was constructed and operated under the same conditions as used in Example 1 except that the clearance between the cold-cathode fluorescent tube and the cylindrical aluminum reflector was reduced to 0.3 mm. The results of measurement of luminance distribution are shown in Fig. 6 (Comparative Example 1). Differences in luminance were observed in the X' direction in areas near the cold-cathode tube. Further, there was observed an overall decrease in the absolute values of luminance.

Yet another back lighting device was constructed and operated under the same conditions as used in Example 1 except that the light-diffusing material was coated in a dot pattern, with the distribution of dots being uniform in the Y' direction. The results of measurement of luminance distribution are shown in Fig. 7 (Comparative Example 2). Dark fringes were observed in areas near the cold-cathode tube.

A back lighting device of the second aspect of the present invention was constructed and operated under the same conditions as used in Example 1 except that the light-diffusing plate was replaced by two polycarbonate sheets 200 μm thick, each having a coarser surface on one side than the other, that were superposed in such a way that the coarser side would form the upper surface through which light was to be emitted (as indicated by 2 in Fig. 1). The results of measurement of luminance distribution (Example 3) were substantially the same as those obtained in Example 1 in terms of the profile of luminance distribution but the absolute values of luminance were higher.

The graphs of luminance distribution shown in Figs. 4 - 7 were constructed by plotting with a computer the values of luminance that were measured at 60 points on the light conducting plate as shown in Fig. 8. The points at which two straight lines cross at right angles indicate the mean for the 60 points and the points connected by two zigzag lines indicate deviations from the mean value.

The maximum, minimum and mean values of luminance (Cd/cm^2) for each example are shown below.

	Max	Min	Mean
Example 1	182	175	178
Example 2	181	174	178
Example 3	205	197	201
Comparative Example 1	178	135	161
Comparative Example 2	240	143	171

A comparative example and two examples of the third aspect of the present invention are described below in order to further illustrate the invention.

A comparative example is first described. A rectangular light conducting plate (225 mm x 127 mm) having a thickness of 2 mm was provided. A cold-cathode fluorescent tube (a normal tube of Harrison Denki K.K.) with a diameter of 4.8 mm that was 7 mm longer than the shorter side of the plate was positioned in contact with one of its shorter sides. The fluorescent tube was enclosed with a cylindrical aluminum reflector having a slit 2 mm wide in contact with the light conducting plate in such a way that light emerging through the slit would be admitted into the plate from one shorter side.

A light diffusing material was applied over the surface of the light conducting plate by screen-printing a pattern of circular dots. A screen-image carrier was prepared by CAD in such a way that the coverage with the light diffusing material would be 6% at the point for a minimum value of X (near point a in Fig. 13) and 80% at the point for a maximum value of X (near point d in Fig. 13), with the coverage being proportional to X^2 in the intermediate area.

In the direction of X' which was parallel to the linear light source, the dot pattern was designed in such

a way that the coverage of the area from X = 0 to point b which was substantially the center of the light conducting plate along its length would vary in proportion to the cube of X' with reference values being taken at X' = 0 (points between a and b) and X' = max (points between c and b'). The coverage at point c in Fig. 13 may be properly selected from the range of 1 - 50% depending on the thickness of the light conducting plate, its size and the type of the cold-cathode tube. In the case under discussion, the coverage at point c was set at 10%.

The end face of the light conducting plate which was the farthest from the cold-cathode tube was covered with a light diffusing/reflecting film (MTN-W200 of Tsujimoto Denki Seisakusho K.K.) as indicated by e in Fig. 13.

The surface luminance as produced when the cold-cathode tube was driven with an ac voltage (30 kHz) being applied from an invertor was measured with a luminance meter (Topcon BM-8) and the results are shown in Fig. 14 by curve a (comparative example 3), from which one can see that the back lighting device of the comparative example produced an uneven luminance distribution at the farthest end portion of the light conducting plate.

A light backing device of a third aspect of the present invention was constructed in the same way as in the comparative example except that the reflecting plate (indicated by e in Fig. 13) was replaced by a specular reflecting film (a silver-coated high-reflectance film of Nakai Kabushiki Kaisha) and the results of luminance measurement are shown in Fig. 14 by curve b (Example 4).

Another light backing device of the third aspect of the present invention was constructed in the same way as in Example 1 except that the coverage of the light conducting plate with the light diffusing material was 80% in an area in the neighborhood of the end face of the plate where the specular reflecting film was provided and the width of which area was approximately 1/10 of the length of the plate (as indicated by point d' in Fig. 13). The results of luminance measurement are shown in Fig. 14 by curve c (Example 5).

The luminance distribution graph in Fig. 4 plots the luminance measured at various points on the light conducting plate in the x-direction shown in Fig. 5. The maximum and minimum values of luminance for each sample are shown below.

	Max.	Min.
Comparative Example 3	252	140
Example 4	162	140
Example 5	160	140

An improved backlighting device for liquid-crystal display panels comprising a linear light source the length of which is equal to or less than the length of an end portion of a light conducting plate at which light is admitted from the linear light source placed adjacent to it, the linear light source being enclosed with a light diffusing reflector that has a slit formed in the surface through which incident light is admitted into the light conducting plate and which is provided in such a way as to form a clearance from the surface of the linear light source, one major surface of the light conducting plate being partially covered with a light diffusing material under specified conditions that has a higher refractive index than the material of which the light conducting plate is made, the major surface being further covered with a specular or light diffusing/reflecting plate, with a plurality of light diffusing plates being provided on the other major (light emerging) surface of the light conducting plate.

Claims

1. A back lighting device for a liquid-crystal panel which comprises:
   a light conducting plate made of a light-transmissive material;
   a linear light source provided at the end portion of at least one side of said light conducting plate, at least the portion of said linear light source which is capable of uniform light emission being equal to or less than the length of said end portion, said linear light source being enclosed with a light diffusing reflector that has a slit through which light emitted from said linear light source is admitted into one side of the light conducting plate and that is provided in such a way a clearance is left between the

outer surface of the linear light source and the opposing inner surface of said reflector;

a coating of a light diffusing material that has a higher refractive index than said light-transmissive material and that is provided in a dot pattern on one major surface of said light conducting plate in such a way as to provide an area in which the coverage (Y) of said coating satisfies the functional relationship $Y = aX^n$ or $Y = a^x$ or the approximate relationship thereof where x or x represents the distance from the linear light source; n = 1.7 - 3.5; and a is a constant determined by regression of a mathematical expression) and in such a way that the coverage (Y') of said coating which is provided on said major surface of the light conducting plate in an increasing amount towards both ends of a line parallel to the axis of said inear light source satisfies the functional relationship $Y' = a'X'^n$ or $Y' = a'^{X'}$ or the approximate relationship thereof (where X' or x' represents the distance the coating departs from a line vertical to the center of the linear light source towards both ends thereof; n = 1.7 - 3.5; and a' is a constant determined by regression of a mathematical expression) over the range from the area that is the nearest to the linear light source and where X' is at maximum (each end of the light conducting plate) to the area where Y = Y' with Y' decreasing or increasing gradually, and/or is constant with increasing X along said both ends of the light conducting plate;

a specular or light diffusing/replacing plate that covers said coated surface; and

at least one light scattering plate provided on the other major (light emerging) surface of said light conducting plate.

2. A back lightening device for a liquid-crystal panel according to claim 1 further comprising:

a specular reflecting member that covers the end face of said light conducting plate which is the farthest from said linear light source.

3. A back lightening device for a liquid-crystal panel comprising:

a light conducting plate made of a light-transmissive material;

a linear light source provided in close proximity to the end portion of at least one side of said light conducting plate;

a coating of a light diffusing material that has a higher refractive index than said light-transmissive material and that is provided on one surface of said light conducting plate in such a way that the coverage of said coating increases with the distance from the linear light source;

a specular reflecting plate or a light diffusing/reflecting plate that covers said one surface; and

a plurality of light scattering plates provided on the other (light emerging) surface of said light conducting plate.

4. A back lightening device for a liquid-crystal panel according to claim 3 further comprising:

a specular reflecting member that covers the end face of said light conducting plate which is the farthest from said linear light source.

5. A back lighting device for a liquid-crystal panel according to claim 3, in which the coverage of the light conducting plate with said light diffusing material increases in proportion to a power of the distance from the linear light source, said power being in the range of 1.7 - 3.5 or with the approximate relationship thereof.

6. A back lighting device for a liquid-crystal panel according to claim 3, in which at least the portion of said linear light source which is capable of uniform light emission is equal to or less than the length of said end portion, and said linear light source is enclosed with a light diffusing reflector that has a slit through which light emitted from said linear light source is admitted into one side of the light conducting plate and that is provided in such a way a clearance is left between the outer surface of the linear light source and the opposing inner surface of said reflector.

7. A back lighting device for a liquid-crystal panel according to claim 6, in which said coating of a light diffusing material is provided in a dot pattern on said one surface of said light conducting plate in such a way as to provide an area in which the coverage (Y) of said coating satisfies the functional relationship $Y = aX^n$ or $Y = a^x$ or the approximate relationship thereof (where X or x represents the distance from the linear light source; n = 1.7 - 3.5; and a is a constant determined by regression of a mathematical expression) and in such a way that the coverage (Y') of said coating which is provided on said surface of the light conducting plate in an increasing amount towards both ends of a line parallel to the axis of said linear light source satisfies the functional relationship $Y' = a'X'^n$ or $Y' = a'^{X'}$ or the

approximate relationship thereof (where X' or x' represents the distance the coating departs from a line vertical to the center of the linear light source towards both ends thereof; n = 1.7 - 3.5; and a' is a constant determined by regression of a mathematical expression) over the range from the area that is the nearest to the linear light source and where X' is at maximum (each end of the light conducting plate) to the area where Y = Y' with Y' decreasing or increasing gradually and/or is constant with increasing X along said both ends of the light conducting plate.

8. A back lighting device for a liquid-crystal panel which comprises:

a light conducting plate made of a light-transmissive material;

a linear light source provided in close proximity to the end portion of one side of said light conducting plate;

a first coating of a light diffusing material that has a higher refractive index than said light-transmissive material and that is provided on one major surface of said light conducting plate in such a way that the coverage of said first coating increases with the distance from the end portion of said one side of said light conducting plate which faces said linear light source; and

a specular reflecting member that covers the end face of said light conducting plate which is the farthest from said linear light source.

9. A back lighting device for a liquid-crystal panel according to claim 8 further comprises:

a second coating of a light diffusing material that has a higher refractive index than said light-transmissive material and that is provided on one major surface of said light conducting plate in such a way that the neighborhood of the end portion of said light conducting plate which is the farthest from said linear light source has an area in which the coverage of said second coating is equal to that in the other areas or an area in which the coverage of said coating is greater than that in the other areas but in which the rate of increase of said coverage is smaller than that in the other areas.

10. A back lightening device for a liquid-crystal panel according to claim 8 further comprising:

a specular or light diffusing/replacing plate that covers said coated surface; and

at least one light scattering plate provided on the other major (light emerging) surface of said light conducting plate.

11. A back lighting device for a liquid-crystal panel according to claim 8, in which the coverage of said first coating of the light conducting plate with said light diffusing material increases in proportion to a power of the distance from the linear light source, said power being in the range of 1.7 - 3.5.

12. A back lighting device for a liquid-crystal panel according to claim 8, in which at least the portion of said linear light source which is capable of uniform light emission is equal to or less than the length of said end portion, and said linear light source is enclosed with a light diffusing reflector that has a slit through which light emitted from said linear light source is admitted into one side of the light conducting plate and that is provided in such a way a clearance is left between the outer surface of the linear light source and the opposing inner surface of said reflector.

13. A back lighting device for a liquid-crystal panel according to claim 12, in which said coating of a light diffusing material is provided in a dot pattern on said one surface of said light conducting plate in such a way as to provide an area in which the coverage (Y) of said coating satisfies the functional relationship $Y = aX^n$ or $Y = a^x$ or the approximate relationship (where X or x represents the distance from the linear light source; n = 1.7 - 3.5; and a is a constant determined by regression of a mathematical expression).

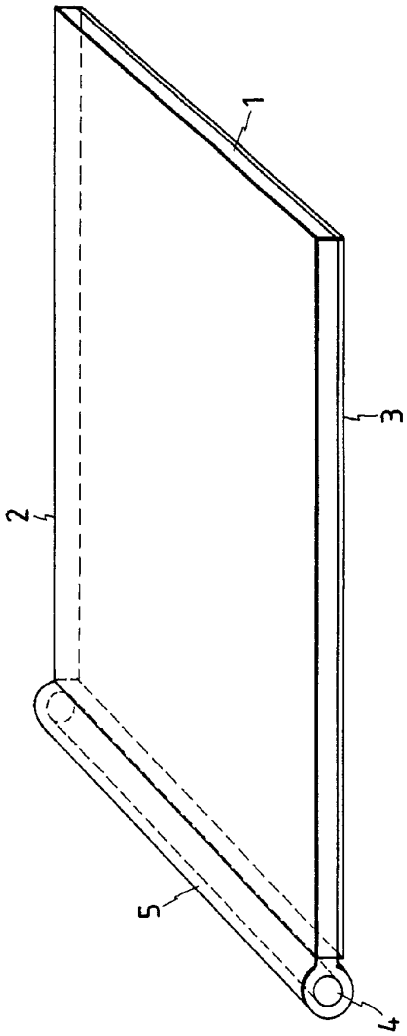

FIG. 1

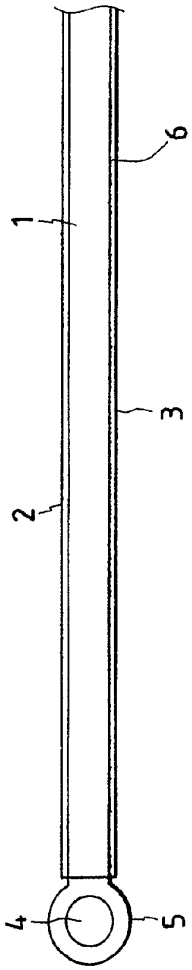

FIG. 2

FIG. 3

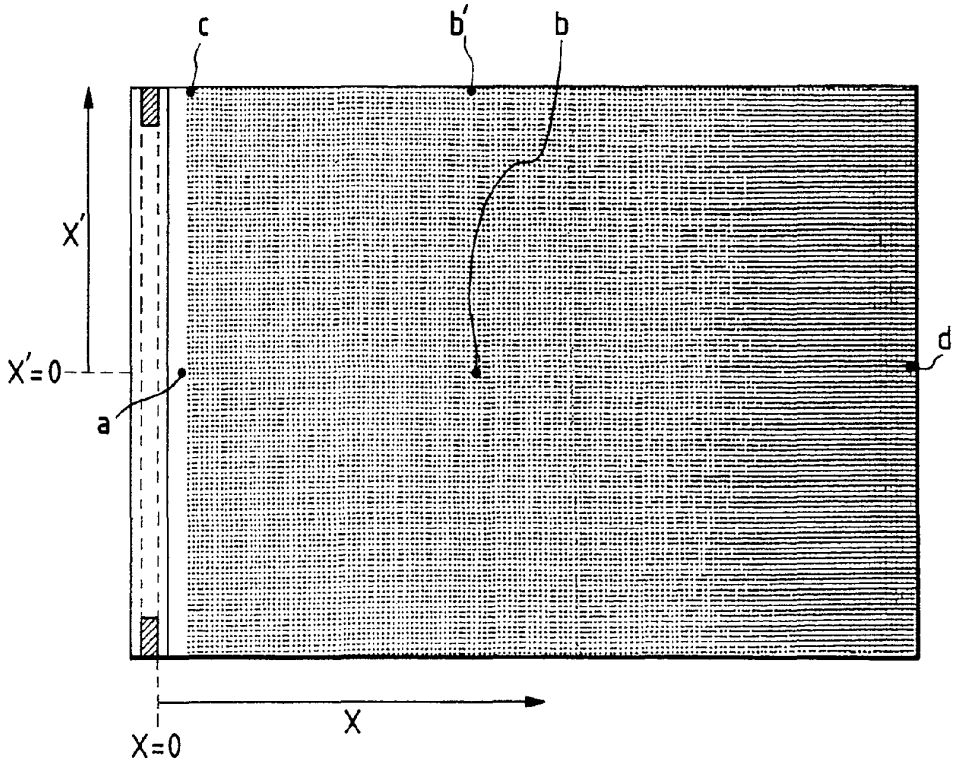

FIG. 4

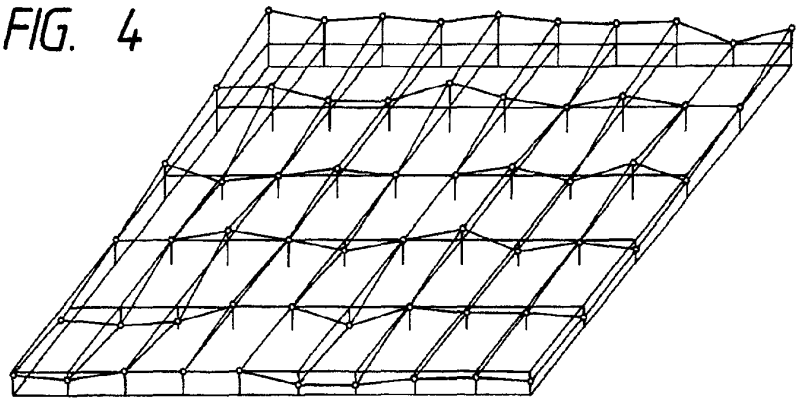

FIG. 5

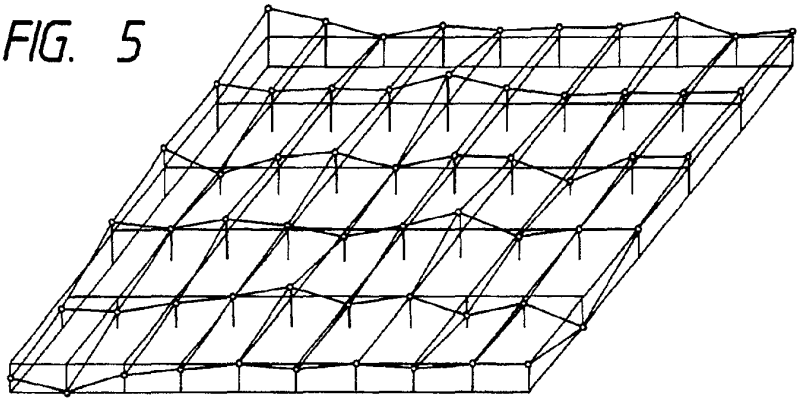

FIG. 6

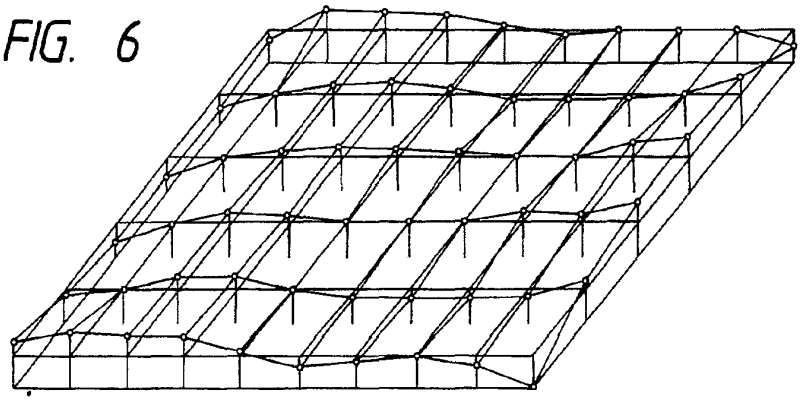

FIG. 7

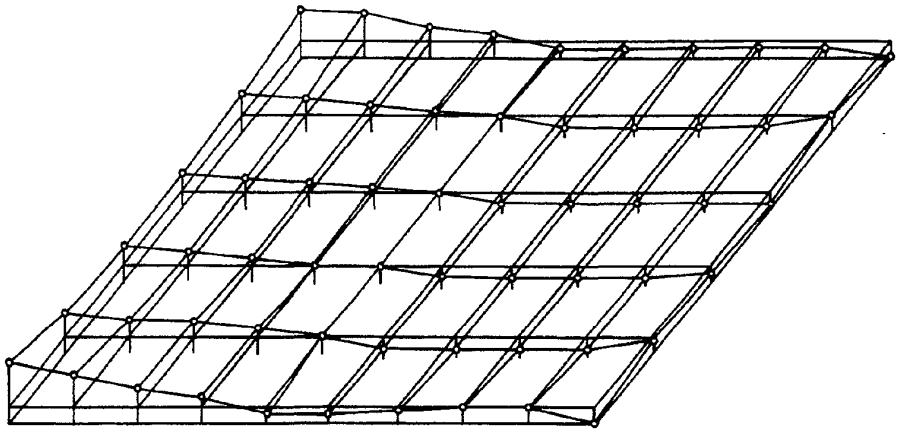

FIG. 8

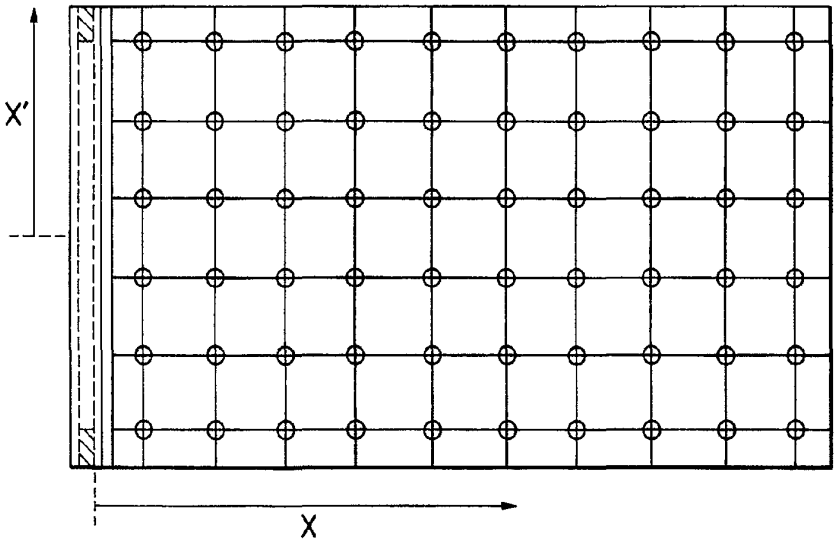

FIG. 9

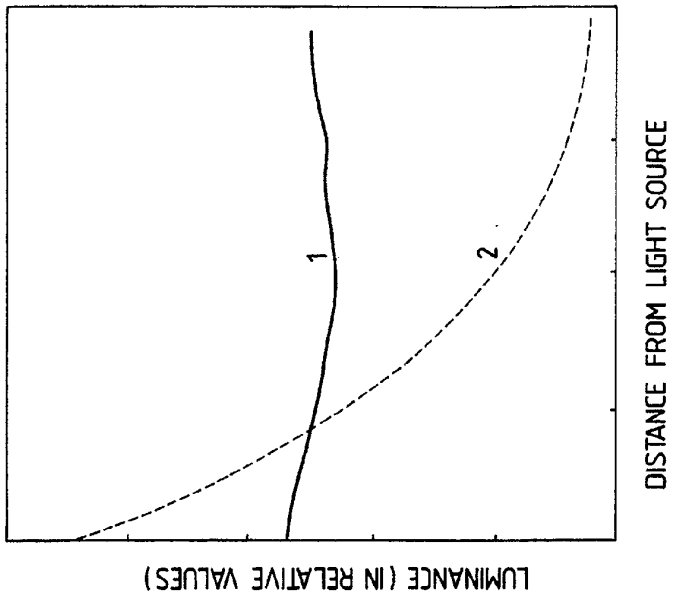
LUMINANCE (IN RELATIVE VALUES)
1
2
DISTANCE FROM LIGHT SOURCE

FIG. 10

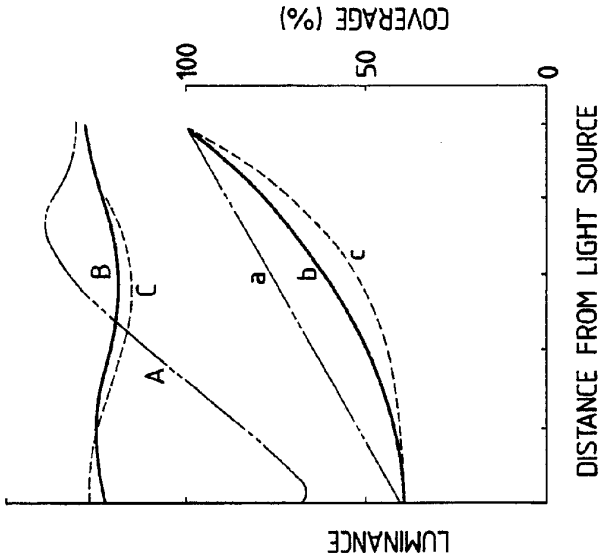
LUMINANCE
A
B
C
a
b
c
COVERAGE (%)
100
50
0
DISTANCE FROM LIGHT SOURCE

FIG. 11

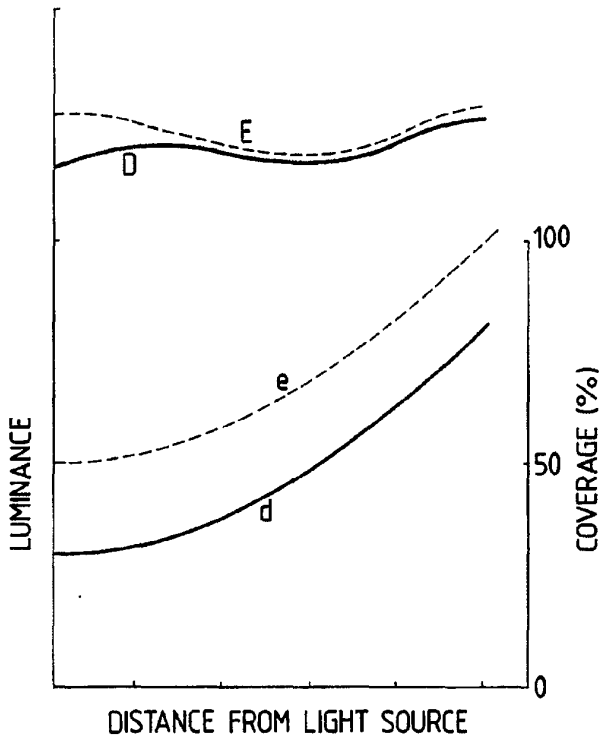
E
D
100
e
d
50
0
LUMINANCE
COVERAGE (%)
DISTANCE FROM LIGHT SOURCE

FIG. 12

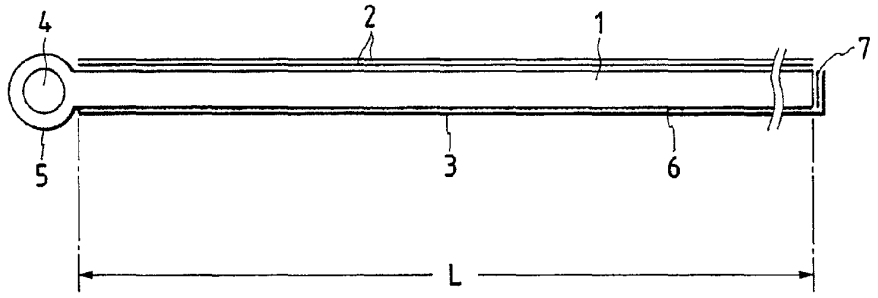
4
2
1
7
5
3
6
L

FIG. 13

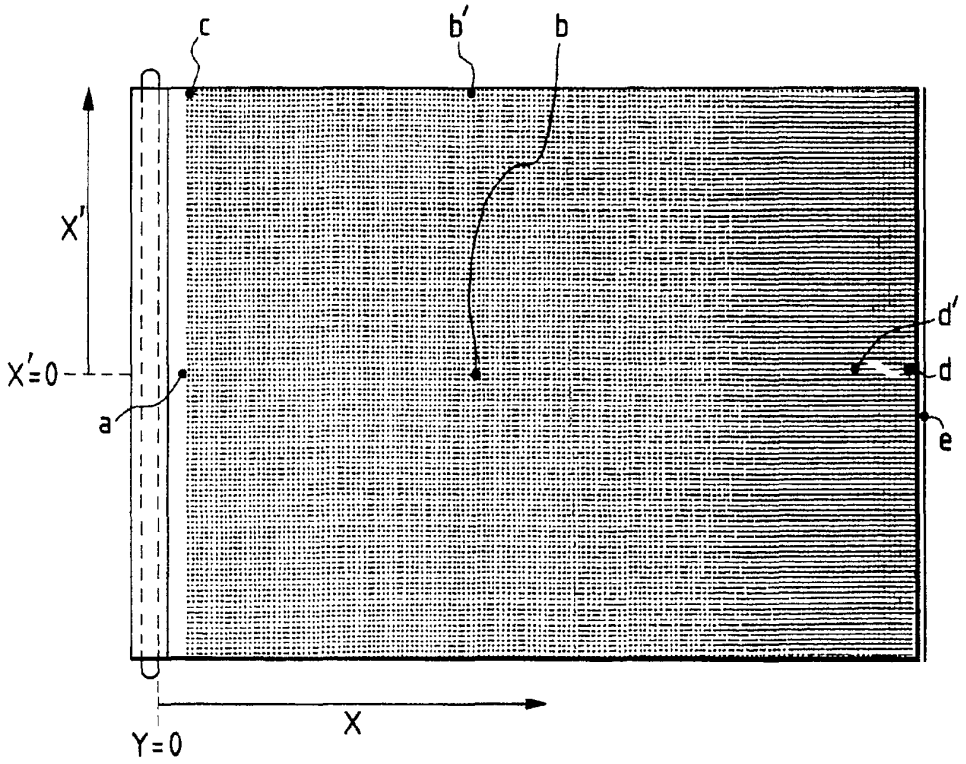

FIG. 14

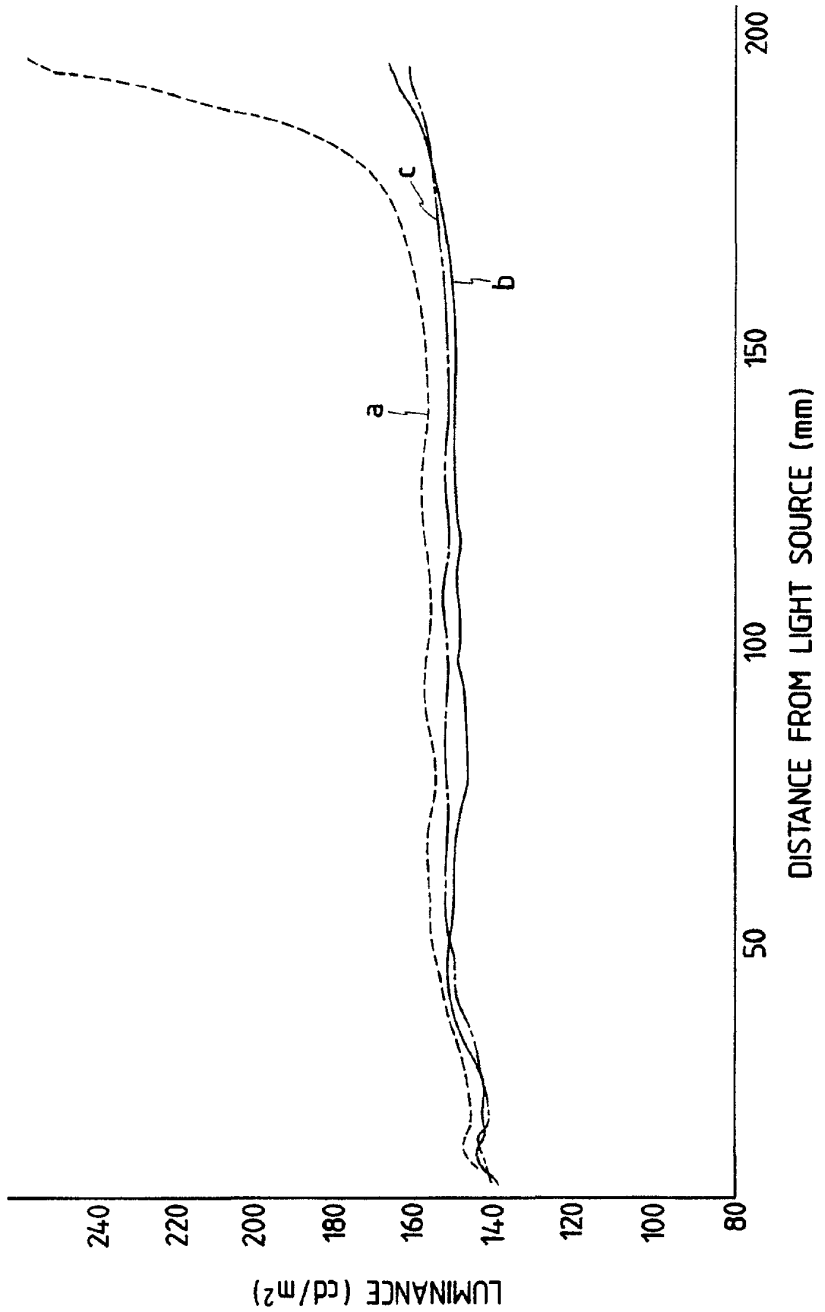
LUMINANCE (cd/m2)
240
220
200
180
160
140
120
100
80
50
100
150
200
DISTANCE FROM LIGHT SOURCE (mm)
a
b
c

(19) Europäisches Patentamt
European Patent Office
Office européen des brevets

(11) Publication number: **0 531 939 A1**

(12) EUROPEAN PATENT APPLICATION

(21) Application number: **92115346.6**

(51) Int. Cl.[5]: **G09F 13/16**, G09F 13/04

(22) Date of filing: **08.09.92**

(30) Priority: **09.09.91 JP 80357/91 U**
28.11.91 JP 105342/91 U
29.07.92 JP 58421/92 U

(43) Date of publication of application:
17.03.93 Bulletin 93/11

(84) Designated Contracting States:
DE FR GB IT NL

(71) Applicant: **ENPLAS CORPORATION**
2-30-1, Namiki
Kawaguchu-shi, Saitama-ken(JP)

(72) Inventor: **Yokoyama,Kazuaki**
854-8,Ohmaki
Urawa-shi, Saitama-ken(JP)
Inventor: **Ishikawa,Tsuyoshi**
4-20-22,Shimosyakujii
Nerima-ku, Tokyo-to(JP)

(74) Representative: **Prechtel, Jörg, Dipl.-Phys. Dr. et al**
Patentanwälte H. Weickmann, Dr. K. Fincke
F.A. Weickmann, B. Huber Dr. H. Liska, Dr. J. Prechtel, Dr. B. Böhm, Kopernikusstrasse 9
Postfach 86 08 20
W-8000 München 86 (DE)

(54) Surface light source device.

(57) A surface light source device comprising at least one light source (1), a transparent panel (2), a diffusing panel (3) and a reflecting surface (4). This surface light source device is configured so that brightness is enhanced in a direction perpendicular to the diffusing panel (3) by disposing, on the side of a front surface of the transparent panel (2), a transparent sheet (6) which has protrusions (6a) having a saw-tooth-like sectional shape formed on one surface thereof.

FIG. 4

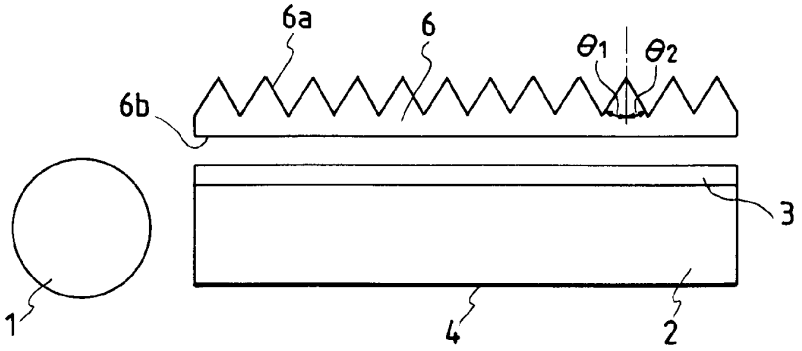

EP 0 531 939 A1

Background of the Invention

a) Field of the invention:

The present invention relates to a surface light source device which is to be used as a back light for liquid crystal display units, and more specifically to a surface light source device which uses a transparent panel member or a reflecting panel member.

b) Description of the prior art:

The conventional surface light source device which uses a transparent panel has a composition as illustrated in Fig. 1. In this drawing, the reference numeral 1 represents a light source, the reference numeral 2 designates a transparent panel, the reference numeral 3 denotes a diffusing panel and the reference numeral 4 represents a reflecting surface. The light source 1 used in this surface light source device is a linear light source which is, for example, a cold cathod ray tube and extends in the direction perpendicular to the paper surface. The transparent panel 2 is made of a glass material or a transparent plastic material. As a material for the transparent panel 1, it is general to select a plastic material such as acrylic resin which is light in weight thereof and available at a low cost. The transparent panel 2 has a form of a plane parallel plate which has thickness of t and a rectangular or square surface. A light beam emitted from the linear light source 1 enters through an end surface of incidence 2a into the transparent panel 2 and travels through the transparent panel 2 as represented by a ray 10 in Fig. 1. During this travel, portions of the light beam emerge from the transparent panel 2 (upward in Fig. 1) and pass through the diffusing panel 3 to produce diffused rays. The surface light source device produces the diffused rays which are diverging from various points on the surface of the diffusing panel (the upper surface shown in Fig. 1) as described above. The ray 10 shown in Fig. 1 is diverged from a point A on the diffusing panel 3. In a case where the diffusing panel 3 should not be used, a ray which travels in a direction having an angle of γ indicated by an arrow has the highest brightness. The angle γ has a value which is different dependently on refractive indices of materials selected for the transparent panel 2. Experiments effected by selecting an acrylic resin having a refractive index of 1.49 indicated results that the angle γ has a value of approximately 75°. When the diffusing panel 3 is placed over the transparent panel 2 so that rays having passed through the diffusing panel 3 are diffused, deflection of the rays is corrected a little due to the diffusion of the rays, but brightness in the direction perpendicular to the transparent panel is not enhanced so remarkably. When a liquid crystal display panel, for example, is illuminated by using the surface light source device which uses the diffusing panel 3 placed over the transparent panel 2, brightness of the diffused rays is low in a direction for observation, i.e., in a direction having the angle $\gamma = 0°$, whereas brightness of the diffused rays is the highest in an oblique direction having an angle $\gamma \fallingdotseq 75°$ which is deviated from the direction for observation. Accordingly, an observer of the liquid crystal display panel is undesirably obliged to observe an image which is relatively dark.

As another conventional example of the surface light source device which uses the transparent panel, there is also known the surface light source device illustrated in Fig. 2. In this conventional example, two linear light sources 1, 1 are disposed beside both end surfaces of a transparent panel 5. The two light sources 1, 1 are adopted for obtaining a surface light source device which can provide diffused rays having higher brightness.

Further, the transparent panel 5 of the surface light source device illustrated in Fig. 2 has a thinned central portion (the portion farthest from the light sources disposed on the right and left sides) and a top surface 5b which is inclined.

The surface light source device illustrated in Fig. 2 is configured so that light beams emitted from the right side and left side light sources 1, 1 enter through end surfaces of incidence 7a, 7a of the transparent panel 7, and emerge out of a diffusing panel 3 so as to produce diffused rays. In case of the surface light source device which uses the inclined top surface 7b, rays emerging from the transparent panel 7, for example rays 10 and 11, have the highest brightness at an inclination angle which is a little smaller, or the angle γ has a value of approximately 60°. However, the surface light source device illustrated in Fig. 2 cannot provide the diffused rays which have sufficient brightness in the direction for observation and obliges to observe relatively dark images.

In addition, there are known transparent panels each of which has thickness progressively thinned along a curve from an end surface of incidence as well as those each of which has thickness progressively thinned along curves from a plurality of end surfaces of incidence. There are also known transparent panels each of which is combined with a plurality of light sources and has uniform thickness.

Summary of the Invention

A primary object of the present invention is to provide a surface light source device which comprises at least one light source, a transparent panel

EX1003, Page 725

having at least one end surface of incidence disposed in the vicinity of the light source, two diffusing panels disposed on a top surface of the transparent panel with a space reserved the diffusing panels, and a reflecting surface disposed on a rear surface of the transparent panel.

Another object of the present invention is to provide a surface light source device which comprises at least one light source, a transparent panel having at least one end surface of incidence disposed in the vicinity of the light source, a diffusing panel disposed on a top surface of the transparent panel, a transparent sheet having, on one surface thereof, protrusions which have a saw-tooth-like sectional shape, and a reflecting surface disposed on a rear surface of the transparent panel.

The surface light source device according to the present invention enhances brightness in a direction perpendicular to the diffusing panels or panel by using the two diffusing panels or the transparent sheet having the surface on which saw-tooth-like protrusions are formed as described above.

The transparent sheet may have a form which has a large number of very small conical or pyramidal protrusions formed on one surface. Further, tips or vertices of the conical or pyramidal protrusions may be rounded.

Formed on one surface of the transparent sheet are rows of the protrusions which have the saw-tooth-like sectional shape.

In a particular case where the surface light source device according to the present invention is to be used as a back light for a liquid crystal display panel, it is preferable, for preventing stripe patterns from appearing on a display panel of the liquid crystal display unit, to configure the transparent sheet so that the rows of the top lines of the protrusions are oblique relative to bus lines or sides of a frame of the display panel.

Further, in the case where the transparent sheet has a large number of the conical or pyramidal protrusions, it is desirable that rows of the protrusions are oblique relative to the bus lines or the sides of the frame of the liquid crystal display panel as in the case described above.

Brief Description of the Drawings

Fig. 1 shows a sectional view illustrating a composition of the conventional surface light source device;

Fig. 2 shows a sectional view illustrating a composition of a different type of the conventional surface light source device;

Fig. 3 through Fig. 8 show sectional views illustrating compositions of first through sixth embodiments of the surface light source device according to the present invention;

Fig. 9 shows a perspective view of a transparent panel which is tinned at a central portion thereof for use in a surface light source device equipped with four light sources disposed besides the four sides of the transparent panel;

Fig. 10 shows a plan view of a transparent panel which is to be used in the surface light source device according to the present invention;

Fig. 11 shows a perspective view of the transparent sheet shown in Fig. 10.

Fig. 12 shows a schematic sectional view illustrating an overall configuration of a combination liquid crystal display panel and the surface light source device according to the present invention used as a back light for the liquid crystal display panel;

Fig. 13 shows a plan view illustrating the transparent sheet which has oblique rows of the top lines of protrusions which has a saw-tooth-like sectional shape;

Fig. 14 shows a perspective view of the transparent sheet which has oblique rows of vertices of conical protrusions;

Fig. 15 shows a sectional view illustrating an example of a surface light source device wherein the transparent panel shown in Fig. 12 is utilized in a surface light source device of the type using a reflecting panel; and

Fig. 16 shows a sectional view of a part of another transparent sheet.

Detailed Description of the Preferred Embodiments

The first embodiment of the surface light source device according to the present invention is illustrated in Fig. 3, wherein the reference numeral 1 represents a light source, the reference numeral 2 designates a transparent panel, the reference numeral 3 denotes a diffusing panel and the reference numeral 4 represents a reflecting panel. The first embodiment of the presnet invention has a composition which is substantially the same as that of the conventional surface light source device illustrated in Fig. 1. The reference numeral 5 represents another diffusing panel which is adopted for enhancing brightness or luminance in the direction for observation (the direction prependicular to the diffusing panels shown in Fig. 3). In other words, the diffusing panel 5 serves for enhancing brightness in the direction for observation by further diffusing rays (or controlling directions of rays) travelling in the direction at the angle of γ shown in Fig. 1 so that a portion of the ray is directed upward (in the direction for observation).

Experiments which were effected for comparing the conventional surface light source device shown in Fig. 1 with the first embodiment of the

EX1003, Page 726

present invention indicated results that brightness in the direction perpendicular to the diffusing panel 3 is approximately 25% higher in case of the first embodiment of the present invention.

Fig. 4 shows the second embodiment of the present invention, wherein the diffusing panel 5 used in the first embodiment is replaced with a transparent sheet 6 having a surface on which protrusions 6a having a sectional shape of saw teeth are formed in rows nearly parallel with one another are formed.

In case of the second embodiment, rays which have emerged from the transparent panel 2 and passed through the diffusing panel 3 become diffused rays, which are refracted so as to be controlled in a direction perpendicular to the diffusing panel 3 by the surface having the saw-tooth-like protrusion 6a formed on the transparent sheet so as to enhance brightness in the direction perpendicular to the diffusing panel 3.

Experiments indicated that the second embodiment enhanced brightness approximately 50% in the direction of $\gamma = 0°$ as compared with the brightness available with the surface light source device illustrated in Fig. 1.

In the second embodiment describe above, it is possible to omit the diffusing panel 3 by designing the surface of the transparent sheet 6 as a coarse surface though the brightness in the direction for observation is not enhanced so much in this case.

In the second embodiment, relationship between θ_1 and θ_2 shown in Fig. 4 may be $\theta_1 = \theta_2$, $\theta_1 < \theta_2$ or $\theta_1 > \theta_2$ for selecting a shape for the saw-tooth-like protrusions.

When θ_1 is largely different from θ_2, however, the saw-teeth-like protrusions will produce an undesirable influence on observation of images in a case of application where the second embodiment is used as a surface light source for illumination. Therefore, it is desirable that θ_1 is equal or nearly equal to θ_2. A transparent panel which has the saw-teeth-like protrusions designed for $\theta_1 = \theta_2$ was used for the experiments which were effected for comparing the conventional surface light source device with the second embodiment of the present invention as described above. The conventional example using the transparent panel made of acrylic resion provided the angle of α which was experimentally confirmed as 74.6° as described above. It is therefore considered that the angle α of the ray 10 shown in Fig. 1 is approximately 40°. Accordingly, it is considered that rays which travel through the transparent panel like the ray 10 shown in Fig. 1 have the maximum intensity. So far as the angle α shown in Fig. 1 is kept unchanged, the angle γ has a value which is smaller as the transparent panel 2 has a smaller refractive index. Consequently, the angle γ has a smaller value and the brightness in the direction perpendicular to the diffusing panel 3 is enhanced as the transparent panel has a smaller refractive index in both the first and second embodiments of the present invention described above. On an assumption of $\alpha = 40°$ it is possible to obtain $\gamma = 68.8°$ as understood from the formula shown below by using polymethylpentene (n = 1.45) as a material for the transparent panel:

$$\sin \gamma = n \sin \alpha$$

The angle γ was approximately 69° in experiments effected by using a surface light source device which had the composition shown in Fig. 1 and used a transparent panel made of polymethylpentene.

In the first and second embodiments described above, usable as materials for the transparent panel are not only acrylic resin and polymethylpentene but also other materials so far as these materials have high transparency and heat resistance. It is preferable to select, among these materials, one which has a low refractive index as a material for the transparent panel.

In the second embodiment described above, the transparent sheet is not limited to the one which has the protrusions which have the saw-tooth-like sectional shape and formed in rows on one surface thereof. For example, the transparent panel may have a large number of minute prism-like protrusions formed on one surface thereof. Further, conical shapes or pyramidal shapes may be selected in place of the prism-like shape.

Fig. 5 shows the third embodiment of the surface light source device according to the present invention wherein a transparent sheet 6 which has protrusions 6a having saw-tooth-like sectional shape are formed on one surface thereof is disposed in the vicinity of a surface (the upper surface in Fig. 5) of the transparent panel and a diffusing panel 3 is disposed outside the transparent sheet 6.

The third embodiment of the present invention has an effect which is similar to that of the second embodiment of the present invention.

Fig. 6 illustrates the fourth embodiment of the surface light source device according to the present invention wherein the concept of the present invention is applied to the conventional surface light source device shown in Fig. 2 so that brightness is enhanced in the direction perpendicular to the diffusing panel. Speaking concretely of the fourth embodiment, light sources 1, 1 are disposed on both sides of a transparent panel 7 which has a thinned central portion, and a transparent sheet 6 which has protrusions 6a having saw-tooth-like sectional shape formed on one surface thereof

EX1003, Page 727

and a diffusing panel 3 are disposed on the side of the surface 7a of the transparent panel as illustrated in Fig. 7.

In the fourth embodiment, light beams emitted from the light sources 1, 1 and entering into the transparent panel 7 are refracted a little upward by the surface 7a which is inclined relative to the bottom surface of the transparent panel 7, refracted further upward by the protrusions formed on the surface having the sawtooth-like protrusions 6a of the transparent sheet 6 and pass through the diffusing panel 3, thereby becoming diffused rays. Accordingly, luminance of the diffused rays is enhanced in the direction C perpendicular to the diffusing panel 3 so as to assure brightness sufficient for observation.

Fig. 7 illustrates the fifth embodiment of the surface light source device according to the present invention which consists of two light sources 1, 1, a transparent panel 7 having a thinned central portion, two transparent sheets 6, 6 which are disposed in contact with a surface 7a of the transparent panel 7 on which protrusions having saw-tooth-like sectional shape are formed, and a diffusing panel 3. Owing to this composition, the fifth embodiment has an effect which is similar to that of the fourth embodiment.

Fig. 8 illustrates the sixth embodiment of the surface light source device according to the present invention wherein a transparent panel 8 has a thinned central portion and an upper surface on which protrusions 8a having saw-tooth-like sectional shape are formed. Speaking detailedly, the sixth embodiment consists of the two light sources 1, 1, the transparent panel 8 having the surface on which the protrusions 8a having the saw-tooth-like sectional shape are formed and a diffusing panel 3. The sixth embodiment can provide an effect similar to those of the other embodiments without using a transparent sheet having the saw-tooth-like protrusions formed on one surface thereof.

Fig. 9 shows a transparent panel which has a thinned central portion and is to be used with the surface light source device equipped with four light sources disposed besides all the four sides of the transparent panel.

The concepts of the fourth through the sixth embodiments shown in Fig. 6 through Fig. 8 respectively are applicable also to the surface light source device using the transparent panel illustrated in Fig. 9.

Each of the second through the fifth embodiments described above adopts the transparent sheet which has protrusions having the saw-tooth-like sectional shape formed on one surface thereof. This transparent sheet has a sectional shape, for example, as the in Fig. 4. A top view (of the transparent panel shown in Fig. 4) is illustrated in Figs. 10 and 11 wherein rows of the top lines 6b of the protrusions having the saw-tooth-like sectional shape (or lows of the vertices of the protrusions having prism-like sectional shape) are arranged in parallel with one another.

Fig. 12 is a schematic sectional view illustrating a combination of a liquid crystal display panel and the surface light source device according to the present invention which is used as a back light for the liquid crystal display panel. In Fig. 12, the reference numeral 20 represents the surface light source device, the reference numeral 21 designates the transparent sheet which has protrusions having the saw-tooth-like sectional shape formed on one surface thereof and the reference numeral 22 denotes the liquid crystal display panel.

When the surface light source device comprising the transparent sheet is used as a back light for the liquid crystal display panel as shown in Fig. 12, observation of images is hindered by stripe patterns which appear on the liquid crystal display panel.

For correcting this defect, it is sufficient to configure the transparent sheet so that the rows of the top lines of the protrusions having the saw-tooth-like sectional shape are obliquely disposed as shown in Fig. 13. In such a case, however, an effect to efface the stripe patterns will not be obtained when the top lines 21a of the protrusions are disposed so as to form a small angle α relative to bus lines or sides of a frame of the liquid crystal display panel. The angle α should desirably be 45°. In place of the above transparent sheet (the transparent sheet as Fig. 13), the transparent sheet as shown in Fig. 14 may be used.

Fig. 15 illustrates a surface light source device which consists of a light source 23, a reflecting panel 24 and a diffusing panel 25, and is configured so that some of light beams emitted from the light source 23 travel directly to the diffusing panel 25, whereas the others of the light beams are reflected by the reflecting panel 24 and then directed toward the diffusing panel 25, whereby distribution of luminance is relatively uniform over the diffusing panel 25. In case of the surface light source device shown in Fig. 13 also, brightness can be enhanced in the direction perpendicular to the diffusing panel 25 by equipping the diffusing panel 25 with the transparent sheet which is adopted in the embodiments of the surface light source device according to the present invention. In the transparent sheet which is used in the present invention (for example, it is shown in Fig. 11, Fig. 14, etc.), the portion between adjoining saw-teeth-like or conical (or pyramidal) protrusions can be curved as shown at D in Fig. 16. And also, in the surface light source device according to the present invention, it is possible to use plural trans-

EX1003, Page 728

parent sheets in layers. In that case, it is preferable to incline the tansparent sheet the nearest to the liquid crystal display panel relative to bus line or sides of a frame of the liquid crystal display panel (for example, 45°) The other transparent sheets don't have to be oblique.

Important aspects of the described invention are as follows:

A surface light source device comprising at least one light source, a transparent panel, a diffusing panel and a reflecting surface. This surface light source device is configured so that brightness is enhanced in a direction perpendicular to the diffusing panel by disposing, on the side of a front surface of the transparent panel, a transparent sheet which has protrusions having a saw-tooth-like sectional shape formed on one surface thereof.

Claims

1. A surface light source device comprising: a transparent panel which is made of a transparent material, rectangular in a surfacial shape therof and uniform in thickness thereof; at least one linear light source which is disposed in the vicinity of at least one side of said tansparent panel; a diffusing panel and a transparent sheet which has protrusions having saw-tooth-like sectional shape formed in rows nearly parallel with one another on one surface thereof, these members being disposed with a space reserved therebetween on the side of a front surface of said transparent panel; and reflecting surface disposed on a rear surface of said transparent panel, wherein top lines of said protrusion which have the saw-tooth-like sectional shape and are formed on said transparent sheet are aranged in rows obliquely directed relative to sides of said transparent panel.

2. A surface light source device according to Claim 1 wherein said transparent sheet is disposed between said transparent panel and said diffusing panel.

3. A surface light source device according to Claim 1 wherein said light source and another light source are disposed beside two sides of asid transparent panel which are opposite to each other, and said transparent panel has thickness which is reduced as portions of said panel are farther from said light sources or a concave surface.

4. A surface light source device according to Claim 1 wherein said transparent panel has a square surface.

5. A surface light source device according to Claim 4 wherein said light sources and three other light sources are disposed beside four sides of said thrasparent panel and said transparent panel has thickness whihc is reduced as portions of said transparent panel are farther from said light sources or a concave surface.

6. A surface light source device according to Claim 4 wherein said light sources and another light source are disposed beside two sides of said tranparent panel and said transparent panel has thickness which is reduced as portions of said transparent panel are farther from said light sources or a concave surface.

7. A surface light source device according to Claim 6 wherein said transparent sheet is disposed in contact with the surface of said transparent panel.

8. A surface light source device according to Claim 1, 2, 3, 4, 5, 6 or 7 wherein said protrusions formed on said transparent sheet have curved tips.

9. A surface light source device comprising: a transparent panel which is made of a transparent material, rectangular in a surfacial shape thereof and uniform in thickness thereof; at least one light source disposed beside at least one side of said tansparent panel; a diffusing panel disposed on the side of a front surface of said tranaparent panel; and a reflecting surface disposd on the side of a rear surface of said transparent panel; wherein protrusions having a saw-tooth-like sectional shape are formed on the front surface of said transparent panel, said protrusions have curved tips.

10. A surface light source device comprising: a transparent panel which is made of a transparent material, rectangular in a surfacial shape thereof and uniform in thickness thereof; at least one light sources disposed in the vicinity of at least one side of said transparent panel; a diffusing plate and a transparent sheet having a large number of minute protrusions formed on a surface thereof which are disposed on the side of a front surface of said transparent panel; and a reflecting surface disposed on the side of a rear surface of said transparent panel, said minute protrusions having curved tips.

11. A surface light source device according to Claim 10 wherein said transparent sheet is disposed between said tansparent panel and said diffusing panel.

12. A surface light source device according to Claim 10 or 11 wherein said protrusions formed on said transparent panel are conical.

13. A surface light source device according to Claim 10 or 11 wherein said protrusions formed on said transparent sheet are pyramidal.

14. A surface light source device according to Claim 10, 11, 12 or 13 wherein said protrusions formed on said transparent sheet are arranged in rows obliquely directed relative to the sides of said transparent panel.

FIG. 1

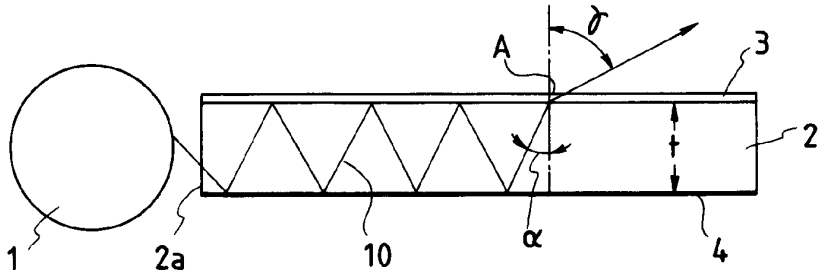

FIG. 2

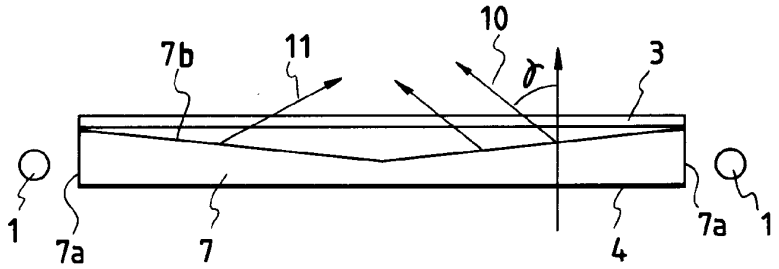

FIG. 3

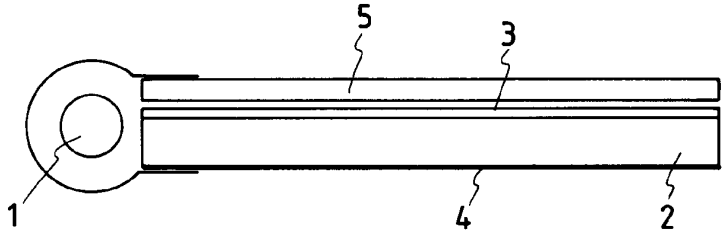

FIG. 4

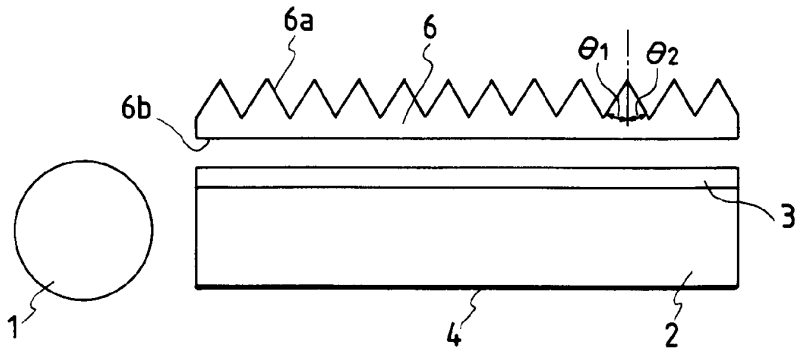

FIG. 5

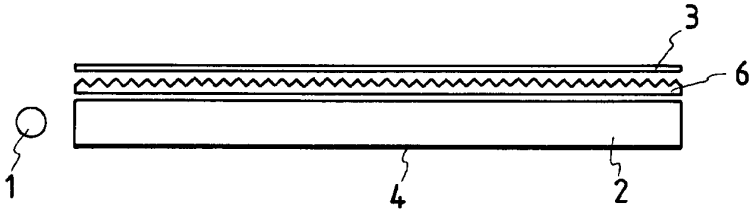

FIG. 6

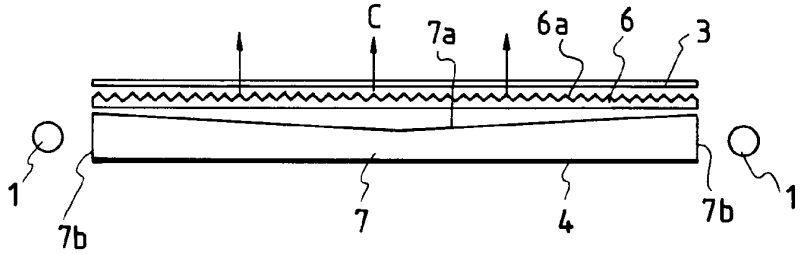

FIG. 7

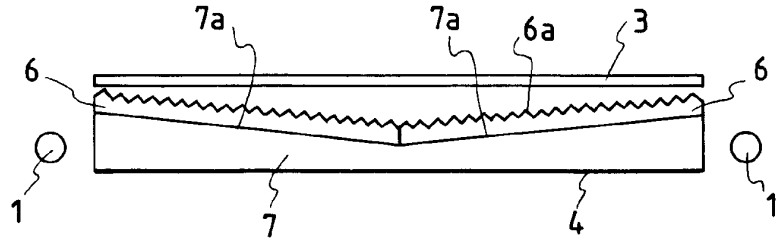

FIG. 8

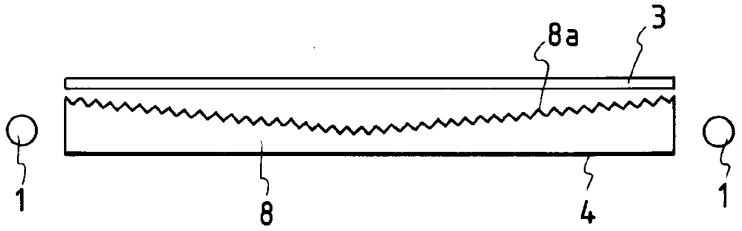

FIG. 9

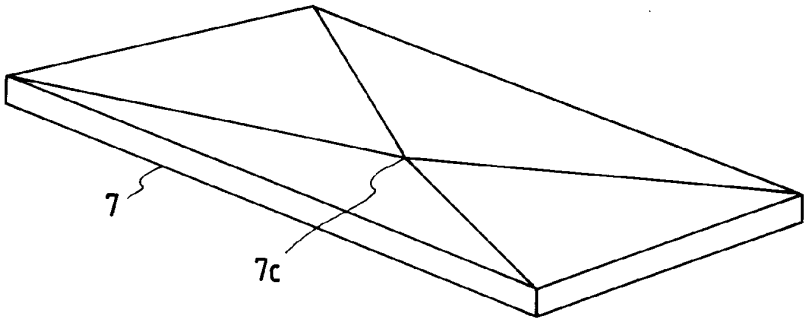

FIG. 10

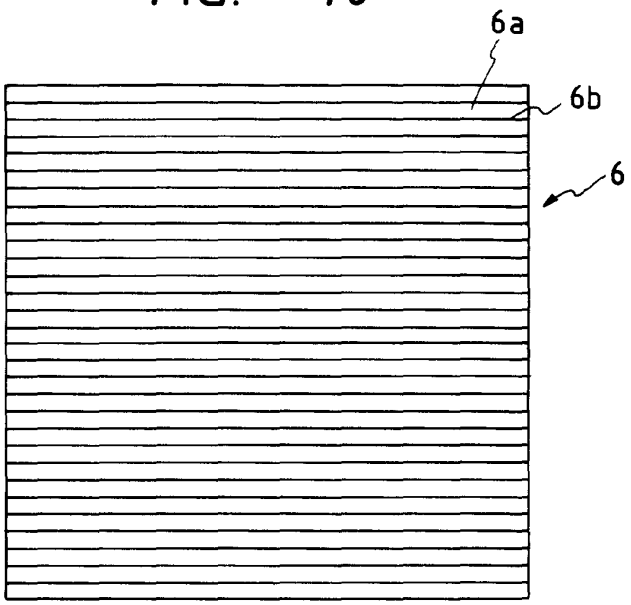

FIG. 11

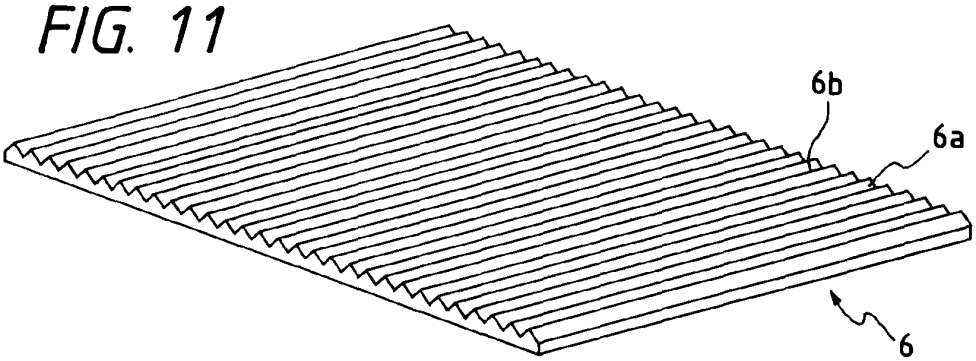

FIG. 12

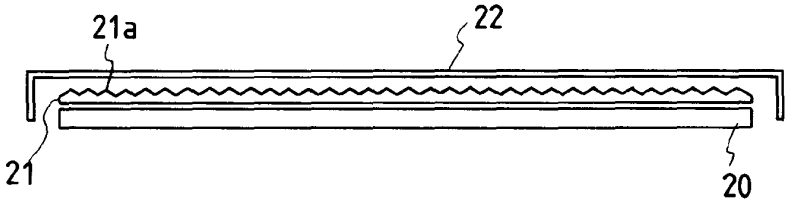

FIG. 13

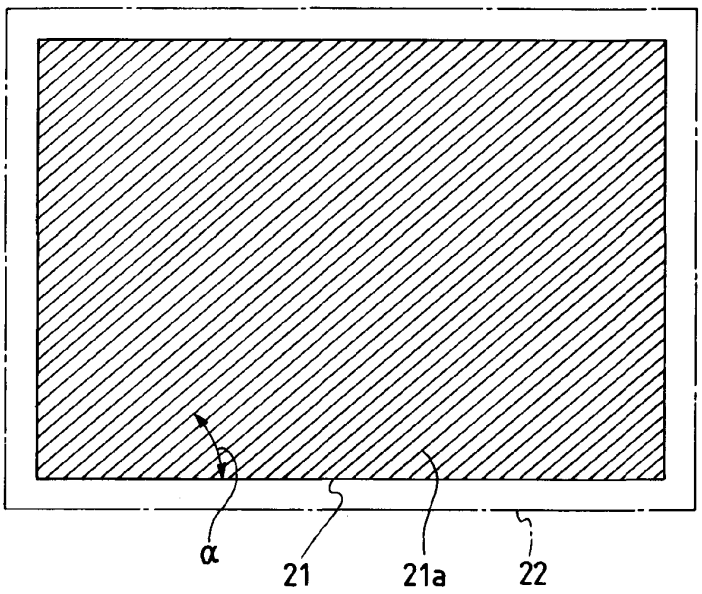

FIG. 14

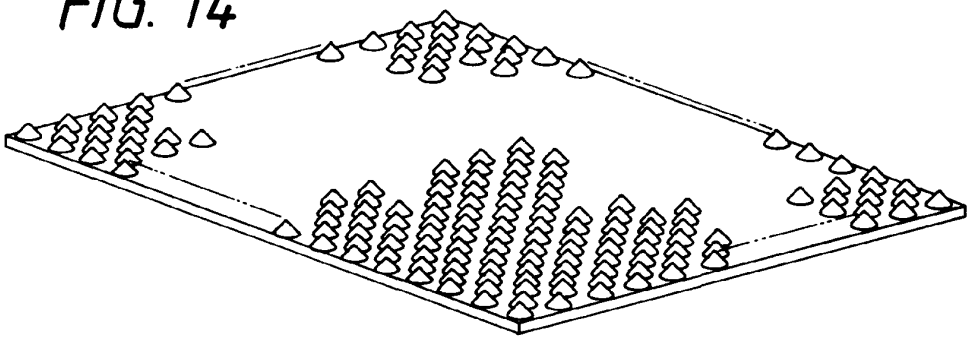

FIG. 15

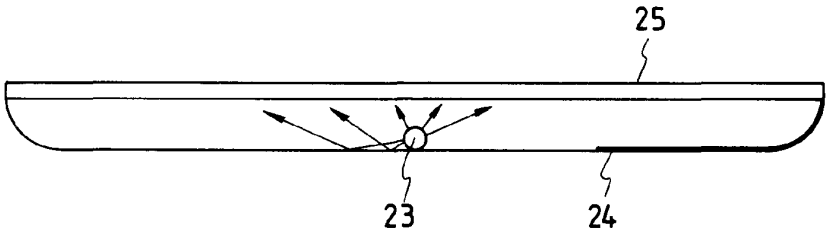

FIG. 16

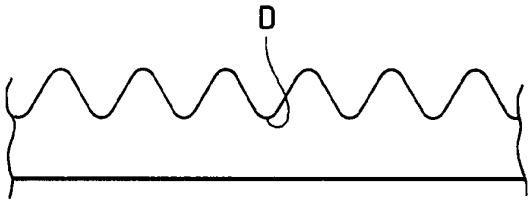

European Patent Office

EUROPEAN SEARCH REPORT

Application Number

EP 92115346.6

DOCUMENTS CONSIDERED TO BE RELEVANT

Category	Citation of document with indication, where appropriate, of relevant passages	Relevant to claim	CLASSIFICATION OF THE APPLICATION (Int. Cl.5)
Y	FR - A - 2 576 441 (BLANCHET) * Fig. 1; abstract *	1	G 09 F 13/16 G 09 F 13/04
A	--	2,3,4, 6,7,9, 10,11	
Y	GB - A - 315 743 (BURNS) * Fig. 2,3,4 *	1	
A	--	9,10, 14	
A	GB - A - 325 957 (TAYLOR) * Fig. 1,2,3 *	1,8,9, 10	
A	--		
A	EP - A - 0 392 863 (FUJITSU LTD.) * Fig. 1,4 *	1,3,6, 9,10	
A	--		
A	EP - A - 0 395 344 (MITSUBISHI RAYON CO. LTD.) * Fig. 1,2,3,4,15,19,24,27 *	1,9,10	

TECHNICAL FIELDS SEARCHED (Int. Cl.5)

G 09 F 13/00
G 09 F 9/00

The present search report has been drawn up for all claims

Place of search	Date of completion of the search	Examiner
VIENNA	06-11-1992	BRÄUER

CATEGORY OF CITED DOCUMENTS

X : particularly relevant if taken alone
Y : particularly relevant if combined with another document of the same category
A : technological background
O : non-written disclosure
P : intermediate document

T : theory or principle underlying the invention
E : earlier patent document, but published on, or after the filing date
D : document cited in the application
L : document cited for other reasons

& : member of the same patent family, corresponding document

EPO FORM 1503 03.82 (P0401)