UNITED STATES DISTRICT COURT

for the

EASTERN DISTRICT OF TEXAS

SINOTECHNIX, LLC *Plaintiff* v. SAMSUNG ELECTRONICS CO., LTD., et al. *Defendant*	))))))	Civil Action No. 2:24-cv-00544-JRG-RSP

SUBPOENA TO PRODUCE DOCUMENTS, INFORMATION, OR OBJECTS OR TO PERMIT INSPECTION OF PREMISES IN A CIVIL ACTION

To: CARCLO US HOLDINGS, INC., 600 Depot Street, Latrobe, PA 15650
c/o THE PRENTICE-HALL CORPORATION SYSTEM, INC. 251 LITTLE FALLS DR., WILMINGTON, DE 19808

(Name of person to whom this subpoena is directed)

☑ *Production:* **YOU ARE COMMANDED** to produce at the time, date, and place set forth below the following documents, electronically stored information, or objects, and to permit inspection, copying, testing, or sampling of the material: See Attachments A-C

Place:	Date and Time:
TransPerfect 1 PPG Place, Suite 1200 Pittsburgh, PA 15222	04/14/2025 6:00 pm

☐ *Inspection of Premises:* **YOU ARE COMMANDED** to permit entry onto the designated premises, land, or other property possessed or controlled by you at the time, date, and location set forth below, so that the requesting party may inspect, measure, survey, photograph, test, or sample the property or any designated object or operation on it.

Place:	Date and Time:

The following provisions of Fed. R. Civ. P. 45 are attached – Rule 45(c), relating to the place of compliance; Rule 45(d), relating to your protection as a person subject to a subpoena; and Rule 45(e) and (g), relating to your duty to respond to this subpoena and the potential consequences of not doing so.

Date: 03/31/2025

CLERK OF COURT

OR

	/s/ Asim Zaidi
Signature of Clerk or Deputy Clerk	*Attorney's signature*

The name, address, e-mail address, and telephone number of the attorney representing *(name of party)* Samsung Electronics Co., Ltd. and Samsung Electronics America, Inc., who issues or requests this subpoena, are:

Asim Zaidi, Desmarais LLP - 230 Park Ave, New York, NY 10169 - (212) 808-1044 - AZaidi@DLLP.com

Notice to the person who issues or requests this subpoena

If this subpoena commands the production of documents, electronically stored information, or tangible things or the inspection of premises before trial, a notice and a copy of the subpoena must be served on each party in this case before it is served on the person to whom it is directed. Fed. R. Civ. P. 45(a)(4).

Civil Action No. 2:24-cv-00544-JRG-RSP

PROOF OF SERVICE

(This section should not be filed with the court unless required by Fed. R. Civ. P. 45.)

I received this subpoena for *(name of individual and title, if any)* _____

on *(date)* _____ .

❒ I served the subpoena by delivering a copy to the named person as follows: _____

_____

_____ on *(date)* _____ ; or

❒ I returned the subpoena unexecuted because: _____

_____ .

Unless the subpoena was issued on behalf of the United States, or one of its officers or agents, I have also tendered to the witness the fees for one day's attendance, and the mileage allowed by law, in the amount of $ _____ .

My fees are $ _____ for travel and $ _____ for services, for a total of $ 0.00 .

I declare under penalty of perjury that this information is true.

Date: _____

_____
Server's signature

_____
Printed name and title

_____
Server's address

Additional information regarding attempted service, etc.:

Federal Rule of Civil Procedure 45 (c), (d), (e), and (g) (Effective 12/1/13)

(c) Place of Compliance.

(1) ***For a Trial, Hearing, or Deposition.*** A subpoena may command a person to attend a trial, hearing, or deposition only as follows:
(A) within 100 miles of where the person resides, is employed, or regularly transacts business in person; or
(B) within the state where the person resides, is employed, or regularly transacts business in person, if the person
(i) is a party or a party's officer; or
(ii) is commanded to attend a trial and would not incur substantial expense.

(2) ***For Other Discovery.*** A subpoena may command:
(A) production of documents, electronically stored information, or tangible things at a place within 100 miles of where the person resides, is employed, or regularly transacts business in person; and
(B) inspection of premises at the premises to be inspected.

(d) Protecting a Person Subject to a Subpoena; Enforcement.

(1) ***Avoiding Undue Burden or Expense; Sanctions.*** A party or attorney responsible for issuing and serving a subpoena must take reasonable steps to avoid imposing undue burden or expense on a person subject to the subpoena. The court for the district where compliance is required must enforce this duty and impose an appropriate sanction—which may include lost earnings and reasonable attorney's fees—on a party or attorney who fails to comply.

(2) ***Command to Produce Materials or Permit Inspection.***
(A) *Appearance Not Required.* A person commanded to produce documents, electronically stored information, or tangible things, or to permit the inspection of premises, need not appear in person at the place of production or inspection unless also commanded to appear for a deposition, hearing, or trial.
(B) *Objections.* A person commanded to produce documents or tangible things or to permit inspection may serve on the party or attorney designated in the subpoena a written objection to inspecting, copying, testing, or sampling any or all of the materials or to inspecting the premises—or to producing electronically stored information in the form or forms requested. The objection must be served before the earlier of the time specified for compliance or 14 days after the subpoena is served. If an objection is made, the following rules apply:
(i) At any time, on notice to the commanded person, the serving party may move the court for the district where compliance is required for an order compelling production or inspection.
(ii) These acts may be required only as directed in the order, and the order must protect a person who is neither a party nor a party's officer from significant expense resulting from compliance.

(3) ***Quashing or Modifying a Subpoena.***
(A) *When Required.* On timely motion, the court for the district where compliance is required must quash or modify a subpoena that:
(i) fails to allow a reasonable time to comply;
(ii) requires a person to comply beyond the geographical limits specified in Rule 45(c);
(iii) requires disclosure of privileged or other protected matter, if no exception or waiver applies; or
(iv) subjects a person to undue burden.
(B) *When Permitted.* To protect a person subject to or affected by a subpoena, the court for the district where compliance is required may, on motion, quash or modify the subpoena if it requires:
(i) disclosing a trade secret or other confidential research, development, or commercial information; or
(ii) disclosing an unretained expert's opinion or information that does not describe specific occurrences in dispute and results from the expert's study that was not requested by a party.
(C) *Specifying Conditions as an Alternative.* In the circumstances described in Rule 45(d)(3)(B), the court may, instead of quashing or modifying a subpoena, order appearance or production under specified conditions if the serving party:
(i) shows a substantial need for the testimony or material that cannot be otherwise met without undue hardship; and
(ii) ensures that the subpoenaed person will be reasonably compensated.

(e) Duties in Responding to a Subpoena.

(1) ***Producing Documents or Electronically Stored Information.*** These procedures apply to producing documents or electronically stored information:
(A) *Documents.* A person responding to a subpoena to produce documents must produce them as they are kept in the ordinary course of business or must organize and label them to correspond to the categories in the demand.
(B) *Form for Producing Electronically Stored Information Not Specified.* If a subpoena does not specify a form for producing electronically stored information, the person responding must produce it in a form or forms in which it is ordinarily maintained or in a reasonably usable form or forms.
(C) *Electronically Stored Information Produced in Only One Form.* The person responding need not produce the same electronically stored information in more than one form.
(D) *Inaccessible Electronically Stored Information.* The person responding need not provide discovery of electronically stored information from sources that the person identifies as not reasonably accessible because of undue burden or cost. On motion to compel discovery or for a protective order, the person responding must show that the information is not reasonably accessible because of undue burden or cost. If that showing is made, the court may nonetheless order discovery from such sources if the requesting party shows good cause, considering the limitations of Rule 26(b)(2)(C). The court may specify conditions for the discovery.

(2) ***Claiming Privilege or Protection.***
(A) *Information Withheld.* A person withholding subpoenaed information under a claim that it is privileged or subject to protection as trial-preparation material must:
(i) expressly make the claim; and
(ii) describe the nature of the withheld documents, communications, or tangible things in a manner that, without revealing information itself privileged or protected, will enable the parties to assess the claim.
(B) *Information Produced.* If information produced in response to a subpoena is subject to a claim of privilege or of protection as trial-preparation material, the person making the claim may notify any party that received the information of the claim and the basis for it. After being notified, a party must promptly return, sequester, or destroy the specified information and any copies it has; must not use or disclose the information until the claim is resolved; must take reasonable steps to retrieve the information if the party disclosed it before being notified; and may promptly present the information under seal to the court for the district where compliance is required for a determination of the claim. The person who produced the information must preserve the information until the claim is resolved.

(g) Contempt.
The court for the district where compliance is required—and also, after a motion is transferred, the issuing court—may hold in contempt a person who, having been served, fails without adequate excuse to obey the subpoena or an order related to it.

For access to subpoena materials, see Fed. R. Civ. P. 45(a) Committee Note (2013).

UNITED STATES DISTRICT COURT

for the

EASTERN DISTRICT OF TEXAS

SINOTECHNIX, LLC *Plaintiff* v. SAMSUNG ELECTRONICS CO., LTD., et al. *Defendant*	))))))	Civil Action No. 2:24-cv-00544-JRG-RSP

SUBPOENA TO TESTIFY AT A DEPOSITION IN A CIVIL ACTION

To: CARCLO US HOLDINGS, INC., 600 Depot Street, Latrobe, PA 15650
c/o THE PRENTICE-HALL CORPORATION SYSTEM, INC. 251 LITTLE FALLS DR., WILMINGTON, DE 19808

(Name of person to whom this subpoena is directed)

☑ Testimony: YOU ARE COMMANDED to appear at the time, date, and place set forth below to testify at a deposition to be taken in this civil action. If you are an organization, you must promptly confer in good faith with the party serving this subpoena about the following matters, or those set forth in an attachment, and you must designate one or more officers, directors, or managing agents, or designate other persons who consent to testify on your behalf about these matters: Documents and topics described in concurrent Subpoena to Product Documents, Information or Objects

Place: TransPerfect 1 PPG Place, Suite 1200 Pittsburgh, PA 15222	Date and Time: 04/28/2025 9:00 am

The deposition will be recorded by this method: Audio, Video, Stenographic

☐ *Production:* You, or your representatives, must also bring with you to the deposition the following documents, electronically stored information, or objects, and must permit inspection, copying, testing, or sampling of the material:

The following provisions of Fed. R. Civ. P. 45 are attached – Rule 45(c), relating to the place of compliance; Rule 45(d), relating to your protection as a person subject to a subpoena; and Rule 45(e) and (g), relating to your duty to respond to this subpoena and the potential consequences of not doing so.

Date: 03/31/2025

CLERK OF COURT

OR

Signature of Clerk or Deputy Clerk

/s/ Asim Zaidi

Attorney's signature

The name, address, e-mail address, and telephone number of the attorney representing *(name of party)* Samsung Electronics Co., Ltd. and Samsung Electronics America, Inc., who issues or requests this subpoena, are:

Asim Zaidi, Desmarais LLP - 230 Park Ave, New York, NY 10169 - (212) 808-1044 - AZaidi@DLLP.com

Notice to the person who issues or requests this subpoena

If this subpoena commands the production of documents, electronically stored information, or tangible things before trial, a notice and a copy of the subpoena must be served on each party in this case before it is served on the person to whom it is directed. Fed. R. Civ. P. 45(a)(4).

Civil Action No. 2:24-cv-00544-JRG-RSP

PROOF OF SERVICE

(This section should not be filed with the court unless required by Fed. R. Civ. P. 45.)

I received this subpoena for *(name of individual and title, if any)* _____ on *(date)* _____ .

❒ I served the subpoena by delivering a copy to the named individual as follows: _____

_____ on *(date)* _____ ; or

❒ I returned the subpoena unexecuted because: _____ .

Unless the subpoena was issued on behalf of the United States, or one of its officers or agents, I have also tendered to the witness the fees for one day's attendance, and the mileage allowed by law, in the amount of $ _____ .

My fees are $ _____ for travel and $ _____ for services, for a total of $ 0.00 .

I declare under penalty of perjury that this information is true.

Date: _____

_____
Server's signature

_____
Printed name and title

_____
Server's address

Additional information regarding attempted service, etc.:

Federal Rule of Civil Procedure 45 (c), (d), (e), and (g) (Effective 12/1/13)

(c) Place of Compliance.

(1) ***For a Trial, Hearing, or Deposition.*** A subpoena may command a person to attend a trial, hearing, or deposition only as follows:
(A) within 100 miles of where the person resides, is employed, or regularly transacts business in person; or
(B) within the state where the person resides, is employed, or regularly transacts business in person, if the person
(i) is a party or a party's officer; or
(ii) is commanded to attend a trial and would not incur substantial expense.

(2) ***For Other Discovery.*** A subpoena may command:
(A) production of documents, electronically stored information, or tangible things at a place within 100 miles of where the person resides, is employed, or regularly transacts business in person; and
(B) inspection of premises at the premises to be inspected.

(d) Protecting a Person Subject to a Subpoena; Enforcement.

(1) ***Avoiding Undue Burden or Expense; Sanctions.*** A party or attorney responsible for issuing and serving a subpoena must take reasonable steps to avoid imposing undue burden or expense on a person subject to the subpoena. The court for the district where compliance is required must enforce this duty and impose an appropriate sanction—which may include lost earnings and reasonable attorney's fees—on a party or attorney who fails to comply.

(2) ***Command to Produce Materials or Permit Inspection.***
(A) *Appearance Not Required.* A person commanded to produce documents, electronically stored information, or tangible things, or to permit the inspection of premises, need not appear in person at the place of production or inspection unless also commanded to appear for a deposition, hearing, or trial.
(B) *Objections.* A person commanded to produce documents or tangible things or to permit inspection may serve on the party or attorney designated in the subpoena a written objection to inspecting, copying, testing, or sampling any or all of the materials or to inspecting the premises—or to producing electronically stored information in the form or forms requested. The objection must be served before the earlier of the time specified for compliance or 14 days after the subpoena is served. If an objection is made, the following rules apply:
(i) At any time, on notice to the commanded person, the serving party may move the court for the district where compliance is required for an order compelling production or inspection.
(ii) These acts may be required only as directed in the order, and the order must protect a person who is neither a party nor a party's officer from significant expense resulting from compliance.

(3) ***Quashing or Modifying a Subpoena.***

(A) *When Required.* On timely motion, the court for the district where compliance is required must quash or modify a subpoena that:

(i) fails to allow a reasonable time to comply;
(ii) requires a person to comply beyond the geographical limits specified in Rule 45(c);
(iii) requires disclosure of privileged or other protected matter, if no exception or waiver applies; or
(iv) subjects a person to undue burden.
(B) *When Permitted.* To protect a person subject to or affected by a subpoena, the court for the district where compliance is required may, on motion, quash or modify the subpoena if it requires:

(i) disclosing a trade secret or other confidential research, development, or commercial information; or
(ii) disclosing an unretained expert's opinion or information that does not describe specific occurrences in dispute and results from the expert's study that was not requested by a party.
(C) *Specifying Conditions as an Alternative.* In the circumstances described in Rule 45(d)(3)(B), the court may, instead of quashing or modifying a subpoena, order appearance or production under specified conditions if the serving party:
(i) shows a substantial need for the testimony or material that cannot be otherwise met without undue hardship; and
(ii) ensures that the subpoenaed person will be reasonably compensated.

(e) Duties in Responding to a Subpoena.

(1) ***Producing Documents or Electronically Stored Information.*** These procedures apply to producing documents or electronically stored information:
(A) *Documents.* A person responding to a subpoena to produce documents must produce them as they are kept in the ordinary course of business or must organize and label them to correspond to the categories in the demand.
(B) *Form for Producing Electronically Stored Information Not Specified.* If a subpoena does not specify a form for producing electronically stored information, the person responding must produce it in a form or forms in which it is ordinarily maintained or in a reasonably usable form or forms.
(C) *Electronically Stored Information Produced in Only One Form.* The person responding need not produce the same electronically stored information in more than one form.
(D) *Inaccessible Electronically Stored Information.* The person responding need not provide discovery of electronically stored information from sources that the person identifies as not reasonably accessible because of undue burden or cost. On motion to compel discovery or for a protective order, the person responding must show that the information is not reasonably accessible because of undue burden or cost. If that showing is made, the court may nonetheless order discovery from such sources if the requesting party shows good cause, considering the limitations of Rule 26(b)(2)(C). The court may specify conditions for the discovery.

(2) ***Claiming Privilege or Protection.***
(A) *Information Withheld.* A person withholding subpoenaed information under a claim that it is privileged or subject to protection as trial-preparation material must:
(i) expressly make the claim; and
(ii) describe the nature of the withheld documents, communications, or tangible things in a manner that, without revealing information itself privileged or protected, will enable the parties to assess the claim.
(B) *Information Produced.* If information produced in response to a subpoena is subject to a claim of privilege or of protection as trial-preparation material, the person making the claim may notify any party that received the information of the claim and the basis for it. After being notified, a party must promptly return, sequester, or destroy the specified information and any copies it has; must not use or disclose the information until the claim is resolved; must take reasonable steps to retrieve the information if the party disclosed it before being notified; and may promptly present the information under seal to the court for the district where compliance is required for a determination of the claim. The person who produced the information must preserve the information until the claim is resolved.

(g) Contempt.
The court for the district where compliance is required—and also, after a motion is transferred, the issuing court—may hold in contempt a person who, having been served, fails without adequate excuse to obey the subpoena or an order related to it.

For access to subpoena materials, see Fed. R. Civ. P. 45(a) Committee Note (2013).

Attachment A

Attachment A

Pursuant to Rules 34 and 45 of the Federal Rules of Civil Procedure, You are required to produce the documents requested below for inspection and copying. The requested documents are to be produced on or before April 14, 2025 at 5:00pm at 1 PPG Place Suite 1200 Pittsburgh, PA 15222 or at such other time and place as may be agreed by counsel. A copy of the Protective Order entered in this action for the protection of any requested proprietary, confidential, or commercially sensitive information is attached hereto as Attachment B.

DEFINITIONS AND INSTRUCTIONS

1. As used herein, "You" and "Your" means Carclo US Holdings Inc., and all of its predecessors (merged, acquired, or otherwise), successors, subsidiaries, parents, sisters, divisions, departments, partnerships, and affiliates thereof, and all officers, directors, principals, agents, employees, attorneys, and other persons acting on its behalf.

2. As used herein, "Samsung" means Samsung Electronics Co. Ltd. and all of its predecessors (merged, acquired, or otherwise), successors, subsidiaries, parents, sisters, divisions, departments, partnerships, and affiliates thereof, and all officers, directors, principals, agents, employees, attorneys, and other persons acting on its behalf.

3. As used herein, "Seoul Semiconductor" means Seoul Semiconductor Co., Ltd. and its predecessor or successor entities, and any of its subsidiaries, divisions, affiliates, and any present and former agents, employees, partners, attorneys, representatives, and any other person or entity acting in concert with Seoul Semiconductor Co., Ltd., on behalf of Seoul Semiconductor Co., Ltd., or within the control of Seoul Semiconductor Co., Ltd, including, but not limited to, Seoul Optodevice Co. Ltd. and Seoul Viosys Co. Ltd.

4. As used herein, "Related Publication(s)," as applied to a publication, means the identified publication and any publications concerning the same or related subject matter; and, as

applied to a patent or patent application or publication, further includes all patents in the same family or otherwise sharing a priority relationship including provisionals, continuations, continuations-in-part, divisionals, and foreign counterparts.

5. As used herein, "Relevant Publication(s)" include the publications included in Attachment C; all publications (including patents and patent applications or publications in any jurisdiction) describing any Relevant Product(s) or Similar Products; and any Related Publication(s). *See* Attachment C.

6. As used herein, "Similar Product(s)," as applied to a product, means the identified product and any products having similar structure, function, and/or manufacturing process.

7. As used herein, "Relevant Product(s)" refers to the Carclo Side-Emitting Optic, any products described in the Relevant Publications, and any Similar Products.

8. As used herein, "Relevant Date(s)" include October 7, 2004 and December 3, 2007.

9. As used herein, "and" and "or" shall be construed conjunctively and disjunctively, so as to acquire the broadest possible meaning.

10. As used herein, "any" and "all" shall be construed to mean "each and every," so as to acquire the broadest possible meaning.

11. As used herein, "each" and "every" mean "each and every."

12. As used herein, "include" and "including" shall be construed to mean "without limitation," so as to acquire the broadest possible meaning.

13. As used herein, "document" has the same broad meaning as in Rule 34 of the Federal Rules of Civil Procedure. The term "document" also encompasses tangible things.

14. As used herein, "person" means any natural person or any business, legal, or governmental entity or association.

15. As used herein, "related" or "relating" to any given subject means, without limitation, identifying, describing, discussing, concerning, assessing, stating, reflecting, constituting, containing, embodying, tending to support or refute, or referring directly or indirectly to, in any way, the particular subject matter identified.

16. As used herein, "identify" as applied to an event means to provide a description of the event, the date of the event, the location of the event, and the individuals and entities participating in the event.

17. As used herein, the singular of any word shall include the plural, and the plural shall include the singular.

18. Pursuant to the requests herein, You are to produce any and all relevant documents within the Your possession, custody, or control, including documents located in the files of any and all of Your past and present association members, subsidiaries, parents, sisters, partnerships, directors, officers, agents, representatives, employees, attorneys, and accountants.

19. Produce each document in its entirety, without deletions, redactions, or exclusions, regardless of whether you deem part of a document outside of the scope of the requests.

20. Produce documents that identify the file or other source in which each document responsive to these requests is found or keep a record of such information.

21. Documents from any single file should be produced in the same order as they were found in such file, including any labels, files, folders, and/or containers in which such documents are located or with which such documents are associated. If copies of documents are produced in lieu of the originals, such copies should be legible and bound or stapled in the same manner as the originals.

22. All documents that constitute electronically stored information, with that term having the meaning ascribed to it by the Federal Rules of Civil Procedure, shall be produced in an intelligible format.

23. If a document once existed, but has been lost, destroyed, erased, or otherwise is no longer in your possession, identify the document and state the details concerning the loss or destruction of such document, including the name and address of the present custodian of any such document known to You.

24. If, after conducting a reasonable investigation, a full answer cannot be provided for any request for the production of documents, state that such is the case and answer to the fullest extent possible, stating what responsive documents or information are available, what documents or information cannot be provided, and what efforts were made to obtain the unavailable documents or information.

25. If any of the documents requested herein are no longer in Your possession, custody, or control, identify for each such document the date, the type of the document, any senders and recipients, and any persons receiving any copies of each such document, and provide a summary of each such document's pertinent contents.

26. If any document responsive to these requests has been destroyed, describe the contents of the document, identify the location of any copies of the document, and the date of destruction of the document.

27. If any document is withheld on a claim of attorney/client privilege or work product immunity, provide a detailed privilege log that describes the nature and basis for your claim and the subject matter of the document withheld, in a manner sufficient to disclose facts upon which You rely in asserting your claim and to identify the grounds and reasons for withholding the

document. Such description should, at a minimum, include the date of the withheld document, an identification of each and every author of the document, an identification of each and every person who received the document, an identification of each and every person from whom the document was received, a description of the subject of the document, and further information relating to the document sufficient to explain the claim of privilege or immunity and to permit the adjudication of the propriety of that claim.

28. The document requests herein shall be deemed continuing, and it is requested that You provide supplemental responses and production as additional information or documents become available, in accordance with Rule 26(e) of the Federal Rules of Civil Procedure.

29. If a document is in a language other than English and an English translation exists, provide both documents.

DOCUMENT REQUESTS

1. Documents, including but not limited to diagrams, cross-sections, and specifications, sufficient to show the structure and/or configuration of the Relevant Product(s) and all Similar Products.

2. Documents sufficient to show the material composition of the Relevant Product(s) and all Similar Products.

3. Documents, including but not limited to process flows, sufficient to show the manufacturing process concerning the Relevant Product(s) and all Similar Products.

4. Documents sufficient to show the operation and functionality of the Relevant Product(s) and all Similar Products.

5. Documents sufficient to identify any suppliers for the Relevant Product(s) or any Similar Products.

6. Documents sufficient to identify any customers for the Relevant Products or any Similar Products.

7. Documents sufficient to show the package structure of Relevant Products or any Similar Products, including any lead frames, resins/encapsulants, and LED chips

8. Documents sufficient to show the structure and function of displays or display modules (including backlights) that use and/or include the Relevant Product(s) or any Similar Products; including but not limited to any diffusers, reflectors, LEDs or other light sources, light guides, LCD panels, and air gaps.

9. Documents sufficient to show the date on which each of the Relevant Product(s) or any Similar Products (or products that use and/or include the Relevant Product(s) or any Similar Products) were first sold, on sale, offered for sale, in public use, or otherwise available to the public in the United States (including, for example, product catalogs, announcements, invoices, and sales records).

10. Relevant Publication(s) and Related Publications.

11. Documents sufficient to show public availability of the Relevant Publication(s) and all Related Publications prior to each Relevant Date.

12. Physical samples of each Relevant Product and any Similar Products.

13. Documents describing any communication between You and Seoul Semiconductor relating to any of Your products with an LED or lens (including the Relevant Product(s) and any Similar Products) before the Relevant Date(s), including but not limited to any discussion, negotiation, and final agreement for the demonstration, exhibition, or sale of any such product to Seoul Semiconductor.

14. Documents sufficient to establish authenticity (within the meaning of Fed. R. Evid. 901) of each document You produce in response to this subpoena.

Attachment C

Attachment C-1

Side-Emitting Optic

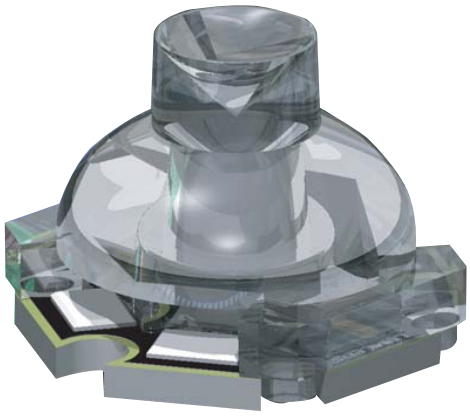

The Carclo Side-Emitting Optic is ideal for applications where a narrow beam of light is required around a full 360° in one plane.

The Optic has been designed to fit neatly onto a Luxeon star board but can also be used with a Luxeon Emitter on a custom circuit board.

Typical uses are hazard lights, runway lights, harbour warning lights and, when used with a blue Luxeon, emergency service flashing beacons. The optic is particularly suited to feeding light into thick acrylic sheet for backlighting or light-guiding applications.

The optic is available in two versions; The 3/5 watt version is optimised for the recessed emitter on the 3 watt and 5 watt star board. The 1 watt version is optimised for the surface mounted emitter of the 1 watt star board and for the Luxeon emitter mounted on custom circuit boards.

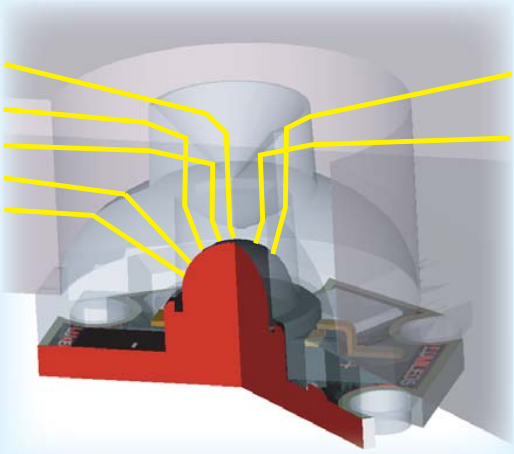

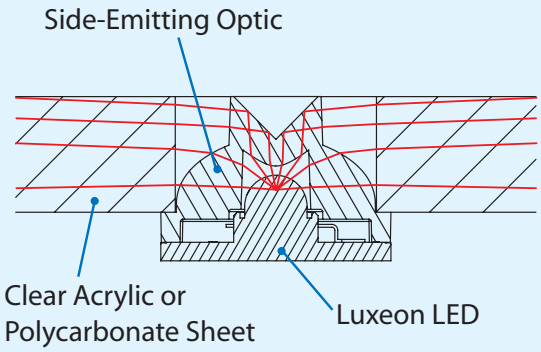

How does it work?

Using a combination of reflective and refractive surfaces, the Side-Emitting Optic re-directs light from the LED into a narrow, tightly controlled beam.

Light leaving the LED upwards is focused by the central lens surface and collimated towards a conical reflector which deflects the beam through 90° onto a refractive cylidrical surface. Light leaving the LED sideways is focused by an anular lens and bent towards the horizontal axis.

Computer raytracing techniques have been used to design the optic and ensure that the two optical paths are balanced and operate at maximum efficiency.

LED OPTICS

How to use the Side-Emitting Optic for Backlighting

The Side-Emitting Optic is the ideal solution for large scale backlighting applications such as poster illumination, roadside warning signs and LCD televisions that use light-guide illumination.

The light-guide is made from clear Acrylic or Polycarbonate sheet with a minimum thickness of 8mm. The underside has a graded texture finish to scatter light out of the guide. The Side-Emitting Optics are placed in 17.5mm (min.) diameter holes along the edge; the holes can be blind or through but the inside surfaces must polished smooth.

The performance can be further enhanced by adding a reflector along the edge nearest the LED's.

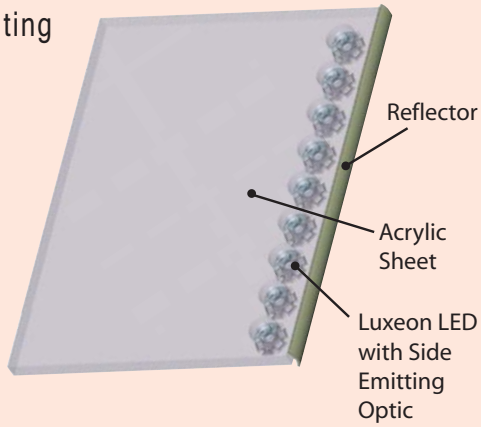

Technical Information

Part No.	Description	Dim'n 'A'	Dim'n 'B'
10039	For 1 Watt Luxeon starboard & emitter	12.6mm	7.6mm
10040	For 3 and 5 Watt Luxeon star boards	11.6mm	6.6mm

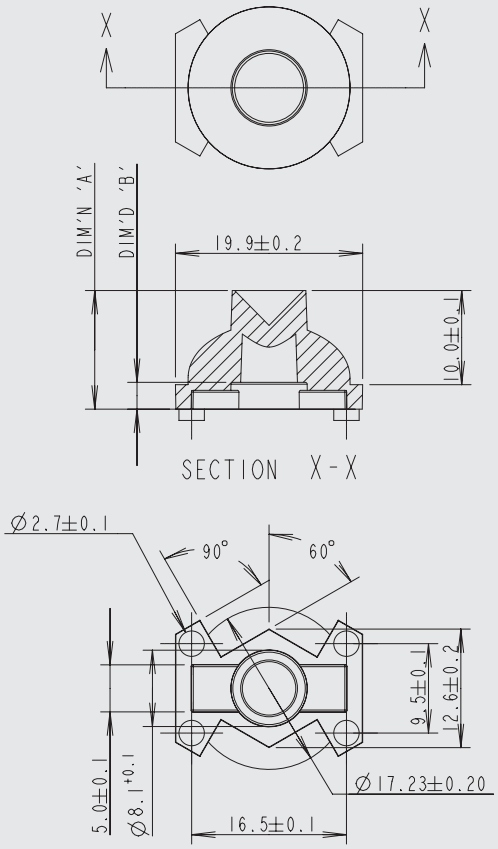

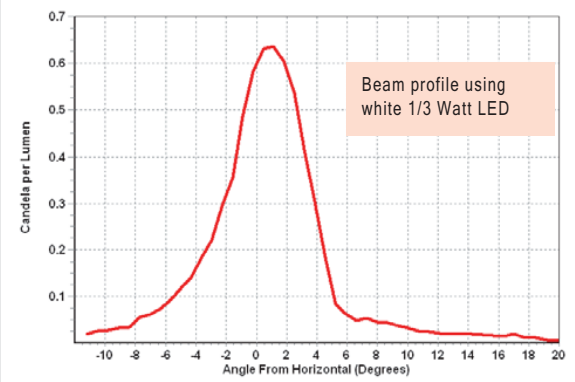

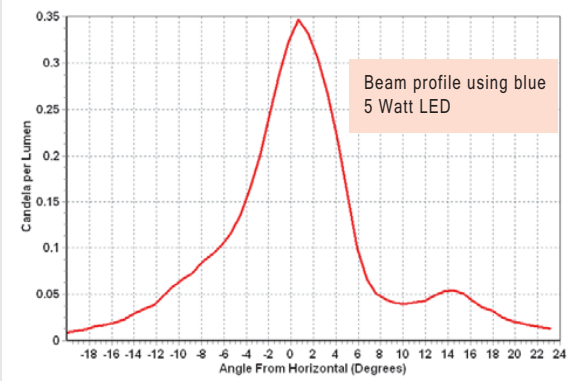

Note: The brightness per lumen of the side emitter with a 5 Watt device is approximately half that of the 1 Watt or 3 Watt devices. This is because the source size of the 5 Watt device is twice that of the 1 and 3 Watt devices. The energy density is therefore halved.

carclo precision optics
www.carclo-optics.com
email: sales@carclo-optics.com

Carclo Tech. Plastics (Slough)Ltd.
111 Buckingham Ave.
Slough, Berkshire
England SL1 4PF
Tel: +44 (0)1753 575011
Fax:+44 (0)1753 811359
Sales Fax: +44 (0)1753 575115

Carclo Tech. Plastics (Slough)Ltd.
Camplaan 20a
2103 GW Heemstede
The Netherlands
Tel: +31 (0)235 287776
Fax:+31 (0)235 284812

CTP-COIL Inc.
1801-D Howard St.
Elk Grove Village
Illinois 60007-2450. USA
Tel: +1 (0)847 228 8818
Fax:+1 (0)847 593 3930

Cert.No. FM25411

Attachment C-2

ISS.	DATE	E.C.N.	DESCRIPTION
1	25-May-07		FIRST ISSUE

© 2007 CARCLO

ALL DIMENSIONS IN mm

CUSTOMER DRAWING

GENERAL VIEW
SCALE 1:1

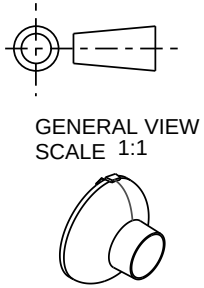

SECTION A-A
SCALE 2:1

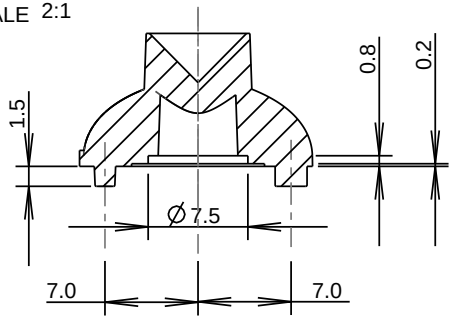

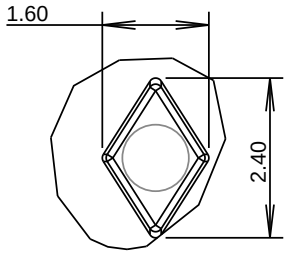

DETAIL C
SCALE 10:1

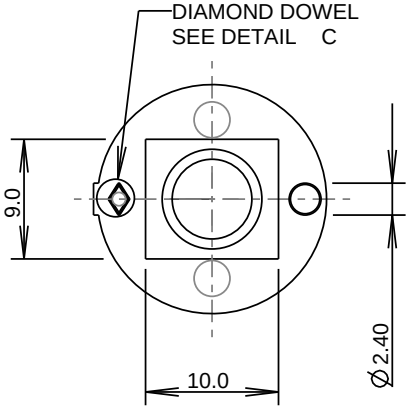

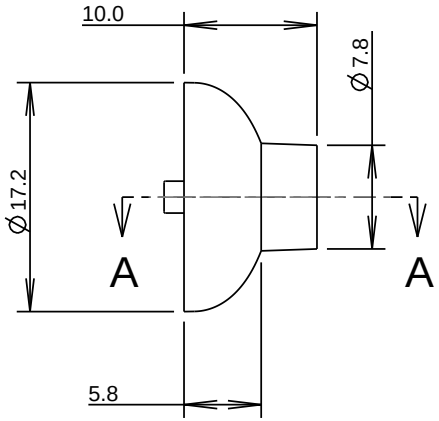

MATERIAL: POLYCARBONATE

carclo technical plastics

CARCLO TECHNICAL PLASTICS (SLOUGH)
111 BUCKINGHAM AVE, SLOUGH
SL1 4PF, ENGLAND
TEL: +44 1753 575011 FAX: +44 1753 811359
e-mail: design@carclo-optics.com}

GENERAL TOLERANCES (UNLESS STATED)

LINEAR		ANGULAR	
X	+/- 0.25	X	+/- 1°
X.X	+/- 0.1	X.X	+/- 0.5°
X.XX	+/- 0.05	X.XX	+/- 0.1°

CUSTOMER: CARCLO

TITLE: 10MM HIGH SIDE EMITTER OPTIC FOR LUXEON REBEL

DRAWN	AJD	DATE	25-May-07
CHK'D		DATE	
APP'D		DATE	
SCALE	2:1	CARCLO PART No.	10267
SIZE	A4	CARCLO DRG. No.	60465
SHEET	1 OF 2		

Downloaded from Arrow.com.

ISS.	DATE	E.C.N.	DESCRIPTION
1	25-May-07		FIRST ISSUE

© 2007 CARCLO

ALL DIMENSIONS IN mm

PCB GLUE PAD AND ALIGNMENT HOLE LAYOUT DIMENSIONS

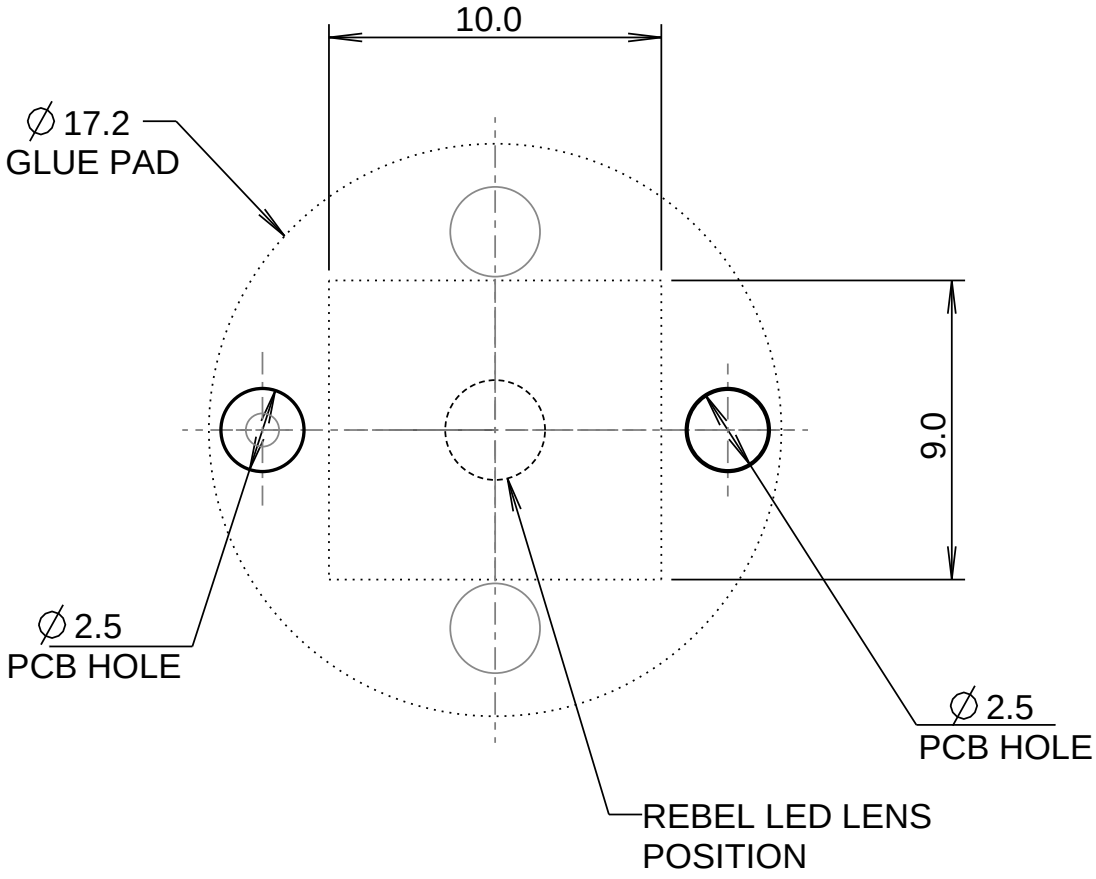

carclo
technical plastics

CARCLO TECHNICAL PLASTICS (SLOUGH)
111 BUCKINGHAM AVE, SLOUGH
SL1 4PF, ENGLAND
TEL: +44 1753 575011 FAX: +44 1753 811359
e-mail: design@carclo-optics.com}

GENERAL TOLERANCES (UNLESS STATED)

LINEAR		ANGULAR	
X	+/- 0.25	X	+/- 1°
X.X	+/- 0.1	X.X	+/- 0.5°
X.XX	+/- 0.05	X.XX	+/- 0.1°

CUSTOMER: CARCLO

TITLE: 10MM HIGH SIDE EMITTER OPTIC FOR LUXEON REBEL

DRAWN	AJD	DATE	25-May-07
CHK'D		DATE	
APP'D		DATE	
SCALE	5:1	CARCLO PART No.	10267
SIZE	A4	CARCLO DRG. No.	60465
SHEET	2 OF 2		

Downloaded from Arrow.com.

Attachment C-3

The Wayback Machine - http ptics/Luxeon-Optics/side-emitter.htm

carclo plc | carclo technical plastics | carclo optics

Side Emitter Optic

To Download the Side Emitter Datasheet (0.19MB) in PDF Format - click here.

Side Emitting Optic

The Carclo Side-Emitting Optic is ideal for applications where a narrow beam of light is required around a full 360o in one plane.

The Optic has been designed to fit neatly onto a Luxeon star board but can also be used with a Luxeon Emitter on a custom circuit board.

Typical uses are hazard lights, runway lights, harbour warning lights and, when used with a blue Luxeon, emergency service flashing beacons. The optic is particularly suited to feeding light into thick acrylic sheet for backlighting or light-guiding applications.

The optic is available in two versions; The 3/5 watt version is optimised for the recessed emitter on the 3 watt and 5 watt star board. The 1 watt version is optimised for the surface mounted emitter of the 1 watt star board and for the Luxeon emitter mounted on custom circuit boards.

The Side-Emitting Optic is the ideal solution for large scale backlighting applications such as poster illumination, roadside warning signs and LCD televisions that use light-guide illumination.

The light-guide is made from clear Acrylic or Polycarbonate sheet with a minimum thickness of 8mm. The underside has a graded texture finish to scatter light out of the guide. The Side-Emitting Optics are placed in 17.5mm (min.) diameter holes along the edge; the holes can be blind or through but the inside surfaces must polished smooth.

The performance can be further enhanced by adding a reflector along the edge nearest the LED's.

Note: The brightness per lumen of the side emitter with a 5 Watt device is approximately half that of the 1 Watt or 3 Watt devices. This is because the source size of the 5 Watt device is twice that of the 1 and 3 Watt devices. The energy density is therefore halved.

For further information, contact:

ian.bryant@carclo-optics.com