US006607286B2

(12) **United States Patent**
West et al.

(10) **Patent No.: US 6,607,286 B2**
(45) **Date of Patent: Aug. 19, 2003**

(54) **LENS AND LENS CAP WITH SAWTOOTH PORTION FOR LIGHT EMITTING DIODE**

(75) Inventors: **Robert S. West**, Clarkston, MI (US); **Gary D. Sasser**, San Jose, CA (US); **James W. Stewart**, San Jose, CA (US)

(73) Assignee: **Lumileds Lighting, U.S., LLC**, San Jose, CA (US)

(*) Notice: Subject to any disclaimer, the term of this patent is extended or adjusted under 35 U.S.C. 154(b) by 0 days.

(21) Appl. No.: **09/849,084**

(22) Filed: **May 4, 2001**

(65) **Prior Publication Data**

US 2002/0163808 A1 Nov. 7, 2002

(51) **Int. Cl.**[7] **F21V 1/04**

(52) **U.S. Cl.** **362/255**; 362/800; 362/326; 362/340; 362/26; 313/512; 313/513

(58) **Field of Search** 362/326, 327, 362/334–340, 186, 800, 26; 313/512, 513

(56) **References Cited**

U.S. PATENT DOCUMENTS

4,192,994 A	*	3/1980	Kastner	250/280
4,342,908 A		8/1982	Henningsen et al.	250/227
5,302,778 A		4/1994	Maurinus	174/52.4
5,335,157 A	*	8/1994	Lyons	362/297
5,608,290 A	*	3/1997	Hutchisson et al.	315/200
5,897,201 A		4/1999	Simon	362/268
6,044,196 A		3/2000	Winston et al.	385/146
6,450,661 B1	*	9/2002	Okumura	362/240

FOREIGN PATENT DOCUMENTS

EP	0 450 560 A2	10/1991
WO	WO 99/13266	3/1999

* cited by examiner

Primary Examiner—Sandra O'Shea
Assistant Examiner—Anabel Ton
(74) *Attorney, Agent, or Firm*—Patent Law Group LLP; Rachel V. Leiterman

(57) **ABSTRACT**

A lens mounted to a light emitting diode package internally redirects light within the lens so that a majority of light is emitted from the lens approximately perpendicular to a package axis of the light emitting diode package. In one embodiment, the light emitted by the light emitting diode package is refracted by a sawtooth portion of the lens and reflected by a total internal reflection portion of the lens.

54 Claims, 14 Drawing Sheets

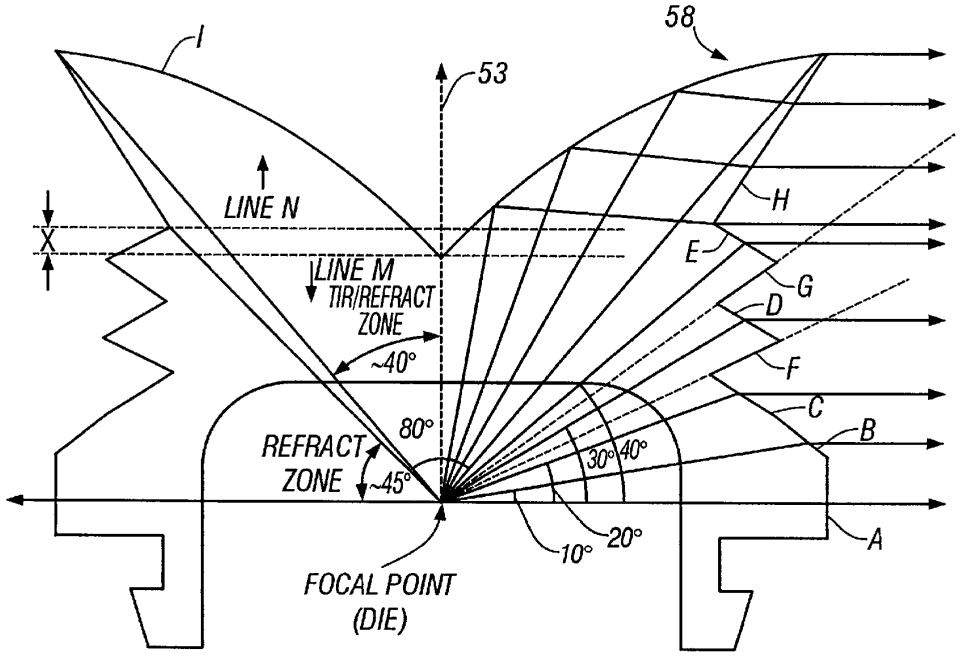

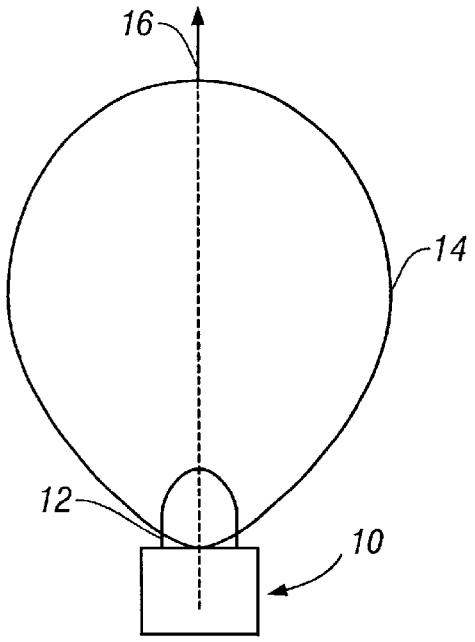

FIG. 1A
(Prior Art)

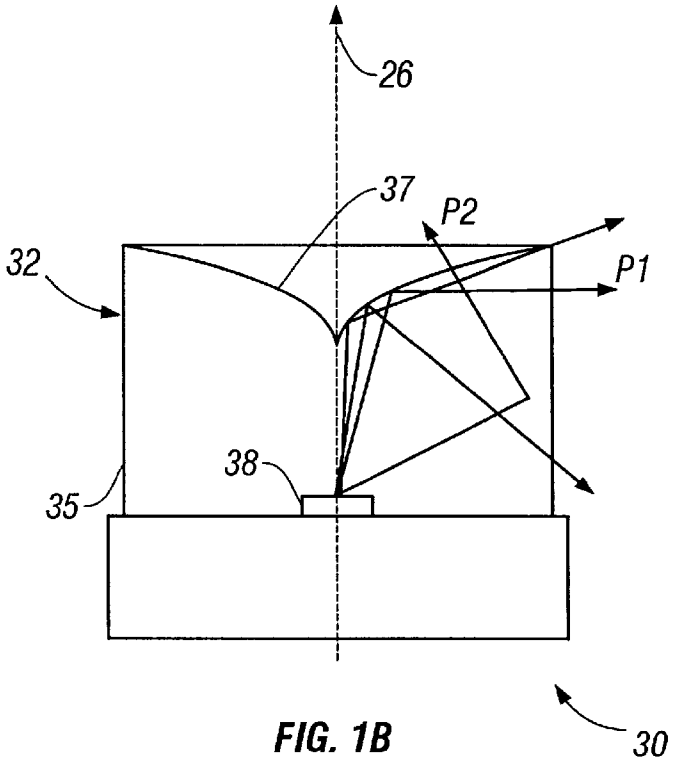

FIG. 1B
(Prior Art)

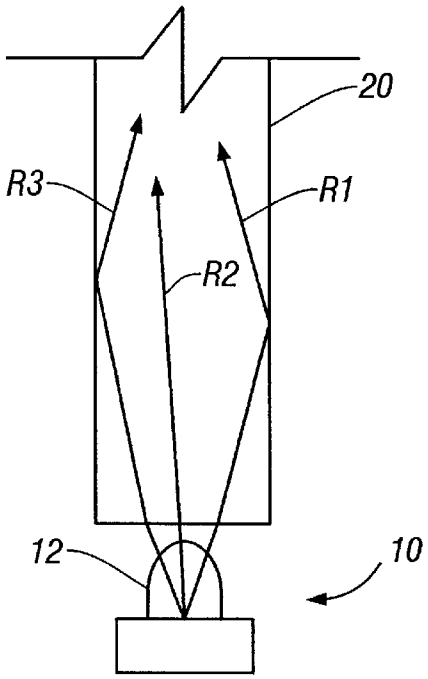

FIG. 2
(Prior Art)

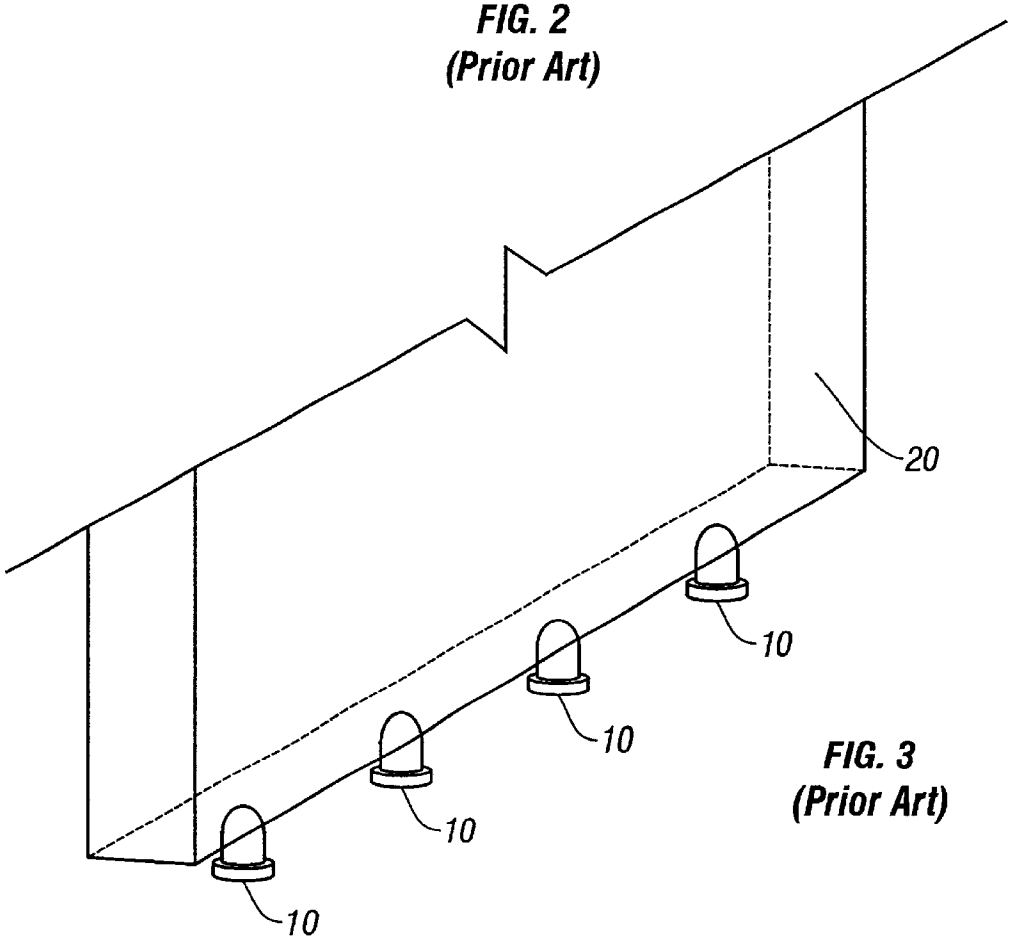

FIG. 3
(Prior Art)

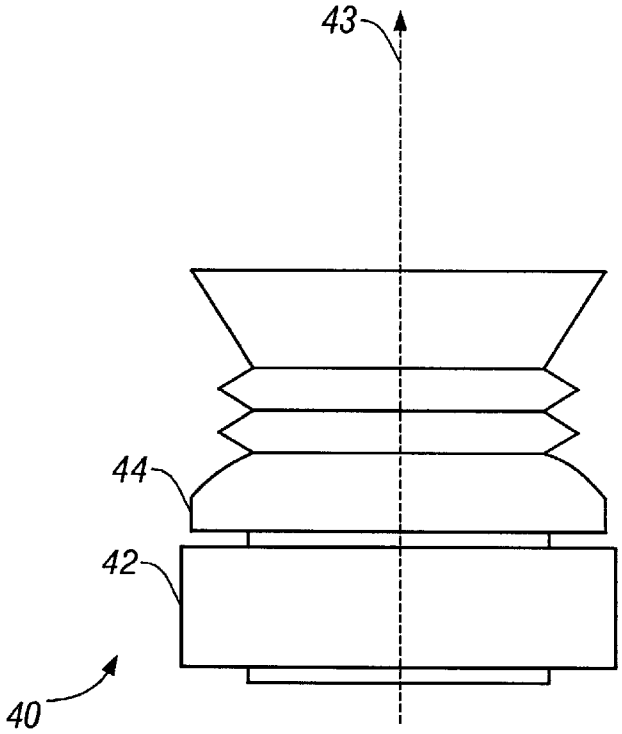

FIG. 4

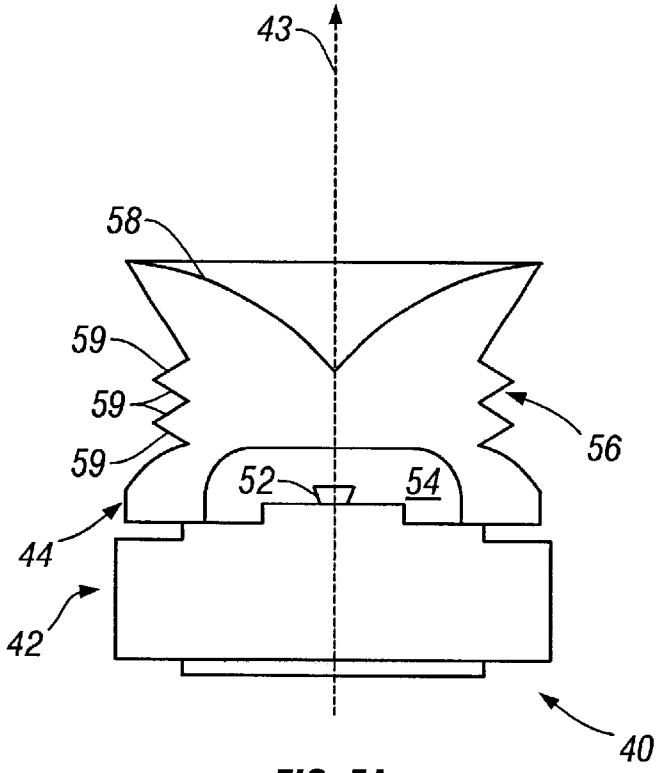

FIG. 5A

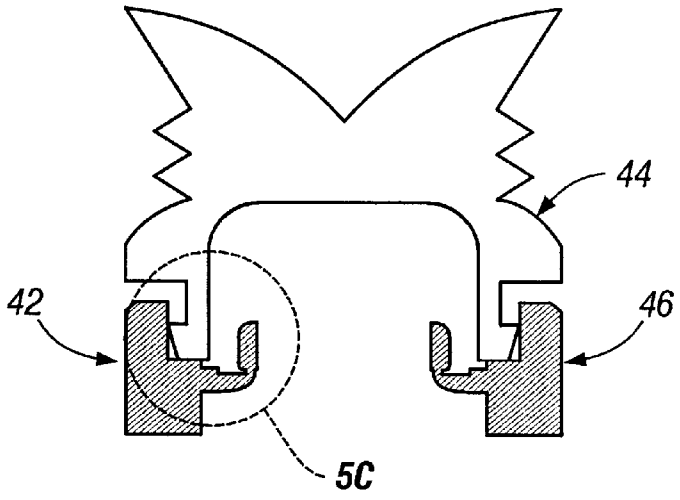

FIG. 5B

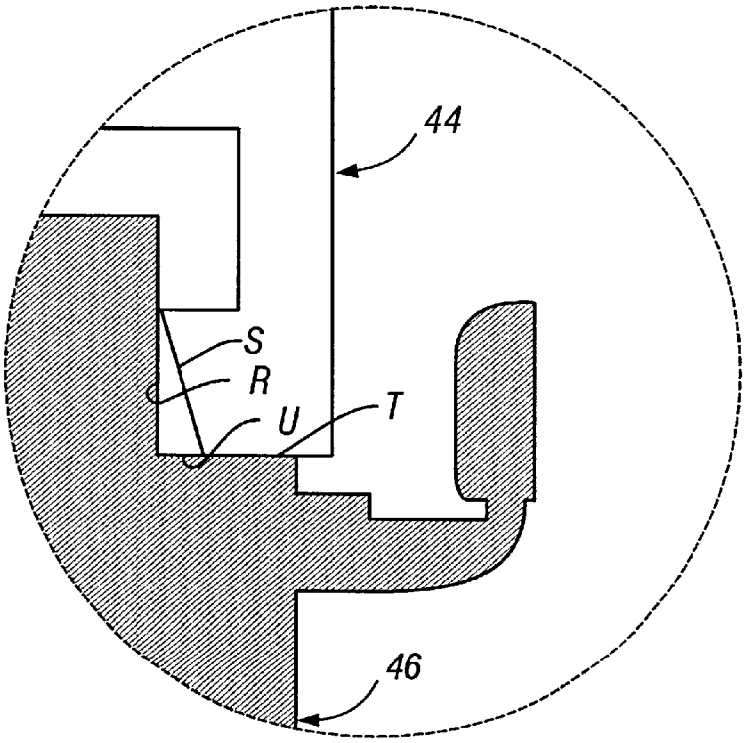

FIG. 5C

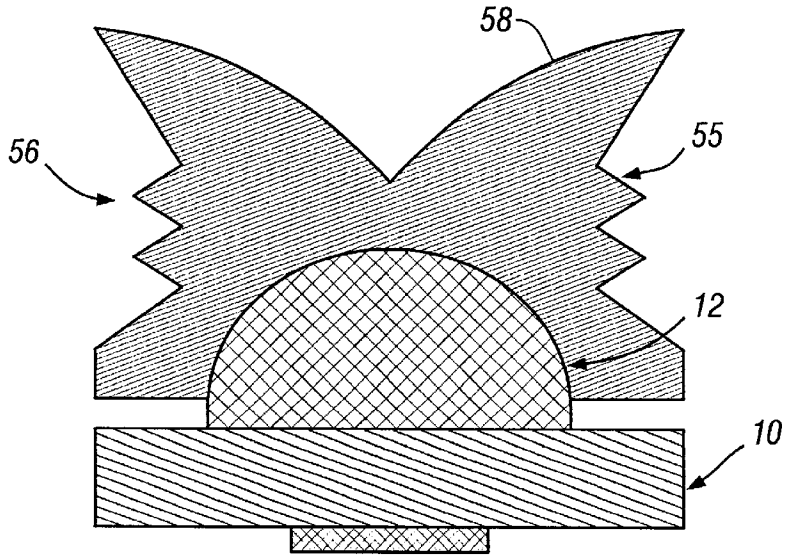
58
56
55
12
10

FIG. 5D

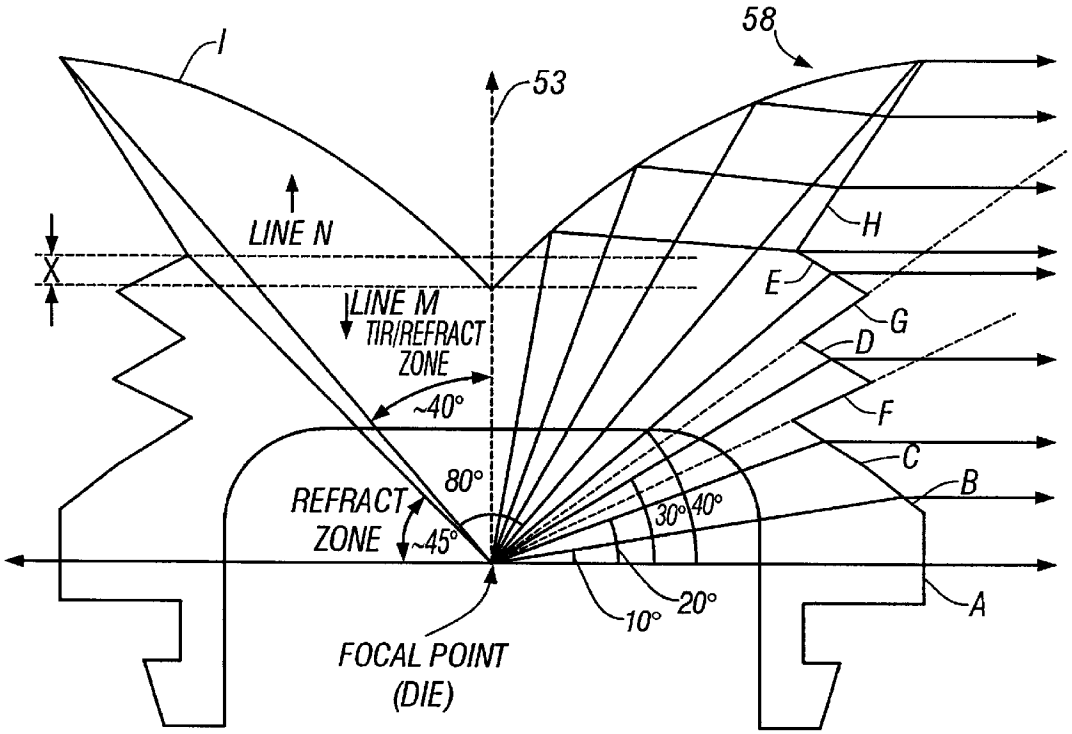
58
I
53
LINE N
X
LINE M
TIR/REFRACT
ZONE
~40°
80°
REFRACT
ZONE
~45°
H
E
G
D
F
C
B
A
30°
40°
20°
10°
FOCAL POINT
(DIE)

FIG. 5E

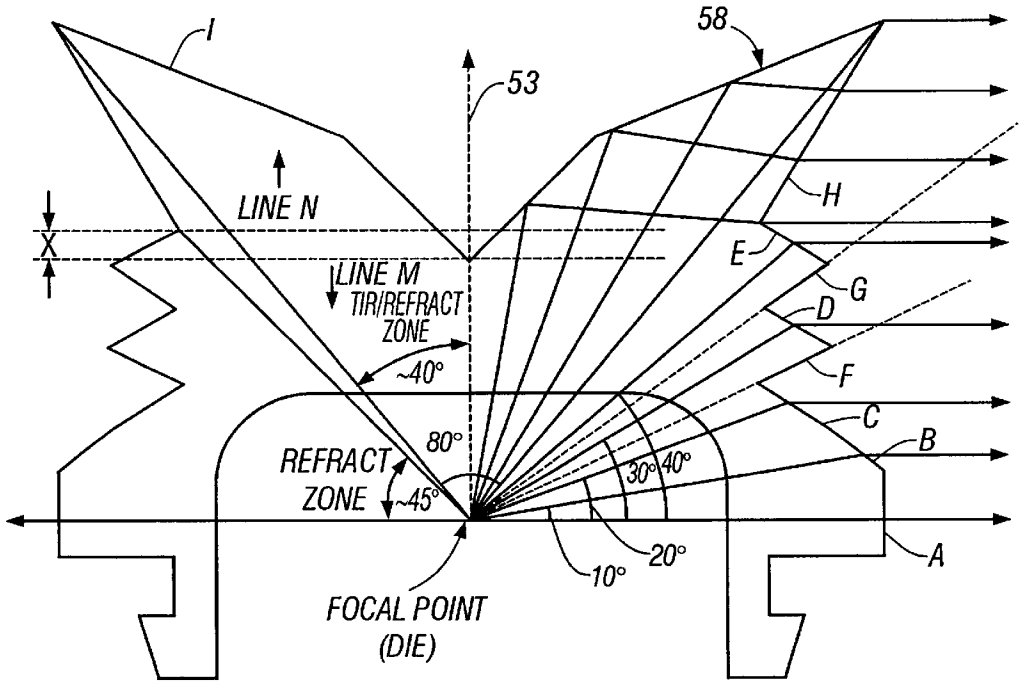
I
58
53
LINE N
X
LINE M
TIR/REFRACT
ZONE
~40°
80°
REFRACT
ZONE
~45°
30°
40°
20°
10°
H
E
G
D
F
C
B
A
FOCAL POINT
(DIE)

FIG. 5F

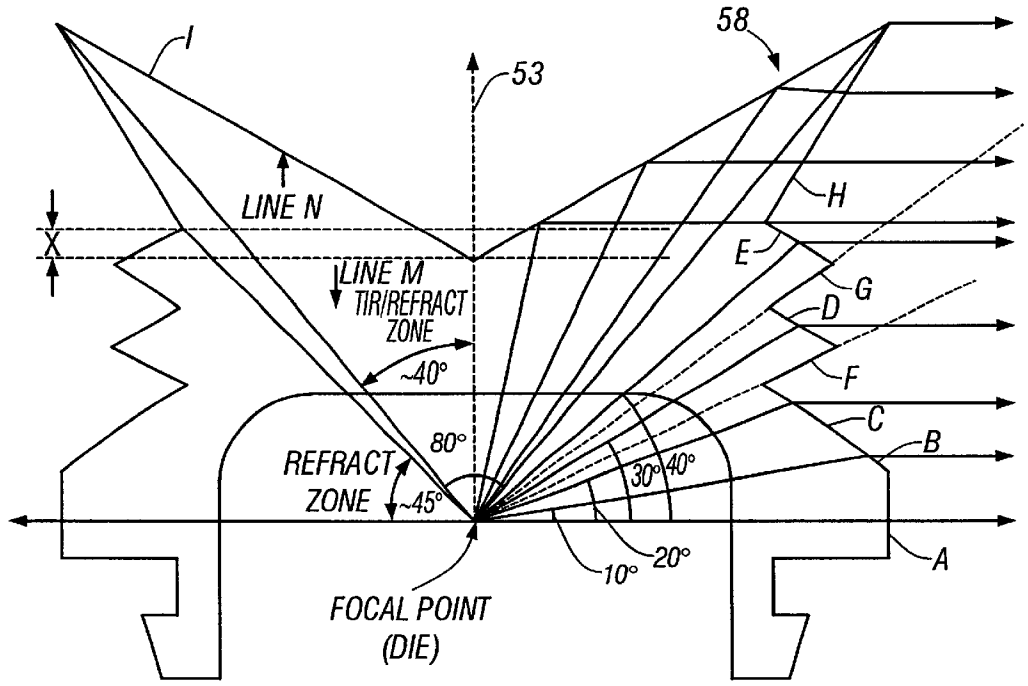
I
58
53
LINE N
X
LINE M
TIR/REFRACT
ZONE
~40°
80°
REFRACT
ZONE
~45°
30°
40°
20°
10°
H
E
G
D
F
C
B
A
FOCAL POINT
(DIE)

FIG. 5G

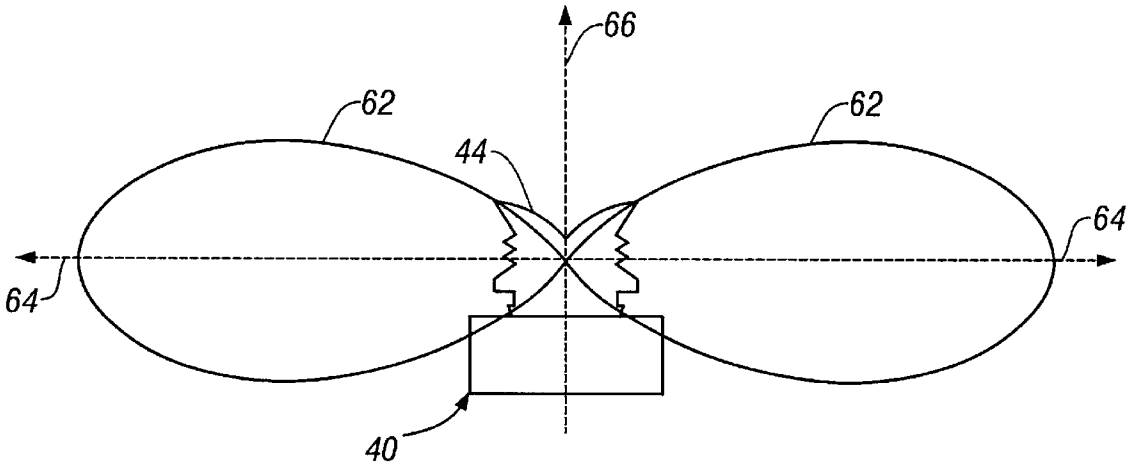

FIG. 6

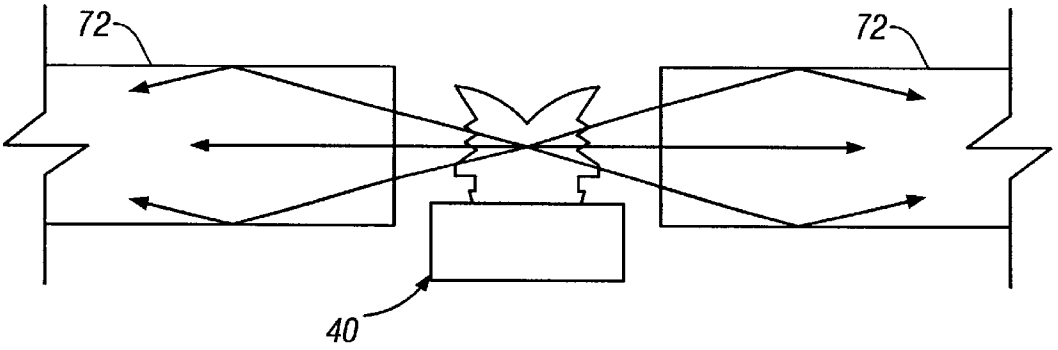

FIG. 7A

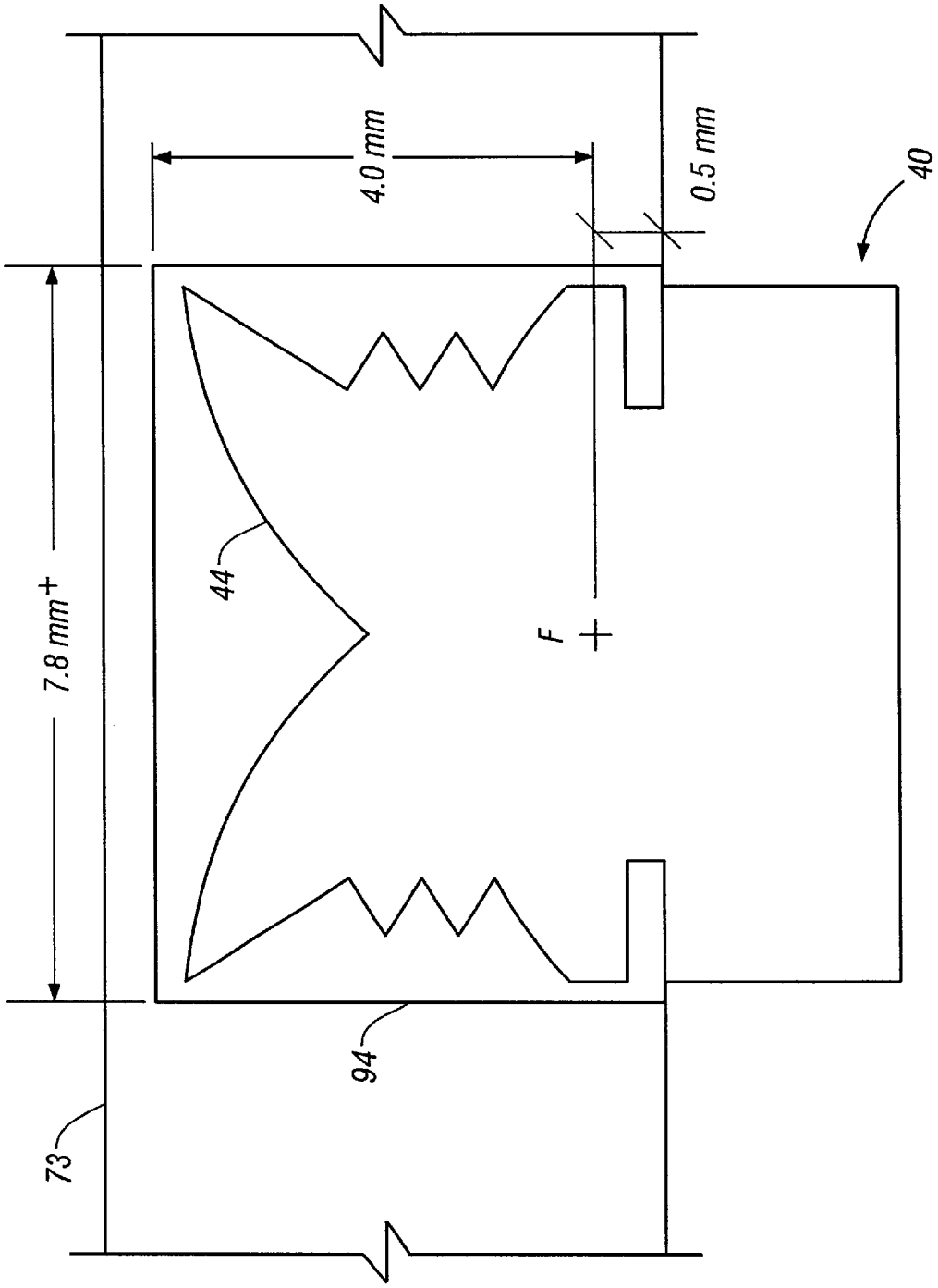

FIG. 7B

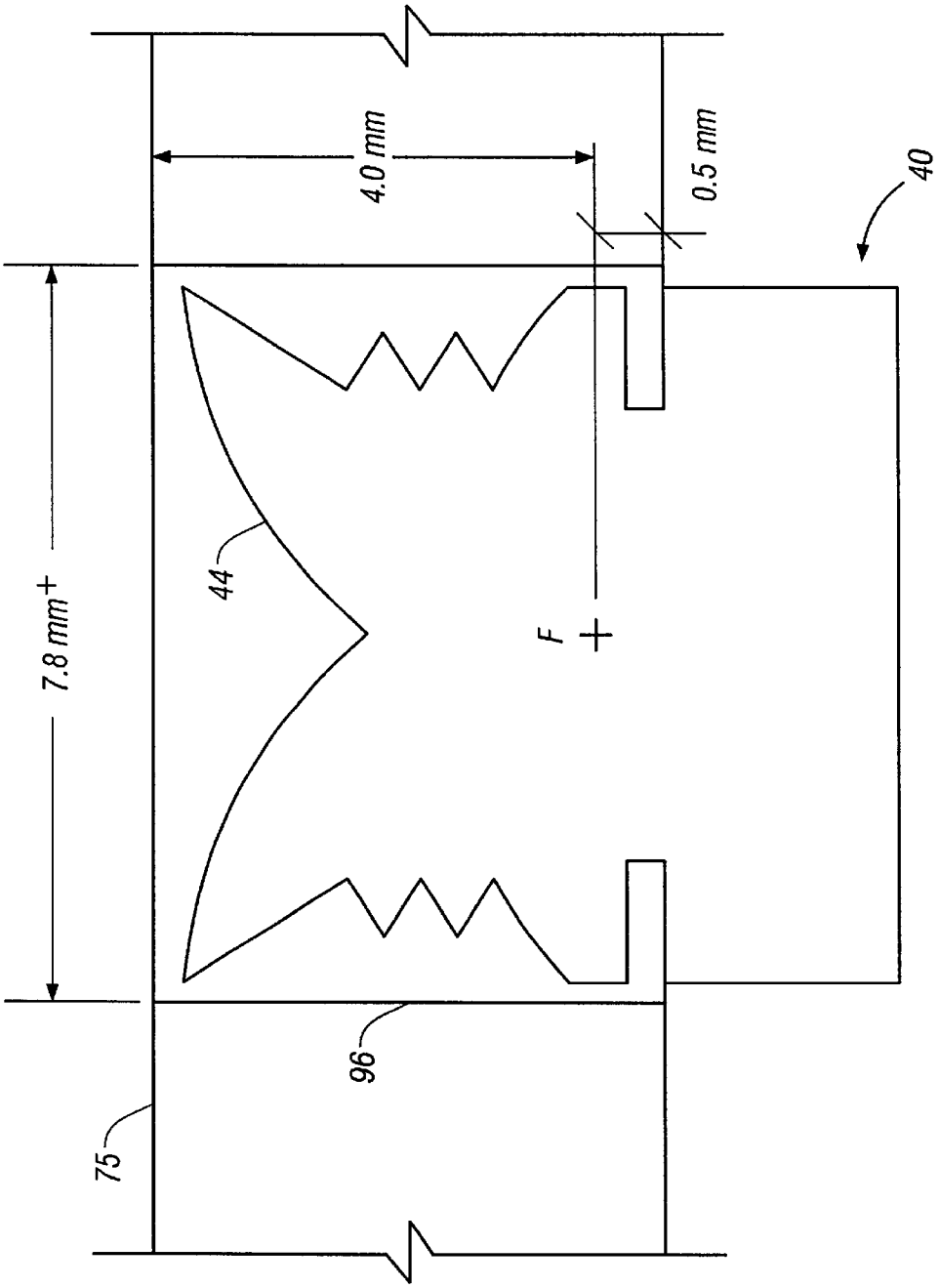

FIG. 7C

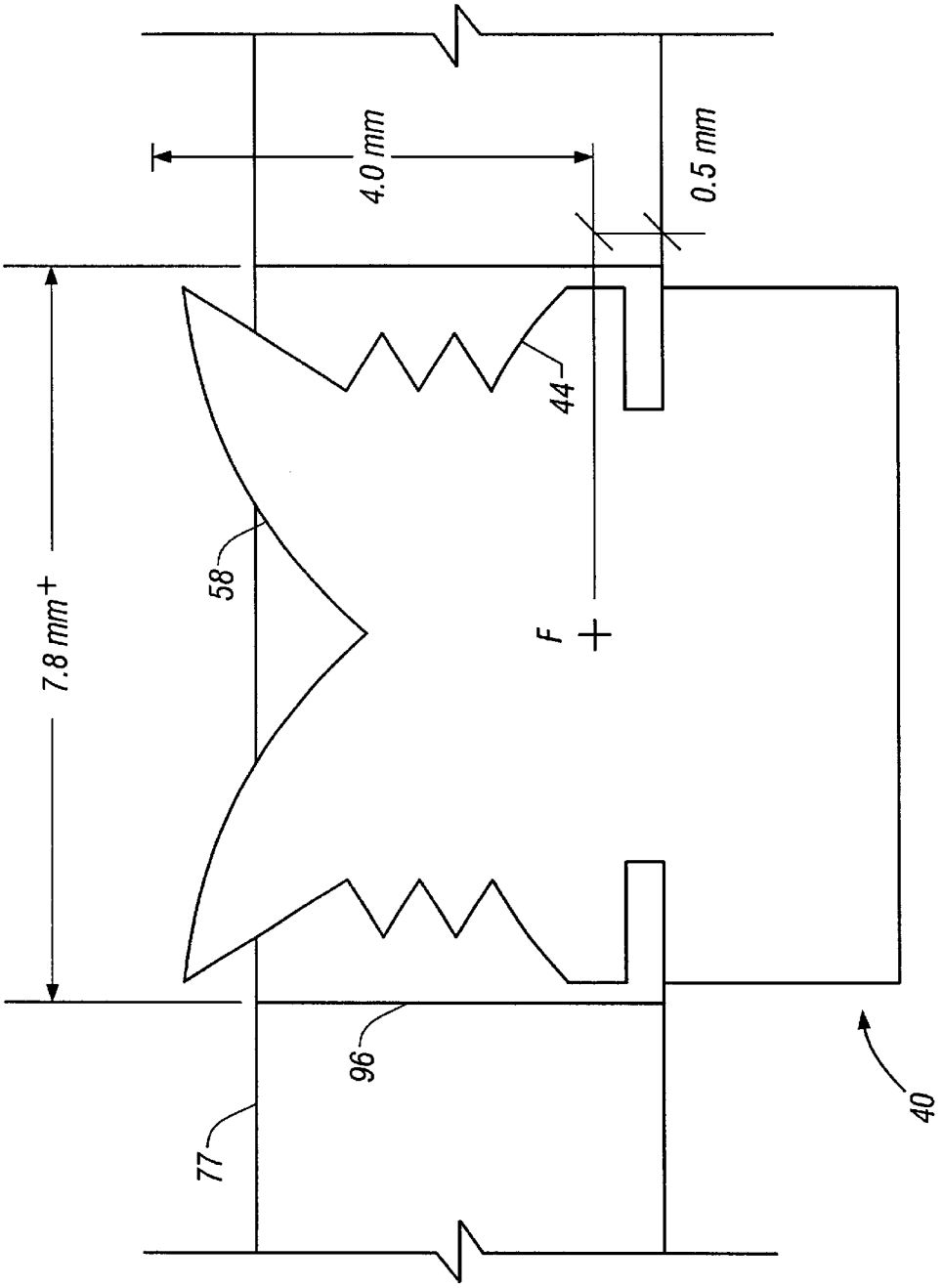

FIG. 7D

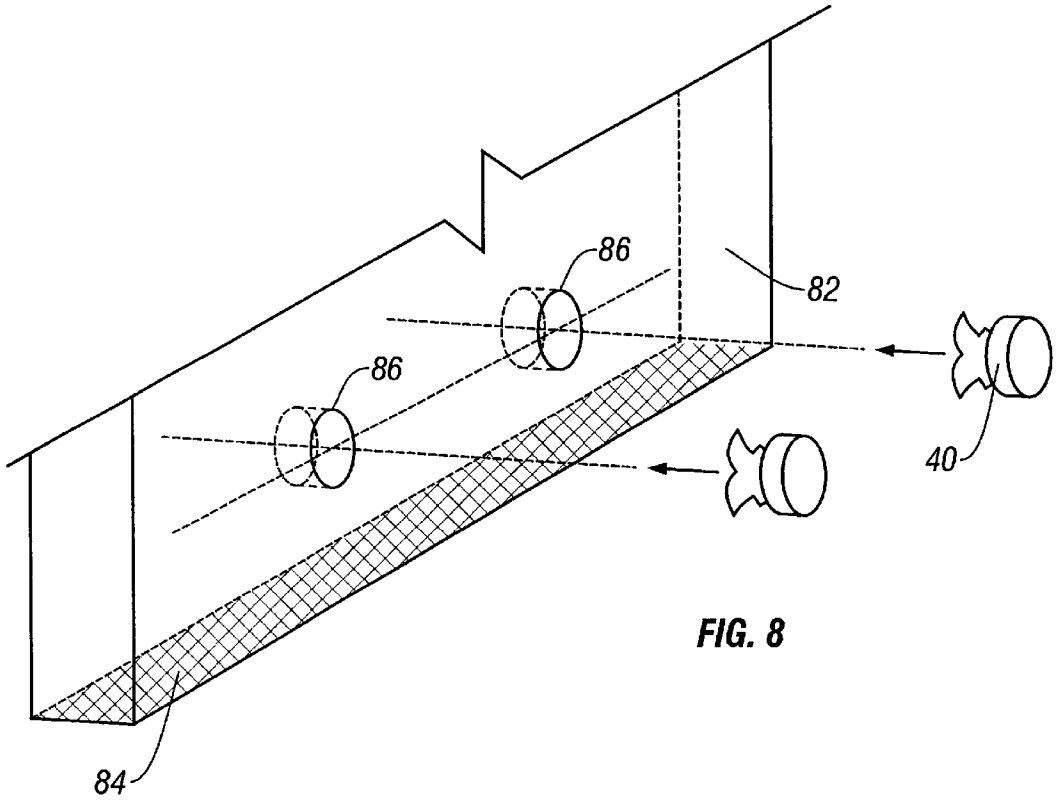

FIG. 8

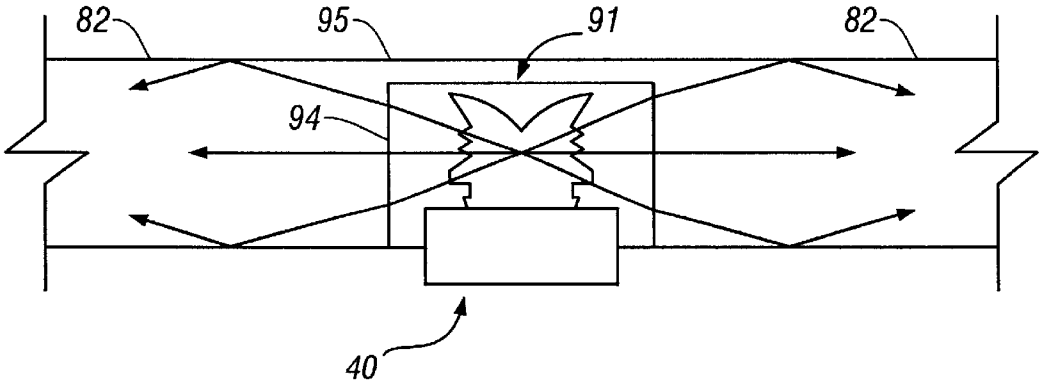

FIG. 9A

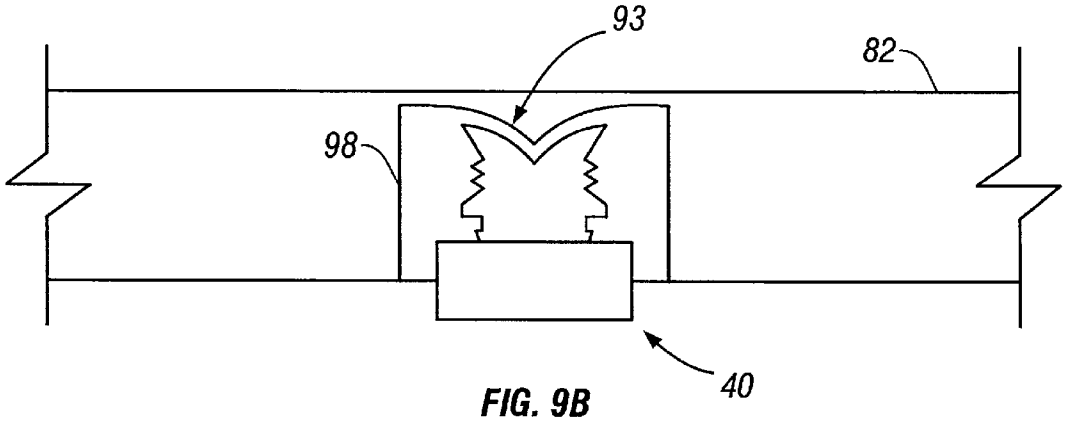

FIG. 9B

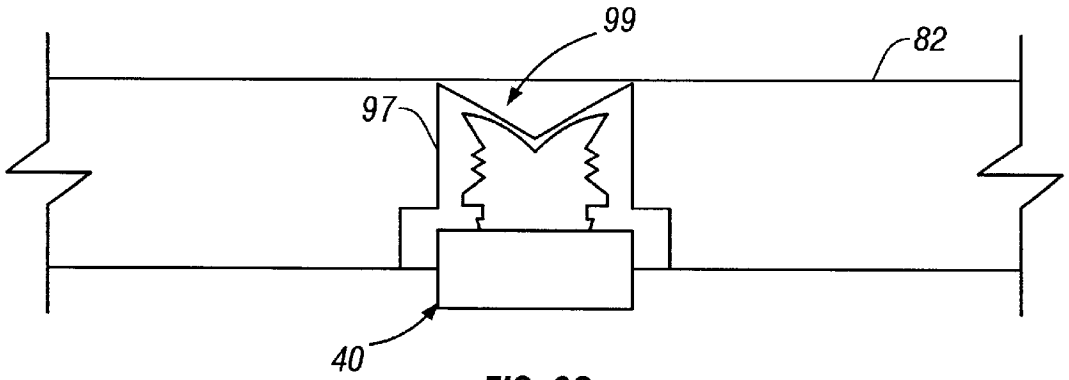

FIG. 9C

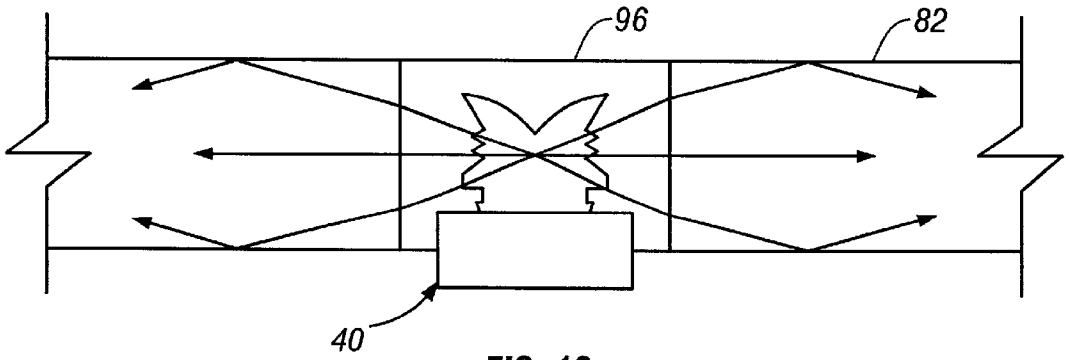

FIG. 10

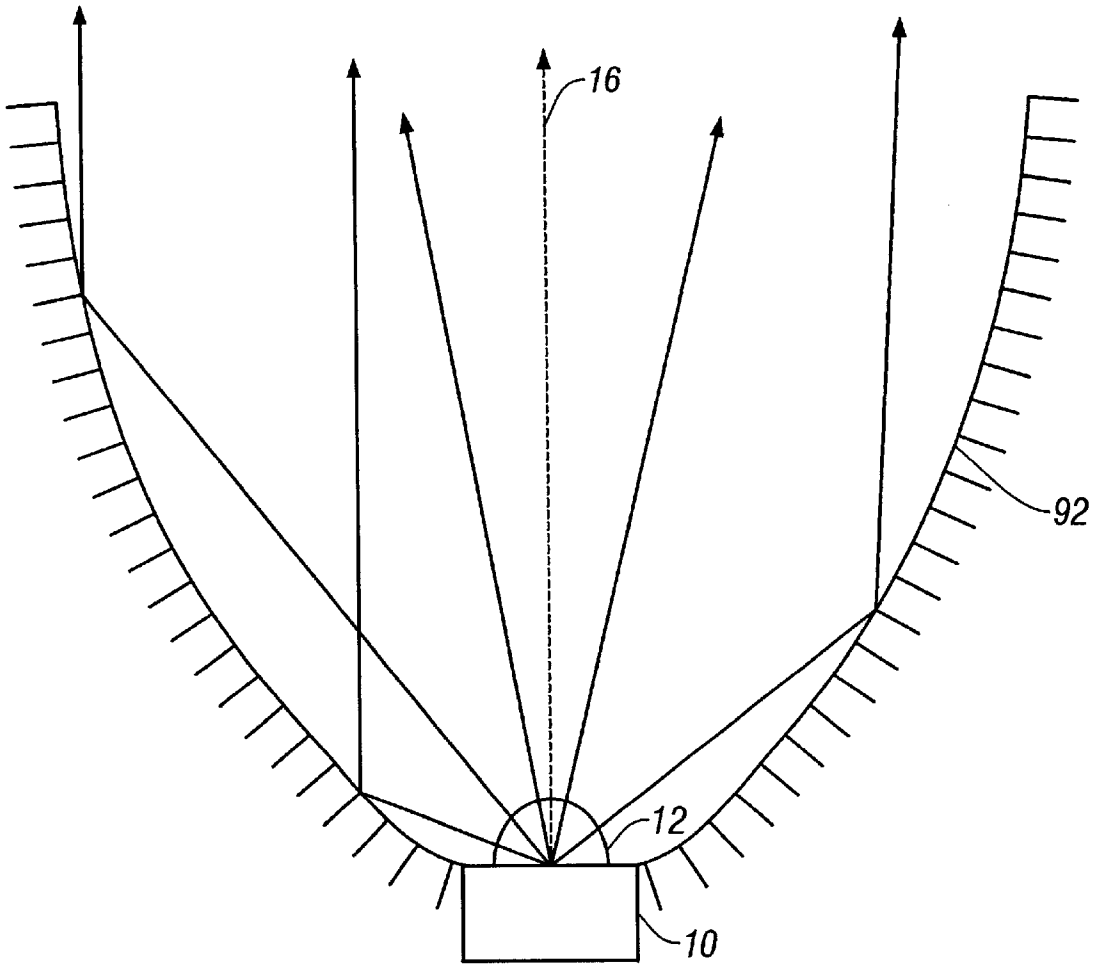

FIG. 11
(Prior Art)

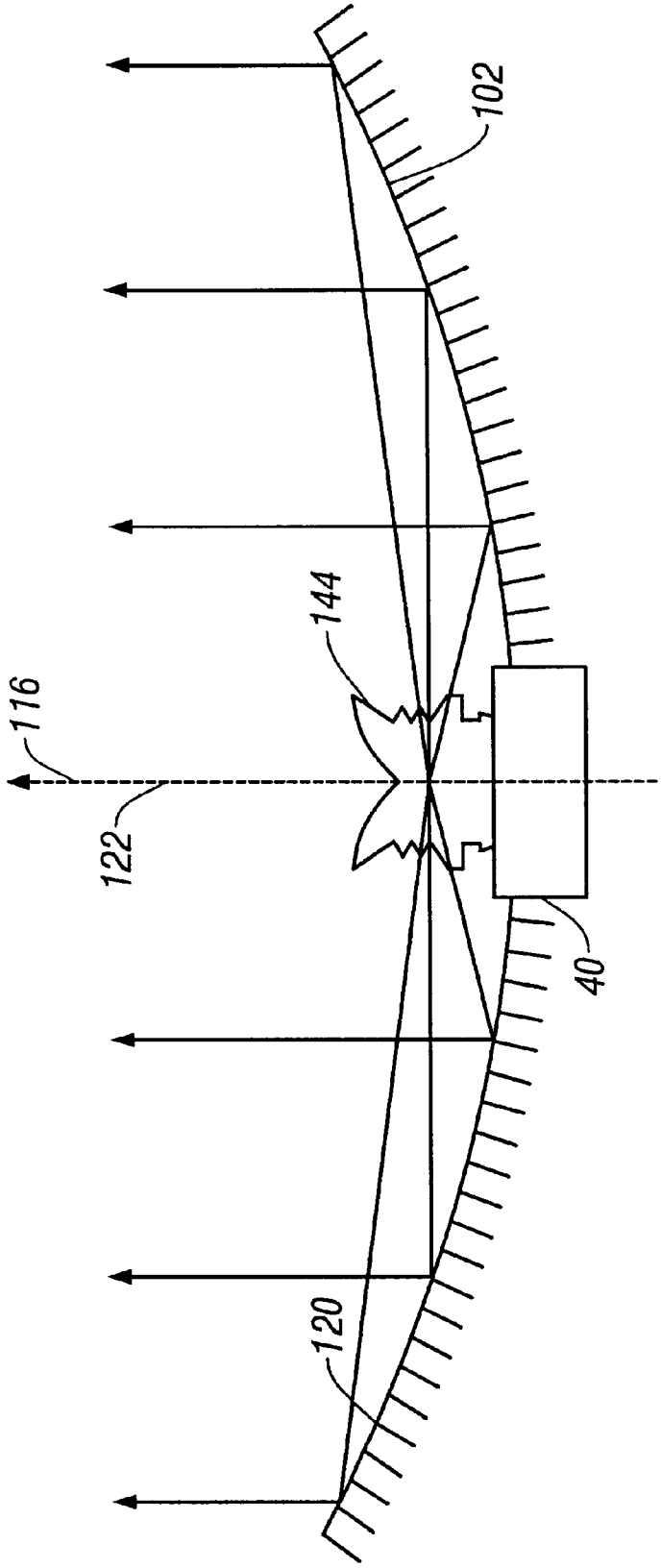

FIG. 12

LENS AND LENS CAP WITH SAWTOOTH PORTION FOR LIGHT EMITTING DIODE

RELATED APPLICATION

This invention is related to Ser. No. 09/849,042, filed May 4, 2001, entitled SIDE EMITTING LED.

BACKGROUND OF THE INVENTION

1. Field of the Invention

This invention relates generally to light emitting devices and more particularly to side emitting light emitting diodes (LEDs).

2. Description of Related Art

FIG. **1**A illustrates a conventional LED package **10**. LED package **10** has a hemispherical lens **12** of a type well-known in the art. Package **10** may also have a reflector cup (not shown), in which an LED chip (not shown) resides, that reflects light emitted from the bottom and sides of the LED chip toward the observer. In other packages, other types of reflectors reflect the LED chip's emitted light in a particular direction.

Lens **12** creates a field of illumination **14** roughly along a longitudinal package axis **16** of LED package **10**. The vast majority of light emitted from an LED package **10** with a hemispherical lens **12** is emitted upwards away from LED package **10** with only a small portion emitted out from the sides of LED package **10**.

FIG. **1**B illustrates a known light emitting diode (LED) package **30** with a longitudinal package axis **26**. LED package **30** includes an LED chip **38**, a lens **32** with straight vertical sidewall **35** and a funnel-shaped top surface **37**. There are two main paths in which the light will travel through package **30**. The first light path P**1** is desirable with the light emitted from chip **38** and traveling to surface **37** where total internal reflection (TIR) causes the light to exit through sidewall **35** at approximately 90 degrees to the longitudinal axis. The second light path P**2** is light emitted from chip **38** towards sidewall **35** at an angle causing TIR or a reflection from sidewall **35** causing the light to exit package **30** at an angle not close to perpendicular to the longitudinal axis. This path is not desirable and limits the efficiency of side extracted light.

FIG. **2** illustrates the conventional LED package **10** of FIG. **1** coupled along an edge of a portion of a refractive light guide **20**. LED package **10** is positioned on the edge of light guide **20** along the width of light guide **20**. Light rays R**1**, R**2**, R**3** emitted by LED package **10** are propagated along the length of light guide **20**. FIG. **3** illustrates a plurality of conventional LED packages **10** positioned along the width of light guide **20** of FIG. **2**. These conventional LED/light guide combinations are inefficient as they require a large number of LED packages **10** to illuminate the light guide and result in coupling inefficiencies due to relatively small acceptance angles. These conventional LED packages **10** must be arranged along the entire length of one side of light guide **20** to fully illuminate light guide **20**.

A need exists for an LED package to couple efficiently to shallow reflectors and thin light guides. A need also exists for an LED package to allow these secondary optical elements to have relatively large illuminated areas.

SUMMARY OF THE INVENTION

Light emitting devices with side emission of light allow light guides and reflectors to have very thin profiles with large illuminated areas.

In accordance with one embodiment of the invention, a lens includes a body. The body further includes a central axis running along a length of the body and a first surface for coupling to a light source. There is also a sawtooth lens portion which refracts light emitted from the light source such that a majority of light emitted from the sawtooth lens portion is generally perpendicular to the central axis of the body. Additionally, there is a funnel-shaped lens portion connected to the sawtooth lens portion where the funnel-shaped lens portion reflects light emitted from the light source such that a majority of light emitted from the funnel-shaped lens portion is generally perpendicular to the central axis of the body.

In accordance with another embodiment of the invention, a lens cap attachable to a light source includes a body. The body further includes a central axis running along a length of said body and a first surface for coupling to a light source. There is also a sawtooth lens portion which refracts light emitted from the light source such that a majority of light emitted from the sawtooth lens portion is generally perpendicular to the central axis of the body. Additionally, a funnel-shaped lens portion is connected to the sawtooth lens portion where the funnel-shaped lens portion reflects light emitted from the light source such that a majority of light emitted from the funnel-shaped lens portion is generally perpendicular to the central axis of the body. There is also an attachment means for coupling the lens cap to the light source where the attachment means is coupled to the sawtooth lens portion.

This invention will be more fully understood in light of the following detailed description taken together with the accompanying drawings.

BRIEF DESCRIPTION OF THE DRAWINGS

FIG. **1**A illustrates a conventional LED package.

FIG. **1**B illustrates another conventional LED package.

FIG. **2** illustrates a cross-sectional view of a conventional edge-illuminated light guide.

FIG. **3** illustrates a perspective view of the light guide of FIG. **2**.

FIG. **4** illustrates one embodiment of the invention.

FIG. **5**A illustrates a cross-sectional view of the LED package of FIG. **4**.

FIG. **5**B illustrates a cross-sectional view of the lens mating to the housing of the LED package base.

FIG. **5**C illustrates a close-up of the lens/housing mating of FIG. **5**B.

FIG. **5**D illustrates a cross-sectional view of a lens cap mating to an LED package.

FIG. **5**E illustrates ray-traces of one embodiment of a lens.

FIG. **5**F illustrates ray-traces of another embodiment of a lens.

FIG. **5**G illustrates ray-traces of a further embodiment of a lens.

FIG. **6** illustrates side-emission of light from the LED package of FIG. **4**.

FIG. **7**A illustrates a cross-sectional view of the side-emission of light from the LED package of FIG. **4** into two light guides.

FIG. **7**B illustrates a cross-sectional view of the side-emission of light from the LED package of FIG. **4** into a light guide.

FIG. **7**C illustrates a cross-sectional view of the side-emission of light from the LED package of FIG. **4** into a light guide.

FIG. 7D illustrates a cross-sectional view of the side-emission of light from the LED package of FIG. 4 into a light guide.

FIG. 8 illustrates a perspective view of a light guide.

FIG. 9A illustrates a cross-sectional view of the LED package of FIG. 4 mounted in a blind-hole of a light guide.

FIG. 9B illustrates a cross-sectional view of the LED package of FIG. 4 mounted in a blind-hole of a light guide.

FIG. 9C illustrates a cross-sectional view of the LED package of FIG. 4 mounted in a blind-hole of a light guide.

FIG. 10 illustrates a cross-sectional view of the LED package of FIG. 4 mounted in a through-hole of a light guide.

FIG. 11 illustrates a conventional LED package coupled to a reflector.

FIG. 12 illustrates the LED package of FIG. 4 in combination with a shallow reflector.

Use of the same reference symbols in different figures indicates similar or identical items.

DETAILED DESCRIPTION OF THE PREFERRED EMBODIMENTS

FIG. 4 illustrates an example of a side emitting LED package **40** in accordance with one embodiment of the invention. LED package **40** includes a longitudinal package axis **43**, an LED package base **42** and a lens **44**. Lens **44** is coupled to LED package base **42**. Longitudinal package axis **43** passes through the center of LED package base **43** and lens **44**. As seen in FIG. 5A, a surface of LED package base **42** supports an LED chip **52** (a semiconductor chip having a light emitting pn junction) for generating light. LED chip **52** may be one of any number of shapes, including but not limited to a truncated inverted pyramid (TIP) (shown), cube, rectangular solid, or hemisphere. LED chip **52** includes a bottom surface that may be in contact with, or coated with, a reflective material. Although LED chip **52** may emit light from all of its sides, base **42** is generally configured to reflect emitted light upwards towards lens **44** along the longitudinal axis of the package. Such packages are conventional and may include a parabolic reflector in which LED chip **52** resides on a surface of package base **42**. One such package is shown in U.S. Pat. No. 4,920,404, assigned to the present assignee and incorporated herein by reference.

Lens **44** may be manufactured as a separate component using a number of well-known techniques such as diamond turning (i.e., the lens is shaped by a lathe with a diamond-bit), injection molding, and casting. Lens **44** is made of a transparent material, including but not limited to cyclic olefin copolymer (COC), polymethylmethacrolate (PMMA), polycarbonate (PC), PC/PMMA, and polyetherimide (PEI). Lens **44** includes an index of refraction (n) ranging from between 1.45 to 1.6, preferably 1.53, but could have an index of refraction higher or lower based on the material used. In the alternative, lens **44** may be formed onto LED package base **42** and LED chip **52** by various techniques including but not limited to injection molding (e.g., insert molding) and casting.

There is a volume **54** between lens **44** and LED chip **52**. Volume **54** may be filled and sealed to prevent contamination of LED **52** using silicone. Volume **54** may also be in a vacuum state, contain air or some other gas, or filled with an optically transparent resin material, including but not limited to resin, silicone, epoxy, water or any material with an index of refraction in the range of 1.4 to 1.6 may be injected to fill volume **54**. The material inside volume **54** may be colored to act as a filter in order to allow transmission of all or only a portion of the visible light spectrum. If silicone is used, the silicone may be hard or soft. Lens **44** may also be colored to act as a filter.

Lens **44** includes a sawtooth, refractive portion **56** and a total internal reflection (TIR) funnel portion **58**. The sawtooth portion **56** is designed to refract and bend light so that the light exits from lens **44** as close to 90 degrees to the longitudinal package axis **43** as possible. The sawteeth or refractive surfaces **59** of the sawtooth portion **56** are all light transmissive. Any number of sawteeth **59** may be used within a sawtooth portion of a given length; preferably there is at least one sawtooth. Lens **44** may be formed as a single piece or, in the alternative, as separate components coupled together.

Funnel portion **58** is designed as a TIR surface. The TIR surface reflects light such that light exits from lens **44** as close to 90 degrees to a longitudinal package axis **43** of LED package **40** as possible. Approximately 33% of the light emitted from LED chip **52** is reflected off the TIR surface of funnel-shaped portion **58** of lens **44**. A metallization layer (e.g., aluminum) may be placed on top of funnel portion **58** to prevent light transmission through the TIR surface. A coating or film (e.g., a U.V. inhibitor) may be placed on top of the funnel portion **58** to prevent degradation of the lens as PC degrades in the presence of U.V. light.

The interface between lens **44** and LED package base **42** may also be sealed using any well-known sealant, such as Room Temperature Vulcanizing (RTV) or the like.

FIG. 5B illustrates a cross-sectional view of alternative mating of lens **44** to housing **46** of LED package base **42**. For clarity, LED chip **52** and other features of base **42** are not shown. Lens **44** may also be attached to LED package base **42** by various attachment methods, including but not limited to snap-fitting, friction-fitting, heat staking, adhesive bonding, and ultra-sonic welding. The features of lens **44**, as shown in FIG. 5B, are applicable to lenses that are either formed as a separate component or encapsulated onto LED package base **42**. FIG. 5C illustrates a close-up of the lens/housing mating of FIG. 5B. Surface S may snap fit into surface R. Surface S may friction fit tight with surface R. Surface T may be welded to surface U using various methods including, without limitation, plastic welding, sonic welding, and linear welding. Sealing or bonding involves several possible combinations, such as surface S and/or T of lens **44** being sealed/bonded to surface R and/or U of housing **46**.

FIG. 5D illustrates a cross-sectional view of a lens cap **55** mating to a conventional LED package **10** with a hemispherical lens **12**. Lens cap **55** may be affixed to lens **12** of LED package **10** by an optical adhesive. Lens cap **55** includes sawtooth, refractive portion **56** and reflective funnel portion **58** that contain the same and/or similar features that operate in the same and/or similar manner, as described above and below, as refractive and TIR portions **56**, **58** of lens **44**.

FIGS. 5E, 5F and 5G illustrates ray-traces of light through lenses of various curvatures on the top surface of the lens. The features shown in FIGS. 5E–5G are applicable to lenses that are injection molded, cast or otherwise formed. Approximately 33% of the light emitted from LED chip **52** (not shown; light is shown emitted from die focal point F) is reflected off the TIR surface I. FIG. 5E illustrates a curved funnel-shaped portion **58** where Surface I is defined from a curve that maintains an angle greater than the critical angle for TIR but directs the light out of the lens roughly at 90

degrees to longitudinal package axis **53**. FIG. **5**F illustrates a bent-line funnel-shaped portion **58** where Surface I is defined from a line bent into two linear portions, each portion at an angle greater than the critical angle for TIR but directs the light out of the package roughly at 90 degrees to the package axis. FIG. **5**G illustrates a linear funnel-shaped portion **58** where Surface I is defined by a straight line at an angle greater than the critical angle for TIR but directs the light out of the package roughly at 90 degrees to the package axis.

In FIGS. **5**E–**5**G, Surface H works with surface I to emit light perpendicular to longitudinal package axis **53**. The angle defined by surface I relative to the die is roughly 80 degrees. Surfaces A, B, C, D & E have surface normals such that the incident light ray is refracted out of the lens at approximately 90 degrees to the longitudinal package axis **53**. Surfaces F, G & H are approximately parallel to direct incident light rays in order to minimize the amount of direct light transmitted through these surfaces. Surfaces below line N refract light out of the package. Surfaces above line M will direct light out of the lens through a combination of TIR and refraction. Lines M & N need to be in close proximity of each other to optimize side emission and minimize emission in the longitudinal direction. FIGS. **5**E–**5**G show two zones: zone refraction at approximately 45 degrees or more from longitudinal package axis **53** and zone TIR/refraction at up to approximately 45 degrees from longitudinal package axis **53**. For example, in FIGS. **5**E–**5**G, an approximately 40 degree TIR/refraction zone is shown. The interface between the two zones is approximately 45 degrees from the longitudinal package axis **53**. A distance X between Line M and Line N is kept at a minimum in order to optimize the side extraction of light from the lens. Line M may equal Line N (i.e., X=0).

FIG. **6** illustrates a cross-section of the emission of light from LED package **40** of FIG. **4**. Lens **44** of LED package **40** creates a radiation pattern **62** roughly perpendicular to longitudinal package axis **66** of LED package **40**. In FIG. **6**, this radiation pattern **62** is approximately perpendicular to LED package axis **66** and illustrates relative light intensity and distribution. This field of illumination **62** surrounds LED package **40** and is roughly disk-or toroidal-shaped. Light is emitted from lens **44** approximately parallel to an optical plane **64**.

The side-emission of light allows even a single LED package **40** to illuminate multiple light guides **72**, as seen in FIG. **7**. For example, FIG. **7**A, illustrates two planar light guides placed nearly end-to-end with space for at least one LED package **40** between light guides **72**. The side-emission of light from the LED package **40** allows light to enter each light guide **72**. The LED package **40** may also be inserted into the body of light guide **72**. Light guides of various shapes may be used. The sides along the length of the light guides may be planar or taper. For example, a single side emitting LED package **40** may be placed at the center of a disk-shaped light guide (not shown). As light is emitted from the side of LED package **40** in 360 degrees (i.e., in all directions from the center of LED package **40**), the light enters the light guide and is refracted and reflected throughout the entire light guide (not shown).

The light guide can be made from optically transmissive materials, including but not limited to PC or PMMA. The light guide may be of constant thickness or tapered. Side emission of light allows efficient illumination of thin light guides with a thickness in the optimum range of 2 to 8 mm. FIG. **7**B illustrates an example of a light guide **73** with a thickness of 5.0 mm which is greater than the height of lens **44**. As the thickness of light guide **73** is greater than the height of the lens **44**, a blind-hole **94** may be used in light guide **73** to allow coupling of the LED package **40**. The dimensions of lenses **44** of FIGS. **7**B, **7**C & **7**D are measured from the focal point F of lens **44**. FIG. **7**C illustrates an example of a light guide **75** with a thickness of 4.5 mm and equal to the height of lens **44**. As the thickness of light guide **75** is equal to the height of lens **44**, a through-hole **96** may be used in light guide **75** to allow coupling of LED package **40**. FIG. **7**D illustrates side-emission of light from the LED of FIG. **4** into a light guide **77** thinner than the height of lens **44**. As the thickness of light guide **77** is less than the height of lens **44**, a through-hole **96** must be used in the light guide **77** to allow coupling of LED package **40**. Even though light guide **77** is thinner than the height of lens **44**, a large portion of the light emitted from LED chip **52** will still be directed into light guide **77** as the bulk of the light emitted from LED chip **52** is emitted from the sides of lens **44**. The large portion of the light emitted from lens **44** is targeted toward a light guide **77** that is positioned midway up the height of the lens. For example, the light emitted out the side of lens **44** near the top will be directed slightly downward and the light emitted out the side of lens **44** near the bottom will be directed slightly upward. The portion of light directed into light guide **77** decreases as the thickness of light guide **77** relative to lens **44** decreases. Light guide **77** may be any shape including, without limitation, straight, tapered, rectangular, round or square.

FIG. **8** illustrates a perspective view of an end-portion of a planar light guide **82**. The side emitting LED package **40** allows LED package **40** to be placed inside light guide **82**. One or more holes **86** are made in the body of light guide **82** with a corresponding number of LED assemblies **40** placed within holes **86**. Holes **86** may be made to any desired depth in light guide **82**, including but not limited to the entire thickness of light guide **82**. Lens **44** of LED package **40** may not touch light guide **82**. A reflective coating or film **84** may be placed on at least one of the ends of light guide **82** to increase the internal illumination of light guide **82**.

FIG. **9**A illustrates a side-emitting LED package **40** mounted in a blind-hole **94** of a planar light guide **82**. Top surface **91** of blind-hole **94** is approximately parallel with top surface **95** of planar light guide **82**. Top surface **91** of blind-hole **94** may be coated with a reflective coating or film to reflect light in order to allow for a thinner light guide package with a similar coupling efficiency.

FIG. **9**B illustrates a side-emitting LED package **40** mounted in a funnel-shaped blind-hole **98** of a planar light guide **82**. The top surface **93** of funnel-shaped blind-hole **98** is approximately parallel with funnel-shaped portion **58** of lens **44** of LED package **40**. Top surface **93** of blind-hole **98** may be coated to reflect light in order to allow for a thinner light guide package with a similar coupling efficiency. The blind hole can have a flat, funnel or curved surface to assist with redirecting light emitted from the LED into the light guide.

FIG. **9**C illustrates a side-emitting LED package **40** mounted in a v-shaped blind-hole **97** of a planar light guide **82**. The v-shaped top surface **99** of the blind-hole **97** is approximately parallel with funnel-shaped portion **58** of lens **44** of LED package **40**. The blind hole can have a flat, funnel or curved surface to assist with redirecting light emitted from the LED into the light guide. The top surface **99** of blind-hole **97** may be coated to reflect light in order to allow for a thinner light guide package with a similar coupling efficiency.

FIG. **10** illustrates a side-emitting LED package **40** mounted in a through-hole **96** of a planar light guide **82**.

Through-hole **96** allows LED package **40** to be mounted approximately perpendicular with light guide **82**.

FIG. **11** illustrates a conventional LED/reflector arrangement. It is known to use an LED package **10** with a hemispherical lens **12** in combination with a deep reflector **92**. The deep shape of the cavity of reflector **92** collimates light emitted from the hemispherical lens **12** of LED package **10**. This deep reflector cavity is required to control the light.

As seen in FIG. **12**, a shallow, large-area reflector **102** can be used in combination with a side-emitting LED package **40** to emit light over a broader area than a conventional LED package **10**. The longitudinal package axis **116** of the lens is approximately parallel to a radial axis **122** of reflector **102**. The side-emission of light allows the walls of reflector **102** to be less deep than conventional reflectors **92** (FIG. **11**). Light is emitted from lens **144** roughly perpendicular to longitudinal package axis **116** of LED package **40**. Side-emitting LED package **40** allows for very high collection efficiencies with shallow large area reflectors compared to conventional LEDs. Shallow reflectors **102** collimate emitted light over a broader area than narrow, deep reflectors **92** used in combination with conventional LED assemblies **10**. Shallow, large-area reflector **102** may be made of BMC bulk molding compound, PC, PMMA, PC/PMMA, and PEI. A reflective film **120** covering the inside of reflector **102** could be metallized, sputtered, or the like with highly reflective materials including, without limitation, aluminum (AL), NiCr, and nickel chrome. Side-emitting LEDs can achieve higher collection efficiencies with deep or shallow reflectors than the conventional LED/deep reflector combination.

The above-described embodiments of the present invention are merely meant to be illustrative and not limiting. It will thus be obvious to those skilled in the art that various changes and modifications may be made without departing from this invention in its broader aspects. Therefore, the appended claims encompass all such changes and modifications as falling within the true spirit and scope of this invention.

We claim:

1. A lens cap attachable to a light source, comprising:

a body comprising

a central axis running along a length of said body;

a first surface for coupling to a light source;

a sawtooth lens portion whereby the sawtooth lens portion refracts light emitted from said light source such that a majority of light emitted from the sawtooth lens portion is generally perpendicular to said central axis of the body;

a funnel-shaped lens portion connected to the sawtooth lens portion whereby the funnel-shaped lens portion reflects light emitted from the light source such that a majority of light emitted from the funnel-shaped lens portion is generally perpendicular to the central axis of the body; and

an attachment means for coupling the lens cap to the light source whereby said attachment means is coupled to the sawtooth lens portion.

2. The lens cap of claim **1**, wherein the first surface is perpendicular to the central axis.

3. The lens cap of claim **1**, wherein the lens is formed by diamond turning.

4. The lens cap of claim **1**, wherein the lens is formed by injection molding.

5. The lens cap of claim **1**, wherein the lens is formed by casting.

6. The lens cap of claim **1**, wherein the lens has an index of refraction in the range of 1.45 to 1.6.

7. The lens cap of claim **1**, wherein the lens has an index of refraction of approximately 1.53.

8. The lens cap of claim **1**, wherein the lens is made of a material selected from the group consisting of PC, PMMA, PEI, PC/PMMA and COC.

9. The lens cap of claim **1**, wherein the lens is attached to the light source with an optical adhesive located between the lens and the light source.

10. The lens cap of claim **9**, wherein the light source is an LED package and the first surface is shaped to couple with a lens of said LED package.

11. The lens cap of claim **10**, wherein a lens of the LED package is hemispherical in shape.

12. The lens cap of claim **1**, wherein the lens is attached to an LED with an index-matched, non-adhesive material located between the lens and the light source.

13. The lens cap of claim **1**, wherein the lens is attached to an LED by external means with air occupying a volume located between the lens and the light source.

14. The lens cap of claim **1**, wherein a reflective surface of the funnel-shaped lens portion comprises a curved portion that curves away from the central axis of the body such that a curved v-shape is formed about the central axis when the curved portion is swept about the central axis.

15. The lens cap of claim **1**, wherein a reflective surface of the funnel-shaped lens portion comprises a linear portion angled away from the central axis of the body such that a v-shape is formed about the central axis when the linear portion is swept about the central axis.

16. The lens cap of claim **1**, wherein a reflective surface of the funnel-shaped lens portion comprises at least two connected linear portions angled with respect to each other and away from the central axis of the body such that a v-shape is formed about the central axis when the at least two connected linear portions are swept about the central axis.

17. A lens comprising:

a bottom surface;

a reflecting surface; and

a refracting surface obliquely angled with respect to a central axis of the lens;

wherein light entering the lens through the bottom surface and directly incident on the reflecting surface is reflected from the reflecting surface to the refracting surface and refracted by the refracting surface to exit the lens in a direction substantially perpendicular to the central axis of the lens.

18. The lens of claim **17**, wherein the bottom surface is perpendicular to the central axis.

19. The lens of claim **17**, wherein the reflecting surface reflects by total internal reflection.

20. The lens of claim **17**, wherein the reflecting surface is a surface of a funnel-shaped portion of the lens.

21. The lens of claim **17**, further comprising a second refracting surface, wherein light entering the lens through the bottom surface and directly incident on the second refracting surface is refracted by the second refracting surface to exit the lens in a direction substantially perpendicular to the central axis.

22. The lens of claim **17**, wherein the second refractive surface is a surface of a saw tooth portion of the lens.

23. The lens of claim **17**, wherein the reflecting and refracting surfaces are each portions of surfaces having cylindrical symmetry about the central axis.

24. A lens, comprising:

a body comprising

a central axis running along a length of the body;

a first surface for coupling to a light source;

a sawtooth lens portion whereby the sawtooth portion refracts light emitted from the light source such that a majority of light emitted from the sawtooth lens portion is generally perpendicular to the central axis of the body;

a funnel-shaped lens portion connected to the sawtooth lens portion whereby the funnel-shaped lens portion reflects light emitted from the light source such that a majority of light emitted from the funnel-shaped lens portion is generally perpendicular to the central axis of the body; and

wherein the lens has an index of refraction in the range of 1.45 to 1.6.

25. The lens of claim **24**, wherein the lens has an index of refraction of approximately 1.53.

26. A lens, comprising:

a first surface adapted for coupling to a light source;

a sawtooth portion which refracts light coupled into the lens through the first surface, in a direction perpendicular to a central axis of the lens; and

a funnel-shaped portion which reflects light coupled into the lens through the first surface in a direction perpendicular to the central axis;

wherein the sawtooth portion and the funnel-shaped portion are formed in a single piece of material.

27. The lens of claim **26**, wherein the first surface is perpendicular to the central axis.

28. The lens of claim **26**, wherein the lens is turned.

29. The lens of claim **26**, wherein the lens is molded.

30. The lens of claim **26**, wherein the lens is cast.

31. The lens of claim **26**, wherein the lens has an index of refraction in the range of 1.45 to 1.6.

32. The lens of claim **26**, wherein the lens has an index of refraction of approximately 1.53.

33. The lens of claim **26**, wherein the lens is made of a material selected from the group consisting of PC, PMMA, PEI, PC/PMMA and COC.

34. The lens of claim **26**, further comprising an attachment portion adapted to couple the lens to an LED light source.

35. The lens of claim **26**, wherein the funnel shaped portion curves away from the central axis.

36. The lens of claim **26**, wherein the funnel-shaped portion comprises a linear portion angled away from the central axis.

37. The lens of claim **26**, wherein the funnel-shaped portion comprises two connected linear portions angled with respect to each other and angled away from the central axis.

38. The lens of claim **26**, wherein the first surface further defines a hollow whereby the light source may be at least partially located within the hollow.

39. A lens cap attachable to a light source, comprising:

a first surface adapted for optically coupling to a light source;

a sawtooth portion which refracts light coupled into the lens cap through the first surface, in a direction perpendicular to a central axis of the lens cap;

a funnel-shaped portion which reflects light coupled into the lens through the first surface in a direction perpendicular to the central axis; and

means for mechanically coupling the lens cap to the light source, whereby the means is coupled to the sawtooth portion.

40. The lens cap of claim **39**, wherein the first surface is perpendicular to the central axis.

41. The lens cap of claim **39**, wherein the lens cap is formed by turning.

42. The lens cap of claim **39**, wherein the lens cap is formed by molding.

43. The lens cap of claim **39**, wherein the lens cap is formed by casting.

44. The lens cap of claim **39**, wherein the lens cap has an index of refraction in the range of 1.45 to 1.6.

45. The lens cap of claim **39**, wherein the lens cap has an index of refraction of approximately 1.53.

46. The lens cap of claim **39**, wherein the lens cap is made of a material selected from the group consisting of PC, PMMA, PEI, PC/PMMA, and COC.

47. The lens cap of claim **39**, wherein the lens cap is attached to the light source with an adhesive located between the lens cap and the light source.

48. The lens cap of claim **47**, wherein the light source is an LED in a package and the first surface is shaped to couple with a lens of the LED package.

49. The lens cap of claim **48**, wherein the first surface is hemispherical in shape.

50. The lens cap of claim **39**, wherein the lens cap is attached to an LED light source with an index-matched, non-adhesive material located between the lens cap and the LED light source.

51. The lens cap of claim **39**, wherein the lens cap is attached to an LED light source with air occupying a volume located between the lens cap and the LED light source.

52. The lens cap of claim **39**, wherein the funnel-shaped portion comprises a curved portion that curves away from the central axis.

53. The lens cap of claim **39**, wherein the funnel-shaped portion comprises a linear portion angled away from the central axis.

54. The lens cap of claim **39**, wherein the funnel-shaped portion comprises at least two connected linear portions angled with respect to each other and away from the central axis.

* * * * *