1934PASP...46...18S



# EVAPORATED ALUMINUM FILMS FOR ASTRONOMICAL MIRRORS

By John Strong

It is possible to coat glass mirrors with an aluminum film by means of the evaporation technique. Mirrors so coated possess many properties which silvered mirrors do not, some of which are as follows:

1. The aluminized mirror, if kept dry, will not tarnish.
2. Aluminum is the better reflector for the ultra-violet light.
3. The reflectivity of aluminum, for visible light, is almost as high as that of silver.
4. The aluminum surface may be cleaned of dust, oil, finger marks, etc., by washing with soap and water. The film adheres to the glass with such tenacity that it cannot be removed when Scotch tape is stripped from it. In fact, it has been found possible to rule a grating on the aluminum film.
5. Aluminum films do not scatter light.

These properties make aluminum mirrors of particular value when used in scientific instruments.

There is, unfortunately, no process for the deposition of aluminum on glass from a chemical solution as there is for silver and copper. This is, of course, due to the fact that aluminum is one of the most difficult metals to reduce. It is necessary to electrolyze a solution of aluminum oxide in fused cryolite for the commercial manufacture of the metal.

Besides the method of chemical deposition, there are two methods of coating mirrors in vacuum, viz., "sputtering" and evaporation.[1] The older method of cathode disintegration or "sputtering" requires only a moderate vacuum of the order of .01 mm. A cathode of the same size as the mirror is placed opposite the mirror at a potential of about 10,000 volts. After about 50 minutes, metal from the cathode is deposited on the mirror in a polished film of sufficient thickness to be opaque. Such metals as gold, silver, platinum, copper, etc., may be so

[1] C. Hawley Cartwright and John Strong, "An Apparatus for the Evaporation of Various Materials in High Vacua," *Rev. Sci. Inst.*, **2**, 189, 1931.

© Astronomical Society of the Pacific • Provided by the NASA Astrophysics Data System

IPR2025-00336
Samsung Electronics Co., Ltd. v. Sinotechnix, LLC.
Samsung's Exhibit 1009
EX1009, Page 1

1934PASP...46...18S



deposited. Aluminum, magnesium, and some other metals are difficult to sputter and are best deposited by the evaporation method.

A vacuum of $10^{-4}$ mm of mercury is necessary for the evaporation process. In this vacuum, pure aluminum is heated in small tungsten coils. These coils are arranged opposite the mirror to be coated. The aluminum evaporates from the coil and condenses on the face of the mirror, forming a polished film possessing great brilliance. This process differs from the "sputtering" method in that no potential is required to cause the transfer of metal to the mirror surface. The process is carried out in a vacuum so high that each aluminum atom, after it evaporates and leaves the tungsten coil, travels in a straight path, uninterrupted by collision with other atoms, until it strikes either the mirror or the vacuum jar, where it condenses to form the film. There is practically no reflection of aluminum atoms from these surfaces, so that with a point source of evaporation such as a single small coil it is possible to get sharp shadows of obstructions in the vapor bath. As the film is only $\frac{1}{10}$ $\mu$ thick, very little heat is evolved on the mirror as a result of the condensation.

Aluminum unprotected by an oxide film is a very active metal chemically. This is illustrated by an amalgamated aluminum wire, to which an oxide film does not adhere firmly. The wire oxidizes so rapidly in air that it appears to grow "whiskers" within a few minutes. An evaporated aluminum film covers itself with an oxide coating when it is exposed to air. This coating protects the metal from tarnishing so effectively that concentrated nitric acid may be poured on the mirror with immunity. However, aluminum films may be readily dissolved in dilute hydrochloric acid to which a trace of some copper salt is added. Pure acid attacks the aluminum very slowly. Caustics such as KOH and NaOH dissolve the aluminum rapidly. Canada balsam dissolves the aluminum slowly, so that half-reflecting films should not be cemented with this material.

Aluminum films adhere to glass so firmly that a piece either of Scotch tape or adhesive tape may be pressed on to the film and then stripped off without loosening the metal from the

© Astronomical Society of the Pacific • Provided by the NASA Astrophysics Data System

EX1009, Page 2

1934PASP...46...18S



glass. Because of this property, the most efficient way to clean the surface of an aluminized mirror from adherent dust and other contamination is by washing with soap and water.

Aluminum films do not require frequent burnishing, although they may be burnished after a year's use, if necessary. The films have exactly the same degree of polish as the underlying glass surface. Aluminized mirrors, especially when new, do not scatter light, so that a coelostat and mirror telescope will give an image as pure from scattered light as that formed by a refractor with equally polished faces.

Aluminum is a particularly good reflector in the visible and ultra-violet spectrum. Preliminary determinations of the reflectivity show the reflectivity in the green and yellow to be 89 per cent, the blue 87 per cent, and the violet 86 per cent. At 2536 A the reflectivity has fallen to 80 per cent. Aluminum and new silver are not materially different in the visible spectrum. However, in actual practice, aluminum is found to be superior to silver, particularly for the H and K lines.

Calculations were made to determine the uniformity of the thicknesses of aluminum deposited on a mirror. The results of this calculation are given in Table I.

TABLE I

| Distance from Center of Mirror | Relative Thickness of Aluminum |
|---|---|
| 0.0 inches | 1.000 |
| 4.5 inches | 1.011 |
| 9.0 inches | 1.030 |
| 13.5 inches | 1.024 |
| 16.2 inches | 0.999 |

To confirm this calculation a large plate partially coated showed no perceptible lack of uniformity by the transmitted light, whereas a departure of 5 per cent from uniformity of thickness would have caused a variation of 15 per cent transparency.

The apparatus developed for aluminizing mirrors up to 38 inches in diameter is shown by the diagram. The essential parts of this apparatus consist of several helical tungsten coils

© Astronomical Society of the Pacific • Provided by the NASA Astrophysics Data System

EX1009, Page 3

1934PASP...46...18S



charged with aluminum; electrical current to heat and evaporate the aluminum; a vacuum chamber (a large bell jar and base) to contain the coils and the mirror to be aluminized, and a pumping system capable of evacuating to a pressure of at least $10^{-4}$ mm of mercury.

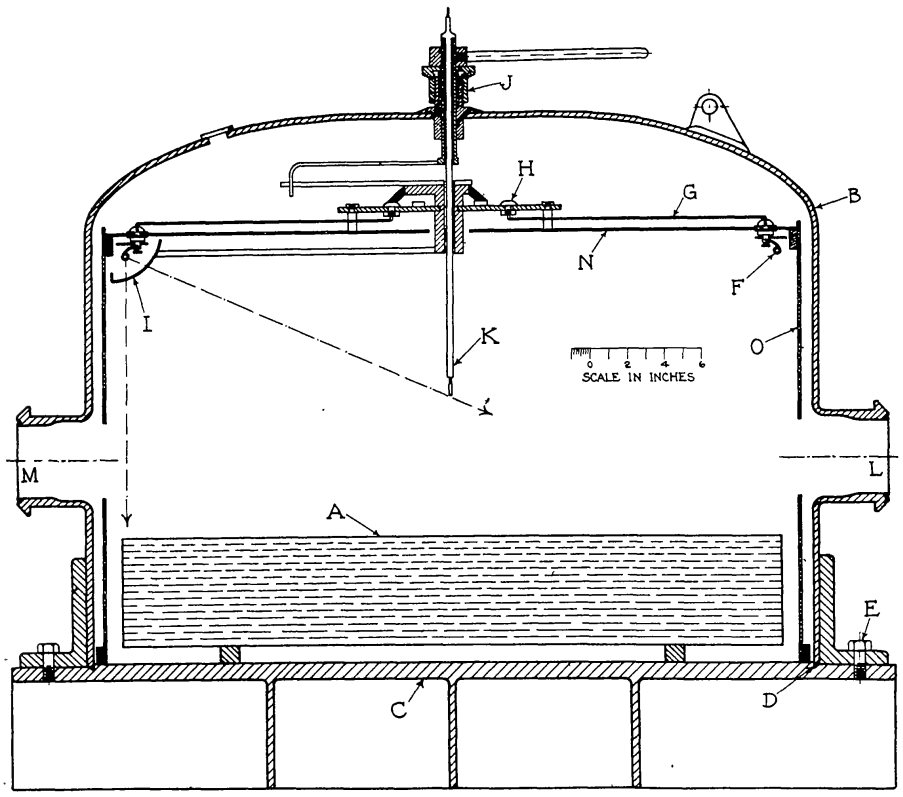


FIG. 1.—Diagram of apparatus for aluminizing mirror. *A,* Mirror to be aluminized (36 inches diameter); *B,* Bell-jar (39½ inches inside diameter); *C,* Base plate; *D,* Groove for lead fuse wire gasket; *E,* Bolts to fasten bell-jar to base plate; *F,* Filaments of tungsten wire from which aluminum is evaporated; *G,* Conductors to supply current to filaments; *H,* Switch; *I,* Baffle; *J,* Packing gland for switch control; *K,* Electrode for cleaning the mirror face; *L,* Observation window; *M,* Pump connection; *N,* Plate to carry filaments and switch; *O,* Removable brass cylinder to carry *N*.

The evaporation method of coating mirrors with a metallic film was at first unsuccessful for aluminum, as the tungsten heating coils were dissolved by the aluminum. Attempts to use crucibles proved clumsy and inefficient, as the crucible material itself evaporated. The final success of the application of the

© Astronomical Society of the Pacific • Provided by the NASA Astrophysics Data System

1934PASP...46...18S



evaporation technique to aluminum followed the discovery that tungsten has a rather low solubility in aluminum.[2] By increasing the size of tungsten wire used for the heating coils it was possible to have a single coil last for several evaporations instead of constantly burning out.

The helical tungsten coils, 2½ inches in length and 5/16 inch in diameter, with four turns per inch, are made from 0.030-inch tungsten wire wound on a mandril in a Bunsen flame. The aluminum charge consists of **U**-shaped wires clamped to each turn of the helix. Each aluminum wire has a diameter of 1/32 of an inch, and is 3/8 of an inch long before being bent.

Twelve coils are arranged around a 36-inch circle and are mounted on a large disk together with a switch to supply power to the coils. This disk is supported on a removable brass cylinder 38 inches in diameter and 24 inches high. The coils are 18 inches above the edge of the mirror face. The uniformity which is attainable by this arrangement has already been mentioned.

The switch is operated from outside the vacuum jar through a packing gland. It connects the tungsten coils separately to the electrical supply. A movable baffle, actuated by the switch, shields each coil while the aluminum is melted and freed from the first fraction of distillate. This, of course, is done in vacuum, the correct amount of heating being attained by a potential of 20 volts across the coils for a period of 4 seconds. By turning the switch backwards the baffle travels 90° out of phase with the switch, and therefore does not interfere with the actual coating process. The correct heat for the evaporation of the aluminum from the coil to the mirror is attained by the application of 20 volts for 15 seconds. The entire process of distilling from the twelve coils may be completed in slightly more than 3 minutes. Because of the "getter" action of the aluminum vapor, the vacuum improves during the actual distillation process. About 200 watts are consumed by the coils, and this amount of heat does not perceptibly change the temperature of the mirror.

[2] John Strong, *Phys. Rev.*, **43**, 498, 1933.

© Astronomical Society of the Pacific • Provided by the NASA Astrophysics Data System

1934PASP...46...18S



The mirror to be coated rests on a bedplate made from a steel plate having a thickness of one inch and a diameter of 48 inches. This is reinforced by steel ribs $\frac{3}{8} \times 6$ inches. The mirror actuately rests on brass bars fastened to the bedplate in order to allow gases underneath to be more freely pumped.

The bell jar is made of $\frac{1}{4}$-inch sheet steel. The top of the jar is a tankhead 40 inches outside diameter, which is welded to a rolled cylinder of equal diameter. A rolled angle iron stiffens the bottom of this cylinder to allow for machining. A soft wire (actually a lead fuse wire) is pressed into a groove in the bedplate by this machined surface at the bottom of the bell jar, thereby effecting a vacuum-tight seal between the cylinder wall and the bedplate. Twenty-four screws squeeze this gasket with a force of 50 tons, to which is added 10 tons by atmospheric pressure when the jar is evacuated. The inside of the jar and the face of the bedplate are coated with Apiezon wax W. This material has a vapor pressure of only $10^{-3}$ mm of mercury at 180° C. At room temperature its vapor pressure is negligible, so that it gives a surface which does not outgas into the vacuum chamber. The wax surface is coated by evaporation with several layers of aluminum.

The pumping system consists of a 4-inch valve and trap, a 6-inch diameter Apiezon oil B diffusion pump, and a $2\frac{1}{2}$-inch Apiezon oil A diffusion pump. These two pumps are permanently connected to the side of the bell jar. An observation porthole, four inches in diameter, is located opposite the pump connection. A spark-discharge tube shows black for a 3-inch spark at $10^{-3}$ mm mercury pressure. The hypervac mechanical pump, with liquid air in the trap, should attain this vacuum within one hour after pumping is started. If this vacuum is obtained within the one-hour period it indicates that there are no leaks in the system, and the diffusion pumps may be turned on. It may be expected that the diffusion pumps will reduce the pressure to approximately $10^{-5}$ mm mercury in two or three hours.

In order to be successfully aluminized, it is essential that the mirror surface be absolutely clean. When a mirror is sufficiently clear the breath should condense to form a structureless

© Astronomical Society of the Pacific • Provided by the NASA Astrophysics Data System

EX1009, Page 6

1934PASP...46...18S



gray film on the surface. It is not especially difficult to clean a small mirror so that it will pass this "breath test." Large mirrors, however, because of the fact that they frequently have small faults which retain wax and dirt, were at first very difficult to clean, as the foreign material from these faults worked out to the surface. If a rouge pad is used to remove this contamination, the mirrors will pass the "breath test." But this is open to objection on the ground that it may alter the figure of the mirror. The best method for removing this foreign material is with an electrical discharge.

An electrode insulated in a capillary tube passes into the bell jar through the axis of the switch mechanism, and while the jar is being evacuated a discharge from the electrode causes the jar to be completely filled with ions which clean the disk much more efficiently than any other process. After this the aluminum may be evaporated. A mirror cleaned by means of a vacuum discharge (or simply in an open spark gap, or even by passing a blue flame over it) will not show any breath figure as the moisture condenses on the face in a continuous film.[3]

As mentioned above, aluminum mirrors may be freed from adherent dust, finger marks, oil, and other contamination by washing with soap and water. After rinsing, the water should be removed with an alcohol wash, and the alcohol in turn removed by blotting (not rubbing). Loose dust may be removed with a brush made by dividing a large handful of absorbent cotton. Loose cotton will not scratch aluminum, but it is possible to scratch it by strong pressure with a coherent cotton pad. Water stains caused by condensed moisture may be removed with a dry rouge pad. One must be careful to use a light pressure, since heavy pressure deforms and "whitens" the coat.

The useful life of an aluminum film is not yet known. It may last several years if the best technique is used for taking care of the films. Whether some other element or alloy will prove better than aluminum is a matter not yet settled. It could

[3] J. T. Baker, "Breath Figures," *Phil. Mag.*, **44**, 752, 1922. I am indebted to J. T. Baker, whose article suggested the experiments leading to this method of cleaning; and further to J. A. Anderson, who called my attention to Mr. Baker's article.

© Astronomical Society of the Pacific • Provided by the NASA Astrophysics Data System

EX1009, Page 7

1934PASP...46...18S



hardly be expected to adhere more tenaciously, or to be much more resistant to tarnish than aluminum.

In practice, aluminum films show promise in their application to telescope mirrors. The mirrors of a Cassegrain telescope aluminized in October, 1932, show no tarnish as yet, though they have been in constant use since they were coated. A first coelostat mirror of the Brackett Observatory, Claremont, California, in use for ten months, showed a loss of reflectivity of 2 per cent or less.

The auxiliary mirrors of the 100-inch and 60-inch telescopes of the Mount Wilson Observatory have been aluminized. Although there is still one reflection from silver in each telescope, it has resulted in substantially reduced exposure time for the photography of stellar spectra. Also, the diminution of scattered light allows the photography of fainter objects.

The Crossley reflector (Lick Observatory, Mount Hamilton) is the largest mirror thus far coated with aluminum. A quartz spectrograph is used with this mirror at its principal focus, so that it should be possible, due to the high reflectivity of aluminum, to get spectra in the ultra-violet to the limit of the transmission of the atmosphere.

The coating of speculum metal gratings with aluminum appears to be of potential value for both astronomical and laboratory spectroscopy. The thing which makes aluminum a suitable metal for experiments with gratings is that it is possible to remove it. We have a differential solvent (KOH) which dissolves aluminum but does not attack the speculum and consequently does not alter the usefulness of the bare speculum grating. It has been found that aluminization improves the reflectivity about 50 per cent for visible light, and it also causes higher orders of the spectrum to become relatively brighter. A speculum grating becomes particularly bright in the ultra-violet when aluminized. One particular grating was brightened around 2300 A by a factor of 5 or 10. No definition is lost in the finer details of the spectrum. When the films are thin and if the grooves are shallow, the spectrum formed by an aluminized grating, when viewed without a lens, appears to be crossed by light and dark bands. These bands do not occur in ordinary

© Astronomical Society of the Pacific • Provided by the NASA Astrophysics Data System

EX1009, Page 8

1934PASP...46...18S



gratings, and, although they may be strong in gratings with shallow rulings (ruled for ultra-violet) and for a thin aluminum coat, they appear only in high orders when coats of .4μ thickness, or greater, are deposited.

The various problems associated with the improvement of gratings by aluminization are now being studied, and it is expected that a paper on this subject will be published in the near future.

California Institute of Technology
Pasadena, California
January, 1934

© Astronomical Society of the Pacific • Provided by the NASA Astrophysics Data System