US006679621B2

(12) **United States Patent**
West et al.

(10) **Patent No.: US 6,679,621 B2**
(45) **Date of Patent: Jan. 20, 2004**

(54) **SIDE EMITTING LED AND LENS**

(75) Inventors: **Robert S. West**, Wixom, MI (US); **Gary D. Sasser**, San Jose, CA (US); **James W. Stewart**, San Jose, CA (US)

(73) Assignee: **Lumileds Lighting U.S., LLC**, San Jose, CA (US)

(*) Notice: Subject to any disclaimer, the term of this patent is extended or adjusted under 35 U.S.C. 154(b) by 0 days.

(21) Appl. No.: **10/179,600**

(22) Filed: **Jun. 24, 2002**

(65) **Prior Publication Data**

US 2003/0235050 A1 Dec. 25, 2003

(51) **Int. Cl.**[7] **F21V 5/00**
(52) **U.S. Cl.** **362/327**; 362/308; 362/337
(58) **Field of Search** 362/308, 309, 362/327, 332, 336, 337, 338, 340; 313/512

(56) **References Cited**

U.S. PATENT DOCUMENTS

1,384,659 A	*	7/1921	Benard	362/309
1,990,390 A	*	2/1935	Rudy, Jr.	362/337
2,344,221 A	*	3/1944	Trautner	362/309
3,646,338 A	*	2/1972	Goytisolo	362/309
3,739,169 A	*	6/1973	Weinreich	362/542
4,192,994 A		3/1980	Kastner	250/280
4,371,916 A	*	2/1983	De Martino	362/332
4,698,730 A		10/1987	Sakai et al.	362/311
5,140,220 A		8/1992	Hasegawa	313/512
5,335,157 A	*	8/1994	Lyons	362/337
5,404,282 A		4/1995	Klinke et al.	362/249
5,452,190 A		9/1995	Priesemuth	362/255
5,608,290 A		3/1997	Hutchisson et al.	315/200
5,777,433 A		7/1998	Lester et al.	313/512
5,806,955 A		9/1998	Parkyn, Jr. et al.	362/31
5,894,195 A		4/1999	McDermott	313/512
5,894,196 A		4/1999	McDermott	313/512
5,897,201 A	*	4/1999	Simon	362/327
5,898,267 A		4/1999	McDermott	313/512
6,030,099 A		2/2000	McDermott	362/800
6,048,083 A		4/2000	McDermott	362/337
6,177,761 B1		1/2001	Pelka et al.	313/512

FOREIGN PATENT DOCUMENTS

WO	WO 98/26212	6/1998
WO	WO 99/09349	2/1999
WO	WO 01/07828 A1	2/2001

OTHER PUBLICATIONS

Patent Application, 09/849,042, Side Emitting LED, West, et al., filed May 4, 2001, US Publication 20020163810.
Patent Application, 09/849,084, LED Lens, West, et al., filed May 4, 2001, US Publication 20020163808.
Parkyn et al., The Black Hole™: Cuspated waveguide–injectors and illuminators for LEDs; Part of the SPIE Conference on Nonimaging Optics: Maximum Efficiency Light Transfer V, Denver, CO, Jul. 1999.

* cited by examiner

Primary Examiner—Alan Cariaso
(74) *Attorney, Agent, or Firm*—Patent Law Group LLP

(57) **ABSTRACT**

A lens comprises a bottom surface, a reflecting surface, a first refracting surface obliquely angled with respect to a central axis of the lens, and a second refracting surface extending as a smooth curve from the bottom surface to the first refracting surface. Light entering the lens through the bottom surface and directly incident on the reflecting surface is reflected from the reflecting surface to the first refracting surface and refracted by the first refracting surface to exit the lens in a direction substantially perpendicular to the central axis of the lens. Light entering the lens through the bottom surface and directly incident on the second refracting surface is refracted by the second refracting surface to exit the lens in a direction substantially perpendicular to the central axis of the lens. The lens may be advantageously employed with LEDs, for example, to provide side-emitting light-emitting devices. A lens cap attachable to a lens is also provided.

15 Claims, 16 Drawing Sheets

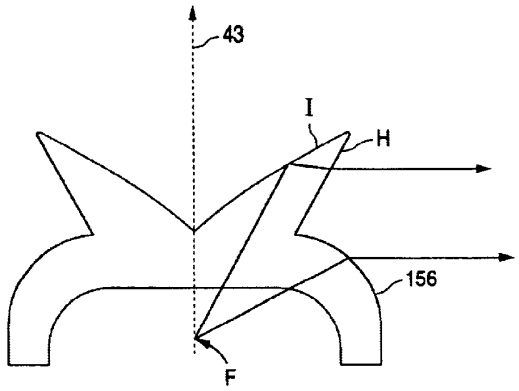

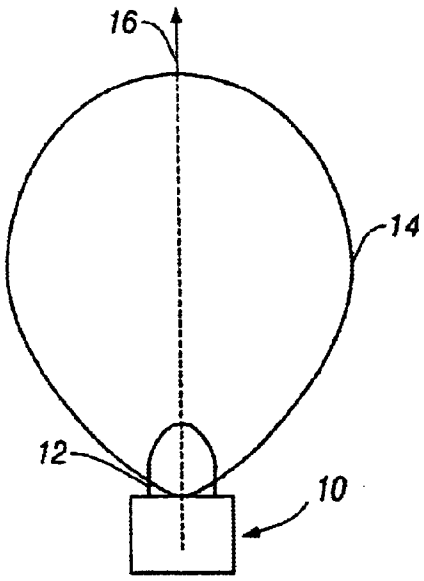

FIG. 1A
(Prior Art)

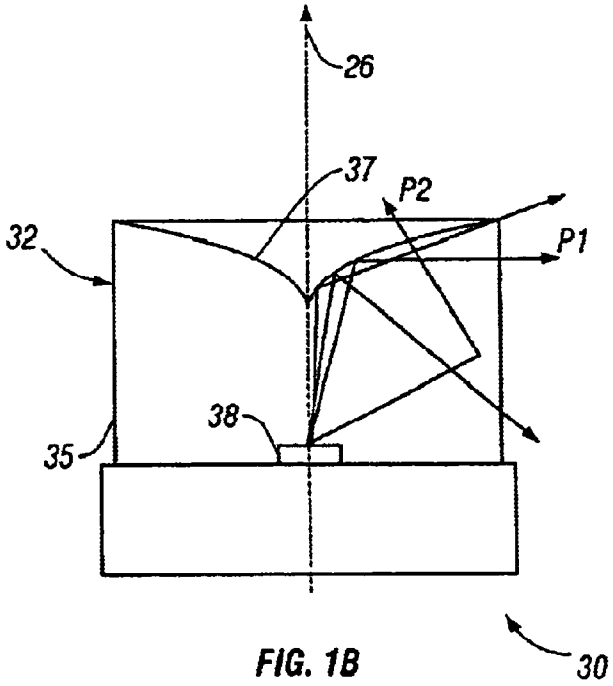

FIG. 1B
(Prior Art)

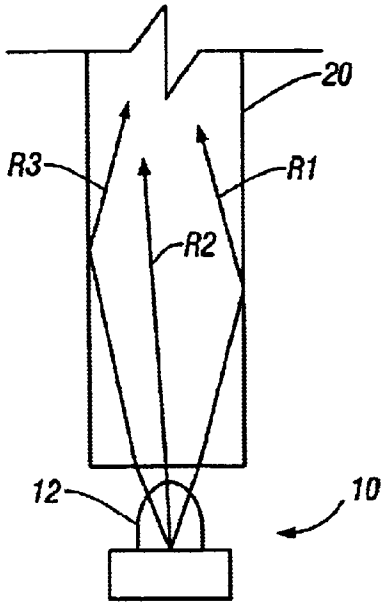

FIG. 2
(Prior Art)

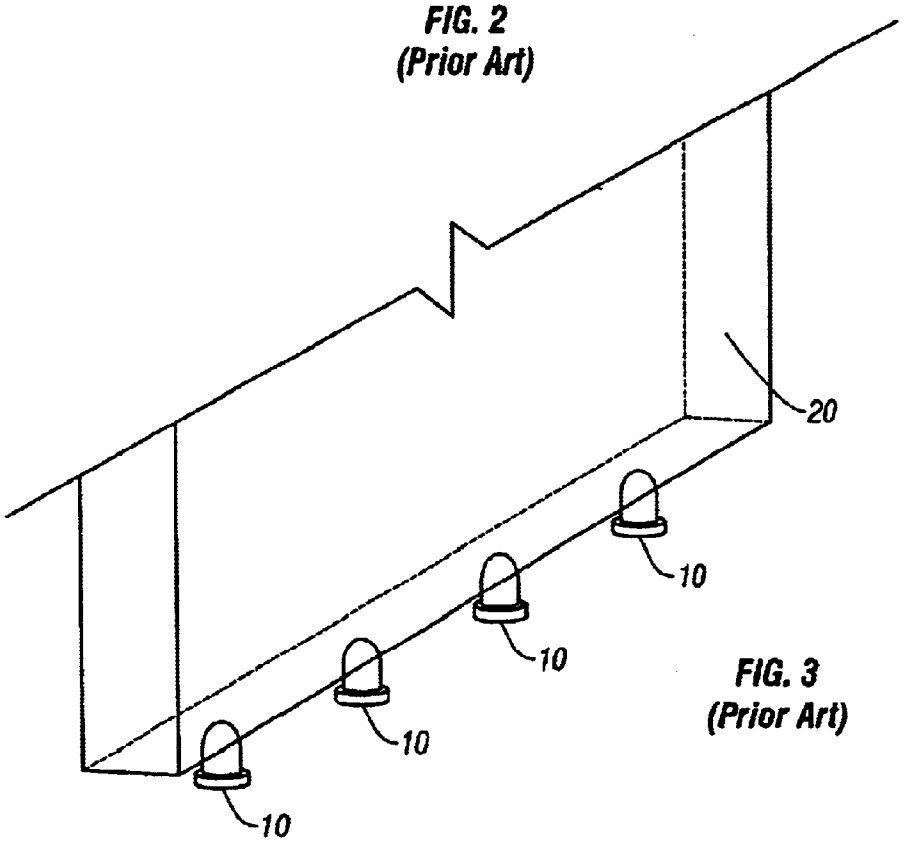

FIG. 3
(Prior Art)

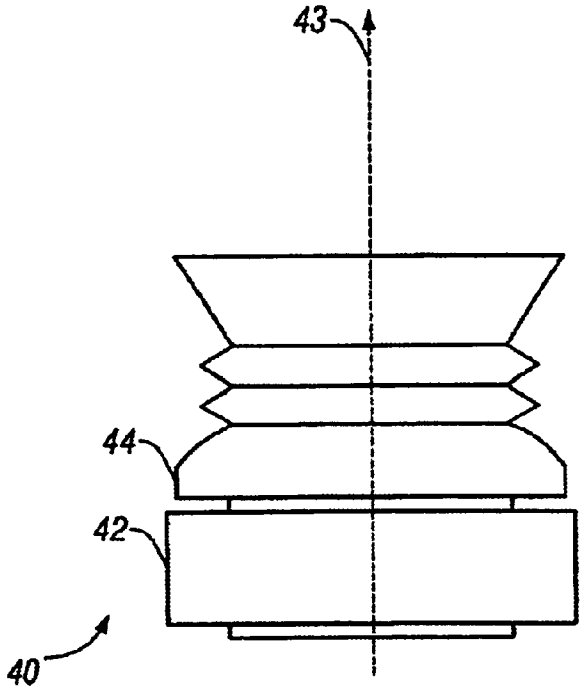

FIG. 4

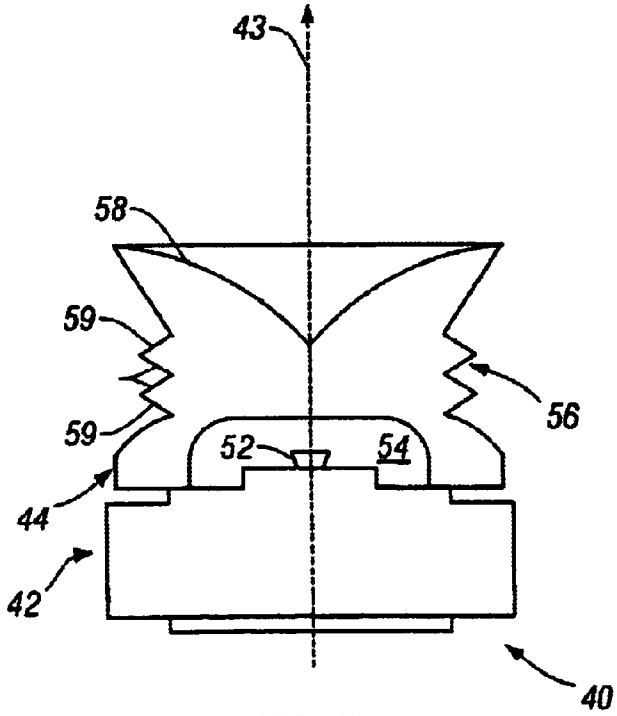

FIG. 5A

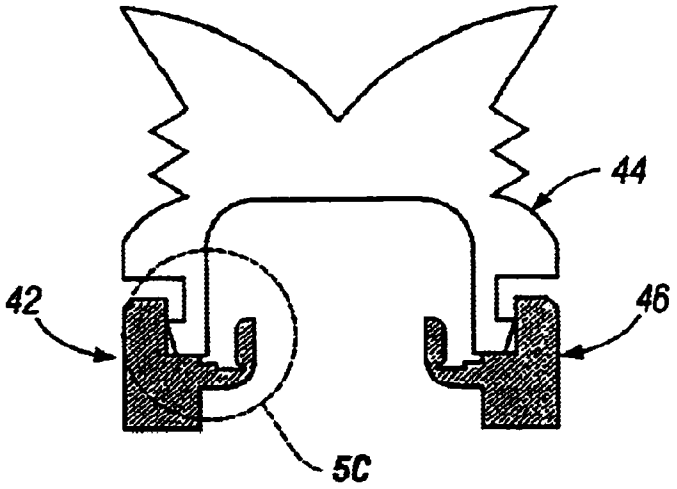

FIG. 5B

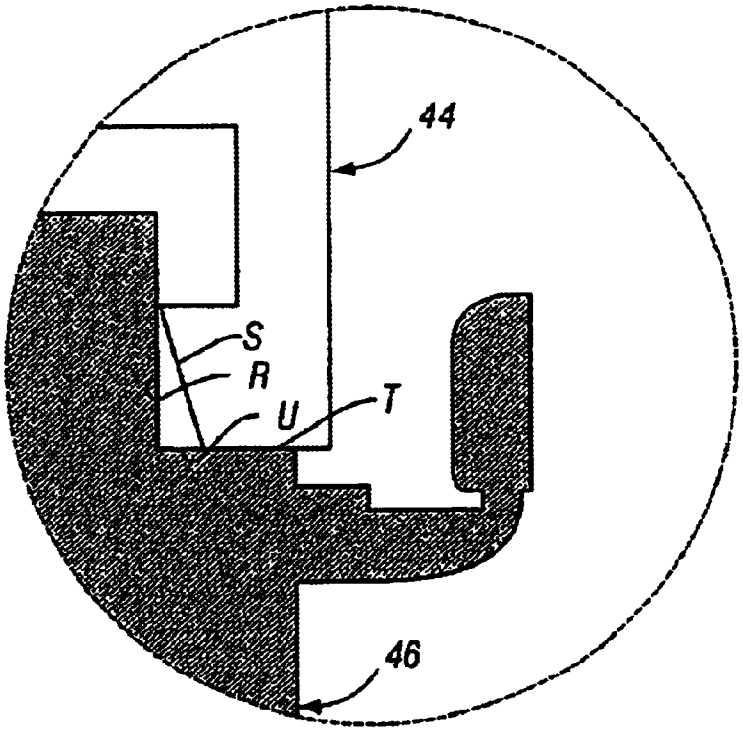

FIG. 5C

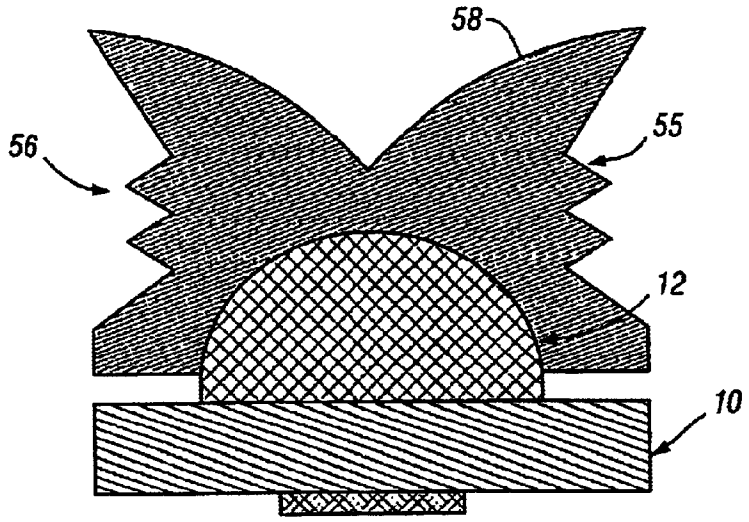
58
56
55
12
10

FIG. 5D

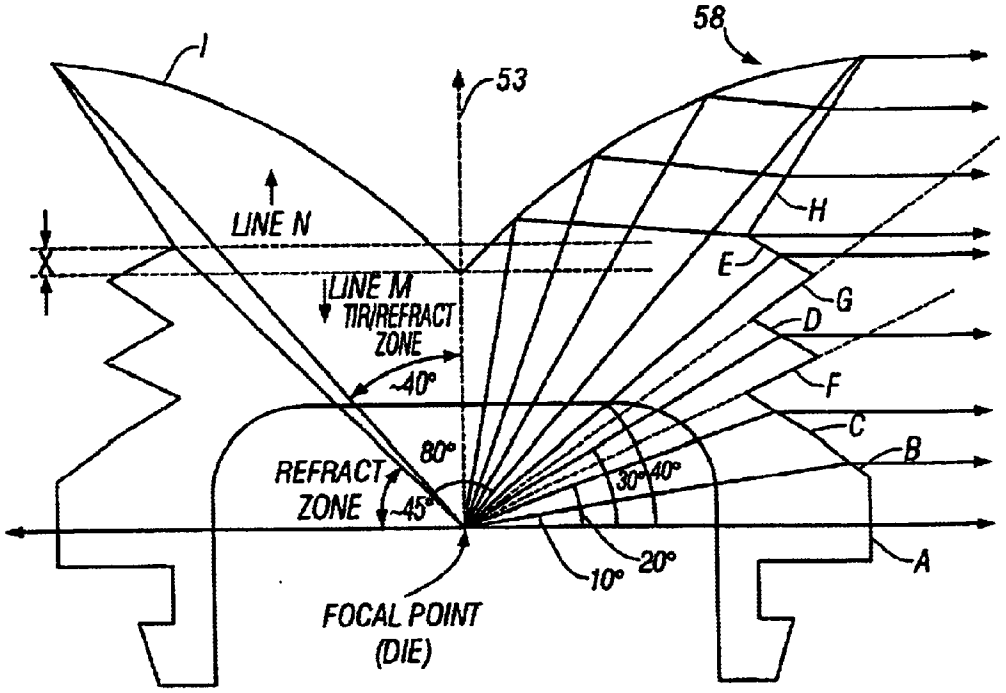
58
I
53
LINE N
LINE M
TIR/REFRACT
ZONE
~40°
80°
REFRACT
ZONE
~45°
H
E
G
D
F
C
B
A
30°
40°
20°
10°
FOCAL POINT
(DIE)

FIG. 5E

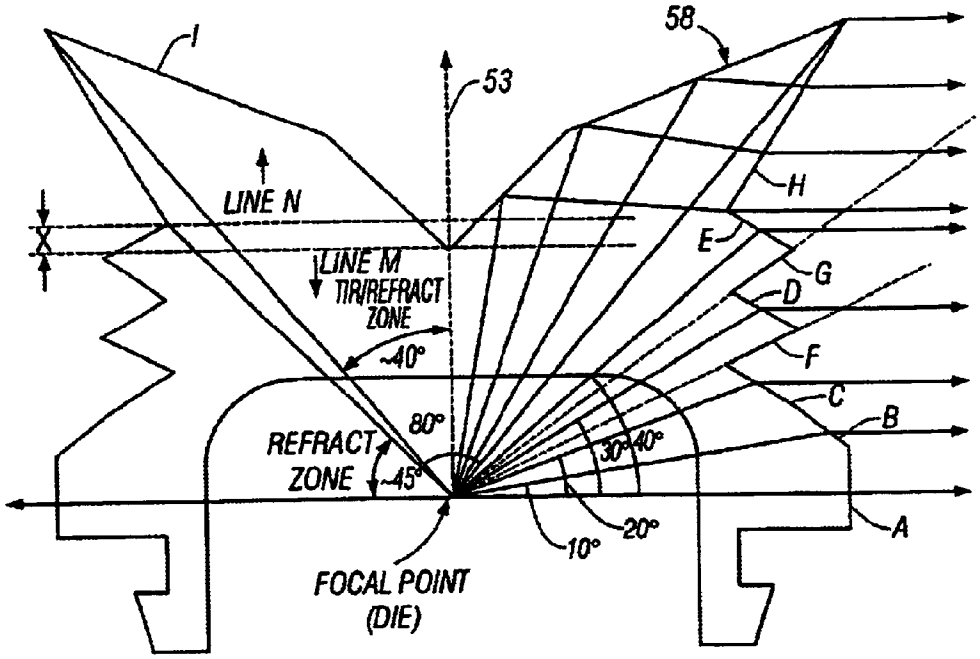
1
58
53
LINE N
H
E
LINE M
TIR/REFRACT
ZONE
G
D
~40°
F
C
80°
B
REFRACT
ZONE
~45°
30°
40°
20°
10°
A
FOCAL POINT
(DIE)

FIG. 5F

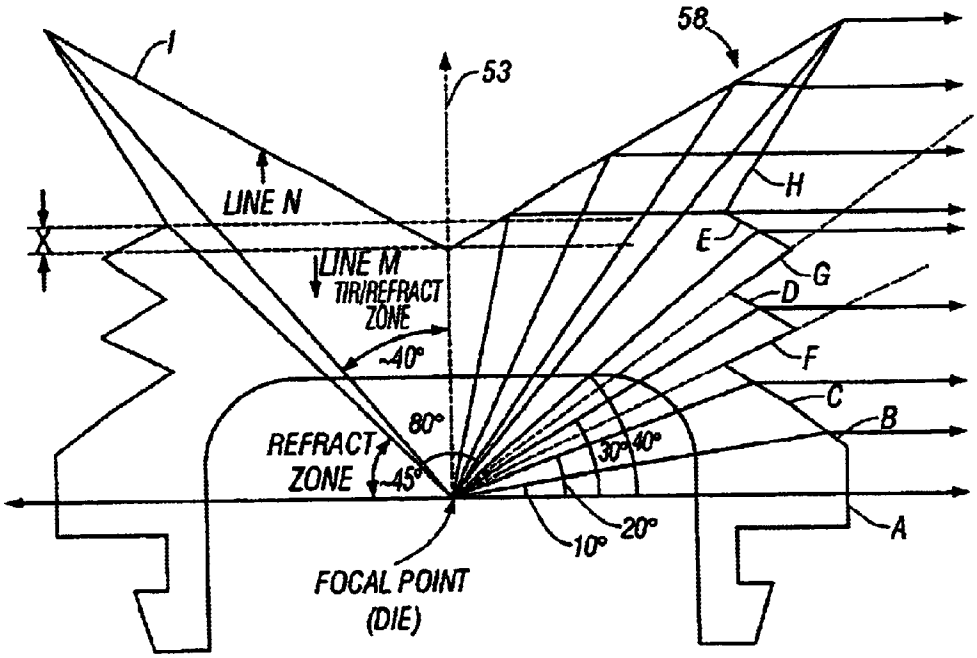
1
58
53
LINE N
H
E
LINE M
TIR/REFRACT
ZONE
G
D
~40°
F
C
80°
B
REFRACT
ZONE
~45°
30°
40°
20°
10°
A
FOCAL POINT
(DIE)

FIG. 5G

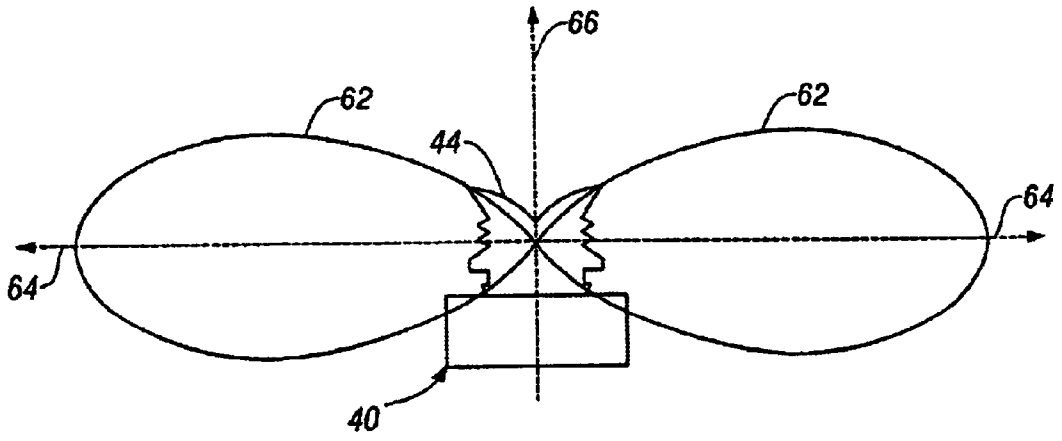

FIG. 6

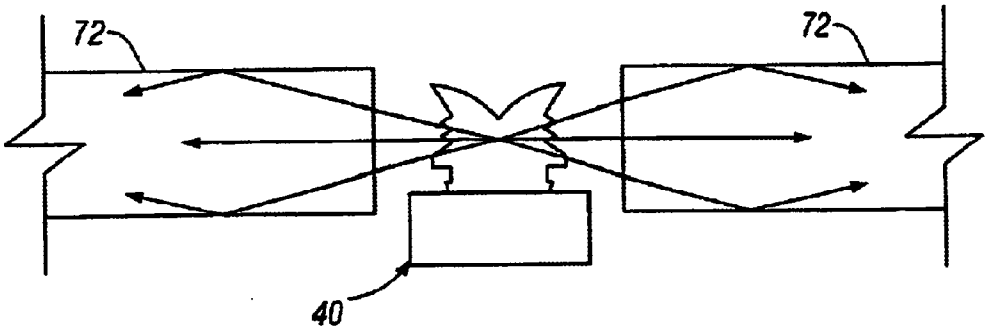

FIG. 7A

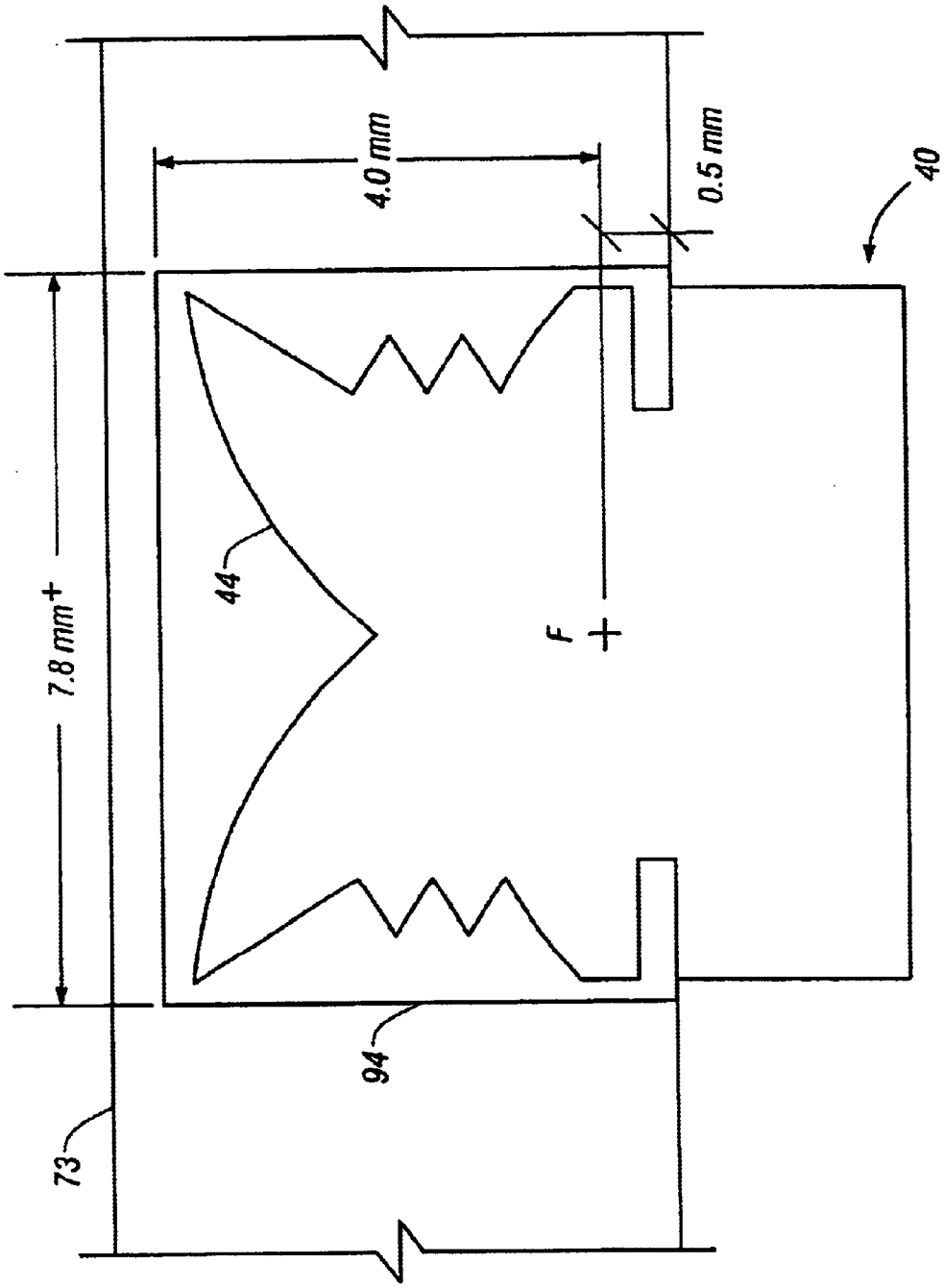

FIG. 7B

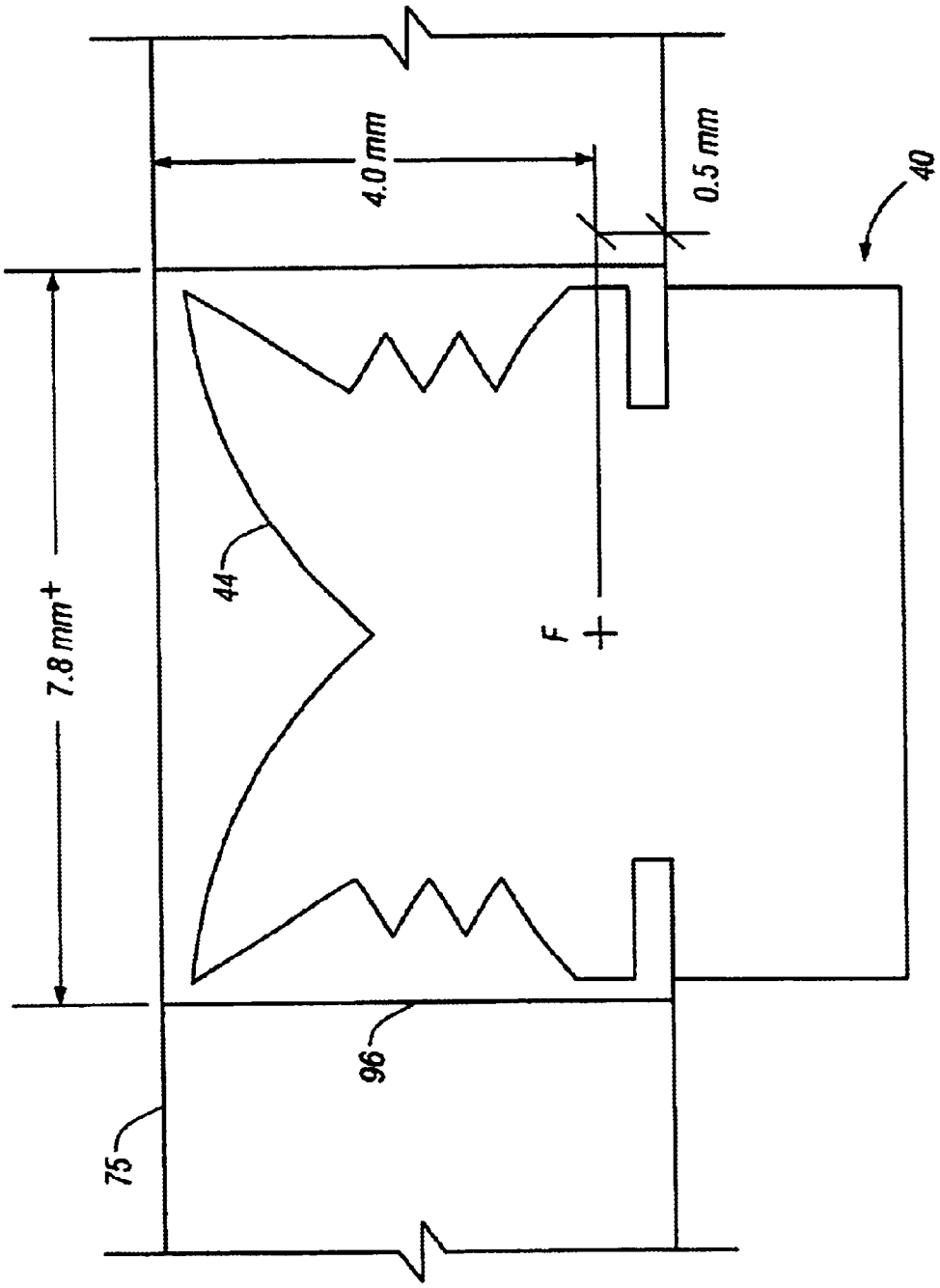

FIG. 7C

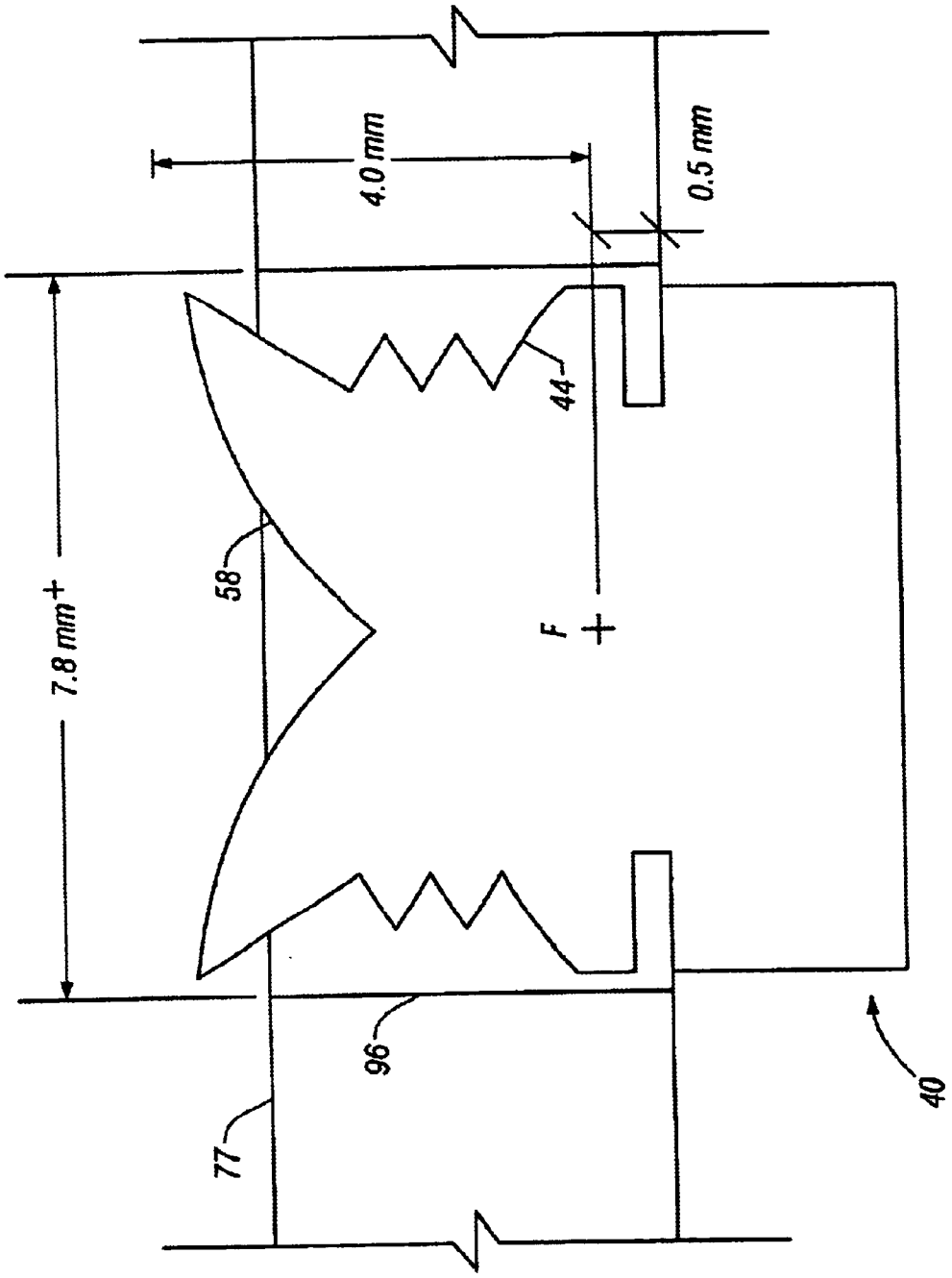

FIG. 7D

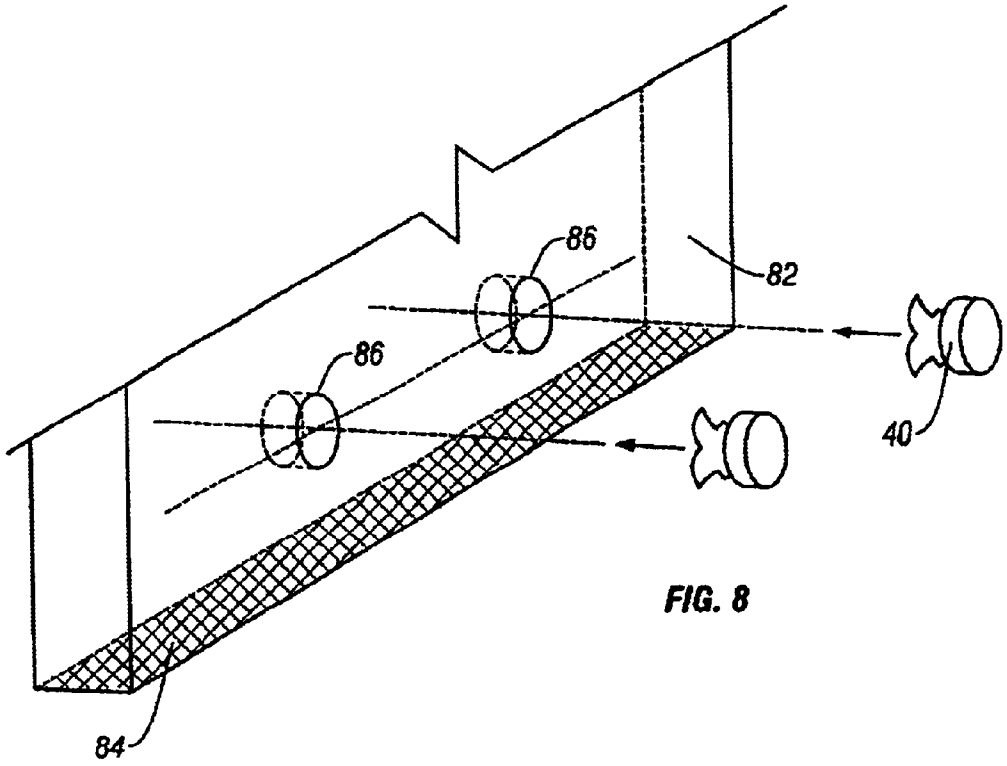

FIG. 8

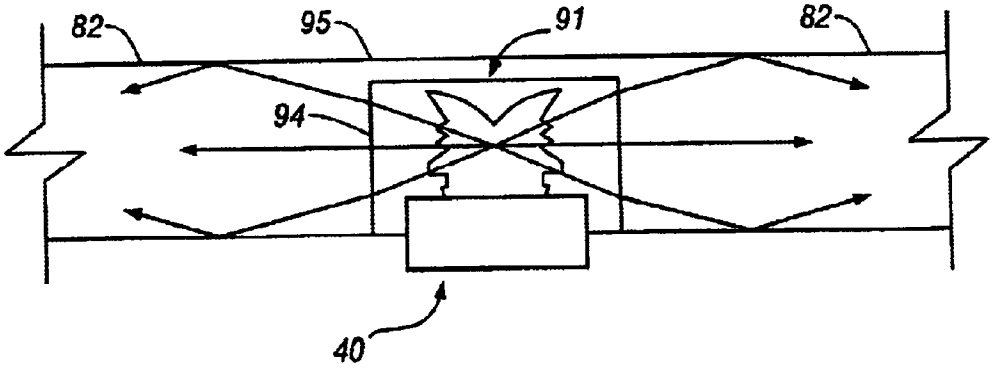

FIG. 9A

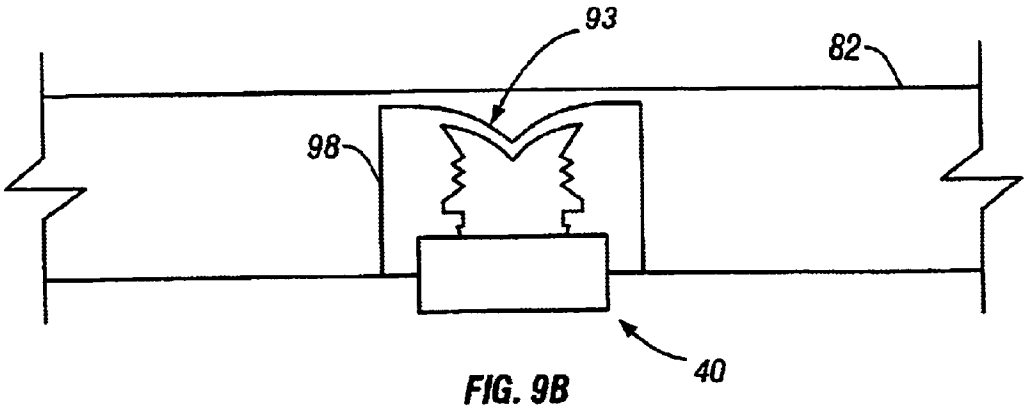

FIG. 9B

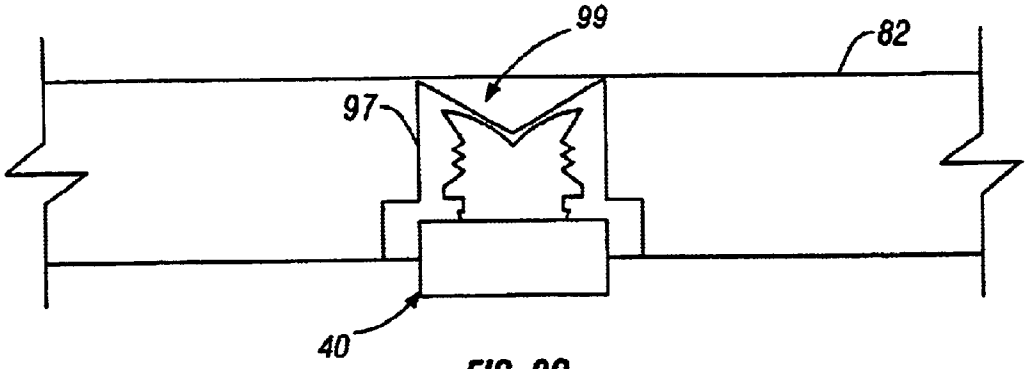

FIG. 9C

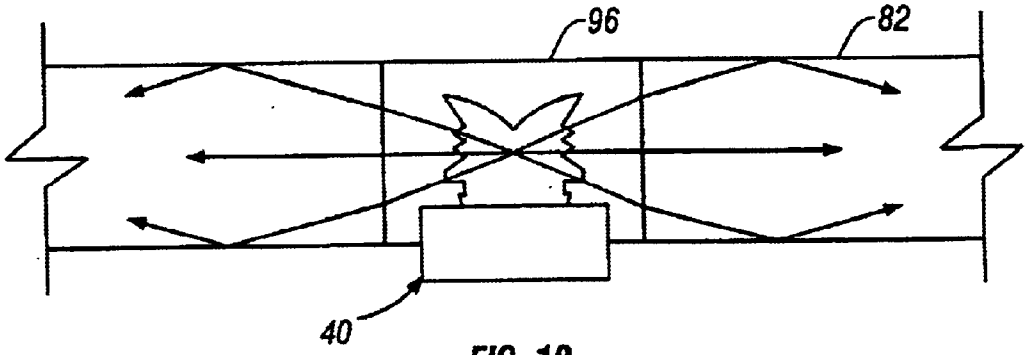

FIG. 10

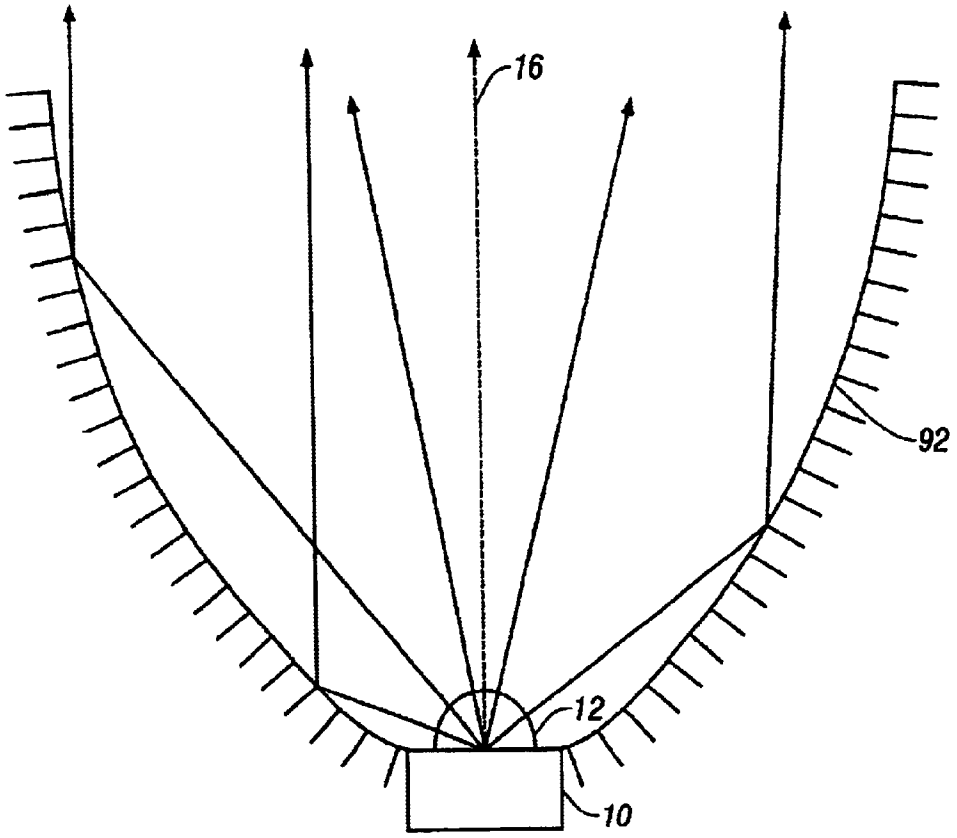

FIG. 11
(Prior Art)

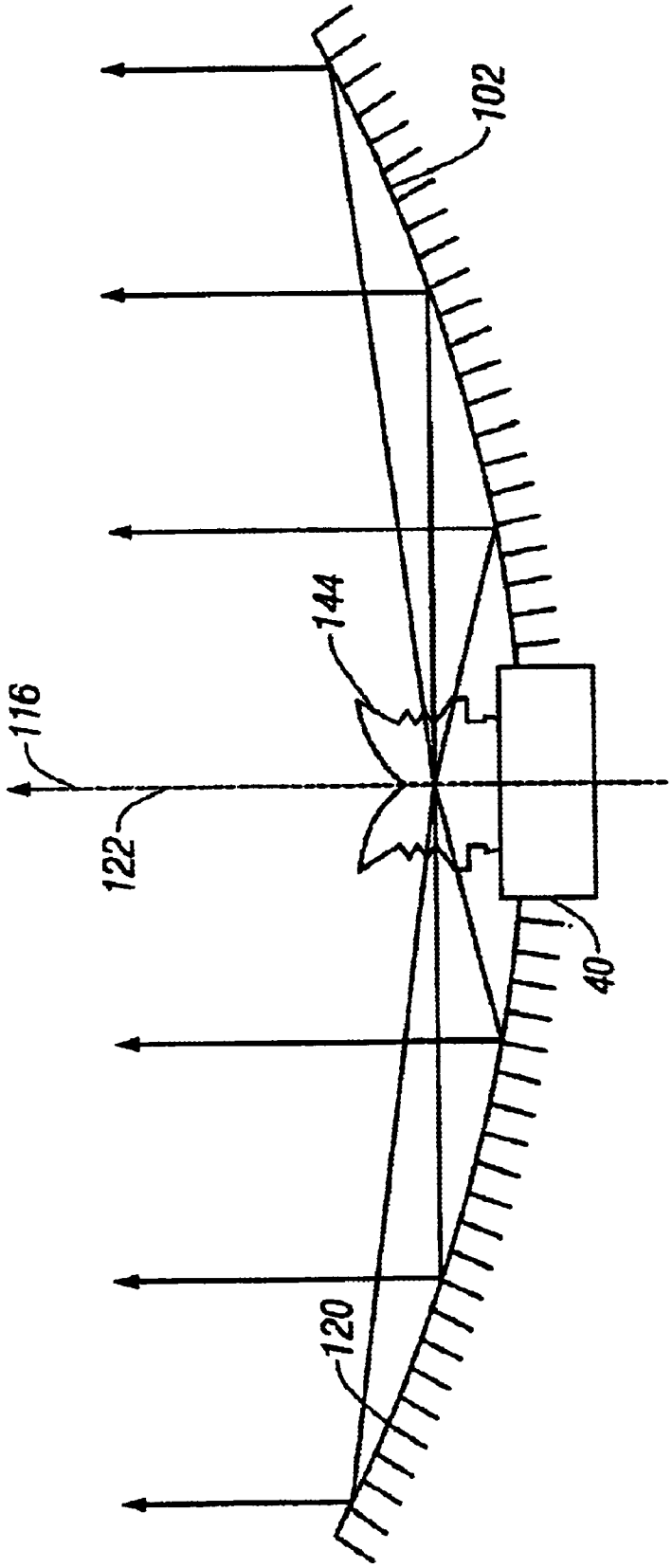

FIG. 12

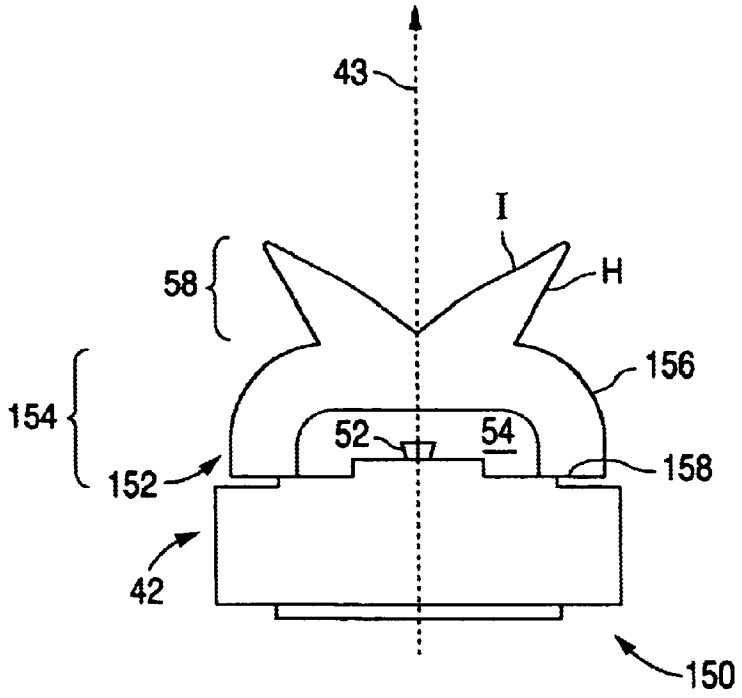

FIG. 13

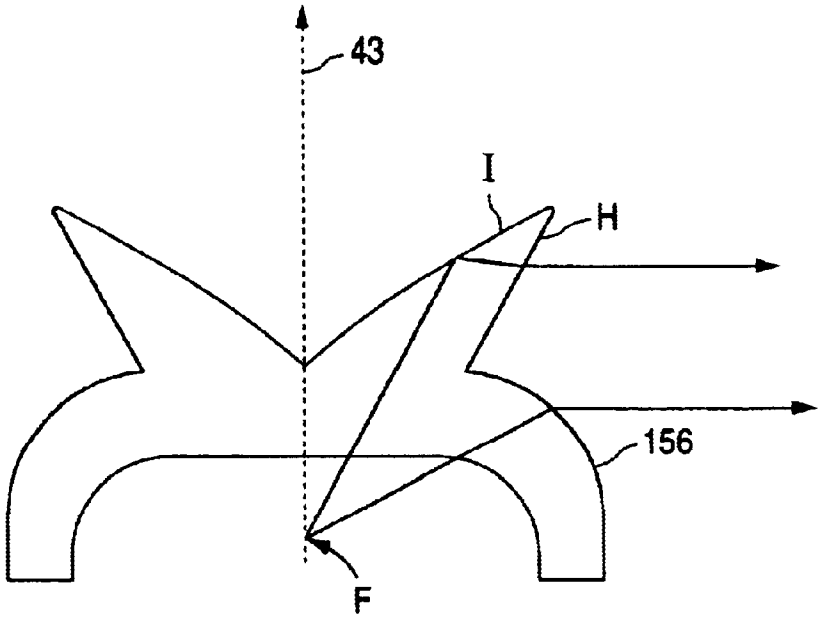

FIG. 14

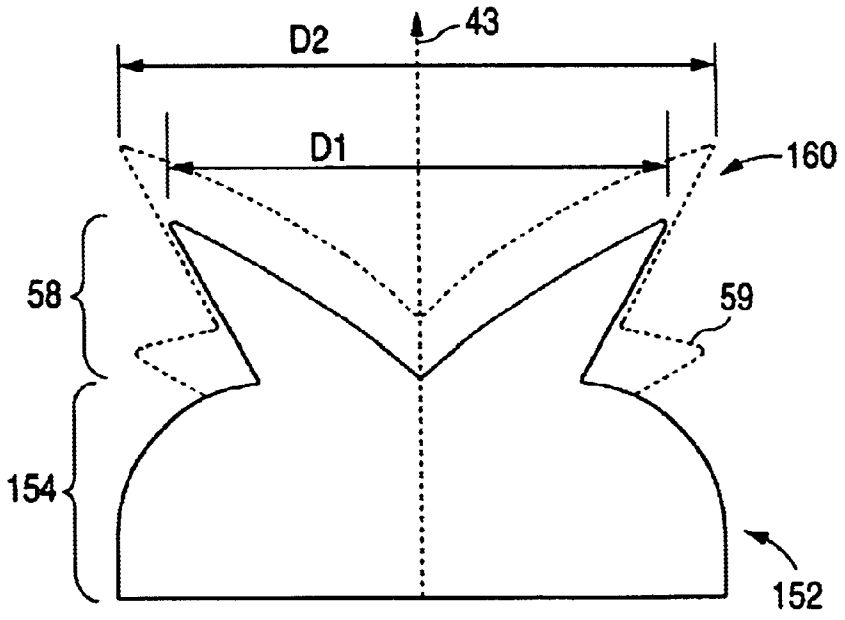

FIG. 15

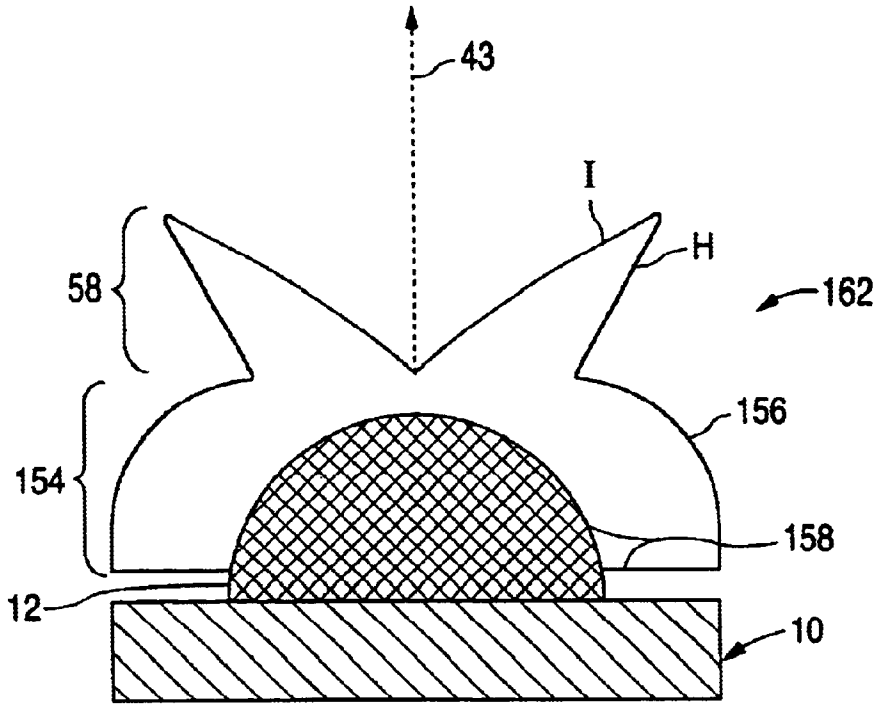

FIG. 16

SIDE EMITTING LED AND LENS

CROSS-REFERENCE TO RELATED APPLICATIONS

This invention is related to U.S. patent application Ser. No. 09/849,042 filed May 4, 2001, entitled "Side Emitting LED," and to U.S. patent application Ser. No. 09/849,084 filed May 4, 2001, entitled "LED Lens". Both of these applications are assigned to the assignee of the present invention and incorporated herein by reference in their entirety.

FIELD OF THE INVENTION

This invention relates generally to light emitting devices and more particularly to side emitting light emitting diodes (LEDs).

BACKGROUND

FIG. **1**A illustrates a conventional LED package **10**. LED package **10** has a hemispherical lens **12** of a type well-known in the art. Package **10** may also have a reflector cup (not shown), in which an LED chip (not shown) resides, that reflects light emitted from the bottom and sides of the LED chip toward the observer. In other packages, other types of reflectors reflect the LED chip's emitted light in a particular direction.

Lens **12** creates a field of illumination **14** roughly along a longitudinal package axis **16** of LED package **10**. The vast majority of light emitted from an LED package **10** with a hemispherical lens **12** is emitted upwards away from LED package **10** with only a small portion emitted out from the sides of LED package **10**.

FIG. **1**B illustrates a known light emitting diode (LED) package **30** with a longitudinal package axis **26**. LED package **30** includes an LED chip **38**, a lens **32** with straight vertical sidewall **35** and a funnel-shaped top surface **37**. There are two main paths in which the light will travel through package **30**. The first light path P**1** is desirable with the light emitted from chip **38** and traveling to surface **37** where total internal reflection (TIR) causes the light to exit through sidewall **35** at approximately 90 degrees to the longitudinal axis. The second light path P**2** is light emitted from chip **38** towards sidewall **35** at an angle causing TIR or a reflection from sidewall **35** causing the light to exit package **30** at an angle not close to perpendicular to the longitudinal axis. This path is not desirable and limits the efficiency of side extracted light.

FIG. **2** illustrates the conventional LED package **10** of FIG. **1** coupled along an edge of a portion of a refractive light guide **20**. LED package **10** is positioned on the edge of light guide **20** along the width of light guide **20**. Light rays R**1**, R**2**, R**3** emitted by LED package **10** are propagated along the length of light guide **20**. FIG. **3** illustrates a plurality of conventional LED packages **10** positioned along the width of light guide **20** of FIG. **2**. These conventional LED/light guide combinations are inefficient as they require a large number of LED packages **10** to illuminate the light guide and result in coupling inefficiencies due to relatively small acceptance angles. These conventional LED packages **10** must be arranged along the entire length of one side of light guide **20** to fully illuminate light guide **20**.

A need exists for an LED package to couple efficiently to shallow reflectors and thin light guides. A need also exists for an LED package to allow these secondary optical elements to have relatively large illuminated areas.

SUMMARY

In accordance with one embodiment, a lens comprises a bottom surface, a reflecting surface, a first refracting surface obliquely angled with respect to a central axis of the lens, and a second refracting surface extending as a smooth curve from the bottom surface to the first refracting surface. Light entering the lens through the bottom surface and directly incident on the reflecting surface is reflected from the reflecting surface to the first refracting surface and refracted by the first refracting surface to exit the lens in a direction substantially perpendicular to the central axis of the lens. Light entering the lens through the bottom surface and directly incident on the second refracting surface is refracted by the second refracting surface to exit the lens in a direction substantially perpendicular to the central axis of the lens.

The inventive lens may be advantageously employed to provide side-emitting light-emitting devices that may be used with light guides and reflectors that have very thin profiles and/or large illuminated areas.

In accordance with another embodiment, a light-emitting device comprises a light-emitting semiconductor device and a lens. The lens comprises a bottom surface, a reflecting surface, a first refracting surface obliquely angled with respect to a central axis of the lens, and a second refracting surface extending as a smooth curve from the bottom surface to the first refracting surface. Light emitted by the semiconductor device, entering the lens through the bottom surface, and directly incident on the reflecting surface is reflected from the reflecting surface to the first refracting surface and refracted by the first refracting surface to exit the lens in a direction substantially perpendicular to the central axis of the lens. Light emitted by the semiconductor device, entering the lens through the bottom surface, and directly incident on the second refracting surface is refracted by the second refracting surface to exit the lens in a direction substantially perpendicular to the central axis of the lens.

The inventive light-emitting device may be efficiently coupled to shallow reflectors and to thin light guides. Secondary optics employed with the inventive light-emitting device may have relatively large illuminated areas.

In accordance with another embodiment, a lens cap comprises a bottom surface attachable to a lens, a reflecting surface, a first refracting surface obliquely angled with respect to a central axis of the lens cap, and a second refracting surface extending as a smooth curve from the bottom surface to the first refracting surface. Light entering the lens cap through the bottom surface and directly incident on the reflecting surface is reflected from the reflecting surface to the first refracting surface and refracted by the first refracting surface to exit the lens cap in a direction substantially perpendicular to the central axis of the lens. Light entering the lens cap through the bottom surface and directly incident on the second refracting surface is refracted by the second refracting surface to exit the lens cap in a direction substantially perpendicular to the central axis of the lens cap. The inventive lens cap may provide advantages similar to or the same as those described above.

BRIEF DESCRIPTION OF THE DRAWINGS

FIG. **1**A illustrates a conventional LED package.

FIG. **1**B illustrates another conventional LED package.

FIG. **2** illustrates a cross-sectional view of a conventional edge-illuminated light guide.

FIG. **3** illustrates a perspective view of the light guide of FIG. **2**.

FIG. **4** illustrates one embodiment of the invention.

FIG. **5**A illustrates a cross-sectional view of the LED package of FIG. **4**.

FIG. **5**B illustrates a cross-sectional view of the lens mating to the housing of the LED package base.

FIG. **5**C illustrates a close-up of the lens/housing mating of FIG. **5**B.

FIG. **5**D illustrates a cross-sectional view of a lens cap mating to an LED package.

FIG. **5**E illustrates ray-traces of one embodiment of a lens.

FIG. **5**F illustrates ray-traces of another embodiment of a lens.

FIG. **5**G illustrates ray-traces of a further embodiment of a lens.

FIG. **6** illustrates side-emission of light from the LED package of FIG. **4**.

FIG. **7**A illustrates a cross-sectional view of the side-emission of light from the LED package of FIG. **4** into two light guides.

FIG. **7**B illustrates a cross-sectional view of the LED package of FIG. **4** inserted into a blind hole in a light guide.

FIG. **7**C illustrates a cross-sectional view of the LED package of FIG. **4** inserted into a through hole in a light guide.

FIG. **7**D illustrates a cross-sectional of the LED package of FIG. **4** inserted into a through hole in a light guide that is thinner than the height of the LED package.

FIG. **8** illustrates a perspective view of a light guide.

FIG. **9**A illustrates a cross-sectional view of the LED package of FIG. **4** mounted in a blind-hole of a light guide.

FIG. **9**B illustrates a cross-sectional view of the LED package of FIG. **4** mounted in a blind-hole of a light guide.

FIG. **9**C illustrates a cross-sectional view of the LED package of FIG. **4** mounted in a blind-hole of a light guide.

FIG. **10** illustrates a cross-sectional view of the LED package of FIG. **4** mounted in a through-hole of a light guide.

FIG. **11** illustrates a conventional LED package coupled to a reflector.

FIG. **12** illustrates the LED package of FIG. **4** in combination with a shallow reflector.

FIG. **13** illustrates a cross-sectional view of a light-emitting device in accordance with another embodiment.

FIG. **14** illustrates ray traces through the lens illustrated in FIG. **13**.

FIG. **15** illustrates a cross-sectional view of the lens illustrated in FIG. **13** superimposed over a cross-sectional view of a lens in accordance with another embodiment.

FIG. **16** illustrates a cross-sectional view of a lens cap mating to an LED package in accordance with another embodiment.

Use of the same reference symbols in different figures indicates similar or identical items. It should be noted that the dimensions in the figures are not necessarily to scale.

DETAILED DESCRIPTION

FIG. **4** illustrates an example of a side emitting LED package **40** in accordance with one embodiment of the invention. LED package **40** includes a longitudinal package axis **43**, an LED package base **42** and a lens **44**. Lens **44** is coupled to LED package base **42**. Longitudinal package axis **43** passes through the center of LED package base **43** and lens **44**. As seen in FIG. **5**A, a surface of LED package base **42** supports an LED chip **52** (a semiconductor chip having a light emitting pn junction) for generating light. LED chip **52** may be one of any number of shapes, including but not limited to a truncated inverted pyramid (TIP) (shown), cube, rectangular solid, or hemisphere. LED chip **52** includes a bottom surface that may be in contact with, or coated with, a reflective material. Although LED chip **52** may emit light from all of its sides, base **42** is generally configured to reflect emitted light upwards towards lens **44** along the longitudinal axis of the package. Such bases are conventional and may include a parabolic reflector in which LED chip **52** resides on a surface of package base **42**. One such package is shown in U.S. Pat. No. 4,920,404, assigned to the present assignee and incorporated herein by reference.

Lens **44** may be manufactured as a separate component using a number of well-known techniques such as diamond turning (i.e., the lens is shaped by a lathe with a diamond-bit), injection molding, and casting. Lens **44** is made of a transparent material, including but not limited to cyclic olefin copolymer (COC), polymethylmethacrolate (PMMA), polycarbonate (PC), PC/PMMA, silicones, fluorocarbon polymers, and polyetherimide (PEI). Lens **44** includes an index of refraction (n) ranging from between about 1.35 to about 1.7, preferably about 1.53, but could have an index of refraction higher or lower based on the material used. In the alternative, lens **44** may be formed onto LED package base **42** and LED chip **52** by various techniques including but not limited to injection molding (e.g., insert molding), and casting.

There is a volume **54** between lens **44** and LED chip **52**. Volume **54** may be filled and sealed to prevent contamination of LED **52** using silicone. Volume **54** may also be in a vacuum state, contain air or some other gas, or be filled with an optically transparent material, including but not limited to resin, silicone, epoxy, water or any material with an index of refraction in the range of, for example, about 1.35 to about 1.7 that may be injected to fill volume **54**. The material inside volume **54** may be colored to act as a filter in order to allow transmission of all or only a portion of the visible light spectrum. If silicone is used, the silicone may be hard or soft. Lens **44** may also be colored to act as a filter.

Lens **44** includes a refractive portion **56** (which may, but does not necessarily, include one or more sawteeth as shown) and a total internal reflection (TIR) funnel portion **58**. The sawtooth portion **56** is designed to refract and bend light so that the light exits from lens **44** as close to 90 degrees to the longitudinal package axis **43** as possible. The sawteeth or refractive surfaces **59** of the sawtooth portion **56** are all light transmissive. Any number of sawteeth **59** may be used within a sawtooth portion of a given length. Lens **44** may be formed as a single piece or, in the alternative, as separate components coupled together.

Funnel portion **58** is designed to have a TIR surface. The TIR surface reflects light such that light exits from lens **44** as close to 90 degrees to a longitudinal package axis **43** of LED package **40** as possible. In one implementation, approximately 33% of the light emitted from LED chip **52** is reflected off the TIR surface of funnel-shaped portion **58** of lens **44**. A metallization layer (e.g., aluminum) may be placed on top of funnel portion **58** to prevent light transmission through the TIR surface. A coating or film (e.g., a U.V. inhibitor) may be placed on top of the funnel portion **58** to prevent degradation of the lens as PC degrades in the presence of U.V. light.

The interface between lens **44** and LED package base **42** may also be sealed using any well-known sealant, such as Room Temperature Vulcanizing (RTV) or the like.

FIG. **5**B illustrates a cross-sectional view of alternative mating of lens **44** to housing **46** of LED package base **42**. For clarity, LED chip **52** and other features of base **42** are not shown. Lens **44** may also be attached to LED package base **42** by various attachment methods, including but not limited to snap-fitting, friction-fitting, heat staking, adhesive bonding, and ultra-sonic welding. The features of lens **44**, as shown in FIG. **5**B, are applicable to lenses that are either formed as a separate component or encapsulated onto LED package base **42**. FIG. **5**C illustrates a close-up of the lens/housing mating of FIG. **5**B. Surface S may snap fit into surface R. Surface S may friction fit tight with surface R. Surface T may be welded to surface U using various methods including, without limitation, plastic welding, sonic welding, and linear welding. Sealing or bonding involves several possible combinations, such as surface S and/or T of lens **44** being sealed/bonded to surface R and/or U of housing **46**.

FIG. **5**D illustrates a cross-sectional view of a lens cap **55** mating to a conventional LED package **10** with a hemispherical lens **12**. Lens cap **55** may be affixed to lens **12** of LED package **10** by an optical adhesive, for example. Lens cap **55** includes a refractive portion **56** (which may, but does not necessarily, include one or more sawteeth as shown) and reflective funnel portion **58** that may contain the same and/or similar features that operate in the same and/or similar manner, as described above and below, as refractive and TIR portions **56**, **58** of lens **44**.

FIGS. **5**E, **5**F and **5**G illustrates ray-traces of light through lenses of various curvatures on the top surface of the lens. The features shown in FIGS. **5**E–**5**G are applicable to lenses that are injection molded, cast or otherwise formed. In one implementation, approximately 33% of the light emitted from LED chip **52** (not shown; light is shown emitted from die focal point F) is reflected off the TIR surface I. FIG. **5**E illustrates a curved funnel-shaped portion **58** where Surface I is defined from a curve that maintains an angle greater than the critical angle for TIR but directs the light out of the lens roughly at 90 degrees to longitudinal package axis **53**. FIG. **5**F illustrates a bent-line funnel-shaped portion **58** where Surface I is defined from a line bent into two linear portions, each portion at an angle greater than the critical angle for TIR but directs the light out of the package roughly at 90 degrees to the package axis. FIG. **5**G illustrates a linear funnel-shaped portion **58** where Surface I is defined by a straight line at an angle greater than the critical angle for TIR but directs the light out of the package roughly at 90 degrees to the package axis.

In FIGS. **5**E–**5**G, Surface H works with surface I to emit light perpendicular to longitudinal package axis **53**. The angle defined by surface I relative to the die is roughly 80 degrees. Surfaces A, B, C, D & E have surface normals such that the incident light ray is refracted out of the lens at approximately 90 degrees to the longitudinal package axis **53**. Surfaces F, G & H are approximately parallel to direct incident light rays in order to minimize the amount of direct light transmitted through these surfaces. Surfaces below line N refract light out of the package. Surfaces above line M will direct light out of the lens through a combination of TIR and refraction. Lines's M & N need to be in close proximity of each other to optimize side emission and minimize emission in the longitudinal direction. FIGS. **5**E–**5**G show two zones: zone refraction at approximately 45 degrees or more from longitudinal package axis **53** and zone TIR/refraction at up to approximately 45 degrees from longitudinal package axis **53**. For example, in FIGS. **5**E–**5**G, an approximately 40 degree TIR/refraction zone is shown. The interface between the two zones is approximately 45 degrees from the longitudinal package axis **53**. A distance X between Line M and Line N is kept at a minimum in order to optimize the side extraction of light from the lens. Line M may equal Line N (i.e., X=0).

FIG. **6** illustrates a cross-section of the emission of light from LED package **40** of FIG. **4**. Lens **44** of LED package **40** creates a radiation pattern **62** roughly perpendicular to longitudinal package axis **66** of LED package **40**. In FIG. **6**, this radiation pattern **62** is approximately perpendicular to LED package axis **66** and illustrates relative light intensity and distribution. This field of illumination **62** surrounds LED package **40** and is roughly disk-or toroidal-shaped. Light is emitted from lens **44** approximately parallel to an optical plane **64**.

The side-emission of light allows even a single LED package **40** to illuminate multiple light guides **72**, as seen in FIG. **7**A, for example. FIG. **7**A. illustrates two planar light guides placed nearly end-to-end with space for at least one LED package **40** between light guides **72**. The side-emission of light from the LED package **40** allows light to enter each light guide **72**. The LED package **40** may also be inserted into the body of light guide **72**. Light guides of various shapes may be used. The sides along the length of the light guides may be planar or taper. For example, a single side emitting LED package **40** may be placed at the center of a disk-shaped light guide (not shown). As light is emitted from the side of LED package **40** over 360 degrees (i.e., in all directions from the center of LED package **40**), the light enters the light guide and is refracted and reflected throughout the entire light guide (not shown).

The light guide can be made from optically transmissive materials, including but not limited to PC or PMMA. The light guide may be of constant thickness or tapered. Side emission of light allows efficient illumination of thin light guides with a thickness in the optimum range of 2 to 8 mm. FIG. **7**B illustrates an example of a light guide **73** with a thickness of 5.0 mm which is greater than the height of lens **44**. As the thickness of light guide **73** is greater than the height of the lens **44**, a blind-hole **94** may be used in light guide **73** to allow coupling of the LED package **40**. The dimensions of lenses **44** of FIGS. **7**B, **7**C & **7**D are measured from the focal point F of lens **44**. FIG. **7**C illustrates an example of a light guide **75** with a thickness of 4.5 mm and equal to the height of lens **44**. As the thickness of light guide **75** is equal to the height of lens **44**, a through-hole **96** may be used in light guide **75** to allow coupling of LED package **40**. FIG. **7**D illustrates side-emission of light from the LED of FIG. **4** into a light guide **77** thinner than the height of lens **44**. As the thickness of light guide **77** is less than the height of lens **44**, a through-hole **96** must be used in the light guide **77** to allow coupling of LED package **40**. Even though light guide **77** is thinner than the height of lens **44**, a large portion of the light emitted from LED chip **52** will still be directed into light guide **77** as the bulk of the light emitted from LED chip **52** is emitted from the sides of lens **44**. The large portion of the light emitted from lens **44** is targeted toward a light guide **77** that is positioned midway up the height of the lens. For example, the light emitted out the side of lens **44** near the top will be directed slightly downward and the light emitted out the side of lens **44** near the bottom will be directed slightly upward. The portion of light directed into light guide. **77** decreases as the thickness of light guide **77** relative to lens **44** decreases. Light guide **77** may be any shape including, without limitation, straight, tapered, rectangular, round or square.

It should be understood that the dimensions shown in FIGS. **7**B–**7**D are meant to be illustrative but not limiting. In

other implementations lenses and light guides may have dimensions either larger or smaller than those of the illustrated implementations.

FIG. **8** illustrates a perspective view of an end-portion of a planar light guide **82**. The side emitting LED package **40** allows LED package **40** to be placed inside light guide **82**. One or more holes **86** are made in the body of light guide **82** with a corresponding number of LED assemblies **40** placed within holes **86**. Holes **86** may be made to any desired depth in light guide **82**, including but not limited to the entire thickness of light guide **82**. Lens **44** of LED package **40** may not touch light guide **82**. A reflective coating or film **84** may be placed on at least one of the ends of light guide **82** to increase the internal illumination of light guide **82**.

FIG. **9**A illustrates a side-emitting LED package **40** mounted in a blind-hole **94** of a planar light guide **82**. Top surface **91** of blind-hole **94** is approximately parallel with top surface **95** of planar light guide **82**. Top surface **91** of blind-hole **94** may be coated with a reflective coating or film to reflect light in order to allow for a thinner light guide package with a similar coupling efficiency.

FIG. **9**B illustrates a side-emitting LED package **40** mounted in a funnel-shaped blind-hole **98** of a planar light guide **82**. The top surface **93** of funnel-shaped blind-hole **98** is approximately parallel with funnel-shaped portion **58** of lens **44** of LED package **40**. Top surface **93** of blind-hole **98** may be coated to reflect light in order to allow for a thinner light guide package with a similar coupling efficiency. The blind hole can have a flat, funnel or curved surface to assist with redirecting light emitted from the LED into the light guide.

FIG. **9**C illustrates a side-emitting LED package **40** mounted in a v-shaped blind-hole **97** of a planar light guide **82**. The v-shaped top surface **99** of the blind-hole **97** is approximately parallel with funnel-shaped portion **58** of lens **44** of LED package **40**. The blind hole can have a flat, funnel or curved surface to assist with redirecting light emitted from the LED into the light guide. The top surface **99** of blind-hole **97** may be coated to reflect light in order to allow for a thinner light guide package with a similar coupling efficiency.

FIG. **10** illustrates a side-emitting LED package **40** mounted in a through-hole **96** of a planar light guide **82**. Through-hole **96** allows LED package **40** to be mounted approximately perpendicular with light guide **82**.

FIG. **11** illustrates a conventional LED/reflector arrangement. It is known to use an LED package **10** with a hemispherical lens **12** in combination with a deep reflector **92**. The deep shape of the cavity of reflector **92** collimates light emitted from the hemispherical lens **12** of LED package **10**. This deep reflector cavity is required to control the light.

As seen in FIG. **12**, a shallow, large-area reflector **102** can be used in combination with a side-emitting LED package **40** to emit light over a broader area than a conventional LED package **10**. The longitudinal package axis **116** of the lens is approximately parallel to a radial axis **122** of reflector **102**. The side-emission of light allows the walls of reflector **102** to be less deep than conventional reflectors **92** (FIG. **11**). Light is emitted from lens **144** roughly perpendicular to longitudinal package axis **116** of LED package **40**. Side-emitting LED package **40** allows for very high collection efficiencies with shallow large area reflectors compared to conventional LEDs. Shallow reflectors **102** collimate emitted light over a broader area than narrow, deep reflectors **92** used in combination with conventional LED assemblies **10**. Shallow, large-area reflector **102** may be made of BMC bulk molding compound, PC, PMMA, PC/PMMA, and PEI. A reflective film **120** covering the inside of reflector **102** could be metallized, sputtered, or the like with highly reflective materials including, for example, aluminum (Al) and nickel chrome (NiCr). Side-emitting LEDs can achieve higher collection efficiencies with deep or shallow reflectors than the conventional LED/deep reflector combination.

Although the LED packages and light-emitting devices disclosed above include a lens **44** having several sawteeth, other embodiments may include a lens having only one sawtooth or no sawteeth. Referring to FIG. **13**, for example, in accordance with one embodiment, a light-emitting device **150** includes a lens **152** similar to but differing from lens **44** disclosed above. In particular, lens **152** includes a funnel shaped portion **58** having a reflecting (e.g., totally internally reflecting) surface I and a refracting surface H, but does not include a refractive sawtooth portion such as sawtooth portion **56** of lens **44** (FIG. **5**A). Instead, lower portion **154** of lens **152** has a refracting surface **156** extending as a smooth curve from refracting surface H to a bottom surface **158** of lens **152**. If volume **54** is under vacuum or contains a gas, then bottom surface **158** of lens **152** may be considered to include the interface between volume **54** and the other portions of lens **152**. Alternatively if volume **54** includes a non-gaseous material such as a solid, liquid, or gel, then bottom surface **158** may be considered to include the interface of such material with LED package base **42** and with LED **52**.

Similarly to lens **44** disclosed above, lens **152** may be symmetrical (e.g., cylindrically symmetrical) about a central axis **43**. Reflecting surface I of lens **152** may have shapes such as, for example, those described above and depicted in FIGS. **5**E–**5**G for surface I of lens **44**. Lens **152** may be formed from any of the materials and fabricated by any of the methods described above as suitable for fabrication of lens **44**.

Referring now to the ray traces illustrated in FIG. **14** as well as to FIG. **13**, light emitted by a light-emitting semiconductor device such as LED **52** located approximately at the focal point F of lens **152** may enter lens **152** through bottom surface **158** of the lens. Light emitted from near focal point F that is directly incident on reflecting surface I is reflected from surface I to refracting surface H and refracted by surface H to exit lens **152** in a direction substantially perpendicular to the central axis **43** of the lens. Light emitted from near focal point F that is directly incident on refracting surface **156** is refracted by surface **156** to also exit lens **152** in a direction substantially perpendicular to axis **43**.

For convenience of illustration, the light rays illustrated in FIG. **13** and in the other figures are not shown as refracted at the interface of volume **54** with the other portions of lens **152**. Generally, refraction of such light rays at this interface will occur due to a (typically small) difference in the refractive index between the material in volume **54** and the material of the other portions of the lens. The shapes of surfaces I, H, and **156** are typically chosen to take such refraction into account.

FIG. **15** illustrates a cross-sectional view of lens **152** superimposed over a cross-sectional view of a lens **160** (dashed line) that includes a single refractive sawtooth. Aside from having only a single refractive sawtooth, lens **160** is substantially similar in structure and function to lens **44** disclosed above. The implementations of lens **152** and **160** shown in FIG. **15** are optimized for use with substantially similar LEDs in substantially similar packages. Hence,

the lowermost portions of lens **152** and lens **160** are substantially identical in size and shape.

As FIG. **15** shows, the diameter D1 of the funnel shaped portion **58** of lens **152** is substantially less than the diameter D2 of its lower portion **154**. In contrast, the diameter of the funnel shaped portion of lens **160** is approximately equal to the diameter of its lowermost portion. In some implementations, the relatively smaller diameter of the funnel shaped portion **58** of lens **152** makes lens **152** easier and less expensive than lens **160** (or other lenses including refractive sawteeth) to manufacture, to insert into and to attach to an LED package, and to fill with, for example, silicone or resin.

Light-emitting device **150** may be employed with, for example, light guides and shallow, large-area reflectors similarly as disclosed above for other LED packages and light-emitting devices.

In another embodiment (FIG. **16**), a lens cap **162** mates to a conventional LED. package **10** having a hemispherical lens **12**. Lens cap **162** may be attached to lens **12** by an optical adhesive, for example. Lens cap **162** includes a funnel shaped portion **58** having a reflecting (e.g., totally internally reflecting) surface I and a refracting surface H, as well as a lower portion **154** having a refracting surface **156** extending as a smooth curve from refracting surface H to a bottom surface **158**. Lens cap **162** may have the shapes and symmetries disclosed above for lens **152**, and may be formed from any of the materials and by any of the methods described above as suitable for fabrication of lenses **44** and **152**. As described above with respect to lens **152**, light emitted by LED package **10** is directed by surfaces I, H, and **156** of lens cap **162** in a direction substantially perpendicular to a central axis **43** of the lens cap.

The above-described embodiments of the present invention are meant to be illustrative and not limiting. It will thus be obvious to those skilled in the art that various changes and modifications may be made without departing from this invention in its broader aspects. Therefore, the appended claims encompass all such changes and modifications as falling within the true spirit and scope of this invention.

We claim:

1. A lens comprising:

a bottom surface;

a reflecting surface;

a first refracting surface obliquely angled with respect to a central axis of the lens; and

a second refracting surface extending as a smooth curve from the bottom surface to the first refracting surface;

wherein light entering the lens through the bottom surface and directly incident on the reflecting surface is reflected from the reflecting surface to the first refracting surface and refracted by the first refracting surface to exit the lens in a direction substantially perpendicular to the central axis of the lens, and

wherein light entering the lens through the bottom surface and directly incident on the second refracting surface is refracted by the second refracting surface to exit the lens in a direction substantially perpendicular to the central axis of the lens.

2. The lens of claim **1**, wherein at least a portion of the bottom surface is perpendicular to the central axis.

3. The lens of claim **1**, wherein the reflecting surface reflects by total internal reflection.

4. The lens of claim **1**, wherein the reflecting surface is a surface of a funnel-shaped portion of the lens.

5. The lens of claim **1**, wherein the reflecting surface, the first refracting surface, and the second refracting surface are each portions of surfaces having cylindrical symmetry about the central axis.

6. A light-emitting device comprising:

a light-emitting semiconductor device; and

a lens comprising:

a bottom surface;

a reflecting surface;

a first refracting surface obliquely angled with respect to a central axis of the lens; and

a second refracting surface extending as a smooth curve from the bottom surface to the first refracting surface;

wherein light emitted by the semiconductor device, entering the lens through the bottom surface, and directly incident on the reflecting surface is reflected from the reflecting surface to the first refracting surface and refracted by the first refracting surface to exit the lens in a direction substantially perpendicular to the central axis of the lens, and

wherein light emitted by the semiconductor device, entering the lens through the bottom surface, and directly incident on the second refracting surface is refracted by the second refracting surface to exit the lens in a direction substantially perpendicular to the central axis of the lens.

7. The light-emitting device of claim **6**, wherein at least a portion of the bottom surface of the lens is perpendicular to the central axis.

8. The light-emitting device of claim **6**, wherein the reflecting surface reflects by total internal reflection.

9. The light-emitting device of claim **6**, wherein the reflecting surface is a surface of a funnel-shaped portion of the lens.

10. The light-emitting device of claim **6**, wherein the reflecting surface, the first refracting surface, and the second refracting surface of the lens are each portions of surfaces having cylindrical symmetry about the central axis.

11. A lens cap comprising:

a bottom surface attachable to a lens;

a reflecting surface;

a first refracting surface obliquely angled with respect to a central axis of the lens cap; and

a second refracting surface extending as a smooth curve from the bottom surface to the first refracting surface;

wherein light entering the lens cap through the bottom surface and directly incident on the reflecting surface is reflected from the reflecting surface to the first refracting surface and refracted by the first refracting surface to exit the lens cap in a direction substantially perpendicular to the central axis of the lens, and

wherein light entering the lens cap through the bottom surface and directly incident on the second refracting surface is refracted by the second refracting surface to exit the lens cap in a direction substantially perpendicular to the central axis of the lens cap.

12. The lens cap of claim **11**, wherein at least a portion of the bottom surface is perpendicular to the central axis.

13. The lens cap of claim **11**, wherein the reflecting surface reflects by total internal reflection.

14. The lens cap of claim **11**, wherein the reflecting surface is a surface of a funnel-shaped portion of the lens cap.

15. The lens cap of claim **11**, wherein the reflecting surface, the first refracting surface, and the second refracting surface are each portions of surfaces having cylindrical symmetry about the central axis.

* * * * *