IBIS5-B-1300
CYII5FM1300AB

1.3 MP CMOS Image Sensor

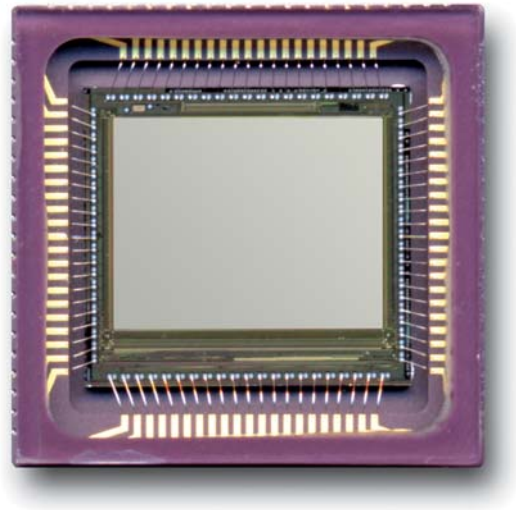

Table 1. Key Performance Parameters

Parameter	Typical Value
Active Pixels	1280 (H) x 1024 (V)
Pixel Size	6.7 µm x 6.7 µm
Optical format	2/3 inch
Shutter Type	Snapshot (Global) Shutter Rolling Shutter
Maximum Data Rate / Master Clock	40 MPS / 40 MHz
Frame rate	27 fps (1280 x 1024) 106 fps (640 x 480)
ADC resolution	10-bit, on-chip
Sensitivity (@ 650 nm)	715 V.m2/W.s 8.40 V/lux.s
S/N Ratio	64 dB
Full Well Charge	62.500 e–
Temporal Noise	40 e–
Dark current	7.22 mV/s
High Dynamic Range	Multiple Slope
Supply Voltage	Analog: 3.0V–4.5V Digital: 3.3V I/O: 3.3V
Power consumption	175 mW
Operating temperature	–30°C to +65°C
Color Filter Array	Mono RGB Bayer Pattern
Packaging	84-pins LCC

Description

The IBIS5-B-1300 is a solid state CMOS image sensor that integrates the functionality of complete analog image acquisition, digitizer and digital signal processing system on a single chip. This 1.3-mega pixel (1280 x 1024) CMOS active pixel sensor dedicated to industrial vision applications features both rolling and snapshot (or global) shutter. Full frame readout time is 36 ms (max. 27.5 fps), and readout speed can be boosted by windowed region of interest (ROI) readout. High dynamic range scenes can be captured using the double and multiples slope functionality. The sensor is available in a Monochrome version or Bayer (RGB) patterned color filter array.

User programmable row and column start/stop positions allow windowing down to a 2x1 pixel window for digital zoom. Sub sampling or viewfinder mode reduces resolution while maintaining the constant field of view and an increased frame rate. The analog video output of the pixel array is processed by an on-chip analog signal pipeline. Double Sampling (DS) eliminates the fixed pattern noise. The programmable gain and offset amplifier maps the signal swing to the ADC input range. A 10-bit ADC converts the analog data to a 10-bit digital word stream. The sensor uses an 2-wire, I2C™-compatible, interface, a 3-wire Serial-Parallel (SPI) interface, or a 16-bit parallel interface. It operates with a 3.3V power supply and requires only one master clock for operation up to 40 MHz. It is housed in an 84-pin ceramic LCC package.

Applications

- ·Machine vision
- ·Inspection
- ·Robotics
- ·Traffic monitoring

Architecture and Operation

In this part the most important blocks of the sensor are described in more detail.

Floor Plan

Figure 1. Block Diagram of the IBIS5-B-1300 Image Sensor

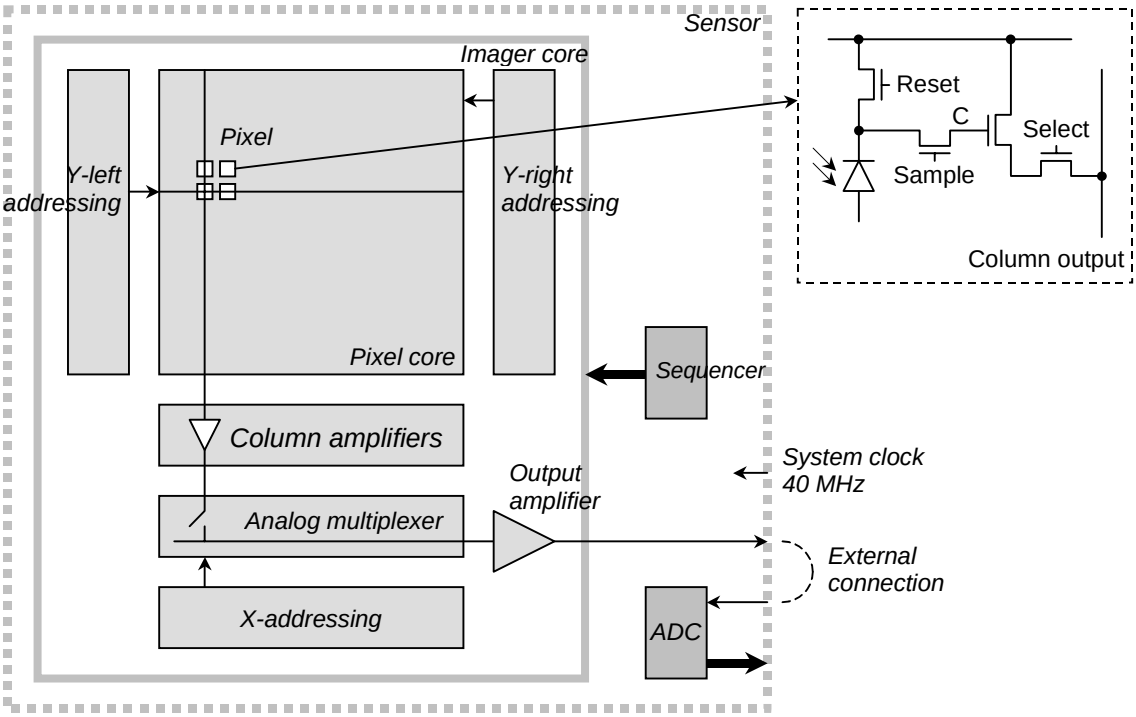

Figure 1 shows the architecture of the IBIS5-B-1300 image sensor. It consists basically of a pixel array, one X- and two Y-addressing registers for the readout in X- and Y-direction, column amplifiers that correct for the fixed pattern noise, an analog multiplexer, and an analog output amplifier.

The left Y-addressing register is used for readout operation. The right Y-addressing register is used for reset of pixel rows. In multiple slope synchronous shutter mode, the right Y-addressing register resets the whole pixel core with a lowered reset voltage. In rolling curtain shutter mode, the right Y-addressing register is used for the reset pointer in single and double slope operation to reset 1 pixel row.

Most of the signals for the image core are generated by the on-chip sequencer. Some basic signals (like start/stop integration, line and frame sync signals, etc.) have to be generated externally.

A 10-bit ADC is implemented on chip but electrically isolated from the image core. The analog pixel output has to be routed to the analog ADC input on the outside.

Pixel

The pixel architecture and the color filter array are described below.

Architecture

The pixel architecture used in the IBIS5-B-1300 is a 4-transistor pixel as shown in Figure 2. The pixel has been implemented using the high fill factor technique as patented by Cypress (US patent No. 6,225,670 and others). The 4T-pixel features a snapshot shutter but can also emulate the 3T-pixel by continuously closing sampling switch M2. Using M4 as a global sample transistor for all pixels enables the snapshot shutter mode. Due to this pixel architecture, integration during read out is not possible in synchronous shutter mode.

Figure 2. Architecture of the 4T-pixel

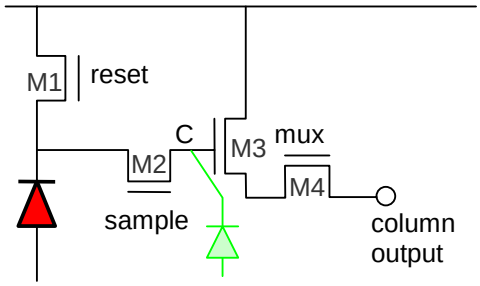

IPR2025-00339
Exhibit 2008

Color Filter Array

The IBIS5-B-1300 can also be processed with a Bayer RGB color pattern. Pixel (0,0) has a green filter and is situated on a green-blue row. Green1 and green2 have a slightly different spectral response due to cross talk from neighboring pixels. Green1 pixels are located on a blue-green row, green2 pixels are located on a green-red row. Figure 4 below shows the response of the color filter array as function of the wavelength. Note that this response curve includes the optical cross talk of the pixels.

Figure 3. Color Filter Arrangement on the Pixels

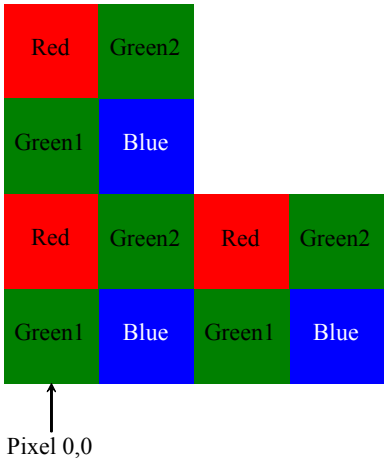

Frame Rate

The pixel rate for this sensor is high enough to support a frame rate of >100 Hz for a window size of 640 x 480 pixels (VGA format). Taking into account a row blanking time of 3.5 ms (as baseline, see also "Internal Clock Granularities (bits 4, 5, 6 and 7)." on page 13), this requires a minimum pixel rate of nearly 40 MHz. The final bandwidth of the column amplifiers, output stage, and others is determined by external bias resistors. With a nominal pixel rate of 40 MHz, a full frame rate of a little more than 27 frames per second is obtained.

The frame period of the IBIS5-B-1300 sensor depends on the shutter type.

Rolling Shutter

=> Frame period = (Nr. Lines * (RBT + pixel period * Nr. Pixels))

with:

Nr. Lines: Number of Lines read out each frame (Y).

Nr. Pixels: Number of pixels read out each line (X).

RBT: Row Blanking Time = 3.5 ms (typical).

Pixel period: 1/40 MHz = 25 ns.

Example Read out time of the full resolution at nominal speed (40-MHz pixel rate):

=> Frame period = (1024 * (3.5 ms + 25 ns * 1280)) = 36.4 ms => 27.5 fps.

Snapshot shutter

=> Frame period = Tint + Tread out

= Tint + (Nr. Lines * (RBT + pixel period * Nr. Pixels))

with:

Tint: Integration (exposure) time.

Nr. Lines: Number of Lines read out each frame (Y).

Nr. Pixels: Number of pixels read out each line (X).

Figure 4. Color Filter Response

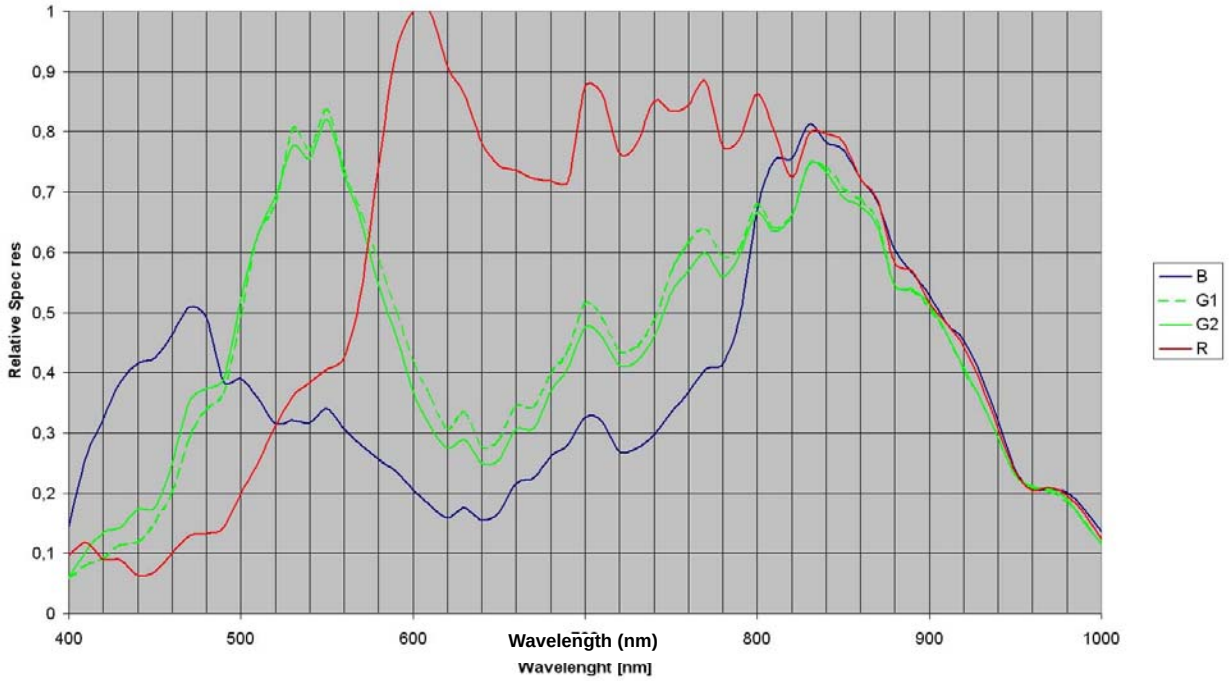

IPR2025-00339
Exhibit 2008

RBT: Row Blanking Time = 3.5 ms (typical).

Pixel period: 1/40 MHz = 25 ns.

Example Read out time of the full resolution at nominal speed (40 MHz pixel rate) with an integration time of 1 ms:

=> Frame period = 1 ms + (1024 * (3.5 ms + 25 ns * 1280)) = 37.4 ms => 26.8 fps.

Region-Of-Interest (ROI) Read Out

Windowing can easily be achieved by uploading the starting point of the x- and y-shift registers in the sensor registers using the various interfaces. This downloaded starting point initiates the shift register in the x- and y-direction triggered by the Y_START (initiates the Y-shift register) and the Y_CLK (initiates the X-shift register) pulse. The minimum step size for the x-address is 2 (only even start addresses can be chosen) and 1 for the Y-address (every line can be addressed). The frame rate increases almost linearly when fewer pixels are read out. Table 2 gives an overview of the achievable frame rates (in rolling shutter mode) with various ROI dimensions.

Table 2. Frame Rate vs. Resolution

Image Resolution (X*Y)	Frame Rate [frames/s]	Frame Readout Time [ms]	Comment
1280 x 1024	27	36	Full resolution.
640 x 480	100	10	ROI read out.
100 x 100	1657	0.6	ROI read out.

Image Core Operation

Image Core Operation and Signalling

Figure 5 is a functional representation of the image core without sub-sampling and column/row swapping circuits. Most of the involved signals are not available from the outside because they are generated by the X-sequencer and SS-sequencer blocks.

The integration of the pixels is controlled by internal signals such as reset, sample, hold are generated by the on-chip SS-sequencer that is controlled with the external signals SS_START and SS_STOP. Reading out the pixel array starts by applying a Y_START together with a Y_CLOCK signal; internally this is followed by a calibration sequence to calibrate the output amplifiers (during the row blanking time); signals necessary to do this calibration are generated by the on-chip X-sequencer. This calibration sequence takes typically 3.5 µs and is necessary to remove Fixed Pattern Noise of the pixels and of the column amplifiers themselves by means of a Double Sampling technique. After the row blanking time the pixels are fed to the output amplifier. The pixel rate is equal to the SYS_CLOCK frequency.

Image Core Supply Considerations

The image sensor has several supply voltages:

VDDH is the voltage that controls the sample switches and must always be the highest voltage that is applied to the chip.

The VDDR_LEFT voltage is the highest (nominal) reset voltage of the pixel core.

Figure 5. Image Core

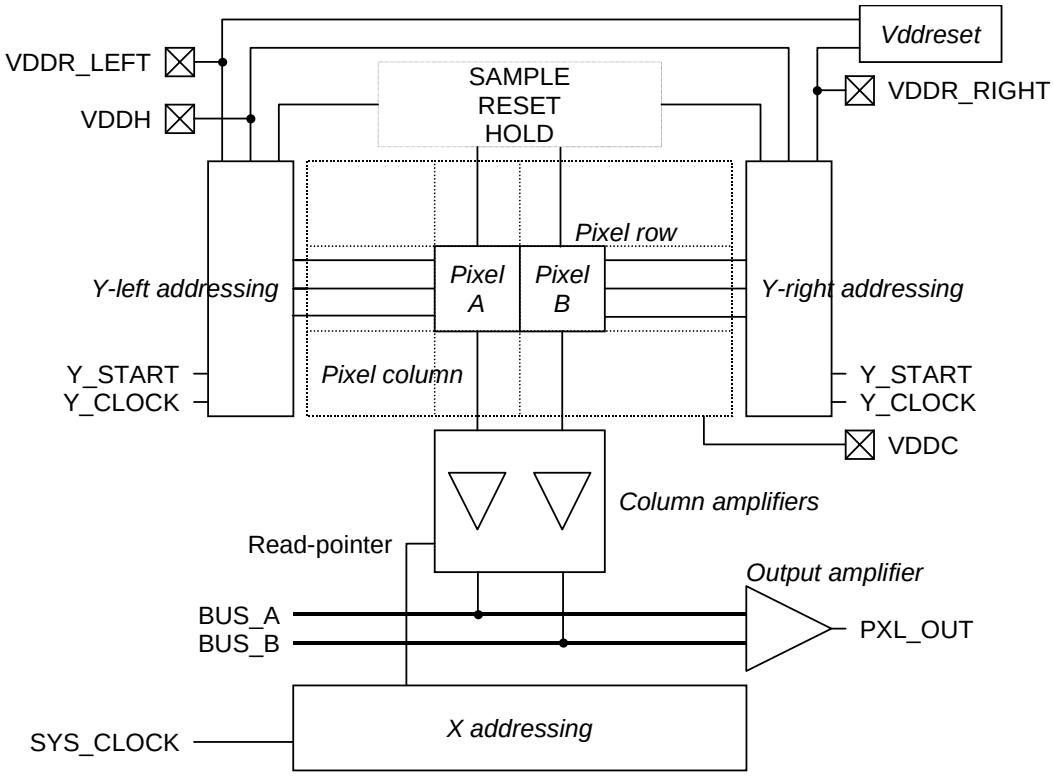

The VDDR_RIGHT voltage is generated from the VDDR_LEFT voltage using a circuit that can be programmed with the KNEEPOINT_LSB/MSB bits in the sequencer register (see also "Pixel Reset Knee-point for Multiple Slope Operation (bits 8, 9, and 10)." on page 14). By setting the VDDR_RIGHT_EXT bit in the SEQUENCER register, the VDDR_RIGHT pin can be disconnected from the circuit and an external voltage can be applied to supply the multiple slope reset voltage. When no external voltage is applied (recommended) the VDDR_RIGHT pin should be connected to a capacitor (recommended value = 1µF). VDDC is the supply of the pixel core. VDDA is the analog supply of the image core and periphery. VDDD is the digital supply of the image core and periphery.

Note that the IBIS5-B-1300 image sensor has no power rejection circuitry on-chip. As a consequence all variations on the analog supply voltages can contribute to random variations (noise) on the analog pixel signal, which is seen as random noise in the image. During the camera design precautions have to be taken to supply the sensor with very stable supply voltages to avoid this additional noise. Especially the analog supplies of the pixel array (VDDR_LEFT, VDDH and VDDC) are vulnerable for this.

Snapshot Shutter Supply Considerations

When using the IBIS5-B-1300 sensor in snapshot shutter mode only the recommended supply voltage settings are listed below in Table 3.

Table 3. Snapshot Shutter Recommended Supply Settings

Parameter	Description	Typ.	Unit
VDDH	Voltage on HOLD switches.	+4.5	V
VDDR_LEFT	Highest reset voltage.	+4.5	V
VDDC	Pixel core voltage.	+3.3	V
VDDA	Analog supply voltage of the image core.	+3.3	V
VDDD	Digital supply voltage of the image core.	+3.3	V
GNDA	Analog ground.	0	V
GNDD	Digital ground.	0	V
GND_AB	Anti-blooming ground.	0	V

Dual Shutter Supply Considerations

With the supply settings listed in Table 3 some fixed column non-uniformities (FPN) can be seen when operating in rolling shutter mode. If a dual shutter mode (both rolling and snapshot shutter) is required during operation one needs to apply the supply settings listed in Table 4 below to achieve the best possible image quality.

Table 4. Dual Shutter Recommended Supply Settings

Parameter	Description	Typ.	Unit
VDDH	Voltage on HOLD switches.	+4.5	V
VDDR_LEFT	Highest reset voltage.	+4.5	V
VDDC	Pixel core voltage.	+3.0	V
VDDA	Analog supply voltage of the image core.	+3.3	V
VDDD	Digital supply voltage of the image core.	+3.3	V
GNDA	Analog ground.	0	V
GNDD	Digital ground.	0	V
GND_AB	Anti-blooming ground.	0	V

Image Core Biasing Signals

Table 5 summarizes the biasing signals required to drive the IBIS5-A-1300. For optimizations reasons with respect to speed and power dissipation of all internal block several biasing resistors are needed.

Each biasing signal determines the operation of a corresponding module in the sense that it controls the speed and power dissipation. The tolerance on the DC-level of the bias levels can vary ±150 mV due to process variations.

Table 5. Overview of Bias Signals

Signal	Comment	Related module	DC-level
DEC_CMD	Connect to VDDA with R = 50 kΩ and decouple to GNDA with C = 100 nF.	Decoder stage.	1.0V
DAC_VHIGH	Connect to VDDA with R = 0Ω.	High level of DAC.	3.3V
DAC_VLOW	Connect to GNDA with R = 0Ω.	Low level of DAC.	0.0V
AMP_CMD	Connect to VDDA with R = 50 kΩ and decouple to GNDA with C = 100 nF.	Output amplifier stage.	1.2V
COL_CMD	Connect to VDDA with R = 50 kΩ and decouple to GNDA with C = 100 nF.	Columns amplifiers stage.	1.0V
PC_CMD	Connect to VDDA with R = 25 kΩ and decouple to GNDA with C = 100 nF.	Pre-charge of column busses.	1.1V
ADC_CMD	Connect to VDDA with R = 50 kΩ and decouple to GNDA with C = 100 nF.	Analog stage of ADC.	1.0V
ADC_VHIGH	Connect to VDDA with R = 360Ω and decouple to GNDA with C = 100 nF.	High level of ADC.	2.7V
ADC_VLOW	Connect to GNDA with R = 1200Ω and decouple to GNDA with C = 100 nF.	Low level of ADC.	1.8V

IPR2025-00339 Exhibit 2008 Page 5 of 42

X-Addressing

Because of the high pixel rate, the X-shift register selects 2 columns at the time for readout, so it runs at half the system clock speed. All even columns are connected to bus A; all odd columns to bus B. In the output amplifier, bus A and bus B are combined into one stream of pixel data at system clock speed.

At the end of the row blanking time, the X_SYNC switch is closed while all other switches are open and the decoder output is fed to the register. The decoder loads a logical one in one of the registers and a logical zero in the rest. This defines the starting point of the window in the X direction. As soon as the X_SYNC signal is released, the register starts shifting from the start position.

When no sub-sampling is required, X_SUB is inactive. he pointer in the shift-register moves 1 bit at the time.

When sub-sampling is enabled, X_SUB is activated. The shift register moves 2 bits at the time. Taking into account that every register selects 2 columns, hence 2 pixels sub-sampling results in the pattern “XXOOXXOO” when 8 pixels are considered. Suppose the columns are numbered from left to right starting with 0 (zero) and sub-sampling is enabled:

If columns 1 and 2, 5 and 6, 9 and 10 … are swapped using the SWAP_12 switches, a normal sub-sampling pattern of “XOXOXOXO” is obtained.

If columns 3 and 4, 7 and 8, 11 and 12 … are swapped using the SWAP_30 switches, the pattern is “OXOXOXOX”.

If both the SWAP_12 and SWAP_30 switches are closed, pattern “OOXXOOXX” is obtained.

Because every register addresses 2 columns at the time, the addressable pixels range in sub-sample mode is from 0 to half the maximum number of pixels in a row (only even values). For instance: 0, 2, 4, 6, 8… 638.

Table 6. X–Sub-sample Patterns

X_SUB	X_SWAP12	X_SWAP30	Sub-sample Pattern
0	0	0	XXXXXXXX
1	0	0	XXOOXXOO
1	1	0	XOXOXOXO
1	0	1	OXOXOXOX
1	1	1	OOXXOOXX

Y-addressing

For symmetry reasons, the sub-sampling modes in the Y-direction are the same as in X-direction.

Table 7. Y–Sub-sample Patterns

Y_SUB	Y_SWAP12	Y_SWAP30	Sub-sample Pattern
0	0	0	XXXXXXXX
1	0	0	XXOOXXOO
1	1	0	XOXOXOXO

Figure 6. Column Structure

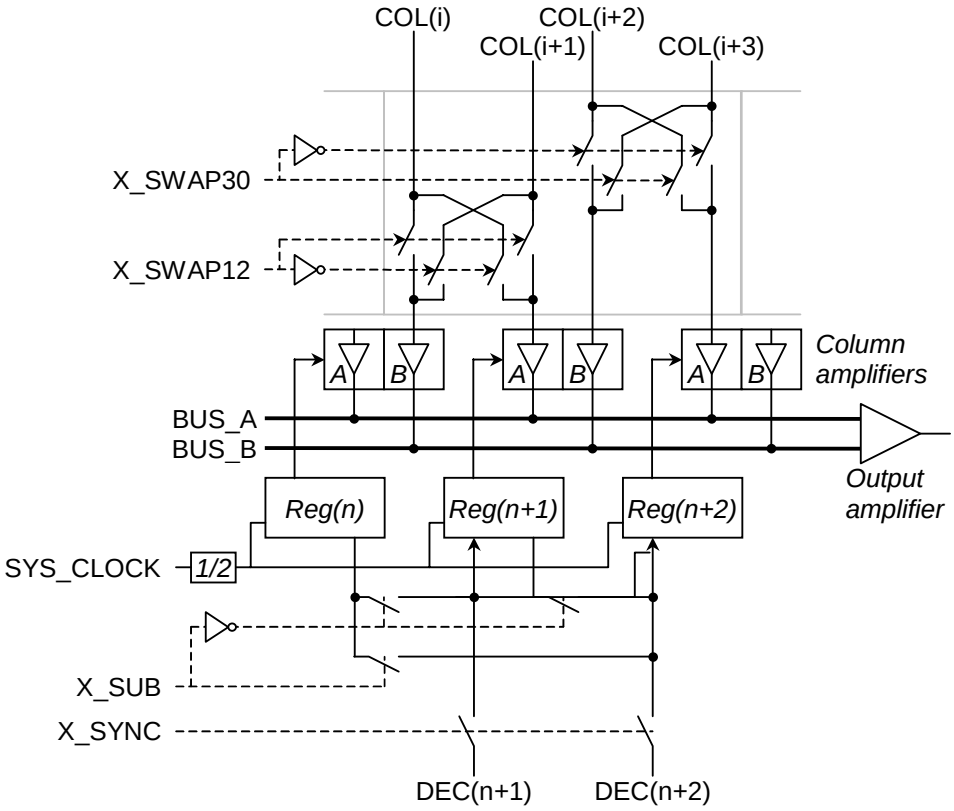

IPR2025-00339 Exhibit 2008 Page 6 of 42

Figure 7. Row Structure

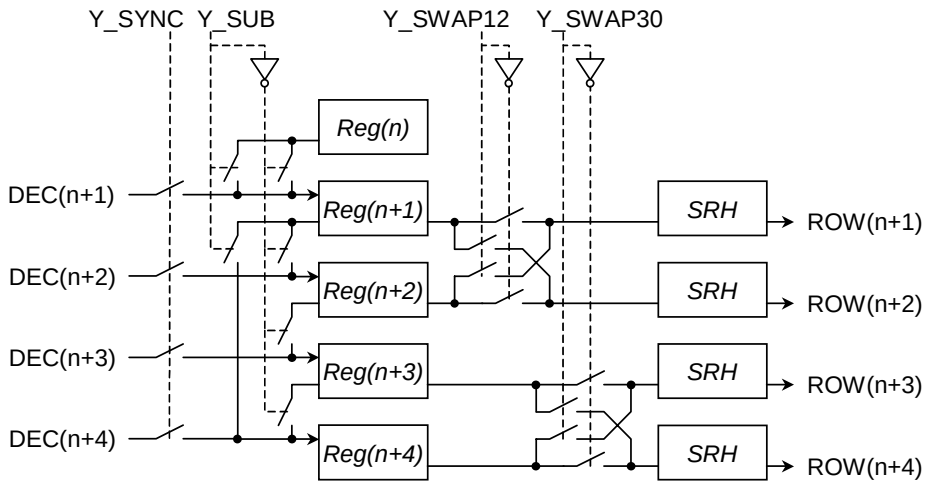

Table 7. Y–Sub-sample Patterns

1	0	1	OXOXOXOX
1	1	1	OOXXOOXX

In normal mode the pointer for the pixel row is shifted one at the time.

When sub-sampling is enabled, Y_SYNC is activated. The Y-shift register shifts 2 succeeding bits and skips the 2 next bits. This results in pattern “XXOOXXOO”.

Activating Y_SWAP12 results in pattern “XOXOXOXO”.

Activating Y_SWAP30 results in pattern “OXOXOXOX”.

Activating both Y_SWAP12 and Y_SWAP30 results in pattern “OOXXOOXX”.

The addressable pixels range when Y-sub sampling is enabled is: 0–1, 4–5, 8–9, 12–13, … 1020–1021

Output Amplifier

Architecture and Settings

The output amplifier stage is user-programmable for gain and offset level. Gain is controlled by 4-bit wide word; offset by a 7-bit wide word. Gain settings are on an exponential scale. Offset is controlled by a 7-bit wide DAC, which selects the offset voltage between 2 reference voltages (DAC_VHIGH and DAC_VLOW) on a linear scale.

The amplifier is designed to match the specifications of the output of the imager array. This signal has a data rate of 40 MHz and is located between 1.17V and 2.95V. The output impedance of the amplifier is 260Ω.

The output signal has a range between 1.17V and 2.95V, depending on the gain and offset settings of the amplifier. At unity gain and with a mid-range offset value, the amplifier outputs a signal in between 1.59V (light) and 2.70V (dark). This analog range should fit to the input range of the ADC, external or internal. The output swing in unity gain is approximately 1.11V and maximum 1.78V at the highest gain settings.

Figure 8 on page 8 shows the architecture of the output amplifier. The odd and even column amplifiers sample both pixel and reset value to perform a double sampling FPN -correction. There are 2 different offsets that can be adjusted using the on-chip DAC (7 bit): DAC_FINE and DAC_RAW. DAC_FINE is used to tune the difference between odd and even columns; DAC_RAW is used to add a general (both even and odd columns) to the FPN corrected pixel value. This pixel value is fed to the first amplifier stage which has an adjustable gain, controlled by a 4-bit word (“GAIN [0…3]”).

After this, a unity feedback amplifier buffers the signal and the signal leaves the chip. This 2nd amplifier stage determines the maximal readout speed, that is, the bandwidth and the slew rate of the output signal. The whole amplifier chain is designed for a data rate of 40 Mpix/s (@20 pF).

Output Amplifier Gain Control

The output amplifier gain is controlled by a 4-bit word set in the AMPLIFIER register (see section “Amplifier Register (6:0)” on page 15). An overview of the gain settings is given in Table 8.

Table 8. Overview Gain Settings

bits	DC Gain	bits	DC Gain
0000	1.37	1000	6.25
0001	1.62	1001	7.89
0010	1.96	1010	9.21
0011	2.33	1011	11.00
0100	2.76	1100	11.37
0101	3.50	1101	11.84
0110	4.25	1110	12.32
0111	5.20	1111	12.42

Setting of the DAC Reference Voltage

In the output amplifier, the offset can be trimmed by loading registers DACRAW_REG and DACFINE_REG. DAC_RAW is used to adjust the offset of the output amplifier and DAC_FINE is used to tune the offset between the even and odd columns. These registers are inputs for 2 DACs (see Figure 9 on page 8) that operate on the same resistor that is connected between pins DAC_VHIGH and DAC_VLOW. The range of the DAC is defined using a resistive division with R_{VHIGH}, R_{DAC} and R_{VLOW}.

IPR2025-00339 Exhibit 2008 Page 7 of 42

Figure 8. Output Structure

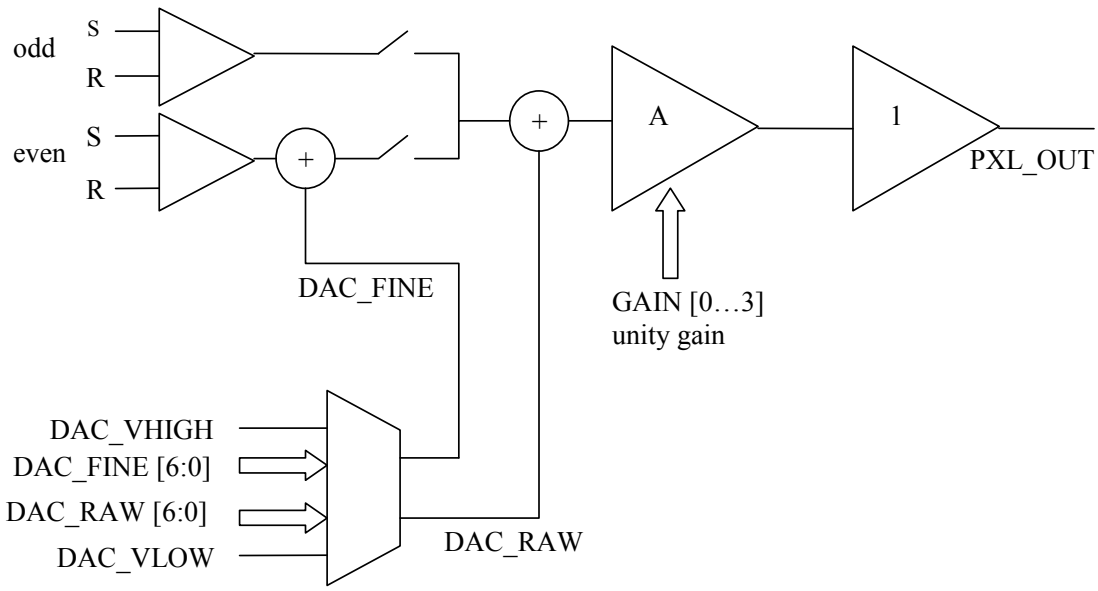

Figure 9. In- and External DAC Connections

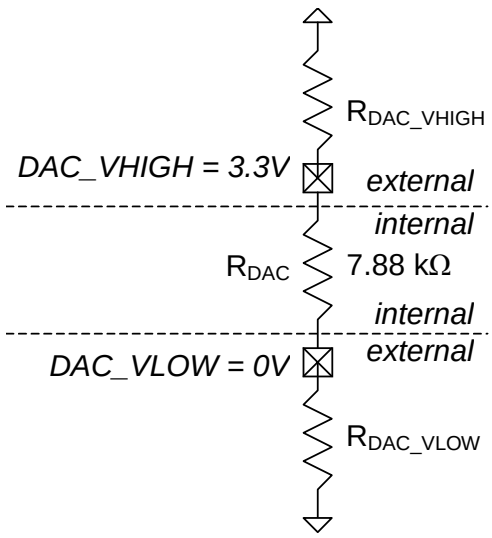

The internal resistor R_{DAC} has a value of approximately 7.88 kΩ.

The recommend resistor values for both DAC_VLOW and DAC_VHIGH are 0Ω.

Analog to Digital Converter

The IBIS5-B-1300 has a 10-bit flash analog digital converter running nominally at 40 Msamples/s. The ADC is electrically separated from the image sensor. The input of the ADC (ADC_IN; pin 69) should be tied externally to the output (PXL_OUT1; pin 28) of the output amplifier.

Table 9. ADC Specifications

Input range	1–3V[1]
Quantization	10 Bits
Nominal data rate	40 Msamples/s
DNL (linear conversion mode)	Typ. < 0.5 LSB
INL (linear conversion mode)	Typ. < 3 LSB
Input capacitance	< 20 pF
Power dissipation @ 40 MHz	Typ. 45 mA * 3.3V = 150 mW
Conversion law	Linear / Gamma-corrected

ADC Timing

At the rising edge of SYS_CLOCK the next pixel is fed to the input of the output amplifier. Due to internal delays of the SYS_CLOCK signal it takes approximately 20 ns before the output amplifier outputs the analog value of the pixel as shown in Figure 10 on page 9.

The ADC converts the pixel data on the rising edge of the ADC_CLOCK but it takes 2 clock cycles before this pixel data is at the output of the ADC. This pipeline delay is shown in Figure 10.

Note
1. The internal ADC range is typically 100 mV lower then the external applied ADC_VHIGH and ADC_VLOW voltages due to voltage drops over parasitic internal resistors in the ADC.

Figure 10. ADC Timing

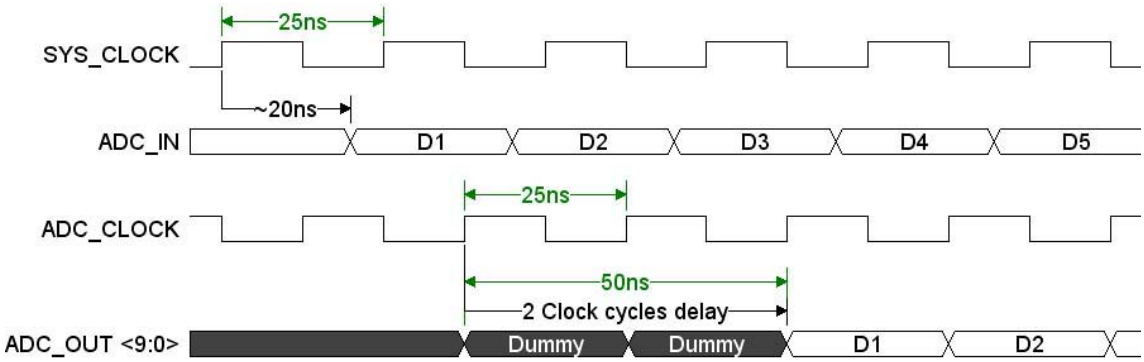

Due to these delays it is advised that a variable phase difference is foreseen between the ADC_CLOCK and the SYS_CLOCK to tune the optimal sample moment of the ADC.

Setting of the ADC Reference Voltages

Figure 11. In- and External ADC Connections

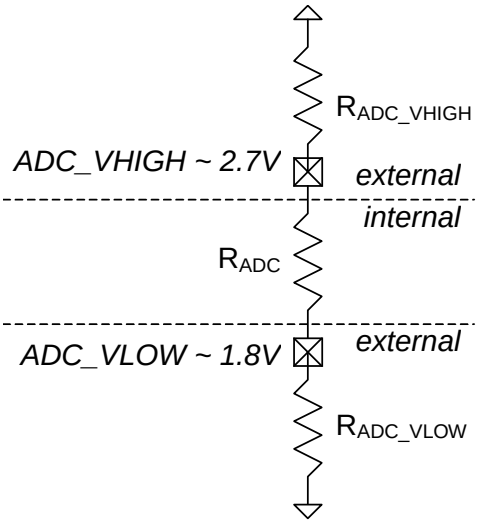

The internal resistor R_{ADC} has a value of approximately 585Ω. This results in the following values for the external resistors:

Resistor	Value (O)
R_{ADC_VHIGH}	360
R_{ADC}	585
R_{ADC_VLOW}	1200

Note that the recommended ADC resistors value yields in a conversion of the full analog output swing at unity gain (V_{DARK_ANALOG} < ADC_VHIGH and V_{LIGHT_ANALOG} > ADC_VLOW).

The values of the resistors depend on the value of R_{ADC}. The voltage difference between ADC_VLOW and ADC_VHIGH must be at least 1.0V to assure proper working of the ADC.

Non-linear and Linear Conversion Mode—"gamma" Correction

Figure 12 on page 10 shows the ADC transfer characteristic. The non-linear (exponential) ADC conversion is intended for gamma-correction of the images. It increases contrast in dark areas and reduces contrast in bright areas. The non-linear transfer function is given by:

$$Vin = ADC_VHIGH + (ADC_VHIGH - ADC_VLOW) * \frac{a*x + b*x^2}{a*1023 + b*1023^2}$$

With:

a = 5

b = 0.027

x = digital output code

Electronic Shutter Types

The IBIS5-B-1300 has 2 different shutter types: a rolling (curtain) shutter and a snapshot (synchronous) shutter.

Rolling (Curtain) Shutter

The name is due to the fact that the effect is similar to a curtain shutter of a SLR film camera. Although it is a pure electronic operation, the shutter seems to slide over the image. A rolling shutter is easy and elegant to implement in a CMOS sensor. As can be seen in Figure 13 on page 10, there are two Y shift registers. One of them points to the row that is currently being read out. The other shift register points to the row that is currently being reset. Both pointers are shifted by the same Y-clock and move over the focal plane. The integration time is set by the delay between both pointers.

In Figure 13, we schematically indicate the relative shift of the integration times of different lines during the rolling shutter operation. Each line is read and reset in a sequential way. The integration time is the same for all lines, but is shifted in time. The integration time can be varied through the INT_TIME register (in number of lines).

This indicates to us that all pixels are light sensitive at another period of time, which can cause some blurring if a fast moving object is captured.

When the sensor is set to rolling shutter mode, the input SS_START and SS_STOP must best be held low.

Figure 12. Linear and Non-linear ADC Conversion Characteristic

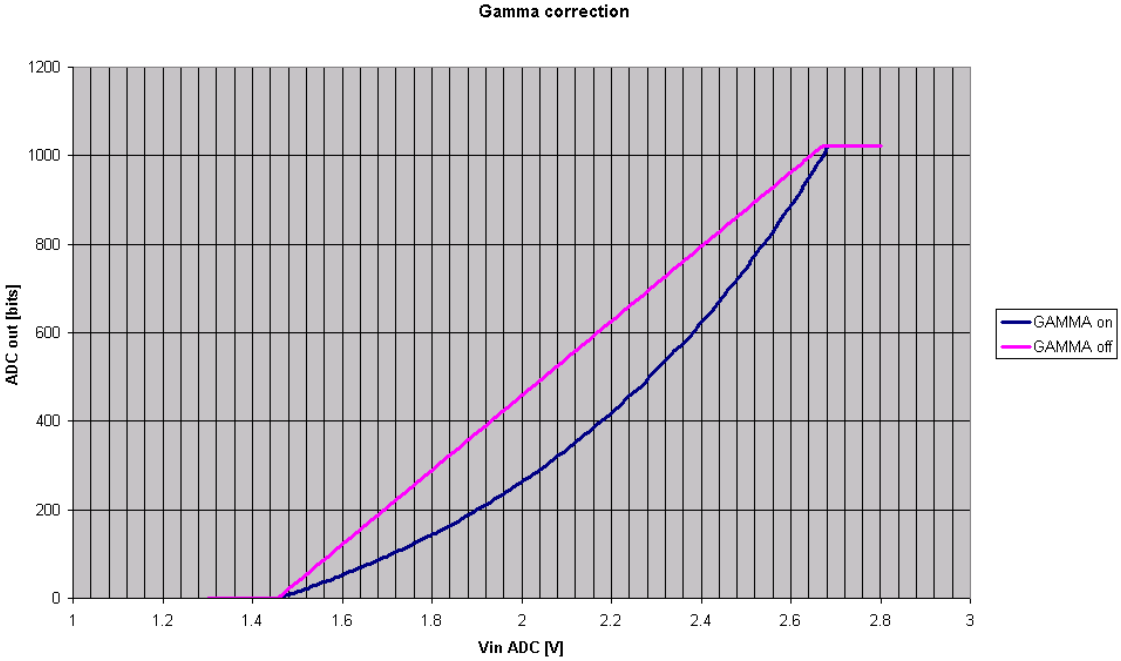

Figure 13. Rolling Shutter Operation

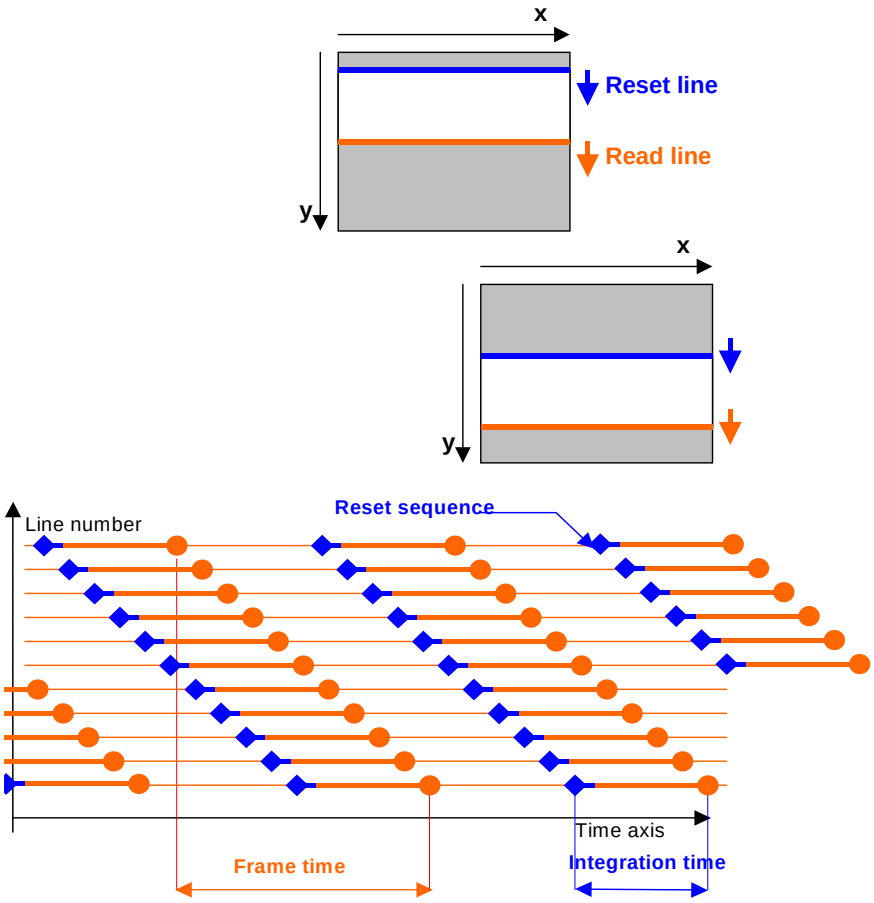

Figure 14. Synchronous Shutter Operation

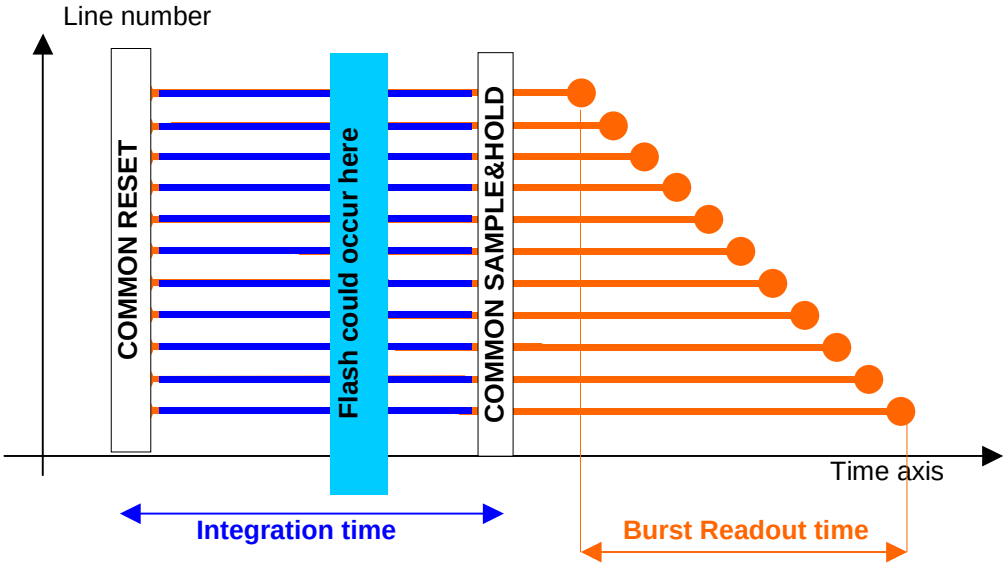

Snapshot (Synchronous) Shutter

A synchronous (global, snapshot) shutter solves the inconvenience found in the rolling shutter. Light integration takes place on all pixels in parallel, although subsequent readout is sequential.

Figure 14 shows the integration and read out sequence for the synchronous shutter. All pixels are light sensitive at the same period of time. The whole pixel core is reset simultaneously and after the integration time all pixel values are sampled together on the storage node inside each pixel. The pixel core is read out line by line after integration. Note that the integration and read out cycle is carry-out in serial, which causes that no integration is possible during read out.

During synchronous shutter the input pins SS_START and SS_STOP are used to start and stop the synchronous shutter.

Sequencer

Figure 5 on page 4 shows a number of control signals that are needed to operate the sensor in a particular sub-sampling mode with a certain integration time, output amplifier gain, etc.

Most of these signals are generated on-chip by the sequencer that uses only a few control signals. These control signals should be generated by the external system:

- SYS_CLOCK (X-clock), which defines the pixel rate
- Y_START pulse, which indicates the start of a new frame read out
- Y_CLOCK, which selects a new row and starts the row blanking sequence, including the synchronization and loading of the X-register
- SS_START and SS_STOP to control the integration period in snapshot shutter mode.

The relative position of the pulses is determined by a number of data bits that are uploaded in internal registers through the serial or parallel interface.

Internal Registers

Table 10 on page 12 shows a list of the internal registers with a short description. In the next section, the registers are explained in more detail.

IPR2025-00339 Exhibit 2008 Page 11 of 42

Table 10.Internal Registers

Register	Bit	Name	Description
0 (0000)	11:0	SEQUENCER register	Default value <11:0>: “000011000100”
	0	SHUTTER_TYPE	1 = rolling shutter 0 = synchronous shutter
	1	FRAME_CAL_MODE	0 = fast 1 = slow
	2	LINE_CAL_MODE	0 = fast 1 = slow
	3	CONT_CHARGE	1 = “Continuous” precharge enabled.
	4	GRAN_X_SEQ_LSB	Granularity of the X sequencer clock
	5	GRAN_X_SEQ_MSB	
	6	GRAN_SS_SEQ_LSB	Granularity of the SS sequencer clock
	7	GRAN_SS_SEQ_MSB	
	8	KNEEPOINT_LSB	Sets reset voltage for multiple slope operation.
	9	KNEEPOINT_MSB	
	10	KNEEPOINT_ENABLE	1 = Enables multiple slope operation in synchronous shutter mode
	11	VDDR_RIGHT_EXT	1 = Disables circuit that generates VDDR_RIGHT voltage so external voltage can be applied.
1 (0001)	11:0	NROF_PIXELS	Number of pixels to count (maximum 1280/2). Default value <11:0>: “001001111111”
2 (0010)	11:0	NROF_LINES	Number of lines to count. Default value <11:0>: “001111111111”
3 (0011)	11:0	INT_TIME	Integration time. Default value <11:0>: “111111111111”
4 (0100)	10:0	X_REG	X start position (maximum 1280/2). Default value <10:0>: “00000000000”
5 (0101)	10:0	YL_REG	Y-left start position. Default value <10:0>: “00000000000”
6 (0110)	10:0	YR_REG	Y-right start position. Default value <10:0>: “00000000000”
7 (0111)	7:0	IMAGE CORE register	Default value <7:0>: “00000000”
	0	TEST_EVEN	Test even columns.
	1	TEST_ODD	Test odd columns.
	2	X_SUBSAMPLE	Enable sub-sampling in X-direction.
	3	X_SWAP12	Swap columns 1-2, 5-6, …
	4	X_SWAP30	Swap columns 3-4, 7-8, …
	5	Y_SUBSAMPLE	Enable sub-sampling in Y-direction.
	6	Y_SWAP12	Swap rows 1-2, 5-6, …
	7	Y_SWAP30	Swap rows 3-4, 7-8, …
8 (1000)	6:0	AMPLIFIER register	Default value <6:0>: “1010000”
	0	GAIN<0>	Output amplifier gain setting.
	1	GAIN<1>	
	2	GAIN<2>	
	3	GAIN<3>	
	4	UNITY	1 = Amplifier in unity gain mode.
	5	DUAL_OUT	1 = Activates second output.
	6	STANDBY	0 = Amplifier in standby mode.

IPR2025-00339 Exhibit 2008 Page 12 of 42

Table 10.Internal Registers (continued)

Register	Bit	Name	Description
9 (1001)	6:0	DACRAW_REG	Amplifier DAC raw offset.' Default value <6:0>: “1000000”
10 (1010)	6:0	DACFINE_REG	Amplifier DAC fine offset. Default value <6:0>: “1000000”
11 (1011)	2:0	ADC register	Default value <2:0>: “011”
	0	TRISTATE_OUT	0 = Output bus in tri-state.
	1	GAMMA	0 = Gamma-correction on.
	2	BIT_INV	1 = Bit inversion on output bus.
12 (1100)		Reserved.	
13 (1101)		Reserved.	
14 (1110)		Reserved.	
15 (1111)		Reserved.	

Detailed Description of the Internal Registers

Sequencer Register (7:0)

1. Shutter Type (bit 0).

   The IBIS5-B-1300 image sensor has 2 shutter types:

   0 = synchronous shutter.

   1 = rolling shutter.

2. Output Amplifier Calibration (bits 1 and 2).

   Bits FRAME_CAL_MODE and LINE_CAL_MODE define the calibration mode of the output amplifier.

   During every row-blanking period, a calibration is done of the output amplifier. There are 2 calibration modes. The FAST mode (= 0) can force a calibration in one cycle but is not so accurate and suffers from KTC noise, while the SLOW mode (= 1) can only make incremental adjustments and is noise free.

   Approximately 200 or more “slow” calibrations have the same effect as 1 “fast” calibration.

   Different calibration modes can be set at the beginning of the frame (FRAME_CAL_MODE bit) and for every subsequent line that is read (LINE_CAL_MODE bit). The beginning of a frame is defined by the Y_START input (see lower), Y_CLOCK defines the beginning of a new row.

3. Continuous Charge (bit 3).

   For some applications it might be necessary to use continuous charging of the pixel columns instead of a pre-charge on every line sample operation.

   Setting bit CONT_CHARGE to “1” activates this function. The resistor connected to pin PC_CMD is used to control the current level on every pixel column.

4. Internal Clock Granularities (bits 4, 5, 6 and 7).

   The system clock is divided several times on-chip.

   The X-shift-register that controls the column/pixel readout, is clocked by half the system clock rate. Odd and even pixel columns are switched to 2 separate buses. In the output amplifier the pixel signals on the 2 buses are combined into one pixel stream at the same frequency as SYS_CLOCK.

   The clock, that drives the “snapshot” or synchronous shutter sequencer, can be programmed using the bits GRAN_SS_SEQ_MSB (bit 7) and GRAN_SS_SEQ_LSB (bit 6).

   This way the integration time in synchronous shutter mode can be a multiple of 32, 64, 128 or 256 times the system clock period. To overcome global reset issues it is advised that the longest SS granularity is used (bits 6 and 7 set to '1').

Table 11.SS Sequencer Clock Granularities

GRAN_SS_SEQ_MSB/ LSB	SS-sequencer Clock	Integration Time Step[2]
00	32 x SYS_CLOCK	800 ns
01	64 x SYS_CLOCK	1.6 µs
10	128 x SYS_CLOCK	3.2 µs
11	256 x SYS_CLOCK	6.4 µs

The clock that drives the X-sequencer can be a multiple of 4, 8, 16, or 32 times the system clock. Clocking the X-sequencer at a slower rate (longer row blanking time; pixel read out speed is always equal to the SYSTEM_CLOCK) can result in more signal swing for the same light conditions.

Table 12.X Sequencer Clock Granularities

GRAN_X_SEQ_MSB/ LSB	X-sequencer Clock	Row Blanking Time[2]
00	4 x SYS_CLOCK	3.5 µs
01	8 x SYS_CLOCK	7 µs
10	16 x SYS_CLOCK	14 µs
11	32 x SYS_CLOCK	28 µs

Note
2. Using a SYS_CLOCK of 40 MHz (25 ns period).

5. Pixel Reset Knee-point for Multiple Slope Operation (bits 8, 9, and 10).

   In normal (single slope) mode the pixel reset is controlled from the left side of the image core using the voltage applied on pin VDDR_LEFT as pixel reset voltage.

   In multiple slope operation one or more variable pixel reset voltages have to be applied.

   Bits KNEE_POINT_MSB and KNEE_POINT_LSB select the on chip-generated pixel reset voltage.

   Bit KNEE_POINT_ENABLE set to “1” switches control to the right side of the image core so the pixel reset voltage (VDDR_RIGHT), selected by bits KNEE_POINT_MSB/LSB, is used.

   Bit KNEE_POINT_ENABLE should only be used for multiple slope operation in synchronous shutter mode. In rolling shutter mode, only the bits KNEE_POINT_MSB/LSB must be used to select the second knee-point in dual slope operation. The actual knee-point depends on VDDH, VDDR_LEFT and VDDC applied to the sensor.

Table 13.Multiple Slope Register Settings

KNEE_POINT		Pixel reset voltage (V)VDDR_RIGHT	Knee-point (V)
MSB/LSB	ENABLE		
00	0 or 1	VDDR_LEFT	0
01	1	VDDR_LEFT – 0.76	+ 0.76
10	1	VDDR_LEFT – 1.52	+ 1.52
11	1	VDDR_LEFT – 2.28	+ 2.28

6. External Pixel Reset Voltage for Multiple Slope (bit 11)

   When bit VDDR_RIGHT_EXT is set to “1”, the circuit that generates the variable pixel reset voltage is disabled and the voltage externally applied to pin VDDR_RIGHT is used as the double/multiple slope reset voltage.

   When bit VDDR_RIGHT_EXT is set to “0” the variable pixel reset voltage (used for multiple slope operation) can be monitored on pin VDDR_RIGHT.

NROF_PIXELS Register (11:0)

After the internal x_sync is generated (start of the pixel readout of a particular row), the PIXEL_VALID signal goes high. The PIXEL_VALID signal goes low when the pixel counter reaches the value loaded in the NROF_PIXEL register. Due to the fact that 2 pixels are read at the same clock cycle this number have to be divided by 2 (NROF_PIXELS = (width of ROI / 2) – 1).

ROF_LINES Register (11:0)

After the internal yl_sync is generated (start of the frame readout with Y_START), the line counter increases with each Y_CLOCK pulse until it reaches the value loaded in the NROF_LINES register and an LAST_LINE pulse is generated.

INT_TIME Register (11:0)

The INT_TIME register is used to set the integration time of the electronic shutter. The interpretation of the INT_TIME depends on the chosen shutter type (rolling or synchronous).

1. Synchronous Shutter.

   After the SS_START pulse is applied an internal counter counts the number of SS granulated clock cycles until it reaches the value loaded in the INT_TIME register and a TIME_OUT pulse is generated. This TIME_OUT pulse can be used to generate the SS_STOP pulse to stop the integration. When the INT_TIME register is used the maximum integration time is:

   TINT_MAX = 212 * 256 (maximum granularity) * (40 MHZ) – 1 = 26.2 ms.

   This maximum time can be increased if an external counter is used to trigger SS_STOP. The minimal value that should be loaded into the INT_TIME register is 10 (see also “Internal Clock Granularities (bits 4, 5, 6 and 7).” on page 13).

2. Rolling Shutter.

   When the Y_START pulse is applied (start of the frame readout), the sequencer generates the yl_sync pulse for the left Y-shift register (read out Y-shift register). This loads the left Y-shift register with the pointer loaded in YL_REG register. At each Y_CLOCK pulse, the pointer shifts to the next row and the integration time counter increases until it reaches the value loaded in the INT_TIME register. At that moment, the yr_sync pulse for the right Y-shift register is generated which loads the right Y-shift register (reset Y-shift register) with the pointer loaded in YR_REG register (see Figure 15). The integration time counter is reset when the sync for the left Y-shift register is asserted. Both shift registers keep moving until the next sync is asserted (Y_START for the left Y-shift register and the sync for the right Y-shift register is generated when the integration time counter reaches the INT_TIME value).

   Treg_int Difference between left and right pointer = value set in the INT_TIME register (number of lines)

   The actual integration time is given by:

   Tint Integration time [# lines] = NROF_LINES register – INT_TIME register

Figure 15. Synchronization of the Shift Registers in Rolling Shutter Mode

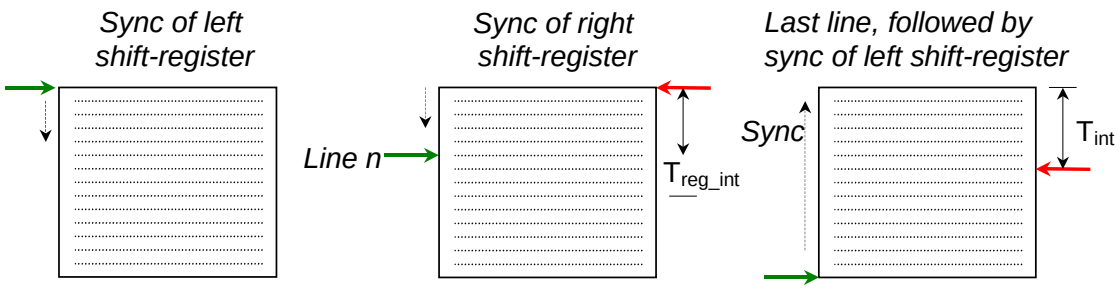

IPR2025-00339 Exhibit 2008

X_REG Register (10:0)

The X_REG register determines the start position of the window in the X-direction. In this direction, there are 640 possible starting positions (2 pixels are addressed at the same time in one clock cycle). If sub sampling is enabled only the even pixels can be set as starting position (for instance: 0, 2, 4, 6, 8… 638).

YL_REG (10:0) and YR_REG (10:0)

The YL_REG and YR_REG registers determine the start position of the window in the Y-direction. In this direction, there are 1024 possible starting positions. In rolling shutter mode the YL_REG register sets the start position of the read (left) pointer and the YR_REG sets the start position of the reset (right) pointer. For both shutter types YL_REG must always be equal to YR_REG.

Image Core Register (7:0)

Bits 1:0 of the IMAGE_CORE register define the test mode of the image core. Setting 00 is the default and normal operation mode. In case the bit is set to 1, the odd (bit 1) or even (bit 0) columns are tight to the reset level. If the internal ADC is used bits 0 and 1 can be used to create test pattern to test the sample moment of the ADC. If the ADC sample moment is not chosen correctly the created test pattern will not be black-white-black-etc. (IMAGE_CORE register set at 1 or 2) or black-black-white-white-black-black (IMAGE_CORE register set at 9) but grey shadings if the sensor is saturated.

Bits 7:2 of the IMAGE_CORE register define the sub-sampling mode in the X-direction (bits 4:2) and in the Y-direction (bits 7:5). The sub-sampling modes and corresponding bit setting are given in Table 6 (*Section*) and Table 7 (*Section*).

Amplifier Register (6:0)

1. GAIN (bits 3:0)

   The gain bits determine the gain setting of the output amplifier. They are only effective if UNITY = 0. The gains and corresponding bit setting are given in Table 8 (*Section*).
2. UNITY (bit 4)

   In case UNITY = 1, the gain setting of GAIN is bypassed and the gain amplifier is put in unity feedback.
3. DUAL_OUT (bit 5)

   If DUAL_OUT = 1, the two output amplifiers are active. If DUAL_OUT = 0, the signals from the two buses are multiplexed to output PXL_OUT1 which must be connected to ADC_IN. The gain amplifier and output driver of the second path are put in standby.
4. STANDBY

   If STANDBY = 0, the complete output amplifier is put in standby. For normal use, STANDBY must be set to 1.

DAC_RAW Register (6:0) and DAC_FINE (6:0) Register

These registers determine the black reference level at the output of the output amplifier. Bit setting 1111111 for DAC_RAW register gives the highest offset voltage, bit setting 0000000 for DAC_RAW register gives the lowest offset voltage. Ideally, if the two output paths have no offset mismatch, the DAC_FINE register must be set to 1000000. Deviation from this value can be used to compensate the internal mismatch (see “Output Amplifier” on page 7).

ADC Register (2:0)

1. TRISTATE_OUT (bit 0)

   In case TRISTATE = 0, the ADC_D<9:0> outputs are in tri-state mode. TRISTATE = 1 for normal operation mode.
2. GAMMA (bit 1)

   If GAMMA is set to 1, the ADC input to output conversion is linear; otherwise the conversion follows a 'gamma' law (more contrast in dark parts of the window, lower contrast in the bright parts).
3. BIT_INV (bit 2)

   If BIT_INV = 1, 0000000000 is the conversion of the lowest possible input voltage, otherwise the bits are inverted.

Data Interfaces

Two different data interfaces are implemented. They can be selected using pins IF_MODE (pin 12) and SER_MODE (pin 6).

Table 14.Serial and Parallel Interface Selection

IF_MODE	SER_MODE	Selected interface
1	X	Parallel
0	1	Serial 3 Wire
0	0	Serial 2 Wire.

Parallel Interface

The parallel interface uses a 16-bit parallel input (P_DATA <15:0>) to upload new register values. Asserting P_WRITE loads the parallel data into the internal register of the IBIS5-B-1300 where it is decoded. (See Figure 16. P_DATA (15:12) Address bits REG_ADDR (3:0); P_DATA (11:0) Data bits REG_DATA (11:0)).

Figure 16. Parallel Interface Timing

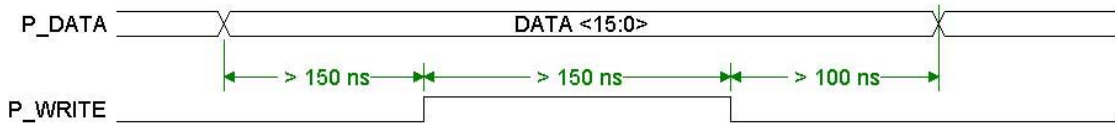

IPR2025-00339 Exhibit 2008 Page 15 of 42

Figure 17. Serial-3-wire Interface Timing

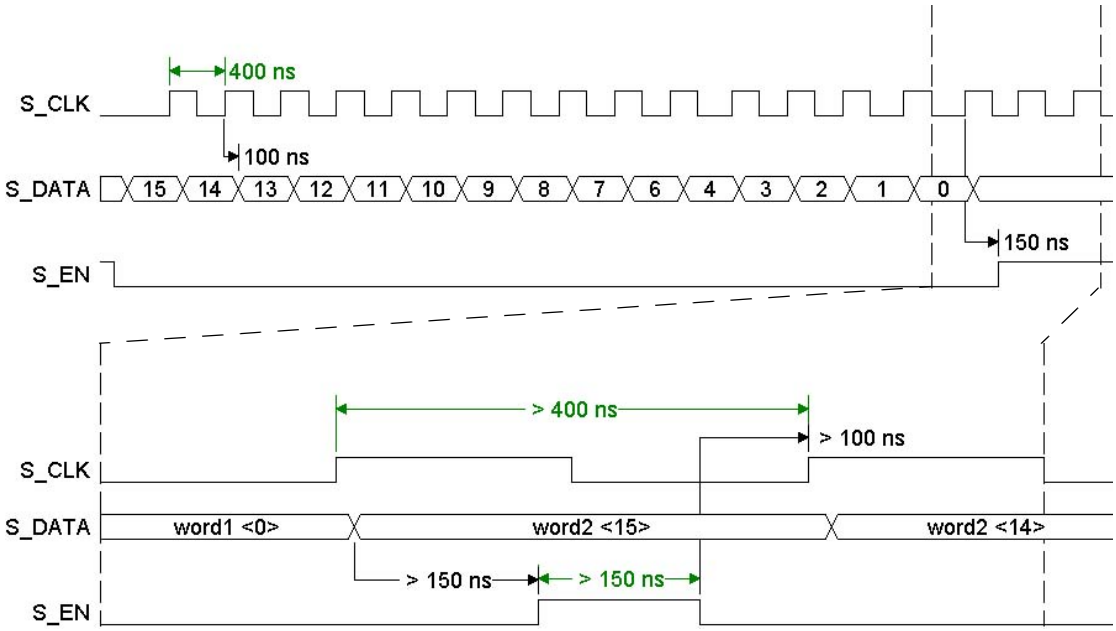

Serial-3-wire Interface

The serial-3-wire interface (or Serial-to-Parallel Interface) uses a serial input to shift the data in the register buffer. When the complete data word is shifted into the register buffer the data word is loaded into the internal register where it is decoded. (See Figure 17. S_DATA (15:12) Address bits REG_ADDR (3:0); S_DATA (11:0) Data bits REG_DATA (11:0). When S_EN is asserted the parallel data is loaded into the internal registers of the IBIS5-A-1300. The maximum tested frequency of S_DATA is 2.5 MHz.)

Serial-2-wire Interface

The serial-2-wire interface is a unidirectional interface (only register value can be written to the sensor; nothing can be read out). Therefore, the R/W_N bit (bit 8) is ignored internally. An acknowledge pulse is asserted each time a data word is received successfully. The maximum tested frequency of S_DATA is 2.5 MHz. (See Figure 18. S_DATA (15:12) Address bits REG_ADDR (3:0); S_DATA (11:0) Data bits REG_DATA (11:0)).

Figure 18. Serial-2-wire Interface Timing

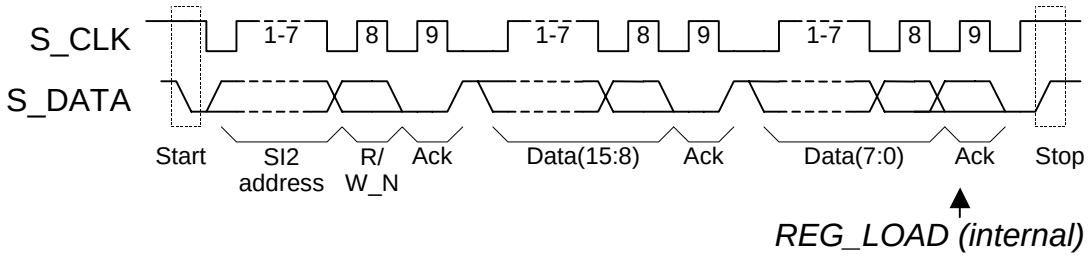

IPR2025-00339
Exhibit 2008

Timing Diagrams

Timing Requirements

There are 6 control signals that operate the image sensor:

- SS_START
- SS_STOP
- Y_CLOCK
- Y_START
- X_LOAD
- SYS_CLOCK

These control signals must be generated by the external system with following time constraints to SYS_CLOCK (rising edge = active edge):

T_{SETUP} >7.5 ns

T_{HOLD} > 7.5 ns

It is important that these signals are free of any glitches.

Figure 19 shows a recommended schematic for generating the basic signals and to avoid any timing problems.

Figure 19. Recommended Schematic for Generating Basic Signals

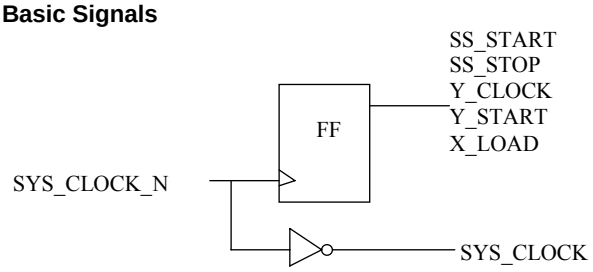

Synchronous Shutter: Single Slope Integration

SS_START and SS_STOP must change on the falling edge of the SYS_CLOCK (Tsetup and Thold > 7.5 ns). The pulse width of both signals must be a minimum of 1 SYS_CLOCK cycle. As long as SS_START or SS_STOP are asserted, the sequencer stays in a suspended state. (See Figure 21.)

T_1—Time counted by the integration timer until the value of INT_TIME register is reached. The integration timer is clocked by the granulated SS-sequencer clock.

T_2—TIME_OUT signal stays high for 1 granulated SS-sequencer clock period.

T_3—There are no constraints for this time. The user can use the TIME_OUT signal to trigger the SS_STOP pin (or use an external counter to trigger SS_STOP); both signals cannot be tied together.

T_4—During this time, the SS-sequencer applies the control signals to reset the image core and start integration. This takes 4 granulated SS-sequencer clock periods. The integration time counter starts counting at the first rising edge after the falling edge of SS_START.

T_5—The SS-sequencer puts the image core in a readable state. It takes 2 granulated SS-sequencer clock periods.

T_{int}—The “real” integration or exposure time.

Figure 20. Relative Timing of the 5 Sequencer Control Signal

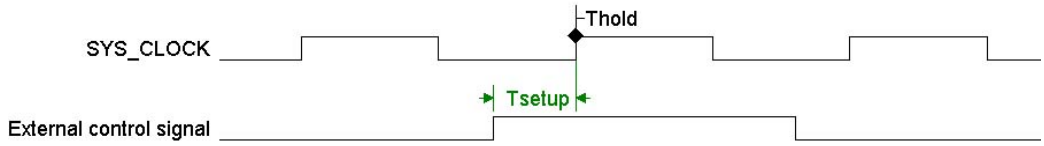

Figure 21. Synchronous Shutter: Single Slope Integration

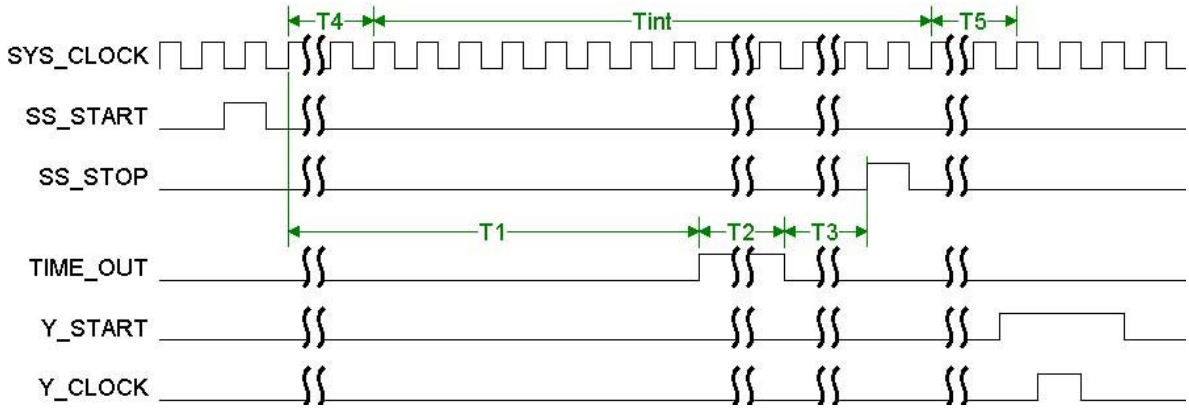

IPR2025-00339 Exhibit 2008 Page 17 of 42

Figure 22. Synchronous Shutter: Pixel Read Out

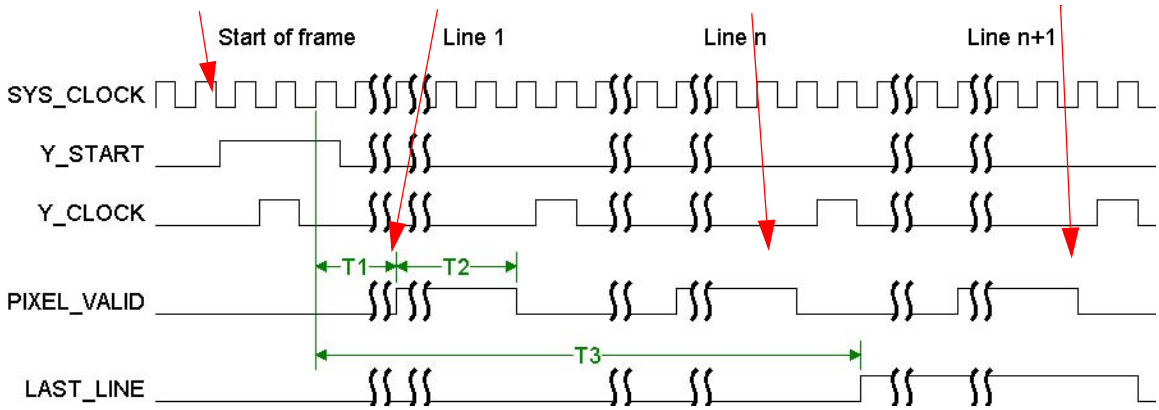

Synchronous Shutter: Pixel Readout

Basic Operation

Y_START and Y_CLOCK must change on the falling edge of the SYS_CLOCK (Tsetup and Thold > 7.5 ns). The pulse width must be a minimum of 1 clock cycle for Y_CLOCK and 3 clock cycles for Y_START. As long as Y_CLOCK is applied, the sequencer stays in a suspended state. (See Figure 22.)

T_1—Row blanking time: During this period, the X-sequencer generates the control signals to sample the pixel signal and pixel reset levels (double sampling fpn-correction), and starts the readout of one line. The row blanking time depends on the granularity of the X-sequencer clock (see Table 15).

Table 15.Row Blanking Time as Function of X-sequencer Granularity

Granularity N_{GRAN}	T_1(µs) = 35 x N_{GRAN} x T_{SYS_CLOCK}	GRAN_X_SEQ MSB/LSB
x 4	140 x T_{SYS_CLOCK} = 3.5	00
x 8	280 x T_{SYS_CLOCK} = 7.0	01
x 16	560 x T_{SYS_CLOCK} = 14.0	10
x 32	1120 x T_{SYS_CLOCK} = 28.0	11

T_2—Pixels counted by pixel counter until the value of NROF_PIXELS register is reached. PIXEL_VALID goes high when the internal X_SYNC signal is generated, in other words when the readout of the pixels is started. PIXEL_VALID goes low when the pixel counter reaches the value loaded in the NROF_PIXELS register (after a complete row read out).

T_3—LAST_LINE goes high when the line counter reaches the value loaded in the NROF_LINES register and stays high for 1 line period (until the next falling edge of Y-CLOCK).

On Y_START the left Y-shift-register of the image core is loaded with the YL-pointer that is loaded in to register YL_REG.

Pixel Output

The pixel signal at the PXL_OUT1 output becomes valid after five SYS_CLOCK cycles when the internal X_SYNC (= start of PIXEL_VALID output or external X_LOAD pulse) pulse is asserted. (See Figure 23.)

T_1—Row blanking time (see Table 15).

T_2—5 SYS_CLOCK cycles.

T_3—Time for new X-pointer position upload in X_REG register (see "Windowing in X-direction" on page 20 for more details).

Figure 23. Pixel Output

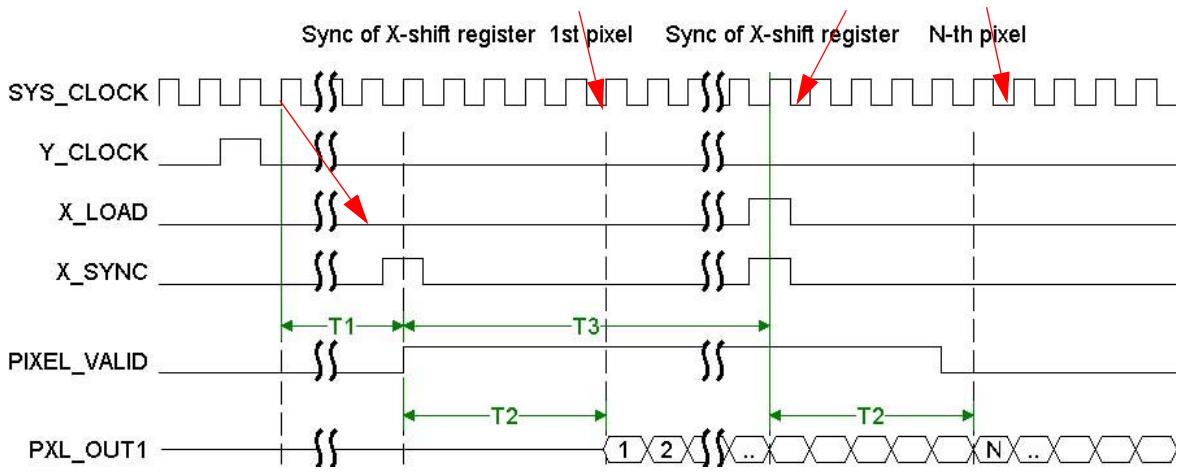

IPR2025-00339
Exhibit 2008
Page 18 of 42

Synchronous Shutter: Multiple Slope Integration

Figure 24. Multiple Slope Integration

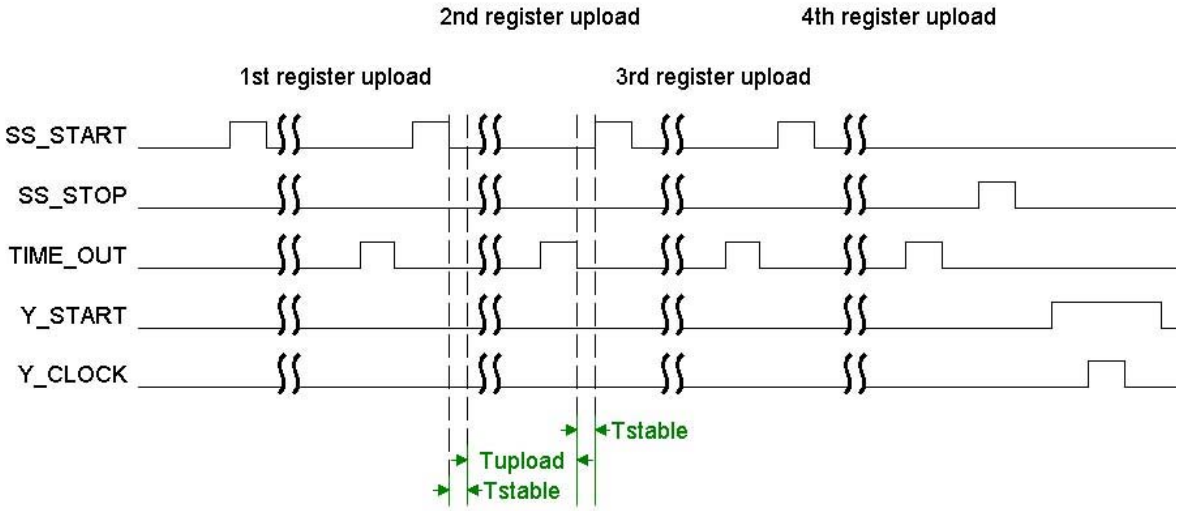

Up to four different pixel reset voltages can be used during multiple slope operation in synchronous shutter mode. This is done by uploading new values to register bits KNEEPOINT_MSB/LSB/ENABLE before a new SS_START pulse is applied.

Bit KNEEPOINT_ENABLE must be set high to do a pixel reset with a lower voltage.

Bits KNEEPOINT_MSB/LSB/ENABLE must be set back to “0” before the SS_STOP pulse is applied. Every time an SS_START pulse is applied, the integration time counter is reset.

Table 16.Multiple Slope Register Settings

	KNEEPOINT	
	MSB/LSB	ENABLE
Initial set-up	00	0
1st register upload	01	1
2nd register upload	10	1
3th register upload	11	1
4th register upload	00	0

The register upload must be uploaded after time T_{stable}, otherwise, the change affects the SS-sequencer resulting in a bad pixel reset. T_{stable} depends on the granularity of the SS-sequencer clock (see Table 17).

Table 17.T_{stable} for Different Granularity Settings

Granularity N_{GRAN}	T_{stable} (µs) $= 5 \times N_{GRAN} \times T_{SYS_CLOCK}$	GRAN_SS_SEQ MSB/LSB
x 32	$160 \times T_{SYS_CLOCK} = 4$	00
x 64	$320 \times T_{SYS_CLOCK} = 8$	01
x 128	$640 \times T_{SYS_CLOCK} = 16$	10
x 256	$1280 \times T_{SYS_CLOCK} = 32$	11

T_{upload} depends on the interface mode used to upload the registers.

Table 18.T_{upload} for Different Interface Modes

Interface mode	T_{upload} (µs)
Parallel	1
Serial 3-Wire	8

IPR2025-00339 Exhibit 2008 Page 19 of 42

Rolling Shutter Operation

Figure 25. Rolling Shutter Operation

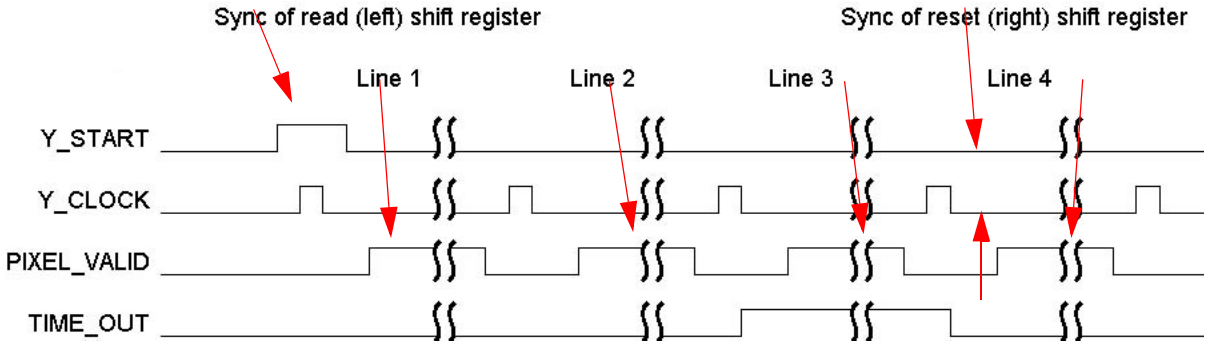

The integration of the light in the image sensor is done during readout of the other lines.

The only difference with synchronous shutter is that the TIME_OUT pin is used to indicate when the Y_SYNC pulse for the right Y-shift-register (reset Y-shift register) is generated. This loads the right Y-shift-register with the pointer loaded in register YR_REG. The Y_SYNC pulse for the left Y-shift register (read Y-shift register) is generated with Y_START.

The INT_TIME register defines how many lines have to be counted before the Y_SYNC of the right Y-shift-register is generated, hence defining the integration time. See also "INT_TIME Register (11:0)" on page 14 for a detailed description of the rolling shutter operation.

T_{int} Integration time [# lines] = register(NROF_LINES) – register(INT_TIME)

Note For normal operation the values of the YL_REG and YR_REG registers are equal.

Windowing in X-direction

An X_LOAD pulse overrides the internal X_SYNC signal, loading a new X-pointer (stored in the X_REG register) into the X-shift-register.

The X_LOAD pulse has to appear on the falling edge of SYS_CLOCK and has to remain 2 SYS_CLOCK cycles high overlapping 2 rising edges of SYS_CLOCK. On one of the 2 rising edges of SYS_CLOCK the new X-pointer is loaded.

T_{load} is the available time to upload the register and is defined from the previous register load to the rising edge of X_LOAD. It depends on the settling time of the register and the X-decoder.

The actual time to load the register itself depends on the interface mode that is used.

The parallel interface is the fastest.

Table 19.T_{load} for Different Interfaces

Interface mode	T_{load} (µs)	
Parallel interface	1	(about 40 SYS_CLOCK cycles)
Serial 3 Wire	16	(at 2.5 MHz data rate)

Figure 26. Windowing in the X-direction

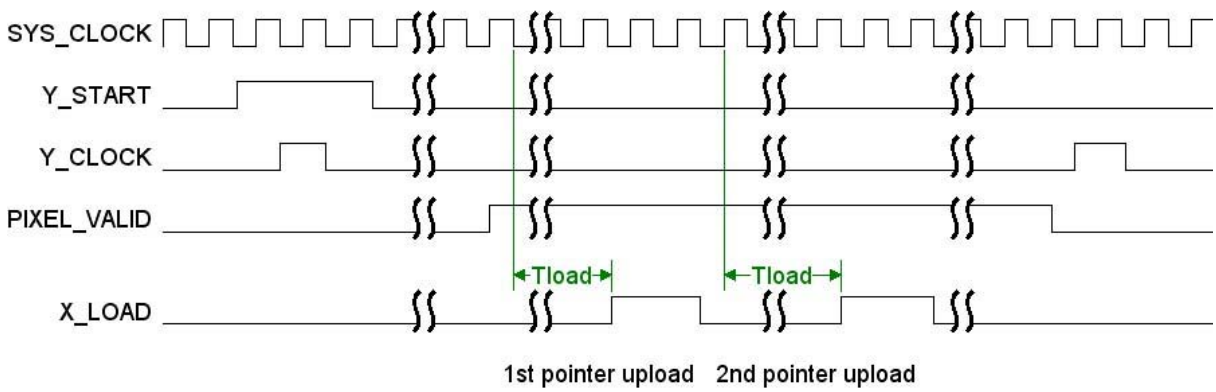

IPR2025-00339 Exhibit 2008 Page 20 of 42

Windowing in Y-direction

Figure 27. Windowing in the Y-direction

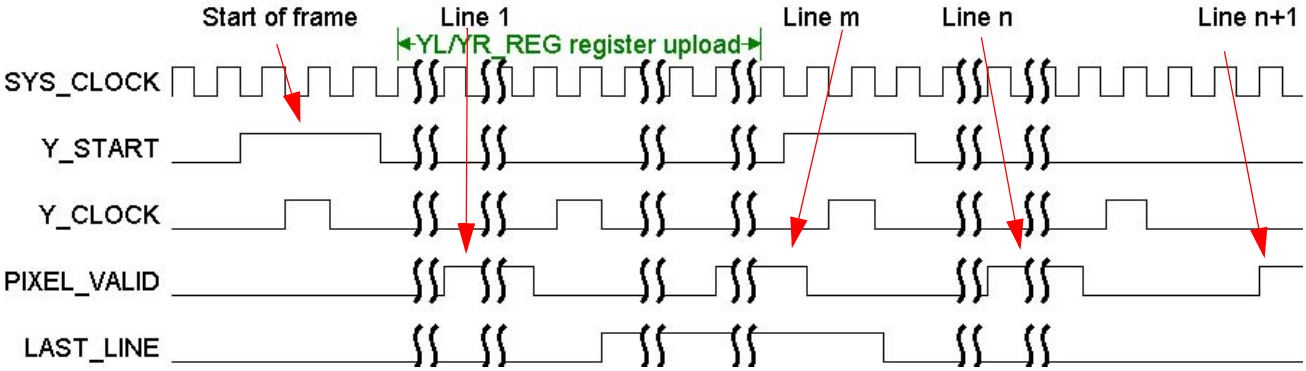

A new Y-pointer can be loaded into the Y-shift-register, by reapplying the Y_START pulse after loading a new Y-pointer value into the YL_REG and YR_REG registers.

Every time a Y_START pulse appears, a frame calibration of the output amplifier is performed.

Initialization (start-up behavior)

To avoid any high current consumption at start-up, it is recommended to apply the SYS_CLOCK signal as soon as possible after or even before power-on of the image sensor.

After power-on of the image sensor, it is recommended to apply SYS_RESET for a minimum of 5 SYS_CLOCK periods to ensure a proper reset of the on-chip sequencer and timing circuitry. All internal registers will be set to ‘0’ after SYS_RESET is applied.

Since all the IBIS5-B-1300 control signals are active high, it is also recommended to apply a low level (before SYS_RESET occurs) to these pins at start up to avoid latch up.

IPR2025-00339 Exhibit 2008 Page 21 of 42

Pin List

The IBIS5-B-1300 image sensor is packaged in a leadless ceramic carrier (LCC package). Table 20 is a list of all the pins and their functions. In total, there are 84 pins.

Table 20.Pin List[3, 4, 5]

Pin	Pin Name	Pin Type	Pin Description
1	P_DATA<8>	Input	Digital input. Data parallel interface.
2	P_WR	Input	Digital input (active high). Parallel write.
3	S_CLK	Input	Digital input. Clock signal of serial interface.
4	S_DATA	Input	Digital input/output. Data of serial interface.
5	S_EN	Input	Digital input (active low). Enable of Serial-3-wire interface.
6	SER_MODE	Input	Digital input. Serial mode enable (1 = Enable serial-3-wire, 0 = Enable serial-2-wire).
7	VDDC	Supply	Analog supply voltage. Supply voltage of the pixel core [3.3V].
8	VDDA	Supply	Analog supply voltage. Analog supply voltage of the image sensor [3.3V].
9	GNDA	Ground	Analog ground. Analog ground of the image sensor.
10	GNDD	Ground	Digital ground. Digital ground of the image sensor.
11	VDDD	Supply	Digital supply voltage. Digital supply voltage of the image sensor [3.3V].
12	IF_MODE	Input	Digital input. Interface mode (1 = parallel; 0 = serial).
13	DEC_CMD	Input	Analog input. Biasing of decoder stage. Connect to VDDA with R = 50 kΩ and decouple with C = 100 nF to GNDA.
14	Y_START	Input	Digital input (active high). Start frame read out.
15	Y_CLOCK	Input	Digital input (active high). Line clock.
16	LAST_LINE	Output	Digital output. Generates a high level when the last line is read out.
17	X_LOAD	Input	Digital input (active high). Loads new X-position during read out.
18	SYS_CLOCK	Input	Digital input. System (pixel) clock (40 MHz).
19	PXL_VALID	Output	Digital output. Generates high level during pixel read out.
20	SS_START	Input	Digital input (active high). Start synchronous shutter operation.
21	SS_STOP	Input	Digital input (active high). Stop synchronous shutter operation.
22	TIME_OUT	Output	Digital output. Synchronous shutter: pulse when time-out reached. Can be used to trigger SS_STOP although both signals can't be tied together. Rolling shutter: pulse when second Y-sync appears.
23	SYS_RESET	Input	Digital input (active high). Global system reset.
24	EL_BLACK	Input	Digital input (active high). Enables electrical black in output amplifier.
25	EOSX	Output	Digital output. Diagnostic end-of-scan of X-register.
26	DAC_VHIGH	Input	Analog reference input. Biasing of DAC for output dark level. Can be used to set output range of DAC. Default: Connect to VDDA with R = 0Ω.
27	DAC_VLOW	Input	Analog reference input. Biasing of DAC for output dark level. Can be used to set output range of DAC. Default: Connect to GND A with R = 0Ω.
28	PXL_OUT1	Output	Analog output. Analog pixel output 1.
29	PXL_OUT2	Output	Analog output. Analog pixel output 2. Leave not connected if not used.
30	AMP_CMD	Input	Analog input. Biasing of the output amplifier. Connect to VDDA with R = 50 kΩ and decouple with C = 100 nF to GNDA.

Notes
3. All pins with the same name can be connected together.
4. All digital input are active high (unless mentioned otherwise).
5. Digital inputs that are not used must be tied to GND (inactive level).

IPR2025-00339 Exhibit 2008 Page 22 of 42

Table 20.Pin List[3, 4, 5] (continued)

Pin	Pin Name	Pin Type	Pin Description
31	COL_CMD	Input	Analog input. Biasing of the column amplifiers. Connect to VDDA with R = 50 kΩ and decouple with C = 100 nF to GNDA.
32	PC_CMD	Input	Analog input. Pre-charge bias. Connect to VDDA with R = 25 kΩ and decouple with C = 100 nF to GNDA.
33	VDDD	Supply	Digital supply. Digital supply voltage of the image sensor [3.3V].
34	GNDD	Ground	Digital ground. Digital ground of the image sensor.
35	GNDA	Ground	Analog ground. Analog ground of the image sensor.
36	VDDA	Supply	Analog supply voltage. Analog supply voltage of the image sensor [3.3V].
37	VDDC	Supply	Analog supply voltage. Supply voltage of the pixel core [3.3V].
38	P_DATA<0>	Input	Digital input. Data parallel interface (LSB).
39	P_DATA<1>	Input	Digital input. Data parallel interface.
40	P_DATA<2>	Input	Digital input. Data parallel interface.
41	P_DATA<3>	Input	Digital input. Data parallel interface.
42	P_DATA<4>	Input	Digital input. Data parallel interface.
43	P_DATA<5>	Input	Digital input. Data parallel interface.
44	P_DATA<6>	Input	Digital input. Data parallel interface.
45	P_DATA<7>	Input	Digital input. Data parallel interface.
46	SI2_ADDR<0>	Input	Digital input. Sets I2C address.
47	SI2_ADDR<1>	Input	Digital input. Sets I2C address.
48	SI2_ADDR<2>	Input	Digital input. Sets I2C address.
49	SI2_ADDR<3>	Input	Digital input. Sets I2C address.
50	SI2_ADDR<4>	Input	Digital input. Sets I2C address.
51	GNDAB	Supply	Analog supply voltage. Anti-blooming ground.
52	VDDR_RIGHT	Supply	Analog supply voltage. Variable reset voltage (multiple slope operation). Decouple with 1 μF to GNDA.
53	ADC_VLOW	Input	Analog reference input. ADC low reference voltage.Default: Connect to GNDA with R = 1200Ω and decouple with C = 100 nF to GNDA.
54	ADC_GNDA	Ground	Analog ground. ADC analog ground.
55	ADC_VDDA	Supply	Analog supply voltage. ADC analog supply voltage [3.3V].
56	ADC_GNDD	Ground	Digital ground. ADC digital ground.
57	ADC_VDDD	Supply	Digital supply voltage. ADC digital supply voltage [3.3V].
58	ADC_CLOCK	Input	Digital input. ADC clock (40 MHz).
59	ADC_OUT<9>	Output	Digital output. ADC data output (MSB).
60	ADC_OUT<8>	Output	Digital output. ADC data output.
61	ADC_OUT<7>	Output	Digital output. ADC data output.
62	ADC_OUT<6>	Output	Digital output. ADC data output.
63	ADC_OUT<5>	Output	Digital output. ADC data output.
64	ADC_OUT<4>	Output	Digital output. ADC data output.
65	ADC_OUT<3>	Output	Digital output. ADC data output.
66	ADC_OUT<2>	Output	Digital output. ADC data output.
67	ADC_OUT<1>	Output	Digital output. ADC data output.
68	ADC_OUT<0>	Output	Digital output. ADC data output (LSB).
69	ADC_IN	Input	Analog input. ADC analog input.
70	ADC_CMD	Input	Analog input. Biasing of the input stage of the ADC. Connect to ADC_VDDA with R = 50 kΩ and decouple with C = 100 nF to ADC_GNDA.

IPR2025-00339 Exhibit 2008 Page 23 of 42

Table 20.Pin List[3, 4, 5] (continued)

Pin	Pin Name	Pin Type	Pin Description
71	ADC_VDDD	Supply	Digital supply voltage. ADC digital supply voltage [3.3V].
72	ADC_GNDA	Ground	Analog ground. ADC analog ground.
73	ADC_GNDD	Ground	Digital ground. ADC digital ground.
74	ADC_VDDA	Supply	Analog supply voltage. ADC analog supply voltage [3.3V].
75	ADC_VHIGH	Input	Analog reference input. ADC high reference volt age.Default: Connect to VDDA with R = 360Ω and decouple with C = 100 nF to GNDA.
76	VDDR_LEFT	Supply	Analog supply voltage. High reset level [4.5V].
77	VDDH	Supply	Analog supply voltage. High supply voltage for HOLD switches in the image core [4.5V]
78	P_DATA<15>	Input	Digital input. Data parallel interface (MSB).
79	P_DATA<14>	Input	Digital input. Data parallel interface.
80	P_DATA<13>	Input	Digital input. Data parallel interface.
81	P_DATA<12>	Input	Digital input. Data parallel interface.
82	P_DATA<11>	Input	Digital input. Data parallel interface.
83	P_DATA<10>	Input	Digital input. Data parallel interface.
84	P_DATA<9>	Input	Digital input. Data parallel interface.

IPR2025-00339 Exhibit 2008 Page 24 of 42

Specifications

General Specifications.

Table 21.General Specifications

Parameter	Specification	Remarks
Pixel architecture	4T-pixel	High fill factor square pixels (based on the high-fill factor active pixel sensor technology of Cypress). Patents pending.
Pixel size	6.7 µm x 6.7 µm	The resolution and pixel size results in a 2/3" optical format.
Resolution	1280 x 1024	
Pixel rate	40 MHz	Using a 40 MHz system clock.
Shutter type	• Electronic rolling shutter • Snapshot shutter	• Continuous imaging. • Triggered global shutter with integration and readout separate in time.
Full frame rate	27 frames/second	Increases with ROI read out and/or sub sampling.

Electro-optical Specifications

Overview

Table 22.Electro-Optical Specifications

Parameter	Specification	Remarks
FPN (local)	<0.20%	RMS % of saturation signal.
PRNU (local)	<10%	Peak-to-peak of signal level.
Conversion gain	17.6 µV/electron	@ output (measured).
Output signal amplitude	1V	At nominal conditions.
Saturation charge	62.500 e-	
Sensitivity (peak)	715V.m2/W.s 8.40 V/lux.s	@ 650 nm (85 lux = 1 W/m2).
Sensitivity (visible)	572 V.m2/W.s 3.51 V/lux.s	400-700 nm (163 lux = 1 W/m2).
Peak QE * FF Peak Spectral Resp.	30%0.16 A/W	Average QE*FF = 22% (visible range). Average SR*FF = 0.1 A/W (visible range). See spectral response curve.
Fill factor	40%	Light sensitive part of pixel (measured).
Dark current	7.22 mV/s 410e-/s	Typical value of average dark current of the whole pixel array (@ 21 °C).
Dark Signal Non Uniformity	7 mV/s 400 e-/s	Dark current RMS value (@ 21 °C).
Temporal noise	40 RMS e-	Measured at digital output (in the dark).
S/N Ratio	1563:1 (64 dB)	Measured at digital output (in the dark).
Spectral sensitivity range	400 - 1000 nm	
Optical cross talk	16%	To the first neighboring pixel.
Parasitic Sensitivity	3%	Averaged over spectrum
Power dissipation	175 mWatt	Typical (including ADCs).

IPR2025-00339 Exhibit 2008 Page 25 of 42

Spectral Response Curve

Figure 28. Spectral response curve

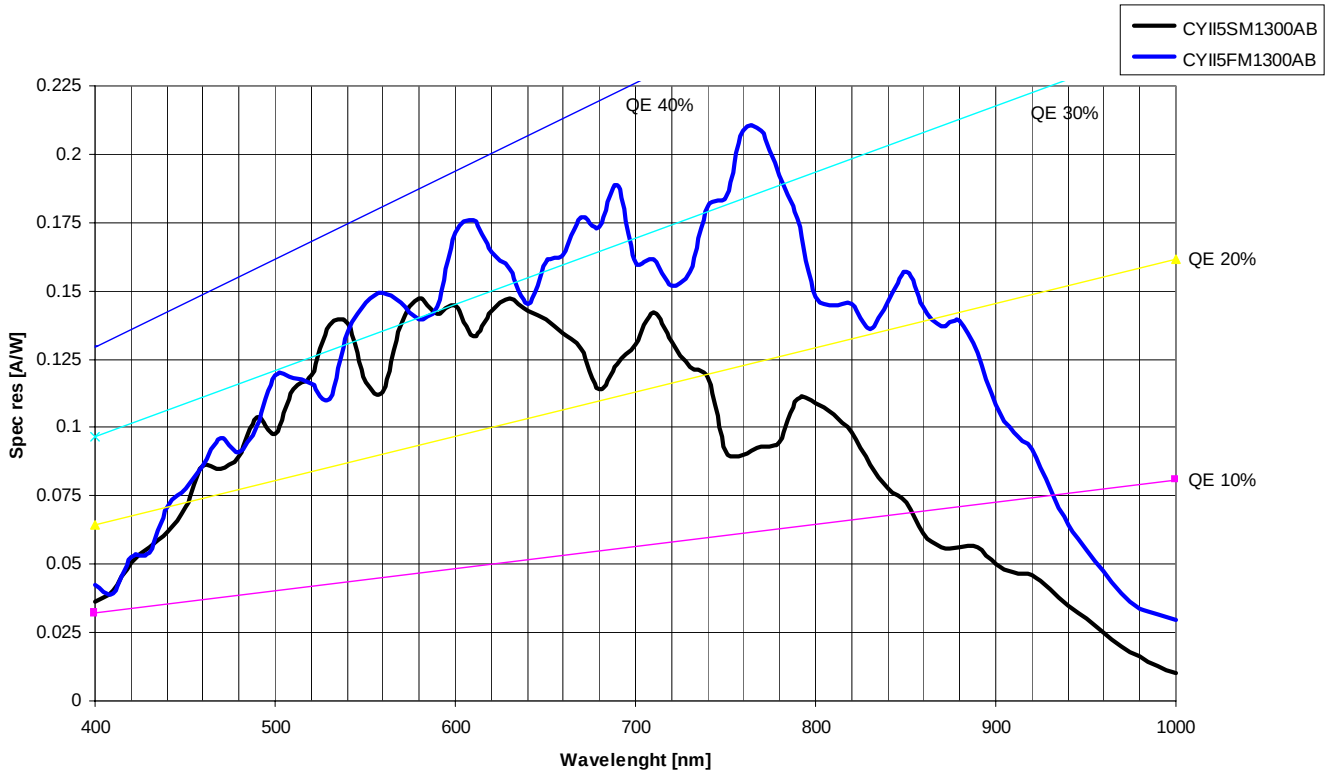

Figure 28 shows the spectral response characteristic for the IBIS5-B-1300 (CYII5SM1300AB) and the IBIS-5-BE-1300 (CYII5FM1300AB). The curve is measured directly on the pixels. It includes effects of non-sensitive areas in the pixel, e.g., interconnection lines. The sensor is light-sensitive between 400 and 1000 nm. The peak QE * FF is 30% approximately around 650 nm. In view of a fill factor of 40%, the QE is thus close to 75% between 500 and 700 nm. The IBIS5-BE-1300 has superior response in the NIR region (700-900 nm). For more information about the IBIS5-B-1300, refer to "IBIS5-BE-1300 (CYII5FM1300AB)" on page 27.

IPR2025-00339 Exhibit 2008 Page 26 of 42

Electro-voltaic Response Curve

Figure 29. Electro-voltaic Response Curve

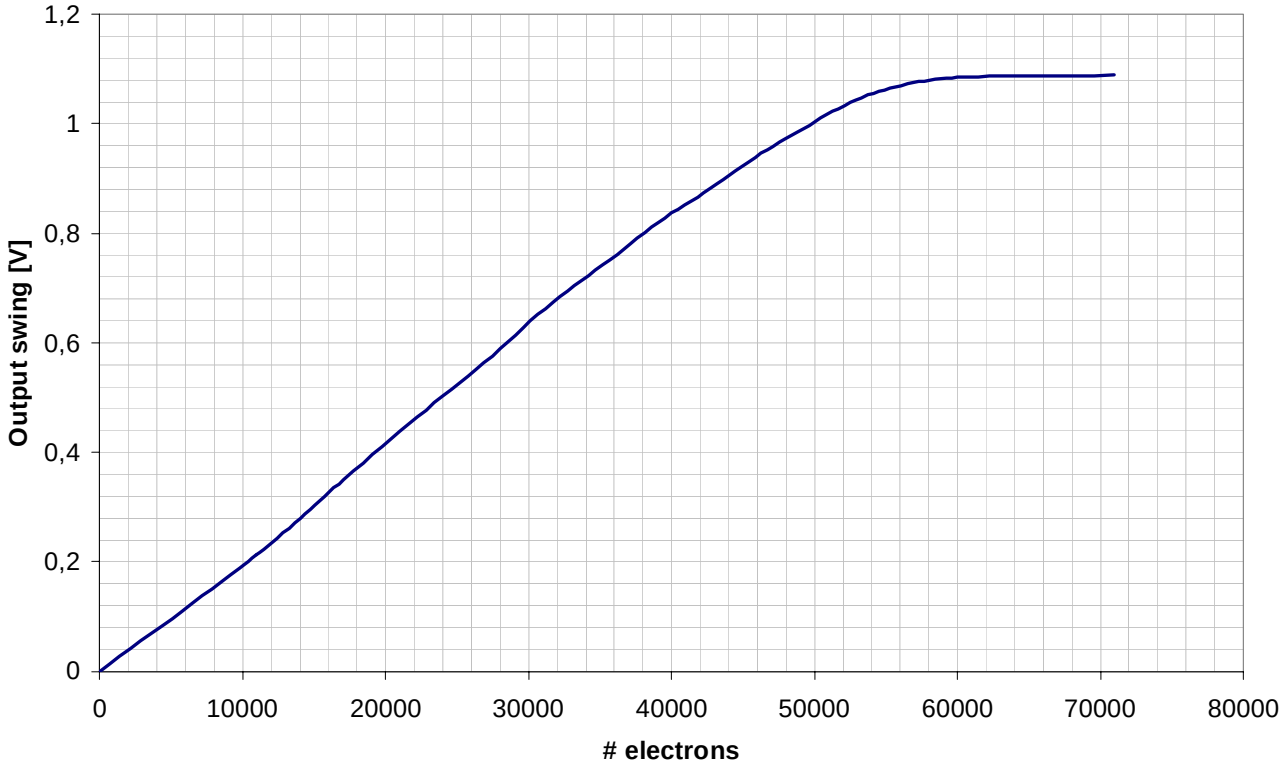

Figure 29 shows the pixel response curve in linear response mode. This curve is the relation between the electrons detected in the pixel and the output signal. The resulting voltage-electron curve is independent of any parameters (integration time, etc.). The voltage to electrons conversion gain is 17.6 µV/electron.

IBIS5-BE-1300 (CYII5FM1300AB)

The IBIS5-BE-1300 is processed on a thicker epitaxial Si layer featuring a superb sensitivity in the NIR (Near Infra Red) wavelengths (700-900 nm). The spectral response curves of the two IBIS5-B-1300 image sensors are shown in Figure 28 on page 26. As many machine vision applications use light sources in the NIR, the IBIS5-BE-1300 sensor has a significant sensitivity advantage in the NIR.

A drawback of the thicker epitaxial layer is a slight performance decrease in MTF (Modular Transfer Function or electrical pixel to pixel cross-talk) as indicated in the table below.

Table 23.MTF comparison

Direction	Wavelength	IBIS5-B-1300	IBIS5-BE-1300
Horizontal	600	0.58	0.37
Horizontal	700		0.18
Horizontal	800		0.16
Horizontal	900		0.07
Vertical	600	0.53	0.26
Vertical	700		0.16
Vertical	800		0.13
Vertical	900		0.11

The resulting image sharpness is hardly affected by this decreased MTF value.

Both IBIS5-B-1300 versions are fully pin compatible and have identical timing and biasing

Features and General Specifications

Table 24.Features and General Specifications

Feature	Specification/Description
Electronic shutter types	1. Rolling curtain shutter. 2. Synchronous (snapshot) shutter.
Windowing (ROI)	Implemented as scanning of lines/columns from an uploaded position.
Sub-sampling modes:	1:2 sub-sampling. Sub-sampling patterns: XXOOXXOO (for Bayer pattern color filter) OOXXOOXX (for Bayer pattern color filter) XOXOXOXOOXOXOXOX Identical sub-sample patterns in X- and Y-direction.
Extended dynamic range	In rolling shutter: Normal (1) or double (2) slope. In Synchronous shutter: 1, 2, 3 or 4 slopes.
Digital output	10 bit ADC @ 40 MSamples/s.
Programmable gain range	x1 to x12, in 16 steps of approx. 1.5 dB using 4-bit programming.
Programmable offset	128 steps (7 bit).
Supply voltage VDD	Image core supply: Range from 3.0V to 4.5V Analog supply: Nominal 3.3V Digital: Nominal 3.3V
Logic levels	3.3 V (Digital supply).
Operational temperature range	–30°C to 65°C, with degradation of dark current.
Die size (with scribe lines)	10.1 mm by 9.3 mm (x by y).
Package	84 pins LCC.

Electrical Specifications

Absolute Maximum Ratings

Table 25.Absolute Maximum Ratings

Parameter	Description	Value	Unit
VDD	DC supply voltage	–0.5 to 4.5	V
V_{IN}	DC input voltage	–0.5 to 3.8	V
V_{OUT}	DC output voltage	–0.5 to 3.8	V
I_{IO}	DC current drain per pin; any single input or output.	± 50	mA
T_L	Lead temperature (5 seconds soldering).	350	°C
T_{ST}	Storage temperature	–30 to +85	°C
H	Humidity (relative)	85% at 85°C	
ESD	ESD susceptibility	2000	V

VDD = VDDD = VDDA (VDDD is supply to digital circuit, VDDA to analog circuit).

Stresses beyond those listed under “Absolute Maximum Ratings” may cause permanent damage to the device. These are stress ratings only and functional operation of the device at these or any other conditions beyond those indicated in the operational sections are not implied. Exposure to absolute maximum rating conditions for extended periods may affect device reliability.

IPR2025-00339 Exhibit 2008 Page 28 of 42

Recommended Operating Conditions

Table 26.Recommended Operating Conditions

Parameter	Description	Min.	Typ.	Max.	Unit
VDDH	Voltage on HOLD switches.	+3.3	+4.5	+4.5	V
VDDR_LEFT	Highest reset voltage.	+3.3	+4.5	+4.5	V
VDDC	Pixel core voltage.	+2.5	+3.0	+3.3	V
VDDA	Analog supply voltage of the image core.	+3.0	+3.3	+3.6	V
VDDD	Digital supply voltage of the image core.	+3.0	+3.3	+3.6	V
GNDA	Analog ground	–0.5	0	+0.5	V
GNDD	Digital ground	–0.5	0	+0.5	V
GND_AB	Anti-blooming ground.	–0.5	0	+0.5	V
T_A	Commercial operating temperature.	0	30	60	°C

All parameters are characterized for DC conditions after thermal equilibrium has been established.

Unused inputs must always be tied to an appropriate logic level, e.g., either VDD or GND.

This device contains circuitry to protect the inputs against damage due to high static voltages or electric fields; however, it is recommended that normal precautions be taken to avoid application of any voltages higher than the maximum rated voltages to this high impedance circuit.

DC Electrical Characteristics

Table 27.DC Electrical Characteristics

Parameter	Characteristic	Condition	Min.	Max.	Unit
V_{IH}	Input high voltage		2.1		V
V_{IL}	Input low voltage			0.6	V
I_{IN}	Input leakage current	V_{IN} = VDD or GND	–10	+10	µA
V_{OH}	Output high voltage	VDD = min; I_{OH} = –100 mA	2.2		V
V_{OL}	Output low voltage	VDD = min; I_{OH} = 100 mA		0.5	V
I_{DD}	Maximum operating current	System clock <= 40 MHz	40	60	mA

IPR2025-00339 Exhibit 2008 Page 29 of 42

Pad position and Packaging

Bare Die

The IBIS5-B-1300 image sensor has 84 pins, 21 pins on every edge. The die size from pad-edge to pad-edge (without scribe-line) is: 10156.5 µm (x) by 9297.25 µm (y). Scribe lines take about 100 to 150 µm extra on each side. Pin 1 is located in the middle of the left side, indicated by a “1” on the layout. A logo and some identification tags can be found on the top right of the die.

Figure 30. IBIS5-B-1300 Bare Die Dimensions (All dimensions in µm)

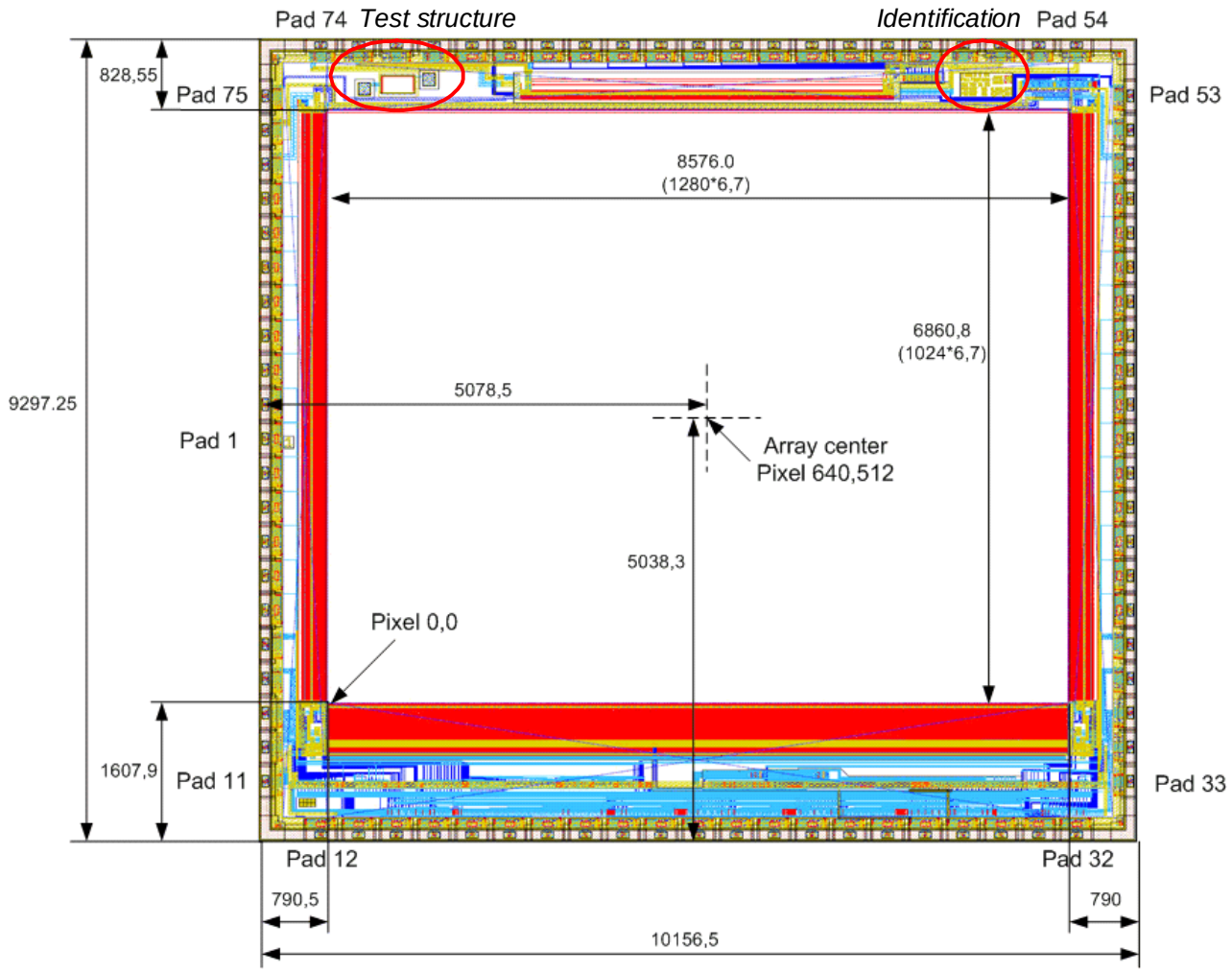

IPR2025-00339 Exhibit 2008 Page 30 of 42

IBIS5-B-1300 in 84-pin LCC Package

Technical Drawing of the 84-pin LCC Package

Figure 31. Top View of the 84-pin LCC Package (all dimensions in mm)

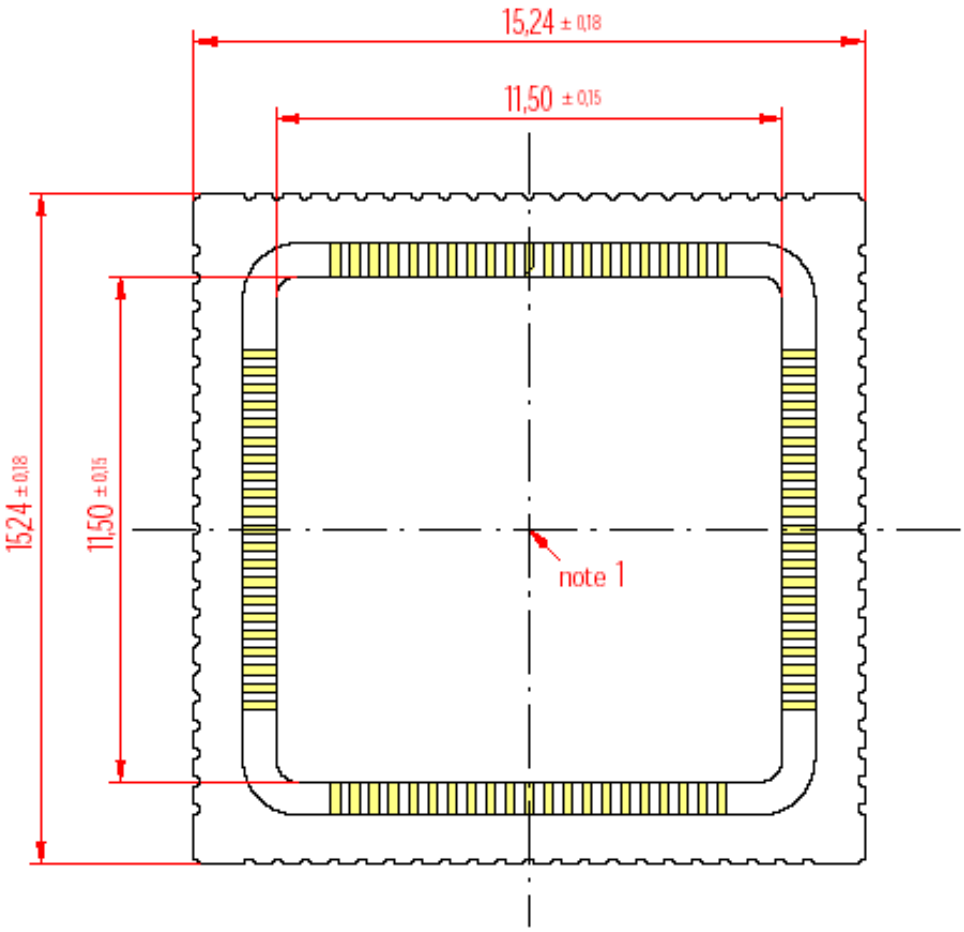

Figure 32. Side View of the 84-pin LCC Package (all dimensions in mm)

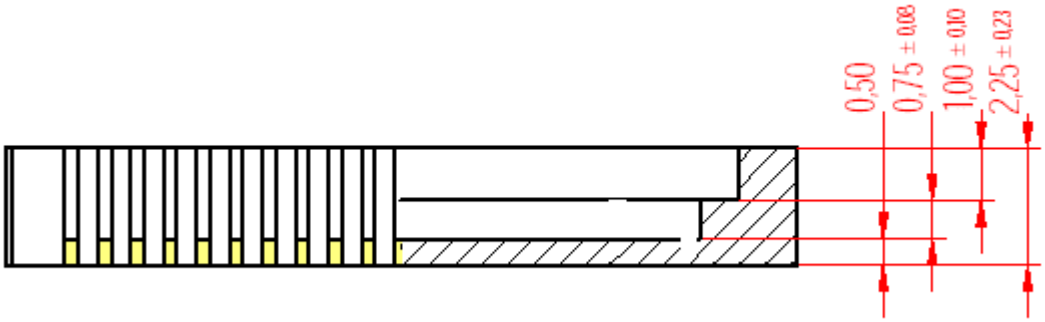

IPR2025-00339 Exhibit 2008 Page 31 of 42

Table 28.Side View Dimensions

Dimension	Description	(inch)			(mm)		
		Min.	Typ.	Max.	Min.	Typ.	Max.
A	Glass (thickness) - mono	0.020	0.022	0.024	0.500	0.550	0.600
B	Cavity (depth)	0.060	0.069	0.078	1.520	1.750	1.980
C	Die - Si (thickness) - mono		0.029			0.740	
D	Bottom layer (thickness)		0.020			0.500	
E	Die attach-bondline (thickness)	0.001	0.002	0.004	0.030	0.060	0.090
F	Glass attach-bondline (thickness)	0.001	0.003	0.004	0.030	0.070	0.110
G	Imager to lid-outer surface		0.062			1.570	
H	Imager to lid-inner surface		0.037			0.950	
J	Imager to seating plane of package	0.050	0.051	0.052	1.270	1.300	1.330

Figure 33. Side View Dimensions

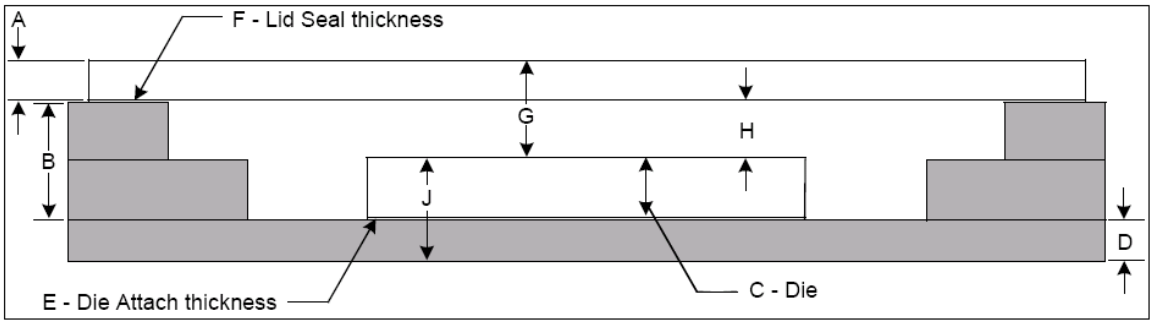

Figure 34. Bottom View of the 84-pin LCC Package (all dimensions in mm)

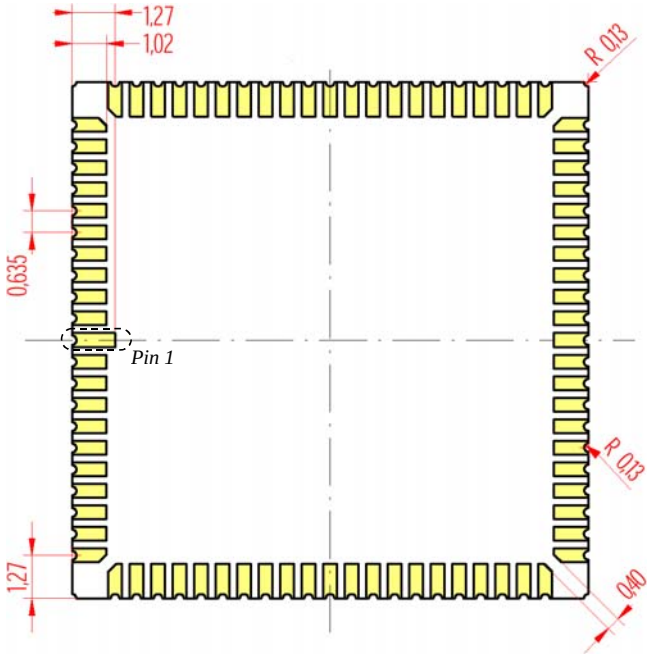

Bonding of the IBIS5-B-1300 Sensor in the 84-pin LCC Package

Figure 35. Bonding of the IBIS5-B-1300 in the 84-pin LCC Package

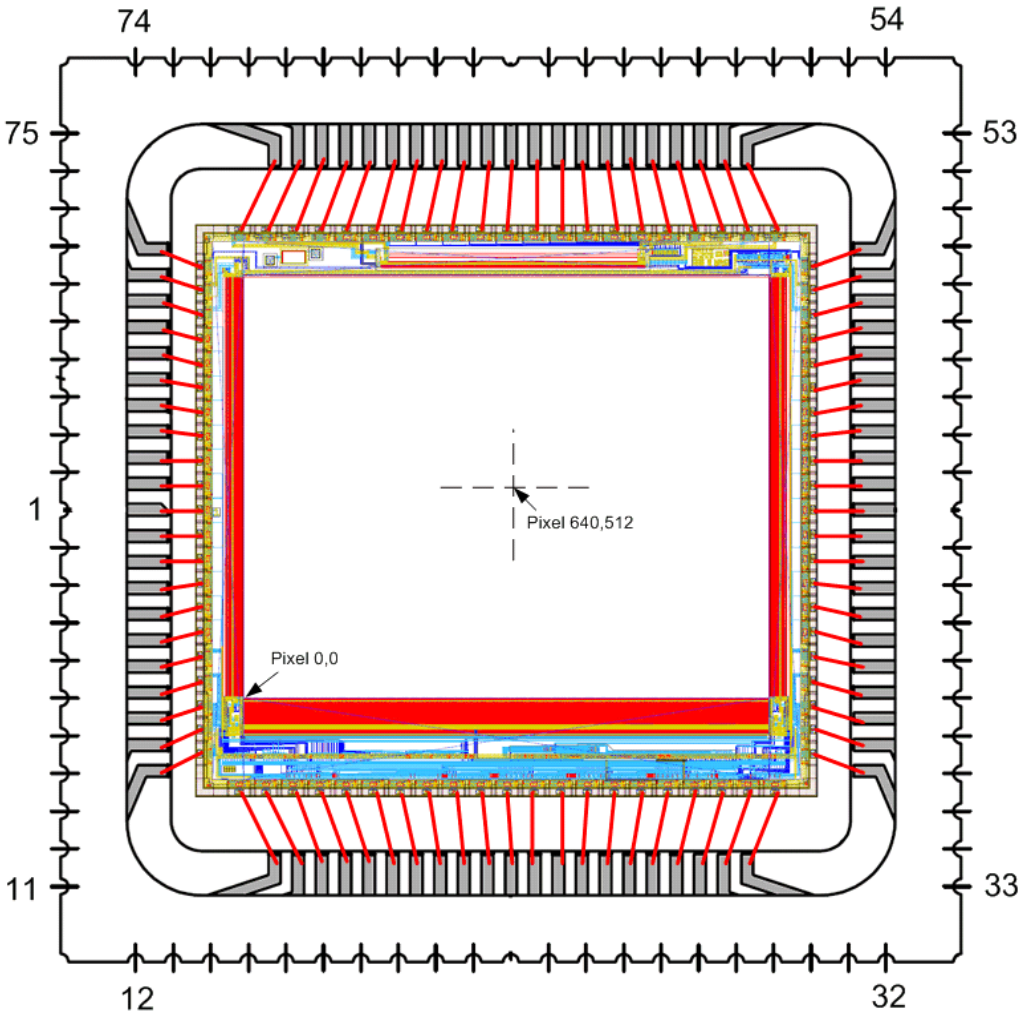

IPR2025-00339 Exhibit 2008 Page 33 of 42

Die Placement of the IBIS5-B-1300 in the 84-pin LCC Package

Figure 36. Die Placement of the IBIS5-B-1300 in the 84-pin LCC Package (all dimensions in mm)

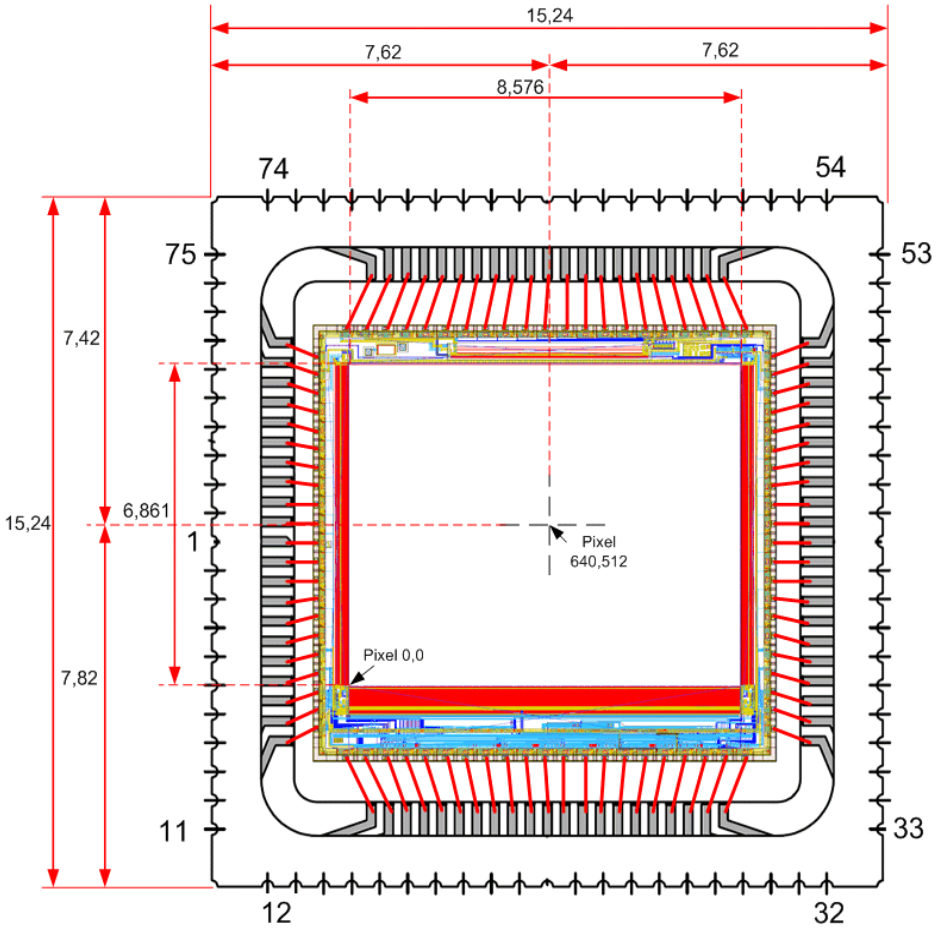

Tolerance on the die placement in X- and Y-directions is maximal ±50 µm.

IBIS5B in BGA Package

Mechanical drawing of the BGA package

Figure 37. Mechanical Drawing of the BGA Package

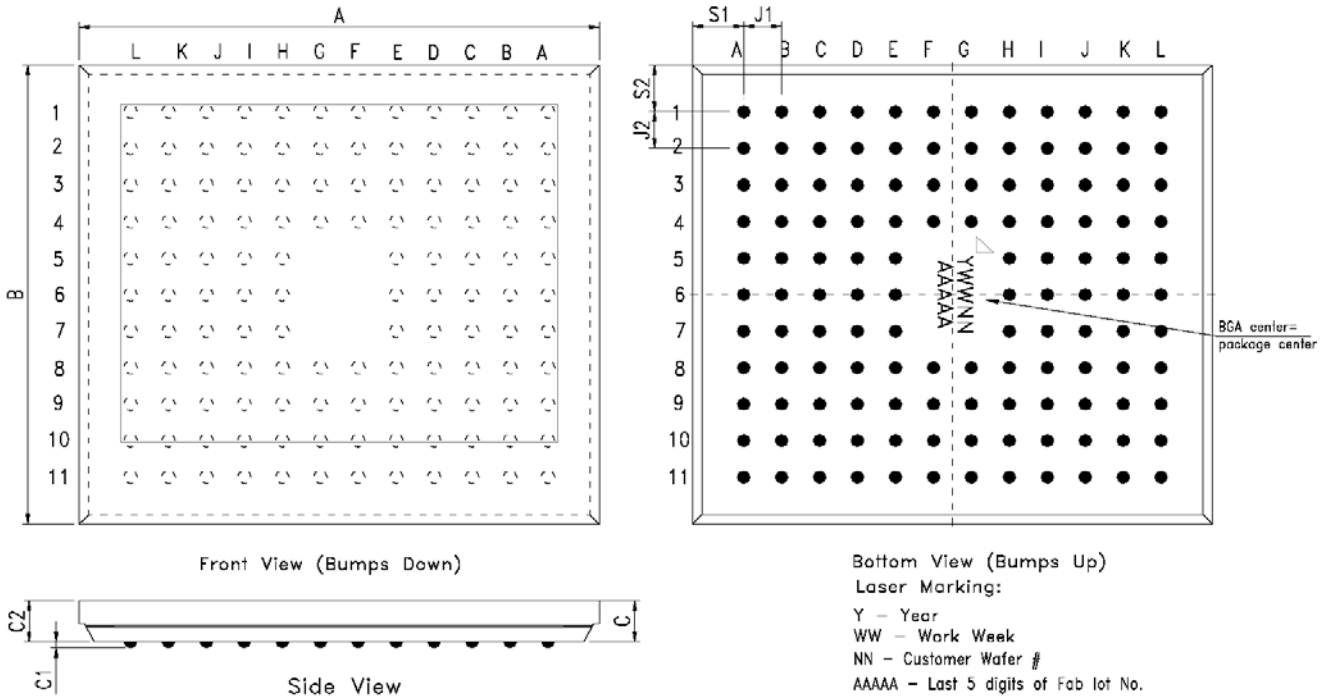

Dimensions of the BGA package

Figure 38. Dimensions of the BGA Package

	Symbol	Nominal	Min	Max	Nominal	Min	Max
		Millimeters			Inches		
Package Body Dimension X	A	10.180	10.155	10.205	0.40079	0.39980	0.40177
Package Body Dimension Y	B	9.320	9.295	9.345	0.36693	0.36594	0.36791
Package Height	C	0.835	0.775	0.895	0.03287	0.03051	0.03524
Package Body Thickness	C2	0.705	0.670	0.740	0.02776	0.02638	0.02913
Ball Height	C1	0.130	0.100	0.160	0.00512	0.00394	0.00630
Ball Diameter	D	0.300	0.270	0.330	0.01181	0.01063	0.01299
Total Ball Count	N	126 (42 NC)					
Ball Count X axis	N1	12					
Ball Count Yaxis	N2	11					
Pins Pitch X axis	J1	0.750					
Pins Pitch Y axis	J2	0.750					
Edge to Ball Center Distance along X	S1	0.965	0.935	0.995	0.03799	0.03681	0.03917
Edge to Ball Center Distance along Y	S2	0.910	0.880	0.940	0.03583	0.03465	0.03701

IPR2025-00339 Exhibit 2008 Page 35 of 42

Optical area location and ball placement

Figure 39. Location of the Optical Area and Ball Placement

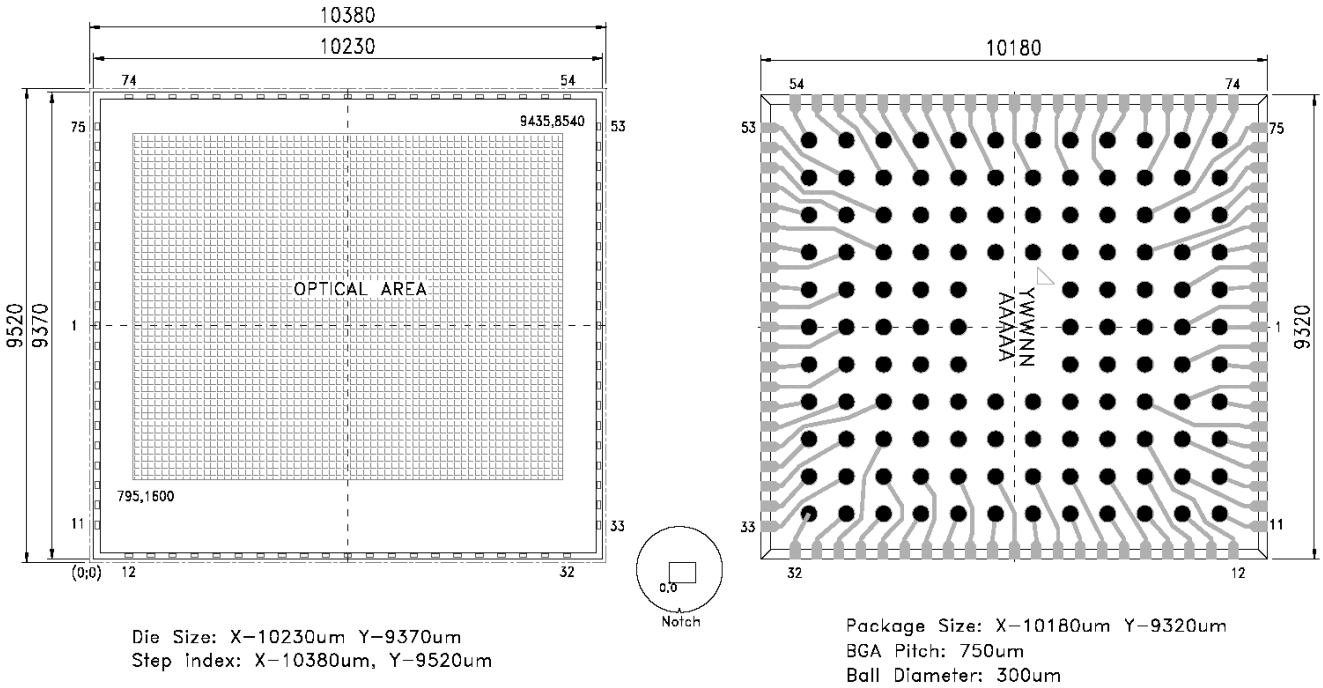

Ball grid contact pins

Figure 40. Ball Connection Matrix

	A	B	C	D	E	F	G	H	I	J	K	L
1	54	55	57	59	61	63	65	67	69	70	72	74
2	52	53	56	58	60	62	64	66	68	71	73	76
3	49	50	51	NC	NC	NC	NC	NC	NC	75	77	78
4	47	46	48	NC	NC	NC	NC	NC	NC	79	80	81
5	45	44	NC	NC	NC			NC	NC	NC	82	83
6	43	42	NC	NC	NC			NC	NC	NC	84	1
7	41	40	NC	NC	NC			NC	NC	NC	2	3
8	39	38	37	NC	NC	NC	NC	NC	NC	6	4	5
9	36	35	30	NC	NC	NC	NC	NC	NC	12	8	7
10	34	33	28	26	24	22	20	18	16	14	10	9
11	32	31	29	27	25	23	21	19	17	15	13	11

IPR2025-00339 Exhibit 2008 Page 36 of 42

Cover Glass

A D263 glass lid (which has a refraction index of 1.52) is used as a protection glass lid on top of all IBIS5-B-1300 sensors. Figure 41 shows the transmission characteristics of the D263 glass.

Figure 41. Transmission Characteristics of the D263 Glass

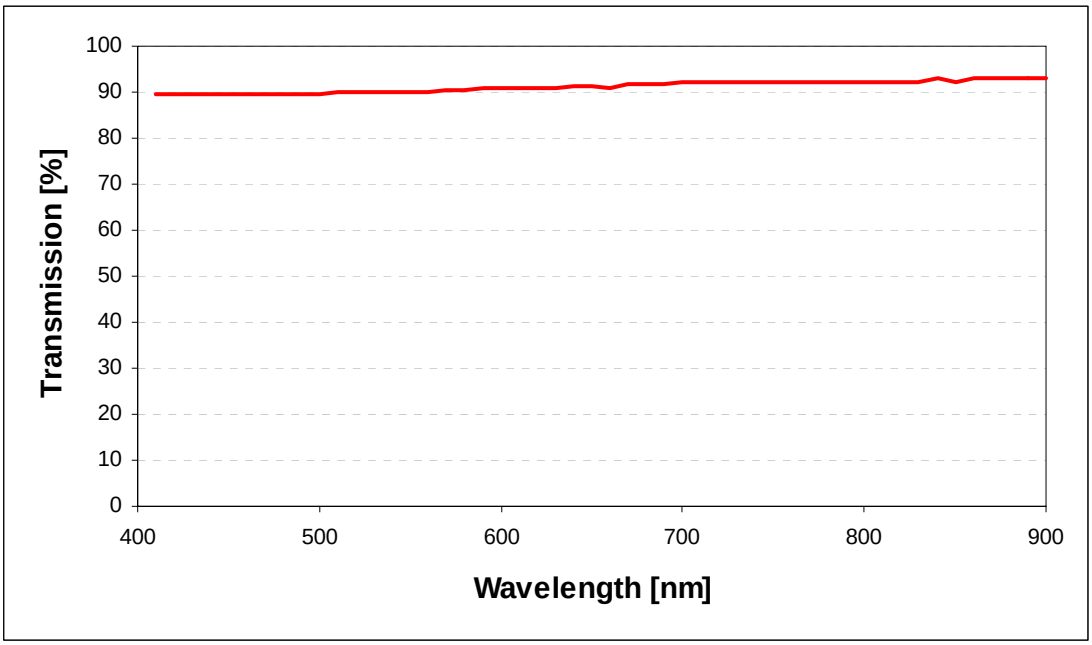

IPR2025-00339 Exhibit 2008 Page 37 of 42

Storage and Handling

Storage Conditions

Table 29.Storage Conditions

Description	Minimum	Maximum	Units
Temperature	–30	+85	°C

Handling and Soldering Conditions

Special care must be taken when soldering image sensors with color filter arrays (RGB color filters) onto a circuit board since color filters are sensitive to high temperatures. Prolonged heating at elevated temperatures may result in deterioration of the performance of the sensor. The following recommendations are made to ensure that sensor performance is not compromised during end-users' assembly processes.

Board Assembly

Device placement onto boards must be done in accordance with strict ESD controls for Class 0, JESD22 Human Body Model, and Class A, JESD22 Machine Model devices. Assembly operators must always wear all designated and approved grounding equipment; grounded wrist straps at ESD protected workstations are recommended including the use of ionized blowers. All tools must be ESD protected.

Manual Soldering

When a soldering iron is used the following conditions must be observed:

Use a soldering iron with temperature control at the tip. The soldering iron tip temperature must not exceed 350°C.

The soldering period for each pin must be less than 5 seconds.

Reflow Soldering

Figure 42 shows the maximum recommended thermal profile for a reflow soldering system. If the temperature/time profile exceeds these recommendations damage to the image sensor may occur. See Figure 42 for more details.

Precautions and Cleaning

Avoid spilling solder flux on the cover glass; bare glass and particularly glass with antireflection filters may be adversely affected by the flux. Avoid mechanical or particulate damage to the cover glass.

It is recommended that isopropyl alcohol (IPA) be used as a solvent for cleaning the image sensor glass lid. When using other solvents, it must be confirmed beforehand whether or not the solvent will dissolve the package and/or the glass lid.

RoHS (lead-free) Compliance

This paragraph reports the use of Hazardous chemical substances as required by the RoHS Directive (excluding packing material).

Table 30.The Chemical Substances and Information about Any Intentional Content

Chemical Substance	Any intentional content?	If there is any intentional content, in which portion is it contained?
Lead	NO	-
Cadmium	NO	-
Mercury	NO	-
Hexavalent chromium	NO	-
PBB (Polybrominated biphenyls)	NO	-
PBDE (Polybrominated diphenyl ethers)	NO	-

Figure 42. Reflow Soldering Temperature Profile

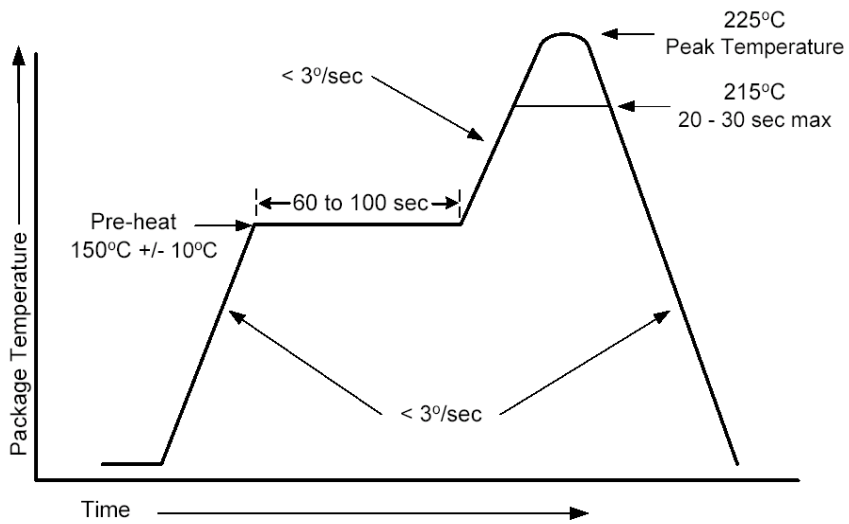

IPR2025-00339 Exhibit 2008 Page 38 of 42

Information on Lead-free Soldering:

IBIS5-B-1300-M2 (serial numbers beyond 3694): the product was tested successfully for lead-free soldering processes, using a reflow temperature profile with maximum 260°C, minimum 40s at 255°C and minimum 90s at 217°C.

Note

"Intentional content" is defined as any material demanding special attention is contained into the inquired product by following cases:

1. A case that the above material is added as a chemical composition into the inquired product intentionally in order to produce and maintain the required performance and function of the intended product
2. A case that the above material, which is used intentionally in the manufacturing process, is contained in or adhered to the inquired product

The following case is not treated as "intentional content":

1. A case that the above material is contained as an impurity into raw materials or parts of the intended product. The impurity is defined as a substance that cannot be removed industrially, or it is produced at a process such as chemical composing or reaction and it cannot be removed technically.

Ordering Information

Cypress Part number	Package	Glass Lid[7]	Mono/Color
CYII5SC1300AA-HSC	84-pin JLCC[6]	Mono	Mono
CYII5SC1300AB-HDC	84-pin JLCC[6]	Mono	RGB Bayer
CYII5SM1300AB-HDC	84-pin JLCC[6][8]	Mono	Mono
CYII5SM1300AB-QDC	84-pin LCC	Mono	Mono
CYII5SC1300AB-QDC	84-pin LCC	Mono	RGB Bayer
CYIIFM1300AB-QDC	84-pin LCC	Mono	Mono
CYII5SM1300AB-SDCES (preliminary)	126 BGA[9]	Mono	Mono
CYII5FM1300AB-SDCES (preliminary)	126 BGA[8][9]	Mono	Mono

Notes

6. JLCC package for use in evaluation kits only.
7. D263 is used as protective cover glass lid (see Figure 41 for spectral transmittance).
8. The CYII5FM1300AB has a thicker epitaxial Si layer for enhanced sensitivity in the NIR region
9. The 126 BGA case package is currently only offered on a sample base.

Other packaging combinations are available upon special request.
Contact your local Cypress sales office for more information about part names, prices and availability.

© Cypress Semiconductor Corporation, 2006. The information contained herein is subject to change without notice. Cypress Semiconductor Corporation assumes no responsibility for the use of any circuitry other than circuitry embodied in a Cypress product. Nor does it convey or imply any license under patent or other rights. Cypress products are not warranted nor intended to be used for medical, life support, life saving, critical control or safety applications, unless pursuant to an express written agreement with Cypress. Furthermore, Cypress does not authorize its products for use as critical components in life-support systems where a malfunction or failure may reasonably be expected to result in significant injury to the user. The inclusion of Cypress products in life-support systems application implies that the manufacturer assumes all risk of such use and in doing so indemnifies Cypress against all charges.

Appendix A: IBIS5 Evaluation System

For evaluating purposes an IBIS5 evaluation kit is available.

The IBIS5 evaluation kit consists of a multifunctional digital board (memory, sequencer and IEEE 1394 Fire Wire interface) and an analog image sensor board.

Visual Basic software (under Win 2000™ or XP™) allows the grabbing and display of images and movies from the sensor. All acquired images and movies can be stored in different file formats (8 or 16-bit). All setting can be adjusted on the fly to evaluate the sensors specs. Default register values can be loaded to start the software in a desired state.

Figure 43. Content of the IBIS5 Evaluation Kit

IPR2025-00339 Exhibit 2008 Page 40 of 42

Appendix B: IBIS5-1300 Revision Overview

Table 31.IBIS5-1300 Revision Differences

Parameter	IBIS5-1300	IBIS5-A-1300	IBIS5-AE-1300	IBIS5-B-1300
Status	Obsolete	Production	Production	Sampling
QE * FF (peak)	0.13 A/W (@ 650 nm)	0.16 A/W (@ 650 nm)	0.21 A/W (@ 760 nm)	0.16 A/W (@ 650 nm)
Full well charge	120.000 e-	62.500 e-	62.500 e-	62.500 e-
Output signal swing	1V (unity gain) 1.8V (max.)	1.1V (unity gain) 1.8V (max)	1.1V (unity gain) 1.8V (max)	1.1V (unity gain) 1.8V (max)
Conversion gain	12 µV/e–	17.6 µV/e–	17.6 µV/e–	17.6 µV/e–
Temporal noise	85 e–	40 e–	40 e–	40 e–
S/N ratio	1412:1 / 63 dB	1563:1 / 64 dB	1563:1 / 64 dB	1563:1 / 64 dB
FPN	0.34 (% of fw)	0.15 (% of fw)	0.15 (% of fw)	0.15 (% of fw)
PRNU (at Qsat/2)	< 10% (p-p)	< 10% (p-p)	< 10% (p-p)	< 10% (p-p)
Dark current (average)	66 mV/s	7.22 mV/s	7.22 mV/s	7.22 mV/s
Pixel output rate	40 MHz	40 MHz	40 MHz	40 MHz
Frame rate	27.5 fps[10]	27.5 fps[10]	27.5 fps[10]	27.5 fps[10]
Interface	Serial-2-wire[11] Serial-3-wire Parallel	Serial-3-wire Parallel	Serial-3-wire Parallel	Serial-2-wire[11] Serial-3-wire Parallel
Extended dynamic range	Double/multiple slope	Double/multiple slope	Double/multiple slope	Double/multiple slope
Timing	See "Timing Diagrams" on page 17	Identical	Identical	Identical
Biasing: DEC_CMD DAC_VHIGH DAC_VLOW AMP_CMD COL_CMD PC_CMD ADC_CMD ADC_VHIGH ADC_VLOW	50 kΩ 5 kΩ 10 kΩ 50 kΩ 50 kΩ 25 kΩ 50 kΩ 130Ω 240Ω	50 kΩ 0Ω 0Ω 50 kΩ 50 kΩ 25 kΩ 50 kΩ 90Ω 360Ω	50 kΩ 0Ω 0Ω 50 kΩ 50 kΩ 25 kΩ 50 kΩ 90Ω 360Ω	50 kΩ 0Ω 0Ω 50 kΩ 50 kΩ 25 kΩ 50 kΩ 360Ω 1200Ω

All products and company names mentioned in this document may be the trademarks of their respective holders.

Notes
10. Rolling shutter mode (see also paragraph).
11. The serial-2-wire interface is a write-only I2C-compatible interface.

IPR2025-00339 Exhibit 2008 Page 41 of 42

Document History Page

Document Title: IBIS5-B-1300 CYII5FM1300AB 1.3 MP CMOS Image Sensor Document Number: 38-05710				
REV.	**ECN NO.**	**Issue Date**	**Orig. of Change**	**Description of Change**
**	310213	See ECN	FVK	New Data Sheet
*A	649064	See ECN	FPW	Ordering information update and new layout. Implemented the new template. Moved figure captions to the top of the figures and moved notes to the bottom of the page per new template. Verified all cross-referencing. Moved the specifications towards the back. Corrected one variable on the Master pages. Spelled checked.

IPR2025-00339 Exhibit 2008 Page 42 of 42