US005691765A

United States Patent [19]

Schieltz et al.

[11] Patent Number: 5,691,765

[45] Date of Patent: Nov. 25, 1997

[54] **IMAGE FORMING AND PROCESSING DEVICE AND METHOD FOR USE WITH NO MOVING PARTS CAMERA**

[75] Inventors: **Steve W. Schieltz**, Palm Beach County; **Terry Laurence Glatt**, Pompano Beach; **Carl Kupersmit**, Palm Beach County, all of Fla.

[73] Assignee: **Sensormatic Electronics Corporation**, Boca Raton, Fla.

[21] Appl. No.: **508,115**

[22] Filed: **Jul. 27, 1995**

[51] **Int. Cl.**[6] **H04N 5/225**

[52] **U.S. Cl.** **348/335**; 348/218

[58] **Field of Search** 348/207, 335, 348/340, 344, 218, 143, 169, 36, 39; 382/276, 285, 293; 395/125, 130, 136; H04N 5/225

[56] **References Cited**

U.S. PATENT DOCUMENTS

4,984,089	1/1991	Stiepel et al. .	
5,185,667	2/1993	Zimmermann .	
5,200,818	4/1993	Neta et al. .	
5,319,744	6/1994	Kelly et al.	195/136
5,359,363	10/1994	Kuban et al. .	
5,586,231	12/1996	Florent et al.	395/125

OTHER PUBLICATIONS

"Near–Fisheye CCD Camera Broadens View for Imaging", by Francis Hamit, Advanced Imaging, Mar., 1993.

NASA Tech Briefs, Mar., 1994, pp. 46 and 48.

Schott Fiber Optics, "Fused Fiber Optic Tapers", Apr., 1994.

Primary Examiner—Andrew Faile

Assistant Examiner—Tuan V. Ho

Attorney, Agent, or Firm—Robin, Blecker, Daley and Driscoll

[57] **ABSTRACT**

A video surveillance system has a camera equipped with a fisheye lens having a substantially hemispheric field of view. The system implements operations equivalent to the panning, tilting and zooming of a conventional camera without the use of moving parts. The lens is mounted vertically above a plane under surveillance. The camera produces a fisheye image made up of a plurality of pixels. The fisheye image is distorted due to the properties of the fisheye lens. The system corrects the distortion by mapping the pixels of the fisheye image to coordinates produced by selecting a particular part of the fisheye image to be viewed. This allows an operator to select parts of the field of view of the fisheye lens and view them as if they had been produced by a camera having a conventional lens being panned tilted or zoomed. The fisheye image formed by the camera is split into four separate image components carried by four bundles of optical fibers. Each bundle has a CCD and associated image processing circuitry which forms an electronic representation of the image component carried by that bundle.

11 Claims, 4 Drawing Sheets

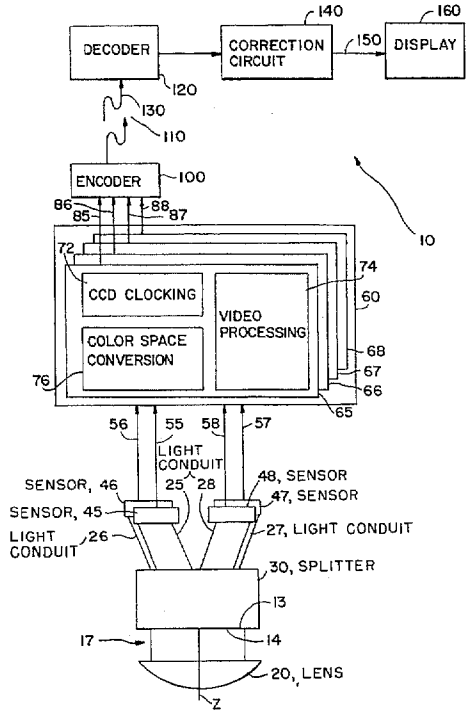

FIG. 1

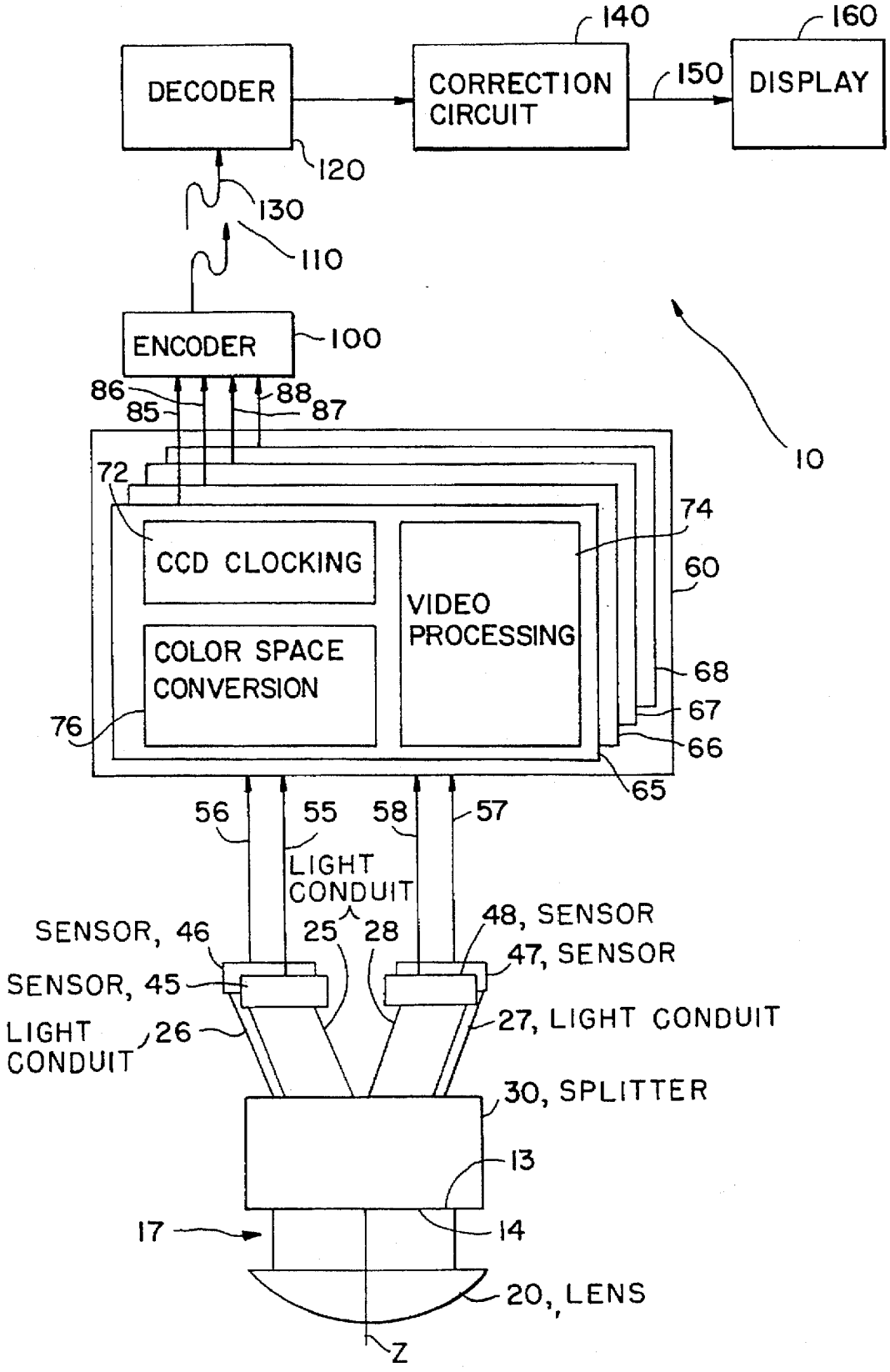
DECODER
CORRECTION CIRCUIT
DISPLAY
140
160
150
120
130
110
ENCODER
100
86
85
88
87
10
72
74
CCD CLOCKING
VIDEO PROCESSING
60
COLOR SPACE CONVERSION
68
67
76
66
65
56
55
58
57
LIGHT CONDUIT
SENSOR, 46
25
28
48, SENSOR
47, SENSOR
SENSOR, 45
27, LIGHT CONDUIT
LIGHT CONDUIT
26
30, SPLITTER
13
17
14
20, LENS
Z

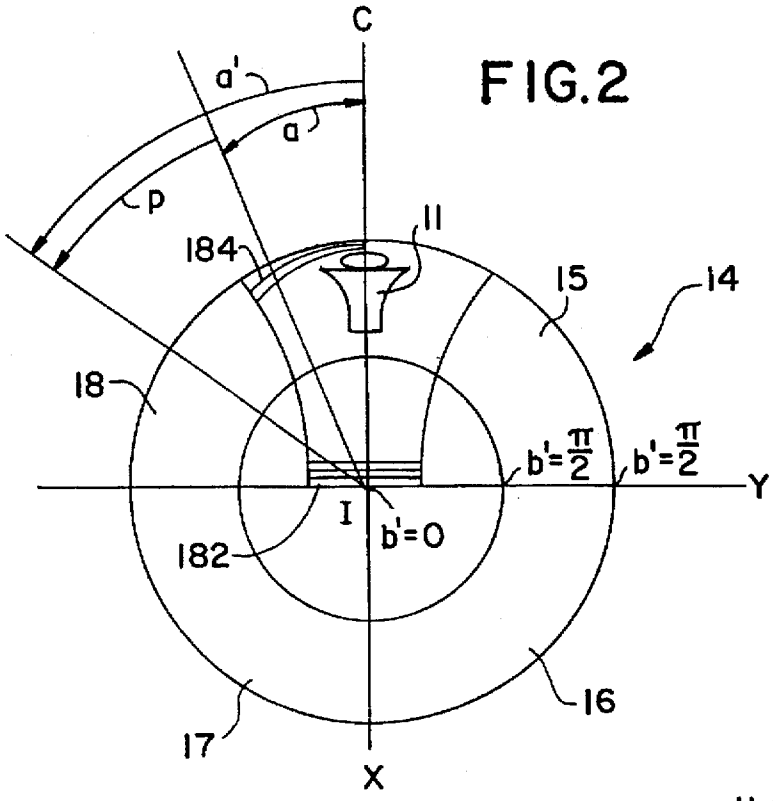

FIG.2

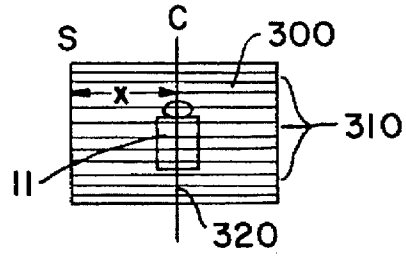

FIG.2A

FIG.3

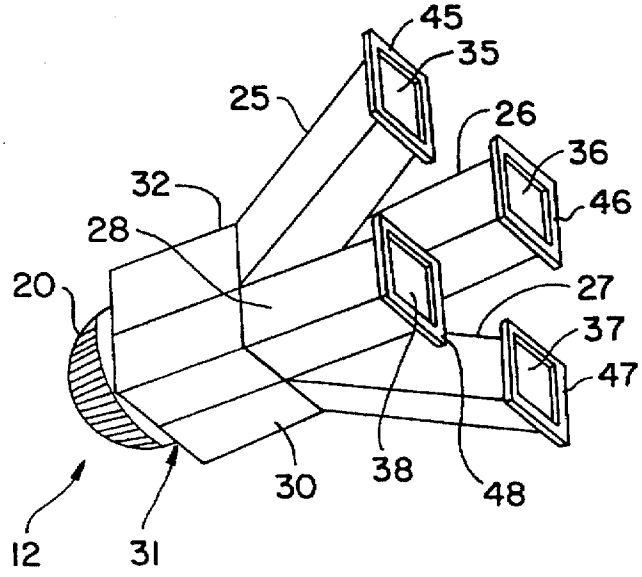

FIG.5

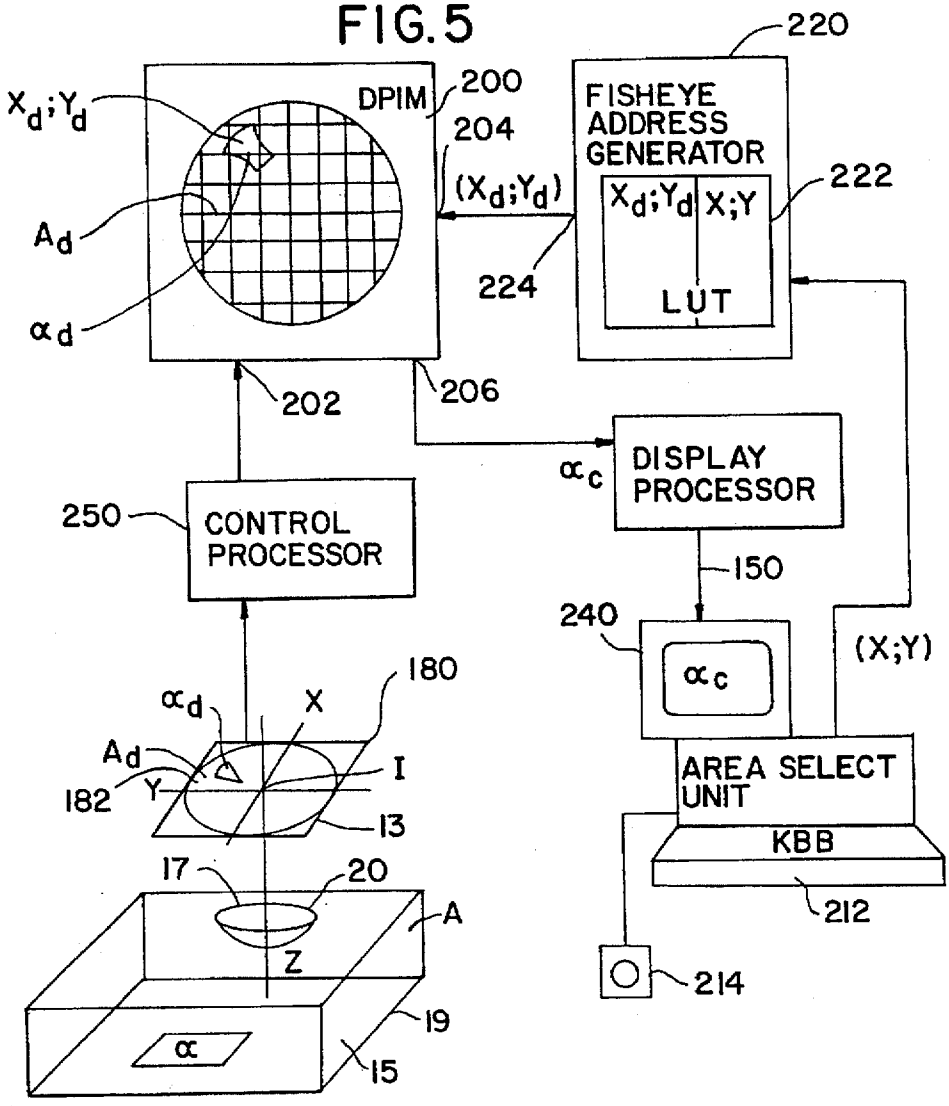
220
$X_d;Y_d$
DPIM
200
204
FISHEYE ADDRESS GENERATOR
222
$(X_d;Y_d)$
$X_d;Y_d$ X;Y
A_d
224
LUT
α_d
202
206
DISPLAY PROCESSOR
α_c
250
CONTROL PROCESSOR
150
240
α_c
(X;Y)
180
α_d
X
A_d
I
182
Y
13
AREA SELECT UNIT
KBB
17
20
A
212
Z
214
19
α
15

FIG.4

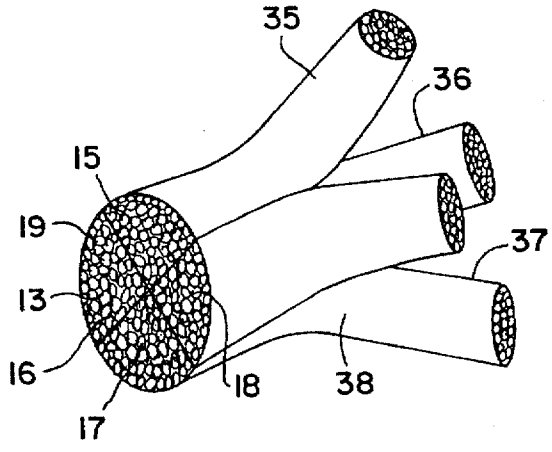
35
36
15
19
37
13
16
18
38
17

FIG.6

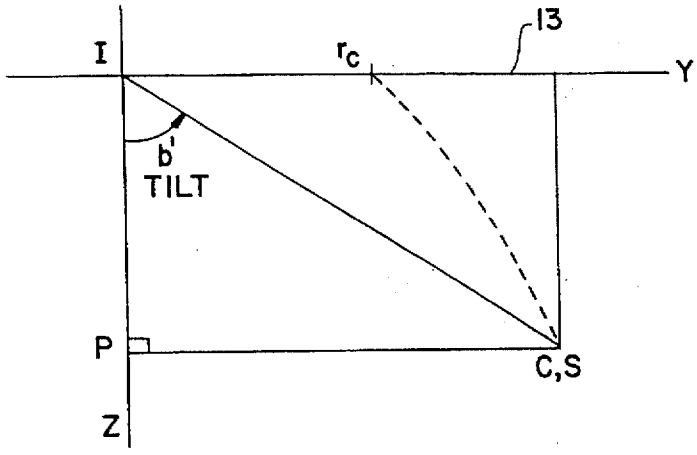

FIG.7

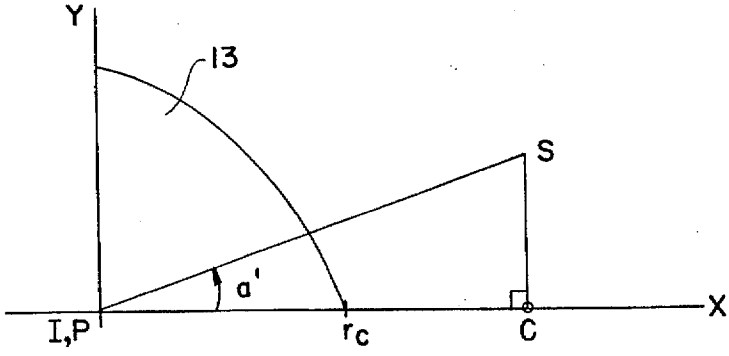

FIG.8

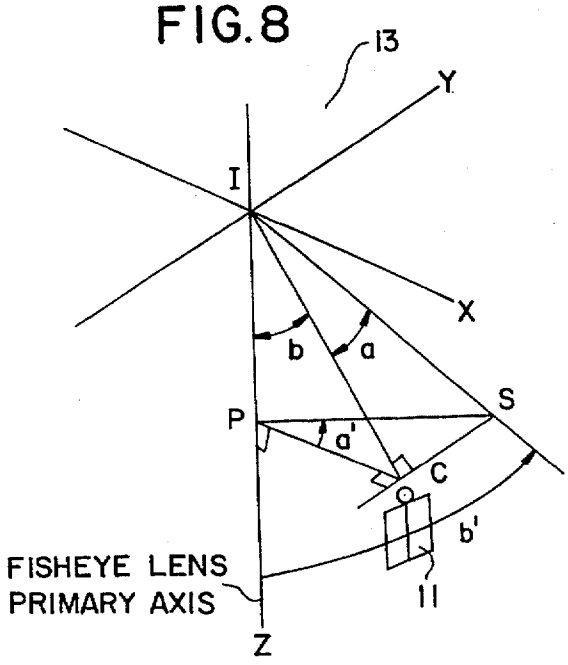

IMAGE FORMING AND PROCESSING DEVICE AND METHOD FOR USE WITH NO MOVING PARTS CAMERA

BACKGROUND OF THE INVENTION

1. Field of the Invention

This invention relates generally to the field of video surveillance systems. More specifically, it relates to an image forming and processing device including a fisheye lens having a substantially hemispherical field of view. The invention allows an operator to view a selected part of the image formed by the fisheye lens as if it were formed by a normal lens by simulating the panning, tilting or zooming of the normal lens. This allows the operations of panning, tilting and zooming to be implemented without the use of moving parts.

2. Description of Related Art

Surveillance cameras are commonly used to monitor areas of retail stores, factories, airports and the like. In order to use a single camera to survey a large area, the camera is typically provided with mechanisms to enable it to pan, tilt and zoom. Such mechanisms increase the complexity and hence the cost of the camera and can also adversely affect its reliability. Due to the presence of moving parts, mechanical pan, tilt and zoom devices are subject to damage and degradation brought on by extremes of temperature, moisture and dust. In addition, such mechanical systems consume relatively large amounts of power. A surveillance camera capable of panning, tilting and zooming without the use of moving parts would therefore provide significant advantages over existing surveillance cameras.

In U.S. Pat. No. 5,185,667, Zimmermann proposes such a camera having no moving parts. In the device specified in that patent, a fisheye lens is coupled to a video camera such that the camera produces an electronic image. Due to the characteristics of the fisheye lens, the image is distorted. The distortion in the image is corrected by means of an algorithm.

One of the limitations of the system proposed by Zimmermann is that the camera is unable to provide sufficient resolution for effective zooming. Since a fisheye lens renders a distorted image of an entire hemisphere, parts of the image, especially at its peripheries are distorted. The image is formed on a change coupled device (CCD) having a limited number of pixels. In order to view the image as a normal (non-distorted) image, it is necessary to transform the image electronically. The limited number of pixels in the CCD causes the transformed image to be poorly resolved. In order to provide acceptable resolution, a CCD made of approximately 156,000,000 would be needed.

The best available CCD's have approximately 16,000,000 pixels (4,000×4,000) and operate at clocking rates of the order of 10 Mhz. However, in order to satisfy the NTSC sampling rate of 30 samples per second, a clocking rate of 480 MHz is needed. Thus, the type of resolution required for an NTSC picture with the desired magnification cannot be achieved using the prior art.

In U.S. Pat. No. 5,200,818, Neta et al. describe a system in which a wide angle scene is monitored by means of a plurality of sensor arrays mounted on a generally hemispherical surface. Each sensor array has its own lens system. This allows a wide field to be monitored without the need for moving parts to effect panning and tilting. The resolution of the system would be relatively high due to the plurality of sensor arrays. However a system such as that described by Neta et al. would be very costly to implement due to the large number of high quality components needed.

It is an object of the present invention to provide a surveillance camera apparatus, having a substantially hemispherical field of view and capable of effecting the operations of panning, zooming and tilting without the use of moving parts, while still providing sufficient resolution to allow the desired magnification.

It is a further object of the invention to provide a surveillance camera apparatus, having a substantially hemispherical field which allows an operator to view parts of the field of view as if they were acquired by a camera having a conventional lens and being capable of panning, tilting or zooming.

These and other advantages are achieved by the invention described herein.

SUMMARY OF THE INVENTION

The present invention is a method of video surveillance comprising the following steps. A video camera is provided having an image plane and a fisheye lens. The fisheye lens has a lens constant indicative of distortion caused by the fisheye lens, a primary axis and a substantially hemispheric field of view. The camera has an image plane which has a center point through which the primary axis passes. The camera is mounted at a mounting point vertically above a surveillance plane such that the primary axis of the fisheye lens lies substantially perpendicular to the surveillance plane. The video camera forms a fisheye image, which is distorted by the fisheye lens. The fisheye image is made up of a plurality of pixels, each pixel having unique fisheye coordinates.

A corrected image of sub-area in the field of view is generated by providing normal coordinates of an object in the field of view by simulating a hypothetical camera having a hypothetical axis. The hypothetical axis passes through the center point and the object in the field of view at specific pan and tilt angles. The operator selects an area of the fisheye image, the area comprising a subset of the pixels in the fisheye image. Each pixel of the subset is displaced from the specific pan angle by an angle "b."

The fisheye coordinates of each pixel of the subset of pixels is determined by means of a formula comprising the lens constant, the specific tilt angle and the angle "b." The corrected image of the sub-area is formed by mapping the subset of pixels to the normal coordinates.

BRIEF DESCRIPTION OF THE DRAWINGS

FIG. **1** is a block diagram of a system embodying the invention;

FIG. **2** is a plan view of the image plane of the fisheye lens showing a distorted fisheye image;

FIG. **2A** is a diagram of a selected part of the fisheye image, corrected using the present invention;

FIG. **3** is a perspective view of the image splitter of the invention;

FIG. **4** is a perspective view of the fiber optic bundles in the image splitter;

FIG. **5** is a block diagram of the fisheye distortion correction system of the invention;

FIG. **6** is a diagram showing the projection of a point C at tilt angle b on the Y axis of the image plane as a result of the fisheye distortion;

FIG. **7** is a diagram of the image plane X-Y showing the projection of a point C on the image plane; and

FIG. 8 is a three dimensional diagram showing the primary axis of the fisheye lens, the primary axis of a hypothetical camera panned and tilted to point at point C.

DETAILED DESCRIPTION

The following is a description of the preferred embodiment of the present invention. It is intended to be illustrative of the invention and not limiting. The full scope of the invention is to be determined by the appended claims and their equivalents.

The invention is shown in block diagram form in FIG. 1. Typically the invention is used in the surveillance of premises such as warehouses, stores, bus or train stations and the like. To this end, system **10** is provided with a lens **20** which has a substantially hemispherical field of view, for example a fisheye lens. It is preferable to have an azimuthal view of 180°, a zenithal view of 90° and an infinite depth of field. This produces the desired substantially hemispherical field. The preferred lens is a commercially available equidistant fisheye lens having a focal length of 1.9 mm, and an f stop of 1.8. Lens **20** has a primary axis Z and forms a circular image **14** on image plane **13**.

Due to the properties of lens **20**, image **14** is distorted. Specifically, the orientation of objects in image **14** is altered relative to their real orientation. For example, an object **11** in the field of view of lens **20** (See FIG. **8**) will appear on the periphery of image **14** in distorted form as shown in FIG. **2**.

Image **14** is preferably split into four separate components by splitter **30**. Image **14** could be split into any number of components, depending on the resolution required and the available technology. When image **14** is split into four components, each component respectively contains an image **15**, **16**, **17** or **18** made up of one quadrant of circular image **14**. (See FIG. **2**). Splitter **30** is made up of four light conduits **25**, **26**, **27** and **28**. Light conduits **25**, **26**, **27** and **28** respectively contain coherent fiber optic bundles **35**, **36**, **37** and **38** (See FIG. **4**). Images **15**, **16**, **17** and **18** are thus respectively carried in conduits **25**, **26**, **27** and **28** by fiber optic bundles **35**, **36**, **37** and **38**.

Splitter **30** is shown in greater detail in FIGS. **3** and **4**. Splitter **30** is made up of a housing **32** to which are attached conduits **25**, **26**, **27** and **28**. Optical fiber bundles **35**, **36**, **37** and **38** housed in conduits **25**, **26**, **27** and **28** respectively, branch off from a major bundle of fibers, terminating at image plane **13** in a polished surface. See FIG. **4**. Optical fiber bundles **35**, **36**, **37** and **38**, are each made up of a plurality of optical fibers. Each optical fiber carries a sample of image **14** formed by fisheye lens **20** and has a diameter of approximately 10 μm.

Images **15**, **16**, **17** and **18** respectively travel along each of conduits **25**, **26**, **27** and **28** and impinge respectively upon sensors **45**, **46**, **47** and **48**. Sensors **45**, **46**, **47** and **48** are 768×480 CCD's with fiberoptic windows formed from a fiberoptic faceplate which allows for direct coupling of the CCD's to the optical fibers. Suitable fiberoptic faceplates are available from Galileo Electrooptics Corporation of Sturbridge, Mass. under the name "CP Series." Images **15**, **16**, **17** and **18** are respectively converted by the sensors into representative electrical signals **55**, **56**, **57** and **58**.

Signals **55**, **56**, **57** and **58** are fed into CCD control processor **60** which is made up four identical off the shelf video camera sensor image controllers **65**, **66**, **67** and **68**, each corresponding respectively to one of signals **55**, **56**, **57** or **58**. Each of the control processors contains a CCD clocking circuit **72**, a video processing circuit **74** and a color space converter **76**. Color space conversion circuit **76** produces chrominance and luminance signals Cr, Cb and Y for each signal **55**, **56**, **57** and **58**.

Control processors **65**, **66**, **67** and **68** respectively produce video outputs **85**, **86**, **87** and **88** in the form of luminance and chrominance components suitable for compression by encoder **100**. Compression of the video signals **85**, **86**, **87** and **88** allows a very large number of image samples to be transmitted over a channel having limited bandwidth. The video outputs are therefore compressed if the lens is at a location remote from correction circuit **140**. Encoder **100** compresses the video signals **85**, **86**, **87** and **88** by compressing them in accordance with a compression scheme, for example, MPEG or H. **261**. Alternatively, a sub-band coding scheme can be used. Encoder **100** packetizes the video signals into a serial data stream for transmission over high speed network **110** such as coaxial cable or optical fibers. The compressed video signals are received by decoder **120** which performs a transform on the compressed video signals which is the inverse of the transform performed by encoder **100**.

Decoder **120** produces a decoded video signal **130** which is fed into correction circuit **140**. The purpose of correction circuit **140** is to correct the distortion introduced by fisheye lens **20**. This correction is performed in accordance with the algorithm described below. Correction circuit **140** produces a corrected signal **150** which is displayed on display **160**.

The following is a description of the system for correcting the fisheye distortion of image **14**. For the sake of simplicity, it will be assumed that the entire fisheye image **14** is formed on the surface of a single CCD **180** and that splitter **30** is not used. CCD **180** has axes X and Y. Lens **20** is mounted at a mounting point **17** vertically above surveillance plane **19**, preferably such that principal axis Z is perpendicular to surveillance plane **19**. Surveillance plane **19** is the floor of a room **15**. Mounting point **17** is on the ceiling of room **15**. Axes X, Y and Z intersect at center point I on the surface of CCD **180**. The surface of CCD **180** forms image plane **13** which is parallel to surveillance plane **19**.

Mounting the camera and fisheye lens above the surveillance field (i.e. on ceiling rather than on a wall) has several advantages. Firstly, with the camera on the ceiling, the field of view covers a full 360°. This allows the simulation of a pan through 360° rather than a pan range limited by the presence of the wall. In the case of a ceiling mounted lens, the hypothetical (simulated) pan axis is the primary axis Z of the fisheye lens, rather than an axis perpendicular to the primary axis in the case of a wall mounted lens. The angle about the primary axis Z is maintained from the object to the image. This facilitates the calculation of radial coordinates because the pan axis is already in radial form and no conversion is needed.

When any object is viewed on monitor **240**, the vertical center line of the image intersects the center point I of the image plane. The primary axis Z of the lens passes through this center point. There is therefore no need to rotate the images to view them in their correct orientation. In the correction algorithm set forth in U.S. Pat. No. 5,185,667, rotation of the image is separately calculated. Such a separate operation is not needed with the present invention.

When the lens is placed on a wall, objects of interest and objects which are furthest away tend to be at the center of the fisheye image. The greatest resolution is needed to view the details of those objects. When the fisheye lens is placed vertically above the surveillance plane, objects in the center are usually closest to the lens. Viewing of such objects does

not require high resolution and those objects are the least distorted. Objects which are furthest away from the lens appear at the peripheries of the fisheye image. However, the image formed by a fisheye lens has a higher density and therefore a lower CCD image resolution at the center than at its peripheries. Consider a part of a fisheye image having a radius of "R." The density of the pixels in the CCD on which the image is formed is uniform. Along a line passing through the center of the CCD, the image is spread over 2R pixels. At the circumference of the image, the image is spread over πR (half the circumference)—$\pi/2$ more pixels than for objects appearing at the center of the image. Thus placing the lens vertically above the surveillance plane provides far better resolution for distant objects than if the lens is placed perpendicular to the surveillance plane.

The following description refers to FIG. **5**. Fisheye lens **20** has a 180 degree field of view covering area "A." With lens **20** is mounted on the ceiling of room **15**, area A includes the floor and walls of the room. Fisheye lens **20** forms a fisheye image A_d of area A on image plane **13**. Any point in area A represented by unique coordinates (x;y), is displaced to point $(x_d;y_d)$ in the fisheye image A_d in accordance with the characteristics of fisheye lens **20**. Image plane **13** (the surface of CCD **180**) is made up of a matrix comprising a plurality of pixels **182**. Each pixel has unique fisheye coordinates. CCD thus produces an electronic representation of area A. This representation is fed into CCD control processor **250** (identical to control processor **60**) which produces chrominance and luminance values for each pixel in CCD **180**. Those chrominance and luminance values are stored in dual ported image memory ("DPIM") **200**. The present invention allows the user to manipulate the fisheye image electronically in order to implement the operations of panning, tilting and zooming. Thus a sub-area α of area A can be examined in detail by the transformation of sub-area α_d of area A_d from a distorted fisheye image into a normal image.

When the system is powered up a default corrected sub-area α_c appears on monitor **240**. The user selects sub-area α by means of area select unit **210**—a control station having a keyboard and a pointing device. This is done by using pointing device **214** to simulate the panning and a tilting of a hypothetical conventional camera. The image on monitor **240** appears to have been formed by a conventional camera. In reality, it is formed by correction of part of fisheye image **14**. The selection of sub-area α provides the normal (non-fisheye) coordinates of an object in the center of sub-area α. This operation simulates the pointing of the primary axis (IC in FIG. **8**) of hypothetical conventional camera at the object. The hypothetical camera is mounted at mounting point **17** with its primary axis IC passing through center point I and through the center of sub-area α. Pointing this hypothetical camera by means of input device **214** such that a sub-area α appears on monitor **240** also causes area select unit **210** to generate the pan and tilt angles which would be associated with the hypothetical camera positioned at hypothetical pan and tilt angles so that it points at an object in sub-area α.

When the user selects sub-area α the system automatically converts α_d (the distorted fisheye image of area α) into a corrected image α_c. This allows the user to view the sub-area α on monitor **240** as if it were formed by the hypothetical (non-fisheye) camera which had been panned and tilted to point at sub-area α.

Each of the pixels in the fisheye image A_d is stored at a unique address in DPIM **200** in the form of the intensity and color data generated by CCD **180** via control processor **250**. DPIM **200** thus contains a digital electronic representation of the distorted fisheye image A_d of area A. For any sub-area α of area A, DPIM **200** contains an electronic representation of the corresponding distorted sub-area α_d.

Image plane **13** is the plane formed by the X and Y axes as shown in FIGS. **6**, **7** and **8**. Primary axis Z of lens **20** is perpendicular to the X and Y axes. If a user wished to view in detail the scene centered around point C (i.e sub-area α—the image shown in FIG. **2**) with a hypothetical non-fisheye lensed camera, the user would instruct the camera to tilt by an angle b relative to the primary axis Z. Doing so would orient the hypothetical camera such that the hypothetical primary axis (center line IC) passes through the center point I of image plane **13** and through point C.

Had it been captured by the hypothetical conventional camera, area α would appear on CCD **180** as an image **300** centered at line **320** and made up of a large number of horizontal lines of pixels **310**. (See FIG. **2**). Each pixel on a particular horizontal line is displaced from center line **320** by a particular distance x. That distance corresponds to an angle "a" relative to center line IC (See FIG. **8**) or angle a' about primary axis Z.

Each pixel in image **14** can be described by reference to a set of rectangular or polar coordinates. Thus, referring to FIGS. **7** and **8**, the pixel at point C on center line IC can be located by reference to polar coordinates in the form of tilt angle b (See FIG. **6**) and angle a—the displacement of the pixel from center (for point C, a is equal to zero since C lies on the X axis). Similarly, moving along a horizontal line in CCD **180** (i.e., moving parallel to the Y axis), a pixel at point S can be described by reference to tilt angle b' relative to principle axis Z and pan angle a' relative to center line IC. The corresponding rectangular coordinates are x_d and y_d.

Referring again to FIG. **2**, it can be seen that due to the nature of the fisheye lens, the fisheye image is distorted. Objects located close to the principal axis of fisheye lens **20** appear on CCD **180** substantially normally (See area **182**), whereas, objects further from the principal axis are progressively more distorted (See area **184**). The information carried by a pixel located at point (x;y) in a non-fisheye image will, in the fisheye image, be located at $(x_d;y_d)$, where $(x_d;y_d)$ are displaced from (x;y) by an amount dependent on the properties of fisheye lens **20**.

It is a fundamental property of a fisheye lens that the image of a point located at an angle of rotation b' relative to the primary axis will be projected on the image plane a radius r from the primary axis in accordance with the formula:

$$r=f.b'$$

where r is the distance from center point I;

f is a lens constant in mm/radian indicative of the distortion caused by the fisheye lens; and

b' is the angle of an incident ray from an object to the primary axis (in radians).

It is also a fundamental property of a fisheye lens that the angle from a point in the field of view to its projection on the image plane is maintained.

These two properties are used to derive a new formula which allows selected parts of the fisheye image to be viewed as if they were formed by a conventional camera panned, tilted or zoomed in on an area of interest in the field of view. This formula relates the pan and tilt angles of a hypothetical camera described above to the rectangular coordinates of a corrected image. The following is a description of how that formula is derived and applied to achieve the objects of the invention.

From FIG. **6** it can be seen that a point C located at a tilt angle b relative to the principal axis of the lens forms an image on image plane IP at a radius $r=r_c$ from center point I. As stated above, for a particular fisheye lens, the relationship between tilt angle b and the radius at which the image of point C forms is:

$$r=f.b \tag{1}$$

In FIG. **8**, point C lies in the plane formed by the Y and Z axes and at a tilt angle of b relative to the primary axis Z. The line IC from the center I of the image plane to point C is taken as the primary axis of a hypothetical camera lens pointed at point C. Line CS extends from point C to a point S. CS is parallel to the X axis. CS thus represents a horizontal line of pixels in CCD **180**. Consider a pixel at S, at a particular radius r from I, the center of the CCD, and at a pan angle "a'" about the primary axis of the hypothetical camera lens and at a tilt angle b' relative to the primary axis of the fisheye lens. The rectangular coordinates of that pixel are:

$$X=f.b'.\cos(a') \tag{2}$$

$$Y=f.b'.\sin(a') \tag{3}$$

Equations (2) and (3) convert the polar coordinates of any particular pixel of the fisheye image formed on CCD to rectangular coordinates. The pixel at point S can therefore be located by reference to tilt angle b' (an angle measured off the principal axis Z) and pan angle a' (the angle of rotation around the principal axis Z).

When the system powers up a default area α is displayed, corresponding to the initial area at which the hypothetical camera is pointing. For convenience, this area lies along the primary axis Z (so the tilt angle b is zero). The pan angle is also zero (i.e., line IC lies along the X axis). The hypothetical camera (with the primary axis of its lens lying along line IC) is then tilted by an angle of "b" relative to the primary axis Z of the fisheye lens so that it points at an object centered at point C. In order to make the operation of the correction system transparent to the user, the panning and tilting of the hypothetical camera is measured relative to the initial position of the hypothetical camera. Thus, the position of a pixel representing a point at S will be expressed in terms of tilt angle "b" and the angle of point S from center line IC—angle "a" the amount of pan from center line IC to point S.

The following is a description of the manner in which the position of a pixel representing point S in the fisheye image can be described by reference to angle a—its displacement from the center line IC and angle b—the tilt angle of a hypothetical normal camera panned and tilted so that it's principal axis is aligned with point C.

Referring to FIG. **8**, it is seen that

$$\begin{aligned}
\tan(a') &= SC/PC \\
SC &= IS \cdot \sin(a) \\
PC &= IC \cdot \sin(b) \\
IC &= IS \cdot \cos(a) \\
\text{therefore } \tan(a') &= IS \cdot \sin(a)/IS \cdot \cos(a) \cdot \sin(b) \\
&= \tan(a)/\sin(b) \\
a' &= \tan^{-1}(\tan(a)/\sin(b)) \qquad (4) \\
\cos(b') &= IP/IS \\
IP &= IC \cdot \cos(b) \\
IC &= IS \cdot \cos(a)
\end{aligned}$$

-continued

$$\begin{aligned}
\text{therefore } \cos(b') &= IS \cdot \cos(a) \cdot \cos(b)/IS \\
&= \cos(a) \cdot \cos(b) \\
b' &= \cos^{-1}(\cos(a) \cdot \cos(b)) \qquad (5)
\end{aligned}$$

From equations (2) and (3), for a given fisheye lens, $X_d=fb'\cos(a')$ and $Y_d=fb'\sin(a')$. Substituting the values of a' and b' from equations (4) and (5) into equations (2) and (3):

$$X_d=f.\cos^{-1}(\cos(a).\cos(b)).\cos(\tan^{-1}(\tan(a)/\sin(b))) \tag{6}$$

$$Y_d=f.\cos^{-1}(\cos(a).\cos(b)).\sin(\tan^{-1}(\tan(a)/\sin(b))) \tag{7}$$

These formulas allow the coordinates of the pixels centered around center line IC to be calculated simply from knowledge of angular coordinates in the form of the tilt angle "b" of a hypothetical camera (a measure of the distance of the point from the center of the fisheye image) and the angle "a" of a pixel relative to center line IC. This formula provides a very simple means for effectuating panning, tilting and zooming from the fisheye image.

To effect panning of the hypothetical camera, pan angle p is added to angle a' to form new angle a". Thus, a"=p+a'. Substituting this into equation (4) gives:

$$a''=p+\tan^{-1}(\tan(a)/\sin(b)) \tag{8}$$

Substituting equation (a) into equations (6) and (7):

$$X_d=f.\cos^{-1}(\cos(a).\cos(b)).\cos(p+\tan^{-1}(\tan(a)/\sin(b)) \tag{9}$$

$$Y_d=f.\cos^{-1}(\cos(a).\cos(b)).\sin(p+\tan^{-1}(\tan(a)/\sin(b)) \tag{10}$$

As pointing device **214** is moved to simulate panning and/or tilting of the hypothetical camera, the rectangular coordinates (X;Y) of each pixel in each line of pixels in sub-area α are generated by area select unit **210** and stored in look-up table ("LUT") **222**. The system also automatically calculates the coordinates $(X_d;Y_d)$ of the fisheye image from the using equations (9) and (10). For each set of normal coordinates (X;Y) in sub-area α, the calculated coordinates $(X_d;Y_d)$ are stored in LUT **222** as addresses in DPIM **200**.

All of the coordinates for the fisheye image could be pre-calculated or only the coordinates for a particular area need be calculated as the area is selected. In either case, the coordinates are stored in LUT **222** and the corresponding pixels are stored in DPIM **200**. This allows the pixels corresponding to those calculated coordinates to be fetched from CCD **180**. The fetched pixels are then displayed on monitor **240** at locations (X;Y) just as if the image had been formed by the panning and tilting of a normal camera to coordinates (X;Y).

Zooming can be accommodated by varying the amount that angle a is incremented between pixels and the amount b is incremented between rows when calculating the contents of LUT **222**. For example, if there are 400 pixels on a horizontal display line and a is incremented from −20° for the left side of the display in steps of 0.1°, a 40° horizontal field of view will result. Likewise, to display a 30° vertical field of view that would correctly maintain the 4:3 aspect ratio of a standard display, the 483 display lines would be obtained by incrementing b by 0.062° between each horizontal display line.

The contents of LUT **222** and DPIM **200** are represented in the following table:

TABLE I

ADDRESS SEQUENCE FOR BOTH DATA STRUCTURES	FEA GENERATOR LUT CONTENTS	DUAL PORT MEMORY CONTENTS
Starting Address	Address of 1st pixel of 1st row	1st pixel 1st row
Starting Address + 1	Add. of 2nd pixel of 1st row	2nd pixel 1st row
.	.	.
.	.	.
.	.	.
Starting Address + H	Add. of 1st pixel of 2nd row	1st pixel 2nd row
Starting Address + H + 1	Add. of 2nd pixel of 2nd row	2nd pixel 2nd row
.	.	.
.	.	.
.	.	.
Starting Address + 2H	Add. of 1st pixel of 3rd row	1st pixel 3rd row
Starting Address + 2H + 1	Add. of 2nd pixel of 3rd row	2nd pixel 3rd row
.	.	.
.	.	.
.	.	.

H = Number of pixels per line in display processor.

By retaining multiple images in DPIM **200**, a historical log of images over time can also be stored. The oldest image is continually overwritten with the current image as the memory capacity is exceeded, thus maintaining a revolving log of images generated over a predetermined time period. Thus, by appropriate selection of an address in DPIM **200** by fisheye address generator, images captured in the preceding predetermined time interval can be displayed when an alarm event occurs (e.g. an intruder attempting to enter the monitored premises and triggering a sensor).

Using a 360 degree image, this system implements the operations of panning and tilting without any moving parts. This increases the reliability of the camera while limiting the cost of acquiring and maintaining it. The invention thus enables the monitoring of a large area by means of a single camera covering a wide field of view.

We claim:

1. A method of video surveillance comprising the steps of:

providing a video camera having an image plane and a fisheye lens, the fisheye lens having a lens constant indicative of distortion caused by the fisheye lens, a primary axis and a substantially hemispheric field of view and the camera having an image plane, the image plane having a center point through which the primary axis passes;

mounting the camera at a mounting point vertically above a surveillance plane such that the primary axis of the fisheye lens lies substantially perpendicular to the surveillance plane;

causing the video camera to form a fisheye image, the fisheye image being distorted by the fisheye lens and comprising a plurality of pixels, each pixel having unique fisheye coordinates;

generating a corrected image of sub-area in the field of view by the steps of:

providing angular coordinates of an object in the field of view by simulating a hypothetical camera having a hypothetical axis and such that the hypothetical axis passes through the center point and the object in the field of view at specific pan and tilt angles;

selecting an area of the fisheye image, wherein the area comprises a subset of the plurality of pixels, each pixel of the subset being displaced from the specific pan angle by an angle "a";

determining the unique fisheye coordinates of each pixel of the subset of the plurality of pixels by means of a formula comprising the lens constant, the specific tilt angle "b" and the angle "a", said formula being given by

$$X_d = f.\cos^{-1}(\cos(a).\cos(b)).\cos(\tan^{-1}(\tan(a)/\sin(b)))$$

$$Y_d = f.\cos^{-1}(\cos(a).\cos(b)).\sin(\tan^{-1}(\tan(a)/\sin(b))),$$

where "f" is the lens constant and X_d and Y_d are the unique fisheye coordinates; and

mapping the pixels in the subset of the plurality of pixels to normal coordinates, thereby forming the corrected image of the sub-area.

2. The method of claim **1** wherein the specific tilt angle is taken relative to the primary axis of the fisheye lens.

3. The method of claim **1** wherein the specific pan angle is taken relative to a prior pan angle about the primary axis.

4. The method of claim **1** wherein the step of mapping the pixels in the subset to the normal coordinates comprises the steps of:

providing a lookup table containing sets of pre-calculated coordinates calculated in accordance with the formula such that for each pixel in the subset of the plurality of pixels there is a corresponding set of angular coordinates, and such that for each set of angular coordinates, there is a set of pre-calculated pixel coordinates;

providing the angular coordinates to the lookup table and in response, causing the lookup table to output the pre-calculated pixel coordinates.

5. The method of claim **4** further comprising the steps of:

storing the plurality of pixels in an image memory, at .addresses corresponding to the pre-calculated coordinates, providing the pre-calculated coordinates to the image memory and receiving as an output from the image memory, the pixels in the subset of the plurality of pixels.

6. The method of claim **1** wherein the step of providing the angular coordinates of the object comprises the step of receiving the specific pan and tilt angles via a user input.

7. The method of claim **1** wherein the angular coordinates are polar coordinates and further comprising the step of converting the polar coordinates into the specific pan and tilt angles.

8. The method of claim **1** wherein the step of providing the angular coordinates of the object comprises the step of selecting an area on a video display and calculating the specific pan and tilt angles of the object based on cartesian coordinates of the sub-area.

9. The method of claim **1** further comprising the step of displaying the corrected image of the sub-area.

10. The method of claim **1** further comprising the step of zooming the corrected image.

11. The method of claim **10** wherein the step of zooming comprises incrementing angle "a".

* * * * *