US 20120201381A1

(19) United States

(12) Patent Application Publication

Miller et al.

(10) Pub. No.: US 2012/0201381 A1

(43) Pub. Date: Aug. 9, 2012

(54) **CRYPTOGRAPHIC SECURITY FUNCTIONS BASED ON ANTICIPATED CHANGES IN DYNAMIC MINUTIAE**

(75) Inventors: **Paul Timothy Miller**, Irvine, CA (US); **George Allen Tuvell**, Thompson's Station, TN (US)

(73) Assignee: **mSignia, Inc.**, Irvine, CA (US)

(21) Appl. No.: **13/366,197**

(22) Filed: **Feb. 3, 2012**

Related U.S. Application Data

(60) Provisional application No. 61/462,474, filed on Feb. 3, 2011.

Publication Classification

(51) **Int. Cl.**
H04K 1/00 (2006.01)

(52) **U.S. Cl.** **380/255**

(57) **ABSTRACT**

Dynamic key cryptography validates mobile device users to cloud services by uniquely identifying the user's electronic device using a very wide range of hardware, firmware, and software minutiae, user secrets, and user biometric values found in or collected by the device. Processes for uniquely identifying and validating the device include: selecting a subset of minutia from a plurality of minutia types; computing a challenge from which the user device can form a response based on the selected combination of minutia; computing a set of pre-processed responses that covers a range of all actual responses possible to be received from the device if the combination of the particular device with the device's collected actual values of minutia is valid; receiving an actual response to the challenge from the device; determining whether the actual response matches any of the pre-processed responses; and providing validation, enabling authentication, data protection, and digital signatures.

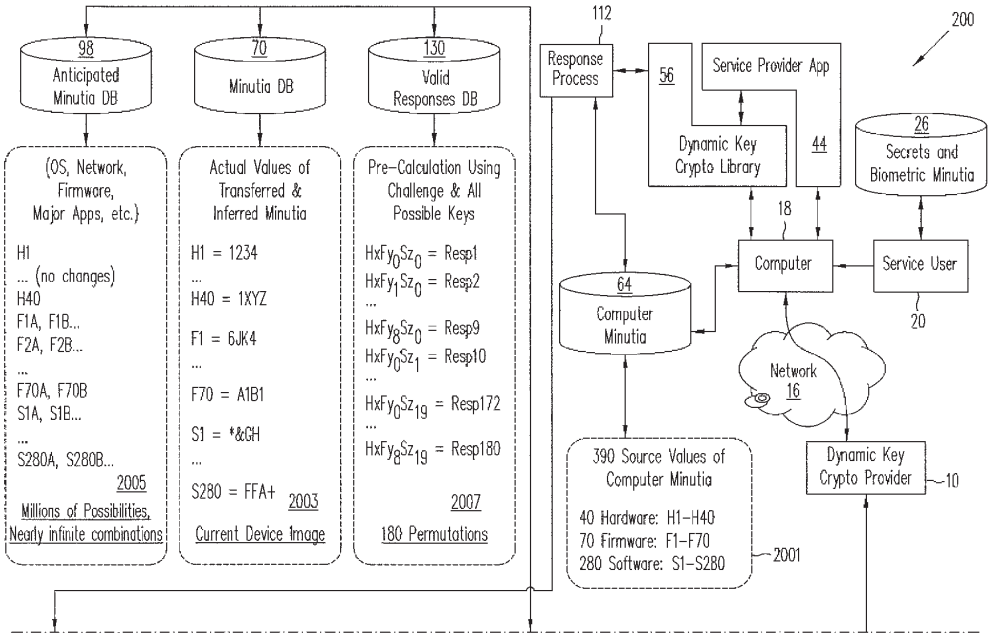

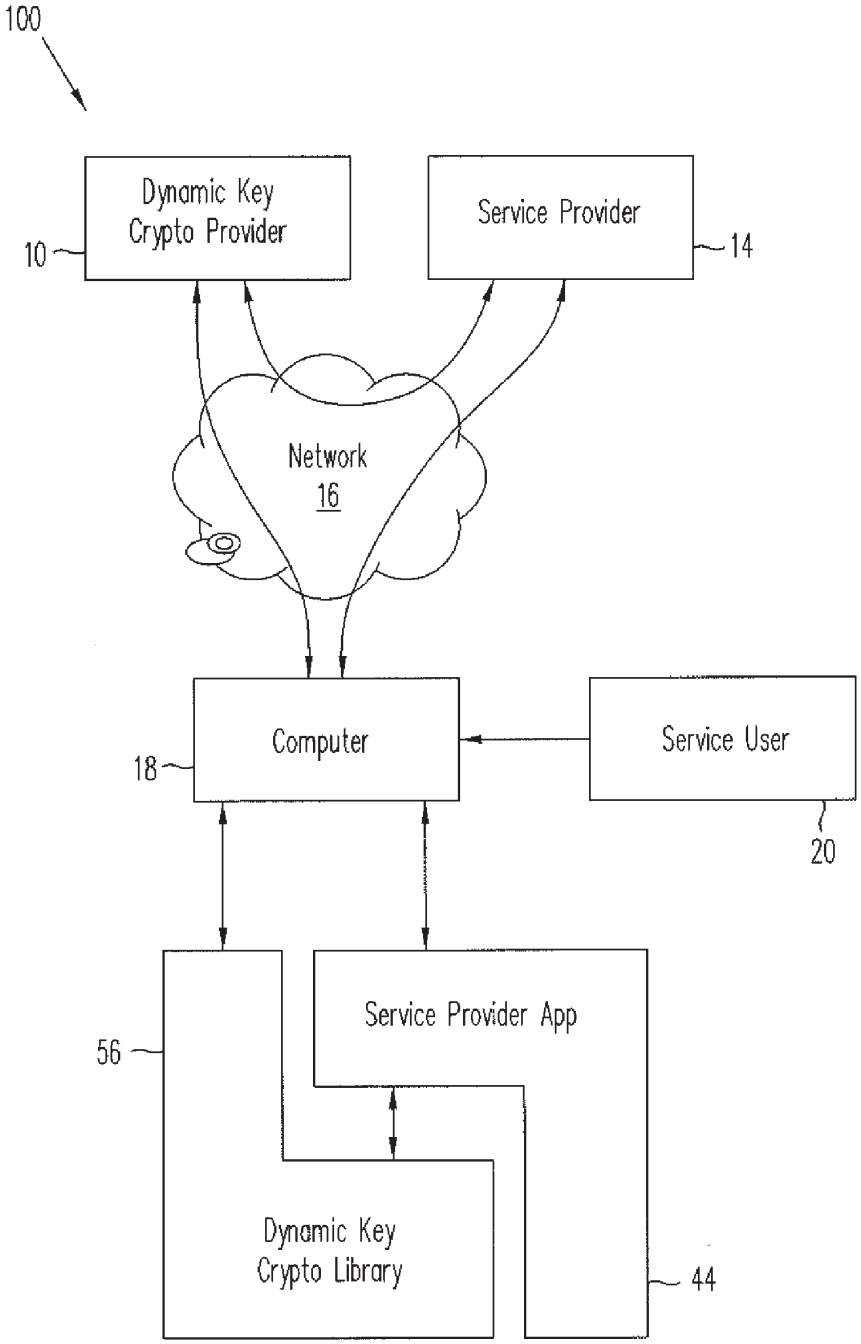
100
Dynamic Key
Crypto Provider
10
Service Provider
14
Network
16
Computer
18
Service User
20
Service Provider App
56
Dynamic Key
Crypto Library
44

FIG. 1

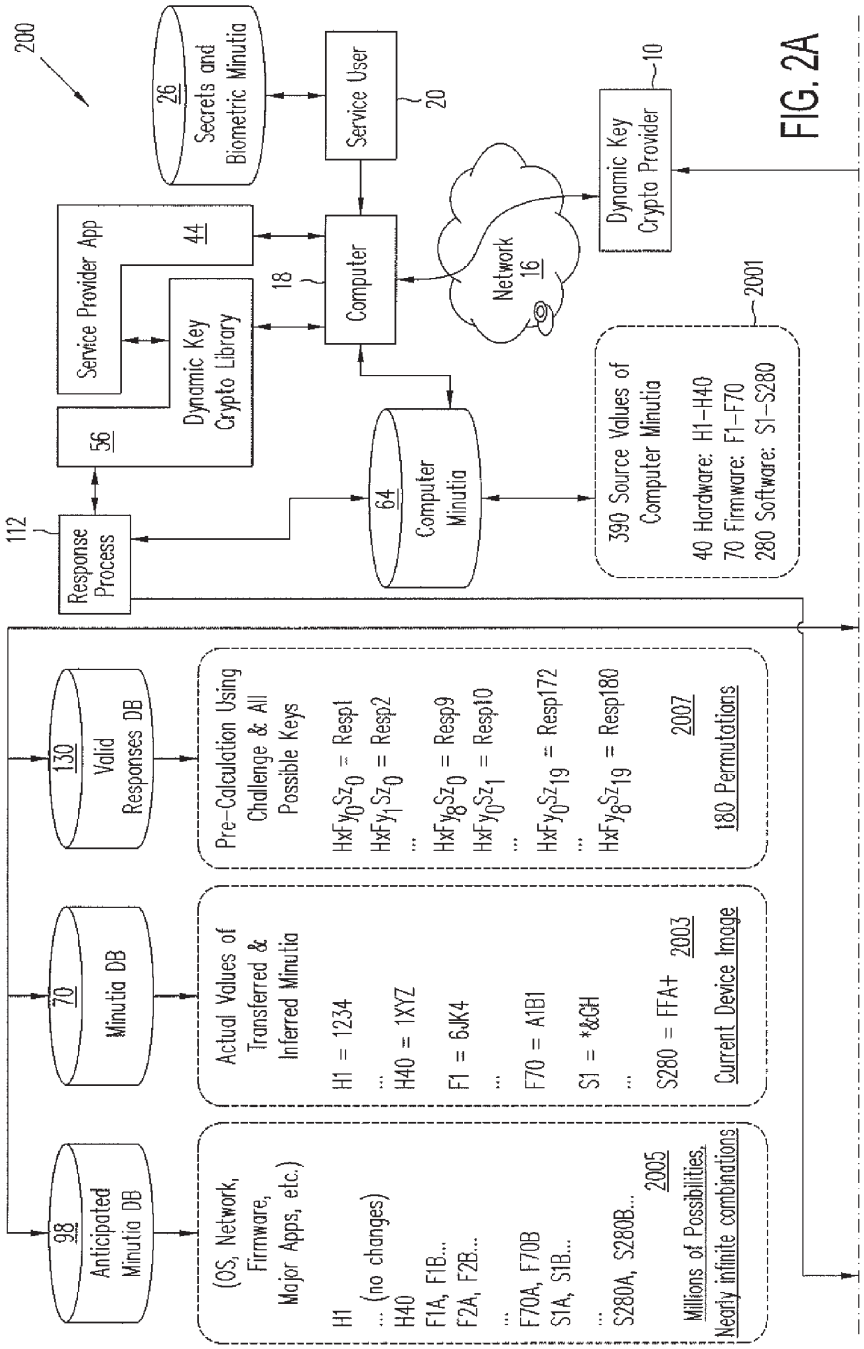
200
26
Secrets and Biometric Minutia
Service User
20
Service Provider App
44
Dynamic Key Crypto Library
56
18
Computer
Network
16
Dynamic Key Crypto Provider
10
112
Response Process
64
Computer Minutia
390 Source Values of Computer Minutia
40 Hardware: H1–H40
70 Firmware: F1–F70
280 Software: S1–S280
2001
98
Anticipated Minutia DB
(OS, Network, Firmware, Major Apps, etc.)
H1
... (no changes)
H40
F1A, F1B...
F2A, F2B...
...
F70A, F70B
S1A, S1B...
...
S280A, S280B...
2005
Millions of Possibilities, Nearly infinite combinations
70
Minutia DB
Actual Values of Transferred & Inferred Minutia
H1 = 1234
...
H40 = 1XYZ
F1 = 6JK4
...
F70 = A1B1
S1 = *&GH
...
S280 = FFA+
2003
Current Device Image
130
Valid Responses DB
Pre-Calculation Using Challenge & All Possible Keys
$HxFy_0Sz_0$ = Resp1
$HxFy_1Sz_0$ = Resp2
...
$HxFy_8Sz_0$ = Resp9
$HxFy_0Sz_1$ = Resp10
...
$HxFy_0Sz_{19}$ = Resp172
...
$HxFy_8Sz_{19}$ = Resp180
2007
180 Permutations

FIG. 2A

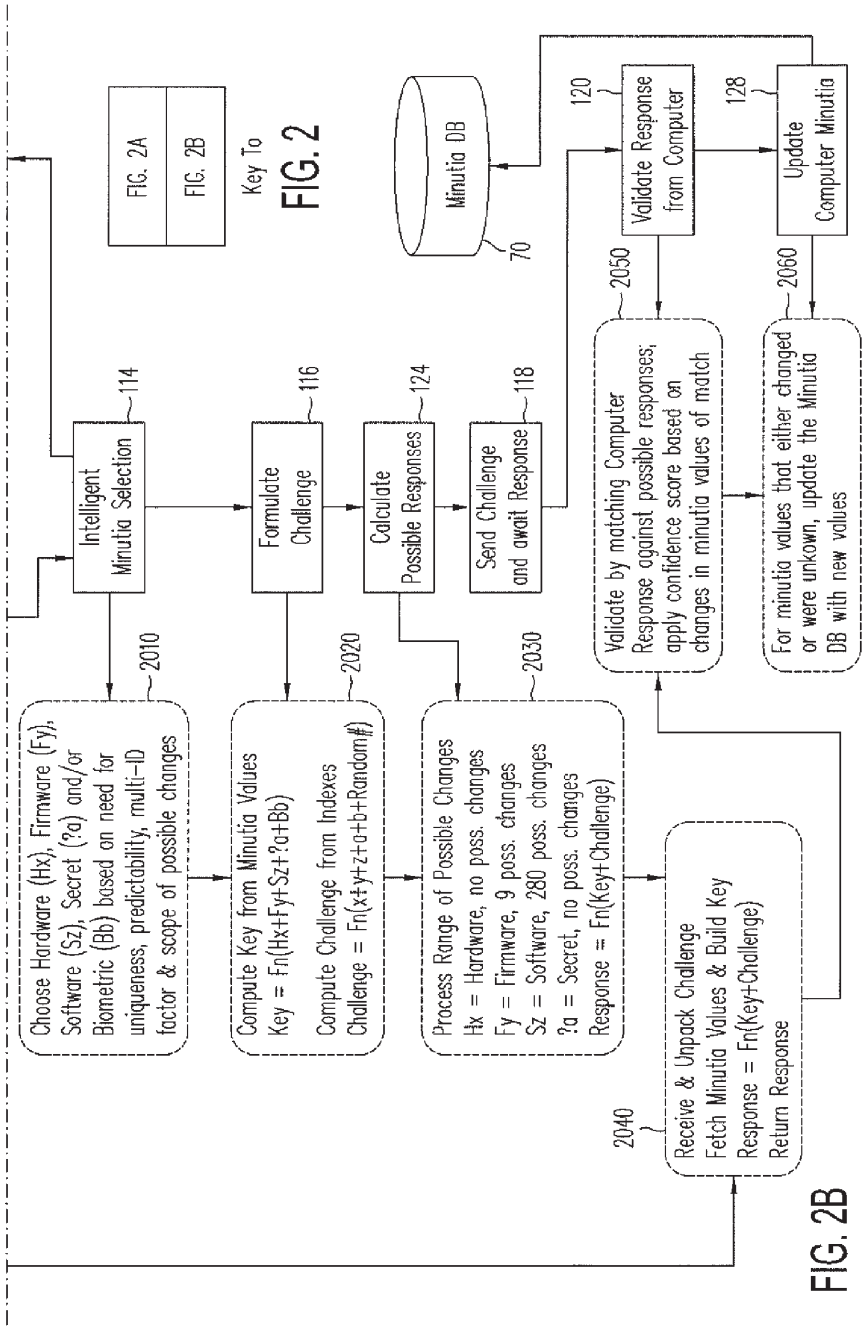
Intelligent Minutia Selection
114
Formulate Challenge
116
Calculate Possible Responses
124
Send Challenge and await Response
118
Validate Response from Computer
120
Update Computer Minutia
128
Minutia DB
70
FIG. 2A
FIG. 2B
Key To
FIG. 2
Choose Hardware (Hx), Firmware (Fy), Software (Sz), Secret (?a) and/or Biometric (Bb) based on need for uniqueness, predictability, multi-ID factor & scope of possible changes
2010
Compute Key from Minutia Values
Key = Fn(Hx+Fy+Sz+?a+Bb)
Compute Challenge from Indexes
Challenge = Fn(x+y+z+a+b+Random#)
2020
Process Range of Possible Changes
Hx = Hardware, no poss. changes
Fy = Firmware, 9 poss. changes
Sz = Software, 280 poss. changes
?a = Secret, no poss. changes
Response = Fn(Key+Challenge)
2030
Validate by matching Computer Response against possible responses; apply confidence score based on changes in minutia values of match
2050
For minutia values that either changed or were unkown, update the Minutia DB with new values
2060
Receive & Unpack Challenge
Fetch Minutia Values & Build Key
Response = Fn(Key+Challenge)
Return Response
2040

FIG. 2B

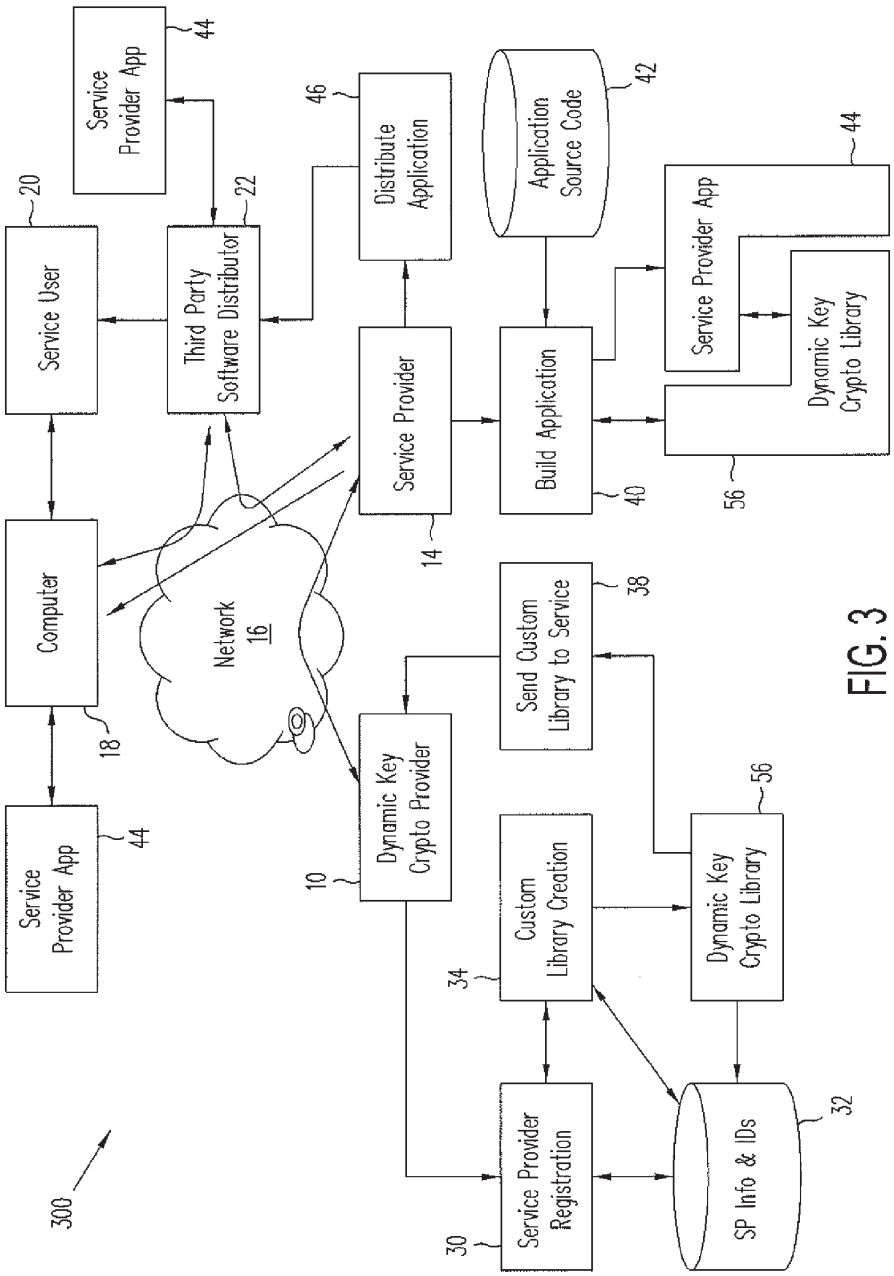
Service Provider App
44
Service User
20
Third Party Software Distributor
22
Distribute Application
46
Application Source Code
42
Service Provider App
44
Dynamic Key Crypto Library
56
Computer
18
Network 16
Service Provider
14
Build Application
40
Send Custom Library to Service
38
Service Provider App
44
Dynamic Key Crypto Provider
10
Custom Library Creation
34
Dynamic Key Crypto Library
56
Service Provider Registration
30
SP Info & IDs
32
300

FIG. 3

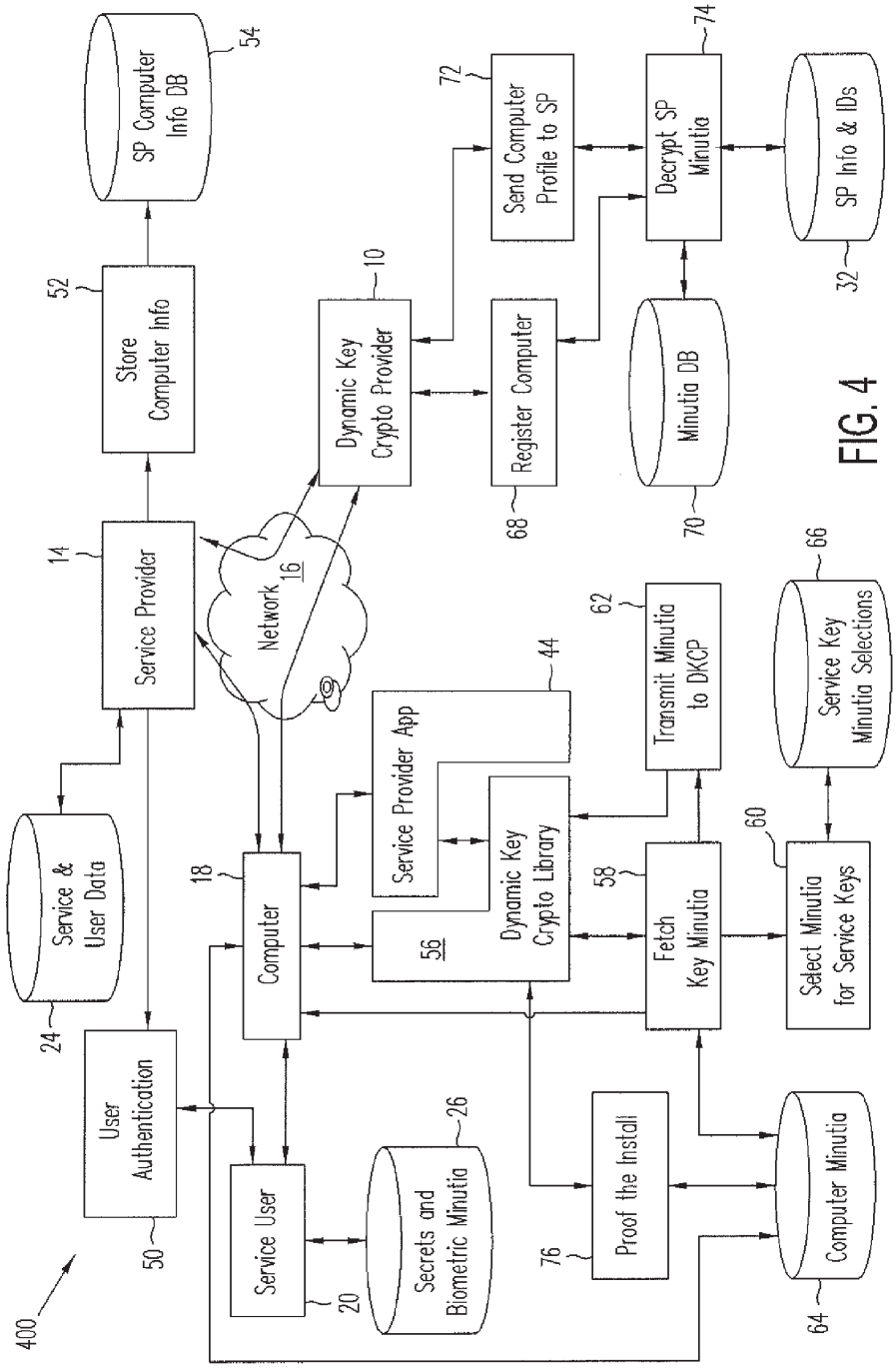
400
SP Computer Info DB
54
Store Computer Info
52
Service Provider
14
Service & User Data
24
User Authentication
50
Service User
20
Secrets and Biometric Minutia
26
Computer
18
Network
16
Dynamic Key Crypto Provider
10
Send Computer Profile to SP
72
Register Computer
68
Decrypt SP Minutia
74
Minutia DB
70
SP Info & IDs
32
Service Provider App
44
Dynamic Key Crypto Library
56
Transmit Minutia to DKCP
62
Fetch Key Minutia
58
Proof the Install
76
Service Key Minutia Selections
66
Select Minutia for Service Keys
60
Computer Minutia
64

FIG. 4

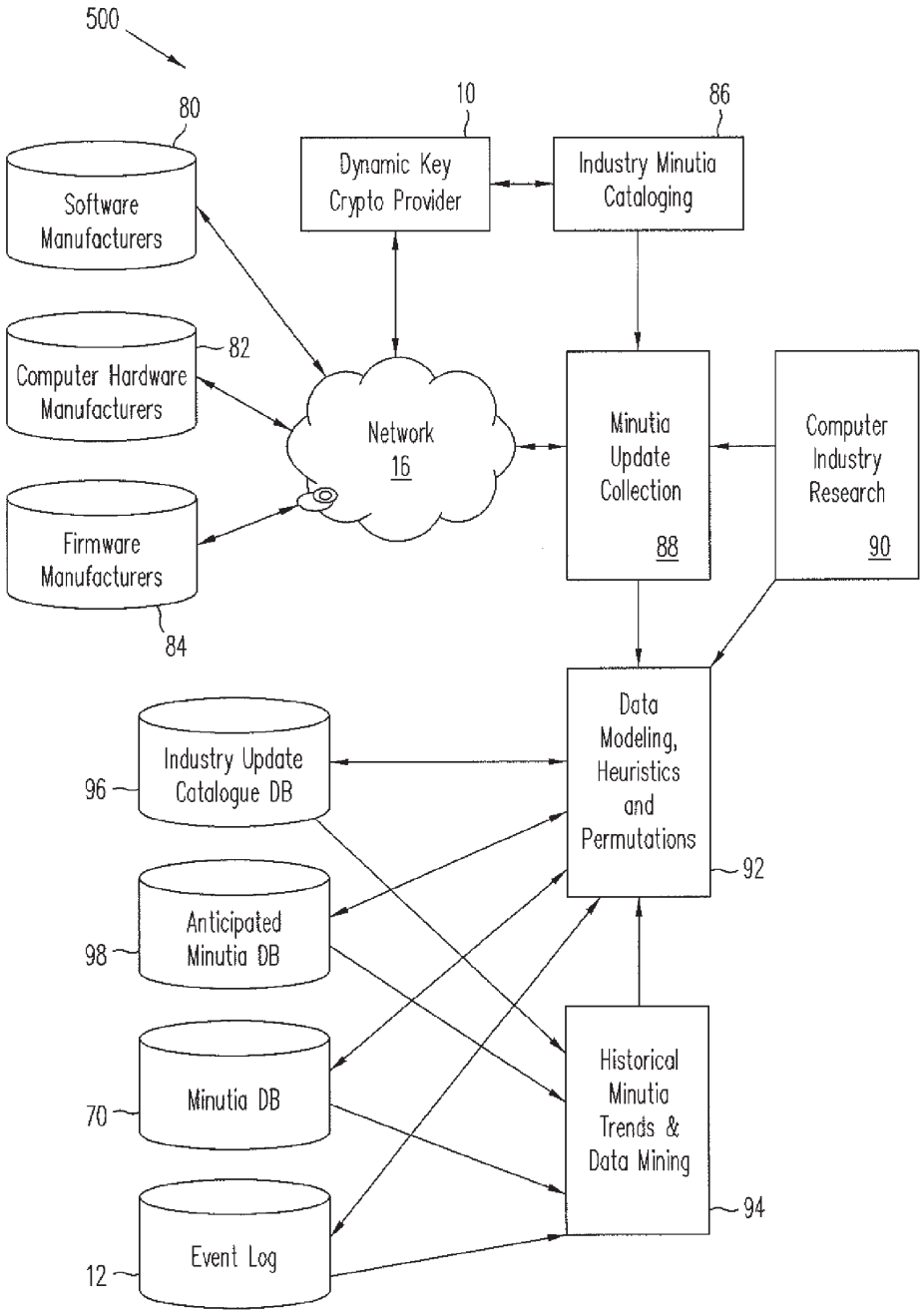
500
80
Software Manufacturers
10
Dynamic Key Crypto Provider
86
Industry Minutia Cataloging
82
Computer Hardware Manufacturers
Network 16
Minutia Update Collection 88
Computer Industry Research 90
Firmware Manufacturers
84
Data Modeling, Heuristics and Permutations
92
96
Industry Update Catalogue DB
98
Anticipated Minutia DB
70
Minutia DB
12
Event Log
Historical Minutia Trends & Data Mining
94

FIG. 5

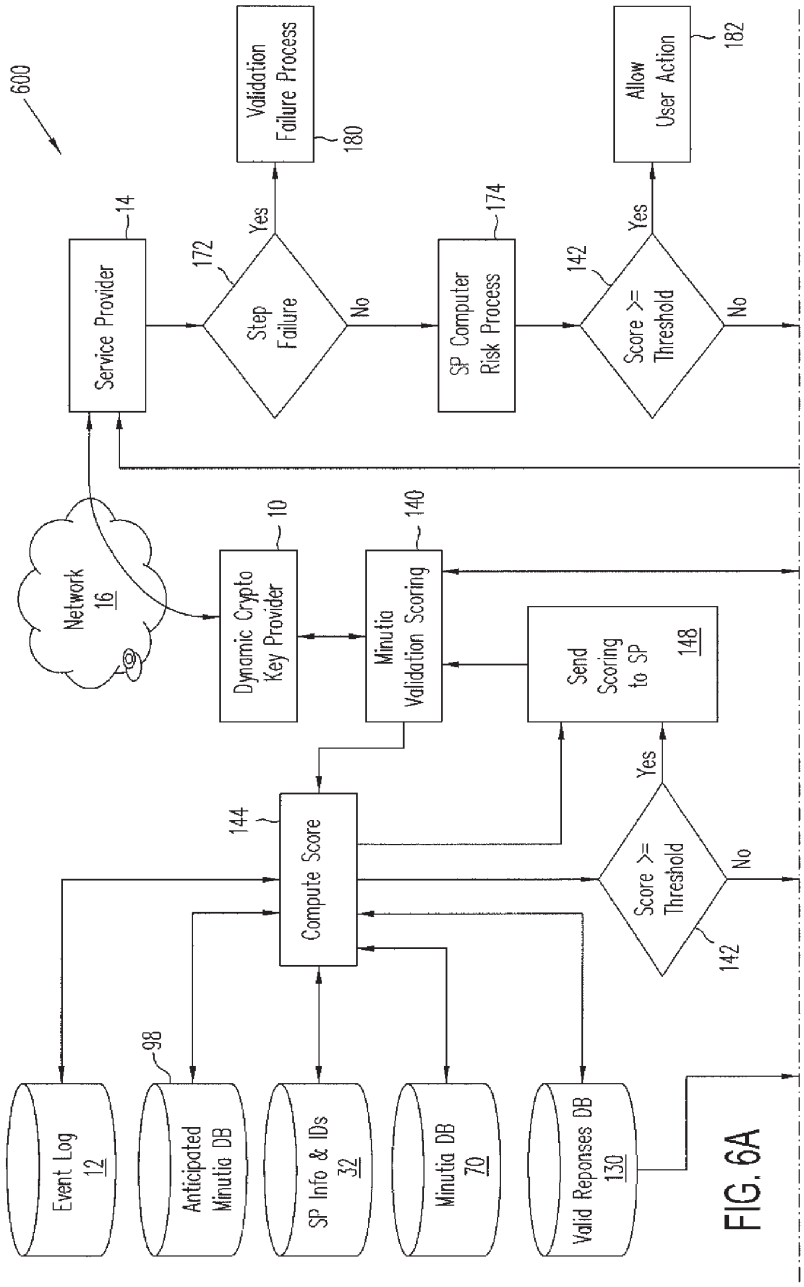
600
Service Provider
14
Step Failure
172
Yes
No
Validation Failure Process
180
SP Computer Risk Process
174
Score >= Threshold
142
Yes
No
Allow User Action
182
Network 16
Dynamic Crypto Key Provider
10
Minutia Validation Scoring
140
Send Scoring to SP
148
Compute Score
144
Score >= Threshold
142
Yes
No
Event Log 12
Anticipated Minutia DB
98
SP Info & IDs 32
Minutia DB 70
Valid Reponses DB 130

FIG. 6A

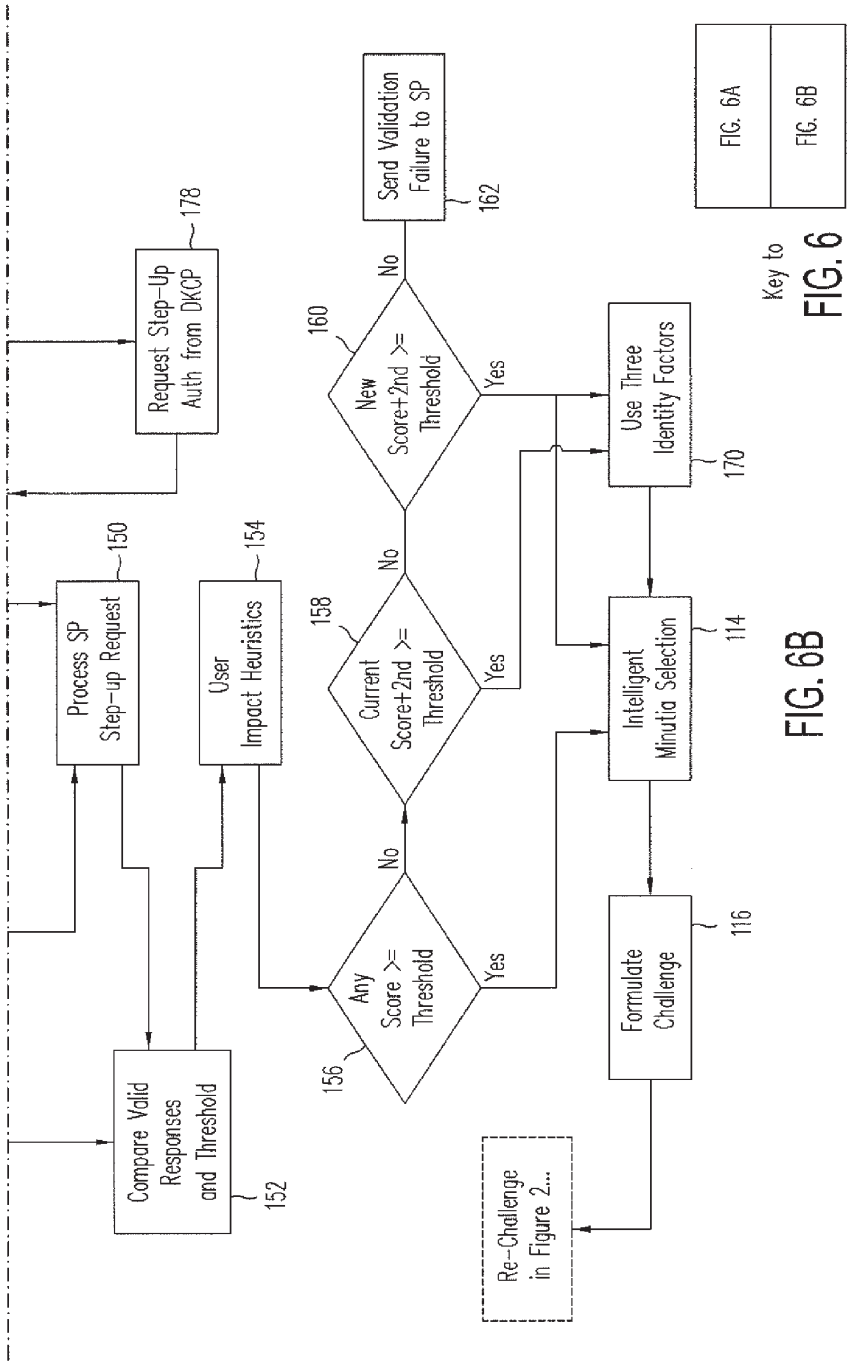
Process SP Step-up Request
150
Compare Valid Responses and Threshold
152
User Impact Heuristics
154
Any Score >= Threshold
156
Current Score+2nd >= Threshold
158
New Score+2nd >= Threshold
160
Send Validation Failure to SP
162
Request Step-Up Auth from DKCP
178
Use Three Identity Factors
170
Intelligent Minutia Selection
114
Formulate Challenge
116
Re-Challenge in Figure 2...
Yes
No
FIG. 6A
FIG. 6B
Key to FIG. 6

FIG. 6B

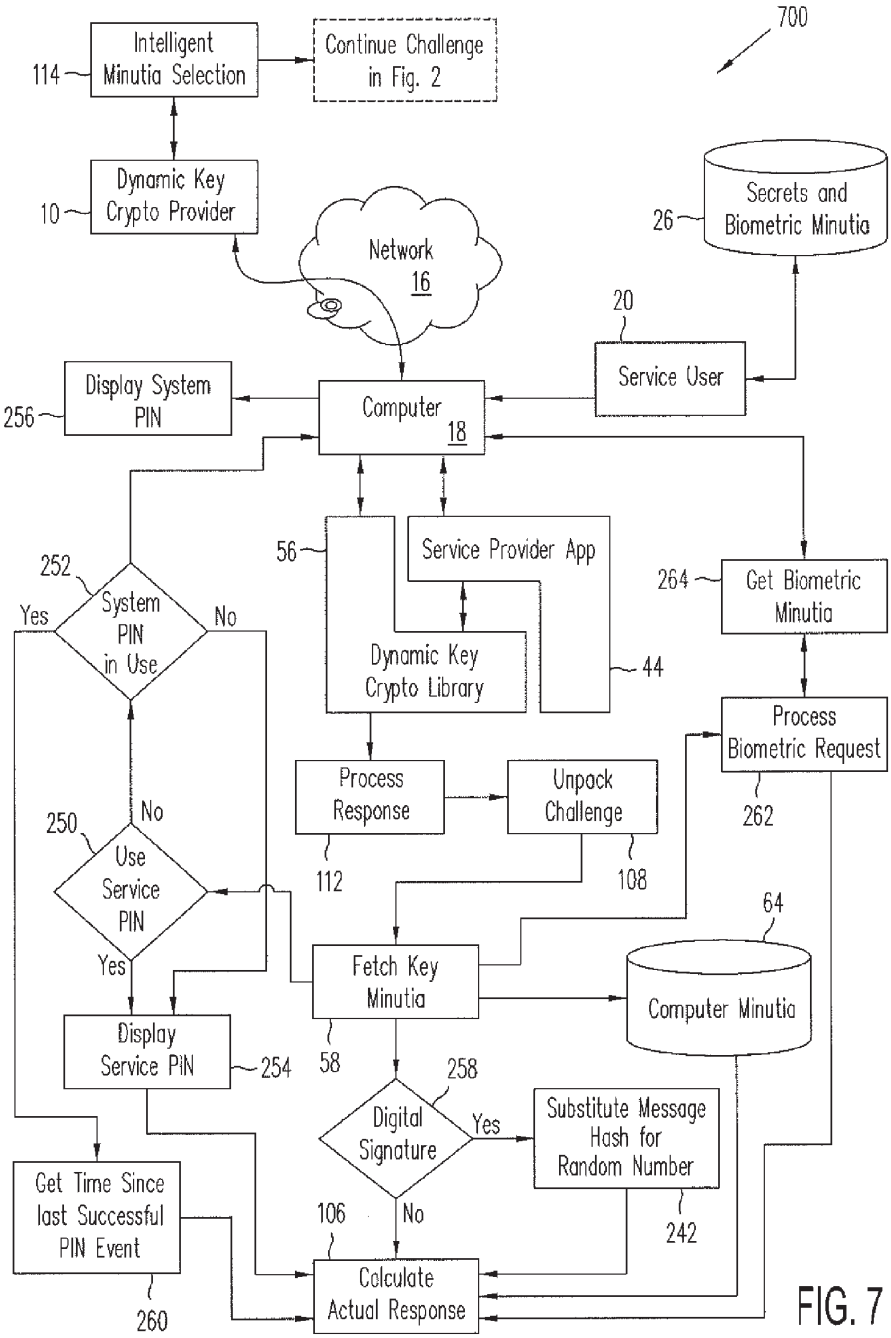
700
114
Intelligent Minutia Selection
Continue Challenge in Fig. 2
10
Dynamic Key Crypto Provider
Network 16
26
Secrets and Biometric Minutia
20
Service User
256
Display System PIN
Computer 18
56
Service Provider App
Dynamic Key Crypto Library
44
264
Get Biometric Minutia
252
System PIN in Use
Yes
No
Process Biometric Request
262
Process Response
112
Unpack Challenge
108
250
Use Service PIN
No
Yes
64
Fetch Key Minutia
58
Computer Minutia
Display Service PIN
254
258
Digital Signature
Yes
No
Substitute Message Hash for Random Number
242
Get Time Since last Successful PIN Event
260
106
Calculate Actual Response

FIG. 7

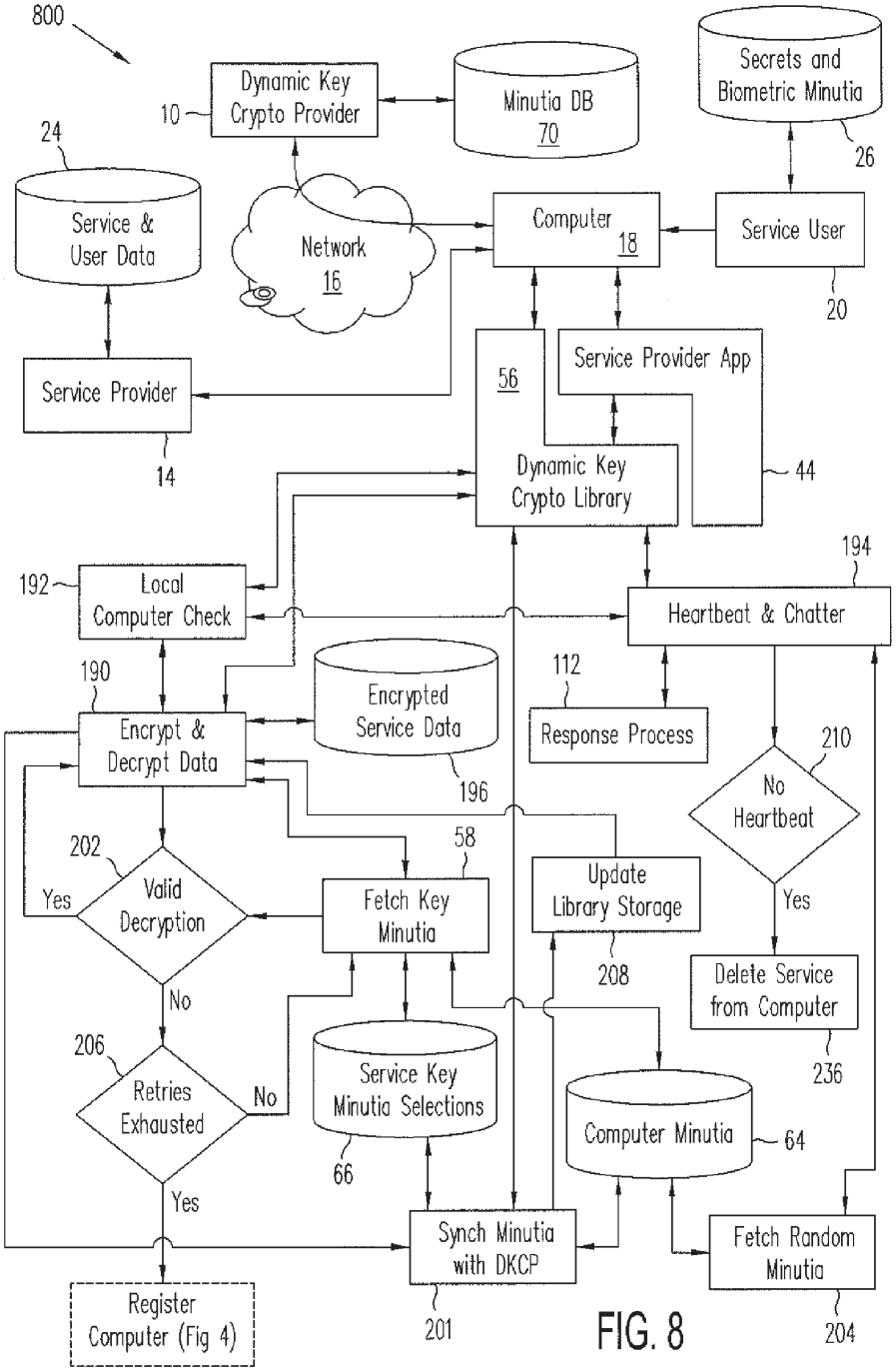
800
Dynamic Key Crypto Provider
10
Minutia DB 70
Secrets and Biometric Minutia
26
24
Service & User Data
Network 16
Computer 18
Service User
20
Service Provider
14
56
Service Provider App
Dynamic Key Crypto Library
44
192
Local Computer Check
194
Heartbeat & Chatter
190
Encrypt & Decrypt Data
Encrypted Service Data
196
112
Response Process
210
No Heartbeat
Yes
202
Valid Decryption
Yes
No
58
Fetch Key Minutia
Update Library Storage
208
Delete Service from Computer
236
206
Retries Exhausted
No
Yes
Service Key Minutia Selections
66
Computer Minutia
64
Synch Minutia with DKCP
201
Fetch Random Minutia
204
Register Computer (Fig 4)

FIG. 8

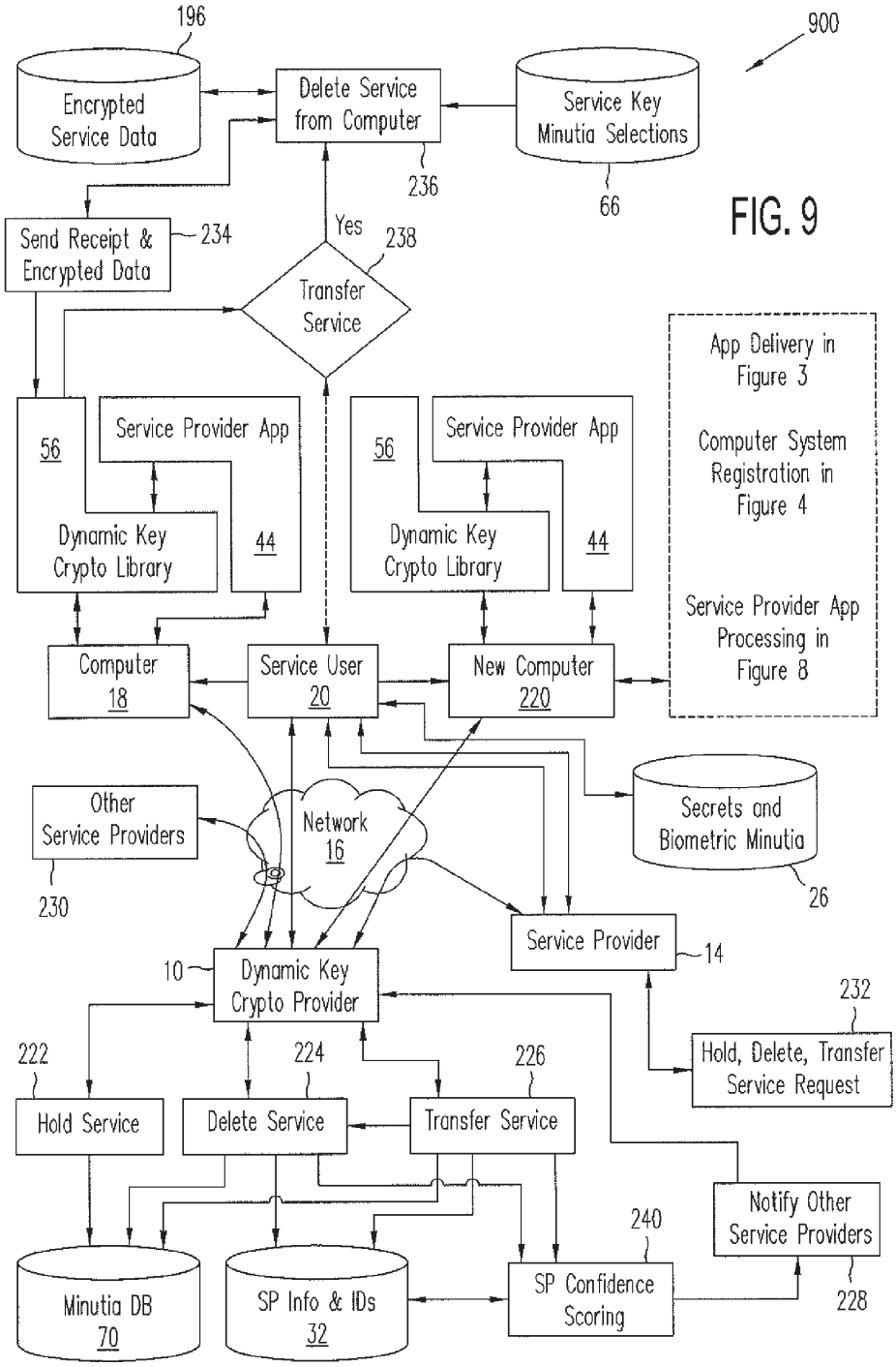
196
900
Encrypted Service Data
Delete Service from Computer
Service Key Minutia Selections
236
66
FIG. 9
Send Receipt & Encrypted Data
234
Yes
238
Transfer Service
App Delivery in Figure 3
Computer System Registration in Figure 4
Service Provider App Processing in Figure 8
56
Service Provider App
Dynamic Key Crypto Library
44
56
Service Provider App
Dynamic Key Crypto Library
44
Computer 18
Service User 20
New Computer 220
Other Service Providers
230
Network 16
Secrets and Biometric Minutia
26
Service Provider
14
10
Dynamic Key Crypto Provider
232
Hold, Delete, Transfer Service Request
222
224
226
Hold Service
Delete Service
Transfer Service
Notify Other Service Providers
240
228
Minutia DB 70
SP Info & IDs 32
SP Confidence Scoring

CRYPTOGRAPHIC SECURITY FUNCTIONS BASED ON ANTICIPATED CHANGES IN DYNAMIC MINUTIAE

CROSS REFERENCE TO RELATED APPLICATIONS

[0001] This application claims the benefit of U.S. Provisional Patent Application No. 61/462,474 filed Feb. 3, 2011, which is incorporated by reference.

BACKGROUND

[0002] 1. Technical Field

[0003] The present disclosure generally relates to dynamic key cryptography used, for example, for authentication between a client electronic device and a service provider, encryption of data communications, and digital signatures and, more particularly, to cryptography using dynamic keys derived from dynamically changing key material.

[0004] 2. Related Art

[0005] Use of computers for connecting to a network (such as the Internet) and communicating with a variety of services risks the privacy of many types of information belonging to a user including, for example, the user's relationships (e.g., social connections), business secrets, banking details, payment options, and health records. The use of cryptography is common to authenticate identities, protect data, and digitally sign the summary (i.e. digest) of an action.

[0006] Cryptography generally uses an algorithm (e.g., Advanced Encryption Standard (AES), Rivest Shamir Adelman (RSA)) to combine cryptographic keys (which may be symmetric, public, or private, for example) with plain text to form cipher text. Cryptography keys are typically random numbers without any special meaning. The process of distributing cryptographic keys and storing them on a client computer (referred to as "key management") is difficult to perform securely and is often the point-of-attack for breaking the security of a cryptographic system. The key represents a single sequence of data and thus a single point-of-failure for the cryptographic system. Since the key normally must be present at the client computer, finding the key and then copying it to another computer can allow an imposter entity to masquerade as a valid entity.

[0007] Secure elements (e.g., smartcards) can securely store the cryptographic key and, in some instances, generate the key in a secure environment. Access to the key was typically controlled by requiring the user to enter a personal identification number (PIN); this ensured that the user had to provide a secret before the secure element would allow use of the key. Such access to a key is commonly known as two-factor authentication, and the two factors are generally referred to as: "Something You Know" and "Something You Have". A third factor, "Something You Are", can include, for example, biometric information. The factors themselves are related in use but entirely separate in material. Possession of the physical secure element ("Something You Have") may be via validation of cryptographic functions using the random number cryptographic key provisioned to a particular secure element whose use may be protected by a secret PIN ("Something You Know"). There is no implicit binding between the key and the user.

[0008] The use of certificates in cryptography enabled the binding of a distinguished name (e.g., a unique user) with a cryptographic key. Yet, still the cryptographic key is a random number, and when the key is validated, the cryptographic system attributes the user in the certificate to the usage of the key; the key matter itself has no relation to the user.

[0009] On the Internet, ensuring a real-world identity for the user is critical for protecting data and privacy. Mobile users especially are at risk because they often do not use anti-virus applications and many of the service providers use applications (apps) optimized for simplicity, not security. This leaves much of the private data meaningful to both a user's identity and a service's value inadequately protected. Since online service providers (OSP) incur much of the risk, safety has become their responsibility.

[0010] The standard method for identifying a user to an online service is by entering a username and password. The username is a known service index and, as such, can be stored on the computer for convenience. The password is a user secret verifiable by the OSP; it should not be stored at the computer, where it can be compromised. However, because a quality password has many characters which should be a mix of upper, lower, punctuation and special characters, the password is often difficult and time-consuming to type. This is especially true on a mobile computer using touch keypads that have various 'levels' of keypads for characters beyond simple alpha-numeric. Thus, many mobile apps store the password on the computer. Because mobile operating systems require mobile apps to be signed in order to run, the apps themselves cannot be altered after installation. So, any data stored by the mobile app is separate from the mobile app and often can be vulnerable to attack. Furthermore, because the app cannot change, if encryption was used to protect the cached password, there could only be one encryption key for all instances of the application. This commonality made harvesting and cracking stored passwords on a mobile computer relatively simple, even if the passwords were encrypted, since they all used the same key for decryption.

[0011] Computer and computer identification has been attempted by calculating a hash of the minutia found on a computer to uniquely identify the computer, often referred to as a computer fingerprint. Computer fingerprints typically are used, among other things, to 'lock' software to a particular computer fingerprint and identify computers used in online actions to profile the history and potential risk of particular actions. A typical computer identifier is computed and remains static; to ensure reliability the computer fingerprint typically uses computer minutiae (e.g., serial numbers) that normally do not change. Thus, current computer fingerprints typically use a relatively small set of static minutia which may be prone to spoofing. Some approaches to improving computer identification have sought to increase the number of minutiae used in identifying the computer through the analysis of time (both in clock and network latency) and bits of information left on the computer (i.e. 'cookies'). However, as more minutiae are included in the computation, the probability that changes occurred naturally to the minutia can result in a new computer fingerprint. This falsely identifies a computer as 'different' when it is actually the same computer (often referred to as 'false negatives'). These changes to the minutia on a unique computer occur naturally during normal use and can invalidate the computer fingerprint process or inconvenience the user or service by forcing a re-initialization of the computer fingerprint.

SUMMARY

[0012] According to one or more embodiments of the present invention, methods and systems for dynamic key

cryptography use a wide range of minutiae as key material including computer hardware, firmware, software, user secrets, and user biometrics rather than store a random number as a cryptographic key on the computer. Methods and systems for using dynamic key cryptography, according to one or more embodiments, can be used for authenticating users to services, ciphering data for protection, and digitally signing message digests. In one embodiment, dynamic key cryptography anticipates changes to computers caused by industry updates to hardware, firmware, and software of computers.

[0013] In one embodiment, a method of dynamic key cryptography includes: selecting a subset from a set of minutia types; for a particular device, sending a challenge to the device, in which: the challenge includes information from which the device can collect actual values of minutia corresponding to the selected subset of minutia types in order to form a cryptographic key, the cryptographic key is never transmitted from the device across any communication channel, and the cryptographic key is used to encrypt an actual response to the challenge; pre-processing a set of responses to the challenge based on tracking updates of minutia from which the selected subset of minutia types is selected, in which: the set of pre-processed responses covers a range of all actual responses possible to be received from the particular device if the combination of the particular device with collected actual values of minutia is valid; comparing the actual response from the particular device to the set of pre-processed responses; and validating the combination of the particular device with the collected actual values if the actual response is included in the set of pre-processed responses for the particular device.

[0014] In another embodiment, a method includes: selecting at least one type of minutia from a plurality of minutia types; forming a challenge that conveys the selection of minutia types; computing a plurality of pre-processed responses possible to receive from a valid device, in which: each pre-processed response is computed using a key, each key is computed using values that are possible for the selection of minutia types; sending the challenge to the device; receiving an actual response to the challenge from the device, in which: the actual response is computed using an actual key, the actual key is computed using: a deduction of the selection of minutia types from the challenge and actual values of the selection of minutia types; comparing the actual response to the pre-processed responses for a match; and based on whether or not a match was found, validating the combination of the device with the actual values of the selection of minutia types.

[0015] In still another embodiment, a system includes a server configured to communicate with a device, in which the server selects at least one type of minutia from a plurality of minutia types; the server forms a challenge that conveys the selection of minutia types; the server computes a plurality of pre-processed responses possible to receive from a valid device, in which: each pre-processed response is computed using a key, each key is computed using values that are possible for the selection of minutia types; the server sends the challenge to the device; the server receives an actual response to the challenge from the device, in which: the actual response is computed using an actual key; the actual key is computed using: a deduction of the selection of minutia types from the challenge and actual values of the selection of minutia types; the server compares the actual response to the pre-processed responses for a match; and based on whether or not a match was found, the server validates the combination of the device with the actual values of the selection of minutia types.

[0016] In yet another embodiment, a computer program product includes a non-transitory computer readable medium having computer readable and executable code for instructing a processor to perform a method, the method including: selecting at least one type of minutia from a plurality of minutia types; forming a challenge that conveys the selection of minutia types; computing a plurality of pre-processed responses possible to receive from a valid device, in which: each pre-processed response is computed using a key and each key is computed using values that are possible for the selection of minutia types; sending the challenge to the device; receiving an actual response to the challenge from the device, in which: the actual response is computed using an actual key, the actual key is computed using: a deduction of the selection of minutia types from the challenge and actual values of the selection of minutia types; comparing the actual response to the pre-processed responses for a match; and based on whether or not a match was found, validating the combination of the device with the actual values of the selection of minutia types.

BRIEF DESCRIPTION OF THE DRAWINGS

[0017] FIG. **1** is a system diagram illustrating communication and security between a client, a client device and a service provider facilitated by a dynamic key cryptography provider in accordance with one or more embodiments;

[0018] FIG. **2** is a system diagram illustrating a challenge, response and validation process performed by the system of FIG. **1** in accordance with an embodiment;

[0019] FIG. **3** is a system diagram illustrating a service provider application (app) delivery system in accordance with an embodiment;

[0020] FIG. **4** is a system process flow diagram illustrating a system for registration of computer system and user minutiae and services in accordance with an embodiment;

[0021] FIG. **5** is a system diagram illustrating a system to catalogue and model industry minutia and user heuristics to create and update anticipated minutia databases in accordance with an embodiment;

[0022] FIG. **6** is a system process flow diagram illustrating a system for validation scoring, confidence rating and step-up authentication processing in accordance with an embodiment;

[0023] FIG. **7** is a system process flow diagram for an authentication and digital signature system capable of incorporating three identity factors in accordance with an embodiment;

[0024] FIG. **8** is a system process flow diagram illustrating a system for application processing for local and update data security functions in accordance with an embodiment; and

[0025] FIG. **9** is a system diagram illustrating computer identity provider lifecycle functionality and services to service providers in accordance with an embodiment.

DETAILED DESCRIPTION

[0026] In accordance with embodiments of the present invention, methods and systems of dynamic key cryptography using dynamically changing keys composed of or derived from dynamically changing key material provide cryptographic services such as authentication, data protection, and digital signature by uniquely identifying a user's computer or

other electronic device based on (1) the electronic device itself, e.g., a mobile phone or personal computing device, and using a very wide range of hardware, firmware, and software minutia found on the computer; (2) secrets a user of the computer knows; and (3) biometric information the computer might collect from the user. Dynamic key cryptography in accordance with one or more embodiments enables secured actions for users of electronic computers and, more particularly, provides authentication between a client electronic computer and a service provider, encryption of data electronically stored or sent on a communication channel, and digital signature for electronic digests of actions performed by the user on an electronic computer.

[0027] The dynamic key cryptography system according to one embodiment anticipates changes to the minutia caused by updates and natural usage of the computer and practically eliminates false negatives that block valid users from a network service. Dynamic key cryptography may provide a safe, reliable method to users of network services for authenticating the user to network services that protects both the user and the network services, protects the integrity and privacy of data, and provides for digitally signing the digest of an action performed by the user on the electronic computer.

[0028] One or more embodiments may provide features such as: 1) simple user experience—no difficult passwords to remember or type, the user device or computer is invisibly authenticated and the user can be asked to enter a second identity factor such as a secret PIN or biometric (e.g., voiceprint) into the computer only if required by the service and protected services can be automatically reconnected to a new device or computer when it is registered by the user; 2) unprecedented security—using a wider range of hardware, firmware, software, secret and biometric minutia to deliver a very accurate device or computer and user identity that is more difficult to spoof, especially as some computer identifier values are not static but are expected to change; 3) reliability anticipating changes to the user device or computer delivers a tolerant, yet secure authentication with fewer false negatives that anger users and clog customer support services; and 4) service and data separation—delivered as an integrated part of a mobile application (app), a "foundation" (e.g., dynamic key cryptographic service) helps protect the app, encrypt service data stored on the user device or computer, digitally sign actions and allows the service to react without affecting other services, e.g., should data need to be wiped, only the app's data is affected, not the user's other information such as the user's pictures or messages.

[0029] One or more embodiments may enable a more convenient method for connecting the user and service. For example, instead of subscribers typing in cumbersome passwords (or worse yet, storing them unencrypted on the computer), the dynamic key cryptographic (dynamic key crypto) service and related client software can compute and manage the unique properties of the user device or computer. The resultant identified computer can be used in place of passwords to simplify the customer connection experience. Since the computer itself is uniquely identified, it represents a safer method of identifying customers (e.g., users or subscribers). By forming cryptographic keys which use minutia found on the computer, the computer itself (as defined by its minutia) is validated, not a static key stored or intended to be stored only on the computer. The discovery and copying of a single value (the secret key) is significantly easier than the discovery and copying of a very large range of computer minutia values. In addition, the writing of a single key in a computer's memory effectively counterfeits the uniqueness of a computer identified by a single, static stored value. To counterfeit a dynamic key crypto-identified computer, it would be necessary to intercept various methods to learn the minutiae values of the computer. Several direct and related methods may exist for learning the value of a particular computer minutia; to effectively counterfeit the computer, it may be that all methods for accessing all computer minutia values would need to be intercepted and the fraudulent response returned. Furthermore, since the dynamic key crypto system expects certain computer minutia values to change, a successfully counterfeited computer would also need to ensure the fraudulent computer minutia values change in an expected manner. Should a user's online activities require an even higher level of trust, the platform (e.g., dynamic key crypto service and related client software) can force the user to enter the user's standard PIN into the computer to ensure a valid user is the person using the computer.

[0030] Several technologies exist for processing security and assurance claims using static values. These include passwords themselves and static 'seed keys' for functions like one-time-password and challenge-respond security mechanisms. Even public key cryptography is based off a static key pair (public and private). One or more embodiments of the dynamic key crypto system may use a very large numeric representation (e.g., 100,000's of bits) of computer and user minutia (e.g., any piece of information that can be definitively associated with the computer and its user, including information from the general categories of what the user or computing device has, what the user knows, and what the user is) to form cryptographic keys that support a range of security functions in a verifiable manner (a cornerstone of security). In one or more embodiments methods based on the predictable dynamic nature of the minutia may allow for verification of the minutia (as if they were a single static value) but not all of the minutia is required to be static; most values of the minutia can (and are expected to) change and evolve over time and the change of the minutia values themselves increases the perceived randomness of the resultant dynamic crypto keys. The validation of dynamic key cryptography based on changing minutia uses a complex confidence scoring which isolates and evaluates the minutiae that have changed and uses confidence weightings against the predictability of such changes. Changing minutia when used as dynamic key material for dynamic key cryptography adds complexity to the cryptographic system which can improve security as a one-time copy of the minutia values or resultant key will likely fail later in time as the minutia values are expected to change.

[0031] Layering static minutia (e.g., hardware minutia, user secrets, some user biometrics), slow-changing minutia (e.g., firmware minutia, some user biometrics), and predictably changing minutia (e.g., software minutia) can create a very large set of key material (or keyspace) which can be processed as subsets of minutia. These subsets of minutia function as static keys over a particular time interval and provide increased security while being fault-tolerant to normal and natural anomalies. Examples of categories of minutia include various hardware, firmware, software, user secrets, and user biometric values. For example, hardware minutia may include the make and model of the computing device (e.g., smart phone or pad), an international mobile equipment identification (IMEI) number of the computing device, or a circuit manufacturer's ID number which may be readable

from a circuit chip element of the computing device. Similarly, examples of firmware and software minutia may include which firmware and software codes are installed on the computing device and characteristics such as what particular version or release date of firmware or software are installed on the computing device. Other minutia may include such information as geo-location from GPS (global positioning system) capability of the computing device. In some embodiments, minutia may also include secrets a user of the computing device knows (e.g., a PIN number or password) or biometric information the computing device might collect from the user (e.g., a fingerprint, voiceprint, or retinal scan). In this manner, dynamic key cryptography can utilize minutia values from the three identity factors ("have", "know", and "are") to form a dynamic key so that dynamic key crypto purposes such as authentication, data protection, and digital signature can benefit from the three identity factors simultaneously.

[0032] Dynamic key cryptography key matter is a significant improvement over static cryptographic keys of simply random numbers (as nearly all prior art cryptography uses). Dynamic key crypto keys are permutations of a very large collection of minutia values, many of which change over time; the result is a seemingly random number comprised of independently meaningful minutia values.

[0033] To achieve fault tolerance over a possibly changing set of minutia, anticipated changes to minutia and multiple subsets of minutia that provide back-up to any single subset can be used. By using mass produced electronic devices (e.g., mobile units and computers) which contain both a vast array of minutia and predictable evolution paths of minutia, a dynamic encryption system of methods based on evolving minutia can be maintained for the benefit of nearly any security function. In addition, since the range of minutia is so large, certain cryptographic functions can be performed several times using different subsets of minutia. In this manner, should one subset of minutia change, cryptographic checks using other minutia subsets and the anticipated changes to the minutia can improve fault tolerance and detection of spoofed minutia values.

[0034] Assertions regarding a computer's uniqueness, confidence in the computer's uniqueness, and service-orientated directives (e.g., provision, lock-hold, erase, transfer, blacklist) are formulated, controlled, and directed by the dynamic key crypto service. For example, computer dynamic key crypto libraries (installed on various user devices) gather the computer minutia values (e.g., from various user devices) and act on the computer (selected one of the various user devices) in response to dynamic key crypto service directives. The heuristics for the predictive and constantly changing minutia values are performed in the dynamic key crypto service using data forwarded by the dynamic key crypto libraries (from the various user devices) in addition to data gleaned from industry sources. Industry data includes cataloguing publically available data (such as over-the-air upgrades—including operating system (OS), firmware, and applications—and network updates) over the range of possible computers. While nearly infinitely larger than the changes that can occur to a single computer (lending security via a broader search space) the industry data is still finite and, therefore, useful in predictive heuristics regarding computers in use.

[0035] Various embodiments may provide systems and methods for secure dynamic key cryptography services including:

[0036] 1) Registering online service providers (OSP) with the dynamic key crypto service to create custom (for each OSP) computer dynamic key crypto libraries that conduct security functions but are resistant to successful attacks by other services and prohibit collaborating online service providers from profiling users.

[0037] 2) Collecting and registering the minutia values with the dynamic key crypto system, tying the minutiae to an online service provider account identifier.

[0038] 3) Gathering industry information regarding updates to computer hardware, firmware and software to create a catalogue of industry minutia values which may possibly appear on registered computers when they are updated. The catalogued industry minutia values are indexed and the possible minutia and current minutia are combined and permutations intelligently stored to anticipate future minutia possibilities.

[0039] 4) Identification based on a hash from a subset of minutia taken from a very wide range of minutia found or collected by the computer including hardware, firmware, software, user secrets, and user biometrics. The authentication can be performed as an intelligent challenge and response which indexes minutiae and, when compared to possible responses from anticipated minutiae, can ascertain minutia changes without having to actually exchange the minutiae between the computer and dynamic key crypto services.

[0040] 5) Scoring the confidence of a valid response based on the minutia used, the anticipated and expected changes to the minutia used including non-computer factors such as user PIN entry, geo-location, and biometrics. Different minutia can be intelligently chosen for the challenge to achieve a response that yields a higher confidence score, increased computer uniqueness, multiple identity factors, and particular minutia isolation.

[0041] 6) Protecting the application and data running on a computer by using the minutia in cryptographic functions such as encrypted memory, local identification, and heartbeat to prohibit application self-destruction. Some cryptographic functions are computed using more than one subset of minutia to allow back-up functionality should minutia used in the cryptographic function change. The high number of meaningful minutia enables a more complex interaction between the user the computer, and the software computing the identifier. The increased "chatter", a mix of meaningful and decoy reads of minutia, obscure which minutia is meaningful, and thereby increases the difficulty of spoofing minutia values and intercepting calls intended to counterfeit the original computer.

[0042] 7) Digitally signing a digest of an action performed by the user on the computer by ciphering the message digest with a key formed by minutia values which can include the three factors of identity ("have", "know", and "are", e.g., respectively, computer or device, user secret, user biometric information).

[0043] 8) Notifying a wide range of online service providers should a computer status change. This enables a single event to trigger responses from a wide range of registered online service providers so that security and service continuity are maintained.

[0044] 9) Forcing a user to enter a service PIN, computer PIN or biometric on a registered computer to include user minutia in the dynamic key cryptography function and ensure that a valid user is controlling an identified computer.

[0045] Some embodiments of systems and methods allow the calculation of one or more minutia value subsets to be based on a very wide possible range of minutia from various categories including hardware, firmware, software, user secrets, and user biometrics. One embodiment models predictive and anticipated changes that occur naturally and during the use of a computer or device. The larger considered ranges of minutia found on a computer or collected by a computer and the modeled dynamic nature of some minutiae enable a more robust and secure authentication system which is less prone to spoofing.

[0046] One embodiment uses a computer identity provider service to collect computer minutia information from the industry and uses this data to anticipate possible changes and permutations to minutiae on registered computers. By anticipating changes in minutiae found on the hardware, firmware, and software elements of a computer, embodiments are more fault-tolerant to natural changes in the computer. In this manner, embodiments can anticipate changes to minutiae and, through a challenge and response exchange between a computer and dynamic key crypto service, synchronize changes to minutiae without actually exchanging the minutiae between the computer and dynamic key crypto service.

[0047] Since nearly all security functions such as authentication, encryption, and digital signature are based on static keys and identifiers, embodiments of the present systems and methods also allow for the in-system back up of some cryptographic functions and secure transmission, synchronization, and updating of dynamically changing minutiae between the computer and the dynamic key crypto service. The dynamic key crypto service and computer enable the dynamically changing minutiae to be used in or used in place of traditionally static security functions including authentication, encryption, digital rights management, and data protection.

[0048] FIG. **1** illustrates a system **100** in which a service user **20** may communicate through a network **16** (e.g., the Internet, local area networks (wired and wireless), and personal networks (e.g., P2P, Bluetooth, near field communications (NFC)) using a computer **18** (e.g., a mobile phone, computer system, smart phones, laptops, tablets, sensors, payment terminals, and meters or any other communication capable electronic computer). The computer **18** (also referred to as "electronic device", "user device", or simply "device") may operate by executing an operating system (OS) that may enable execution on computer **18** of a dynamic key crypto library **56** and a service provider app **44**. Service provider app **44** may be provided by one or more of a number of various OSPs and may provide features specific to a particular service provider **14** that provides the service provider app **44** to the service user **20** and user computer **18**. As shown in FIG. **1**, service provider app **44** may interface with dynamic key crypto library **56**, and both service provider app **44** and dynamic key crypto library **56** may interface with computer **18** and its operating system. Service user **20** may communicate with service provider **14** over the network **16** using computer **18**, for example, using service provider app **44**. A service user **20** may be a person that can have several different types of computer **18** and may be a user of any number of service provider systems **14**. Likewise, a computer **18** may be used by more than one service user **20**, for example, family members sharing a smartphone or pad.

[0049] A dynamic key crypto provider **10** may provide various services and functions related to minutiae found on the computer **18** or minutiae collected by the computer **18** from the service user **20**. The dynamic key crypto provider **10** may be a web service capable of securely manipulating and analyzing large amounts of data such as performing calculations, data modeling, permutation processing, interpolation, internet searches and complex database functions. The dynamic key crypto provider **10** may be cloud-based so it can have sufficient computational speed and power to off-load intensive computational efforts from a sometimes resource-constrained computer **18**. The dynamic key crypto provider **10** may provide a secured processing environment for the processing in some embodiments including managing an enormous data-intensive query engine for complex data pattern matching, modeling and processing of complex and numerous permutations. As shown in FIG. **1**, dynamic key crypto library **56** may communicate with dynamic key crypto provider **10** and may also communicate with the service provider **14** through Network **16**. Dynamic key crypto provider **10** also may communicate with online service providers via network **16** and may communicate with the particular service provider **14** that provides the service provider app **44** to the service user **20** and user computer **18**. Service provider **14** may have a customer-vendor relationship, for example, with dynamic key crypto provider **10** in which service provider **14** is a customer receiving services from dynamic key crypto provider **10**. There can be any number of service provider systems **14** connected to the dynamic key crypto provider **10**. The service provider **14** may be an industry typical website usually requiring a username and password. Examples of a service provider **14** include but are not limited to social networking websites, corporate IT services, and online banking, healthcare, and travel services.

[0050] FIG. **2** shows an illustrative example for providing and using dynamic key cryptography to ensure a valid service user **20** is using an authenticated computer **18** in a system such as system **200** shown in FIG. **2**. As described in more detail below, system **200** may collect and catalog a number of minutiae values of computer **18** and service user **20** that may be useful for identifying the computer **18** and service user **20** in the sense that computer minutia **64** and secrets and biometric minutia **26** can be used by the dynamic key crypto provider **10** to form dynamic keys unique to each and every distinct computer **18** and service user **20**. In other words, each distinct computer **18** may have a method for using unique computer minutia **64** and secrets and biometric minutia **26** in system **200** that corresponds to that distinct computer **18** and service user **20**, and each uniquely identified computer **18** corresponds to one and only one distinct computer **18** and each uniquely identified service user **20** may correspond to one and only one distinct service user **20**. The unique identification of a computer **18** may be processed by system **100**, for example, by a service provider **14** or by the dynamic key crypto provider **10**, and there be no meaningful single identifier or identity key itself stored on the computer **18**. System **200** shown in FIG. **2**, illustrates an example of identifying and authenticating a specific computer **18** and service user **20** via challenge, response and validation sequences performed by dynamic key crypto provider **10**. Each distinct computer **18** and service user **20** may be recognized, for example, by specific computer minutia **64**, specific secrets and biometric minutia **26**, combinations of computer minutia **64**, combinations of specific secrets and biometric minutia **26** or combinations of both specific computer minutia **64** and combinations of specific secrets and biometric minutia **26** found on the

computer **18** or collected by the computer **18** from the service user **20** as cataloged by the dynamic key crypto provider **10**.

[0051] Collection of minutia can include methods such as fuzzing and hashing that obfuscate the actual values of minutiae that represents personal identifiable information before the minutiae values are sent from the computer **18** to the dynamic key crypto provider **10** such that the anonymity of a service user **20** is maintained. For example, phone numbers can be hashed so that the actual phone number is not known. In another example, the geo-location home of a service user **20** can be fuzzed by truncating the GPS coordinates so that the value processed by the dynamic key crypto library **56** represents, for example, a multiple mile radius, not multiple feet. In this manner, it would be difficult to determine the exact address a computer **18** resides nearly every night that could be interpolated to be the home of the service user **20**. The fuzzy geo-location can be beneficial because the location of the computer **18** can be tracked without invading the privacy of the service user **20** because, to the dynamic key crypto provider, the service user **20** can be anonymous. If a service provider that knows the true identity of a service user **20** were to also know the geo-location of the device, the privacy of the service user **20** could be abused. Thus, a separation of device and user knowledge can exist so that the device (i.e. computer **18**) of an anonymous service user **20** can be tracked 24×7 and service providers (who do know the identity of service user **20**) can ask for geo-location information from dynamic key crypto provider **10** only when they require it so as to gain benefit of geolocation without a privacy invasion of the service user **20**.

[0052] As shown in FIG. **2** at step **2001**, in one example, computer minutia **64** can represent a set of 390 distinct minutiae values that may be chosen for collecting and cataloging from the computer **18**. In the particular example, there are 40 categories or types of the minutia that are hardware minutia; 70 categories or types of the minutia are firmware minutia; and 280 categories or types of the minutia are software minutia. Hardware minutia may include such items as the device manufacturer, model number, serial number, and international mobile equipment identification (IMEI) number, for example. Firmware minutiae may include, for example, the name of the firmware vendor, version number, revision number, revision date, communication and telephony services, location and GPS data, and operating system. Software minutia, similarly for example, may include application name, supplier identification, software release number, memory reads, software cataloguing, clock and other counters, and date. Hardware minutia values typically cannot change without changing a physical component of the computer **18**. Firmware minutia can be updated but usually their update is controlled by someone other than the service user **20**. Software minutia changes dynamically via various individual instantiations of service user **20** and includes elements that may require predictable, constant change in normal situations (i.e. frequently called contact phone numbers).

[0053] It is important to note that software minutiae values can often reflect customizations performed by the service user **20**. In this manner, software minutiae values can accurately identify computer **18** devices that are otherwise extremely similar in hardware and firmware. When the computer **18** is manufactured, devices are very similar, hence the need for serial numbers, but, under security considerations, these hardware minutia identifiers are few in number and can be easily spoofed. Significant customization affecting software minutiae values is typically done within days, even hours, of ownership of a computer **18** by the service user **20**. Thus the software minutiae values diverge significantly at device personalization and the addressable space continues to expand throughout the use of the computer **18** by the service user **20**. Therefore, the uniqueness of a computer **18** increases with time after manufacturing, this is often referred to as entropy, or the natural tendency towards chaos, and, thus, software minutiae are valuable in the security of dynamic key cryptography functions. To illustrate the potential range represented by the values of minutia if, for example, there were 300 minutia values each averaging four bytes in length, by interleaving and mixing the minutia values to form dynamic crypto keys, the keys could represent a space defined by as 2 raised to the 9600th power (cryptographic keys of 2 raised to the 1024 power are considered secure by the industry).

[0054] Nearly any data can be introduced into the system **200** by the definition and addition of minutia classes. For example, PIN, password, service history and other service user **20** secrets can be entered and processed as if they were a class of minutia. For example, a minutia index might refer to memory location where the minutia value could be read and processed. If the minutia index for the PIN is sent to the device, instead of, for example, reading a memory location, a PIN screen can be displayed on the computer **18**, the service user **20** can enter their PIN (or other secret value) and the information entered can be processed as the minutia value in the method here described by system **200**. A similar process can be performed for biometric values, for example, facial geometry, voice patterns, fingerprinting. In another example, the service provider app **44** might be analyzed and the software structure itself provide minutiae values that can be challenged and validated to ensure the run-time integrity of the calling application service provider app **44**. Thus by adding minutia classes, any information can be processed to get the benefits of system **200** (e.g., secure input for crypto key material, fuzzy validation matching, inferred minutia value learning, confidence rating).

[0055] Step **2003** shows an example of specific values of the minutia **70** database for a specific computer **18**. The minutiae can be obtained via the dynamic key crypto library **56**. Various instances of the dynamic key crypto library can exist on a single computer **18** and can be related to one or more instances and providers of a service provider app **44**. In this example, the first hardware minutia (H**1**) may be the IMEI number of computer **18**, and for the specific computer **18** of the example, the IMEI number may be encoded as "1234". The computer **18** may have specific values for the 40 different hardware minutia, H**1** to H**40**; specific values for 70 different firmware minutia, F**1** to F**70**; 280 specific values for different software minutia, S**1** to S**280**, 2 specific values for service user **20** secrets, ?1 and ?2; and 5 specific values for service user **20** biometric minutia, B**1** to B**5**, from which it may be possible to accurately and uniquely identify the specific computer **18** and associated service user **20** for computer **18**. The actual minutia used and their index ordering as H**1** to H**40**, F**1** to F**70**, S**1** to S**280**, ?1 to ?2, and B**1** to B**5** provide a particular cataloging scheme or a cataloging of minutia DB **70** for the specific example illustrated in FIG. **2**. The combination of specific hardware, firmware, software, secret and biometric values found on the computer **18** and collected from the service user **20** at a particular time or within some pre-defined time frame may be referred to as the "current device image" as indicated at step **2003**.

[0056] For a particular computer **18** and a particular scheme (e.g., H**1** to H**40**, F**1** to F**70**, S**1** to S**280**, ?1 to ?2, and B**1** to B**5** of FIG. **2**) a number of possibilities for specific values of the minutia can actually occur on the computer **18**, be known by the service user **20** or represent the biometrics of service user **20**. For example, as indicated at step **2005**, the specific minutia value for index F**1** may be either of F**1**A, F**1**B, or possibly others, referred to as the anticipated minutia DB **98**. All other computer minutia values remaining the same, a change at the F**1** index from a value of F**1**A to F**1**B, for example, represents one permutation of computer minutia possible for a specific type of computer **18** (e.g., for computers running the Android operating system). It can be seen that if five different values were possible at index F**1**, then 5 permutations that change only F**1** may be possible for each different combination of the remaining computer minutia. Although all 5 values of F**1** may not be possible for every combination, the number of permutations is generally multiplicative so that an estimate of the number of possible permutations can be made by multiplying together the number of possible values at each index, for all the indexes H**1** to H**40**, F**1** to F**70**, S**1** to S**280**, ?1 to ?2, and B**1** to B**5**. For the example shown in FIG. **2**, it can be seen that even with only 2 or 3 values of possibility for each index, the number of permutations, or different possible combinations of minutia, for all types of computer **18** can easily be practically infinite. Thus, even for large numbers of computer **18** that appear otherwise identical, within the millions of different possible combinations of minutia DB **70** and the related practically infinite range of minutia values in the anticipated minutia DB **98**, each single computer **18** can be uniquely identified by matching its unique computer minutia **64** and secrets and biometric minutia **26** collected by computer **18**. As an example, when a service user **20** receives a newly manufactured mobile device (i.e. computer **18**), typically part of the out-of-the-box initialization routine is to customize the computer **18** with service user **20** specific information such as, for example, contacts, email and network connections. The customizations these additions represent (i.e. minutia) can immediately differentiate two examples of computer **18** that were manufactured one immediately after the other. As the service user **20** uses their computer **18**, the usage continues to affect and differentiate the minutiae that can be collected from the computer **18** (e.g., frequently called phone numbers). By maintaining a database of all industry updates related to the collective industry of instances of computer **18**—e.g., by collecting and cataloging all industry updates to hardware, firmware, and software minutia—dynamic key crypto provider **10**, for example, may be able to know what all the possibilities are for the computer minutia **64** of a given computer **18** so that method **2000** may be able to recognize a computer **18** in spite of changes not reflected or known by the current minutia DB **70**. In fact method **2000** may improve the accuracy and fault tolerance of its recognition of devices (i.e. computer **18**, computer minutia **64**, service user **20** and secrets and biometric minutia **26**) by exploiting knowledge of changes (i.e. anticipated minutia DB **98**) to the current device image (i.e. minutia DB **78**).

[0057] When using combinations of computer minutia **64** for identifying a specific computer **18**, method **2000** may use intelligent minutia selection **114** to select a combination of minutia from the total set of minutia (i.e. computer minutia **64** and secrets and biometric minutia **26**). In the specific method **2010** example illustrated in FIG. **2**, the combination of minutia chosen is one hardware minutia, Hx, one firmware minutia, Fy, and one software minutia Sz. Such a combination may be referred to as a "triplet". Although a triplet Hx-Fy-Sz may include one hardware, one firmware, and one software minutia as in the example illustrated in FIG. **2**, a triplet could also include, for example, two hardware minutiae and one software minutia, e.g., Hx-Hy-Sz. Also, for example, more or less than three minutiae could be used at a time, e.g., a "quadruplet" such as Hx-Fy-Sz-Bb. Any combination of minutia from the total set of minutia DB **70** may be used. Smaller subets of minutia values constrain the scope of change within the minutia values so the results can be rapidly validated. Longer subsets of minutia values increase the potential change (and therefore security) and can be useful in infrequent, but high security crypto actions like digital signature.

[0058] The particular values for x, y, and z are not specified for this example so that Hx could be any one of the 40 hardware minutia H**1**-H**40** shown in step **2003**, e.g., IMEI number. Similarly, Fy could be any one of the 70 firmware minutia, and Sz could be any one of the 280 software minutia shown, for example, in step **2003**. A hardware minutia of a particular computer **18** generally will not change without changing the entire computer **18** (and identity) itself, so whatever hardware minutia, Hx, is used, it may not be expected to change for the particular computer **18** being challenged, as indicated by "(no changes)" next to H**1**-H**40** in step **2005**, so that the number of possibilities for each individual Hx is limited to one. In the particular example illustrated in method **2030** of FIG. **2**, the firmware minutia, Fy, is assumed to have nine different acceptable values for illustration, and the software minutia, Sz, is assumed to have twenty different acceptable values for illustration. Method **2030** can vary the fault tolerance of the invention by varying the allowable range of acceptable minutia values with respect to the range of possible minutia values for each minutia value.

[0059] Although it may be the case that certain combinations of hardware, firmware, and software values may be incompatible (e.g., a particular software update might require a particular firmware update) the example of FIG. **2** assumes that all updates are independent so that the total number of permutations of acceptable device characteristic values for the particular computer **18** being challenged is the product of the number of acceptable possibilities for each component, Hx, Fy, Sz, of the triplet Hx-Fy-Sz, or 1*9*20=180, as indicated at step **2007**. The number of acceptable permutations for a selected combination of minutia, then, can be smaller than the number of possible permutation for the same triplet and significantly smaller than the total number of permutations for all minutiae, as shown by this example, e.g., 180 out of potentially millions of possible minutia values and 180 out of the potentially infinite number of permutations as indicated at step **2005**.

[0060] Selection of the particular combination of minutia (e.g., Hx, Fy, Sz for the example of FIG. **2**) to be used for challenging a particular device may vary, not only from computer **18** to computer **18** and service provider **14** to service provider **14**, but, for example, each time the same computer **18** is challenged on behalf of the same service provider **14**. The intelligent minutia selection **114** may employ a number of considerations in selecting the combination of minutia to be used for a particular challenge of a particular computer **18** and service user **20**. As shown step **2010**, intelligent selection of the combination of minutia (e.g., Hx, Fy, Sz for the example) may be based on need for uniqueness, predictability and scope of possible changes. For example, selection of

minutia may use expectations for changes to the current minutia DB **70** database based on knowledge of the current computer minutia **64**, current secrets and biometric minutia **26** and knowledge of all minutia value updates that can occur (i.e. anticipated minutia DB). Knowledge of all minutia value updates that can occur, whether or not the updates actually have occurred, can be gained from the previously mentioned collecting and cataloging industry-wide of all computer minutia updates and the heuristically determined trends caused by the use of computer **18** by a particular service user **20**. Also, for example, if uniqueness and predictability are of concern, minutiae may be chosen for which the values are known and are not expected to change. If scope of possible changes is of concern, minutiae with a reduced capacity for change or a tighter tolerance of acceptable change may be selected. Combinations of minutiae can be selected to isolate a particular minutia by combining it with static minutiae. Likewise, a static minutia can be grouped with minutia that changes rapidly to form a set that changes in some manner to protect static minutia members. Minutia sets can be selected to address specific purposes such as geo-location or user secrets. Minutia sets can combine minutia from the various identity factors of something you have, something you know and something you are. Minutia values can be selected to periodically 'refresh' validations of specific minutiae.

[0061] The intelligent minutia selection **114** process can select minutiae from the different minutia sources of hardware, firmware, software, user secrets and user biometrics. The intelligent minutia selection **114** process chooses the minutia nearly randomly to widely and unpredictably sample various computer minutia **64** and secrets and biometric minutia **26** such that deducing a pattern for minutia sampling is difficult to infer. However, there may be certain minutia pairings and groupings that readily show and determine changes to computer minutia **64**. In such cases, a 'selected' (versus 'random') subset of minutiae may be selected by the intelligent minutia selection **114** process.

[0062] After the intelligent minutia selection **114** process determines the minutiae to be used, the formulate challenge **116** process looks up the minutia index for that minutia from the SP info and IDs **32** database; this allows the minutia index for one service provider **14** to be different from another service provider **14**. The indexes are then combined with a random number using an algorithm defined for each service provider (as described in FIG. **3**, specifically the SP info and IDs **32** database); again to provide differentiation and security between service provider **14** instances. The challenge result from the formulate challenge **116** process can then be processes and step **2020** and given to the send challenge and await response **118** process. Since the challenge contains nearly random information which serves as the actual challenge value, the transmission of the challenge need not be done via an encrypted tunnel but it can be sent securely by send challenge and await response **118** if desired.

[0063] As shown at step **2020**, the formulate challenge **116** process can compute a cryptographic key based on the selected combination of minutia (e.g., Hx-Fy-Sz for the illustrated example). For example, each of x, y, and z may be a table index value (e.g., an integer) to the corresponding hardware (H), Firmware (F) and Software (S) information in a database of the particular service provider **14**. The specific x, y and z table ordering and properties for a particular service provider **14** is found both in the dynamic key crypto library **56** created specifically for the service provider **14** and in a database of information specific to the service provider **14** maintained by the dynamic key crypto provider **10**. The key may be computed as shown at step **2020**, for example, by applying a mathematical or cryptographic function "Fn" to the combination of minutia values Hx+Fy+Sz. Thus, the cryptographic key may cryptographically encode information from the selected combination of minutia, e.g., triplet Hx-Fy-Sz. The same minutiae references, for example the x, y and z table indexes, can be computed by applying a mathematical or cryptographic function "Fn", which may be the same or a different function from that used earlier, to form a challenge value combining the indexes with other information such a random number, as used in the example. Thus, the challenge cryptographically encodes enough information for the computer **18** being challenged to determine which minutia should be used in computing its actual response. It is important to note, however, that even though the computer **18** may use the minutiae Hx-Fy-Sz and its own actual values for those minutiae in computing its response, no information as to what are the actual values of the minutiae is included in the challenge or response nor is directly gleanable from the response.

[0064] At step **2030**, the dynamic key crypto provider **10** computes all responses that are acceptable for the computer **10** to make. The acceptable response computations can be based on the allowable range of possible changes to the defined subset of minutiae selected for the challenge. These computations can be performed beforehand (e.g., independently—whether prior, concurrently, or after—receiving the actual response from the computer **18**) and stored in valid responses DB **130** for comparison to the actual response from computer **18**. The challenge may be sent by dynamic key crypto provider **10** or by the service provider **14** to the particular computer **18** being challenged. The range of possible changes may be processed because of the constant and continuous collecting and cataloging of industry updates for the total set of minutia from which the particular combination of minutia (e.g., Hx, Fy, Sz for the example of FIG. **2**) to be used for challenging the particular device is selected. Because every allowable response to a challenge is therefore known (e.g., computed at step **2030**) before the challenge is sent to the computer **18**, the actual response that will be received from the computer **18** to the challenge may be among the range of pre-processed acceptable responses (and therefore among the acceptable changes) computed by the dynamic key crypto provider **10** that is challenging the computer **18**. As illustrated at step **2030**, in this particular example having no possible changes for hardware (e.g., one possible value), nine possible changes or values for firmware and twenty possible changes for software, there are **180** allowable responses for the computer **18** to return to the challenge. Each of the **180** allowable responses may be calculated by the dynamic key crypto provider **10** in a similar manner that the computer **18** will compute its actual response in response process **112**, as illustrated in step **2040**.

[0065] At step **2040**, the particular computer **18** being challenged may receive the challenge and unpack the challenge to determine which minutia it should collect and use the values of to form its response to the challenge. Having unpacked the challenge using information and algorithms stored in the dynamic key crypto library **56**, the response process **112** can use the computer **18** to fetch the values of the selected computer minutia **64** or collect the values of selected service and biometrics minutia **26** and build a key that may be identical to the key computed by the dynamic key crypto provider **10** at

step **2020**. The particular computer **18** being challenged may form a response to the challenge by applying a mathematical or cryptographic function "Fn", which should be the same as that used at step **2020** or step **2030**, to the key+challenge as shown in FIG. **2**. The computer **18** being challenged may then communicate the response to return it directly to the dynamic key crypto provider **10** or indirectly via the service provider **14**. Again, since the challenge and response exchange may contain a random number element, it can change every time, even if the same minutiae were selected. As such, it does not need to be securely transmitted between computer **18** and dynamic key crypto provider **10** over network **16**, but it can be if desired. The dynamic key crypto provider **10** sends the computer **18** response to the validate response from computer **120** process for processing in step **2050**.

[0066] As illustrated at step **2050**, the validate response from computer **120** process can therefore be determined by simply comparing the actual response received from the computer **18** to the allowable responses that are pre-processed by the dynamic key crypto provider **10** to determine if there is a match. Decrypting or decoding of a response is not necessary so the validation can occur very quickly. On a match between the actual response and one of the pre-processed responses, the validate response from computer **120** process may then know what the particular actual minutia values from computer **18** are for the combination selected (e.g., triplet Hx-Fy-Sz) by knowing which possible response has matched the actual response even though neither response contains any direct or decipherable information about the actual minutia values. If a match is found, the subset of minutiae used in the challenge may be regarded as being known or authenticated. For example, as seen at step **2007**, if the actual response matches the 172nd possible response "Resp172" or permutation, then the actual device values must match those of Hx, the first possibility for Fy (e.g., Fy0), and the twentieth possibility for Sz (e.g., Sz19) even though "Resp 172" itself contains no direct information regarding the actual minutia values being challenged.

[0067] The validate response from computer **120** process can use logical groupings of minutia values to increase the confidence of a matched response. Groupings of related minutia may be gleaned, for example, from the anticipated minutia DB **98** or discovered heuristically. For example, if a set of minutiae is only changed via an industry update and all minutiae within the set change to unique values in unison with the particular update, then should a particular minutia value or values within the set of update related minutia not share the expected values of other minutiae with regard to a single update set, then the validate response from computer **120** could deduce the response related to the minutiae values within the update logical grouping may be in error or fraudulent. As an example, should a fraudulent entity alter the computer **18** to return falsified information when the minutia value is collected by the response process **112** via the operating system on computer **18**, the actual minutia value would not be returned. In this manner, a fraudulent entity could make one computer **18** look like another computer **18** or make one service user **20** appear as another service user **20**. The validate response from computer **120** can use logical groupings of minutiae and, for example, employ multiple methods for collecting what should be the same value (i.e. a smartphone's phone number can be learned through several methods) (1) Often, multiple methods exist for reading a particular value such as phone number. The various methods can be used and the returned minutia value compared for consistency. (2) Often groups of minutia values are related such that a change in one should create changes elsewhere (for example time and time zone.) In the validate response from computer **120** process, the minutia values related to one another can be verified to ensure changes are found to be consistent throughout the related 'group' of minutia values.

[0068] Even if an exact match is not found, the allowable ranges from the set of possible minutiae may be expanded or additional challenges using other, possibly related minutiae, may be sent to the device in an effort to validate the device. If necessary, changes in the computer minutia **64** of a computer **18** can be sent from the computer **18** to the dynamic key crypto provider **10** using the registration subsystem **400** described in FIG. **4**.

[0069] If the response is not an expected response, then a validation failure process as described in FIG. **6**B can alert the service provider **14** that the validation has failed.

[0070] At step **2060**, on a match between the actual response and one of the pre-processed responses, the update computer minutia **128** process may then know what the particular actual minutia values from computer **18** are for the combination selected (e.g., triplet Hx-Fy-Sz) by knowing which possible response has matched the actual response even though neither response contains any direct or decipherable information about the actual minutia values. The values from the valid responses DB **130** used in the response calculation can then be used to update the values stored in the minutia DB **70** database.

[0071] FIG. **3** illustrates a service provider application (app) delivery system **300** in accordance with an embodiment. FIG. **3** shows a system for delivering a service provider app **44** to a computer **18** such that the service provider app **44** has included within it a dynamic key crypto library **56** which is unique to the service provider **14** and performs computer security functions on the computer **18**.

[0072] The service provider app **44** may be similar to a typical industry application except that service provider app **44** makes application programmer interface (API) calls to a dynamic key crypto library **56** that was compiled as a library with the application source code **42** to form the final executable form of the service provider app **44**. The service provider app **44** can be shared with the dynamic key crypto provider **10** for analysis to generate minutia values that can validate the integrity of service provider app **44** when service provider app **44** is running on a computer **18**. Service provider app **44** may contain or wish to store data that the service provider **14** requires to secure and make private.

[0073] Within the dynamic key crypto provider **10** there may be a service provider registration **30** process for registering service provider systems **14** to use system **300**. The service provider registration **30** process records and generates data specific to the service provider **14** and stores that data in the SP info and IDs **32** database. Such data can include preferences like PIN utilization (i.e. force a system PIN, use a service PIN, etc.) and minimum scores to allow connection. The SP info and IDs **32** database may be, for example, a list of customers and partners for whom a custom dynamic key crypto library **56** has been created. The SP info and IDs database **32** may include key material used to identify and encrypt data of the service provider **14** throughout the system **300** and a table for indexing minutia. Such SP info and IDs **32** database may uniquely identify the service provider **14** and ensure that features and elements of system **300** used by the

service provider **14** are secure and separate from other service provider systems **14** that might use the system **300**. This provides service separation of data and identifiers such that multiple, independent service provider systems **14** cannot collude, compare data and infer what might be considered private data or tendencies of a service user **20**.

[0074] The SP info and IDs **32** data unique to a service provider **14** may be used in a custom library creation **34** process to make a dynamic key crypto library **56** which contains data elements of the SP info and IDs **32** database. In addition to data unique to the service provider **14**, the custom library creation **34** process can create code custom to a particular service provider **14**. Such custom code can include different encryption algorithms (e.g., AES, RSA, Elliptical curve), different hashing algorithms (e.g., secure hash algorithm (SHA-1), message digest (MDM)), unique system encryption keys, unique look up table routines and orderings, different hashing methods for combining minutia values into dynamic crypto keys (e.g., interleaved bit transformations, reverse-ordering, bit inverse, bit shifting), and minutia definitions and classes uniquely available to a particular service provider **14**. All of the customizations when compiled form a dynamic key crypto library **56** unique to the service provider **14** such that a breach of a dynamic key crypto library **56** for one service provider **14** may not affect the dynamic key crypto library **56** of another service provider **14**. In addition, even if the exact same minutia values are used to form a dynamic crypto key on the exact same computer **18**, the resultant dynamic crypto key for one service provider **14** may be different than the resultant dynamic crypto key for another service provider **14**; thus the responses for different instances of service provider **14** would be different even if the exact same challenge was sent.

[0075] Because of the different SP info and IDs **32** databases used in the formation of the dynamic key crypto libraries **56**, two instances of service provider **14** (e.g., two different online service providers), for example, may be prevented from being able to compare information gleaned from the computer **18** and conclude their individual service provider apps **44** are residing on the same computer **18**. This prohibits the profiling of a service user **20** based on multiple instances of service provider **14** connected to their computer **18**.

[0076] Likewise, because of the unique computational possibilities introduced in the custom library creation **34** that formed the dynamic key crypto library **56**, a successful attack against the privacy and security included within a particular dynamic key crypto library **56**, may not be successful against a dynamic key crypto library **56** related to another service provider **14**.

[0077] The dynamic key crypto library **56** is responsible for, among other activities:

[0078] 1) reading computer minutia **64** found on the computer **18** and facilitating entry by service user **20** of secrets and biometric minutia **26** into computer **18** that can validate that an appropriate service user **20** is using an identified computer **18**;

[0079] 2) communicating computer minutia information across the network **16**;

[0080] 3) responding to dynamic key crypto provider **10** challenges to establish a computer's unique identity, protect data, and perform digital signatures using computer minutia **64** found on the computer **18** and secrets and biometric minutia **26** input by service user **20** into computer **18**;

[0081] 4) processing requests from the dynamic key crypto provider **10** to possibly hold, transfer, or a delete service provider app **44** and itself (dynamic key crypto library **56**); and

[0082] 5) randomizing or obfuscating dynamic key crypto library **56** activity through various mechanisms that make it difficult to intercept sensitive actions.

[0083] The dynamic key crypto library **56** created uniquely for the service provider **14** may be sent to the service provider **14** securely over a network **16** in the send custom library to service **38** process using any of several methods. The dynamic key crypto library **56** may include program logic designed to perform security functions both directed by and on behalf of the service provider app **44** by interacting with the computer **18**. With newer forms of computer **18** (e.g., smartphones and tablets), a dynamic key crypto library **56** that functions as part of the service provider app **44** when it is running is a more reliable method then independently running applications to access the required services for computer **18**. Furthermore, the larger combined code size of the dynamic key crypto library **56** and the service provider app **44** can impose a more tedious and difficult effort to isolate the security functions in an effort to defeat the security.

[0084] The service provider **14** may perform an industry typical build application **40** process by combining the dynamic key crypto library **56** with application source code **42** of the service provider **14** to create a service provider app **44**. The service provider app **44** can be distributed any number of ways including directly over a network **16** and through a third party software distributor **22** either over the network **16** or directly to the service user **20** for loading on the computer **18** via the distribute application **46** process. The third party software distribution system **22** may be an optional system or systems for distributing software from the service provider **14** to computer **18**. Apple's AppStore® is an example of such a software distribution system.

[0085] FIG. **4** illustrates a system **400** for registration of computer and user minutiae in accordance with an embodiment. FIG. **4** shows a system for registering a computer **18** with a dynamic key crypto provider **10** and a service provider **14** over a network **16**.

[0086] The computer **18** may have on it a service provider app **44**. When the service provider app **44** is installed, the dynamic key crypto library **56** within the service provider app **44** may run tests to proof the install **76**. Proof the install **76** can be part of the dynamic key crypto library **56** and can use a shared secret supplied by service provider **14** through a user authentication **50** process. In this case the service user **20** might answer previously defined questions, recognize historical service usage, and recognize past instances of computer **18** used by service user **20** or other identity proofing methods.

[0087] Additionally, the proof the install **76** process can look for other instances of service provider app **44** from other service provider systems **14** and report any found instances back to the dynamic key crypto provider **10** for additional assurances on the history of the computer **18**.

[0088] After the user authentication **50** is performed, the service provider **14** may send to the dynamic key crypto provider **10** an account identifier that the service provider **14** uses to identify the service user **20**. The register computer **68** process binds the account identifier with the computer minutia database (DB) **70** to link the service user **20** to a particular computer **18**.

[0089] The dynamic key crypto library **56** can sample a wide range of computer minutia **64** and secrets and biometric minutia **26** using the fetch key minutia **58** process including minutiae from the computer **18** (hardware, firmware, and software) and minutiae from the service user **20** (secrets and biometrics). Secrets and biometric minutia **26** may be collected from the service user **20** by the computer **18** or via other conveyance methods. Not all possible minutia values are required to be read at installation; some may be read at a later time.

[0090] A process to select minutia for service keys **60** uses some or all of the computer minutia **64** to create encryption and identifier keys that can be used by the dynamic key crypto library **56** and other parts of the systems **100**, **200**, **300**, **400**, **500**, **600**, **700**, **800**, and **900** for things like encrypted service data **196** stored locally on the computer **18**. These selections may be predefined in a dynamic key crypto library **56** or stored in a service key minutia selections **66** database that is managed and secured by the dynamic key crypto library **56**. The service key minutia selections **66** database may reside within a secure element on the computer **18** and can be used for offline processing. The minutia selected by the select minutia for service keys **60** process may be used by the dynamic key crypto library **56** to dynamically build the service keys required by the dynamic key crypto library **56**; the keys that result from reading the computer minutia **64** are not stored within the dynamic key crypto library **56** or system **400**; they may be computed as they are needed by consulting the service key minutia selections **66** database and using the fetch key minutia **58** process to obtain the resulting computer minutia **64** or secrets and biometric minutia **26**. Thus if a service provider app **44** was copied from one computer **18** to another computer **18**, when the service keys were built from computer minutia **64**, the resulting service key would not be able, for example, to properly decrypt data stored locally on the computer **18**.

[0091] Some of the computer minutia **64** and secrets and biometric minutia **26** are sent to the dynamic key crypto provider **10** via the transmit minutia to dynamic key crypto provider (DKCP) **62** process. A relatively small amount of computer minutia **64** and secrets and biometric minutia **26** can be sent to the dynamic key crypto provider **10** so the dynamic key crypto provider **10** can look for existing matches to the computer minutia **64** in its minutia DB **70** database. If the dynamic key crypto provider **10** finds matching minutia **64**, then the dynamic key crypto provider **10** can send challenge, response, and validation exchanges described in FIG. **2** to verify a wider set of computer minutia **64**. If a wider sampling of computer minutia **64** are properly verified by the dynamic key crypto provider **10**, then it can possibly deduce that this is another service provider app **44** being added to a computer **18**. If the dynamic key crypto provider **10** does not finding matching computer minutia **64** in its minutia DB **70** database, then a subset of computer minutia **64** and secrets and biometric minutia **26** can use the process "transmit minutia to DKCP **62**" such that the computer **18** can be properly and uniquely identified and the remainder of computer minutia **64** and secrets and biometric minutia **26** can be learned by the dynamic key crypto provider **10** using the update computer minutia **128** process described in FIG. **2**. In this manner, it may be possible to transfer some of the minutia via challenge, response, and validation as described in FIG. **2**, and not all of the minutia may need to be transferred via the transmit minutia to DKCP **62** process, which can use several secure transmission methods that may vary by service provider **14** through the customization of the dynamic key crypto library **56**.

[0092] By performing a transmit minutia to DKCP **62** process, various values of computer minutia **64** and secrets and biometric minutia **26** may be sent along with their minutia descriptor to the dynamic key crypto provider **10** which may perform a register computer **68** process. The register computer **68** process may record the computer minutia **64** and secrets and biometric minutia **26** into a minutia DB **70** along with a reference to the service provider **14** account identifier for the service user **20**. The minutia DB **70** can store the type (or category) of minutia, its value and the service identifier for later processing.

[0093] The dynamic key crypto provider **10** is able to store the computer minutia **64** and secrets and biometric minutia **26** which have been randomized by the unique dynamic key crypto library **56**. The dynamic key crypto provider **10** is also able to decrypt service provider (SP) minutia **74** using SP info and IDs **32** data to learn the actual computer minutia **64**. Many of these actual minutia values are known only by the dynamic key crypto provider **10** and may be used later for services to multiple service provider systems **14**.

[0094] Some of the actual computer minutia **64** and secrets and biometric minutia **26** may be sent to the service provider **14** via a send computer profile to SP **72** process. To protect a service user **20** from being profiled by various instances of service provider **14** that might collude and interpolate minutia values, the descriptive names of the minutia values can be abstracted so their actual meaning is unknown (e.g., counter-1, counter-2, entertainment-1). In addition, where possible, the values of the minutia can be hashed to hide the actual minutia value. The service provider **14** can store computer info **52** into SP computer info DB **54** or store data in the service and user data **24** database (or both). The SP computer info DB **54** information can be useful to the service provider **14** for understanding the types and minutia of computer systems **18** running their service provider app **44** software. Such information might include OS type and version, computer make and model, for example. The service and user data **24** database might contain secrets such as PINs and passwords meaningful to the service provider **14**.

[0095] FIG. **5** illustrates a system **500** that may be used to catalogue and model industry minutia to create and update anticipated minutia databases in accordance with an embodiment. FIG. **5** shows a system **500** for creating an industry update catalogue DB **96** from a wide range of industry sources and using that information to form an anticipated minutia DB **98**.

[0096] The dynamic key crypto provider **10** routinely performs industry minutia cataloguing **86** processes for ultimately amassing an industry update catalogue DB **96**. This database is for managing a vast but finite collection of industry minutia. Large scale searches, interpolation, multi-upgrade permutation modeling and probability calculations are performed against the data found in the industry update catalogue DB **96**.

[0097] The industry minutia cataloguing **86** process uses computer industry research **90** to heuristically and empirically perform a minutia update collection **88** process. The minutia update collection **88** process scours a network **16** (for example, the Internet) seeking out information from software manufacturers **80**, computer hardware manufacturers **82** and firmware manufacturers **84**. Software manufacturers **80** may

include, among other entities, software manufacturers, online software storefronts, support services for software, and some operating systems. Computer hardware manufacturers **82** may include, among other entities, manufacturers of PCs, laptops, tablets, smart phones, purpose-built computers, and other hardware often capable of connecting to a network **16**. Firmware manufacturers **84** may include, among other entities, software related to hardware (commonly called drivers), some operating system software, software for configuring and controlling access to a network **16** such as a mobile operator network, or public and private cloud networks.

[0098] The minutia update collection **88** process collects such information as the computer industry research **90** process may deem beneficial to system **500**. The collected data is then given to a data modeling, heuristics and permutations **92** process for analysis with regard, for example, to computer or user device identification. The data modeling, heuristics and permutations **92** process considers historical minutia trends and data mining **94** as well as the current minutia DB **70**, the current anticipated minutia DB **98** and the event log **12** which may log actions and exchanges performed by the dynamic key crypto provider **10** for auditing and heuristic analysis at later times. The industry updates themselves can be grouped and related such that one minutia update in the industry update catalogue DB **96** can trigger expected changes in other related minutia values. For example, if an operating system industry update is shown to change fifteen minutia values and the minutia values are not affected by service user **20** usage (including, e.g., build number, build name, subsystem versions, system sizes), then these minutia values can be grouped and inferred or validated collectively in the data modeling, heuristics and permutations **92** process.

[0099] Other related minutia values may change as a result of service user **20** usages. This is related but different to service user **20** behavior patterns; minutia values in minutia DB **70** (such as minutia values related to the computer **18**) establish the behavior of the minutiae (such as computer **18**) and, therefore, behavioral algorithms can be applied to the minutia DB **70** values. For example, if the computer **18** repeatedly connects to a secured wireless LAN (such as one provided by an employer) when the computer **18** is in its 'work' environment during business hours, this could imply a third-party trust of the computer **18** (via, e.g., MAC address validation, WEP key authentication) by the secured wireless LAN; failure to connect under 'normal' working conditions could signal a change such as a lost device or new job. As another example, if values in the minutia DB **70** show that an address book has consistently added addresses over a time period reaching hundreds of names and suddenly the address name count goes to eighty, that could signal ownership by a new service user **20**.

[0100] From data collected and modeled, the data modeling, heuristics and permutations **92** process records possible minutia values in the anticipated minutia DB **98**. The data stored in the anticipated minutia DB **98** is pre-calculated combinations of industry update catalogue DB **96** and minutia DB **70** which are managed and ordered according to probability within the database so that rapid derivative comparisons can be verified and scored against a confidence scale.

[0101] For example, when computer industry research **90** discovers a pending operating system release, the minutia update collection **88** process can gather a copy of the newly released operating system from, again for example, the appropriate firmware manufacturers **84**. The new operating system is processed by the data modeling, heuristics and permutations **92** function and the resultant minutia stored in the anticipated minutia DB **98** for later use by system **500**.

[0102] As another example of anticipated minutia, for minutia that represents system counters, the counter information collected from the minutia DB **70** can be increased an allowable range as determined by the data modeling, heuristics and permutations **92** process. All counter values within the allowable range would then be stored in the anticipated minutia DB **98**.

[0103] In most cases, the data modeling, heuristics and permutations **92** process and the historical minutia trends and data mining **94** process calculate a probability and confidence scoring related to the values stored in the anticipated minutia DB **98**. These probability and confidence scoring values are a determinative factor in the confidence scoring system for computer authentication.

[0104] FIG. **6** illustrates a system **600** for scoring, confidence rating and step-up processing in accordance with an embodiment. FIG. **6** shows a system **600** for computing a minutia validation scoring **140**, comparing the scoring against a threshold defined by the service provider **14** and taking additional actions to process SP step-up request **150** in an effort to increase the scoring over the desired threshold.

[0105] The dynamic key crypto provider **10** contains a subsystem for the minutia validation scoring **140**. The minutia validation scoring **140** subsystem receives a response validated using the subsystem **200** defined in FIG. **2**. The compute score **144** process computes a heuristic and probabilistic scoring of the minutia and minutia values used in the validated response using data from the valid responses DB **130**, the SP info and IDs **32** data, the event log **12** and the anticipated minutia DB **98**. Information in the valid responses **130** database includes both information representative of the current state of computer minutia on the computer **18** and anticipated minutia from industry sources and service user **20** norms, both of which are described in previous figures and in FIG. **9** with regard to the service provider app **44** subsystem **900**.

[0106] For example, the scoring for hardware minutiae might be typically higher than the scoring for software minutiae. Firmware minutia values that change as expected may also have a higher confidence scoring. Likewise, software minutiae (such as date) that change as expected may positively affect the overall scoring of the response.

[0107] Some minutiae value changes, while possibly anticipated, may negatively affect the overall scoring of the response. For example, if a counter value takes an unusually large jump, it will negatively affect scoring. Also, if firmware minutiae values do not reflect routine updating as per industry norms, the scoring may be negatively affected. In addition, if a computer reset is detected that resets a wide range of minutia back to a known factory default, the resulting score may be lower.

[0108] Some minutiae themselves score differently. For example, certain software minutiae may be more predictable and useful than others. So, when a more favored minutia or minutiae are used, the resultant scoring may be higher when compared to validation done with less desirable minutiae.

[0109] Because of the vast number of minutiae to be validated, another scoring input can be the time since a particular minutia value was last validated in a challenge and response exchange with the computer **18**.

[0110] Information outside the scope of a single computer **18** may also impact the scoring. If several instances of a computer **18** are registered to a single service user **20** within a particular service provider **14** as shown in the minutia DB **70**, the high number of registered computer **18** may negatively impact the scoring, especially if several computer **18** computers are considered to be equivalent (for example, three smart phones instead of one smart phone, one tablet and one laptop).

[0111] After compute score **144** is performed, the resulting score is compared against the initial threshold defined by the service provider **14** and typically sent up during the initial connection to the service provider **14**. If the computed score>=threshold **142** then the send score to SP **148** process is used to return the score to the service provider **14** for further consideration.

[0112] If the score>=threshold **142** is not true, then the process SP step-up request **150** is performed. Note the similar process SP step-up request **150** process can be performed if the initial threshold or subsequent thresholds are not met, as defined by the service provider **14**.

[0113] The process SP step-up request **150** performs a compare valid responses and threshold **152** to determine if a possible response and corresponding score are equal to or above the threshold using information from the valid responses **130** database. The process may be governed by a user impact heuristics **154** process which determines the best response and step-up manner in which to increase the score.

[0114] If any score>=threshold **156** is true, then specific minutiae as defined in the use selected minutia elements **168** may be used to formulate challenge **116** and system **600** will continue using the system **200** shown in FIG. **2**. In this manner, the service users **20** may not be inconvenienced by having to take an action.

[0115] If current score+2nd>=threshold **158** is true, then the use three identity factors **170** process may request the dynamic key crypto provider **10** to direct the dynamic key crypto library **56** to collect service user **20** secrets or biometric minutia using computer **18**.

[0116] If new score+2nd>=threshold **160** then both the new, selected minutia challenge and the use three identity factors **170** processes may be triggered.

[0117] If there is no way for a new, selected minutia challenge to achieve a score equal to or higher than the threshold requested by service provider **14**, then the send validation failure to SP **162** process is performed.

[0118] When the service provider **14** receives a scoring from the Minutia validation scoring **140** from the dynamic key crypto provider **10**, it first determines if a step failure **172** occurred. If this is the case, the dynamic key crypto provider **10** is unable to match the threshold desired by the service provider **14**. The service provider **14** must then determine how to respond in the validation failure process **180** which, for example, can include denying the service request or conducting an out-of-band identity proofing of the service user **20** that might trigger a new computer **18** registration as shown in FIG. **4**.

[0119] If the score from the dynamic key crypto provider **10** is not a step-up failure as determined in step failure **172**, then the SP risk process **174** compares the score against its own risk tables for the service action requested by the service user **20**. If the score>=threshold **142** then the allow user action **182** may be performed; the confidence in the computer **18** and optional service user **20** may be sufficient for the service provider **14** to allow the requested action.

[0120] If the score>=threshold **142** fails, then the request step-up authentication from dynamic key crypto **178** process requests the dynamic key crypto provider **10** to perform a process SP step-up request **150** in an effort to get a scoring above the desired threshold.

[0121] FIG. **7** illustrates an authentication system **700** in accordance with an embodiment. FIG. **7** shows a system **700** for dynamic key cryptography authentication possibly using minutiae from the three identity factors (have, know and are) found on computer **18** or collected from a service user **20**.

[0122] When a PIN or password entry is required, for example, as a second identity factor to computer **18** identification, the dynamic key crypto provider **10** may perform a use service PIN **250** decision to determine whether a service PIN native to the computer **18** is used or a PIN specific to the service provider **14** is used according to data stored in the SP info and IDs **32** database. The service provider **14** can mandate the use of a service PIN or mandate or allow that the native computer **18** PIN (or password) be used.

[0123] The dynamic key crypto provider **10** can request a service user **10** PIN entry by the challenge process described in FIG. **2**. In such case, the unpack challenge **108** process can enable the fetch key minutia **58** process to determine a PIN minutia request in the challenge and query use service PIN **250** to determine true or false.

[0124] The dynamic key crypto provider **10** can request either the computer **18** (if such functionality exists) to display system PIN **256** or the dynamic key crypto library **56** running on the computer **18** to perform the display service PIN **254** entry processes.

[0125] If the service provider **14** allows a PIN native to the computer **18** and the computer **18** is capable of a process to display system PIN **256**, then a computer **18** process similar to (or possibly the same as) the display system PIN **256** process is called by the computer **18**.

[0126] If a use service PIN **250** is yes or a computer **18** is not capable of being remotely directed to display system PIN **256**, then the dynamic key crypto library **56** performs the display service PIN **254** entry process.

[0127] If use service PIN **250** is not required, then the dynamic key crypto library **56** determines if system PIN in use **252** is yes. If system PIN in use **252** is yes, then the computer **18** native PIN (or password) screen is displayed via the display system PIN **256** process as if, for example, the computer **18** 'timed out' and the service user **20** was prompted to re-enter their PIN.

[0128] If use service PIN **250** is yes or a system PIN in use **252** is no, then the dynamic key crypto library **56** performs the display service PIN **254** process and a custom PIN entry screen is shown. The valid PIN can be a pre-determined number between the service provider **14** and the service user **20** or can be set during the computer system registration system in FIG. **4** as part of the proof the install **76** process or some other registration process.

[0129] Regardless of the PIN screen displayed, the service user **20** enters a PIN into the computer **18** using the secrets and biometric minutia **26** information the service user **20** possesses. When the system PIN in use **252** is true the validation of the PIN is performed by the computer **18** itself. When a correct PIN is entered, the dynamic key crypto library **56** can perform a get time since last successful PIN event **260** process and return the new time since a valid last PIN entry to

the dynamic key crypto provider **10**. In this manner, a service user **20** may not have to enter multiple PINs or the same PIN multiple times to show they are in possession of the device; the system PIN acts a universal PIN for all protected service provider apps **44** running on the computer **18**. When use service PIN **250** is true, the dynamic key crypto library **56** uses the PIN value entered by the service user **20** into the computer **18** to calculate actual response **106** which is then returned to the dynamic key crypto provider **10** for validation as described in FIG. **2**.

[0130] If a valid PIN entry is not performed, the dynamic key crypto library **56** may time-out and return the failure to the dynamic key crypto provider **10**.

[0131] In another example, the fetch key minutia **58** process may result in a process biometric request **262**. In such case, the get biometric minutia **264** process will interact with the computer **18** to collect the secret and biometric minutia **26** data from service user **20** via entry into computer **18**. The biometric minutia values can then be used to calculate actual response **106** which is then returned to the dynamic key crypto provider for validation as described in FIG. **2**.

[0132] In still another example, the fetch key minutia **58** process may determine a digital signature **258** is requested and perform a digital signature via a substitute message hash for random number **242** process. In this manner, the hash or digest of an action (such as a transaction receipt or other summary) can be signed by the minutia returned by the fetch key minutia **58** process using the calculate actual response **106** process. The fetch key minutia **58** process may fetch any number of minutia values covering any or all of the three factors of identity ("have", "know", and "are", e.g., respectively, the computer **18**, the secrets service user **20** knows or represents or biometric minutia (from secrets and biometric minutia **26**)).

[0133] As an illustrative example, to form a digital signature, the contents of a message can be hashed so that changes to the message contents form a different hash and any changes to the message become evident. The hash can then be 'signed' (encrypted) using a dynamic crypto key that contains minutiae that represent the computer **18** on which the signature occurred including relatively stable minutia (e.g., hardware minutia), geo-location minutia, and fast changing minutia (e.g., date, counters) that establish the computer **18** on which the signature was performed, where the signature was performed and multiple minutia values that collectively could validate when the signature occurred. In addition, the minutia used to form the signing dynamic crypto key could include secrets (e.g., PIN) that only a service user **20** should know and biometric minutia (e.g., facial geometry) that only a service user **20** could produce to establish who digitally signed the digest. In this manner, the dynamic crypto key can bind the instrument, place, time and person to a particular message. Thus, a very wide range of minutia can be used in the dynamic signature key (not a single triplet, but potentially dozens or even hundreds of minutia values). Furthermore, the behavioral trajectory of the computer **18** could be considered before and after the signature to lend credibility to the digital signature performed.

[0134] FIG. **8** illustrates a system **800** for application processing for data protection security functions in accordance with an embodiment. FIG. **8** shows a system **800** for processing interaction between the service provider app **44** and the dynamic key crypto library **56** to improve the security of both while running on a computer **18**.

[0135] On the computer **18**, the service provider app **44** may have been installed which contains a dynamic key crypto library **56** which may be unique to the service provider **14**. The dynamic key crypto library **56** can process responses from the dynamic key crypto provider **10** to establish a heartbeat and chatter **194**, possibly triggering a delete service from computer **236** self-destruction when there is no heartbeat **210** and randomize or obfuscating dynamic key crypto library **56** activity through heartbeat and chatter **194** system calls to make it difficult to intercept sensitive actions.

[0136] The dynamic key crypto library **56** performs some of its activities in direct response to either calls by the service provider app **44** or the dynamic key crypto provider **10**. For the randomization, obfuscation and sampling of the computer minutia **64**, the dynamic key crypto library **56** can perform tasks while the service provider app **44** is idle, waiting for response from either the service user **20** or other external drivers; often this is referred to as waiting in the event loop.

[0137] The service provider app **44** can encrypt and decrypt data **190** to securely and privately store service provider **14** and service user **20** data on the computer **18** in encrypted service data **196**. The encrypt and decrypt data **190** process can use the service key minutia selections **66** database to determine which minutia the fetch key minutia **58** process should fetch from the computer minutia **64** found on the computer **18** or the fetch key minutia **58** can receive instructions from the dynamic key crypto provider **10**.

[0138] In this manner, the encrypt and decrypt data **190** process may not actually store the keys used in encrypting and decrypting data; the keys are computed as required from the computer minutia **64**. Thus, when the encrypted service provider **14** data and service user **20** data is stored in the encrypted service data **196** database, it cannot be decrypted unless the same computer minutia **64** are present on the computer **18**. Copying the service provider app **44** or encrypted service data **196** (or both) will not enable the decryption of the encrypted service data **196**.

[0139] Encrypted data to be processed by encrypt and decrypt data **190** can be transmitted securely from the service provider **14** over a network **16** to the computer **18**, input into computer **18** by service user **20** or generated locally on the computer **18** by the service provider app **44** or dynamic key crypto library **56**. In the case where the encrypted service data **196** is added or changed by the service provider app **44** or dynamic key crypto library **56**, the service provider **14** can be updated with the encrypted service data **196** over a secure communication between the computer **18** and the service provider **14** using the network **16**. The encrypt and decrypt data **190** process is intended to function on data at rest on the computer **18**, not data typically in transit over a network **16**. However, the same key creation processes based on computer minutia **64** found on the computer **18** can be used for many types of data protection.

[0140] The dynamic key crypto library **56** can also enable a local computer check **192** which uses the encrypt and decrypt data **190** to randomly validate computer minutia **64**. In this manner, random data can be encrypted and, at a later time, decrypted to verify the computer minutia **64** are still valid, and thus the service provider app **44** is running on the intended computer **18**. Similar verifications can be made by the dynamic key crypto provider **10** using challenge, response, and validation system **200** described in FIG. **2**.

[0141] Since the computer minutia **64** may contain minutia that change with normal use and time, the encrypt and decrypt

data **190** may fail after those changes. For fault tolerance of the system, the encrypt and decrypt data **190** can process the data using multiple subsets from the large range of possible computer minutia **64**. In this manner, the encrypt and decrypt data **190** can compute several different copies of encrypted data based off a very wide range of computer minutia **64**. The number of different instances of encryptions based off a single plain text source can be controlled by the dynamic key crypto library **56** which is customizable for each service provider **14**.

[0142] When encrypting plain text data, the encrypt and decrypt data **190** process uses the fetch key minutia **58** process the required number of times as controlled by the dynamic key crypto library **56**. Each time a fetch key minutia **58** is performed, the corresponding minutia indexes are read from the service key minutia selections **66** and the resultant computer minutia **64** is read. The service key minutia selections **66** can be, for example, stored locally on computer **18**, stored in a secure element on computer **18**, or stored in the dynamic key crypto provider **10** data and be directed using the challenge, response, and validation system **200** described in FIG. **2**, Each return of fetch key minutia **58** contains a set of minutia values hashed and used by the encrypt and decrypt data **190** process to encrypt the plain text data and stores the encrypted result in the encrypted service data **196**. Thus, multiple encryptions of the same plain text may be stored in encrypted service data **196** database.

[0143] When attempting to decrypt data in encrypt and decrypt data **190** process, the fetch key minutia **58** process follows the same logic in determining the service key minutia selections **66** and then fetching the related minutia from the computer minutia **64**. When the fetch key minutia **58** returns the minutia values to the encrypt and decrypt data **190**, the encrypt and decrypt data **190** retrieves the encrypted values from the encrypted service data **196** and uses a hash of the minutia values to decrypt the information.

[0144] If the decryption performed by the encrypt and decrypt data **190** does not properly decrypt the plain text—determined by some means of checksum, know plain text tests or other means in the valid decryption **202** determination—then the number of retries exhausted **206** is compared. If more encrypted instances of the plain text exist, then the next set of fetch key minutia **58** is performed which uses the service key minutia selections **66** to index another subset of minutia values which are then retrieved from the computer minutia **64** information.

[0145] This loop of fetch key minutia **58**, valid decryption **202** and retries exhausted **206** is performed until a valid decryption of the data occurs or no more retries remain. If retries exhausted **206** returns true before a valid decryption of the data occurs, then the system faults and triggers a re-registration of the computer **18** as shown in FIG. **4** or the original minutia values used when the encryption was done can be returned by the dynamic key crypto provider **10** to the dynamic key crypto library **56**.

[0146] If a valid decryption **202** was found, then the encrypt and decrypt data **190** can perform a synch minutia with DKCP **201** on any minutia that failed to properly decrypt the plain text. When a synch minutia with DKCP **201** is performed, the changed minutia selections are indexed from the service key minutia selections **66**, the changed minutia is read from the computer minutia **64** and given to the dynamic key crypto library **56** for secure transmission over the network **16** to the dynamic key crypto provider **10** which stores the updated minutia values in the minutia DB **70**.

[0147] The synch minutia with DKCP **201** process can also perform an update library storage **208** function which calls on the encrypt and decrypt data **190** process to recalculate the failed decryptions using the new minutia found in the computer minutia **64**.

[0148] When the dynamic key crypto library **56** connects to the dynamic key crypto provider **10** to update computer minutia of the computer **18**, the dynamic key crypto provider **10** performs an authentication just as if the computer **18** was connecting to a service provider **14**.

[0149] The dynamic key crypto library **56** can also have a heartbeat and chatter **194** process that, for example, may: 1) perform random activity on the computer **18**; 2) function as a heartbeat between the dynamic key crypto library **56** and the dynamic key crypto provider **10**; and 3) obscure and obfuscate meaningful actions.

[0150] The heartbeat and chatter **194** process can periodically perform a response process **112** using a challenge sent by the dynamic key crypto provider **10**. Recall that the dynamic key crypto provider **10** can send a number of challenges to the dynamic key crypto library **56** for later processing. In this manner (described in FIG. **2**) minutia values can be inferred and updated between the computer **18** and the dynamic key crypto provider **10**.

[0151] This or a similar process can also serve as a heartbeat between the computer **18** and the dynamic key crypto provider **10**. If the heartbeat and chatter **194** process does not perform a valid challenge and response cycle within a timeframe defined by service provider **14** and stored within their customized version of the dynamic key crypto library **56**, as shown in the no heartbeat **210** decision, then the heartbeat and chatter **194** process can call the delete service from computer **236** process described in FIG. **8**.

[0152] The heartbeat and chatter **194** process may also periodically fetch random minutia **204** reads of the computer minutia **64** to utilize a wide search space for any malicious parties listening to systems calls made on the computer **18**. The heartbeat and chatter **194** may also randomly call the local computer check **192** process.

[0153] The heartbeat and chatter **194** may perform all of these functions to improve security and obfuscate critical actions. The heartbeat and chatter **194** may be most often called during the event loop of a service provider app **44** so as not to impact performance. The heartbeat and chatter **194** process may also be intelligent so as not to overly use battery power, network bandwidth, or other system resources.

[0154] FIG. **9** illustrates computer identity provider lifecycle functionality and services to service providers in accordance with an embodiment. FIG. **9** shows a system **900** for managing the lifecycle of a service provider **14** and a computer **18** including deleting and transferring services from one computer **18** to a new computer **220** and notifying service provider systems **14** of a new computer **220**.

[0155] The transfer service **226** process can be triggered by several events such as: 1) a new computer **220** being detected as a possible replacement to the computer **18**; 2) a service user **20** requesting a service transfer to the service provider **14**; 3) a reaction to either trigger **1** or trigger **2**, causing other service providers **230** to proactively transfer their service provider app **44**.

[0156] When a new computer **220** performs the registration system **400** shown in FIG. **4**, if the dynamic key crypto pro-

vider **10** discovers that the account identifier supplied by the service provider **14** is already in use by a similar computer **18** (for example, a second smart phone) then a transfer service **238** message can be added as part of the registration process. If required, the service user **20** agrees to transfer service from their old computer **18**, then the dynamic key crypto provider **10** can perform the transfer service **226** process.

[0157] When the service user **20** notifies the service provider **14** that their computer **18** is no longer valid due to loss, theft, replacement, or some other event, then the service provider **14** can request the dynamic key crypto provider **10** to perform a hold, delete, transfer service **232**.

[0158] When a transfer service **226** process is performed, the dynamic key crypto provider **10** can perform a notify other service providers **228** process that notifies the other service providers **230** who have an account identifier registered to that particular computer **18**. Upon notification, the dynamic key crypto provider **10** can share a SP confidence scoring **240** based off information in the SP info and IDs **32** database on the initiating service provider **14** to gauge the validity of the action. The other service providers **230** can, at their discretion, direct the dynamic key crypto provider **10** to perform a hold service **222**, a transfer service **226**, a delete service **224** or even take no action.

[0159] The notify other service providers **228** process stores only the minimal amount of service provider **14** information—such as pointer to the service provider **14** and an account identifier for the service user **20**—to link a computer **18** to a service provider **14**; personal identifiable information of the service user **20** may not be stored or logged by the dynamic key crypto provider **10**.

[0160] For a hold service **222**, the dynamic key crypto provider **10** can update the minutia DB **70** such that it may send a send validation failure to SP **162** for the held computer **18** which will cause a validation failure process **180** to occur and, ultimately, may prompt contact of the service user **20** by the service provider **14** customer care effort.

[0161] For a delete service **224**, the dynamic key crypto provider **10** can instruct the dynamic key crypto library **56** running on the target computer **18** to completely erase the encrypted service data **196** and the service key minutia selections **66** if present, sending a confirmation erase send receipt and encrypted data **234** when the data stores are erased. After the send receipt and encrypted data **234** is sent, the dynamic key crypto library **56** can self-destruct by deleting the service provider app **44** if desired.

[0162] For a transfer service **226**, the delete service **224** is called to affect the old computer **18**. The service provider app delivery system **300** shown in FIG. **3** is then performed. Afterward, the computer system registration system **400** in FIG. **4** may then be performed to completely transfer the service from the old computer **18** to the new computer **220**. The reloading of service and user data **24** may also be performed as described in FIG. **8** with the data being encrypted to computer minutia **64** found on the new computer **220**.

[0163] Both the delete service **224** and the transfer service **226** cause the minutia DB **70** to reflect the decommissioning of the old computer **18**. The old computer **18** minutia data is not deleted from the minutia DB **70** so it can be recognized for other service providers **230** or if the computer **18** performs a new registration either maliciously or through other events such as giving or selling the computer **18** to another service user **20**.

[0164] Various alternative embodiments are possible. For example, in one alternative embodiment, the dynamic key crypto provider **10** may be a multi-tier distribution model that supports tiered ecosystems of service provider systems **14**. In this manner, the dynamic key crypto provider **10** presiding over an eco-system can resolve the minutia within the minutia DB **70** to determine that separate instances of a service provider **14** are referencing the same computer **18**. This allows the dynamic key crypto provider **10** to perform the computer identity provider lifecycle functionality shown in FIG. **9** on their own ecosystem. Only the top tier dynamic key crypto provider **10** can resolve the absolute minutia value from a computer **18**. Certain data will need to be exported from the sub-tier dynamic key crypto provider **10** to the master dynamic key crypto provider **10** to facilitate the lifecycle functionality shown in FIG. **9**.

[0165] In various embodiments, parts of the dynamic key crypto provider **10** can be designed to run onsite for a particular service provider **14** to allow data ownership. Certain data will need to be exported from the onsite dynamic key crypto provider **10** to the master dynamic key crypto provider **10** to facilitate the lifecycle functionality shown in FIG. **9**.

[0166] Also, for example, the dynamic key crypto library **56** does not need to be included in a service provider app **44** in all cases. Some instances of a service provider **14** may not require additional application code at the computer **18** or may use a web browser as their service portal. In this case, the dynamic key crypto library **56** will still exist on the computer **18** but may be a stand-alone, callable routine or a shared resource for the computer **18**. If the dynamic key crypto library **56** is a shared resource, certain application processing functions as shown in FIG. **8** may be compartmentalized within the dynamic key crypto library **56** to achieve the same, for example, service provider **14** and encrypted service data **196** separation.

[0167] In another example, the service provider **14** may also have the ability to make system calls directly to the dynamic key crypto library **56** rather than through an interface of the service provider app **44**.

[0168] In another example, service provider app **44** may not communicate directly with dynamic key crypto library **56**, but communication performed via exchanges between service provider **14** and dynamic key crypto provider **10** who independently communicate with service provider app **44** and dynamic key crypto library **56**, respectively.

[0169] In another example, challenges could be stored on the computer **18** to facilitate faster launch of the service provider app **44** and offline processing.

[0170] In another example, anomalies in computer **18** minutiae might also be used to detect computer malware or other abnormal processing considerations.

[0171] In another example, the challenge, response and validation described in system **200** could be originate from the computer **18** and be useful for service provider **14** authentication and protected data exchange; this enables mutual authentication and benefits for the system.

[0172] In another example, the dynamic key crypto system can facilitate digital rights management for content where the content can only be decrypted on a specific computer **18** by using computer minutiae **64** specifically from computer **18** and content can be only decrypted for viewing by a specific user when they enter secrets and biometric minutia **26**.

[0173] In another example, the anticipated minutia DB **98** can be expanded to model biometric minutia from secrets and

biometric minutia **26** to address maturity and aging of service user **20** for biometric minutiae such as, for example, voice and facial recognition.

[0174] In another example, some forms of a computer **18** that can connect to a network **16** may not be designed for service user **20** interaction, for example machine-to-machine systems. Embodiments may still be extremely useful in this case—for what else is there to identify than the computer **18**—but the secrets and biometric minutia functionality may not apply.

[0175] In various embodiments, the encrypt and decrypt data **190** process generally functions on service and user data **198** stored on the computer **18** locally in the encrypted service data **196** database. In another alternative embodiment, however, the same encryption key processing could be used to secure service and user data **198** as it is transferred over a network **16**. In a similar manner, the minutia DB **70** maintained by the dynamic key crypto provider **10** may be used to decrypt the service and user data **198** when received from the computer **18**.

[0176] Implementations of various embodiments may include computers connecting to the Internet or other networks and computers connecting to a network including but not limited to traditional PCs non-traditional PCs (i.e. smart phones, smart tablets); purpose-built network computers (i.e. smart meters, network equipment, appliances); and computers without a user interface (i.e. machine-to-machine functionality). Various embodiments may include identifying computers which connect to a network; identifying computers which connect to each other with or without concurrent connection to a wide-area network; authenticating computer connections to an online service; authenticating users to an online service; and encrypting information stored on a computer

[0177] In implementation of the various embodiments, embodiments of the invention may comprise a personal computing device, such as a personal computer, laptop, PDA, cellular phone or other personal computing or communication devices. The payment provider system may comprise a network computing computer, such as a server or a plurality of servers, computers, or processors, combined to define a computer system or network to provide the payment services provided by a payment provider system.

[0178] In this regard, a computer system may include a bus or other communication mechanism for communicating information, which interconnects subsystems and components, such as processing component (e.g., processor, microcontroller, digital signal processor (DSP), etc.), system memory component (e.g., RAM), static storage component (e.g., ROM), disk drive component (e.g., magnetic or optical), network interface component (e.g., modem or Ethernet card), display component (e.g., CRT or LCD), input component (e.g., keyboard or keypad), and/or cursor control component (e.g., mouse or trackball). In one embodiment, disk drive component may comprise a database having one or more disk drive components.

[0179] The computer system may perform specific operations by processor and executing one or more sequences of one or more instructions contained in a system memory component. Such instructions may be read into the system memory component from another computer readable medium, such as static storage component or disk drive component. In other embodiments, hard-wired circuitry may be used in place of or in combination with software instructions to implement the embodiments.

[0180] Logic may be encoded in a computer readable and executable medium, which may refer to any medium that participates in providing instructions to the processor for execution. Such a medium may take many forms, including but not limited to, non-volatile media, volatile media, and transmission media. In one embodiment, the computer readable medium is non-transitory. In various implementations, non-volatile media includes optical or magnetic disks, such as disk drive component, volatile media includes dynamic memory, such as system memory component, and transmission media includes coaxial cables, copper wire, and fiber optics, including wires that comprise bus. In one example, transmission media may take the form of acoustic or light waves, such as those generated during radio wave and infrared data communications.

[0181] Some common forms of computer readable and executable media include, for example, floppy disk, flexible disk, hard disk, magnetic tape, any other magnetic medium, CD-ROM, any other optical medium, punch cards, paper tape, any other physical medium with patterns of holes, RAM, ROM, E2PROM, FLASH-EPROM, any other memory chip or cartridge, carrier wave, or any other medium from which a computer is adapted.

[0182] In various embodiments, execution of instruction sequences for practicing the invention may be performed by a computer system. In various other embodiments, a plurality of computer systems coupled by communication link (e.g., LAN, WLAN, PTSN, or various other wired or wireless networks) may perform instruction sequences to practice the invention in coordination with one another.

[0183] Computer system may transmit and receive messages, data, information and instructions, including one or more programs (i.e., application code) through communication link and communication interface. Received program code may be executed by processor as received and/or stored in disk drive component or some other non-volatile storage component for execution.

[0184] Where applicable, various embodiments provided by the present disclosure may be implemented using hardware, software, or combinations of hardware and software. Also, where applicable, the various hardware components and/or software components set forth herein may be combined into composite components comprising software, hardware, and/or both without departing from the spirit of the present disclosure. Where applicable, the various hardware components and/or software components set forth herein may be separated into sub-components comprising software, hardware, or both without departing from the scope of the present disclosure. In addition, where applicable, it is contemplated that software components may be implemented as hardware components and vice-versa—for example, a virtual implementation or a logical hardware implementation.

[0185] Software, in accordance with the present disclosure, such as program code and/or data, may be stored on one or more computer readable and executable mediums. It is also contemplated that software identified herein may be implemented using one or more general purpose or specific purpose computers and/or computer systems, networked and/or otherwise. Where applicable, the ordering of various steps described herein may be changed, combined into composite steps, and/or separated into sub-steps to provide features described herein.

[0186] The foregoing disclosure is not intended to limit the present invention to the precise forms or particular fields of use disclosed. It is contemplated that various alternate embodiments or modifications to the present invention, whether explicitly described or implied herein, are possible in light of the disclosure. Having thus described various example embodiments of the disclosure, persons of ordinary skill in the art will recognize that changes may be made in form and detail without departing from the scope of the invention. Thus, the invention is limited only by the claims.

What is claimed is:

1. A method of dynamic key cryptography, the method comprising:

selecting a subset from a set of minutia types;

for a particular device, sending a challenge to the device, wherein:

the challenge includes information from which the device can collect actual values of minutia corresponding to the selected subset of minutia types in order to form a cryptographic key;

the cryptographic key is never transmitted from the device across any communication channel; and

the cryptographic key is used to encrypt an actual response to the challenge;

pre-processing a set of responses to the challenge based on tracking updates of minutia from which the selected subset of minutia types is selected, wherein:

the set of pre-processed responses covers a range of all actual responses possible to be received from the particular device if the combination of the particular device with collected actual values of minutia is valid;

comparing the actual response from the particular device to the set of pre-processed responses; and

validating the combination of the particular device with the collected actual values if the actual response is included in the set of pre-processed responses for the particular device,

2. The method of claim **1**, wherein:

validating the combination of the particular device with the collected actual values enables one or more of authentication of the device, data protection for data transmitted to or from the device, or digital signature of a message digest.

3. The method of claim **1**, wherein:

customization of the particular device differentiates the particular device from a second device, wherein: the particular device is differentiated from the second device if the second device with a second set of actual values of minutia cannot be validated as the particular device with the collected actual values of minutia.

4. The method of claim **3**, wherein:

increasing customization of the particular device increases differentiation of the particular device from the second device.

5. The method of claim **1**, wherein:

validating the combination of the particular device with the collected actual values enables using the tracking of all known or projected updates of minutia to be used to update a device image for the particular device, without the actual response carrying any information about the current device image, and

a pattern of change in the device image is used with usage heuristics, consistency checks, or anomaly modeling for validating the combination of the particular device with the collected actual values.

6. The method of claim **1**, wherein:

validating the combination of the particular device with the collected actual values enables using the cryptographic key to decrypt the response, without the cryptographic key ever having been sent across any communication channel.

7. The method of claim **1**, wherein:

the set of minutia types includes one or more of hardware minutia, firmware minutia, software minutia, geo-location data, calling app data, user secrets, or biometric information.

8. The method of claim **1**, wherein:

selecting the subset from the set of minutia types changes from one time to the next.

9. The method of claim **1**, wherein:

a correspondence between values of minutia and the set of minutia types, from which the correspondence of values of minutia corresponding to the selected subset of minutia types is derived for the particular device, varies from device to device.

10. The method of claim **1**, further comprising:

providing a dynamic key crypto library to the device for encrypting an actual response to the challenge.

11. The method of claim **1**, wherein tracking updates of minutia includes:

tracking all known or projected updates by applying knowledge from the updates for selecting the subset of minutia types so that a pattern of change on the device can be detected, without the actual response carrying any information about the current device image, wherein

the pattern of change is used with usage heuristics, consistency checks, or anomaly modeling for validating the combination of the particular device with the collected actual values.

12. The method of claim **1**, wherein:

the subset is selected to include a computer minutia type and at least one of a user secret minutia type and a biometric minutia type; and

a digital signature is provided using the cryptographic key, without the cryptographic key ever having been sent across any communication channel.

13. A method comprising:

selecting at least one type of minutia from a plurality of minutia types;

forming a challenge that conveys the selection of minutia types;

computing a plurality of pre-processed responses possible to receive from a valid device, wherein:

each pre-processed response is computed using a key; and

each key is computed using values that are possible for the selection of minutia types;

sending the challenge to the device;

receiving an actual response to the challenge from the device, wherein:

the actual response is computed using an actual key;

the actual key is computed using:

a deduction of the selection of minutia types from the challenge; and

actual values of the selection of minutia types;

comparing the actual response to the pre-processed responses for a match; and

based on whether or not a match was found, validating the combination of the device with the actual values of the selection of minutia types.

14. The method of claim **13**, wherein selecting further comprises:

choosing the selection of minutia from a plurality of minutia including hardware minutia, firmware minutia, software minutia, geo-location data, calling app data, user secrets, or biometric information.

15. The method of claim **13**, wherein selecting further comprises:

choosing the selection of minutia to be a triplet of computer minutia types including a hardware minutia H, a firmware minutia F, and a software minutia S.

16. The method of claim **13**, further comprising:

choosing the selection of minutia according to a particular cataloging scheme of minutia.

17. The method of claim **13**, further comprising:

choosing the selection of minutia using expectations for changes to the current device image.

18. The method of claim **13**, further comprising:

choosing the selection of device minutia using knowledge of all industry updates that can occur on the device, whether or not actually occurring on the device.

19. The method of claim **13**, further comprising:

choosing the selection of device minutia using knowledge of changes actually occurring on the device, wherein:

changes actually occurring on the device are inferred from the pre-processed responses, and

no information about actual values of the minutia currently on the device is carried by the actual response to the challenge.

20. The method of claim **13**, wherein:

choosing the selection of device minutia includes choosing triplets according to a cataloging scheme that varies from one issuer of the challenge to another.

21. The method of claim **13**, further comprising:

using knowledge of the current device image to choose the selection of device minutiae.

22. The method of claim **13**, further comprising:

using the actual response to update knowledge of the current device image.

23. The method of claim **13**, wherein processing a range of possible changes to a current device image further comprises:

pre-processing all possible responses from the device independently of receiving the actual response from the device.

24. A system comprising a server configured to communicate with a device, wherein:

the server selects at least one type of minutia from a plurality of minutia types;

the server forms a challenge that conveys the selection of minutia types;

the server computes a plurality of pre-processed responses possible to receive from a valid device, wherein:

each pre-processed response is computed using a key; and

each key is computed using values that are possible for the selection of minutia types;

the server sends the challenge to the device;

the server receives an actual response to the challenge from the device, wherein:

the actual response is computed using an actual key;

the actual key is computed using:

a deduction of the selection of minutia types from the challenge; and

actual values of the selection of minutia types;

the server compares the actual response to the pre-processed responses for a match; and

based on whether or not a match was found, the server validates the combination of the device with the actual values of the selection of minutia types.

25. The system of claim **24**, wherein:

the second cryptographic key is varied by varying the selected set of minutia.

26. The system of claim **24**, wherein:

the set of minutiae is a triplet including a hardware minutia H, a firmware minutia F, and a software minutia S.

27. The system of claim **24**, wherein:

the server uses the actual response to update knowledge of the current device image without decoding any information about the current device image from the actual response.

28. The system of claim **24**, wherein:

the server pre-processes all possible responses from the device independently of receiving the actual response from the device to calculate the plurality of pre-processed responses.

29. The system of claim **24**, wherein:

the server uses knowledge of the current device image to select the set of minutiae.

30. A computer program product comprising a non-transitory computer readable medium having computer readable and executable code for instructing a processor to perform a method, the method comprising:

selecting at least one type of minutia from a plurality of minutia types;

forming a challenge that conveys the selection of minutia types;

computing a plurality of pre-processed responses possible to receive from a valid device, wherein:

each pre-processed response is computed using a key; and

each key is computed using values that are possible for the selection of minutia types;

sending the challenge to the device;

receiving an actual response to the challenge from the device, wherein:

the actual response is computed using an actual key;

the actual key is computed using:

a deduction of the selection of minutia types from the challenge; and

actual values of the selection of minutia types;

comparing the actual response to the pre-processed responses for a match; and

based on whether or not a match was found, validating the combination of the device with the actual values of the selection of minutia types.

31. The computer program product of claim **30**, wherein the method further comprises:

selecting the types of minutia from a plurality of types of computer minutia including hardware minutia H, firmware minutia F, or software minutia S.

32. The computer program product of claim **30**, wherein the method further comprises:

selecting the types of minutia according to a particular cataloging scheme of minutia.

33. The computer program product of claim **30**, wherein the method further comprises:

selecting the types of minutia using knowledge of all industry updates that can occur on the device, whether or not any particular update actually has occurred on the device.

34. The computer program product of claim **30**, wherein the method further comprises:

selecting the types of minutia using expectations for changes to the current device image.

* * * * *