IN THE UNITED STATES DISTRICT COURT
FOR THE EASTERN DISTRICT OF TEXAS
MARSHALL DIVISION

RIGHTQUESTION, LLC, Plaintiff, v. VERIZON BUSINESS NETWORK SERVICES LLC., et al, Defendants.	Civil Action No.: 2:24-cv-00091-JRG (Lead Case) **JURY TRIAL DEMANDED**
RIGHTQUESTION, LLC, Plaintiff, v. AT&T CORP., et al, Defendants.	Civil Action No.: 2:24-cv-00094-JRG (Member Case) **JURY TRIAL DEMANDED**

DEFENDANTS' OPPOSITION TO PLAINTIFF RIGHTQUESTION, LLC'S
MOTION FOR LEAVE TO AMEND INFRINGEMENT CONTENTIONS

TABLE OF CONTENTS

Page

I. BACKGROUND 4
II. LEGAL STANDARD 6
III. ARGUMENT 7
A. RightQuestion cannot show good cause for amending its infringement contentions at this late stage of discovery. 7
B. Defendants would be unduly prejudiced if the Motion is granted. 11
C. All Other Factors Support Denial 13
IV. CONCLUSION 14

EX-1025
AT&T SERVICES INC., CELLCO PARTNERSHIP D/B/A VERIZON WIRELESS, AND NOKIA OF AMERICA CORPORATION v. RIGHTQUESTION, LLC
000002

TABLE OF AUTHORITIES

Federal Cases

Barry v. Medtronic, Inc., No. 1:14-CV-104, 2016 WL 7665768 (E.D. Tex. May 9, 2016).....12

Charles E. Hill & Associates Inc. v. Ambercrombie & Fitch Co, No. 2:07-CV-234, 2009 WL 10677610 (E.D. Tex. Apr. 17, 2009).....13

Computer Acceleration Corp. v. Microsoft Corp., 481 F.Supp.2d 620 (E.D. Tex. 2007).....6

Computer Acceleration Corp. v. Microsoft Corp., 503 F. Supp. 2d 819 (E.D. Tex. 2007).....7

Connectel, LLC v. Cisco Sys., Inc., 391 F. Supp. 2d 526 (E.D. Tex. 2005) 6, 11

DataTreasury Corp. v. Wells Fargo & Co., No. 2:05-CV-291, 2009 WL 10677805 (E.D. Tex. May 13, 2009)..... 7-8, 10

Finisar Corp. v. DirecTV Grp., Inc., 424 F.Supp.2d 896 (E.D. Tex. 2006).....6, 12

Iovate Health Scis., Inc. v. Bio-Engineered Supplements & Nutrition, Inc., No. 9:07-cv-46, 2008 WL 11344914 (E.D. Tex. Aug. 7, 2008) 6

Motorola, Inc. v. Analog Devices, Inc., No. 1:03-CV-131, 2004 WL 5633735 (E.D. Tex. Apr. 8, 2004).....6

O2 Micro Int'l Ltd. v. Monolithic Power Sys., Inc., 467 F.3d 1355 (Fed. Cir. 2006).....6

Tivo Inc. v. Samsung Elecs. Co., Ltd., No. 2:15-cv-1503-JRG, 2016 WL 5172008 (E.D. Tex. July 22, 2016) 6-7

EX-1025
AT&T SERVICES INC., CELLCO PARTNERSHIP D/B/A VERIZON WIRELESS, AND NOKIA OF AMERICA CORPORATION v. RIGHTQUESTION, LLC
000003

RightQuestion's proposed amendments to its infringement contentions are very different than characterized in its Motion. Rather than merely adding references to discovery obtained later in the case, such as from third parties HIYA or TNS, the contentions:

1. introduce completely new infringement theories, some of which are diametrically opposed to those in the operative infringement contentions; and
2. add block citation to evidence without any explanation and for the apparent purpose of creating a placeholder for further amendments at the expert report stage.

The first issue is most obviously illustrated by considering RightQuestion's current theory and proposed new theory for claim 1 of the '009 Patent. For context, claim 1 requires a first device that enrolls with a verification service provider ("VSP") and provides a device fingerprint to the VSP. Then when a call comes into a second device, the fingerprint can be compared to the fingerprint of the device making the call to assess whether there is a match. The Court may recall that this claim was one of the two focuses of the April 30, 2025, *Markman* hearing.

Under RightQuestion's operative contentions, the claimed "first device" is the calling device; the claimed "second device" is the device being called; and the VSP is third party call analytics providers, HIYA (AT&T) and TNS (Verizon):

1[b] enroll a first device with the verification service provider, wherein enrolling the first device includes associating, by the verification service provider, the first device with a device fingerprint that is generated based at least in part on a set of configuration information associated with the first device;	The Accused Instrumentalities comprise one or more processors configured to enroll a first device with the verification service provider, wherein enrolling the first device includes associating, by the verification service provider, the first device with a device fingerprint that is generated based at least in part on a set of configuration information associated with the first device. The enrolling of the first device includes associating, by the verification service provider, the first device with a device fingerprint. RQ-ATT0000035-RQ-ATT0000041 (https://www.att.com/security/); RQ0002113-RQ0002120 (https://transnexus.com/whitepapers/understanding-stir-shaken/). The device fingerprint is generated based at least in part on a set of configuration information associated with the first device. As one example, the verification service provider enrolls a first device ("calling party", indicated with orange box). RQ0002113-RQ0002120(https://transnexus.com/whitepapers/understanding-stir-shaken/): RQ-ATT0000035-RQ-ATT0000041 (https://www.att.com/security/).

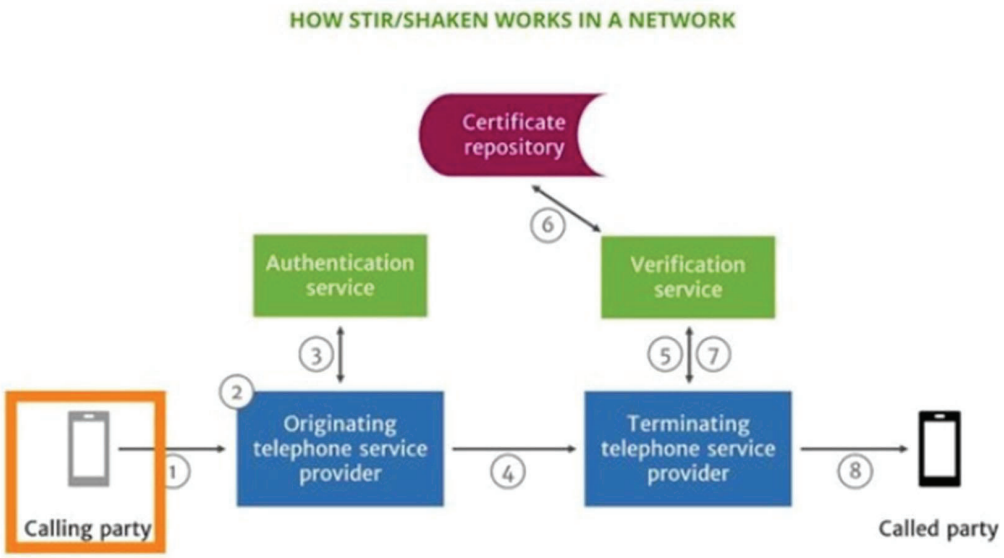

See e.g., RightQuestion's First Amended Infringement Contentions to AT&T (Served 10.7.2024) at pp. 22-23 ("a first device ("calling party", indicated with orange box")).

In the proposed amended contentions, the VSP remains the same, but with respect to the remainder of the claim limitations, RightQuestion flips its earlier contention on its head and treats the "first device" as the device being called; and the "second device" as the calling device:

Furthermore, the Accused Instrumentalities comprise one or more processors configured to obtain, at the verification service provider (e.g., Hiya), information transmitted by a second device (e.g., a calling device) associated with a communications connection.

For example, Hiya servers comprise one or more processors configured to obtain information transmitted by a second device. The second device is a calling device. The calling device sends a SIP Invite message to establish a phone call with a callee device. The communications connection is the connection between the caller device and AT&T's network during call setup, and/or is the connection between the caller and callee device.

The caller device (second device) transmits a SIP Invite to initiate a telephone call. The SIP Invite includes both the caller's phone number (e.g., in the From header) and callee's phone number (e.g., in the request line, To header, and/or P-Asserted-Identity header). This information is received by Hiya in a CallDirectionRequest.

See e.g., RightQuestion's Proposed Second Amended Infringement Contentions to AT&T (Served 4.28.2025) at p. 55. *See also* RightQuestion's First Amended Infringement Contentions to Verizon

EX-1025
AT&T SERVICES INC., CELLCO PARTNERSHIP D/B/A VERIZON WIRELESS, AND NOKIA OF AMERICA CORPORATION v. RIGHTQUESTION, LLC
000005

(Served 10.7.2024) at pp. 26-27 ("As one example, the verification service provider enrolls a first device ("calling party", indicated with orange box)); *in contrast to* RightQuestion's Proposed Second Amended Infringement Contentions to Verizon (Served 4.28.2025) at p. 55 ("a second device (e.g., a calling device)." RightQuestion's two diametrically opposed infringement theories are illustrated in Exhibit A.

Notably, this change in theory reflects something far different than the addition of evidence, as RightQuestion argues. Rather, it is a new theory that contradicts RightQuestion's current operative theory and had this new theory been raised earlier in the case, it necessarily would have created claim construction disputes (*i.e.*, first device; second device) because the theory also contradicts the intrinsic record. Based on RightQuestion's delay, none of these issues were addressed at the April 30, 2025, *Markman* hearing. Likewise, RightQuestion's choice to defer raising this theory until the end of fact discovery also deprived Defendants of sufficient notice to search for prior art related to this contradictory claim interpretation. Finally, RightQuestion's claims regarding source code revealing "for the first time critical operation and functionality" is false. Defendants produced documents that detailed the operation of their respective systems throughout this case that are, and have always been, consistent with any source code productions.

Turning to the second issue, *i.e.*, RightQuestion's use of unexplained block citation to evidence (such as source code), the fact that it is an improper placeholder is most obviously illustrated by considering RightQuestion's citation to AT&T code at pages 61-74 of the '989 Patent claim chart. Not only does this source code citation lack any explanation of relevance, RightQuestion cites 2,158 pages of code. None of this code was requested for printing until more than a week after the Motion was filed. More importantly, the Court's Protective Order permits only 1,500 printed pages of source code: "In no event may the Receiving Party print . . . an

EX-1025
AT&T SERVICES INC., CELLCO PARTNERSHIP D/B/A VERIZON WIRELESS, AND NOKIA OF AMERICA CORPORATION v. RIGHTQUESTION, LLC
000006

aggregate total of more than 1500 pages, for each Producing Party's Source Code". See Dkt. 40 at Sec. 10(m). For AT&T, RightQuestion sought production of only 153 pages of code, which is a fraction of the 2,000+ pages it cites in the proposed amended contentions. This is a blatant effort to hide the needle in the haystack, rather than provide Defendants actual notice of an infringement theory, or support for that theory. A similar argument can be made with respect to the other newly cited code from Nokia, Hiya, etc., because those citations also lack any explanation of relevance.

The Court should reject RightQuestion's effort to expand its case through the direct introduction of new theories and the thinly-veiled, indirect introduction of new theories through block citation to evidence in the eleventh hour of this case.

I. BACKGROUND

During the Parties' meet and confer on May 1, 2025, counsel for AT&T and Verizon explained that there appears to be five buckets of amendments that RightQuestion proposes to make. Using the AT&T contentions as an example, the buckets include:

1. New infringement theories reflecting new claim interpretation (*see, e.g.*, '009 Patent, pp. 21-22, 35-36, 44, 55, 64-65, 87, 100-101, and 122-123; '989 Patent, pp. 53-54, 86, 96, 98-99, 172, 180, 198-200, 231-232, 294, 304-305, 313, and 327-429; and '132 Patent, pp. 22-23, 40, 44-50, 71, 103-104, 119-120, 123-124, and 264-266);

2. Bulk reference to source code without any explanation (*see, e.g.*, '009 Patent., pp. 200-219), 55-56, 67-69; '989 Patent, pp. 61-74 and 86-96; '132 Patent, pp. 23-38);

3. Block citing documents (*see, e.g.*, '989 Patent, p 16 of redline that adds over 30 documents, some of which are cited multiple times without any explanation);

4. References to contractual arrangements (*see, e.g.*, '009 Patent., 22-23; '989 Patent, pp. 74-75; '132 Patent, pp. 38-39); and

5. Seemingly unnecessary corrections *(see, e.g.*, '009 Patent, p. 1 of redline; '989 Patent, p. 35 of redline; and '132 Patent, p. 10 of redline).

EX-1025
AT&T SERVICES INC., CELLCO PARTNERSHIP D/B/A VERIZON WIRELESS, AND NOKIA OF AMERICA CORPORATION v. RIGHTQUESTION, LLC
000007

As Defendants explained, their opposition to the proposed amendments apply to the first three buckets.[1]

With respect to the first bucket, RightQuestion's new theories are based on a new claim interpretation that conflicts with its prior claim interpretations. For example, RightQuestion's current theory for claim 1 of the '009 Patent, associates the calling device with the first device and the callee device with the second device. RightQuestion appears to retain that theory and at the same time make a new theory, according to which the calling device is the second device and the callee device is the first device. *See* Exhibit A. Not only do these theories inherently conflict, but the theories also implicate new claim construction issues (*e.g.*, first device, second device, "information . . . associated with a communication connection", etc.). RightQuestion's belated claim re-interpretation would be prejudicial to Defendants absent them being given a fair opportunity to provide invalidity contentions responsive to this new theory.

With respect to the second and third buckets, RightQuestion proposes to add extensive, generic, and unexplained references to source code functions and other documents. As previously explained, the source code citations mostly span several pages without any explanation as to their relevance and are repeated across numerous claim limitations. They seem to have been added in bulk so that RightQuestion later can argue that its infringement expert has a foothold for a wide range of opinions despite those opinions not actually conforming to specific arguments in the contentions. This is plainly improper and against the Local Patent Rules. Instead, RightQuestion should have identified specific code relevant to the claim limitation and at least some explanation as to the relevance. The same is true for the bulk document citations.

[1] *See* Exhibit B (email from Matt Yungwirth recapping meet and confer).

EX-1025
AT&T SERVICES INC., CELLCO PARTNERSHIP D/B/A VERIZON WIRELESS, AND NOKIA OF AMERICA CORPORATION v. RIGHTQUESTION, LLC
000008

II. LEGAL STANDARD

Local Patent Rule 3-6(a) deems a party's initial infringement contentions to be that party's final contentions. *See* P.R. 3-6(a). "[T]hat a party state [its] preliminary infringement contentions shortly after the initial case management conference is specifically designed to require parties to crystalize their theories of the case, and to prevent a 'shifting sands" approach to patent litigation." *Motorola, Inc. v. Analog Devices, Inc.*, No. 1:03-CV-131, 2004 WL 5633735, at *1 (E.D. Tex. Apr. 8, 2004). The "Patent Rules demonstrate high expectations as to plaintiff's preparedness before bringing suit," as plaintiffs are required to "rigorously analyze all publicly available information before bringing suit and … explain with great detail their theories of infringement." *Connectel, LLC v. Cisco Sys., Inc.,* 391 F. Supp. 2d 526, 527-528 (E.D. Tex. 2005) (quotations and citations omitted). The Local Patent Rules are designed to ensure that parties formulate their infringement and invalidity theories early in the case and not make "eleventh-hour alterations" in their positions, subjecting their opposing party to additional delay, expense, and potential prejudice. *See Iovate Health Scis., Inc. v. Bio-Engineered Supplements & Nutrition, Inc.*, No. 9:07-cv-46, 2008 WL 11344914, at *2 (E.D. Tex. Aug. 7, 2008); *Computer Acceleration Corp. v. Microsoft Corp.*, 481 F.Supp.2d 620, 624 (E.D. Tex. 2007*); Finisar Corp. v. DirecTV Grp., Inc.*, 424 F.Supp.2d 896, 900–01 (E.D. Tex. 2006).

For at least these reasons, "[a]mendment or supplementation of any Infringement Contentions ... may be made only by order of the Court, which shall be entered only upon a showing of good cause." P.R. 3-6(b). To determine whether the patentee has shown good cause to amend its infringement contentions, this Court generally considers "(1) the explanation for the party's failure to meet the deadline, (2) the importance of what the court is excluding, (3) the potential prejudice if the court allows that thing that would be excluded, and (4) the availability of a continuance to cure such prejudice." *Tivo Inc. v. Samsung Elecs. Co., Ltd.*, No. 2:15-cv-1503-

EX-1025
AT&T SERVICES INC., CELLCO PARTNERSHIP D/B/A VERIZON WIRELESS, AND NOKIA OF AMERICA CORPORATION v. RIGHTQUESTION, LLC
000009

JRG, 2016 WL 5172008, at *4 (E.D. Tex. July 22, 2016) (internal quotation marks omitted). Further, the Federal Circuit has held that "'good cause' requires a showing of diligence," and that the burden is on the party seeking leave to amend to prove its diligence. *O2 Micro Int'l Ltd. v. Monolithic Power Sys., Inc.*, 467 F.3d 1355, 1366 (Fed. Cir. 2006). These same "good cause" factors are considered when determining whether infringement contentions should be struck. *See Computer Acceleration Corp. v. Microsoft Corp.*, 503 F. Supp. 2d 819, 822 (E.D. Tex. 2007); *DataTreasury Corp. v. Wells Fargo & Co.*, No. 2:05-CV-291, 2009 WL 10677805, at *2 (E.D. Tex. May 13, 2009).

III. ARGUMENT

The Court should deny RightQuestion's Motion because RightQuestion does not meet its burden of showing good cause, Defendants would be prejudiced if the motion is granted, and all other factors support denial.

A. RightQuestion cannot show good cause for amending its infringement contentions at this late stage of discovery.

As explained above, RightQuestion sought to amend its infringement contentions two days before the April 30, 2025 *Markman* Hearing. The parties met and conferred on May 1, 2025, during which Defendants presented arguments and objections regarding (1) the untimely nature of the proposed amendments and (2) RightQuestion's introduction of entirely new theories – some of which are entirely opposite to positions they have maintained throughout this litigation. Despite this, RightQuestion's Motion fails to engage with the substance of Defendants' objections. Instead, RightQuestion ignores the issues raised and attempts to justify its amendments through a strawman argument centered on alleged late discovery. RightQuestion's explanation misrepresents the actual dispute and sidesteps the procedural and substantive deficiencies identified by Defendants.

EX-1025
AT&T SERVICES INC., CELLCO PARTNERSHIP D/B/A VERIZON WIRELESS, AND NOKIA OF AMERICA CORPORATION v. RIGHTQUESTION, LLC
000010

The actual dispute is RightQuestion's introduction of new infringement theories under the guise of recently made available source code. As mentioned above, RightQuestion flips its prior theory, which is in direct conflict with the specification for the '009 Patent. *See e.g.*, '009 Patent at 2:42-43 ("Described herein are techniques for ascertaining the identity of a device initiating a communication."); 2:59-3:3 ("When contacting callee 118, automatic number identification (ANI) data, such as caller id, for the calling device 102 is presented to the callee. In this example, verification service provider 120 is requested by the callee to verify the automatic number identification data of device 102, for example, to make a security determination as to whether the ANI data is being spoofed."); 9:17-18 ("the calling device is enrolled with the verification service provider"); 10:48-56 ("the verification process confirms that the phone is used to call the callee device that received the caller id associated with the caller"). RightQuestion's proposed theory, where the calling device is the second device and the callee device is the first device, requires the callee device to be registered with the VSP where that registration involves optionally giving third parties, TNS or Hiya, access to the callee's address book. Then, when the calling device makes a call, the VSP checks the calling number against the stored address book of the callee and the third party considers whether the calling number is in the address book as part of the analysis of the call. This is plainly inconsistent with the specification of the Asserted Patents which only discusses enrolling and verifying the of a device initiating a communication. '009 Patent at 2:42-43.

For the '989 Patent, RightQuestion's operative infringement contentions for the claim element, "a value generated based at least in part on information associated with the calling device", consistently pointed to information specific to the calling device. *See e.g.*, Plaintiff's First Amended Infringement Contentions to AT&T at p. 27 ("For example, the value generated based at least in part on information associated with the calling device can include a device fingerprint,

EX-1025
AT&T SERVICES INC., CELLCO PARTNERSHIP D/B/A VERIZON WIRELESS, AND NOKIA OF AMERICA CORPORATION v. RIGHTQUESTION, LLC
000011

device information (*e.g.,* make, model, serial number, operating system version, application information, or other identifying information of a device), customer account information, location information, caller or callee number, or other information associated with the device and upon which (or upon verification of which) a security determination is in part based"). For the first time, Plaintiff proposes that "a value generated based at least in part on information associated with the calling device" is something wholly unrelated to the device itself. *See e.g.*, Plaintiff's Proposed Second Amended Infringement Contentions to AT&T at p. 53 ("For example, the Accused Instrumentalities receive a telephone number of a calling device, a STIR/SHAKEN PASSporT, and a verstat value – each of which are values pertaining to a call initiated by a calling device, are generated based at least in part on information associated with the calling device, and verified per the claimed security determination.). First, discovery on STIR/SHAKEN information such as the PASSport and verstat value has been provided since day one of discovery, and nothing relating to source code would necessitate a change in the infringement theory. Second, STIR/SHAKEN is federally mandated industry standard issued by the Federal Communications Commission, and information about this service has been publicly available since its inception on June 30, 2021 – well before the Complaint in this case was filed.

Plaintiff's initial theory of infringement for the '132 Patent claims relied on a construction of the term "device information" consistent with the specification of the Asserted Patents. Specifically, Plaintiff stated in their First Amended Infringement Contentions that "device information associated with a caller device includes a device information (*e.g.*, make, model, serial number, operating system version, application information, or other identifying information of a device), customer account information, location information, or other information associated with the caller device." Plaintiff now proposes that "device information" can simply be a phone number,

EX-1025
AT&T SERVICES INC., CELLCO PARTNERSHIP D/B/A VERIZON WIRELESS, AND NOKIA OF AMERICA CORPORATION v. RIGHTQUESTION, LLC
000012

which is not device information nor tied to any specific device. *See e.g.*, Plaintiff's Proposed Second Amended Infringement Contentions to AT&T at p. 22 ("(2) a telephone number, which is an example of device information associated with the caller device"). To reiterate, the purpose of the Asserted Patents is to detect potential spoofing of a caller's telephone number. *See* '989 Patent 2:43-46; '009 Patent 2:41-45; '132 Patent 2:46-50. The term "device information", along with other terms referenced above, is now clearly in dispute. As a result, Defendants were deprived the opportunity to present prior art invalidity arguments and to challenge the meaning of these terms during claim construction.

Furthermore, each of RightQuestion's new infringement theories are futile. Putting aside RightQuestion's illogical argument related to enrolling the person being called to verify the caller for the '009 Patent, Defendants do not perform enrollment with a VSP, do not use device fingerprints, and certainly do not consider configuration information associated with a device in their respective systems, as required by the claims. Similarly, for the '989 Patent, Defendants do not use a "value" based on "information associated with the calling device", and a score is not generated "for the calling device." Likewise, Plaintiff's new theories for the '989 and '132 Patents rely on performing a security determination based on information derived from a phone number (STIR/SHAKEN is specific to a calling parties phone number), when the entire purpose of the Asserted Patents is to detect attempts to spoof a phone number. *See* '989 Patent at 2:43-46 ("Using the techniques described herein, potential attempts at spoofing of caller ID or automatic number identification (ANI) data (or any other type of caller identification) can be detected."). For the '132 Patent, Defendants do not use "device information", and neither Hiya nor TNS "receive" any type of cryptographic element that is used to perform a "security determination", as required by the claims.

EX-1025
AT&T SERVICES INC., CELLCO PARTNERSHIP D/B/A VERIZON WIRELESS, AND NOKIA OF AMERICA CORPORATION v. RIGHTQUESTION, LLC
000013

RightQuestion seeks to materially and substantively change the operative theories, which were relied upon by Defendants to create their defenses, and to litigate a very different case starting at the 11th hour. These changes are fundamental departures from the original positions that shaped the claim construction process and informed Defendants on their strategy, "[s]pecific theories create a specific trajectory for the case…. [W]hen parties formulate, test, and crystallize their infringement theories before stating their preliminary infringement contentions … the case takes a clear path, focusing discovery on building precise final infringement or invalidity contentions and narrowing issues for *Markman,* summary judgment, trial, and beyond." *Connectel, LLC.*, 391 F. Supp. 2d at 527. By waiting until the end of discovery to amend its infringement theories, RightQuestion threatens the clear, focused path that both parties were following prior to the instant Motion. For these reasons, RightQuestion has not demonstrated good cause to justify amending its infringement contentions.

B. Defendants would be unduly prejudiced if the Motion is granted.

RightQuestion boldly asserts that the amended infringement contentions would have "no bearing on the claim construction issues." Motion, p. 8. However, RightQuestion's proposed amendment introduces new theories of infringement, as set forth above, that implicate different claim terms and shift the scope of terms that had not previously been in dispute. The most prevalent example is RightQuestion's switching of what qualifies as a first device and a second device. RightQuestion's shift in its position would require additional and alternative constructions. This would affect the extrinsic and intrinsic evidence the Court would have to view and consider. While RightQuestion contends that source code was necessary to land upon its new theories, it fails to demonstrate that necessity within its Motion.

Furthermore, RightQuestion's proposed amendments would severely impede Defendants' ability to conduct discovery on the new theories. Defendants have relied on RightQuestion's

EX-1025
AT&T SERVICES INC., CELLCO PARTNERSHIP D/B/A VERIZON WIRELESS, AND NOKIA OF AMERICA CORPORATION v. RIGHTQUESTION, LLC
000014

infringement contentions to shape its discovery strategy. The newly asserted theories implicate different aspects of the accused products that were not previously identified. For example, the second document produced by AT&T in July 2024, provides details on sharing address book related information from the mobile application, which almost one year after its disclosure is now the central theme to Plaintiff's new infringement theories for the '009 Patent. *See* ATT-RQ_0000042 at 44. Defendants will be deprived of the opportunity to explore prior art for their invalidity defenses and non-infringement positions responsive to the new theories. The newly asserted theories shift the focus of how RightQuestion contends the claims read on the accused products, which directly and materially impacts Defendants' ability to rely on prior art. New theories at this stage would require Defendants to reevaluate its prior art references and possibly identify and disclose entirely new references, which could in turn implicate and disrupt pending expert reports.

Fact discovery is also rapidly approaching, and as of the date of this submission, only nine days will remain before the deadline for completion. *See Barry v. Medtronic, Inc.*, No. 1:14-CV-104, 2016 WL 7665768, at *1 (E.D. Tex. May 9, 2016) (finding that defendant would be unfairly prejudiced by the requested amendments, which were submitted twelve days before the close of fact discovery and two months after the court construed the claims). The parties have completed claim construction briefing and the Court is preparing to issue it claim construction order. Even if additional time were granted, Defendants would be forced to reopen and repeat substantial portions of discovery, such as claim construction. Defendants would also have to expend significant time and resources to address theories that Plaintiff could (and should) have disclosed earlier. *Finisar Corp.*, 424 F. Supp. 2d at 901–02 (finding prejudice where amendment would add additional expense for new expert theories and extend discovery deadlines). RightQuestion's proposed

EX-1025
AT&T SERVICES INC., CELLCO PARTNERSHIP D/B/A VERIZON WIRELESS, AND NOKIA OF AMERICA CORPORATION v. RIGHTQUESTION, LLC
000015

amendments directly affect the framework of this case by altering the scope and interpretation of the claims. As such, the Court should deny the Motion.

C. All Other Factors Support Denial

While courts have found that "diligence and undue prejudice are the dispositive factors," courts may also look to the importance of information and availability of a continuance in deciding whether to grant leave to amend contentions. *Charles E. Hill & Assocs., Inc. v. Abercrombie & Fitch Co.,* No. 2:07-CV-234, 2009 WL 10677610, at *2 (E.D. Tex. Apr. 17, 2009).

Aside from a series of conclusory statements and vague references to "recently-produced evidence," RightQuestion fails to provide a substantive explanation demonstrating the significance of the information. Plainly, RightQuestion fails to discuss how the source code supports the need for including changes to their infringement theories. Moreover, RightQuestion is not in compliance with this Court's Patent Rule 3-1, which requires RightQuestion to state "specific theories of infringement". All the original infringement theories are still in the contentions. This fails to "identify[] specifically where each element of each asserted claim is found" as required by P.R. 3-1(c). RightQuestion seeks to add multiple, alternate theories without clarification or designation of a primary or specific theory, thus RightQuestion's infringement contentions are overbroad, wholly inconsistent, and fail to provide Defendants with actual notice. Furthermore, if RightQuestion is allowed to assert its multiple, inconsistent theories of infringement for the same claim element it forces Defendants to defend against a moving target. Therefore, RightQuestion has failed to demonstrate the importance of its additions.

Lastly, for the reasons discussed in detail above, a continuance would be necessary for Defendants to be able to investigate and formulate its defenses for the new infringement theories. In the event the Court determines that the motion should be granted, Defendants request at least 45 days to serve amended invalidity contentions, followed by or concurrent with a supplemental

EX-1025
AT&T SERVICES INC., CELLCO PARTNERSHIP D/B/A VERIZON WIRELESS, AND NOKIA OF AMERICA CORPORATION v. RIGHTQUESTION, LLC
000016

claim construction process through which the parties can address claim construction issues arising out of the new theories proposed by RightQuestion (*e.g.*, "first device", "second device", "enroll", "a value generated based at least in part on information associated with the calling device", "a score generated for the calling device", "device information", "device information associated with a caller device", "receiving . . a cryptographic element associated with the caller device", "cryptographic element.").

IV. CONCLUSION

As discussed above, Defendants oppose RightQuestion's Motion for Leave to Amend Infringement Contentions and respectfully request that the Court deny RightQuestion's Motion.

Dated: May 21, 2025

Respectfully submitted

/s/ *Matthew S. Yungwirth*

Deron R. Dacus (TBN 00790553)
ddacus@dacusfirm.com
THE DACUS FIRM, P.C.
821 ESE Loop 323, Suite 430
Tyler, TX 75701
Tel: (903) 705-7233
Fax: (903) 581-2543

Matthew S. Yungwirth
msyungwirth@duanemorris.com
Alice E. Snedeker
aesnedeker@duanemorris.com
Glenn D. Richeson
gdricheson@duanemorris.com
DUANE MORRIS LLP
1075 Peachtree Street NE, Suite 1700
Atlanta, GA 30309-3929
Tel: (404) 253-6900
Fax: (404) 253-6901

Elissa L. Sandford
esandford@duanemorris.com
DUANE MORRIS LLP
901 New York Ave NW, Suite 700
Washington, DC 20001-4795

EX-1025
AT&T SERVICES INC., CELLCO PARTNERSHIP D/B/A VERIZON WIRELESS, AND NOKIA OF AMERICA CORPORATION v. RIGHTQUESTION, LLC
000017

Tel: (202) 776-5231
Fax: (202) 478-5042

Attorneys for AT&T Defendants

/s/ *Brian H. Pandya*
Deron R Dacus
ddacus@dacusfirm.com
THE DACUS FIRM, PC
821 ESE Loop 323, Suite 430
Tyler, TX 75701
Telephone: (903) 705.1117

Kevin P. Anderson
kpanderson@duanemorris.com
Brian H. Pandya
bhpandya@duanemorris.com
DUANE MORRIS LLP
901 New York Ave. NW, Suite 700-East
Washington, DC 20001
Telephone: 202.776.7800
Facsimile: 202.478.2811

Jayla C. Grant
jcgrant@duanemorris.com
DUANE MORRIS LLP
1075 Peachtree Street NE, Suite 1700
Atlanta, GA 30309-3929
Tel: (404) 253-6900
Fax: (404) 253-6901

Counsel for Verizon Defendants

EX-1025
AT&T SERVICES INC., CELLCO PARTNERSHIP D/B/A VERIZON WIRELESS, AND NOKIA OF AMERICA CORPORATION v. RIGHTQUESTION, LLC
000018

CERTIFICATE OF SERVICE

The undersigned hereby certifies that all counsel of record who are deemed to have consented to electronic service are being served with a copy of this document via the Court's CM/ECF system per Local Rule CV-5(a)(3) on May 21, 2025.

/s/ Brian Pandya

EX-1025
AT&T SERVICES INC., CELLCO PARTNERSHIP D/B/A VERIZON WIRELESS, AND NOKIA OF AMERICA CORPORATION v. RIGHTQUESTION, LLC
000019

EXHIBIT A

EXHIBIT B

From: Yungwirth, Matthew S.
Sent: Friday, May 2, 2025 8:55 PM
To: Nicki Glauser
Cc: KramerAlberti-RightQuestion; Andrea Fair; Heidi Peterson; Ashley Hodson; Richeson, Glenn; Rollins, David J.; Sanford, Elissa; Snedeker, Alice; ~Dacus, Deron; Anderson, Kevin; Pandya, Brian H.
Subject: RE: RightQuestion v AT&T - Plaintiff's Second Amended Infringement Contentions

Nicki –

We write to confirm AT&T's and Verizon's position expressed during the meet and confer yesterday. As we explained, there appears to be five buckets of amendments that RightQuestion proposes to make. Using the AT&T contentions as an example, the buckets include:

1. New infringement theories based on new claim interpretations (*see, e.g.*, '009 Patent, pp. 21-22, 35, 44, 64; '989 Patent, pp. 53-54 and 98-99; and '132 Patent, pp. 264-266);
2. Bulk references to source code without any explanation (*see, e.g.*, '009 Patent., pp. 200-219 (19 pages worth), 55-56, 67-69; '989 Patent, pp. 61-74 (i.e., 13 pages of source code references) and 86-96; '132 Patent, pp. 23-38 (i.e., 14 pages of source code references));
3. Block citing documents (*see, e.g.*, '989 Patent, p 16 of redline that adds over 30 documents and some are cited multiple times w/o any explanation);
4. References to contractual arrangements (*see, e.g.*, '009 Patent., 22-23; '989 Patent, pp. 74-75; '132 Patent, pp. 38-39); and
5. Seemingly unnecessary corrections *(see, e.g.*, '009 Patent, p. 1 of redline; '989 Patent, p. 35 of redline; and 132 Patent, p. 10 of redline).

As we explained, we object to RightQuestion's proposed amendment with respect to at least the first three buckets.

With respect to the first bucket, RightQuestion's new theories are based on a new claim interpretation that conflicts with its prior claim interpretations. For example, RightQuestion's current theory for claim 1 of the '009 Patent, associates the calling device with the first device and the callee device with the second device. RightQuestion appears to retain that theory and at the same time make a new theory according to which the calling device is the second device and the callee device is the first device. Not only do these theories conflict, the new theory implicates new claim construction issues (*e.g.*, first device, second device, "information . . . associated with a communication connection", etc.). RightQuestion's belated claim re-interpretation also would be prejudicial to Defendants absent them being given a fair opportunity to provide invalidity contentions responsive to this new theory.

With respect to the second and third buckets, RightQuestion proposes to add extensive, generic and unexplained references to source code functions and other documents. As we explained the source code citations mostly span several pages without any explanation as to their relevance and are repeated across numerous claim limitations. They seem to have been added in bulk so that RightQuestion later can argue that its infringement expert has a foothold for a wide range of opinions despite those opinions not actually conforming to specific arguments in the contentions. We contend that this is improper and if RightQuestion wants to add reference to the source code, it should have identified specific code relevant to the claim limitation and at least some explanation as to the relevance. The same is true for the bulk document citation.

For at least these reasons, Defendants oppose RightQuestion's proposed amendments.

Matt

EX-1025
AT&T SERVICES INC., CELLCO PARTNERSHIP D/B/A VERIZON WIRELESS, AND NOKIA OF AMERICA CORPORATION v. RIGHTQUESTION, LLC
000022

Matthew Yungwirth
Duane Morris LLP
404-253-6935

From: Shannon Mason <smason@krameralberti.com>
Sent: Monday, April 28, 2025 9:35 PM
To: DM-ATT-RQ <DM-ATT-RQ@duanemorris.com>
Cc: KramerAlberti-RightQuestion <KramerAlberti-RightQuestion@krameralberti.com>; Andrea Fair <andrea@millerfairhenry.com>; Heidi Peterson <heidi@millerfairhenry.com>; Ashley Hodson <ashley@millerfairhenry.com>
Subject: RightQuestion v AT&T - Plaintiff's Second Amended Infringement Contentions

Counsel,

Please use the link below to access RightQuestion's Second Amended Infringement Contentions (clean and redline versions), which have been designated as RESTRICTED – CONFIDENTIAL SOURCE CODE under the Protective Order entered in this matter. The password will be provided in a separate email.

2025 04-28 RQ's Second Amended ICs (ATT) - RESTRICTED CONFIDENTIAL SOURCE CODE.zip

RightQuestion intends to move for leave to amend no later than Friday, May 2. Accordingly, please let us know what time on or before May 2 you are available for a lead-local conference in order to provide your position of opposition or non-opposition. Given that the parties will be attending the Markman hearing this week, counsel for RightQuestion proposes an in-person meet and confer after the conclusion of the Markman hearing on Wednesday, April 30.

Best,
Shannon

Shannon Mason
Senior Paralegal
Kramer Alberti Lim & Tonkovich LLP
500 W 2nd Street, Suite 1900
Austin, Texas 78701
Office: 650.825.4300 x140
Email: smason@krameralberti.com
Website: krameralberti.com

Silicon Valley – New York – Austin – Washington, D.C.

First Amended Infringement Contentions excerpts as applied to Fig. 1 of Asserted Patents:	Proposed Second Amended Infringement Contentions excerpts as applied to Fig. 1 of Asserted Patents:
"As one example, the **verification service provider** enrolls a **first device ("calling party", indicated with orange box)**." "The Accused Instrumentalities, […] **enroll a first device (showing as "calling party" and identified with an orange box)**. Enrollment of **the first device** includes generation of **a device fingerprint** based at least in part on a set of configuration information [. . .] (e.g., SIM-based, credential-based, or line based authentication)." "As another example, a security determination is performed at least in part by determining whether the obtained information transmitted **by the second device** matches at least a portion of the **stored device fingerprint** that was generated based at least in part on the set of configuration information associated with the **enrolled first device** to determine how to attest for the validity of the calling number." First Amended Infringement Contentions (to AT&T at pp. 23, 53-54; to Verizon at pp. 26-27, 50 (citations annotated).	"the Accused Instrumentalities […] **enroll a first device [i.e., the called device]** with the **verification service provider** (e.g., Hiya), wherein **enrolling the first device** includes associating, by the **verification service provider**, **the first device** with a **device fingerprint** that is generated based at least in part on a set of configuration information associated with **the first device**." "obtain, at the **verification service provider** (e.g., Hiya), information transmitted by **a second device (e.g., a calling device)** [. . .] ." "the Accused Instrumentalities [. . .] perform, at the **verification service provider** (Hiya), [. . .] determining whether the obtained information transmitted by the **second device** (e.g., caller and callee phone numbers) matches at least a portion of the **stored device fingerprint** [. . .] associated with the **enrolled first device (e.g., the hashed telephone numbers generated from the first device's address book)**." Proposed Second Amended Infringement Contentions (to AT&T at pp. 55, 64; to Verizon at pp. 54, 78, 87-88 (citations annotated).
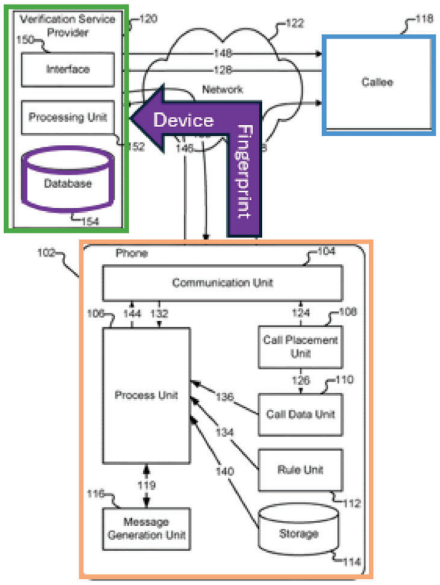 FIG. 1	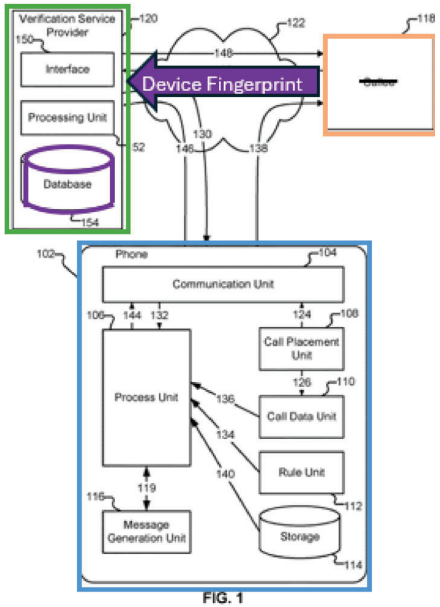 FIG. 1

EX-1025
AT&T SERVICES INC., CELLCO PARTNERSHIP D/B/A VERIZON WIRELESS, AND NOKIA OF AMERICA CORPORATION v. RIGHTQUESTION, LLC
000024