UNITED STATES INTERNATIONAL TRADE COMMISSION
WASHINGTON, DC

Before the Honorable MaryJoan McNamara
Administrative Law Judge

In the Matter of CERTAIN WIRELESS FRONT-END MODULES AND DEVICES CONTAINING THE SAME	Investigation No. 337-TA-1413

REBUTTAL EXPERT REPORT OF DAVID WENTZLOFF, PH.D. REGARDING VALIDITY OF U.S. PATENT 8,717,101 AND U.S. PATENT 9,917,563

Skyworks Ex 2006
Kangxi v. Skyworks
IPR2025-00372

Table of Contents

I. INTRODUCTION 5
II. SUMMARY OF REPORT 7
III. BACKGROUND AND QUALIFICATIONS 10
IV. PRIOR TESTIMONY AND COMPENSATION 10
V. INFORMATION AND MATERIALS CONSIDERED 11
VI. LEVEL OF ORDINARY SKILL IN THE ART 11
VII. LEGAL STANDARDS 11
A. Claim Construction 11
B. Validity 12
C. Prior Art 12
D. Anticipation 13
E. Obviousness 14
F. Objective Indicia of Non-Obviousness 16
G. Enablement 17
H. Written Description 18
VIII. Claim Construction 18
IX. OVERVIEW OF RELEVANT TECHNOLOGY 18
X. OVERVIEW OF ’101 AND ’563 PATENTS 19
XI. STATE OF THE ART 19
XII. VALIDITY OF THE ’563 PATENT OVER THE PRIOR ART 20
A. Claims 14, 15, 17, and 20 Are Not Obvious over Ishimaru 20
1. Ishimaru does not teach or suggest “*[a] packaged module comprising: a package substrate; and; an integrated circuit attached to the package substrate*” 20
2. Ishimaru does not teach or suggest “*a bias circuit configured to receive a power amplifier enable signal and to generate a bias signal that biases the power amplifier*” 27
3. Ishimaru does not teach or suggest “*a gain correction circuit configured to generate a control current in response to activation of the power amplifier enable signal and to mirror the control current to generate a correction current*.” 37
4. Ishimaru does not render obvious claims 15 and 20 56
5. Ishimaru does not render obvious claim 17 56
B. Claims 14, 15, 17, and 20 Are Not Obvious over Ishimaru in View of Ichitsubo 62
1. Ichitsubo does not disclose the limitations of claims 14, 15, 17, and 20 62
2. A POSITA would not have been motivated to combine Ishimaru and Ichitsubo 63
C. Claims 14, 15, 17, and 20 Are Not Obvious over Ishimaru in View of Johnson 67

1. Johnson does not disclose the limitations of claims 14, 15, 17, and 20 67
2. A POSITA would not have been motivated to combine Ishimaru and Johnson.....68
D. Claims 14, 15, 17, and 20 Are Not Obvious over Ishimaru in View of Harrison 70
1. Harrison does not disclose the limitations of claims 14, 15, 17, and 20 71
2. A POSITA would not have been motivated to combine Ishimaru and Harrison.....72
E. Claims 14, 15, 17, and 20 Are Not Obvious over Ishimaru in View of Ichitsubo and Harrison 81
1. Ichitsubo does not disclose the limitations of claims 14, 15, 17, and 20.....81
2. Harrison does not disclose the limitations of claims 14, 15, 17, and 20 82
3. A POSITA would not have been motivated to combine Ishimaru, Ichitsubo, and Harrison 82
F. Claims 14, 15, 17, and 20 Are Not Obvious over Ishimaru in View of Johnson and Harrison 82
1. Johnson does not disclose the limitations of claims 14, 15, 17, and 20 82
2. Harrison does not disclose the limitations of claims 14, 15, 17, and 20 82
3. A POSITA would not have been motivated to combine Ishimaru, Johnson, and Harrison 83
XIII. Validity of the ’101 Patent over the Prior Art 83
A. Claims 1-2, 10-11, 17-18, and 21-22 Are Not Anticipated by Ishimaru.....83
1. Ishimaru does not disclose *“a time-dependent signal generator configured to shape an enable signal of the power amplifier to generate a control current”* (independent claims 1 and 21) and *“shaping an enable signal using a time-dependent signal generator to generate a control current”* (independent claim 17) 83
2. Ishimaru does not disclose “*a current amplifier configured to amplify the control current to generate a correction current*” (independent claims 1 and 21) and *“amplifying the control current using a current mirror of a current amplifier to generate a correction current”* (independent claim 17).....84
3. Ishimaru does not disclose “*a primary biasing circuit [block] configured to generate a bias current for the power amplifier based at least partly on the correction current, the bias current configured to correct for a variation in gain of the power amplifier when the power amplifier is enabled”* (independent claims 1 and 21 (word in brackets is in claim 21)) and *“generating a bias current for a power amplifier using a primary biasing circuit, the primary biasing circuit configured to use the correction current to correct for a variation in gain of the power amplifier when the power amplifier is enabled”* (independent claim 17) 85
4. Ishimaru does not disclose “*the current amplifier including a current mirror*” (independent claims 1 and 21) and “using a current mirror of a current amplifier” (independent claim 17) 86
5. Ishimaru does not disclose claims 2, 10-11, 17-18, and 21-22. 87

B. Claims 1-2, 10-11, 17-18 and 20-22 Are Not Obvious over Ishimaru in View of Harrison 88

1. Harrison does not disclose the limitations of claims 1-2, 10-11, 17-18 and 20-22 89

2. A POSITA would not have been motivated to combine Ishimaru and Harrison.....91

C. Claim 20 Is Not Obvious over Ishimaru in View of the General Knowledge in the Art...92

1. A POSITA would not have been motivated to combine Ishimaru and the knowledge in the art 92

D. Claim 20 Is Not Obvious over Ishimaru in View of Johnson 94

1. Johnson does not disclose the limitations of claim 20.....94

2. A POSITA would not have been motivated to combine Ishimaru and Johnson.....94

E. Claim 20 Is Not Obvious over Ishimaru in View of Harrison and Johnson 95

1. Harrison does not disclose the limitations of claim 20.....95

2. Johnson does not disclose the limitations of claim 20.....95

3. A POSITA would not have been motivated to combine Ishimaru, Harrison and Johnson 96

XIV. OBJECTIVE INDICIA of Non-Obviousness 96

A. Overview of Objective Indicia 96

B. Long-Felt but Unresolved Need.....96

C. Failure of Others.....103

D. Unexpected Results and Teaching Away 104

E. Praise by Others.....109

F. Commercial Success.....111

G. Copying.....113

XV. The ’101 and ’563 Patents satisfy the enablement and written description requirements 119

A. The Specification of the ’101 and ’563 Patents Satisfies the Enablement Requirement 119

B. The Specification of the ’101 and ’563 Patents Satisfies the Written Description Requirement.....124

XVI. SUPPLEMENTATION 129

I. INTRODUCTION

1. I have been retained by Skyworks Solutions, Inc., Skyworks Solutions Canada, Inc., and Skyworks Global Pte. Ltd. (collectively, "Complainants" or "Skyworks") to serve as an independent expert in this Investigation.

2. I have been retained by Skyworks Solutions, Inc., Skyworks Solutions Canada, Inc., and Skyworks Global Pte. Ltd. (collectively, "Complainants" or "Skyworks") to serve as an independent expert in this Investigation.

3. I understand that Skyworks has asserted that Respondents Kangxi Communication Technologies (Shanghai) Co., Ltd. ("Kangxi") and Grand Chip Labs, Inc. ("GCL") (collectively, "KCT" or the "KCT Respondents"), D-Link Corporation and D-Link Systems, Inc. (collectively, "D-Link" or the "D-Link Respondents"), and Ruijie Networks Co., Ltd. ("Ruijie") (collectively, "Respondents") unlawfully import into the United States, sell for importation into the United States, and/or sell within the United States after importation certain wireless Front-End Modules ("FEMs"), devices containing the same, and components thereof that directly and/or indirectly infringe U.S. Patent Nos. 8,717,101 (the "'101 patent") and 9,917,563 (the "'563 patent"), (collectively, the "Asserted Patents"), either literally or under the doctrine of equivalents.

4. I understand that Respondents have asserted that the '101 and '563 patents are invalid as anticipated by certain prior references, obviousness over the combination of certain prior art references, and fail to satisfy the written description and enablement requirements. In particular, I understand that Respondents have asserted that:

- Claims 14, 15, 17 and 20 of the '563 patent are obvious over U.S. Patent Application Publication No. 2009/0212863 to Ishimaru ("Ishimaru").
- Claims 14, 15, 27, and 20 of the '563 patent are obvious over Ishimaru in view of U.S. Patent Application Publication No. 2004/0232982 to Ichitsubo ("Ichitsubo").

- Claims 14, 15, 17, and 20 of the ’563 patent are obvious over Ishimaru in view of *Silicon-Germanium BiCMOS HBT Technology for Wireless Power Amplifier Applications* (“Johnson”).

- Claims 14, 15, 17, and 20 of the ’563 patent are obvious over Ishimaru in view of *Current Sources and Voltage References, A Design Reference for Electronics Engineers* (“Harrison”).

- Claims 14, 15, 17, and 20 of the ’563 patent are obvious over Ishimaru in view of Ichitsubo and Harrison.

- Claims 14, 15, 17, and 20 of the ’563 patent are obvious over Ishimaru in view of Johnson and Harrison.

- Claims 1, 2, 10, 11, 17, 18, 21, and 22 of the ’101 patent are anticipated by Ishimaru.

- Claims 1, 2, 10, 11, 17, 18, 20, 21, and 22 of the ’101 patent are obvious over Ishimaru in view of Harrison.

- Claim 20 of the ’101 patent is obvious over Ishimaru in view of the “general knowledge in the art.”

- Claim 20 of the ’101 patent is obvious over Ishimaru in view of Johnson.

- Claim 20 of the ’101 patent is obvious over Ishimaru in view of Harrison and Johnson.

- Objective indicia of non-obviousness do not demonstrate that the claims of the ’101 and ’563 patents are not obvious.

- The ’101 and ’563 patents do not satisfy the enablement requirement

- The ’101 and ’563 patents do not satisfy the written description requirement.

5. I have been asked to perform analyses and provide expert testimony relating to Respondents’ allegations of invalidity of the ’101 patent and ’563 patent.

6. It is my conclusion that the claims of the ’101 and ’563 are valid. I expect to testify concerning these conclusions, the bases for them, and subjects outlined in this report.

II. SUMMARY OF REPORT

7. I have analyzed in detail the Expert Report of David Ricketts Regarding the Invalidity of U.S. Patent Nos. 8,717,101 and 9,917,563 ("Ricketts Opening Report."). I have also analyzed in detail the prior art references upon which Dr. Ricketts relies: Ishimaru, Ichitsubo, Harrison and Johnson. For example, I have analyzed whether any of these prior art references, alone or in combination, invalidate any of the Asserted Claims of the '101 and '563 patents.

8. I conclude that, for the reasons explained below, claims 14, 15, 17 and 20 of the '563 patent are not obvious over Ishimaru at least because Ishimaru does not teach or suggest (1) "[a] packaged module comprising: a package substrate;" (2) "an integrated circuit attached to the package substrate;" (3) "a bias circuit configured to receive a power amplifier enable signal and to generate a bias signal that biases the power amplifier;" or (4) "a gain correction circuit configured to generate a control current in response to activation of the power amplifier enable signal and to mirror the control current to generate a correction current," as required by claim 14.

9. I conclude that, for the reasons explained below, claims 14, 15, 17, and 20 of the '563 patent are not obvious over Ishimaru in view of Ichitsubo at least because Ishimaru does not teach or suggest the elements recited in claim 14 that I identified above, and Ichitsubo does not cure Ishimaru's deficiencies. Further, a POSITA would not have been motivated to combine Ishimaru and Ichitsubo.

10. I conclude that, for the reasons explained below, claims 14, 15, 17, and 20 of the '563 patent are not obvious over Ishimaru in view of Johnson at least because Ishimaru does not teach or suggest the elements recited in claim 14 that I identified above, and Johnson does not cure Ishimaru's deficiencies. Further, a POSITA would not have been motivated to combine Ishimaru and Johnson.

[redacted]

11. I conclude that, for the reasons explained below, claims 14, 15, 17, and 20 of the ’563 patent are not obvious over Ishimaru in view of Harrison at least because Ishimaru does not teach or suggest the elements recited in claim 14 that I identified above, and Harrison does not cure Ishimaru’s deficiencies. Further, a POSITA would not have been motivated to combine Ishimaru and Harrison.

12. I conclude that, for the reasons explained below, claims 14, 15, 17, and 20 of the ’563 patent are not obvious over Ishimaru in view of Ichitsubo and Harrison at least because Ishimaru does not teach or suggest the elements recited in claim 14 that I identified above, neither Ichitsubo nor Harrison cure Ishimaru’s deficiencies. Further, a POSITA would not have been motivated to combine Ishimaru, Ichitsubo, and Harrison.

13. I conclude that, for the reasons explained below, claims 14, 15, 17, and 20 of the ’563 patent are not obvious over Ishimaru in view of Johnson and Harrison at least because Ishimaru does not teach or suggest the elements recited in claim 14 that I identified above, and neither Johnson nor Harrison cure Ishimaru’s deficiencies. Further, a POSITA would not have been motivated to combine Ishimaru, Johnson, and Harrison.

14. I conclude that, for the reasons explained below, claims 1, 2, 10, 11, 17, 18, 21, and 22 of the ’101 patent are not anticipated by Ishimaru at least because Ishimaru does not teach or suggest (1) “a time-dependent signal generator configured to shape an enable signal of the power amplifier to generate a control current;” (2) “a current amplifier configured to amplify the control current to generate a correction current;” (3) “a primary biasing circuit configured to generate a bias current for the power amplifier based at least partly on the correction current, the bias current configured to correct for a variation in gain of the power amplifier when the power

amplifier is enabled;" or (4) "the current amplifier including a current mirror" as required by claims 1, 17, and 21.

15. I conclude that, for the reasons explained below claims 1, 2, 10, 11, 17, 18, 20, 21, and 22 of the '101 patent are not obvious over Ishimaru in view of Harrison at least because Ishimaru does not teach or suggest the elements recited in claims 12, 17, and 21 that I identified above, and Harrison does not cure Ishimaru's deficiencies. Further, a POSITA would not have been motivated to combine Ishimaru and Harrison.

16. I conclude that, for the reasons explained below, claim 20 of the '101 patent is not obvious over Ishimaru in view of "the general knowledge in the art" at least because Ishimaru does not teach or suggest the elements recited in claim 17 that I identified above, and "the general knowledge in the art" does not cure Ishimaru's deficiencies. Further, a POSITA would not have been motivated to combine Ishimaru and "the general knowledge in the art."

17. I conclude that, for the reasons explained below, claim 20 of the '101 patent is not obvious over Ishimaru in view of Johnson at least because Ishimaru does not teach or suggest the elements recited in claim 17 that I identified above, and Johnson does not cure Ishimaru's deficiencies. Johnson also does not disclose "generating the bias current includes shaping the bias current so as to compensate for a gain variation of a heterojunction bipolar transistor (HBT)" as recited in claim 17. Further, a POSITA would not have been motivated to combine Ishimaru and Johnson.

18. I conclude that, for the reasons explained below, claim 20 of the '101 patent is not obvious over Ishimaru in view of Harrison and Johnson at least because Ishimaru does not teach or suggest the elements recited in claim 17 that I identified above, and neither Harrison nor Johnson cure Ishimaru's deficiencies. Both Harrison and Johnson also fail to disclose

[redacted]

"generating the bias current includes shaping the bias current so as to compensate for a gain variation of a heterojunction bipolar transistor (HBT)" as recited in claim 17. Further, a POSITA would not have been motivated to combine Ishimaru, Harrison, and Johnson.

19. I conclude that, for the reasons explained below, the objective indicia of nonobviousness, including: (1) long-felt but unresolved need; (2) failure of others; (3) unexpected results; (4) teaching away; (5) praise by others; (6) commercial success; and (7) copying further demonstrate that the claims of the '101 and '563 patents are not obvious.

20. I conclude that, for the reasons explained below, the specification of the '101 and '563 patents satisfies the enablement requirement because the specification describes the claimed inventions so as to enable a POSITA to make and use the claimed invention without undue experimentation.

21. I conclude that, for the reasons explained below, the specification of the '101 and '563 patents satisfies the written description requirement because the specification conveys with reasonable clarity to a POSITA that, as of the filing dates of the '101 and '563 patents, the inventors possessed the claimed invention.

III. BACKGROUND AND QUALIFICATIONS

22. My background and qualifications are set forth in my report entitled "First Supplemental Opening Expert Report of David Wentzloff, Ph.D. Regarding U.S. Patent 8,717,101 and U.S. Patent 9,917,563" ("Wentzloff Supplemental Opening Report"), as well as my curriculum vitae, which was attached as Exhibit A to my previous report.

IV. PRIOR TESTIMONY AND COMPENSATION

23. My compensation and testimony history is set forth in the Wentzloff Supplemental Opening Report.

V. INFORMATION AND MATERIALS CONSIDERED

24. In addition to any materials cited in this report, I have reviewed and considered the materials listed in Exhibit B.

VI. LEVEL OF ORDINARY SKILL IN THE ART

25. For the reasons explained in the Wentzloff Supplemental Opening Report, a person of ordinary skill in the art ("POSITA" or "skilled artisan") at the time of the invention of the '101 and '563 patents would have had at least a Bachelor's Degree in Electrical Engineering or a related field and at least two years of training or additional work experience in the area of RF electronics or a related field.

26. At the time of the invention of the '101 and '563 patents, I would have qualified as a POSITA. In forming my opinions set forth in this report, I have analyzed the '101 and '563 patents from the perspective of a POSITA at the time of the invention (May 13, 2011).

VII. LEGAL STANDARDS

27. I am not an attorney. For the purposes of this report, I have been informed about certain aspects of the law that may be relevant to my opinions concerning the validity of the '101 and '563 patents. My understanding of the law is set forth below.

A. Claim Construction

28. I have been informed and understand that a patent may include independent and dependent claims. An independent claim is a standalone claim that includes only the limitations it recites. A dependent claim includes all the limitations that it recites plus all the limitations recited in the claim(s) from which it depends.

29. Further details regarding my understanding of the scope of the Asserted Claims and the constructions I have applied in this report are set forth in Section VIII of this report, titled "Claim Construction."

B. Validity

30. I have been informed and understand that the claims of a patent are presumed to be valid. I understand that in order to overcome the presumption of validity, Respondents must demonstrate invalidity of a claimed invention by clear and convincing evidence. I understand that this is a heightened standard of proof as compared to the preponderance of the evidence standard used for infringement and that, in challenging the validity of the patents, Respondents bear the heavy burden of overcoming the deference that is due to a qualified government agency (the Patent Office) that is presumed to have done its job. I have been informed that "clear and convincing" evidence means evidence that makes a fact highly probable.

31. I have reviewed the applications that led to the '101 and '563 patents. Each of those applications claims priority to an application filed before March 16, 2013.[1] I understand that because these applications claim priority to an application filed before March 16, 2013, the changes to the Patent Act through the America Invents Act ("AIA") do not apply to the '101 and '563 patents. I further understand that the validity of these patents is to be evaluated using the standards set out in the pre-AIA version of the Patent Act.

C. Prior Art

32. I have been informed and understand that a claimed invention is not patentable if the claimed invention was disclosed in "prior art." I have been informed and understand that there are different ways in which a publication, product, or method may qualify as prior art to a patent.

---

[1] In particular, the '101 patent issued from non-provisional U.S. Patent Application No. 13/468,749 (the "'749 application") which was filed on May 10, 2012. The '563 patent issued from non-provisional U.S. Patent Application No. 15/377,842, which claims priority to the '749 application as a continuation. Notably, both patents also claim priority to U.S. Provisional Application No. 61/486,186 filed on May 13, 2011.

33. I have been informed and understand that under Section 102(a) of the pre-AIA version of the Patent Act, a patent claim is invalid only if Respondents prove by clear and convincing evidence that "the invention was known or used by others in this country, or patented or described in a printed publication in this or a foreign country, before the invention thereof by the applicant for patent." I also understand that a patentee may rely on an earlier invention date to overcome prior art under Section 102(a) if the patent shows either (a) conception and reduction to practice before the date of the prior art or (b) conception before the date of the prior art along with diligence until the invention is reduced to practice.

34. I have also been informed and understand that under Section 102(b) of the pre-AIA version of the Patent Act, a patent claim is invalid only if Respondents prove by clear and convincing evidence that "the invention was patent or described in a printed publication in this or a foreign country or in public use or on sale in this country, more than one year prior to the date of the application for patent in the United States." I further understand that under this section, an invention is considered to have been "on sale" only if a product that was sold or offered for sale possessed each element of the claimed invention.

D. Anticipation

35. I have been informed and understand that, in order to prove that a patent claim is invalid for anticipation, Respondents must prove by clear and convincing evidence that each and every element in the claim is disclosed, either expressly or inherently, in a single prior-art reference. I also understand that in order for a disclosure to be inherent, Respondents must prove by clear and convincing evidence that the limitation must necessarily be contained in the alleged prior art reference. If a system or method described in a prior art reference might possibly contain a claimed limitation, that is insufficient to demonstrate that the prior art reference inherently teaches that limitation. Inherency may not be established by mere probabilities or

possibilities. I understand that it is Respondents' burden to prove by clear and convincing evidence that every element in a claim invention was found in the prior art, either expressly or inherently.

36. I have been informed and understand that in order to prove anticipation of a claim, an alleged prior art reference must not only disclose all elements of the claim within the four corners of the reference, but Respondents must also prove by clear and convincing evidence that the reference discloses those elements arranged as in the claim to anticipate. I understand that, where an asserted prior art reference discloses elements in different locations in the reference, Respondents must prove by clear and convincing evidence that the reference is sufficiently clear in disclosing that those elements could be combined such that a POSITA would at once envisage the claimed combination.

37. I have been informed and understand that an anticipating reference must be enabling. I further understand that the disclosure in the assertedly anticipating reference must be adequate such that a POSITA can practice the subject matter based on the reference without undue experimentation.

E. Obviousness

38. I have been informed and understand that a patent claim is invalid as obvious only if, at the time of the invention, the subject matter as a whole would have been obvious to a POSITA before the effective filing date of the claim invention. I have been informed that obviousness is based on a factual inquiry, and includes analyzing (i) the scope and content of the prior art, (ii) the differences between the prior art and the claim, (iii) the level of ordinary skill in the art at the effective filing date of the claimed invention, and (iv) the existence of objective indicia of non-obviousness.

39. I have been informed and understand that a claimed invention can be found to be obvious over a single prior art reference or multiple prior art references. I understand that references qualify as prior art for an obviousness determination only when they are analogous to the claimed invention. Two separate tests define the scope of analogous prior art: (1) whether the art is from the same field of endeavor, regardless of the problem addressed; and (2) if the reference is not within the field of the inventor's endeavor, whether the reference still is reasonably pertinent to the particular problem with which the inventor is involved.

40. I have been informed and understand that Respondents cannot prove that a claim comprising multiple elements is obvious simply by showing that each element, independently, was known in the prior art. I also understand that Respondents must prove by clear and convincing evidence some reason or motivation that would have led a POSITA to combine or modify the relevant teachings in the prior art to obtain the claimed invention. I understand that the motivation to combine prior art references can come from the knowledge of those skilled in the art, from the prior art reference itself, or from the nature of the problem to be solved. I further understand that the mere fact that a POSITA could combine the references is not sufficient. Respondents must show by clear and convincing evidence that some reason or motivation existed that would have led a POSITA to combine or modify the relevant teachings in the prior art to obtain the claimed invention. In addition, I understand that Respondents must prove by clear and convincing evidence that a POSITA would have had a reasonable expectation of success in achieving the claimed combination based on the teachings of the prior art. I have been informed and understand that a reasonable expectation of success includes that a POSITA would have expected the claimed combination to have its desired properties.

41. I have been informed and understand that a claimed invention is not obvious if the prior art teaches away from the claimed invention. I further understand that a reference teaches away from the claimed invention when a POSITA, upon reading the reference, would be discouraged from arriving at the claimed invention or would be led in a direction that diverges from the claimed invention. Finally, I understand that even if a reference does not teach away from the claimed invention, its statements regarding preferences are relevant to whether a POSITA would be motivated to combine that reference with another reference and/or would have had a reasonable expectation of success in doing so.

42. I have been informed and understand that it is incorrect to evaluate obviousness from a hindsight perspective. Consistent with the prohibition against using hindsight bias, I understand that the teachings of the patents at issue, which would not have been available to a POSITA before the patented invention, should not be used as a roadmap or guide to how elements of prior art references could be combined so as to achieve the claimed invention. I have been informed and understand that the requirements for clear and convincing evidence demonstrating both a motivation to combine prior art references and a reasonable expectation of success in doing so are intended to prohibit reliance on hindsight and *ex post* reasoning when evaluating obviousness.

F. Objective Indicia of Non-Obviousness

43. I have been informed and understand that evaluating whether a patent claim would have been obvious to a POSITA at the time of the claimed invention also involves analysis of certain "objective indicia of non-obviousness." I understand that objective indicia of non-obviousness, if present, must always be considered before reaching a determination on the issue of obviousness. I have been informed and understand that these objective indicia of non-obviousness include: (a) whether there was a long-felt but unresolved need in the art that was

satisfied by the claimed invention; (b) whether others had tried but failed to make the claimed invention; (c) whether the claimed invention achieved unexpected results; (d) whether the claimed invention was praised by others; (e) whether products incorporating the claimed invention have achieved commercial success; and (f) whether others have copied the claimed invention.

44. I also understand that when analyzing objective indicia of non-obviousness, it is important to consider whether there is a nexus between the indicia and the claimed invention. I have been informed and understand that if the relevant objective indicia of non-obviousness are tied to a specific product and that product embodies the claimed invention, and is coextensive with the claimed invention, then a nexus is presumed. I also understand that a nexus can also be shown if the objective indicia of non-obviousness are commensurate in scope with the claims or if the objective indicia are a direct result of the characteristics of the claimed invention. Finally, I understand that the objective indicia of non-obviousness must be tied to the claimed invention beyond what was known in the prior art. In other words, there must be a connection between the evidence of objective indicia of non-obviousness and the claimed invention sufficient to show that the objective indicia of non-obviousness is tied to the merits of the claimed invention beyond what was known in the prior art.

G. Enablement

45. I have been informed and understand that with respect to Section 112 of the pre-AIA version of the Patent Act, a patent specification needs to describe the claimed invention so as to enable a POSITA to make and use the claimed invention without undue experimentation. Under this "enablement" requirement, there must be sufficient disclosure, either through illustrative examples or terminology, to teach a POSITA how to make and how to use the invention as it is claimed. In determining whether experimentation is undue, the following

factors may be considered: (a) the amount of direction or guidance presented in the specification; (b) the presence or absence of working examples; (c) the nature of the invention; (d) the state of the prior art; (e) the relative skill of those in the art; (f) the predictability or unpredictability of the art; and (g) the breadth of the claims. I have been informed and understand that enablement is determined as of the effective filing date of the patent's application.

H. Written Description

46. I have been informed and understand that with respect to Section 112 of the pre-AIA version of the Patent Act, a patent claim must be adequately supported by the specification. To satisfy this written description requirement, the specification must convey with reasonable clarity to a POSITA that, as of the patent's filing date, the inventors possessed the claimed invention. The written description of the patent provides an adequate description if it describes the full scope of what is claimed and conveys to a POSITA that the inventors actually invented what they have claimed.

VIII. CLAIM CONSTRUCTION

47. My understanding of claim construction, including the constructions I have applied in arriving at the conclusions described below, is set forth in the Wentzloff Supplemental Opening Report. When the ALJ issues a decision regarding claim construction, I reserve the right to update my report accordingly.

IX. OVERVIEW OF RELEVANT TECHNOLOGY

48. I respond below to certain statements in the Ricketts Opening Report in the section entitled Overview of Relevant Technology.

49. Dr. Ricketts opines that "[t]he primary – in many cases, only – component in the PA is a core transistor, commonly a bipolar junction transistor ("BJT")." Ricketts Opening Report at ¶ 27. I do not agree that a power amplifier's primary or only component is a transistor.

Although a power amplifier often includes a transistor, power amplifiers may take many forms such as by having multiple stages. *See*, *e.g.*, '563 patent at 8:48-52 ("[S]killed artisans will appreciate that the teachings described herein can be applied to a variety of power amplifier structures, including, for example, multi-stage power amplifier structures and/or power amplifiers employing other transistor structures.").

X. OVERVIEW OF '101 AND '563 PATENTS

50. I respond below to certain statements in Dr. Ricketts' opening report in his section entitled Overview of Asserted Patents.

51. Dr. Ricketts opines that "[a]lthough Ishimaru was disclosed during prosecution of the '563 Patent, the Examiner did not discuss, apply, or otherwise meaningfully address its disclosure. Thus, neither the same or similar combinations of prior art, nor the arguments set forth below, were before the examiner during prosecution." Ricketts Opening Report at 51. I disagree that the Examiner did not meaningfully address the disclosure of Ishimaru, and I also disagree with the statement that neither the same or similar combinations of prior art, nor the arguments set forth below, were before the examiner during prosecution, as I explain below in Section XII.A.3.

XI. STATE OF THE ART

52. I do not agree with certain statements in Dr. Ricketts' opening report in his section entitled State of the Art at the Time of the Alleged Invention, specifically those that are in contradiction with my opinions as set forth in Section XII below titled "Validity of the 563 Patent over the Prior Art."

XII. VALIDITY OF THE ’563 PATENT OVER THE PRIOR ART

A. Claims 14, 15, 17, and 20 Are Not Obvious over Ishimaru

53. Dr. Ricketts opines that Ishimaru alone renders obvious claims 14, 15, 17, and 20 of the ’563 patent. Ricketts Opening Report at ¶¶ 153-158, 173-204. I disagree. For the reasons set forth below, Ishimaru does not teach or suggest the following elements.

1. Ishimaru does not teach or suggest “*[a] packaged module comprising: a package substrate; and; an integrated circuit attached to the package substrate*”

54. Ishimaru does not disclose “*[a] packaged module comprising: a package substrate; and; an integrated circuit attached to the package substrate*” as required by claims 14, 15, 17, and 20. Dr. Ricketts apparently agrees, conceding that Ishimaru does not “expressly describe” this requirement of the claims (elements [14.0], [14.1], [14.2] according to Ricketts Opening Report). Ricketts Opening Report at ¶ 155. However, Dr. Ricketts opines that these packaging limitations would be “disclosed to a POSITA in view of the reasonable inferences that a skilled artisan would draw when reading” Ishimaru (referring to [14.0], [14.1], [14.2]). *Id.* at ¶158. I disagree. Ishimaru neither discloses this claim requirement explicitly nor inherently.

55. As an initial matter, Ishimaru does not mention a “package,” “packaged module,” “package substrate,” “integrated circuit,” or “integrated circuit attached to the package substrate” at all. Ishimaru discloses certain circuits, but is completely silent regarding how those circuits are to be physically implemented or whether they are packaged. One or more of Ishimaru’s circuits (e.g., input matching circuit 102, output matching circuit 104, bias circuit 111, speedup circuit 122) could be separately packaged, or not packaged at all, and the circuitry disclosed in Ishimaru’s Figure 1 would still work as disclosed. Ishimaru does not provide any suggestion or motivation that all the circuits of Figure 1 are combined into a single packaged module with a package substrate.

[redacted]

56. Dr. Ricketts cites one passage from Ishimaru's paragraph 1—"a high frequency amplifier to be used in radio communication devices or the like" (Ishimaru at ¶ 1)—but this disclosure does not teach or suggest anything either expressly or inherently about a "packaged module," "package substrate," or "an integrated circuit attached to the package substrate." It does not, for example, provide any insight into whether all, some, or none of Ishimaru's circuits have to be in a packaged module as claimed, or whether they have to be in the same packaged module. Ricketts Opening Report at ¶ 155. A "radio communication device" is a general term that encompasses multiple components that can be instantiated separately in separate integrated circuits and does not disclose or suggest to a POSITA to put any two components or circuits into one packaged module.

57. Dr. Ricketts contends that because "Ishimaru is directed to an incremental improvement … directed at the margin of high performing devices" and such improvement "requires additional circuitry [that] would be routine and expected to be integrated into an IC [(integrated circuit)] and packaged," Ishimaru's "PA (green) and bias circuits (blue) would be implemented" in the same integrated circuit as claimed. Ricketts Opening Report at ¶¶ 156-157.

[redacted]

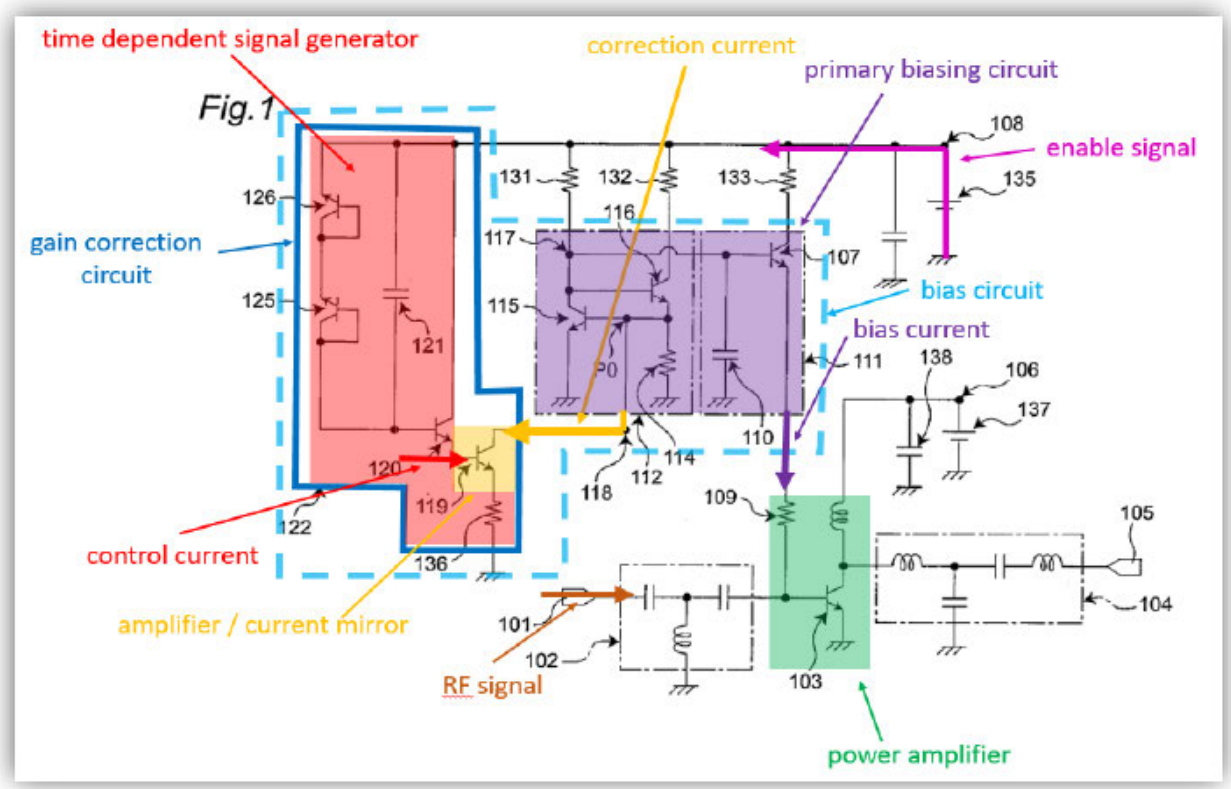

Ricketts' Report at ¶ 154. I disagree. Whether Ishimaru is directed to an "incremental improvement" or requires "additional circuitry" as Dr. Ricketts argues, it does not teach or suggest to include any such "additional circuitry" into the same integrated circuit and packaged module or package substrate. The Ricketts Opening Report is, at best, conclusory on this point and does not provide evidence or details showing why the components in Ishimaru would necessarily be packaged, let alone packaged together. Ricketts Opening Report at ¶¶ 154-158.

58. Contrary to Dr. Ricketts contention, it would have been natural for a skilled artisan to implement Ishimaru's various circuits in separate packaged modules and on separate packaged substrates, instead of in a single packaged module using a single package substrate as claimed in claim 14 of the '563 patent. The power amplifier (green) and bias circuits (light dashed blue) that Dr. Ricketts highlights could be two separately packaged components. Nothing

[redacted]

in Ishimaru would have taught or suggested to a POSITA that these circuits cannot be implemented as **package 1** and **package 2**, as shown below.

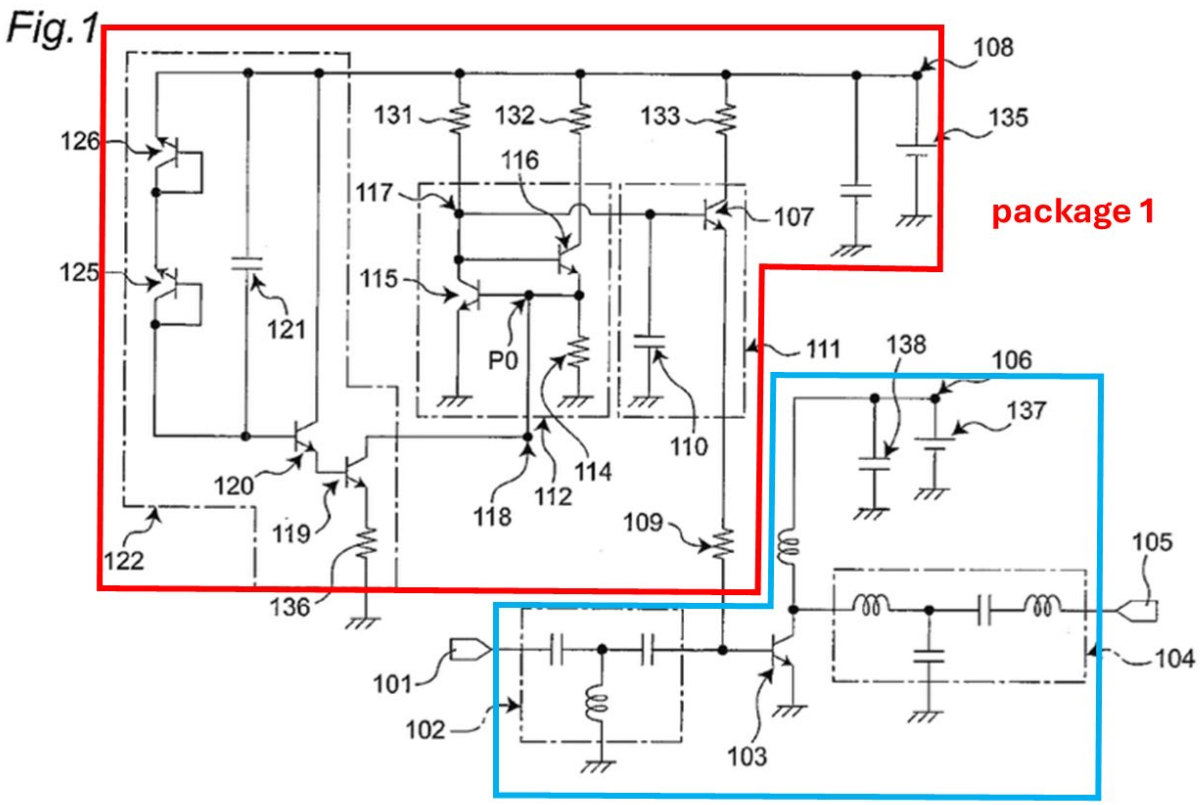

Ishimaru at Fig. 1 (annotated). This would result in at least two packages. For example, as shown below, an external bias controller (separately packaged from a power amplifier) like Infineon's BCR400W existed before the '563 patent, to which a POSITA could have easily implemented Ishimaru's "incremental improvement."

[redacted]

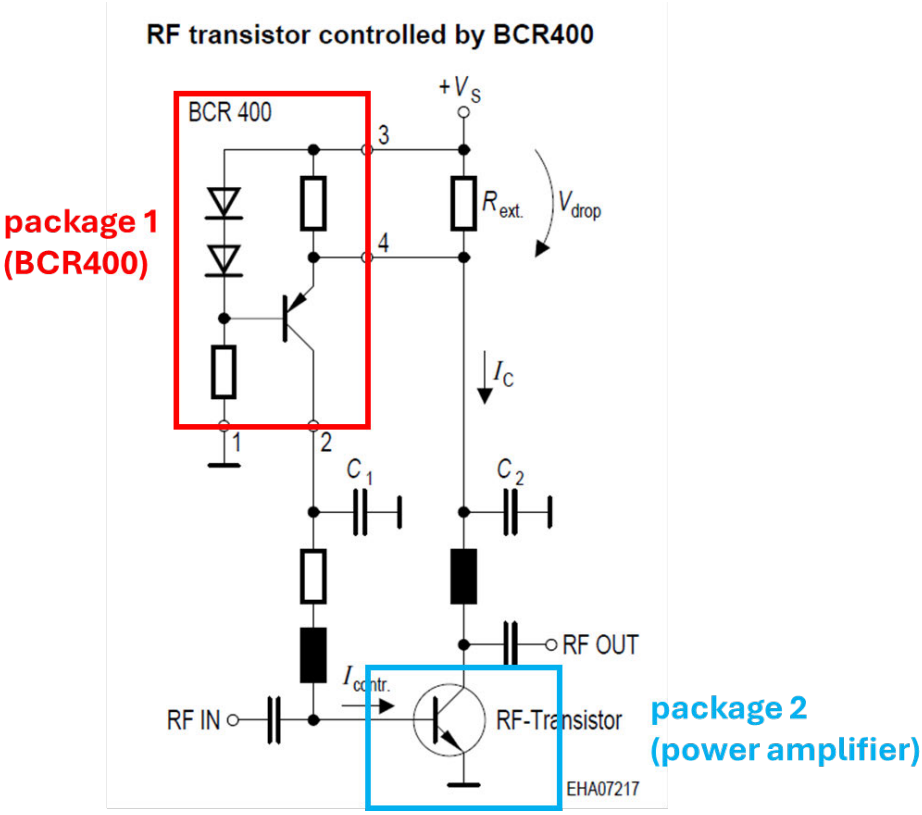

BCR400W Datasheet at 6 (annotated). Because bias controllers (BCR400) and power amplifier (RF Transistor) already existed before the '563 patent, a POSITA would prefer to improve each component individually rather than combine them, for optimization of each component, to reduce manufacturing costs, and to broaden their applicability across various uses.

59. Also, a POSITA could have easily built Ishimaru's speedup circuit 122 (which Dr. Ricketts calls "an incremental improvement") in a separate package (**package 1**) or without a package, and connected it with the rest of Ishimaru's circuit (**package 2**), as shown below.

[redacted]

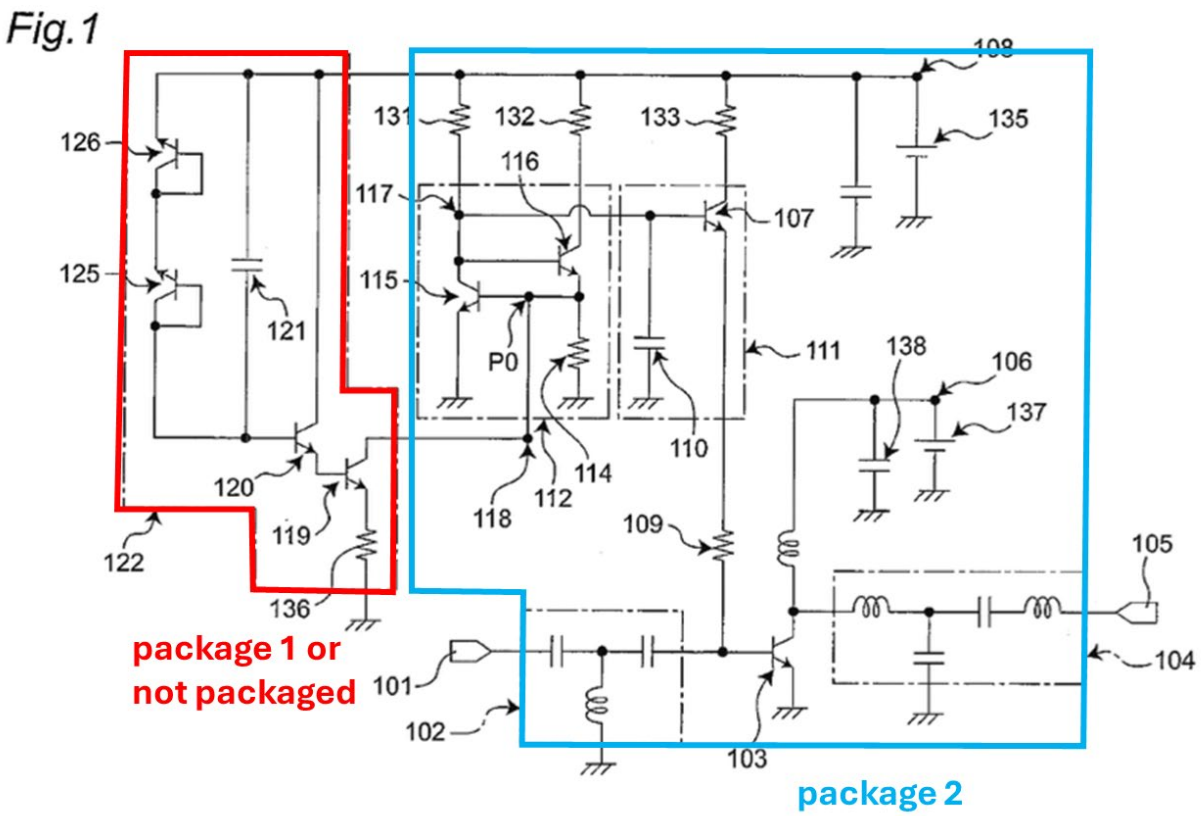

Ishimaru at Fig. 1 (annotated). As shown, adding what Dr. Ricketts calls Ishimaru's "incremental improvement" with a separate package or without a package externally would be more straightforward as it would not require redesigning the rest of the circuit (if they were in one package). This would result in at least two packages, different from the first example above. It also would have been possible for one or more of the highlighted subcircuits below to be implemented in different packages or attached to different substrates even if they were packaged together. Ishimaru is simply silent on these issues.

[redacted]

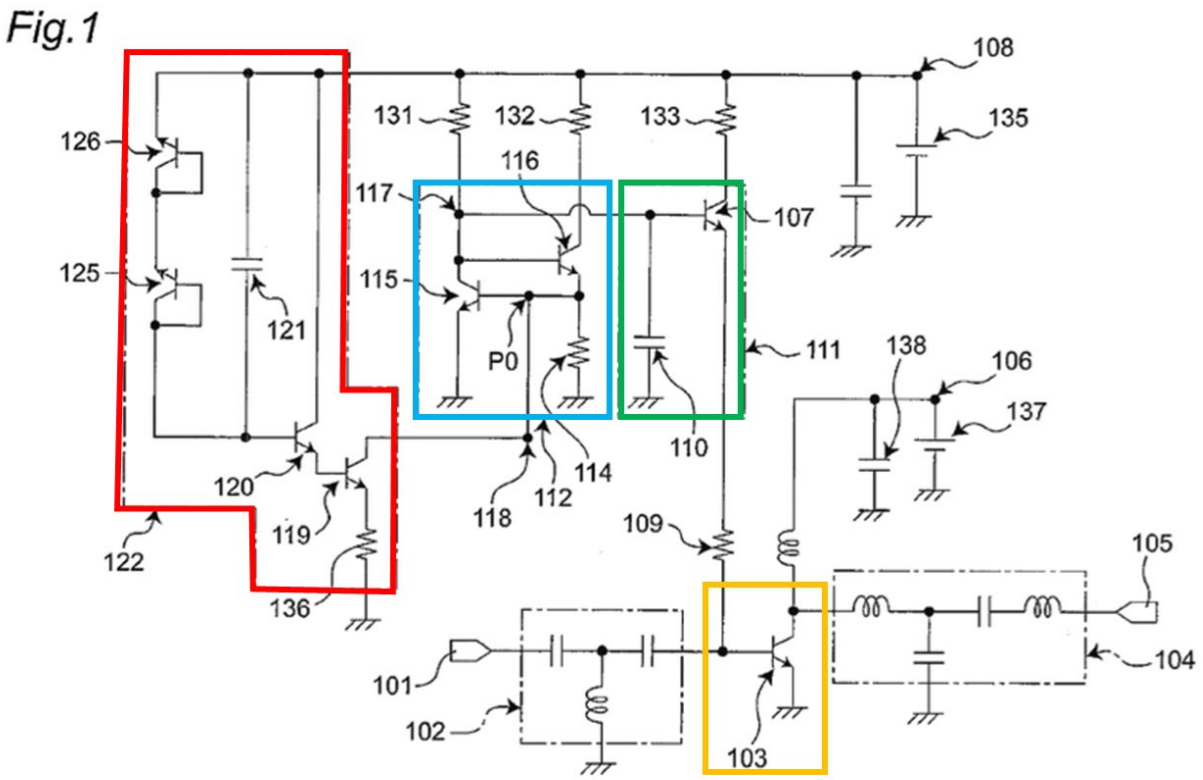

Ishimaru at Fig. 1 (annotated).

60. As explained further in Section XII.B, a POSITA would appreciate the benefits of not including all circuits in one package, attaching to the same package substrate, or packaging at all. The disclosure of Ishimaru relates to high-frequency power amplifiers used in wireless radio communication devices. Due to the high frequency of transmitted signals and the wireless communication channel's physical conditions, these power amplifiers are highly sensitive to resistance, capacitance, and inductance intrinsic to interfaces through which the signals are transmitted. *See* Section XII.B. Such attached resistance, capacitance, and inductance (also referred to as "parasitic elements") can vary significantly depending on whether the power amplifier die/chip is packaged in a module or directly mounted on a printed circuit board (also referred to as "bare-die application"). In general, a packaged die/chip has more parasitic

elements than the same IC with bare-die application due to interconnect components such as wire bonds. Thus, the power amplifier design disclosed by Ishimaru would have had better high-frequency performance when implemented as a bare-die application with relatively less parasitic elements compared to a packaged module. *See* Section XII.B. Ishimaru is plainly silent on any of these and does not teach or suggest whether the disclosed circuit should be implemented into a single packaged module, as claimed.

61. As such, Ishimaru does not disclose these limitations, explicitly or inherently. Because Ishimaru by itself does not disclose these limitations, and because Dr. Ricketts does not contend that these limitations are obvious based on Ishimaru alone, Ishimaru does not render claims 14, 15, 17, or 20 of the '563 patent obvious.

2. Ishimaru does not teach or suggest "*a bias circuit configured to receive a power amplifier enable signal and to generate a bias signal that biases the power amplifier*"

62. Ishimaru does not disclose "*a bias circuit configured to receive a power amplifier enable signal and to generate a bias signal that biases the power amplifier*" as required by claims 14, 15, 17, and 20, neither expressly nor inherently. When addressing this claim requirement, which the Ricketts Opening Report refers to "element [14.2.2]," Dr. Ricketts opines that Ishimaru's "control voltage from voltage source 135" is the claimed power amplifier enable signal (see Dr. Ricketts' marked up Figure 1 from Ishimaru from the Ricketts Opening Report, reproduced below). Ricketts Opening Report at ¶ 176.

[redacted]

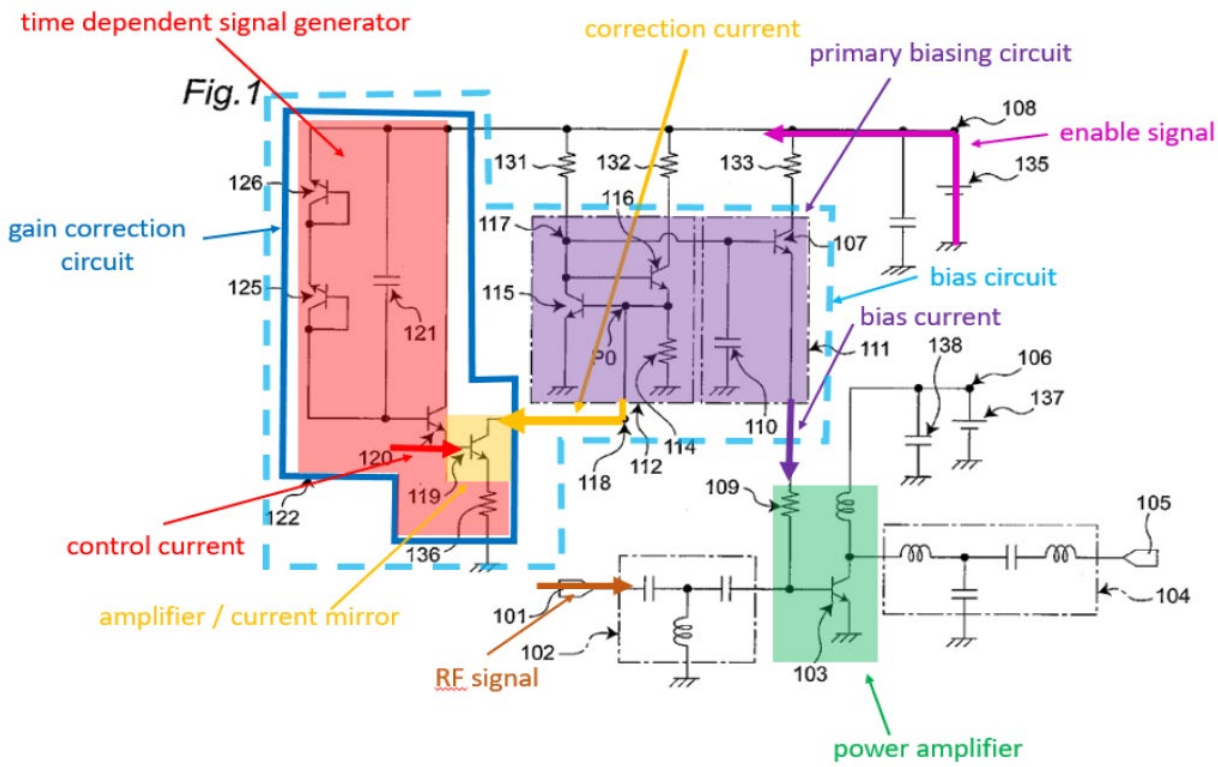

Ricketts Opening Report at ¶ 176. I disagree.

63. As Dr. Ricketts appears to concede, Ishimaru discloses two "power sources," denoted by the common power source symbol ("⊥") understood by a POSITA. Ricketts Opening Report at ¶ 177; Roland E. Thomas et al., "The Analysis & Design of Linear Circuits" (7th ed. 2012) ("Thomas") at 19 (Figure 2-6):

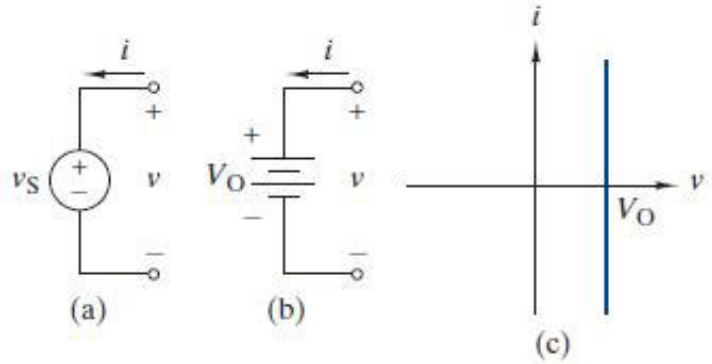

FIGURE 2–6 *Circuit symbols and i–v characteristic of an ideal independent voltage source: (a) Time-varying. (b) Constant (Battery). (c) Constant source i–v characteristics.*

Dr. Ricketts refers to control voltage source 135 as an "enable signal" (Ricketts Opening Report at ¶ 176), but this is incorrect. Ishimaru never refers to the voltage source 135 as an "enable signal."

64. The citation to Ishimaru that the Ricketts Opening Report provides as allegedly relating to an enable signal is Ishimaru's paragraph 24, which merely states: "the control voltage source [135] that controls turn-on and -off of the power amplification." Ricketts Opening Report at ¶ 177. Dr. Ricketts appears to equate powering on/off with enable/disable, and a power/voltage source with an enable signal. This is incorrect.

65. An "enable" is a specific feature well understood in the field to a POSITA as distinct from powering on/off—the purpose of an enable signal is to activate a system, subsystem, or a component, that separately has a power source applied to it. As a POSITA would have known, a system, subsystem, or component can be powered on but disabled (consuming some amount of power but remaining inactive) or powered on and enabled. One reason for having a separate enable signal distinct from a power source is that a power source is typically slow when switching between powered-on and powered-off states due to the capacitance at the power source itself and from the components connected to it, which slows down how quickly it can power on and power off. Ishimaru depicts its control voltage source 135 as having a capacitor (highlighted below) connected to it, which will slow down the rise and fall times, namely how quickly the voltage of control voltage source 135 can rise and fall to power on and off.

[redacted]

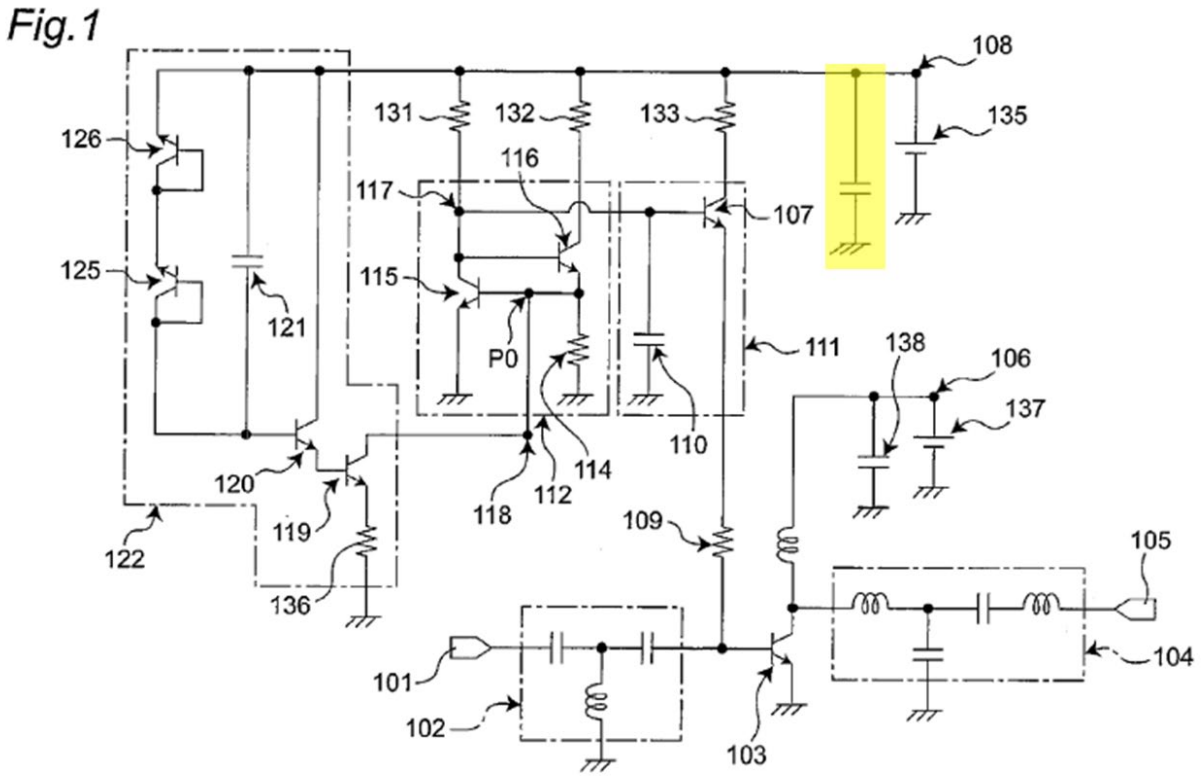

Ishimaru at Fig. 1 (highlighted).

66. As a POSITA would have appreciated that a voltage source with slow rise and fall times like Ishimaru's control voltage source could not be used as an enable signal. For example, if a power source is turned off (for example, to place a subsequent circuit in a "0" state) and then, before the voltage output from the power source falls below a certain level, turned back to on (to place the subsequent circuit in a "1" state), components powered by that power source would not be completely powered off during the transition, which can result in the circuit powering up from an unknown state and incorrectly conveying a "1" state instead of a "0" state in the subsequent circuit.

67. The concept of toggling the power amplifier with an enable signal without turning on/off the power source is well described in the '563 patent. For example, the '563 patent states

that "the power amplifier bias block can receive an enable signal that can be used to enable or disable the power amplifier so as to ***pulse*** the power amplifier's output." '536 patent at 4:29-31. The separate enable signal allows for efficient control of the power amplifier by the baseband processor, especially for complex systems with multiple power amplifiers for different wireless communications, such as Wi-Fi, WLAN, GSM, CDMA, W-CDMA, LTE, or EDGE. '536 patent at 5:43-54, 9:42-47 ("the enable signal ENABLE can be ***selectively controlled*** so as to pulse the output of the power amplifier"), 7:22-34 ("[t]he power amplifier bias block 30 can receive an enable signal ENABLE from the baseband processor 34 and a battery or power high voltage V_{CC} from the batter 21 …"), Fig. 3A (depicting power amplifier bias block 30 receiving an enable signal ENABLE from baseband processor 34). Each power amplifier needs to be able to switch between a transmitting and non-transmitting state quickly using an enable signal, so that the other power amplifiers in the same system would not unintentionally be enabled at the same time and inadvertently transmit unwanted signals, thereby degrading performance. Unlike an enable signal that enables and disables a power amplifier, a voltage source that turns the entire power amplifier on and off would be too slow to accurately pulse the power amplifier's output. The '563 patent also uses the terms "activate" and "deactivate" when referring to the enable signal enabling/disabling the power amplifier, indicating an operation in addition to turning the power amplifier on and off using a voltage source. '536 patent at 8:26-46.

68. An enable signal has completely different current needs than a power source. An enable signal performs a signaling function, specifically to signal whether a circuit or component should be enabled or disabled, and thus only needs a relatively small amount of current. By contrast, for Ishimaru's circuit to work, the current from control voltage source 135 should be relatively high, as it powers the bias current to the power amplifier transistor 103. As shown in

[redacted]

Fig. 1 of Ishimaru below, the bias current to the power amplifier transistor 103 has to come from voltage source 135 through transistor 107.

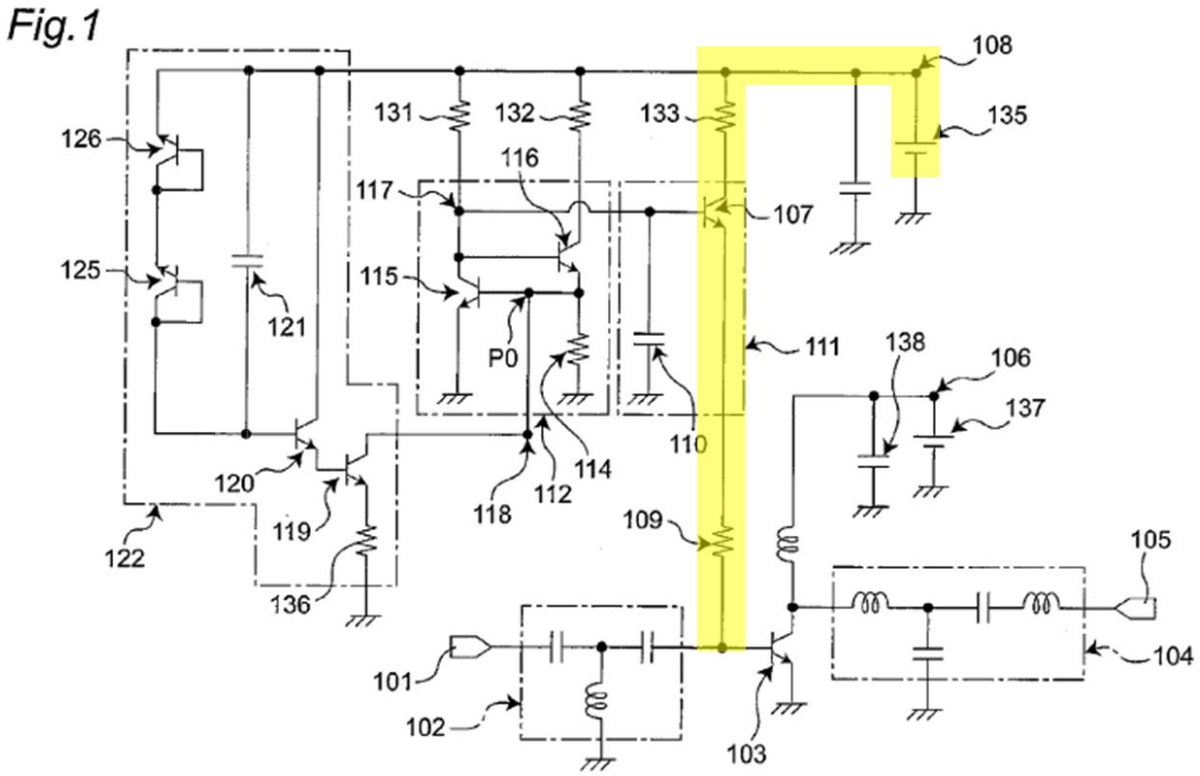

Ishimaru at Fig. 1 (highlighted). That is, the control voltage source 135 has to supply the full bias current to the power amplifier transistor 103, which is why Ishimaru uses a power source to provide sufficient current. In contrast, in the ’563 patent, the bias current (I_{BIAS}) is sourced from a separate power supply (V_{CC}) that can remain always on and supply sufficient current to the power amplifier, allowing for a separate, low-current enable signal ENABLE to control transistor 95.

[redacted]

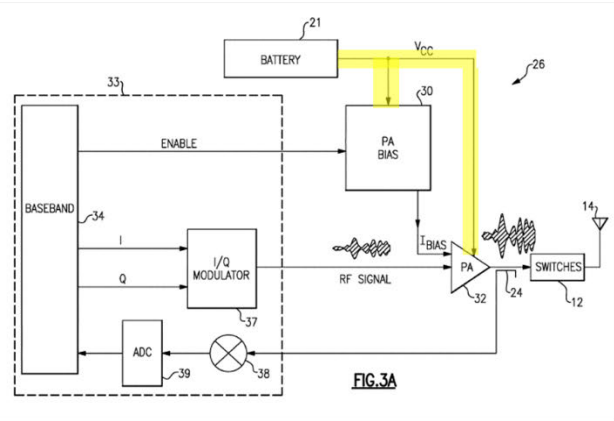

FIG.3A

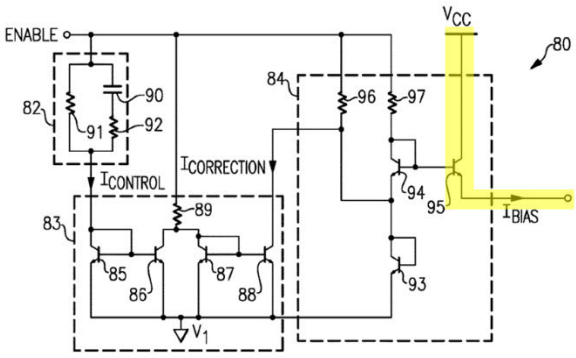

FIG.5

’563 patent at Figs. 3A and 5 (highlighted); [redacted]

69. In short, an enable “signal” is not the same thing as a voltage “source.” A voltage source is typically a battery or a regulated voltage derived from a battery that provides a constant voltage. ’563 patent at 7:22-34. [redacted] Ishimaru consistently uses the term “source” for both the control voltage source 135 and the DC power source 137, indicating that both are voltage/power sources. *See* Ishimaru at ¶¶ 19-24, 28-31, 42, 44, 52, claims 2-3, An enable signal is an electrical signal that can be in a high state or low state, for the purpose of signaling that other components or subcircuits should be enabled or disabled (activated or deactivated). *See, e.g.*,

[redacted]

’563 patent at 8:26-46. Typically, an enable signal is sent by a processor that controls or coordinates the other components or subcircuits. ’563 patent at 7:22-34, Fig. 3A.

70. This concept is also described in the ’563 patent. For example, the ’563 patent explains that “the power amplifier bias block 30 can receive an enable signal **ENABLE** from the baseband processor 34 ***and*** a battery or power high voltage ***V_{CC}*** from the battery 21,” indicating that an enable signal is separate from a voltage source. ’536 patent at 7:22-34, 8:26-46, 9:32-47, 10:39-47, 12:3-25, Figs. 3A, 3B, 4, 5. This is also shown in the ’563 patent’s Figure 3A below, which shows that power amplifier bias block 30 receives an enable signal (in red) that is separate from its voltage source V_{CC} (in blue).

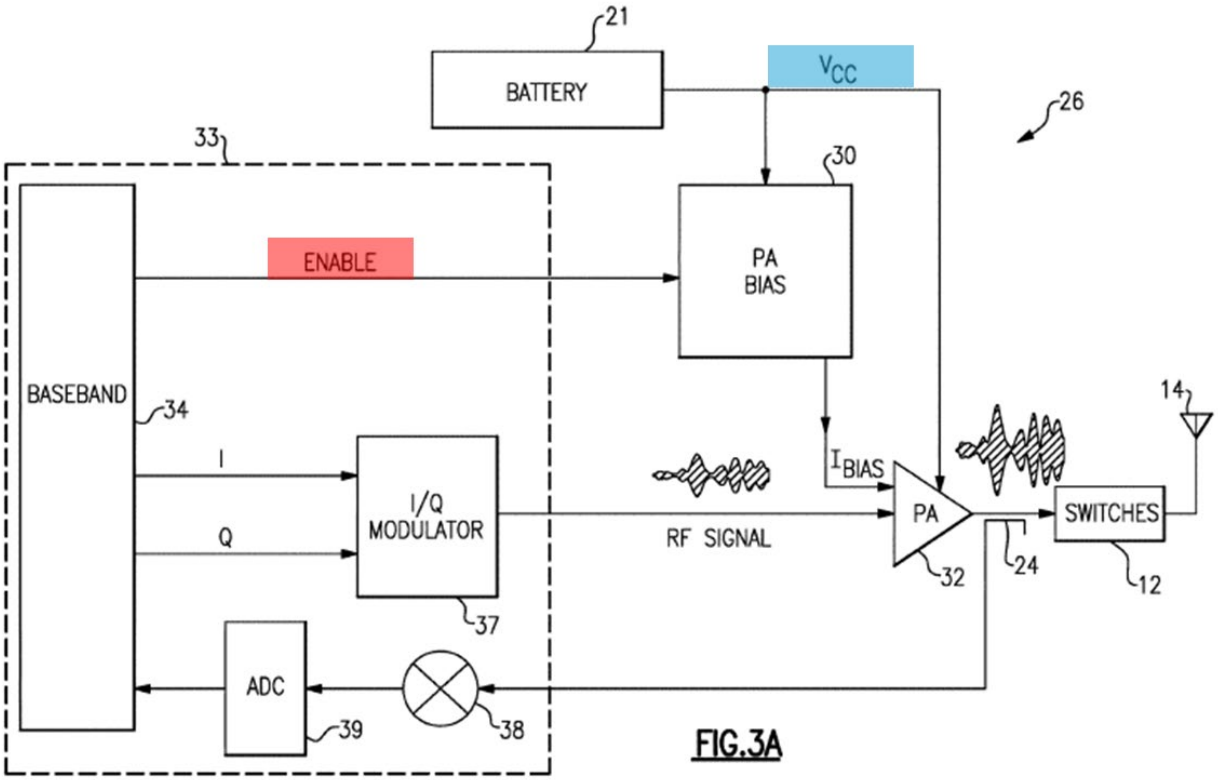

’563 patent at Fig. 3A. The ’563 patent also states that the power consumption can be “***reduced*** when the enable signal ENABLE is low,” but not cut completely to zero. Because the ’563

[redacted]

patent contemplates that the circuit can be disabled/deactivated (via the enable signal) but still consume power (via the power source), the ’563 patent not only discloses that the power source (V_{CC}) and the enable signal (ENABLE) are separate, but contemplates modes of operations that are only possible because they are separate. ’536 patent at 11:59-61. For example, when the power source is on but the enable signal is low, most of the circuitry is disabled or deactivated, while some circuitry remains on due to its connection to the power source. This way, slower components need not be power-cycled every time a power amplifier is enabled and disabled, making the pulsing of a power amplifier output more efficient through an enable signal. This approach saves power consumption by disabling most components that do not affect the power amplifier’s ability to pulse its output as much.

71. In addition, a POSITA would have appreciated that an “enable” is a separate signal from a power source. For example, below, HMC7748 (2 GHz to 6 GHz, 25W Power Amplifier Module) from Analog Devices shows an “**EN**” pin (enable pin) to connect to an enable signal separate from the power supply pins (**12V** and **28V**).

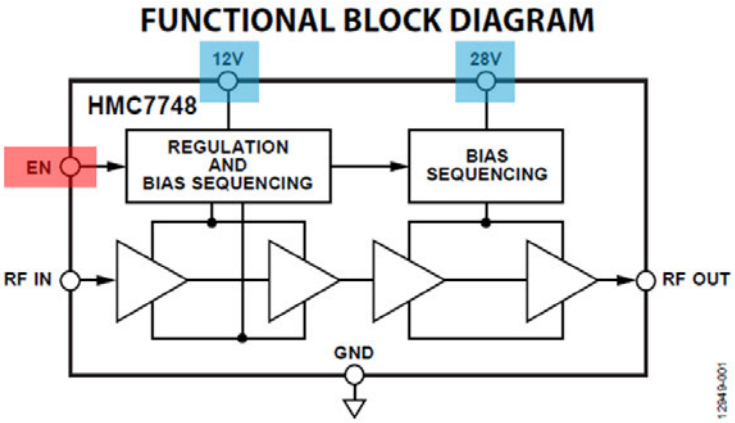

Figure 1.

HMC7748 Datasheet at 1 (highlighted).

72. Dr. Ricketts also cites Ishimaru's paragraph 31, which states in part, "[a]ccording to the power amplifier of this embodiment, by electric charge flowing into the capacitance element at a rise time of the control voltage of the control voltage source (upon turn-on of the amplifier), a current transiently (temporarily) flows into the collector of the fifth transistor [(transistor 119)], causing the voltage value of the collector to lower." Ricketts Opening Report at ¶ 178. Dr. Ricketts apparently cites this disclosure to argue that the "control voltage from source 135 being turned on" is a "power amplifier enable signal." *Id*. Dr. Ricketts' argument is incorrect for at least two reasons.

73. First, the control voltage source 135 is simply a power source, not an enable signal, for all the reasons set forth above. Second, to the extent Dr. Ricketts were to contend that the reference to the "rise time of the control voltage from the control voltage source" somehow means that there is an enable signal in Ishimaru, this too is wrong. Powering on a power source means that the power source has a rise time, and this reference in Ishimaru is a reference to powering on a power source, not to an enable signal changing states. The "rise time" in this paragraph and the rest of Ishimaru is always mentioned with reference to the control voltage "source" (*see* Ishimaru at ¶¶ 19-24, 28-31, 42, 44, 52, claims 2-3), which a POSITA would understand as a rise time of the power supply rail. Ishimaru's rise time is merely a reference to the (often long) time taken by a power source to power on. That a power source has a rise time does not mean that the power source is signaling to a power amplifier whether it should be enabled or disabled. As such, a power source, even one having a rise time, is not a "power amplifier enable signal" as recited in claim 14.

74. In paragraph 345, Dr. Ricketts attempts to rebut Skyworks' interrogatory responses regarding the lack of the claimed power amplifier enable signal in Ishimaru,

mistakenly alleging that Skyworks is advancing new claim construction arguments. Ricketts Opening Report at ¶ 345. This is also incorrect. The claim recites "to receive a power amplifier enable signal," not to be powered on by a voltage source as in Ishimaru.

75. As such, Ishimaru fails to disclose this limitation. Because Ishimaru by itself does not disclose this limitation of a bias circuit that uses a power amplifier enable signal as claimed, and because Dr. Ricketts does not contend that this limitation would have been obvious to a POSITA based on Ishimaru alone, Ishimaru alone does not render obvious claim 14 of the '563 patent. Because Dr. Ricketts does not contend that any other reference discloses this limitation of a bias circuit that uses a power amplifier enable signal as claimed, Dr. Ricketts has failed to establish that claim 14 of the '563 patent is invalid as obvious.

76. In addition, because Ishimaru fails to disclose a "*power amplifier enable signal*" for the reasons discussed above, Ishimaru also fails to disclose "*a gain correction circuit configured to generate a control current in response to activation of the power amplifier enable signal and to mirror the control current to generate a correction current*" (element [14.2.2.1] according to Ricketts Opening Report) and "*a primary biasing circuit configured to generate the bias signal based on the correction current and the power amplifier enable signal*" (element [14.2.2.2] according to Ricketts Opening Report).

3. Ishimaru does not teach or suggest "*a gain correction circuit configured to generate a control current in response to activation of the power amplifier enable signal and to mirror the control current to generate a correction current.*"

77. Dr. Ricketts opines that Ishimaru discloses this limitation (element [14.2.2.1] according to Ricketts Opening Report). I disagree for the reasons below.

78. ***First***, Ishimaru does not disclose "*a gain correction circuit configured to generate a control current in response to activation of the power amplifier enable signal*," as recited in

claim 14, because Ishimaru does not disclose a "power amplifier enable signal" for the reasons explained in Section XII.A.2 above.

79. ***Second***, Ishimaru does not disclose "*a gain correction circuit configured . . . to mirror the control current to generate a correction current*," as recited in claim 14. Dr. Ricketts opines that Ishimaru's transistor 119 is a current mirror that is "*configured to ... mirror the control current to generate a correction current*." Ricketts Opening Report at ¶ 186. I disagree. Transistor 119 in Ishimaru is not "configured … to mirror" a current, and for this reason, Ishimaru fails to disclose this claim limitation. As I explain below, transistor 119 is incapable of mirroring or replicating a current.

80. Dr. Ricketts contends that transistor 119's base current (I_B) is a "control current" and its collector current (I_C) is a "correction current," and that transistor 119 "is configured to replicate (reproduce, duplicate, reflect, etc.) *i.e.*, *mirror* the current at its input (the base of transistor 119) to generate the current at its output (the collector of transistor 119)." Ricketts Opening Report at ¶¶ 186-187. I disagree. As Dr. Ricketts concedes, transistor 119 has a beta (often denoted by the Greek letter β), which is the ratio between its output (collector current (I_C)) and its input (base current (I_B)). *Id*. at ¶ 190. If transistor 119's output were actually a replication, reproduction, or duplication of transistor 119's input, as Dr. Ricketts alleges, then transistor 119's beta should be a fixed value, so that the ratio between the output and input remains fixed and constant, allowing transistor 119 to mirror its input to generate its output. However, transistor 119 is actually incapable of mirroring because the beta of a bipolar junction transistor (BJT), like transistor 119, varies widely, meaning the size of its output relative to its input varies widely, for multiple reasons. For instance, the beta of a BJT like transistor 119 varies due to manufacturing conditions, causing the collector current (I_C) of transistor 119 to vary

[redacted]

from transistor to transistor and thus from circuit to circuit when implemented. Harrison at 53-56 ("Gain [of a BJT] is a variable parameter that is difficult to control in processing and manufacturing. As a result, manufacturers normally provide only a minimum gain specification. The particular process will yield a range of gains, where any one device's value may typically range from, say, 100 to 350. … Devices with higher gains, or with gains close together, may cost more. Small-signal transistors tend to have gains ranging from around 60 to several hundred, whereas power transistors tend to have much lower gains, typically less than 50."). Thus, when transistor 119 is connected as shown in Ishimaru's Figure 1, the same circuit (when manufactured multiple times) will have different alleged correction currents (I_C of transistor 119). In addition, the beta of a particular BJT like transistor 119 also varies during operation within a single circuit based on the amount of collector current (I_C), base current (I_B), and operating temperature. Harrison at 53-56 ("To be meaningful, the gain should be specified at a particular collector-emitter voltage (V_{CE}), collector current (I_C), base current (I_B), and temperature."). Therefore, even focusing on a single circuit using transistor 119, the beta will vary depending on these conditions, meaning that the alleged correction current will not be a fixed multiple of the alleged control current, but will instead vary based on operating conditions, as shown below:

[redacted]

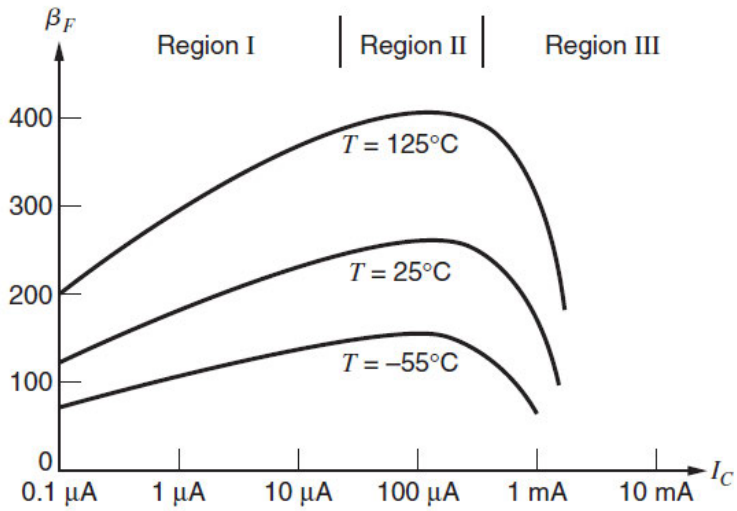

Figure 1.15 Typical curves of β_F versus I_C for an *npn* integrated-circuit transistor with 6 μm^2 emitter area.

Gray at 24 (Figure 1.15).

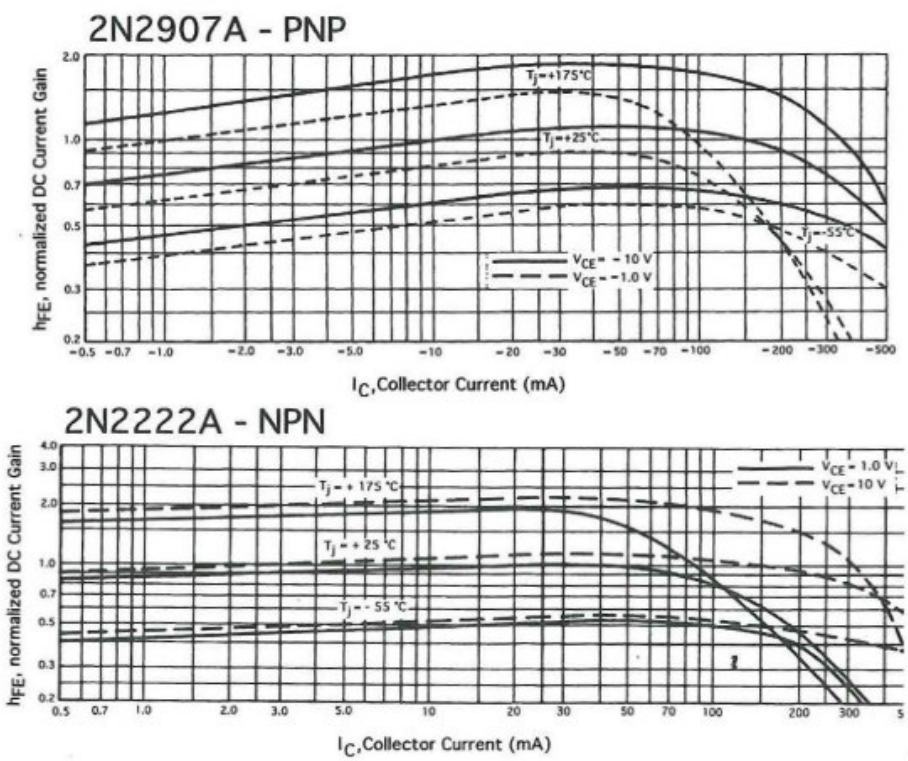

Figure 4.6. *Showing how temperature affects h_{FE}, and therefore the collector current for two popular general-purpose transistors, the PNP 2N2907A (upper graph) and the NPN 2N2222A (lower graph). Notice particularly how as temperature increases, that h_{FE} also increases, irrespective of whether the collector-emitter voltage is 1 volt or 10 volts.*

Harrison at 56 (Figure 4.6) ("Showing how temperature affects h_{FE} [(beta)]"). Because transistor 119's beta varies during operation, it is incapable of mirroring its input. Even the textbook cited by Dr. Ricketts acknowledges that the beta of a BJT is not a fixed value, calling the beta "poorly-controlled" and "not very linear," as I explained above. Gilbert at 242. In other words, the output of transistor 119 is not a mirrored version (scaled or not), but rather an indeterminate set of possible currents. Transistor 119, therefore, is not configured to mirror. This is, in fact, why a single BJT is not used as a current mirror in the field—because it fails as a known current source.

81. Dr. Ricketts states that a "quality metric [] is not present in the claims, or the proposed constructions for current mirror." Ricketts Opening Report ¶ 347. This is incorrect. The term "to mirror" in claim 14 requires that the claimed circuit be configured to "mirror." Dr. Ricketts would have any circuit that happens to have an input and an output, and thus a ratio between them, even if that ratio is indeterminate, unknown, or widely varying, qualify as a circuit that is configured to "mirror," even if the output fails to track the input. This would give the word "mirror" no meaning, and is plainly incorrect.

82. Dr. Ricketts' opinion that Ishimaru's transistor 119 is configured to mirror or replicate is based on two references, Gray and Gilbert. Ricketts Opening Report at ¶¶ 187-189. Neither reference supports Dr. Ricketts' opinion that transistor 119 is configured to mirror.

83. Dr. Ricketts' citation to Gray is misleading. Gray, which is a very popular textbook used to teach circuits at the college level, never states that a single transistor can be a current mirror or is configured to mirror. Gray's Fig. 4.1(a), which the Ricketts Opening Report cites in paragraph 70, is a block diagram representation of a current mirror, simply showing that there is an input and output to the current mirror "block":

[redacted]

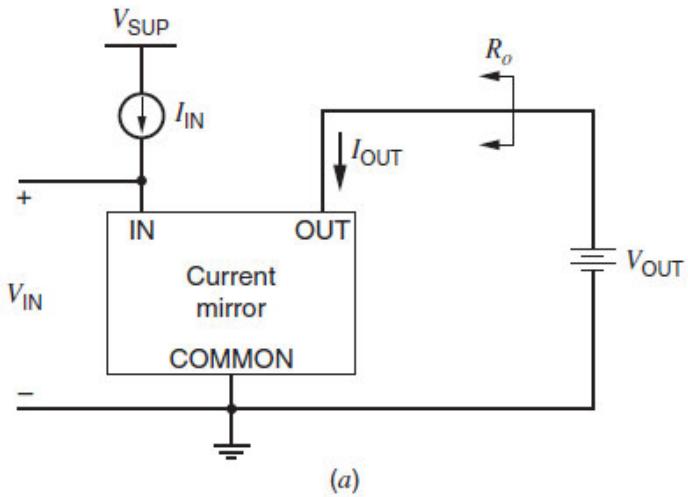

Gray at 252 (Figure 4.1(a)). A skilled artisan reading Gray would understand that there can be multiple components inside this block, including at least two transistors having their base or gate terminals tied together, and the current mirror as a whole is represented as a block with an input and an output, as shown in Gray's Fig. 4.1(a). [redacted]

[redacted] In fact, Gray states, in the very next chapter, that the "***simplest*** form of a current mirror consists of ***two*** transistors." Gray at 253 (emphases added).

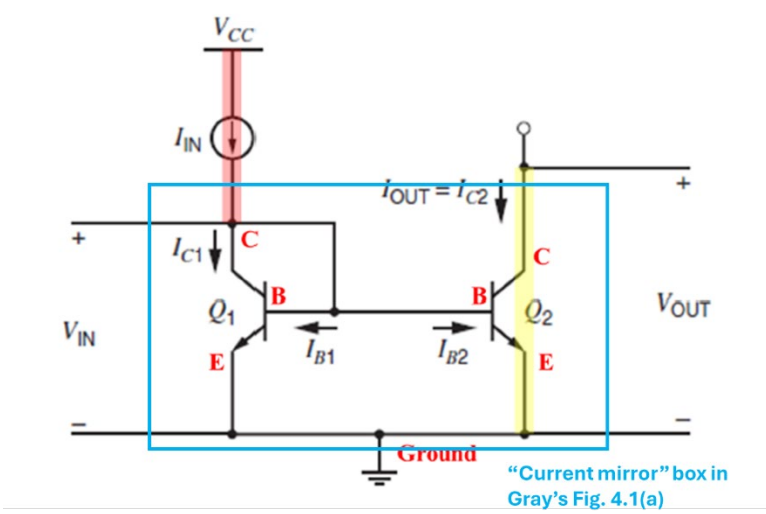

Gray at 253 (Figure 4.2). Read as a whole, a skilled artisan would thus understand Gray's current mirror block in Figure 4.1(a) to include within it at least the simplest form of a current mirror consisting of two transistors as shown in Figure 4.2. In short, nothing in Gray states that a single transistor—such as transistor 119—is a current mirror or is configured to "mirror."

84. With respect to Gilbert, Dr. Ricketts relies in part on Figure 6.1(a), shown below. Ricketts Opening Report ¶ 188. Like Gray, Figure 6.1(a) of Gilbert starts with the symbolic block diagram and states that it is a "generalized" form of a current mirror:

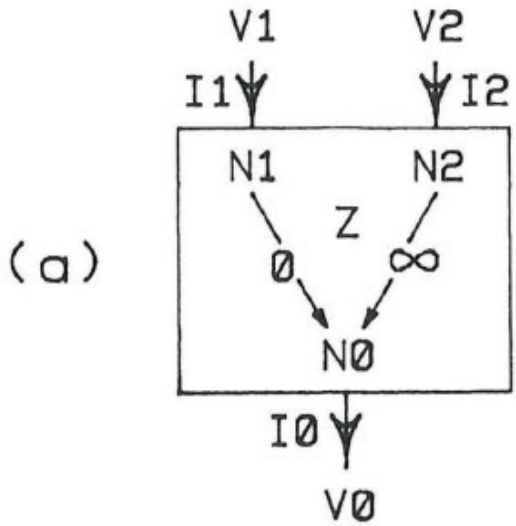

Gilbert at 240 (Figure 6.1(a)). All that Gilbert's Figure 6.1(a) shows is that there is an input current I_1 and output current I_2. Nothing in Figure 6.1(a) implies that a single transistor can be a current mirror or a circuit configured to "mirror." In fact, Gilbert states, "[f]or now, we will assume the basic mirror to be built with NPN transistor**s**," plural, indicating that Gilbert's "basic mirror" includes at least two transistors having their base or gate terminals tied together. Gilbert at 240.

85. Dr. Ricketts also relies on Gilbert's "proposal" that, "[i]n the simplest possible scenario, a single BJT can be used as a mirror: node N1 (of Figure [6.1a]) is the base, N2 the

collector and [N0] the emitter." Ricketts Opening Report at ¶ 188, citing Gilbert at 242-243. This does not support Dr. Ricketts' position that a single transistor can be a current mirror or is a circuit configured to "mirror." Indeed, contrary to Dr. Ricketts' argument, Gibert itself confirms that a single BJT is neither a "current mirror" nor a circuit configured to "mirror" by referring to its BJT discussion as a "proposal" to which there are numerous "practical objection(s)" that are "all true." For example, explaining these "objections," Gilbert states: "[o]f course, the practical objection to this proposal is that the mirror ratio, M, is much higher than generally needed and poorly-controlled, being just the common-emitter current-gain, β, and not very linear." Gilbert at 242. A skilled artisan reading Gilbert would thus understand Gilbert to identify three "true" reasons why a single BJT is ***not*** a current mirror or capable of mirroring. First, the beta of a typical BJT is much higher to be used as a current mirror. Second, the beta is poorly controlled, between circuit to circuit due to manufacturing, and within a circuit affected by operating temperature and the amount of base and collector current during the operation, to be considered as a current mirror. Current mirrors are used as a current source, which as to be reliable and predictable. Third, the gain (or the beta) of a transistor is also not linear, as shown by the profiles below, making it even harder to predict the output.

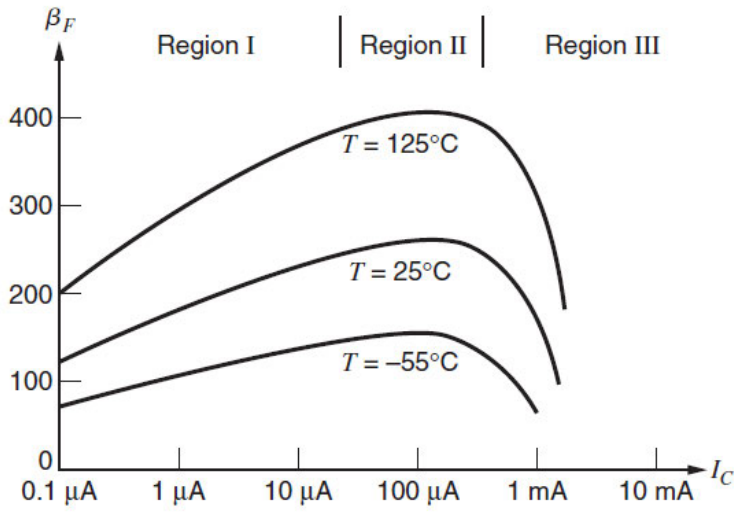

Figure 1.15 Typical curves of β_F versus I_C for an *npn* integrated-circuit transistor with 6 μm^2 emitter area.

[redacted]

Gray at 24 (Figure 1.15).

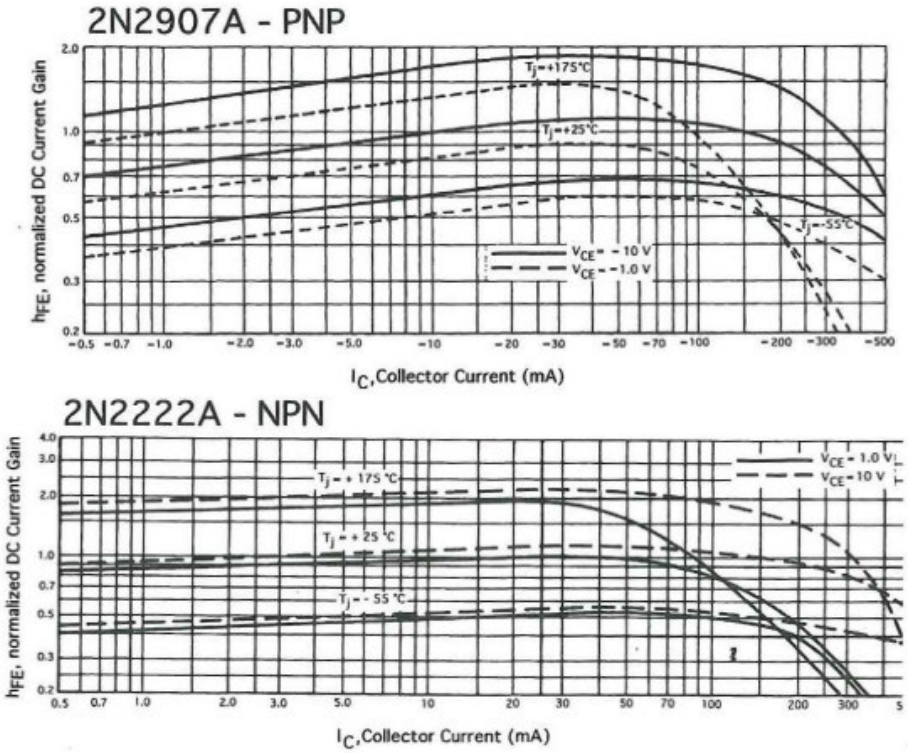

Figure 4.6. *Showing how temperature affects h_{FE}, and therefore the collector current for two popular general-purpose transistors, the PNP 2N2907A (upper graph) and the NPN 2N2222A (lower graph). Notice particularly how as temperature increases, that h_{FE} also increases, irrespective of whether the collector-emitter voltage is 1 volt or 10 volts.*

Harrison at 56 (Figure 4.6).

86. Furthermore, Gilbert observes that because a single BJT is "[u]ncontrolled," it is "rarely used." Gilbert at 244. Gilbert also does not cite any reference to back up the idea that a single BJT can be a current mirror. Therefore, a POSITA would not consider a single transistor can be a circuit configured to "mirror" or can be a "current mirror."

87. Also contrary to Dr. Ricketts' argument, in the next chapter, Gilbert states, "[t]he ***basic*** NPN current mirror (Figure 6.7a) is the simple theme from which endless variations and transformations can be spun … and we will begin here with the translinear view of this mirror."

Gilbert at 251. The "basic" NPN current mirror shown in Gilbert's Fig. 6.7(a) has two transistors, as shown below:

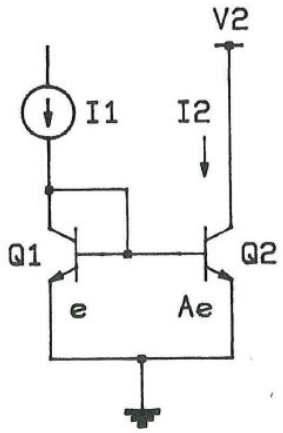

(a)

Gilbert at 251 (Fig. 6.7(a)). This again confirms that a single transistor such as transistor 119 is not a current mirror and is not a circuit configured to "mirror" as Dr. Ricketts suggests.

88. In addition to Gilbert, which confirms the three "true" reasons why a single BJT is ***not*** a current mirror or capable of mirroring as discussed above, I am not aware of any reference or textbook that teaches that a single transistor is a current mirror or is a circuit configured to mirror. Ishimaru does not describe transistor 119 as a current mirror or as a circuit configured to mirror. In fact, there is no discussion of a "current mirror" or of "mirroring" a current anywhere in Ishimaru.

89. Rather, as I set forth in my declaration in support of Complainants' Claim Construction Brief ("Wentzloff Claim Construction Declaration"), the technical literature consistently describes a current mirror as including at least two transistors with their bases or gates tied together. Kaplan at 159 (""[a] circuit in which the current on one side is forced to be a replica of that of the other side" which is "[a]ccomplished, for instance, by the bases and emitters

of two bipolar junction transistors being connected together."); Gray at 251-276 (showing a variety of current mirrors starting with two transistors with their bases or gates tied together); Illingworth at 110 (showing current mirror with its base terminals tied together); Alon at 6:52-53 ("the transistor 274 and the transistor 282 form a current mirror"); Gilbert at 251 ("The basic NPN current mirror (Figure 6.7a) is the simple theme from which endless variations and transformations can be spun."); *see also* Wentzloff Claim Construction Declaration at ¶¶ 69-76.

90. Moreover, Dr. Ricketts also teaches current mirrors in his online lectures, and he starts the discussion with two transistors ("let's go and start with this diode current mirror," showing two transistors).

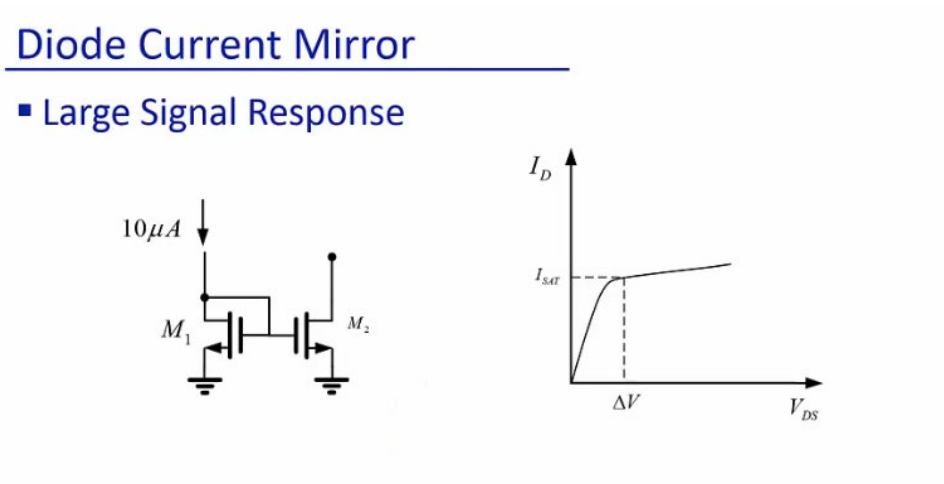

Dr. Ricketts' "Analog IC and Data Converters Module 3: Current Mirrors" Lecture at 9:50.[2] Notably, Dr. Ricketts' lecture does not teach or suggest that the single transistor introduced earlier in his same lecture is a current mirror or that it is configured to mirror.

91. ***Third***, Ishimaru does not disclose "a gain correction circuit configured to generate a control current . . . and to mirror the control current to generate a correction current," as recited in claim 14, because Ishimaru does not disclose a "control current." Dr. Ricketts opines that the

[2] https://rickettslab.org/adc/lectures-2/lectures-2/; *see also* https://perma.cc/84RY-PWK3

identified base current to transistor 119 is a "control current" because it is supposedly "used to control the correction to the biasing of Ishimaru's PA [(power amplifier)] to compensate for gain variation." Ricketts Opening Report at ¶ 180. He further opines that "a POSITA reviewing Ishimaru understood that the base current applied to transistor 119 is an $I_{CONTROL}$ [] because it controls generation of transistor 119's collector current $I_{CORRECTION}$ [], which, in turn, ultimately controls I_{BIAS} (purple) generated by bias circuit 111 that is applied to the base of amplifier transistor 103." *Id*. at ¶ 185. I disagree.

92. Contrary to Dr. Ricketts' contentions, Dr. Ricketts' alleged "control current"—the input to the base of transistor 119—cannot control the alleged "correction current"—the output of transistor 119— for the reasons I explained above. The '563 patent explains that the ***control*** aspect of a "***control*** current" input to a current mirror is its control of the output such that the output mirrors the input with an intended amount of gain, and is not just any amplified version of the input amongst a wide range of uncontrolled gain factors. '563 patent at 11:63-12:2 ("the current mirror 83 is configured to amplify the control current $I_{CONTROL}$ by a factor ranging between about 5 to about 50, for example, about 10. As used herein, the term current mirror can refer to current amplification circuits including a plurality of current mirrors combined (e.g., cascaded) to achieve a target gain"). In other words, a "control current" must be used to "control" the output current, whereas a single transistor like transistor 119 has, in the words of the Gilbert reference upon which Dr. Ricketts relies, an "uncontrolled" gain. Gilbert at 244. Dr. Ricketts never explained how an "uncontrolled" system can have a "control" current. It cannot, and for at least this reason, the input to the base of transistor 119 cannot be a "control current."

93. More specifically, the base current of transistor 119, even as connected, is not a "control current" because the gain of Ishimaru's transistor 119 is uncontrollable (see citations

above). The collector current of transistor 119 (the alleged correction current) is therefore unpredictable, rather than controlled. In Ishimaru, the current from capacitor 121 is multiplied by a factor of β (an unknown and uncontrollable factor) of transistor 120 to produce the emitter current of transistor 120, which then becomes the base current of transistor 119 (the alleged "control current"). *See* Gray at 23-25; Gilbert at 242; Harrison at 53-56; Illingworth at 38; Ricketts Opening Report at ¶¶ 192, 266 ("the beta factor, β, [is] e.g., 60 to 150 or higher [and practically] can be up to 500"); This base current of transistor 119 is again multiplied by a factor of β (also unknown and uncontrollable) of transistor 119. The fact that the current in Ishimaru that Dr. Ricketts cites as the alleged "control current" sits between two betas that vary both from circuit to circuit and within the circuit in Ishimaru so as to be unknown and uncontrollable further demonstrates that this current cannot be the claimed "***control*** *current*" of claim 14.

94. ***Fourth***, the file history of the '563 patent makes clear that Ishimaru's transistor 119 is not a current mirror that is "configured to … mirror the control current to generate a correction current," as required by claim 14, and that the claims of the '563 patent are patentable over Ishimaru.

[redacted]

95. During prosecution of the application that issued as the ’563 patent, the Examiner was aware of and considered the same exact figure and circuit of Ishimaru that Dr. Ricketts now relies on for his invalidity positions, and granted the claims of the ’563 patent, including those asserted here, over that disclosure. As I explained in my Opening and Supplemental Reports, this claim was allowed over U.S. Patent No. 8,692,619 to Wakita, cited by the Examiner in an Office Action rejecting the pending claims over Wakita. Wentzloff Opening Report at ¶¶ 99-105; Wentzloff Supplemental Report at ¶¶ 99-105; ’563 File History, Office Action 02/27/2017 at 2-5 (Skyworks_ITC_000023451-454). The claim was allowed after Skyworks amended it to recite “configured … to ***mirror*** the control current to generate a correction current.” ’563 File History, Amendment and Response to Non-Final Office Action 05/16/2017 (Skyworks_ITC_000023639-640), amended claim 14; ’563 File History, Notice of Allowability (Skyworks_ITC_000023690-691).

96. Notably, as shown below, the circuit depicted in Wakita’s Fig. 6 is exactly the same as that of Ishimaru’s Fig. 1. They both have the same circuit components, connected in the same configuration, with the same subcircuits/blocks denoted by dashed boxes, and even the reference numerals annotating the figures are almost all identical, with just the first digit being different (*e.g.*, transistors 519 and 520 are identical to transistors 119 and 120).

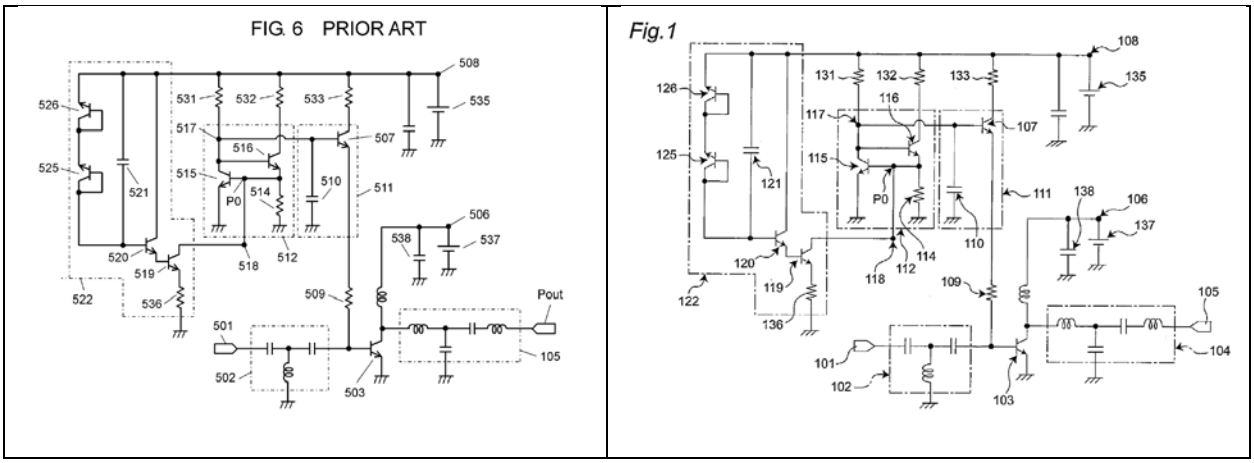

Wakita Fig. 6	Ishimaru Fig. 1

That Wakita Fig. 6 depicts the identical circuit of Ishimaru Fig. 1 is understandable because Wakita describes Fig. 6 as depicting the Japanese Patent Application to which Ishimaru claims priority, describing this Japanese Patent Application as "PRIOR ART." *See* Wakita at 1:37-38 ("Unexamined Japanese Patent Publication No. 2009-200770 [to Ishimaru] (hereinafter PTL 1)"), 1:47 ("FIG. 6 illustrates a circuit diagram disclosed in PTL 1."), Fig. 6. In particular, Wakita refers to and describes Unexamined Japanese Patent Publication No. 2009-200770, which was filed as Japanese Patent Application No. 2008-39735, to which U.S. Pat. App. Pub. No. 2009/0212863, the Ishimaru reference Dr. Ricketts asserts as prior art, claims priority.

97. The Examiner thus reviewed Wakita in sufficient detail to issue an Office Action rejecting the originally filed claims as obvious over Wakita, including its disclosure of the exact same Ishimaru circuit that Dr. Ricketts now relies on for his invalidity positions.[3] '563 File History, Office Action 02/27/2017 at 2-5 (Skyworks_ITC_000023451-454). Despite the Examiner's awareness of the Ishimaru circuit, which is explicitly described as "Prior Art" in Wakita, the Examiner found the issued claims of the '563 patent, including those asserted here, patentable over the prior art. This shows that Ishimaru, including its transistor 119, does not disclose a circuit "to mirror the control current" as claimed in claim 14 and does not invalidate the asserted '563 patent claims.

[3] I note that Dr. Ricketts apparently has also reviewed the File History of the '563 patent, including the originally filed claims (Ricketts Opening Report at ¶ 45), the Examiner's rejection of them over Wakita (*id*. at ¶ 47), Skyworks' response amending the claims including the claim which later issued as claim 14 (*id*. at ¶ 48), and the Examiner's reasons for allowing the amended claims (*id*. at ¶ 50), but did not address the fact that the Examiner reviewed the exact circuit (disclosed in Wakita) that Dr. Ricketts now relies upon and found the claims patentable over that circuit.

98. That the Examiner considered Ishimaru, the reference that Dr. Ricketts now relies upon for his invalidity positions, and granted the claims of the ’563 patent over Ishimaru, is independently confirmed elsewhere in the file history of the ’563 patent. When Skyworks filed a response to the Office Action rejecting the pending claims over Wakita, Skyworks also filed an Information Disclosure Statement disclosing Ishimaru to the Examiner. ’563 File History, Information Disclosure Statement 05/16/2017 at 3 (Skyworks_ITC_000023648). The Examiner later, before allowance of the claims, indicated to Skyworks that the Examiner had considered Ishimaru. ’563 File History, List of References Cited by Applicant and Considered by Examiner 07/17/2017 at 3 (Skyworks_ITC_000023661).

99. Further, the file history of the ’563 patent makes clear that a transistor like Ishimaru’s transistor 119, contrary to Dr. Rickett’s positions, is not “configured to … mirror the control current to generate a correction current,” as required by claim 14. In an Office Action rejecting the pending claims over Wakita, the Examiner contended that the Wakita’s speed-up circuit 122, depicted in Fig. 1 below, is a “gain correction circuit” and that its output (specifically the output of circuit 202 within speed-up circuit 122) is a “correction current.” ’563 File History, Office Action 02/27/2017 at 3 (Skyworks_ITC_000023452) (Examiner contending that Wakita discloses “a gain correction circuit (122 of Fig. 1 can be read as the claimed circuit OR at least it is functionally equivalent to it) configured to generate (via output of 202 of Fig. 1) a correction current”). The Examiner took the position that the collector current of a BJT, specifically of transistor 119 of Wakita’s Fig. 1, is a “correction current.” Wakita at Fig. 1.

[redacted]

FIG. 1

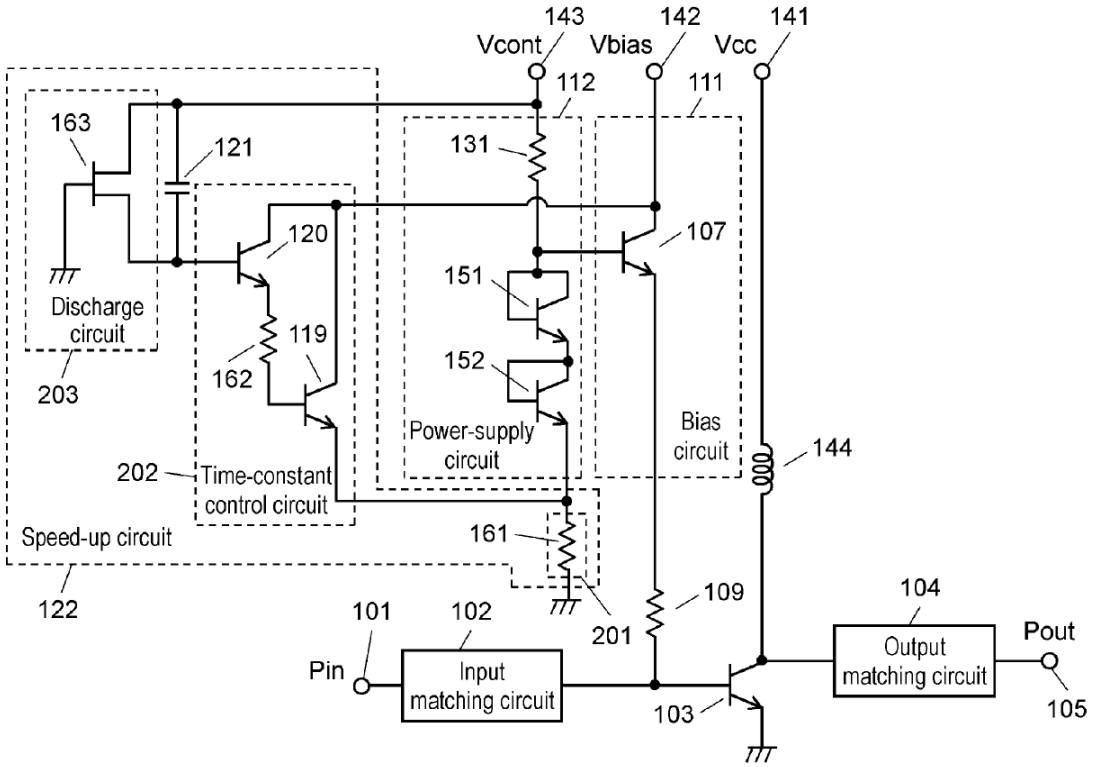

100. In response, Skyworks amended claim 14 to recite "***mirror[ing] [a] control current*** to generate a correction current" ('563 File History, Amendment and Response to Non-Final Office Action 05/16/2017 at 4 (Skyworks_ITC_000023639)) and argued that Wakita failed to disclose or suggest the claims as amended. *Id*. at 7-9 (Skyworks_ITC_000023642-644). In other words, consistent with my opinion here, Skyworks argued during prosecution of the '563 patent that a single BJT like transistor 119 cannot be configured to mirror a control current to generate a correction current. In fact, even two cascaded BJTs like transistors 119 and 120 cannot be configured to mirror a current or act as a current mirror. The Patent Examiner specifically agreed with Skyworks on this point, emphasizing the mirroring claim limitation in the "reasons for allowance" by stating that the prior art of record "fails to fairly teach or suggest the claimed circuit comprising, among other limitations and unobvious limitations of '… <u>and to mirror the control current to generate a correction current</u>…' structurally and functionally

[redacted]

interconnected with other limitations in the manner as cited in the claim." '563 File History, Notice of Allowability at 2-3 (Skyworks_ITC_000023690-691) (underlining in original).

101. I note that Ishimaru's transistor 119 is configured the same way as Wakita's transistor 119: Wakita's transistors 119 and 120, like Ishimaru's transistors 119 and 120, are cascaded BJTs, such that the emitter of transistor 120 is input to the base of transistor 119, to generate the output of a speedup circuit 122 for a power amplifier. Just as Wakita's transistor 119 is not a current mirror configured to mirror a control current, Ishimaru's transistor 119 likewise is not a current mirror configured to mirror a control current.

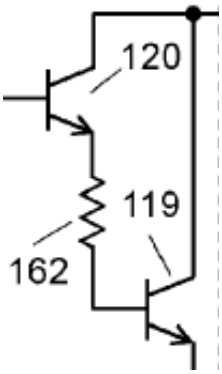 Wakita at Fig. 1.	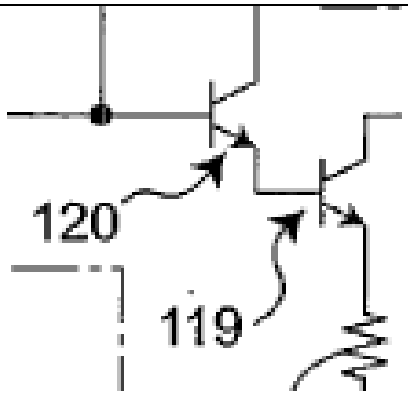 Ishimaru at Fig. 1.

As the File History leading to the issuance of the '563 patent confirms, including the statements from the patentee Skyworks and from the Patent Examiner outlined above, Ishimaru's transistor

119, just like Wakita's transistor 119, cannot mirror a control current to generate a correction current, as required by claim 14.[4]

102. Similarly, during the '101 patent prosecution, the Examiner rejected the original independent claim based on the reading that Alon's single transistor 204 "can be read as the claimed current amplifier," but allowed the dependent claim, which recited "wherein amplifying the control current further includes amplifying the control current ***using a current mirror*** of the current amplifier." '101 File History, Application as Filed at 28 (Skyworks_ITC_000023158); Wentzloff Opening Report at ¶¶ 93-98. In other words, the Examiner allowed the claims—with its "to mirror" or "current mirror" limitation—over the same type of prior art disclosure and theory Dr. Ricketts relies on for his analysis.

103. For the reasons set forth above, Ishimaru does not disclose "*a gain correction circuit configured to generate a control current in response to activation of the power amplifier enable signal and to mirror the control current to generate a correction current*."

104. Because Ishimaru does not disclose "*mirror[ing] the control current to generate a correction current*," Ishimaru also does not disclose "*a primary biasing circuit configured to generate the bias signal based on the correction current and the power amplifier enable signal*" (element [14.2.2.2] according to Ricketts Opening Report).

[4] I note that Dr. Ricketts review of the File History of the '563 patent apparently included reviewing Wakita and the Examiner's rejection of the original claims over Wakita (Ricketts Opening Report at ¶ 47), Skyworks' response amending the claims to recite mirroring a control current and arguing that Wakita did not disclose or suggest the amended claims (*id*. at ¶¶ 48-49), and the Examiner's reasons for allowance emphasizing the mirroring language in the allowed claims (*id*. at ¶ 50), but reached the conclusion that "the Examiner did not discuss, apply, or otherwise meaningfully" address the disclosure of Ishimaru (*id*. at ¶51), despite that disclosure being present in Wakita and despite the Examiner applying the same components—cascaded BJTs in a speed-up circuit—that Dr. Ricketts now relies upon.

4. Ishimaru does not render obvious claims 15 and 20

105. Because Ishimaru does not render obvious claim 14, as discussed above, Ishimaru does not render obvious claims 15 and 20, at least based on their dependency on claim 14.

5. Ishimaru does not render obvious claim 17

106. Because Ishimaru does not render obvious claim 14, as discussed above, Ishimaru does not render obvious claim 17, at least based on its dependency on claim 14. In addition, Dr. Ricketts contends that Ishimaru discloses the limitation of claim 17, namely "***a current mirror*** *configured to generate the correction current by mirroring the control current, the current mirror configured to receive the* ***power amplifier enable signal***." Ricketts Opening Report at ¶ 213. Specifically, Dr. Ricketts contends that Ishimaru's transistor 119 is the claimed "current mirror." *Id*. I disagree.

107. As an initial matter, Ishimaru does not disclose "*to generate the correction current by mirroring the control current*," as recited in claim 17, at least for the same reasons it does not disclose "*to mirror the control current to generate a correction current*," as recited in claim 14, as discussed above in Section XII.A.3. And Ishimaru does not disclose "*the current mirror configured to receive the power amplifier enable signal*," as recited claim 17, at least for the same reasons it does not disclose a "*power amplifier enable signal*," as recited in claim 14, as discussed above in Section XII.A.2.

108. Furthermore, Ishimaru does not disclose a "current mirror," as recited in claim 17, under any party's proposed claim construction for the term. Ishimaru does not mention current mirror anywhere in the patent.

109. Ishimaru does not disclose a "current mirror" under Skyworks' proposed claim construction of the term. Skyworks' proposed claim construction of the term "current mirror" is "one or more circuits configured to mirror a current, which can be configured to achieve a target

[redacted]

gain, ***having at least two transistors with their base or gate terminals tied together***." Post-Hearing Joint Claim Construction Chart at 2. Under this construction, Ishimaru's transistor 119 does not mirror any current because it does not have "at least two transistors"; it is a single transistor. As I stated in my Opening and Supplemental Reports and Wentzloff Claim Construction Declaration, the simplest form recognized as a current mirror is with two transistors as shown below. Wentzloff Opening Report at ¶¶ 58-67; Wentzloff Supplemental Report at ¶¶ 58-67; Wentzloff Claim Construction Declaration at ¶¶ 35-44.

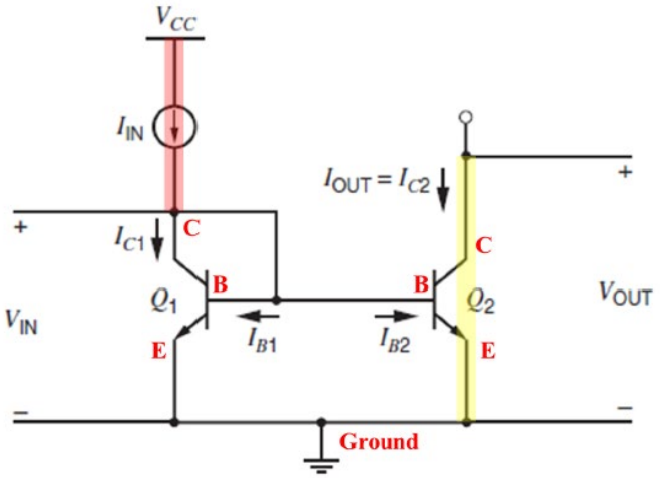

Skyworks_ITC_000022923-Skyworks_ITC_000022953 (Analysis and Design of Analog Integrated Circuits) at Skyworks_ITC_000022940, Figure 4.2 ("The simplest form of a current mirror consists of two transistors. Fig. 4.2 shows a bipolar version of this mirror."). In addition, Ishimaru does not disclose two transistors "with their base or gate terminals tied together." In a current mirror, by forcing the base-emitter voltage of transistors Q_1 and Q_2 to be the same by connecting the base of the transistors, the reference current I_{IN} (highlighted in red) is **replicated** to the output current I_{C2} (highlighted in yellow). Wentzloff Claim Construction Declaration at ¶¶ 35-44. In other words, without the connection tying the two bases (or gates in the case of two MOSFETs) together, the reference current is not replicated or mirrored to the output current.

110. Ishimaru also does not disclose a current mirror under both Skyworks' proposed construction ("one or more circuits configured to mirror a current, which can be configured to achieve a target gain, having at least two transistors with their base or gate terminals tied together") and Respondents' and Staff's proposed construction ("one or more circuits configured to mirror a current, which can be configured to achieve a target gain"). Post-Hearing Joint Claim Construction Chart at 2. Both constructions require "one or more circuits configured to mirror a current." However, as I discuss above in Section XII.A.3, Ishimaru's transistor 119 is incapable of mirroring a current, and thus is not the claimed "current mirror." Both constructions also require that the "one or more circuits . . . can be configured to achieve a ***target*** gain." However, Ishimaru's transistor 119 cannot be configured to achieve a target gain as required by these proposed claim constructions.

111. Ishimaru is silent whether transistor 119 achieves a target gain. Dr. Ricketts opines that the beta of transistor 119 is a "target gain," based on his view that it can be configured to a target value by "designing the voltage and current biasing of the transistor 119 (within the constraints of the circuit), such that a targeted and desired [beta] β (from within an available range, e.g., of about 60 to 150 or more), can be achieved." Ricketts Opening Report at ¶ 192. However, a BJT, like transistor 119, cannot be configured to achieve a particular beta value within its range of potential beta values, contrary to what Dr. Ricketts claims. The beta of a BJT like transistor 119 is consistently described in the art as having a large range of potential values that are defined by the BJT manufacturing process. *See*, *e.g.*, Illingworth at 38 ("β is always greater than unity and practical values up to 500 are used."); Grebene at 172 ("β in the range of 100-200"). Dr. Ricketts also acknowledges that the beta of Ishimaru's transistor 119 can range from "60 to 150 or more." Ricketts Opening Report at ¶ 192; *see also* Amended Appendix

B-03 to KCT's and Grand Chip's Disclosure of Amended Invalidity Contentions, dated January 29, 2025 at 38 (KCT stating "[a] POSITA was aware that the [beta] β of transistors 119 and 120 would be, e.g., 60 to 150 or more"). Gray also explains in detail that the beta of a transistor is a function of processor parameters like doping densities N_D, N_A, and states that "[t]ypical values of β_F for *npn* transistors in integrated circuits are 50 to 500, whereas lateral *pnp* transistors [] have values 10 to 100." Gray at 12 (equation 1.48). Circuit designers are forced to accept the value of the beta defined by the manufacturing process, whatever it is, and accept that it will vary with temperature, among other factors. Therefore, instead of relying on the varying beta, the current mirrors are designed to be independent of transistors' beta, by using two transistors—that way, the current gain is controlled by the sizing of the transistors.

112. Beta necessarily varies within a range, regardless of how transistor 119 is biased or otherwise connected, during operation of the circuit, at least because normal manufacturing variations can significantly impact the actual beta value of any particular BJT. Harrison at 53-56 ("Gain is a variable parameter that is difficult to control in processing and manufacturing. As a result, manufacturers normally provide only a minimum gain specification. The particular process will yield a range of gains, where any one device's value may typically range from, say, 100 to 350. … Devices with higher gains, or with gains close together, may cost more. Small-signal transistors tend to have gains ranging from around 60 to several hundred, whereas power transistors tend to have much lower gains, typically less than 50."); Gilbert at 243 ("β increases with V2 due to base-width modulation, and in the customary BJT model would be exactly doubled when the collector bias voltage, VCB (roughly, V2), is equal to the forward Early voltage, VAF."); *see also* Gray at 24 (Figure 1.15); Harrison at 56 (Figure 4.6). The beta value's susceptibility to manufacturing variation is why BJT datasheets provide a range for the beta

[redacted]

value and typically describe beta (also referred to as DC current gain or h_{FE}) as a "characteristic," meaning a constraint that a circuit designer has to take into account, which is the opposite of a "target" value that the designer can configure the circuit to achieve. *See, e.g.,* BU508AF Datasheet at 1:

Electrical Characteristics T_C=25°C unless otherwise noted

Symbol	Parameter	Test Condition	Min.	Typ.	Max.	Units
V_{CEO}(sus)	* Collector-Emitter Sustaining Voltage	I_C = 100mA, I_B = 0	700			V
BV_{EBO}	Emitter-Base Breakdown Voltage	I_E = 10mA, I_C = 0	5			V
I_{CES}	Collector Cut-off Current	V_{CE} = 1500V, V_{BE} = 0			1	mA
I_{EBO}	Emitter Cut-off Current	V_{EB} = 5V, I_C = 0			10	mA
h_{FE}	* DC Current Gain	V_{CE} = 5V, I_C = 4.5A	2.25			
V_{CE}(sat)	* Collector-Emitter Saturation Voltage	I_C = 4.5A, I_B = 2A			1	V
V_{BE}(sat)	* Base-Emitter Saturation Voltage	I_C = 4.5A, I_B = 2A			1.5	V

* Pulse Test: PW = 300µs, duty cycle = 1.5% Pulsed

In fact, KCT, relying on Harrison and Gilbert, has admitted that the ability to control Ishimaru's transistor 119's beta value is "poor[]" and that the "configurability" of Ishimaru's transistor 119's beta is "limited," which is the opposite of being configurable to target a specific beta value. Amended Appendix B-03 to KCT's and Grand Chip's Disclosure of Amended Invalidity Contentions, dated January 29, 2025at 38 (KCT stating "Ishimaru's circuit is constrained by the limited configurability of the β (amplification factor) of transistors 119 and 120 . . . . While the β values provide amplification, and, for transistor 119 provide a mirror ratio, that mirror ratio is 'not very linear' and 'poorly-controlled'"). Because transistor 119 cannot be manufactured and designed to have a targeted and desired beta value from within its range, Ishimaru's transistor 119 cannot be configured to achieve a target gain, and is thus not a "current mirror" under any party's proposed construction of the term.

113. Dr. Ricketts cites two paragraphs from Ishimaru (¶¶ 55-56) that he contends support his analysis that transistor 119, "as connected" in Ishimaru, is a current mirror configured to achieve a target gain. Ricketts Opening Report at ¶¶ 192-193. However, neither of

the paragraphs Dr. Ricketts cites support his statement that the beta is a "target." Ishimaru paragraphs 55-56 are about adjusting the capacitance value of capacitor 121 to "adjust the time duration which the bias fed to the amplifier transistor 103" and is not about controlling or configuring beta. I reproduce the two paragraphs of Ishimaru below:

> In the power amplifier of this embodiment also, the capacitance value of the capacitance element 121 of the speedup circuit 122 is adjusted so as to cancel transient variations in gain due to the temperature variations at a start of power amplification. As a result of this, deterioration of the linearity due to variations of amplification gain can be canceled so that the value of dynamic EVM (error vector magnitude) can be improved.
>
> In addition, the capacitance element 121 of the speedup circuit 122 may be a capacitance element whose capacitance value is changeable. In this case, changing the capacitance value of the capacitance element 121 makes it possible to adjust the time duration during which the bias fed to the amplifier transistor 103 at a start of amplification operation by the speedup circuit 122 via the bias power source section composed of the power source circuit 112 and the bias circuit 111 is kept increased.

Ishimaru at ¶¶ 55-56. Notably, neither of these paragraphs mentions transistor 119 at all nor explains any of its properties. At best, these paragraphs describe how quickly the amplified current can be applied to bias amplifier transistor 103 by adjusting the value of capacitor 121, and convey nothing whatsoever about the beta of transistor 119, let alone whether there is a specific target value for it.

114. I note that ***not*** having a target gain for transistor 119 is actually one of the stated benefits of Ishimaru's proposed solution. Ishimaru explains that the method of controlling a bias current to a power amplifier, based on temperature sensed by a sensing component near the power amplifier, comes with spacing and signal leakage problems. Ishimaru at ¶ 5 ("close placement of the temperature sensing element and the amplifier transistor may cause an amplification signal to leak to the temperature sensing element, with a possibility of causing unexpected malfunction."). Instead of trying to control the bias current to achieve a specific

target based on a sensed temperature (e.g., as a feedback loop), Ishimaru proposes a "speedup circuit" that "increas[es] the bias fed to the first transistor [(power amplifier)]" "without using any temperature sensing element." Ishimaru at ¶¶ 7, 12; *see also* Abstract, ¶ 24. That is, Ishimaru's proposed solution removes the temperature sensor, thus avoiding the problems it identifies from having such a sensor, and no longer has a specific target based on a sensed temperature. *See* Ishimaru at ¶¶ 4-5 (identifying problems with temperature sensors), Abstract, 7, 24 (proposing a solution without using a temperature sensor). Instead, Ishimaru simply uses transistor 119 with its wide potential range of gains to quickly (hence the name, "speedup circuit") provide some amount of current to amplifier transistor 103. *See, e.g.,* Ishimaru at ¶ 36 ("the speedup circuit transiently increases the bias fed to the first transistor").

B. Claims 14, 15, 17, and 20 Are Not Obvious over Ishimaru in View of Ichitsubo

115. Ishimaru does not disclose the limitations of claims 14, 15, 17, and 20 as I explain above in Section XII.A, which is incorporated here by reference.

1. Ichitsubo does not disclose the limitations of claims 14, 15, 17, and 20

116. Ichitsubo does not disclose or teach the claim limitations missing from Ishimaru. Specifically, Ichitsubo does not disclose or teach, and the Ricketts Opening Report does not allege that Ichitsubo discloses or teaches, any of the following limitations:

- "a bias circuit configured to receive a power amplifier enable signal and to generate a bias signal that biases the power amplifier" (element [14.2.2] according to Ricketts Opening Report);
- "a gain correction circuit configured to generate a control current in response to activation of the power amplifier enable signal and to mirror the control current to generate a correction current" (element [14.2.2.1] according to Ricketts Opening Report);

- "a primary biasing circuit configured to generate the bias signal based on the correction current and the power amplifier enable signal" (element [14.2.2.2] according to Ricketts Opening Report); and
- the limitations of claims 15, 17, and 20.

See Ricketts Opening Report at ¶¶ 153-254. Accordingly, because neither Ishimaru nor Ichitsubo teaches any of the foregoing claim elements, these references, whether considered alone or in combination, fail to render obvious any of claims 14, 15, 17, or 20 of the '563 patent.

2. A POSITA would not have been motivated to combine Ishimaru and Ichitsubo

117. Dr. Ricketts opines that Ichitsubo discloses "[a] packaged module" (element [14.0] according to Ricketts Opening Report), "a package substrate" (element [14.1] according to Ricketts Opening Report), and "an integrated circuit attached to the package substrate" (element [14.2] according to Ricketts Opening Report). *See* Ricketts Opening Report at ¶¶ 161-165. However, the Ricketts Opening Report fails to demonstrate that claims 14, 15, 17, and 20 would have been obvious to a POSITA over Ishimaru in view of Ichitsubo, including because it fails to demonstrate a motivation or reason for why a POSITA would have modified Ishimaru to include the claimed components arranged in the claimed manner attached to a package substrate in a packaged module. Indeed, what little reasoning the Ricketts Opening Report does offer with respect to the motivation of a POSITA is based on improper hindsight using the '563 patent as a roadmap, and is inconsistent with what a POSITA would have understood at the time of the priority date of the '563 patent.

118. Specifically, Dr. Ricketts opines that "[a] POSITA would have been motivated to combine Ishimaru's teaching of a [power amplifier] PA and bias circuit with Ichitsubo's packaging teachings of implementing a [power amplifier] PA and bias circuit on an IC attached

to a package substrate in a packaged module" for several reasons. Ricketts Opening Report at ¶ 129. This is incorrect and I respond below to each of Dr. Ricketts' alleged reasons.

119. ***First***, Dr. Ricketts opines that "[n]othing about the structures, methods or concepts disclosed in Ishimaru would need to be changed to implement Ishimaru's power amplifier and bias circuit on a packaged IC." Ricketts Opening Report at ¶ 130. This is incorrect. The disclosure of Ishimaru relates to high-frequency power amplifiers used in wireless radio communication devices. Due to the high frequency of transmitted signals and the wireless communication channel's physical conditions, these power amplifiers are highly sensitive to resistance, capacitance, and inductance intrinsic to interfaces through which the signals are transmitted. *See, e.g.*, Mohammed Ayad et al., "Single and dual input packaged 5.5–6.5GHz, 20W, Quasi-MMIC GaN-HEMT Doherty Power Amplifier," (2017 IEEE MTT-S International Microwave Symposium) (hereinafter, "Ayad") at 114 ("The interconnections between GaN power bars and GaAs passive MMICs and also the ones between GaAs devices and package leads are realized with wire bonds. All these interconnections networks have been defined according to the industrial rules and have been simulated on 3D EM tools in order to build multi-ports passive networks for overall DPA design."), 115 ("The design takes into account the quasi-MMIC technology constraints (key point of the design) thanks to a full 3D EM simulation of the interconnection network into the QFN environment."); V. Vassilev et al., "Integrated front-ends up to 200 GHz," (2011 IEEE MTT-S International Microwave Workshop Series on Millimeter Wave Integration Technologies) (hereinafter, "Vassilev") at 57 ("Bond wires at these frequencies present considerable inductance and require special measures to provide low return loss of the interface."). Such attached resistance, capacitance, and inductance (also referred to as "parasitic elements") can vary significantly depending on whether the power amplifier IC is packaged in a

module or directly mounted on a printed circuit board (also referred to as "bare-die application"). In general, a packaged IC has more parasitic elements than the same IC with bare-die application due to interconnect components such as wire bonds. Thus, the power amplifier design disclosed by Ishimaru would have superior high-frequency performance when implemented as a bare-die application with relatively less parasitic elements, particularly when compared to a packaged module. *See, e.g.*, Vassilev at 57 ("In our design we avoid tuning structures and focus instead on minimizing the wire inductance."), 58, Fig. 6 (showing that the high-frequency output power of the power amplifier is higher for the chip on-wafer (i.e. bare-die) compared to the chip mounted in the package). A POSITA would have understood that to implement a high-frequency power amplifier in a packaged module, additional parasitic elements must be taken into consideration when designing for the high-frequency performance of the power amplifier. Therefore, the structures, methods or concepts disclosed in Ishimaru would need to be designed differently to implement Ishimaru's power amplifier and bias circuit in a packaged IC.

120. ***Second***, Dr. Ricketts opines that "a POSITA would have been motivated by any one of the numerous and well-known advantages of packaged ICs." Ricketts Opening Report at ¶ 131. This is incorrect. For example, contrary to the Ricketts Opening Report, a POSITA would have understood, for example, that packaged ICs have ***increased***, rather than decreased, size and power consumption over bare-die applications. In general, bare-die applications are smaller and lighter since they lack the package casing. This reduces the size of wireless devices and can be advantageous in applications requiring miniaturization. As I explain above, bare-die applications offer reduced parasitic elements, which can reduce power consumption.

121. ***Third***, Dr. Ricketts opines that "a POSITA would have also been motivated by the express teachings, suggestions and motivations of Ichitsubo itself." Ricketts Opening Report at ¶

132. This is incorrect. As an initial matter, absent Dr. Ricketts' improper hindsight use of the '563 patent as a roadmap, a POSITA reading Ishimaru would have had neither reason nor motivation to look beyond Ishimaru's own teaching—including because Ishimaru purports to teach circuitry that achieves Ishimaru's stated purposes. Moreover, a POSITA at the time of the priority date of the '563 patent would have understood that compared to the packaged power amplifier ICs disclosed by Ichitsubo, bare-die applications can provide better results including, for instance, "decreasing size," "compact 3D size," and "enhanced RF amplification performance." *See* Ichitsubo at ¶ 2 ("Portable devices … are being developed in ever decreasing size for convenience of use"), ¶ 24 ("compact 3D size, and enhanced RF amplification performance"), ¶ 35 ("The PA module has a miniature size of a few millimeters."). As I explain above, the power amplifier design disclosed by Ishimaru would have had better high-frequency performance implementing bare-die application with relatively less parasitic elements, and smaller size and/or lighter weight since they lack the package casing. A skilled artisan would have had no reason to degrade these benefits of Ishimaru by attempting to change Ishimaru's design in view of Ichitsubo, and certainly would not have been motivated to do so.

122. ***Fourth***, Dr. Ricketts opines that "a POSITA would have a reasonable expectation of success in implementing Ishimaru's teachings following Ichitsubo's packaging teachings of a PA module." Ricketts Opening Report at ¶ 133. This is incorrect. As I explain above, a POSITA would have understood that to implement a power amplifier in a packaged module, additional parasitic elements must be taken into consideration when designing the power amplifier. As I explain above in Section XII.A.1, there is no reason why any of Ishimaru's subcircuits would need to be in a packaged module as claimed. Alternatively, Ishimaru's subcircuits could be implemented in two packages or attached to different substrates even if they were modified to be

packaged together. When choosing a specific solution, a POSITA would have needed to consider specific design goals and constraints. Thus, the Ricketts Opening Report does not show that a POSITA would have had a reasonable expectation of success in implementing Ishimaru's teachings following Ichitsubo's packaging teachings of a PA module.

123. Further, Dr. Ricketts opines that "a POSITA understood that the implementation of Ishimaru's speedup circuit facilitated the use of resistors and capacitors of suitable size that could be implemented in an on-chip integration with the PA." Ricketts Opening Report at ¶ 135. The Ricketts Opening Report does not show how this is relevant to whether a POSITA would have been motivated to implement Ishimaru's teachings following Ichitsubo's teachings of packaging. It is not relevant because the use of resistors and capacitors of suitable size would be no different in a packaged IC or in a bare-die IC with respect to Ishimaru. Further, by using the sizing of resistors and capacitors from the specification of the '563 patent, which is not present in Ishimaru or Ichitsubo, Dr. Ricketts improperly uses the '563 patent's teaching as a hindsight roadmap.

124. For at least the reasons above, a POSITA would not have been motivated to combine Ishimaru and Ichitsubo to form the claimed combination of the asserted '563 patent claims.

C. Claims 14, 15, 17, and 20 Are Not Obvious over Ishimaru in View of Johnson

125. Ishimaru does not disclose the limitations of claims 14, 15, 17, and 20 as I explain above in Section XII.A, which is incorporated here by reference.

1. Johnson does not disclose the limitations of claims 14, 15, 17, and 20

126. Johnson does not disclose or teach the claim limitations missing from Ishimaru. Specifically, Johnson does not disclose or teach, and the Ricketts Opening Report does not allege that Johnson discloses or teaches, any of the following limitations:

- "a bias circuit configured to receive a power amplifier enable signal and to generate a bias signal that biases the power amplifier" (element [14.2.2] according to Ricketts Opening Report);
- "a gain correction circuit configured to generate a control current in response to activation of the power amplifier enable signal and to mirror the control current to generate a correction current" (element [14.2.2.1] according to Ricketts Opening Report);
- "a primary biasing circuit configured to generate the bias signal based on the correction current and the power amplifier enable signal" (element [14.2.2.2] according to Ricketts Opening Report);
- and the limitations of claims 15, 17, and 20.

See Ricketts Opening Report at ¶¶ 153-254. Accordingly, because neither Ishimaru nor Johnson teaches any of the foregoing claim elements, these references whether considered alone or in combination fail to render obvious any of claims 14, 15, 17, or 20 of the '563 patent.

2. A POSITA would not have been motivated to combine Ishimaru and Johnson

127. Dr. Ricketts opines that Johnson discloses "[a] packaged module" (element [14.0] according to Ricketts Opening Report), "a package substrate" (element [14.1] according to Ricketts Opening Report), and "an integrated circuit attached to the package substrate" (element [14.2] according to Ricketts Opening Report). *See* Ricketts Opening Report at ¶¶ 166-172. However, the Ricketts Opening Report fails to demonstrate that claims 14, 15, 17, and 20 would have been obvious to a POSITA over Ishimaru in view of Johnson, including because it fails to demonstrate a motivation or reason for why a POSITA would have modified Ishimaru to include the claimed components arranged in the claimed manner attached to a package substrate in a

packaged module. Indeed, what little reasoning the Ricketts Opening Report does offer with respect to the motivation of a POSITA is based on improper hindsight using the '563 patent as a roadmap, and is inconsistent with what a POSITA would have understood at the time of the priority date of the '563 patent.

128. Specifically, Dr. Ricketts opines that "[a] POSITA would have been motivated to combine Ishimaru's teaching of a [power amplifier] PA and bias circuit with Johnson's teachings of SiGe heterojunction bipolar transistor (HBT) PAs and packaging of such PAs and bias circuits on an IC attached to a package substrate in a packaged module" for several reasons. Ricketts Opening Report at ¶ 137. This is incorrect and I respond below to each of Dr. Ricketts' alleged reasons. Below in Section XIII.D.2, I respond to reasons related to Johnson's teachings of SiGe heterojunction bipolar transistor (HBT) PAs.

129. ***First***, Dr. Ricketts opines that "[a] POSITA would have been motivated to combine Ishimaru's teaching of a PA and bias circuit with Johnson's packaging teachings of implementing a PA and bias circuit on an IC attached to a package substrate in a packaged module for at least the reasons set out above with respect to Ichitsubo's teachings." Ricketts Opening Report at ¶ 145. This is incorrect for at least the same reasons as I explain above in Section XII.B.2 with respect to Ichitsubo's teachings, which is incorporated here by reference.

130. Further, a POSITA at the time of the priority date of the '563 patent would have understood that compared to the "advantages in terms of performance, cost, and size" (*See* Johnson at 1605) of the packaged power amplifier ICs as disclosed by Johnson's express teachings and suggestions, bare-die applications can provide even better results. For instance, a POSITA would have understood that decreased size and power consumption may be advantages of packaged ICs over discrete components, but not over bare-die applications. In general, bare-

[redacted]

die applications are smaller and lighter since they lack the package casing. This reduces the size of wireless devices and can be advantageous in applications requiring miniaturization. Therefore, the Ricketts Opening Report has not provided sufficient motivation for why a POSITA would have implemented the claimed components arranged in the claimed manner instead of directly mounting the power amplifier IC on a printed circuit board.

131. ***Second***, Dr. Ricketts opines that "a POSITA would have a reasonable expectation of success in implementing Ishimaru's teachings following Johnson's packaging teachings of a PA module because implementing a power amplifier and bias circuit on an IC inside a packaged module was no more than the routine exercise of skill for a POSITA making the PA module simpler and more cost effective." Ricketts Opening Report at ¶ 149. This is incorrect. As I explain above in Section XII.B.2, a POSITA would have understood that to implement a power amplifier in a packaged module, additional parasitic elements must be taken into consideration to redesign the power amplifier. As I explain above in Section XII.A.1, there is no reason why any of Ishimaru's subcircuits would need to be in a packaged module as claimed. Alternatively, Ishimaru's subcircuits could be implemented in two packages or attached to different substrates even if they were modified to be packaged together. When choosing a specific solution, a POSITA would have needed to consider specific design goals and constraints. Thus, the Ricketts Opening Report does not show that a POSITA would have had a reasonable expectation of success in implementing Ishimaru's teachings following Johnson's packaging teachings of a PA module.

132. For at least the reasons above, a POSITA would not have been motivated to combine Ishimaru and Johnson to form the claimed combination of the '563 patent.

D. Claims 14, 15, 17, and 20 Are Not Obvious over Ishimaru in View of Harrison

133. Ishimaru does not disclose the limitations of claims 14, 15, 17, and 20 as I explain above in Section XII.A, which is incorporated here by reference.

1. Harrison does not disclose the limitations of claims 14, 15, 17, and 20

134. Harrison does not disclose or teach the claim limitations missing from Ishimaru. Specifically, Harrison does not disclose or teach, and the Ricketts Opening Report does not allege that Harrison discloses or teaches, any of the following limitations:

- "[a] packaged module" (element [14.0] according to Ricketts Opening Report);
- "a package substrate" (element [14.1] according to Ricketts Opening Report);
- "an integrated circuit attached to the package substrate" (element [14.2] according to Ricketts Opening Report);
- "a bias circuit configured to receive a power amplifier enable signal and to generate a bias signal that biases the power amplifier" (element [14.2.2] according to Ricketts Opening Report);
- "a primary biasing circuit configured to generate the bias signal based on the correction current and the power amplifier enable signal" (element [14.2.2.2] according to Ricketts Opening Report); and
- the limitations of claims 15, 17, and 20.

See Ricketts Opening Report at ¶¶ 222-254. Accordingly, because neither Ishimaru nor Harrison teaches any of the foregoing claim elements, these references, whether considered alone or in combination, fail to render obvious any of claims 14, 15, 17, or 20 of the '563 patent.

In addition, Harrison does not disclose or teach "to mirror the control current to generate a correction current" (element [14.2.2.1] according to Ricketts Opening Report) at least because it

does not disclose or teach a "control current" or a "correction current," let alone "to mirror the control current to generate a correction current." *Id*. at ¶¶ 224-227.

2. A POSITA would not have been motivated to combine Ishimaru and Harrison

135. The Ricketts Opening Report has not shown that Ishimaru in view of Harrison renders obvious "a gain correction circuit configured to generate a control current in response to activation of the power amplifier enable signal and to mirror the control current to generate a correction current" (element [14.2.2.1] according to Ricketts Opening Report). The Ricketts Opening Report fails to demonstrate that claims 14, 15, 17, and 20 would have been obvious to a POSITA over Ishimaru in view of Harrison, including because it fails to demonstrate a motivation or reason for why a POSITA would have modified Ishimaru to include a current mirror in addition to the claimed components arranged in the claimed manner of the '563 patent. Indeed, what little reasoning the Ricketts Opening Report does offer with respect to the motivation of a POSITA is based on improper hindsight using the '563 patent as a roadmap, and is inconsistent with what a POSITA would have understood at the time of the priority date of the '563 patent.

136. The Ricketts Opening Report makes certain statements about Ishimaru's circuit and opines that a POSITA would have been motivated to modify the speedup circuit as taught by Ishimaru to add a basic current mirror for several reasons. *See, e.g.*, Ricketts Opening Report at ¶¶ 225-227, 230, 237-244. I respond below to these statements and each of the alleged reasons.

137. ***First***, Dr. Ricketts opines that "[a] POSITA readily recognizes the coupling of the left and right sides of Ishimaru's circuit as involving a current source generated on the left side that is replicated as a current sink on the right side, which is a coupling that takes the general form of a current mirror (i.e. transistor 119 as discussed in §IX.B.1 above)." Ricketts Opening

[redacted]

Report at ¶ 226. This is incorrect. The Ricketts Opening Report's annotation of Ishimaru Fig. 1 is reproduced below.

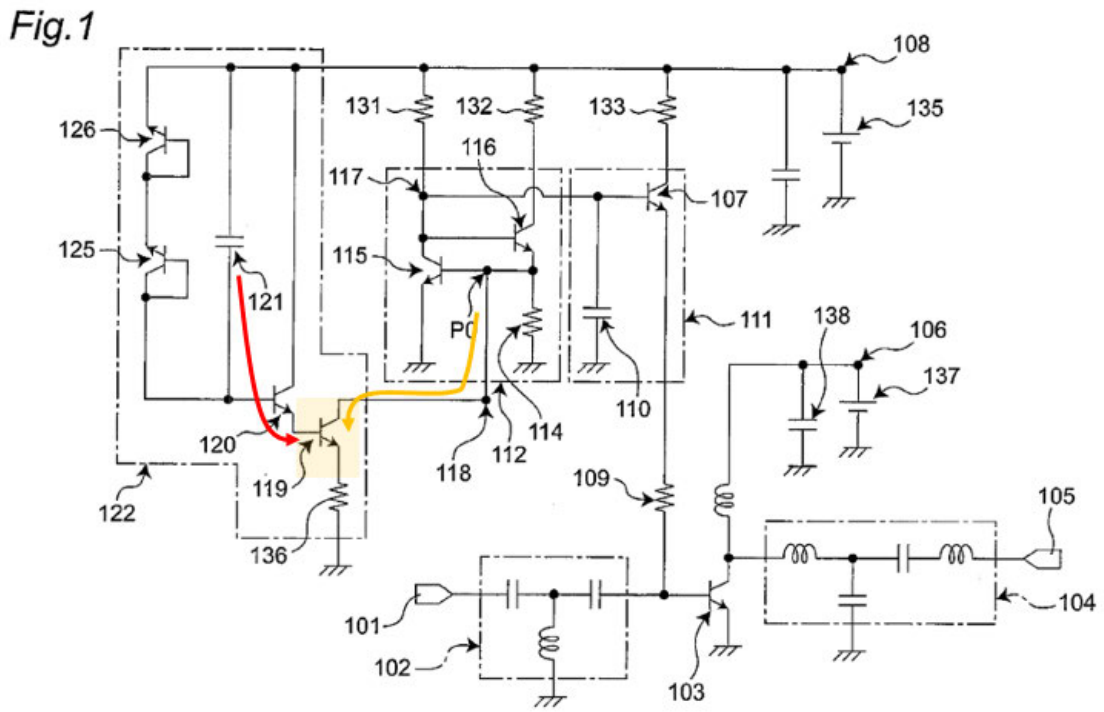

Ricketts Opening Report at ¶ 225. As I explain above in Section XII.A, Ishimaru's transistor 119 is not a current mirror and no current source is *replicated* as a current sink on the right side (emphasis added). For the same reasons as I explain above in Section XII.A, Ishimaru's transistor 120 is likewise not a current mirror, and its collector current (which is input to the base of transistor 119) is not a replica, duplicate, reproduction, or mirror of its base current. Transistors 120 and 119 each have an amplification factor beta that is, at best, poorly controlled, causing an uncontrolled and unpredictable level of current amplification that varies across different circuits manufactured based on the same design and that also varies during operation of a single circuit. KCT, citing to Gilbert, has admitted that a "POSITA would understand that" the beta of transistors 119 and 120 has "limited configurability" and "is 'not very linear' and 'poorly-

[redacted]

controlled'." Amended Appendix B-03 to KCT's and Grand Chip's Disclosure of Amended Invalidity Contentions, dated January 29, 2025 at 38. Thus, a POSITA would have understood the opposite regarding transistors 119 and 120 of Ishimaru—that instead of being a circuit configured to mirror a current, which can be configured to achieve a target gain (as all parties agree is required for a current mirror), they provide some indeterminate, uncontrolled amount of gain.

138. ***Second***, Dr. Ricketts opines that "[a] POSITA further recognizes that the current source / current sink coupling of Ishimaru would be well suited for, and ready for improvement by, the use of additional current mirror structures to couple the two sides of Ishimaru's circuit to achieve the well-known benefits of such current mirrors." Ricketts Opening Report at ¶ 227. This reasoning is illogical. Ishimaru does not use a current mirror. But even assuming for the sake of argument that Ishimaru does use a current mirror, as Dr. Ricketts contends, then it should already have "achieve[d] the well-known benefits of such current mirrors" and there would be no reason to add "additional current mirror structures" that will require more space and cost.

139. ***Third***, Dr. Ricketts opines that "[a] POSITA would recognize modifying the speedup circuit as taught by Ishimaru to add a basic current mirror as taught by Harrison would be beneficial because it provides flexibility in allowing a broader range of voltages and a broader range of amplification." Ricketts Opening Report at ¶¶ 230-231. This is incorrect. The Ricketts Opening Report's figure illustrating the contended modifications is reproduced below. There are multiple reasons, which I will explain below, why a POSITA would not be motivated to make Dr. Ricketts' proposed modifications to Ishimaru.

[redacted]

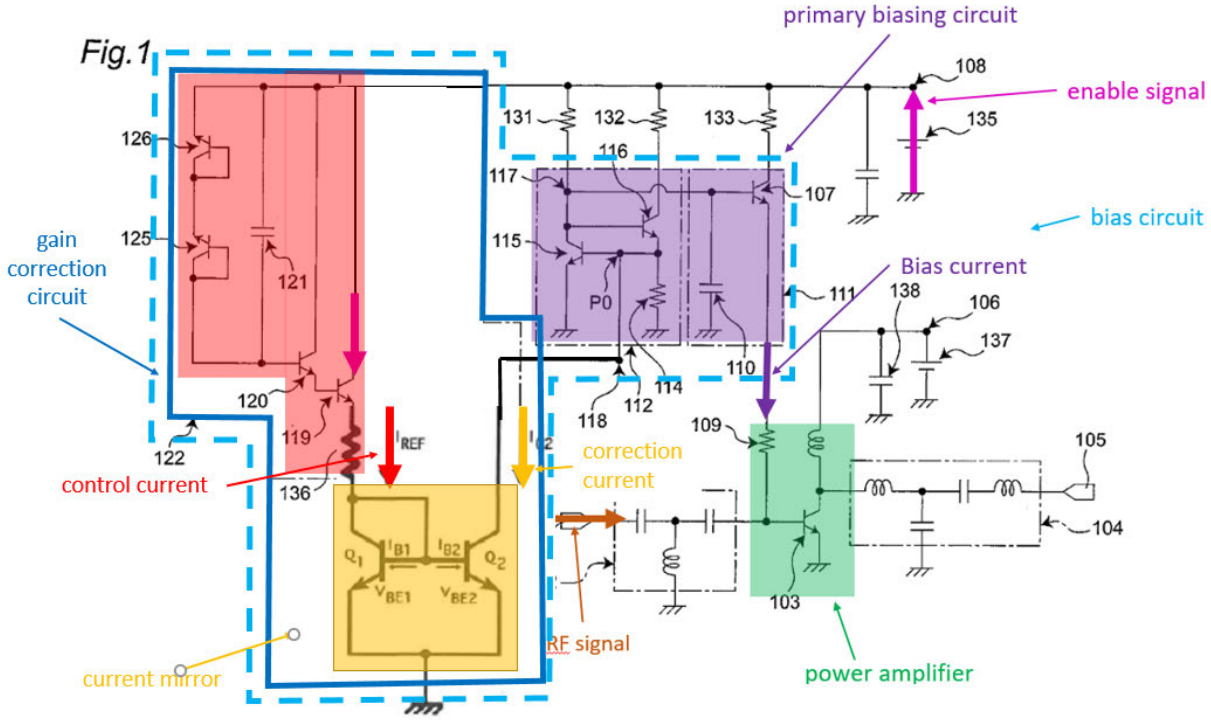

Ricketts Opening Report at ¶ 231.

140. Ishimaru's circuit already works for its intended purpose. In particular, Ishimaru discloses a working, functional speedup circuit 122 that increases a bias fed to amplifier transistor 103. Ishimaru at Abstract. Dr. Ricketts provides no reason that Ishimaru's speedup circuit 122, including its transistors 119 and 120, would benefit from "a broader range of voltages and a broader range of amplification" that adding a current mirror would purportedly provide. Instead, Ishimaru's circuit is already able to "suppress distortion" of an amplification signal without the drawbacks and problems of using a temperature sensor. *Id.* In fact, as I discuss below, one of the benefits of Ishimaru's circuit is that it is able to achieve its benefits without needing a specific level of amplification, so a POSITA would not have been motivated to adjust or tune that level of amplification, and thus would not be interested in a "broader range of amplification" as Dr. Ricketts contends, and thus would not modify Ishimaru's circuit as Dr. Ricketts proposes.

141. A current mirror is contrary to the purported technical solution and benefit as disclosed by Ishimaru. A current mirror provides a level of amplification that is controlled in order to achieve a target gain. By contrast, as I discuss above in Section XII.A.3, Ishimaru uses BJT transistors (like transistors 119 and 120) that provide an uncontrolled, unpredictable, and variable level of current amplification—the opposite of a controlled level of amplification, as provided by a current mirror. Ishimaru's use of an uncontrolled level of amplification is actually one of the advantages of Ishimaru's proposed solution, which improves upon power amplifier biasing techniques that instead used controlled amplification. In particular, Ishimaru describes the prior art as controlling the biasing of a power amplifier based on a sensed temperature. Ishimaru at ¶ 4 (describing U.S. Pat. No. 4,924,194 as disclosing "a circuit in which heat generation of an amplifier transistor is detected by a temperature sensing element (PIN diode) thermally coupled to the amplifier transistor and the detection result is reflected on a bias voltage of the amplifier transistor"). Ishimaru explains the drawbacks of using a temperature sensor to control the biasing of a power amplifier. Ishimaru at ¶ 5 ("close placement of the temperature sensing element and the amplifier transistor may cause an amplification signal to leak to the temperature sensing element, with a possibility of causing unexpected malfunction."). Instead of trying to control the bias current to achieve a specific level of amplification based on a sensed temperature, Ishimaru's proposed solution removes the temperature sensor, thus avoiding the drawbacks of having such a sensor, and no longer requires a specific level of amplification, instead using the uncontrolled level of amplification provided by transistors 119 and 120. Ishimaru at Abstract ("Accordingly, in the invention, it becomes possible to suppress distortion increases of an amplification signal due to heat generation at the start time ***without using any temperature sensing element***."), ¶¶ 7, 12, 24. As such, Ishimaru teaches away from using a

[redacted]

controlled, target level of amplification, such as that provided by a current mirror. A POSITA would not have been motivated to add a component having a controlled, target level of amplification, like a current mirror, to Ishimaru. More specifically, a POSITA would not have been motivated to modify or adjust the amplification provided by Ishimaru's transistors 119 and 120—an uncontrolled, variable level of amplification—by adding a current mirror—providing a controlled, target level of amplification.

142. The modification proposed by Dr. Ricketts would require at least two extra transistors (as depicted in Dr. Ricketts' figure above). In general, a POSITA would not have been motivated to add extra circuit components to Ishimaru's circuit because doing so increases costs, complexity, and size of the circuit. For the circuit in Ishimaru, which does not require the level of precise control of a current mirror, it is even more so since there is no alleged deficiency or issue with the circuit in Ishimaru.

143. ***Fourth***, Dr. Ricketts opines that "[m]odifying the teachings of Ishimaru with the basic current mirror taught by Harrison would involve no more than combining prior art elements according to known methods to yield predictable results" and that "[a]dding a current mirror simply uses a known technique to improve Ishimaru by scaling its currents between the two branches of its circuits in the same way." Ricketts Opening Report at ¶ 243; *see also id*. at ¶ 233 ("It is my opinion that a POSITA would have been highly motivated to combine Ishimaru's teaching of a bias circuit for a PA with Harrison's disclosure of a basic current mirror and have a reasonable expectation of success for at least the following reasons."). I disagree.

144. A POSITA would not have been motivated to add a current mirror to Ishimaru's circuit as proposed by Dr. Ricketts for the additional reason of insufficient voltage "headroom." Voltage headroom refers to the amount of voltage available between the highest voltage point

and ground, which in the case of Ishimaru is the voltage difference between the voltage on node 108 and the voltage of the ground. Each transistor in the circuit that is between the highest voltage point (the voltage at node 108) and the ground also needs a certain voltage difference across it, namely between its collector and emitter terminals ("V_{CE}"), and between its base and emitter terminals ("V_{BE}"), to operate as designed. In Ishimaru's circuit, the voltage drop across capacitor 121, the base-emitter voltage difference V_{BE} of transistor 120, V_{BE} of transistor 119, and the voltage drop across resistor 136 make up the total voltage difference between the node 108 and ground. A POSITA would not have been motivated to add transistor Q1 (of a current mirror) as Dr. Ricketts proposes because transistor Q1 also needs a certain voltage difference across it to operate as designed, but there may be insufficient voltage available to accommodate it, causing performance issues for all the transistors 119, 120, and Q1. *See, e.g.*, Gilbert (same textbook chapter as Ex. 1011 of the Ricketts Opening Report) at 274 (explaining when adding circuit components below a BJT's emitter should consider the headroom issue so that "where headroom considerations allow, it is usually preferable to use emitter degeneration to improve the ratio accuracy"). When there is a headroom voltage issue, the range of the affected transistor's output voltage may be clipped and the affected transistor's output current may be saturated. *See, e.g.,* Behzad Razavi, "Design of analog CMOS integrated circuits," (2nd edition) (hereinafter "Razavi") at 17 (explaining "a number of undesirable effects occur" with insufficient headroom voltage). This will in turn cause the affected transistor's output to be distorted, which is opposite to Ishimaru's design goal. *See, e.g.*, Ishimaru at Abstract ("Accordingly, in the invention, it becomes possible to suppress distortion increases of an amplification signal due to heat generation at the start time without using any temperature sensing element."). This will also reduce the "range of voltages" and "range of amplification" mentioned by the Ricketts Opening

Report, rather than broadening them as alleged. Dr. Ricketts does not address how a POSITA would successfully address headroom voltage issues created by his proposed modification to Ishimaru's circuit to ensure an operative circuit that achieves the desired purported improvements. As such it is unclear and unpredictable whether the modified circuit proposed by Dr. Ricketts would be operable or be able to achieve its intended purpose and design goals.

145. ***Fifth***, Dr. Ricketts opines that "Harrison's two-transistor current mirror would advantageously provide better isolation between the left side and the right side of Ishimaru's circuit." Ricketts Opening Report at ¶ 237. But Dr. Ricketts provides no reason why Ishimaru, a functional circuit that works for its intended purpose, would need or benefit from improved isolation. As such, a POSITA would not be motivated to add more circuitry, in the form of a current mirror, to Ishimaru's circuit to address a problem it does not have.

146. ***Sixth***, Dr. Ricketts opines that a POSITA would have been motivated to add a current mirror to Ishimaru's circuit, as depicted in his figure, to "improve" the coupling provided by Ishimaru's transistor 119 by "providing an additional stage of fine tuning the current amplification" "that had higher configurability of its mirror ratio." Ricketts Opening Report at ¶ 239; *see also id*. at ¶¶ 240-242.The Ricketts Opening Report's reasoning is incorrect. As I discuss earlier in this section and above in Section XII.A.3, Ishimaru uses BJT transistors (like transistors 119 and 120) that provide an uncontrolled, unpredictable, and variable level of current amplification when arranged as they are in Ishimaru, and that Ishimaru's use of an uncontrolled level of amplification is actually intrinsic to and one of the advantages of Ishimaru's proposed solution. By contrast, a POSITA would only have been motivated to "fine tune" a level of amplification when achieving a specific amplification level is important—the opposite of an uncontrolled, unpredictable, and variable level of amplification as taught by Ishimaru. In

addition, adding a current mirror to the output of Ishimaru's transistor 119 cannot undo or compensate for the uncontrolled amplification of transistors 119 and 120. The current output by the current mirror added in Dr. Ricketts modified circuit would continue to fluctuate uncontrollably, because it would be mirroring the uncontrolled current coming out of transistors 119 and 120. Thus, adding a current mirror to the output of transistor 119 will not allow for more precise or fine or granular tuning of the level of amplification provided, contrary to Dr. Ricketts' contentions. Therefore, a POSITA would not have been motivated to add a current mirror to Ishimaru's circuit and would not have had a reasonable expectation of success in doing so.

147. Dr. Ricketts further opines that the fine tuning allegedly provided by adding a current mirror to Ishimaru's circuit, as depicted in his figure, would allow Ishimaru's circuit to be "reused and adapted for different [power amplifier] PA applications and product lines," because "the gain variation in Ishimaru's Figure 2 is specific to a given [power amplifier] PA in a given layout, in a specific operating point and use case." Ricketts Opening Report at ¶ 240. However, Figure 2 depicts an "example" (Ishimaru at ¶ 53), and nothing in Ishimaru suggests that its circuit of Figure 1 is only applicable to and can only be used for the specific example depicted in Figure 2. More generally, there is no indication in Ishimaru that its circuit depicted in Figure 1 is narrowly tailored to and only suitable for a specific power amplifier, specific layout, specific operating point, and specific use case. Dr. Ricketts opines that "Ishimaru itself recognizes that temperature effects depend on the layout of the [power amplifier] PA and the amount of correction required varies across applications." Ricketts Opening Report at ¶ 241. I note however, that all the portions of Ishimaru cited by Dr. Ricketts relate to the level of amplification of the power amplifier, not the level of amplification of transistors 119 and/or 120, and thus are

irrelevant to whether a POSITA would be motivated to fine tune the amount of amplification provided by transistors 119 and/or 120.

148. ***Finally***, Dr. Ricketts opines that the "combined teachings of Ishimaru and Harrison is consistent with the disclosure of the Asserted Patents in that the term current mirror can include current amplification circuits formed from a plurality of current mirrors combined (e.g., cascaded) to achieve a target gain." Ricketts Opening Report at ¶ 244. Dr. Ricketts cites to the specification of the Asserted Patents to provide a motivation for his proposed modification to Ishimaru's circuit. As an initial matter, by citing to the Asserted Patent itself, Dr. Ricketts is unequivocally using improper hindsight bias, by alleging that the Asserted Patent itself is evidence of what was known before the Asserted Patent and using the Asserted Patent as a roadmap regarding how to modify Ishimaru. In addition, the cited portion discloses "a plurality of current mirrors combined (e.g., cascaded) to achieve a target gain," not tacking a current mirror onto a BJT (like Ishimaru's transistor 119) that provides uncontrolled, rather than target, gain, as Dr. Ricketts has proposed.

149. For at least the reasons above, a POSITA would not have been motivated to combine Ishimaru and Harrison to form the claimed combination of the asserted '563 patent claims.

E. Claims 14, 15, 17, and 20 Are Not Obvious over Ishimaru in View of Ichitsubo and Harrison

150. Ishimaru does not disclose the limitations of claims 14, 15, 17, and 20 as I explain above in Section XII.A, which is incorporated here by reference.

1. Ichitsubo does not disclose the limitations of claims 14, 15, 17, and 20

151. As I explain above in Section XII.B.1, which is incorporated here by reference, Ichitsubo does not disclose or teach the claim limitations missing from Ishimaru.

[redacted]

2. Harrison does not disclose the limitations of claims 14, 15, 17, and 20

152. As I explain above in Section XII.D.1, which is incorporated here by reference, Harrison does not disclose or teach the claim limitations missing from Ishimaru. Accordingly, because none of Ishimaru, Ichitsubo, or Harrison teaches any of the foregoing claim elements, these references, whether considered alone or in combination, fail to render obvious any of claims 14, 15, 17, or 20 of the ’563 patent.

3. A POSITA would not have been motivated to combine Ishimaru, Ichitsubo, and Harrison

153. As I explain above in Section XII.B.2, which is incorporated here by reference, a POSITA would not have been motivated to combine Ishimaru and Ichitsubo to form the claimed combination of the asserted ’563 patent claims. As I explain above in Section XII.D.2, which is incorporated here by reference, a POSITA would not have been motivated to combine Ishimaru and Harrison to form the claimed combination of the asserted ’563 patent claims. Therefore, because a POSITA would not have been motivated to combine Ishimaru and Ichitsubo, and also because a POSITA would not have been motivated to combine Ishimaru and Harrison, a POSITA also would not have been motivated to combine Ishimaru, Ichitsubo, and Harrison to form the claimed combination of the asserted ’563 patent claims.

F. Claims 14, 15, 17, and 20 Are Not Obvious over Ishimaru in View of Johnson and Harrison

154. Ishimaru does not disclose the limitations of claims 14, 15, 17, and 20 as I explain above in Section XII.A, which is incorporated here by reference.

1. Johnson does not disclose the limitations of claims 14, 15, 17, and 20

155. As I explain above in Section XII.C.1, which is incorporated here by reference, Johnson does not disclose or teach the claim limitations missing from Ishimaru.

2. Harrison does not disclose the limitations of claims 14, 15, 17, and 20

156. As I explain above in Section XII.D.1, which is incorporated here by reference, Harrison does not disclose or teach the claim limitations missing from Ishimaru. Accordingly, because none of Ishimaru, Johnson, or Harrison teaches any of the foregoing claim elements, these references, whether considered alone or in combination, fail to render obvious any of claims 14, 15, 17, or 20 of the '563 patent.

3. A POSITA would not have been motivated to combine Ishimaru, Johnson, and Harrison

157. As I explain above in Section XII.C.2, which is incorporated here by reference, a POSITA would not have been motivated to combine Ishimaru and Johnson to form the claimed combination of the asserted '563 patent claims. As I explain above in Section XII.D.2, which is incorporated here by reference, a POSITA would not have been motivated to combine Ishimaru and Harrison to form the claimed combination of the asserted '563 patent claims. Therefore, because a POSITA would not have been motivated to combine Ishimaru and Johnson, and also because a POSITA would not have been motivated to combine Ishimaru and Harrison, a POSITA also would not have been motivated to combine Ishimaru, Johnson, and Harrison to form the claimed combination of the asserted '563 patent claims.

XIII. VALIDITY OF THE '101 PATENT OVER THE PRIOR ART

A. Claims 1-2, 10-11, 17-18, and 21-22 Are Not Anticipated by Ishimaru

158. Dr. Ricketts opines that Ishimaru anticipates claims 1-2, 10-11, 17-18, and 21-22 of the '101 patent. Ricketts Opening Report at ¶¶ 257-312. I disagree. For the reasons set forth below and in Section XII.A for the '563 patent, Ishimaru does not disclose the following claim limitations from the asserted '101 patent claims.

1. Ishimaru does not disclose *"a time-dependent signal generator configured to shape an enable signal of the power amplifier to generate a control current"* (independent claims 1 and 21) and *"shaping an enable signal using a time-*

dependent signal generator to generate a control current" **(independent claim 17)**

159. Dr. Ricketts opines that Ishimaru discloses this limitation for the same reasons he argues for the '563 patent. Ricketts Opening Report at ¶¶ 262-264. For the reasons I discussed in Section XII.A for the '563 patent for the terms "enable signal of the power amplifier" and "control current," I disagree.

160. Dr. Ricketts incorrectly argues that "Ishimaru's control voltage is an enable signal of the power amplifier." Ricketts Opening Report at ¶ 262. As set forth in Section XII.A.2 for the '563 patent, Ishimaru's control voltage source 135 is not the claimed "enable signal of the power amplifier" of the '101 patent claims 1 and 21 or "enable signal" of claim 17 ("power amplifier enable signal" in claim 14 of the '563 patent). *See* Section XII.A.2.

161. Dr. Ricketts also incorrectly argues that a "current to the base of transistor 119" is the claimed "control current" from the asserted '101 patent claims. Ricketts Opening Report at ¶ 263. For the same reasons as set forth in Section XII.A.3 for the '563 patent, the base current to the transistor 119 is not the claimed "control current" of the '101 patent claims. *See* Section XII.A.3.

162. As such, Ishimaru does not disclose this limitation.

2. Ishimaru does not disclose "*a current amplifier configured to amplify the control current to generate a correction current*" (independent claims 1 and 21) and *"amplifying the control current using a current mirror of a current amplifier to generate a correction current"* (independent claim 17)

163. Dr. Ricketts opines that Ishimaru discloses this limitation for the same reasons he argues for the '563 patent. Ricketts Opening Report at ¶¶ 265-266. For the reasons I discussed in Section XII.A for the '563 patent for the term "control current," I disagree. At the least, Ishimaru does not disclose "*a current amplifier configured to amplify the control current to generate a correction current*" as recited in the '101 patent claims 1 and 21 and "amplifying the

control current using a current mirror of a current amplifier to generate a correction current" as recited in independent claim 17 because Ishimaru does not disclose the claimed "*control current*" for the reasons explained in Section XII.A.3 above. *See* Section XII.A.3.

3. Ishimaru does not disclose "*a primary biasing circuit [block] configured to generate a bias current for the power amplifier based at least partly on the correction current, the bias current configured to correct for a variation in gain of the power amplifier when the power amplifier is enabled"* (independent claims 1 and 21 (word in brackets is in claim 21)) and *"generating a bias current for a power amplifier using a primary biasing circuit, the primary biasing circuit configured to use the correction current to correct for a variation in gain of the power amplifier when the power amplifier is enabled"* (independent claim 17)

164. Dr. Ricketts opines that Ishimaru discloses this limitation for the same reasons he argues for the '563 patent. Ricketts Opening Report at ¶¶ 267-275. For the reasons I discussed in Section XII.A for the '563 patent, I disagree. At the least, Ishimaru does not disclose "*the bias current configured to correct for a variation in gain of the power amplifier when the power amplifier is enabled*" as recited in '101 patent claims 1 and 21 and "use the correction current to correct for a variation in gain of the power amplifier when the power amplifier is enabled" from '101 patent claim 17 because Ishimaru does not disclose a power amplifier enable signal. This limitation requires "*when the power amplifier is enabled,"* which is not simply supplying power to the power amplifier from a power source because that gives no meaning to the claimed term "enabled." Instead, the claim limitations require "when the power amplifier is enabled," which a POSITA would understand as a separate feature from being powered on by a power source as I explained in Section XII.A.2 for the term "power amplifier enable signal" of claim 14 of the '563 patent. That the limitation "when the power amplifier is enabled" refers to an enable signal is clear from the context of this limitation in claims 1, 17, and 21, which first requires "an enable signal of the power amplifier" (claims 1 and 21) or "enable signal" (claim 17), and then refers to "when the power amplifier is enabled." *See also* Section XII.A.2.

4. Ishimaru does not disclose "*the current amplifier including a current mirror*" (independent claims 1 and 21) and "using a current mirror of a current amplifier" (independent claim 17)

165. Dr. Ricketts opines that Ishimaru discloses this limitation for the same reasons he argues for the '563 patent. Ricketts Opening Report at ¶¶ 267-275. For the reasons I discussed in Section XII.A for the '563 patent for the term "current mirror," I disagree.

166. Ishimaru does not disclose "*the current amplifier including a current mirror*," as recited in claims 1 and 21 and "using a current mirror of a current amplifier," as recited in claim 17, because Ishimaru does not disclose the claimed "*current mirror*" for the reasons explained in Sections XII.A.3 and XII.A.5 above for the '563 patent. *See* Sections XII.A.3 and XII.A.5.

167. First, Ishimaru does not disclose a "current mirror" because Ishimaru does not mention a "current mirror" or a circuit configured to "mirror" anywhere. *See* Section XII.A.5.

168. Second, Ishimaru does not disclose a "current mirror" under Skyworks' proposed claim construction of the term ("one or more circuits configured to mirror a current, which can be configured to achieve a target gain, ***having at least two transistors with their base or gate terminals tied together***"). Post-Hearing Joint Claim Construction Chart at 2. Ishimaru's transistor 119 is a single transistor and is not "two transistors with their base or gate terminals tied together," thus it is not a current mirror under Skyworks' proposed claim construction. *See* Section XII.A.5.

169. Third, Ishimaru does not disclose a "current mirror" under both Skyworks' proposed construction ("one or more circuits configured to mirror a current, which can be configured to achieve a target gain, having at least two transistors with their base or gate terminals tied together") and Respondents' and Staff's proposed construction ("one or more circuits configured to mirror a current, which can be configured to achieve a target gain"). Post-Hearing Joint Claim Construction Chart at 2. Both constructions require "one or more circuits

configured to mirror a current." However, as I discuss above in Section XII.A.3, Ishimaru's transistor 119 is incapable of mirroring a current, and thus is not the claimed "current mirror." *See* Sections XII.A.3.

170. Fourth, under both Skyworks' proposed construction and Respondents' and Staff's proposed construction that require "one or more circuits . . . can be configured to achieve a ***target*** gain," Ishimaru does not disclose a current mirror. As I explained in Section XII.A.5, Ishimaru's transistor 119 cannot be configured to achieve a target gain as required by these proposed claim constructions. Section XII.A.5.

171. Fifth, as I explained in Section XII.A.3, during prosecution of the application for the '101 patent, the examiner reviewed and rejected the original independent claims of the '101 patent based on the reading that Alon's single transistor 204 "can be read as the claimed current amplifier," but allowed a dependent claim that recited "wherein amplifying the control current further includes amplifying the control current ***using a current mirror*** of the current amplifier." '101 File History, Application as Filed at 28 (Skyworks_ITC_000023158); Wentzloff Opening Report at ¶¶ 93-98. In other words, the Examiner allowed the '101 claims—with their "current mirror" limitation—over the same type of prior art disclosure and theory Dr. Ricketts relies on for his analysis. Further, as explained in Section XII.A.3, Ishimaru's Figure 1 and its disclosure (in the Wakita reference) was considered by the Examiner during the prosecution of the '563 patent, and the asserted claims including claim 17 of the '563 patent, which recites a "current mirror," were allowed over this disclosure. *See* Sections XII.A.3.

5. Ishimaru does not disclose claims 2, 10-11, 17-18, and 21-22.

172. Because Ishimaru does not disclose claim 1, as discussed above, Ishimaru does not disclose the limitations of dependent claims 2 and 10-11, at least based on their dependency on claim 1.

173. Claims 17 is an independent claim that requires "*shaping an enable signal using a time-dependent signal generator to generate a control current*," "*amplifying the control current using a current mirror of a current amplifier to generate a correction current*," and "*generating a bias current for a power amplifier using a primary biasing circuit, the primary biasing circuit configured to use the correction current to correct for a variation in gain of the power amplifier when the power amplifier is enabled*," among others. For the reasons I explained above for independent claims 1 and 21 of the '101 patent and Section XII.A for the '563 patent, Ishimaru does not disclose the limitations of claim 17.

174. Because Ishimaru does not disclose claim 17, as discussed above, Ishimaru does not disclose the limitations of dependent claim 18, at least based on its dependency on claim 17.

175. Claim 21 is an independent claim that requires "*a time-dependent signal generator configured to shape an enable signal of the power amplifier to generate a control current*," "*a current amplifier configured to amplify the control current to generate a correction current, the current amplifier including a current mirror*," and "*a primary biasing block configured to generate a bias current for the power amplifier based at least partly on the correction current, the bias current configured to correct for a variation in gain of the power amplifier when the power amplifier is enabled*," among others. For the reasons I explained above for claim 1 of the '101 patent and Section XII.A for the '563 patent, Ishimaru does not disclose claim 21.

176. Because Ishimaru does not disclose claim 21, as discussed above, Ishimaru does not disclose claim 22, at least based on its dependency on claim 21.

B. Claims 1-2, 10-11, 17-18 and 20-22 Are Not Obvious over Ishimaru in View of Harrison

177. Ishimaru does not disclose the limitations of claims 1-2, 10-11, 17-18, and 21-22 as set forth in Section XIII.A above, which is incorporated here by reference. Ishimaru does not disclose the limitations of claim 20 at least because it does not disclose "a heterojunction bipolar transistor (HBT)" and it does not disclose the limitations of claim 17, which claim 20 is a dependent claim of.

1. Harrison does not disclose the limitations of claims 1-2, 10-11, 17-18 and 20-22

178. Harrison does not disclose or teach the claim limitations missing from Ishimaru. Specifically, Harrison does not disclose or teach, and the Ricketts Opening Report does not allege that Harrison discloses or teaches, any of the following limitations:

- "[a] power amplifier system" (element [1.0] according to Ricketts Opening Report);
- "a power amplifier configured to amplify a radio frequency (RF) signal" (element [1.1] according to Ricketts Opening Report);
- "a bias block for biasing the power amplifier" (element [1.2] according to Ricketts Opening Report);
- "a time-dependent signal generator configured to shape an enable signal of the power amplifier to generate a control current" (element [1.2.1] according to Ricketts Opening Report);
- "a current amplifier configured to amplify the control current to generate a correction current" (element [1.2.2] according to Ricketts Opening Report);
- "a primary biasing circuit configured to generate a bias current for the power amplifier based at least partly on the correction current, the bias current configured to correct for a variation in gain of the power amplifier when the

power amplifier is enabled" (element [1.2.3] according to Ricketts Opening Report);

- "[a] method of biasing a power amplifier" (element [17.0] according to Ricketts Opening Report);
- "shaping an enable signal using a time-dependent signal generator to generate a control current" (element [17.1] according to Ricketts Opening Report);
- "generating a bias current for a power amplifier using a primary biasing circuit, the primary biasing circuit configured to use the correction current to correct for a variation in gain of the power amplifier when the power amplifier is enabled" (element [17.3] according to Ricketts Opening Report);
- "bias circuit for biasing a power amplifier" (element [21.0] according to Ricketts Opening Report);
- "a time-dependent signal generator configured to shape an enable signal of the power amplifier to generate a control current" (element [21.1] according to Ricketts Opening Report);
- "a primary biasing block configured to generate a bias current for the power amplifier based at least partly on the correction current, the bias current configured to correct for a variation in gain of the power amplifier when the power amplifier is enabled" (element [21.3] according to Ricketts Opening Report); and
- the limitations of dependent claims 2, 10-11, 18, 20 and 22.

See Ricketts Opening Report at ¶¶ 313-326. Accordingly, because neither Ishimaru nor Harrison teaches any of the foregoing claim elements, these references, whether considered alone or in combination, fail to render obvious any of claims 1-2, 10-11, 17-18 and 20-22 of the '101 patent.

179. In addition, Harrison does not disclose or teach "amplifying the control current using a current mirror of a current amplifier to generate a correction current" (element [17.2] according to Ricketts Opening Report); "a current amplifier configured to amplify the control current to generate a correction current, the current amplifier including a current mirror (element [21.2] according to Ricketts Opening Report) at least because it does not disclose or teach a "control current" or a "correction current". *Id.* at ¶¶ 319, 323.

2. A POSITA would not have been motivated to combine Ishimaru and Harrison

180. The Ricketts Opening Report fails to demonstrate that claims 1-2, 10-11, 17-18 and 20-22 of the '101 patent would have been obvious to a POSITA over Ishimaru in view of Harrison, including because it fails to demonstrate a motivation or reason for why a POSITA would have modified Ishimaru to include a current mirror in addition to the claimed components arranged in the claimed manner of the '101 patent. Indeed, what little reasoning the Ricketts Opening Report does offer with respect to the motivation of a POSITA is based on improper hindsight using the '101 patent as a roadmap, and is inconsistent with what a POSITA would have understood at the time of the priority date of the '101 patent.

181. Dr. Ricketts opines that "a POSITA would have been highly motivated to combine Ishimaru's teaching of a bias circuit for a PA with Harrison's disclosure of a basic current mirror and have a reasonable expectation of success for at least the reasons set out in §IX.D.2 ([1]) above." Ricketts Opening Report at ¶¶ 316, 319, 323. I disagree. For at least the same reasons discussed above in Section XII.D.2 in connection with the '563 patent, which is incorporated

here by reference, a POSITA would not have been motivated to combine Ishimaru and Harrison to form the claimed combination of the asserted ’101 patent claims.

C. Claim 20 Is Not Obvious over Ishimaru in View of the General Knowledge in the Art

182. Ishimaru does not disclose the limitations of claim 20 at least because it does not disclose “a heterojunction bipolar transistor (HBT)” and it does not disclose the limitations of claim 17, which claim 20 is a dependent claim of.

1. A POSITA would not have been motivated to combine Ishimaru and the knowledge in the art

183. The Ricketts Opening Report fails to demonstrate that claim 20 would have been obvious to a POSITA over Ishimaru in view of the knowledge in the art, including because it fails to demonstrate a motivation or reason for why a POSITA would have modified Ishimaru to use a HBT instead of a conventional BJT (a BJT can be an HBT, but a conventional BJT is not an HBT) for the claimed components arranged in the claimed manner. Indeed, what little reasoning the Ricketts Opening Report does offer with respect to the motivation of a POSITA is based on improper hindsight using the ’101 patent as a roadmap, and is inconsistent with what a POSITA would have understood at the time of the priority date of the ’101 patent.

184. Dr. Ricketts opines that “a POSITA would reasonably draw the inference that Ishimaru disclosed the use of its solution for the market leading forms of such BJTs, namely HBTs,” and that “Ishimaru is directed to an incremental improvement in the startup behavior of BJT-based RF PAs that is directed at the margin of high performing devices,” and that “[a] POSITA understood that HBTs, as BJTs, suffer the same thermal effects described by Ishimaru, and would likewise benefit in the same way as other BJTs.” Ricketts Opening Report at ¶¶ 329-332. I disagree for at least the reasons below.

185. A POSITA would have understood at the time of the priority date of the '101 patent that the temperature dependency of the gain of HBTs can be in the opposite direction of the temperature dependency of the gain of conventional BJTs (a BJT can be an HBT, but a conventional BJT is not an HBT). Conventional BJTs show current gain that increases with temperature, whereas HBTs show current gain that decreases with temperature. *See, e.g.*, S. Mohammadi and C. R. Selvakumar, Analysis of BJT's, pseudo-HBT's, and HBT's by including the effect of neutral base recombination, (IEEE Transactions on Electron Devices, vol. 41, no. 10, pp. 1708-1715, Oct. 1994) at 1708, 1711, Fig. 3 (showing that conventional BJT's current gain increases with temperature while HBT's current gain decreases with temperature). Thus, Dr. Rickett's statement that "[a] POSITA understood that HBTs, as BJTs, suffer the same thermal effects" is mistaken. Ricketts Opening Report at ¶ 331.

186. As a result, a POSITA would have understood that replacing BJTs in Ishimaru's circuit, without knowing the type of the BJTs (especially without knowing their temperature-dependent characteristic), with HBTs could render it inoperative because the designed mechanism to compensate for the "distortion increases of an amplification signal due to heat generation at the start time" could compensate in the wrong direction and thereby worsen the signal distortion. Ishimaru at Abstract.

187. Further, a POSITA would also have understood that replacing BJTs in Ishimaru's circuit, without knowing the type of the BJTs (especially without knowing their temperature-dependent characteristic), with HBTs is especially risky and unpredictable because Ishimaru's proposed solution removes the temperature sensor to avoid the drawbacks of having such a sensor. Ishimaru at Abstract ("Accordingly, in the invention, it becomes possible to suppress distortion increases of an amplification signal due to heat generation at the start time ***without***

using any temperature sensing element."), ¶¶ 7, 12, 24. As such, Ishimaru's solution is highly sensitive to the temperature-dependent characteristics of amplification devices it uses since it does not have a control loop based on temperature. Since conventional BJTs and HBTs have distinct temperature-dependent characteristics, a POSITA would not have had a reasonable expectation of success in replacing Ishimaru's BJTs with HBTs.

188. For at least the reasons discussed above, a POSITA would not have been motivated to combine Ishimaru and the knowledge in the art to replace Ishimaru's BJTs with HBTs.

D. Claim 20 Is Not Obvious over Ishimaru in View of Johnson

189. Ishimaru does not disclose the limitations of claim 20 at least because it does not disclose "a heterojunction bipolar transistor (HBT)" and it does not disclose the limitations of claim 17, which claim 20 is a dependent claim of.

1. Johnson does not disclose the limitations of claim 20

190. Johnson does not disclose or teach "[t]he method of claim 17 wherein generating the bias current includes shaping the bias current so as to compensate for a gain variation of a heterojunction bipolar transistor (HBT)" (claim 20) at least because it does not disclose or teach "shaping the bias current so as to compensate for a gain variation" and it does not disclose or teach the limitations of claim 17, which claim 20 is a dependent claim of. Ricketts Opening Report at ¶¶ 335-337. Accordingly, because neither Ishimaru nor Johnson teaches all elements of claim 20, these references whether considered alone or in combination fail to render obvious claim 20 of the '101 patent.

2. A POSITA would not have been motivated to combine Ishimaru and Johnson

191. The Ricketts Opening Report fails to demonstrate that claim 20 would have been obvious to a POSITA over Ishimaru in view of Johnson, including because it fails to demonstrate

a motivation or reason for why a POSITA would have modified Ishimaru to use an HBT instead of a conventional BJT (a BJT can be an HBT, but a conventional BJT is not an HBT) for the claimed components arranged in the claimed manner. Indeed, what little reasoning the Ricketts Opening Report does offer with respect to the motivation of a POSITA is based on improper hindsight using the '101 patent as a roadmap, and is inconsistent with what a POSITA would have understood at the time of the priority date of the '101 patent.

192. Dr. Ricketts opines that "[f]or the reasons discussed above in §IX.C.2 it is my opinion that a POSITA would have been motivated to modify Ishimaru with Johnson's teachings of an HBT for PA modules." Ricketts Opening Report at ¶ 338. I disagree. For at least the reasons discussed above in Section XIII.C.1, which is incorporated here by reference, a POSITA would not have been motivated to combine Ishimaru and Johnson to replace Ishimaru's BJTs with HBTs.

E. Claim 20 Is Not Obvious over Ishimaru in View of Harrison and Johnson

193. Ishimaru does not disclose the limitations of claim 20 at least because it does not disclose "a heterojunction bipolar transistor (HBT)" and it does not disclose the limitations of claim 17, which claim 20 is a dependent claim of.

1. Harrison does not disclose the limitations of claim 20

194. As I explain above in Section XIII.B.1, which is incorporated here by reference, Harrison does not disclose or teach the claim limitations missing from Ishimaru.

2. Johnson does not disclose the limitations of claim 20

195. As I explain above in Section XIII.D.1, which is incorporated here by reference, Johnson does not disclose or teach all elements of claim 20. Accordingly, because none of Ishimaru, Harrison, or Johnson teaches all elements of claim 20, these references whether considered alone or in combination fail to render obvious claim 20 of the '101 patent.

[redacted]

3. A POSITA would not have been motivated to combine Ishimaru, Harrison and Johnson

196. As I explain above in Section XIII.B.2, which is incorporated here by reference, a POSITA would not have been motivated to combine Ishimaru and Harrison to form the claimed combination of the asserted ’101 patent claims.

197. As I explain above in Section XIII.D.2, which is incorporated here by reference, a POSITA would not have been motivated to combine Ishimaru and Johnson to form the claimed combination of the asserted ’101 patent claims.

198. Therefore, because a POSITA would not have been motivated to combine Ishimaru and Harrison, and also because a POSITA would not have been motivated to combine Ishimaru and Johson, a POSITA also would not have been motivated to combine Ishimaru, Harrison, and Johnson to form the claimed combination of the asserted ’101 patent claims.

XIV. OBJECTIVE INDICIA OF NON-OBVIOUSNESS

A. Overview of Objective Indicia

199. As I explained above, it is my opinion that Dr. Ricketts has failed to meet his burden to prove by clear and convincing evidence that the ’563 and the ’101 patent claims are obvious. I understand that objective indicia of non-obviousness are not necessary when a Respondent has failed to prove by clear and convincing evidence that the patent claims are obvious. Nevertheless, based upon my analysis of the objective indicia of non-obviousness that are present in this case, these objective indicia further confirm that the Asserted Claims of the ’563 and ’101 patents are not obvious. Dr. Ricketts has not shown any evidence that overcomes the objective indicia of non-obviousness set forth below.

B. Long-Felt but Unresolved Need

[redacted]

200. There was a long-felt but unsolved need for the patented inventions of the ’101 and ’563 patents, specifically a need for improved power amplifier systems and power amplifier biasing. The ’101 and ’563 patents each expressly describe both this long-felt but unresolved need and the patented solution. *See, e.g.*, ’101 patent at 1:31-33; ’563 patent at 1:42-44. As the ’101 patent explains, for example, in a device “that communicates using a wireless local area network (WLAN) protocol” such as the 802.11 protocols used for Wi-Fi, “a power amplifier can be used to amplify the RF signal.” ’101 patent at 1:24-28. “It can be important to manage the amplification of a RF signal,” however, because “amplifying the RF signal to an incorrect power level can cause a wireless device to transmit out of band.” *Id.* at 1:28-30. This was particularly problematic for time division duplex (TDD) wireless protocols, like Wi-Fi, in which a transmitting device sends training data at the beginning of a transmission in order to train the receiving device how to demodulate the transmission in the correct manner. [redacted] In a TDD system like Wi-Fi, a device’s power amplifier will transition between enabled and disabled states (*see* ’101 patent at 4:15-18, 5:30-34, 8:17-20, 9:23-28) which affect the power amplifier’s gain and thus whether the device is transmitting “out of band.” When the power amplifier transitions from disabled to enabled, for example, its gain can vary during the transient startup time period required for the power amplifier to reach stable operation. *Id.* at 1:46-48, 3:14-15, 4:28-35, 8:43-49, 9:56-64; [redacted]. If a power amplifier’s gain is allowed to vary while training data is being transmitted, this gain variation can impair or inhibit the ability to accurately demodulate the transmission. *See* ’101 patent at 4:28-42, 9:56-64, 12:48-67, and Figs. 7A, 7B; [redacted]. Accordingly, as the patents explain, there was a long-felt “need for improved power

amplifier systems" and in particular "for improving power amplifier biasing." '101 patent at 1:1-33; '563 patent at 1:42-44.

201. This was problematic, for example, in the Wi-Fi industry because Wi-Fi uses bits early in the transmission protocol to properly interpret data that follows. In addition, Wi-Fi radios are used in energy-constrained applications, where power consumption must be tightly controlled. For this reason, it is important to quickly enable a Wi-Fi power amplifier to transmit a packet, and then quickly disable it, saving power. The Wi-Fi standard has also evolved to require higher-order modulation, which in turn requires higher linearity from the power amplifier. Therefore, not only do Wi-Fi power amplifiers need to be enabled quickly, they also need to be more stable.

202. Accordingly, a power amplifier that could control distortion at the beginning of a data burst was thus important to enabling the accurate transmission and reception of data over Wi-Fi systems. Because no other FEM manufacturer had been able to design and bring to market a commercially acceptable power amplifier that was capable of reducing distortion shortly after when the power amplifier transitions from its disabled state to its enabled state there was a long-felt but unresolved need in the industry for a power amplifier that was capable of controlling distortion at the beginning of a data burst.

203. The inventions in the '101 and '563 patents solved this problem through their novel claimed systems and methods for generating a bias current configured to correct for a

variation in gain of a power amplifier when the power amplifier is enabled. *See, e.g.*, '101 patent at Abstract, 1:46-48, 3:1-4, 3:14-15, 4:28-42, 8:46-49, 9:43-46, 9:53-64, 13:30-37, and Figs. 5, 7A, 7B, and 8. As the '101 patent explains, for example:

> The correction current $I_{CORRECTION}$ can be used by the primary biasing circuit 74 to correct for a variation in gain over time that can occur shortly after the power amplifier 32 is enabled. For example, shortly after the power amplifier 32 is enabled, absent compensation the current of the primary biasing circuit 74 can come up slow due to thermal effects, and the gain of the power amplifier 32 can be low. By using the time-dependent signal generator 72 and the current amplifier 73 to provide a transient current boost to the power amplifier 32 after being enabled, the power amplifier 32 can be configured to have a substantially constant gain over time.

'101 patent at 9:54-64. As a result, because the claimed systems and methods result in a power amplifier having "substantially constant" (or flat) gain over time, the patented invention solved the long-felt need for a power amplifier capable of controlling distortion during the critical training period at the beginning of a data burst. *Id.*;

204. The Ricketts Opening Report contends that "the problem identified by the '101/'563 patents (PA lag at start-up) was known before the '101/'563 patents, as were various solutions." Ricketts Opening Report at ¶ 366. Although I agree that there was a long-felt need in the industry for the '101 and '563 patents' claimed inventions, I disagree with Dr. Ricketts both with respect to his oversimplification of the '101 and '563 patented solution as merely addressing "PA lag" and with respect to his contention that there "were various solutions" before the priority dates of the '101 and '563 patents. As an initial matter, for the reasons described above and in my opening report, the '101 and '563 patents do not merely address "PA lag"—a term Dr. Ricketts coined that I note appears nowhere in the '101 or '563 patents themselves. To the contrary, these patents address a specific long-felt need in the Wi-Fi industry for a power

amplifier capable of generating a constant gain during the key period when transitioning from a disabled state to an enabled state—including during the period when, as described above, training data required to accurately demodulate a transmission is transmitted—and thereby control distortion at the beginning of a data burst. As the first named inventor on the ’101 and ’563 patents, Dr. Ping Li, confirmed, no one solved the specific problem addressed by his patents before Skyworks did.

205. Moreover, none of the references Dr. Ricketts cites (Ricketts Opening Report at ¶¶ 366-376) demonstrate a solution to the long-felt need in this industry that the ’101 and ’563 patents were the first to address. To the contrary, these references—two papers by S. Yoon et al. (“Yoon Papers”) and U.S. Patent No. 8,260,224 (the “’224 patent”)—are either unrelated to the long-felt need addressed by the ’101 and ’563 patents or confirm that this long-felt need was unmet. At most, these references show that others had tried and failed to provide a solution to the power amplifier distortion problem, offering approaches that either failed to address the same problem as the inventions claimed the ’101 and ’563 patents or failed to solve it.

206. The Yoon Papers, for example, are addressed to a different problem and different solution than the inventions claimed in the ’101 and ’563 patent. In particular, these papers are directed to a “temperature compensation technique” for a specific “two-stage power amplifier (PA),” and using specific “InGaP/GaAs HBT” manufacturing processes to impart specific “thermal characteristics” to components of this amplifier. *See* 2009 Yoon Paper at Abstract, 601-02; 2007 Yoon Paper at 643. Although the Yoon Papers refer to thermal capacitance and thermal resistance, and “model” these thermal characteristics as electrical circuits, the Yoon Papers do not address the same problem of biasing a power amplifier in the manner described and claimed

in the ’101 and ’563 patents to solve the problem of controlling distortion at the beginning of a data burst. At most, the Yoon Papers merely acknowledge that power amplifier distortion at startup is a long-felt problem (*see, e.g.*, 2007 Yoon Paper at 646), without offering any form of biasing current solution.

207. The ’224 patent, if anything, refutes Dr. Ricketts argument. For example, in the passage that Dr. Ricketts cites, the ’224 patent describes a need to generate “an output signal that is not distorted by unwanted gain and phase variations” (’224 patent, 2:12-13), but the ’224 patent states that the prevailing solution to this problem was that “a PA is generally not used unless it is thermally stable.” ’224 patent at 2:14. In other words, in the passage that Dr. Ricketts relies upon, the ’224 patent does not propose biasing a power amplifier in the manner described and claimed in the ’101 and ’563 patents to solve the problem of controlling distortion at the beginning of a data burst. Instead, the ’224 patent teaches “simply to wait until a PA is thermally stable before using it to amplify the signal.” *Id.* at 2:16-17. This is not a solution to the problem, and would not be workable in a TDD system like Wi-Fi where speed and accuracy in the transmission of data are paramount considerations. Indeed, were the ’224 patent’s “simply wait” approach taken, the resulting delay would be experienced by Wi-Fi users as glitchy and degraded data transmission performance that would be commercially unacceptable in today’s era of live-streaming video, web-based videoconferencing, remote gaming, and other near-instantaneous Wi-Fi applications. Moreover, the ’224 patent specifically acknowledges that (before the ’101 and ’563 patents) prior attempts to address power amplifier performance using “an external resistor and speed-up capacitor” (*id.* at 2:17-20) failed to address these problems. Confirming the failure of such prior attempts, the ’224 patent states that when using prior art techniques “the beginning of the RF signal data ***will suffer*** from some amount of dynamic EVM and the

additional current may ***not be sufficient*** to bring the PA into a thermally stable state at a desired rate." *Id.* at 2:23-26. Thus, far from supporting Dr. Ricketts' argument, the '224 patent confirms that before the '101 and '563 patents there was a long-felt need in this industry that others had tried and failed to solve.

208. Unlike the Yoon Papers and '224 patent, the '101 and '563 patents address the distortion problem, including at the beginning of transmission.[5] The '101 and '563 patents were able to resolve this distortion issue, for example, by adding a time-dependent signal generator ('101 patent) or gain correction circuit ('563 patent) and a current mirror or circuit configured to mirror to alter the bias current at the beginning of a data transmission, thus correcting for a variation in gain of the power amplifier when the power amplifier was enabled. *See* '101 patent at 1:49-59; '563 patent at 1:61-2:4. The solution provided by the '101 and '563 patents resolved the long-felt but previously unsolved need for a power amplifier that was capable of controlling distortion at the beginning of a data transmission.

209. Accordingly, contrary to Dr. Ricketts' argument, the '101 and '563 patents' solution to the long-felt but previously unsolved need in this industry to control distortion at the

[5] Notably, not even Dr. Ricketts contends that the Yoon Papers or '224 patent invalidate any Asserted Claim of the '101 or '563 patents.

beginning of a data burst is objective evidence of the non-obviousness of the asserted ’101 and ’563 patent claims.

C. Failure of Others

210. Skyworks was the first FEM manufacturer to invent and implement the inventions claimed in the ’101 and ’563 patents, which successfully addressed the need for a power amplifier that could control data distortion at the start of transmission. The circuit that Skyworks invented reduced the dynamic distortion of a power amplifier, and Skyworks was able to design products that implemented this solution. None of the companies that designed, manufactured, and sold Wi-Fi FEMs before the priority date of the ’101 and ’563 patents were able to produce a power amplifier capable of controlling data distortion at the start of transmission in the same way that the ’101 and ’563 patents claim. Dr. Ricketts cites no evidence of any Wi-Fi FEM manufacturer that had incorporated this solution into its products before the priority date of the ’101 and ’563 patents. Indeed, as discussed in paragraph 207 of Section XIV.B above, the ’224 patent cited by Dr. Ricketts confirms that prior attempts failed to address this problem. *See* ’224 patent at 2:23-26 (“the beginning of the RF signal data ***will suffer*** from some amount of dynamic EVM and the additional current may ***not be sufficient*** to bring the PA into a thermally stable state at a desired rate”).

211. Dr. Ricketts argues that the “evidence does not indicate that others tried, and failed at either implementing the claimed inventions of the ’101 and ’563 Patents, or more generally, solving the PA start-up lag issue.” Rickets Report at ¶ 378. I disagree. As an initial matter, Dr. Ricketts is again wrong to oversimplify the ’101 and ’563 patents as merely addressing a “PA start-up lag issue” for the reasons I have discussed above. Moreover, as also shown above, Dr. Ricketts’ own ’224 patent confirms that prior attempts failed to address this problem. *See* ’224 patent at 2:23-26 (“the beginning of the RF signal data ***will suffer*** from some

amount of dynamic EVM and the additional current may ***not be sufficient*** to bring the PA into a thermally stable state at a desired rate"). Finally, Skyworks has been widely recognized as an industry leader because of its investment in pioneering innovations like the inventions claimed in the '101 and '563 patents. *See, e.g.,* Skyworks_ITC_000018682-701 ("Skyworks has emerged as the leader in the RF chip space.").

212. For each of these reasons, contrary to Dr. Ricketts' argument, the failure of others in this industry to solve the problem of controlling distortion at the beginning of a data burst is objective evidence of the non-obviousness of the Asserted Claims of the '101 and '563 patents.

D. Unexpected Results and Teaching Away

213. The solution provided in the '101 and '563 patents for a power amplifier that could control distortion at the beginning of a data burst was an unexpected result because it was counterintuitive to the prevailing teachings of the time. At the time of the '101 and '563 patents it was generally known that in some situations the power amplifier's gain needed to be reduced for two reasons: (1) the "relatively noisy environment" that the power amplifier needed to operate in; and (2) the power amplifier and the bias block being "exposed to a thermal gradient" and thus being "at different operating temperatures." *See, e.g.*, '101 patent at 9:29-46. The '101 and '563 patents solved this problem and stabilized the power amplifier gain, in part, by adding a time-dependent signal generator ('101 patent) or gain correction circuit ('563 patent), and a current mirror or circuit configured to mirror to correct the bias current at the beginning of a data transmission.

214. Skyworks' solution to the distortion problem and the results that this solution produced were unexpected because Skyworks' solution was counterintuitive to the prevailing teachings at the time. For example, as discussed in paragraph 207 above, the '224 patent cited by Dr. Ricketts confirms that the prevailing wisdom before the '101 and '563 patents was that

one either needed to suffer the delay and performance degradation of having to "wait until a PA is thermally stable before using it to amplify" or else "the beginning of the RF signal data ***will suffer*** from some amount dynamic EVM[.]" '224 patent at 2:12-17, 23-26. Contrary to that prevailing wisdom, the '101 and '563 patents demonstrated "that the EVM of the power amplifier system can be improved by including the time-dependent signal generator and the current amplifier" as claimed in the Asserted Claims. *See* '101 patent at12:64-67; *see also id*. at 4:35-42, 8:36-49, 12:48-67 and Figs. 7A, 7B.

215. Similarly, before the '101 and '563 patents, one of the goals of power amplifier design was to increase their efficiency. The prevailing approach at the time was to maintain a constant bias current to increase the efficiency of power amplifiers. *See, e.g.*, Skyworks_ITC_000110940- 946 (Application Note from RFMD, Predecessor of Qorvo) ("RFMD"). A POSITA would have expected that keeping the bias current supplied to the power amplifier constant would achieve a flatter gain. Skyworks_ITC_000110940- 946 ("In order to obtain stable bias current and consistent RF performance using gain block amplifiers, RFMD recommends that customers normally use a dropping resistor in series with the power supply voltage so that a minimum 2 Volt drop is maintained across it.").

216. Skyworks' innovation was the opposite to the prevailing teaching and produced unexpected results. Instead of keeping the bias current stable, the '101 and '563 patents teach that changing the bias current in a time-dependent manner at the beginning of a data transmission results in a flatter gain response over time from the beginning of the data transmission. *See* '101 patent at 4:35-42 (describing "substantially flat gain response versus time"), 9:60-64 (describing "substantially constant gain over time"). The inventions claimed in the '101 and '563 patents achieved results that a POSITA would not have expected because a flatter gain response was

achieved by changing the bias current in a time-dependent manner, instead of maintaining a constant bias current. This was unexpected because the then-prevailing expectation would have been that achieving a flatter gain could only be attained by fixed bias conditions, as confirmed in RFMD. Skyworks was able to achieve a better performing solution than the teachings at that time (as confirmed by RFMD) would have led a POSITA to expect, thus demonstrating unexpected results.

217. Dr. Ricketts argues that RFMD does "not 'teach away' from the claimed inventions of the '101 and '563 Patents" nor does it "indicate that the results were unexpected." Ricketts Opening Report at ¶ 379. I disagree for the reasons discussed above. Moreover, the discussion of RFMD in Dr. Ricketts' Opening Report ignores the fact that, in order to achieve a steady state, a power amplifier used for transmission must first go through a startup phase. It is during this transient startup phase where the '101 and '563 patents achieve their unexpected results. Contrary to Dr. Ricketts' suggestion, nothing in the RFMD reference limits its teachings to only the steady state. Rather, the teaching of the RFMD reference reflects conventional wisdom as to keeping a constant bias current.

218. The Ishimaru reference that Dr. Ricketts cites also teaches away from the claimed '101 and '563 invention for the reasons that I explained in Sections XII and XIII, including because it does not teach a current mirror. My reasoning in Sections XII and XIII is incorporated by reference as though fully set forth here. Briefly, Ishimaru's transistor 119 is not a current mirror (or is not configured to mirror) because it is a single BJT with a gain factor (beta) that varies based on manufacturing and operating conditions and thus is not able to "mirror" a current. Ishimaru achieves its goal of (an unspecified level of) amplification with the transistor 119. Ishimaru further removes the ability to control the gain by removing the temperature

[redacted]

sensor. In doing so, Ishimaru teaches away from using a controlled, target level of amplification, such as that provided by a current mirror. *See* Sections XII and XIII.

219. In addition, the claimed inventions of the ’101 and ’563 patents also improved power amplifiers by using a separate enable signal from a baseband processor to control the bias block of the power amplifier. As I explained in Section XII.A.2, the separate enable signal allows for efficient control of the power amplifier by the baseband processor, especially for complex systems with multiple power amplifiers for different wireless communications, such as Wi-Fi, WLAN, GSM, CDMA, W-CDMA, LTE, or EDGE. ’101 patent at 5:29-40, 9:23-28 (“the enable signal ENABLE can be ***selectively controlled*** so as to pulse the output of the power amplifier”), 7:8-9 (“[t]he power amplifier bias block 30 can receive an enable signal ENABLE from the baseband processor 34…”), Fig. 3A (depicting power amplifier bias block 30 receiving an enable signal ENABLE from baseband processor 34). Each power amplifier needs to be able to switch between a transmitting and non-transmitting state quickly using an enable signal, so that the other power amplifiers in the same system would not accidentally be enabled at the same time and inadvertently transmit unwanted signals, thereby degrading performance.

220. This was counterintuitive to the prevailing teachings of the time. RF power amplifiers from many other companies at the time did not have a separate enable signal. As shown below, SST11CP16 (5.1-5-9 GHz High-Linearity Power Amplifier) from Silicon Storage Technology (now Microchip) from 2013 did not have an enable signal separate from a power source.

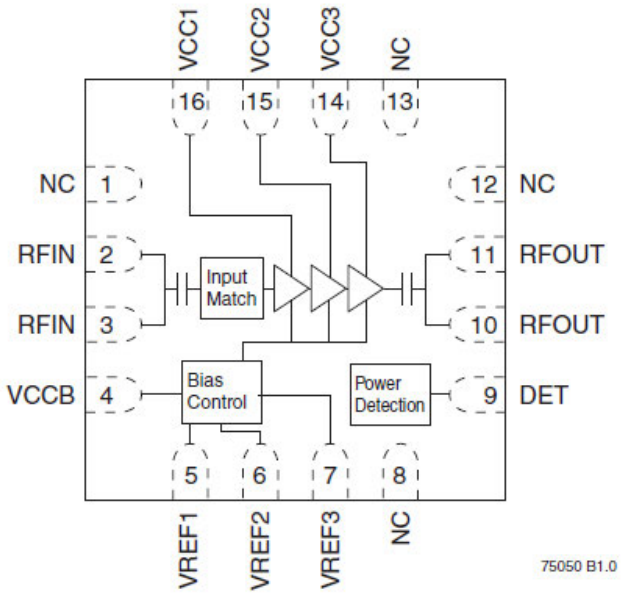

SST11CP16 Datasheet at 3. As shown below, RF5632 (Single 5.0V, 2.3 TO 2.7 GHz Linear Power Amplifier) from RFMD (now Qorvo) from 2012 also did not have an enable signal separate from a power source.

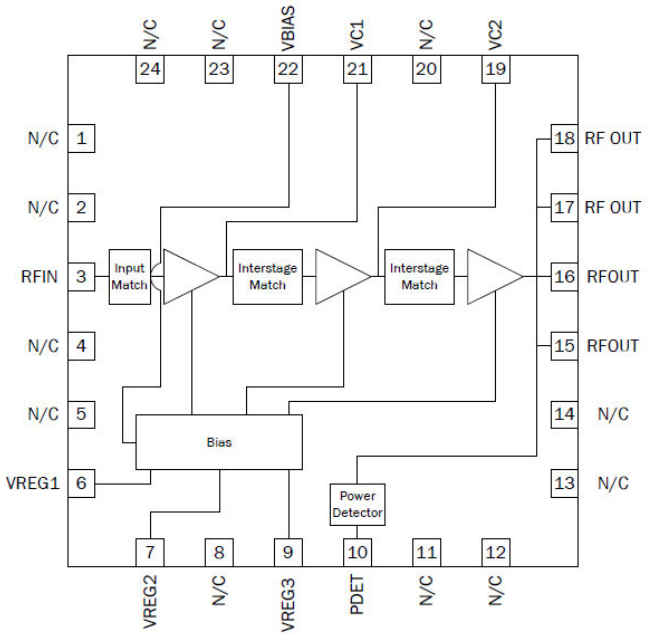

RF5632 Datasheet at 1. These references further confirm that the conventional wisdom at the time of the claimed ’101 and ’563 inventions taught away from the claimed inventions.

221. For each of these reasons, contrary to Dr. Ricketts' argument, the prior art's teaching away from the '101 and '563 patents' solution to the problem of controlling distortion at the beginning of a data burst, as well as the unexpected results that the patented solution achieved, are objective evidence of the non-obviousness of the Asserted Claims of the '101 and '563 patents.

E. Praise by Others

222. The Ricketts Opening Report contends that Skyworks' evidence of praise by others does not contain "any specific reference to the claimed inventions of the '101 and '563 Patents." Ricketts Opening Report at ¶ 382. It is not unusual for an industry to praise the innovations of a company by praising the products produced by that company instead of specifically pointing to the claimed inventions of a specific enumerated patent. There is ample evidence that Skyworks' products were widely praised for their innovation, and that innovation was the result of the inventions claimed by the '101 and '563 patents.

223. Skyworks' domestic industry products have received significant praise in the Wi-Fi industry for their improved performance, high linearity output power, and power efficiency—qualities that the innovations claimed in the '101 and '563 patents provide. For example, in February 2021, the industry trade journal Electronics360 praised the "SKY85784-11" as featuring an "extremely low error vector magnitude EVM floor" while "simultaneously providing ultra-high linear output power" which "improv[es] overall range coverage" and makes it "ideal" for Wi-Fi applications "including indoor and outdoor networking, and wireless video streaming." *See* Skyworks_ITC_000110938-39. This same article heaped similar praise on the "SKY85780-11." *Id.* In addition, in February 2020, Electronics 360 praised the SKY85747-11 as featuring a "very low EVM floor" and "extremely high linear output power," which the article states "improv[es] coverage range" including for "devices such as networking and WLAN-

enabled wireless video streaming systems." *See* Skyworks_ITC_000110947-938. In yet another example, citing "Skyworks' SKY85780-11 and SKY85784-11," industry-leading Wi-Fi equipment manufactures like ASUS have praised the "improved power efficiency" and "high-performance" of Skyworks' patented FEM products as delivering "the maximum-allowed performance" with "low power consumption and improved thermal management" and "enabling faster download and upload speeds" with "highly reliable connectivity" and "improved power efficiency." *See* Skyworks_ITC-000110502-04. This same publication describes ASUS as "leverage[ing] Skyworks' latest 6 GHz front-end modules to maximize RF performance in signal coverage, quality, and power efficiency." *Id.* at Skyworks_ITC-000110502. Indeed, ASUS's Corporate Vice President, Ten-Long Deng, was quoted as stating: "Leveraging Skyworks' vast experience developing cutting-edge technologies has enabled us to bring true multi-gigabit performance to life for those looking to gain an advantage while upgrading their gaming experiences with the new ASUS ROG Rapture GT-ADE11000." *Id.* at Skyworks_ITC-000110503. All these products practice the claimed inventions of the '101 and '563 patents. Moreover, the attributes of Skyworks patented products praised by each of these publications are the same attributes that Dr. Li confirmed his '101 and '563 inventions provide.

224. The performance of these products and the resulting praise by others was a direct result of the ’101 and ’563 patented inventions, including because these inventions enable the products’ superior dynamic error vector magnitude (EVM) performance. *See, e.g.*, ’101 patent at 4:39-42 (“Correcting for gain variation in the power amplifier can improve the power amplifier's performance, including, for example, the power amplifier's dynamic error vector magnitude (EVM).”), 8:46-49, 12:48-67, Figs. 7A-7B;

225. For each of these reasons, contrary to Dr. Ricketts’ argument, industry praise for the ’101 and ’563 patents’ solution to the problem of controlling distortion at the beginning of a data burst is objective evidence of the non-obviousness of the Asserted Claims of the ’101 and ’563 patents.

F. Commercial Success

226. Skyworks has experienced considerable commercial success as a result of the innovations of the ’101 and ’563 patents. Skyworks’ products, including the domestic industry

products, embody the ’101 and ’563 patents.

227. Citing no evidence, Dr. Ricketts’ Opening Report contends that “the overall sales of the FEMs that purportedly practice the ’101 and ’563 Patents are not … attributable to the claimed inventions of the ’101 and ’563 Patents.” Ricketts Opening Report at ¶ 385. Also citing no evidence, Dr. Ricketts’ Opening Report speculates that Skyworks’ overall revenue and market share “could just as easily be attributed to Skyworks’ established market position and visibility in the market as it could to the claimed inventions of the ’101 and ’563 Patents.” Ricketts Opening Report at ¶ 386. Because Dr. Ricketts cites no evidence, however, these opinions are mere conclusory speculation. Skyworks, on the other hand, has produced ample evidence demonstrating that the commercial success of its Domestic Industry products is due to the innovations of the ’101 and ’563 patents.

228. As an initial matter, a direct nexus exists between the patented inventions of the ’101 and ’563 patents as embodied in Skyworks’ products and Skyworks’ commercial success, including for many of the same reasons discussed in Section XIV.E (Praise) above. For example, Skyworks’ core products are radio frequency components, including front-end modules which contain power amplifier chips. The industry-leading performance of Skyworks’ products is achieved by improvements in the functionality and performance of power amplifiers such as the inventions claimed in the ’101 and ’563 patents. For the same reasons demonstrated in Section XIV.E above, these improvements in power amplifiers make Skyworks’ products more desirable and thus more commercially successful.

Indeed, Dr. Li, the first named inventor on the ’101 and ’563 patents, confirmed that his patented “invention enables power savings, while at the same time improving transmission performance and accuracy”—the very same attributes that Skyworks’ customers praise. *Compare* Li Tr. at 181:22-182:3 *with* Skyworks_ITC-000110502-04 (customer praise from ASUS). There is thus a direct nexus between the claimed inventions of the ’101 and ’563 patents and the commercial success of Skyworks’ practicing products.

229. Moreover, Skyworks has sold more than 1.3 billion units of products that implement the inventions of the ’101 and ’563 patents. *See* Skyworks_ITC_000011177 (showing sales of the products that incorporate the claimed inventions of the ’101 and ’563 patents); . The patented features have been commercially successful, as evidenced by Skyworks’ high volume of sales of products that depend on the patented invention.

230. For each of these reasons, contrary to Dr. Ricketts’ argument, the commercial success of Skyworks products that practice the claimed inventions of the ’101 and ’563 patents is objective evidence of the non-obviousness of the Asserted Claims of the ’101 and ’563 patents.

G. Copying

[redacted]

[redacted]

[redacted]

[redacted]

[redacted]

[redacted]

[redacted]

[redacted]

[redacted]

[redacted]

[redacted]

[redacted]

[redacted]

[redacted]

[redacted]

[redacted]

[redacted]

[redacted]

[redacted]

[redacted]

[redacted]

[redacted]

[redacted]

[redacted]

[redacted]

[redacted]

[redacted]

[redacted]

[redacted]

[redacted]

[redacted]

[redacted]

[redacted]

[redacted]

[redacted]

[redacted]

[redacted]

[redacted]

[redacted]

[redacted]

[redacted]

[redacted]

[redacted]

[redacted]

[redacted]

[redacted]

[redacted]

[redacted]

[redacted]

[redacted]

[redacted]

[redacted]

[redacted]

[redacted]

[redacted]

[redacted]

[redacted]

[redacted]

[redacted]

[redacted]

[redacted]

XV. THE ’101 AND ’563 PATENTS SATISFY THE ENABLEMENT AND WRITTEN DESCRIPTION REQUIREMENTS

A. The Specification of the ’101 and ’563 Patents Satisfies the Enablement Requirement

243. Dr. Ricketts opines that the claim elements that recite biasing a power amplifier with a bias current/bias signal generated by a primary biasing circuit in the ’101 and ’563 patents are not enabled. Ricketts Opening Report at ¶¶ 395-426. Those elements appear in the following limitations recited in the patents’ independent claims:

- “bias circuit configured to . . . generate a bias signal that biases the power amplifier” [and having] “a primary bias circuit configured to generate the bias signal [that biases the power amplifier].” (’563 patent, claim 14)
- “a bias block for biasing the power amplifier, the bias block including . . . a primary biasing circuit configured to generate a bias current for the power amplifier.” (’101 patent, claim 1)
- “A method of biasing a power amplifier, the method comprising: . . . generating a bias current for a power amplifier using a primary biasing circuit.” (’101 patent, claim 17)
- “A bias circuit for biasing a power amplifier, the bias circuit comprising: . . . a primary biasing block configured to generate a bias current for the power amplifier.” (’101 patent, claim 21)

Ricketts Opening Report at ¶ 398. I disagree.

244. As a preliminary matter, Dr. Ricketts appears to apply an incorrect legal standard. I have been informed and understand that the correct legal standard for determining whether a claim is enabled is whether the patent specification provides a sufficient description of the claimed invention to enable a POSITA to make and use the claimed invention without undue experimentation. By contrast, the opinion that Dr. Ricketts appears to express in the Ricketts Opening Report is that the specification of the '101 and '563 patents would not enable the claimed invention ***if*** the claims cover Skyworks' domestic industry products. Dr. Ricketts does not opine that the specifications of the '101 and '563 patents fail to enable the scope of the claims as written. Ricketts Opening Report at ¶¶ 395-426. Nor does Dr. Ricketts demonstrate by clear and convincing evidence that a POSITA would not be able to practice the claims as written without undue experimentation.

245. Moreover, the asserted claims of the '101 and '563 patent are enabled by their specification's disclosure, which describes the claimed invention in such clear and readily understood terms that a POSITA would have readily been able to make and use the claimed inventions without undue experimentation. Figures 4 and 5, for example, show "a schematic block diagram of ***one example*** of a power amplifier system ***including a power amplifier bias block according to one embodiment***" and "a circuit diagram of ***a power amplifier bias block according to one embodiment***." '101 patent at 3:51-55 (emphases added). Figure 4, reproduced below, shows ***a power amplifier bias block 50*** generating a bias current, I_{BIAS}, for a power amplifier 32. *Id.* at Fig. 4; *see also id.* at 8:64-9:22.

[redacted]

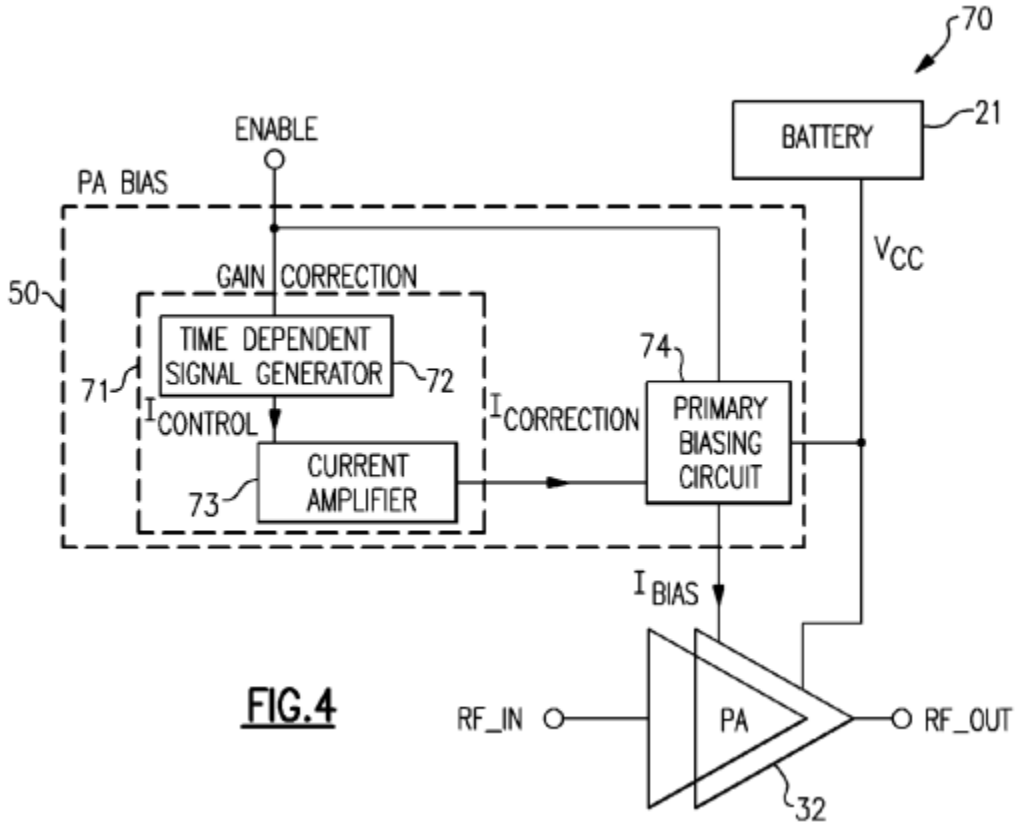

FIG.4

’101 patent at Fig. 4.

[redacted] But in making this argument, Dr. Ricketts is not comparing any language actually recited by the ’101 or ’563 patent claims against any disclosure in the patents’ specification. As I explained above, I understand that this is not the correct legal standard for enablement, but even if it were, Dr. Ricketts is incorrect.

247. Indeed, Dr. Ricketts' enablement arguments relying on Skyworks' domestic industry products are incorrect for multiple reasons.

This is confirmed, for example, by comparing the requirements of independent claim 1 of the ’101 patent, for example, against the requirements of dependent claim 10 which depends from claim 1.[6] As a dependent claim, claim 10 necessarily adds requirements that claim 1 does not recite or require and is, therefore, necessarily narrower than claim 1. The specific additional requirement that claim 10 adds is: “wherein the power amplifier includes a bipolar transistor having an emitter, a base and a collector, ***the base configured to receive the RF signal and the bias current***.” By contrast, claim 1 has no requirement that the bias current be provided to the base of the BJT in the power amplifier. This difference in the scope of claim 1, which is broader than and does not include the requirements of claim 10, is a part of what differentiates these claims. Moreover, although I have provided this example comparing dependent claim 10 against independent claim 1, the same point is true for each of the other patent claims that Dr. Ricketts challenges—namely, ’101 patent, claims 17

[6] Notably, claim 10 of the ’101 patent is not asserted for purposes of demonstrating domestic industry in this Investigation. *See* Opening Report at Section XVI.A. Indeed, ***none*** of the claims that I analyzed to conclude that the SKY85791 practices the ’101 and ’563 patents require a bias current/signal be provided directly to the base of a BJT in a power amplifier. *Id.*

and 21, and ’563 patent, claim 14. *See* Ricketts Opening Report at ¶ 398. Just like claim 1 of the ’101 patent, none of these additional claims recites or requires the bias current / signal to be provided directly to the base of a BJT in a power amplifier. Notably, no party proposed construing any of ’101 claims 1, 17, 21 or ’563 claim 14 as having such a requirement during the *Markman* process in this Investigation, and I understand that it would be improper to attempt to import into these claims requirements that the claims themselves do not recite.

B. The Specification of the ’101 and ’563 Patents Satisfies the Written Description Requirement

251. Dr. Ricketts also opines that the claim elements that recite biasing a power amplifier with a bias current/bias signal generated by a primary biasing circuit in the ’101 and ’563 patents do not satisfy the written description requirement. Those elements are found in the following independent claims:

- “bias circuit configured to . . . generate a bias signal that biases the power amplifier” [and having] “a primary bias circuit configured to generate the bias signal [that biases the power amplifier].” (’563 patent, claim 14)
- “a bias block for biasing the power amplifier, the bias block including . . . a primary biasing circuit configured to generate a bias current for the power amplifier.” (’101 patent, claim 1)
- “A method of biasing a power amplifier, the method comprising: . . . generating a bias current for a power amplifier using a primary biasing circuit.” (’101 patent, claim 17)

- "A bias circuit for biasing a power amplifier, the bias circuit comprising: . . . a primary biasing block configured to generate a bias current for the power amplifier." ('101 patent, claim 21)

Ricketts Opening Report at ¶ 398. I disagree.

252. Dr. Rickett's analysis for written description is nearly the same as his analysis for enablement. As a preliminary matter, Dr. Ricketts appears to apply an incorrect legal standard. I have been informed and understand that that the correct test for written description is whether specification conveys with reasonable clarity to a POSITA that, as of the patent's filing date, the inventors possessed the claimed invention.

253. Moreover, the specifications of the '101 and '563 patents describe the claimed inventions in such terms that a POSITA would understand that the inventors possessed the claimed invention. Figures 4 and 5, for example, show "a schematic block diagram of ***one example*** of a power amplifier system ***including a power amplifier bias block according to one embodiment***" and "a circuit diagram of ***a power amplifier bias block according to one embodiment***." '101 patent at 3:51-55 (emphases added). Figure 4, reproduced below, shows ***a power amplifier bias block 50*** generating a bias current, I_{BIAS}, for a power amplifier 32. *Id.* at Fig. 4; *see also id.* at 8:64-9:22.

[redacted]

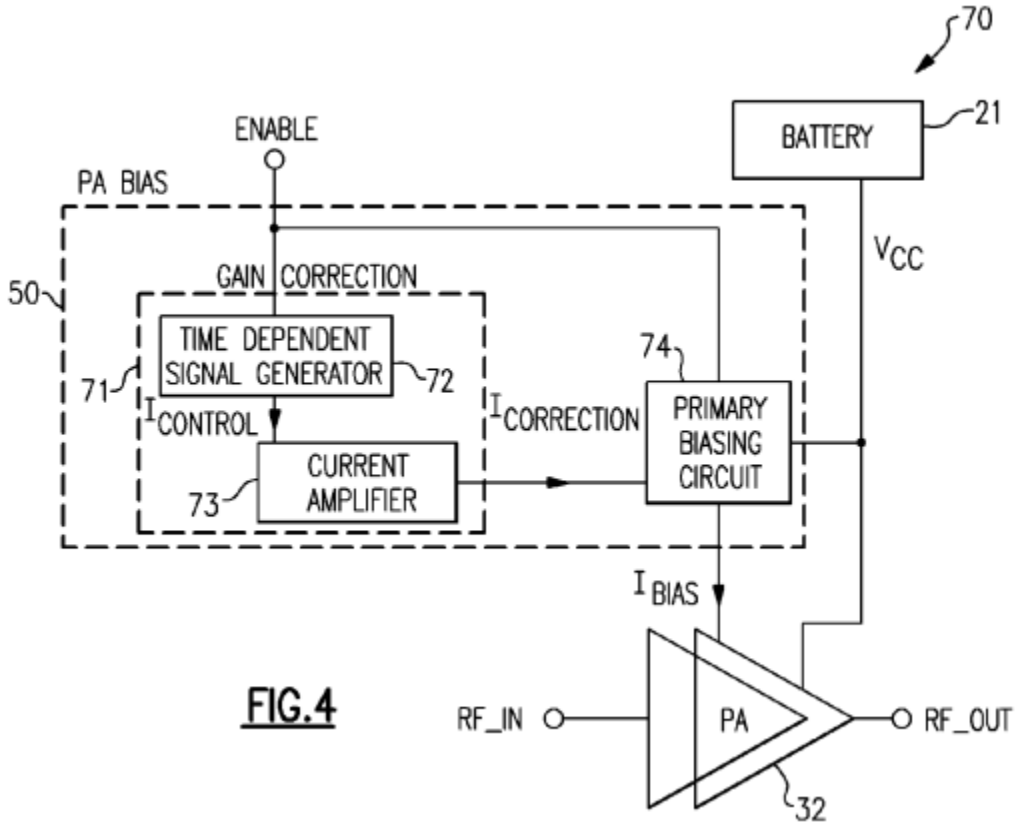

FIG.4

'101 patent at Fig. 4.

[redacted] But in making this argument, Dr. Ricketts is not comparing any language actually recited by the '101 or '563 patent claims against any disclosure in the patents' specification. As I explained above, I understand that this is not the correct legal standard for written description, but even if it were, Dr. Ricketts is incorrect.

255. Indeed, Dr. Ricketts' written description arguments relying on Skyworks' domestic industry products are incorrect for multiple reasons.

This is confirmed, for example, by comparing the requirements of independent claim 1 of the '101 patent, for example, against the requirements of dependent claim 10 which depends from claim 1.[7] As a dependent claim, claim 10 necessarily adds requirements that claim 1 does not recite or require and is, therefore, necessarily narrower than claim 1. The specific additional requirement that claim 10 adds is: "wherein the power amplifier includes a bipolar transistor having an emitter, a base and a collector, ***the base configured to receive the RF signal and the bias current***." By contrast, claim 1 has no requirement that the bias current be provided to the base of the BJT in the power amplifier. This difference in the scope of claim 1, which is broader than and does not include the requirements of claim 10, is a part of what differentiates these claims. Moreover, although I have provided this example comparing dependent claim 10 against independent claim 1, the same point is true for each of the other patent claims that Dr. Ricketts challenges—namely, '101 patent, claims 17 and 21, and '563 patent, claim 14. *See* Ricketts Opening Report at ¶ 398. Just like claim 1 of the '101 patent, none of these additional claims recites or requires the bias current / signal to be provided directly to the base of a BJT in a power amplifier. Notably, no party proposed construing any of '101 claims 1, 17, 21 or '563 claim 14 as having such a requirement

[7] Notably, claim 10 of the '101 patent is not asserted for purposes of demonstrating domestic industry in this Investigation. *See* Opening Report at Section XVI.A. Indeed, ***none*** of the claims that I analyzed to conclude that the SKY85791 practices the '101 and '563 patents require a bias current/signal be provided directly to the base of a BJT in a power amplifier. *Id.*

during the *Markman* process in this Investigation, and I understand that it would be improper to attempt to import into these claims requirements that the claims themselves do not recite.

XVI. SUPPLEMENTATION

258. I reserve the right to supplement my opinions after I have had the opportunity to review further evidence that may be brought to my attention, including any critique of or comments on my expert report or alternative opinions advanced by or on behalf of Respondents.

Date: March 28, 2025

Dr. David Wentzloff

EXHIBIT A

David D. Wentzloff

University of Michigan
1301 Beal Ave. Room 2417D EECS
Ann Arbor, MI 48109-2122

wentzlof@umich.edu
www.eecs.umich.edu/~wentzlof
(734) 647-4499

EDUCATION

Massachusetts Institute of Technology — Cambridge, MA
Ph.D. Candidate in Electrical Engineering and Computer Science, June 2007
Advisor: Anantha Chandrakasan

Massachusetts Institute of Technology — Cambridge, MA
Master of Science in Electrical Engineering and Computer Science, August 2002
Advisor: Jeff Lang

University of Michigan — Ann Arbor, MI
Bachelor of Science in Electrical Engineering, December 1999

PROFESSIONAL EXPERIENCE

UNIVERSITY OF MICHIGAN, Ann Arbor, MI

Full Professor, with Tenure — Sept. 2020 – Present
Faculty Director, Center for Entrepreneurship — Sept. 2014 – Dec. 2022
Associate Professor, with Tenure — Sept. 2013 – Aug. 2020
Assistant Professor — Sept. 2007 – Aug. 2013

EVERACTIVE, Ann Arbor, MI — June 2012 – Present
Co-Founder and Co-CTO

MOVELLUS, Ann Arbor, MI — Aug. 2013 – Present
Co-Founder and Member, Board of Directors

MASSACHUSETTS INSTITUTE OF TECHNOLOGY, Cambridge, MA — Aug. 2002 – June 2007
Research Assistant – Microsystems Technology Laboratory

INTEL CORPORATION, Hillsboro, OR — June 2004 – Aug. 2004
Internship – Portland Technology Development

MASSACHUSETTS INSTITUTE OF TECHNOLOGY, Cambridge, MA — Aug. 2000 – Aug. 2002
Research Assistant – Laboratory for Electromagnetic and Electronic Systems

FORD MOTOR COMPANY, Dearborn, MI — May 1999 – July 2000
Internship – Powertrain Department

TEACHING EXPERIENCE

UNIVERSITY OF MICHIGAN, Ann Arbor, MI
Lecturer – EECS496 Major Design Experience - Professionalism — Winter 2022, Fall 2023, 2024
Lecturer – ENG100 Self-Driving Cars, Drones, and Beyond — Winter 2019

Lecturer – EECS522 Analog Integrated Circuits	Winter '08-'13, '15-'16, '18, '20-'24
Lecturer – EECS215 Introduction to Electronic Circuits	Fall 2012, 2014, 2020
Lecturer – EECS598 Advanced Topics in ICs	Winter 2011, 2015
Lecturer – EECS311 Electronic Circuits	Fall 2008-11
Lecturer – EECS413 Monolithic Amplifier Circuits	Fall 2007, 2015
Student Instructor – EECS 373 Design of Microprocessor-Based Systems	Winter 1999

MASSACHUSETTS INSTITUTE OF TECHNOLOGY, Cambridge, MA

Teaching Assistant – 6.111 Introductory Digital Systems Laboratory	Winter 2007
Head Teaching Assistant – 6.002 Electronic Circuits	Fall 2005

PROFESSIONAL SERVICE

1. IEEE International Solid-State Circuits Conference (ISSCC) 2020-2024
   TPC Member, Wireless Subcommittee
2. IEEE Radio Frequency IC Conference (RFIC) 2013-2023
   Low-Power Radios Sub-Committee Chair, Session Chair, Workshop Organizer, and TPC Member
3. IEEE International Symposium on Low-Power Electronics and Design (ISLPED) 2011-2016
   TPC Member
4. IEEE SOI-3D-Subthreshold Microelectronics Technology Unified Conference (S3S) 2013-2014
   TPC Member
5. IEEE Conference on Ultra-Wideband (ICUWB) 2008-2010
   Session Chair, TPC Member
6. Guest editor for the IEEE T-MTT, the IEEE Communications Magazine, and the Elsevier Journal of Signal Processing: Image Communication

AWARDS

1. University of Michigan Faculty Recognition Award, 2024
2. IEEE International Conference on Synthesis, Modeling, Analysis and Simulation Methods, and Applications to Circuit Design (SMACD), Best Paper Award, 2023
3. IEEE Custom Integrated Circuits Conference (CICC) 2020 Outstanding Invited Paper Award, 2020
4. ECE Innovator Award, SkyGig (role: advisor), 2018
5. Joel and Ruth Spira Excellence in Teaching Award, 2015
6. Eta Kappa Nu (HKN) Professor of the Year, 2014-2015
7. EECS Department Outstanding Achievement Award, 2015
8. ISSCC 2014 Outstanding Forum Speaker Award
9. NSF CAREER Award, 2012
10. IEEE Subthreshold Microelectronics Conference Best Paper Award, 2012
11. DAC/ISSCC Student Design Contest Award, 2011
12. Eta Kappa Nu (HKN) Professor of the Year Award, 2009-2010
13. DARPA Young Faculty Award, 2009
14. Analog Devices distinguished scholar, 2004
15. MIT Masterworks (1 of 9 annual awards for excellence in Master's research), 2002

PUBLICATIONS

Journal Papers

1. A. Li, et al., "A Fully Integrated, Automatically Generated DC–DC Converter Maintaining >75% Efficiency From 398 K Down to 23 K Across Wide Load Ranges in 12-nm FinFET," in IEEE Solid-State Circuits Letters, vol. 7, pp. 42-45, 2024.
2. M. Moosavifar, J. Im and D. D. Wentzloff, "An Interference-Resilient Bit-Level Duty-Cycled ULP Receiver Leveraging a Dual-Chirp Modulation," in IEEE Journal of Solid-State Circuits, vol. 59, no. 2, pp. 337-348, Feb. 2024.
3. Anhang Li, Jeongsup Lee, Prashansa Mukim, Brian D. Hoskins, Pragya Shrestha, David Wentzloff, David Blaauw, Dennis Sylvester, Mehdi Saligane, "A fully integrated, automatically generated DC-DC converter maintaining >75% efficiency from 398 K down to 23 K across wide load ranges in 12 nm FinFET," IEEE Solid State Circuits Letters, 2024.
4. A. Gupta, T. J. Odelberg and D. Wentzloff, "Low-Power Heterodyne Receiver Architectures: Review, Theory, and Examples," in IEEE Open Journal of the Solid-State Circuits Society, vol. 3, pp. 225-238, 2023.
5. D. S. Truesdell, J. Boley, A. Wokhlu, A. Gravel, D. D. Wentzloff and B. H. Calhoun, "Modeling and Design of Cold-Start Charge Pumps for Photovoltaic Energy Harvesters," in IEEE Transactions on Circuits and Systems I: Regular Papers, vol. 70, no. 11, pp. 4334-4345, Nov. 2023.
6. N. M. Michels, A. J. Jinia, S. D. Clarke, H. -S. Kim, S. A. Pozzi and D. D. Wentzloff, "Real-Time Classification of Radiation Pulses With Piled-Up Recovery Using an FPGA-Based Artificial Neural Network," IEEE Access, vol. 11, pp. 78074-78083, 2023.
7. M. Moosavifar, J. Im and D. D. Wentzloff, "An Interference-Resilient Bit-Level Duty-Cycled ULP Receiver Leveraging a Dual-Chirp Modulation," IEEE Journal of Solid-State Circuits, 2023.
8. A. J. Jinia, T.E. Maurer, C. A. Meert, O. V. Pakari, S. D. Clarke, H. S. Kim, D. D. Wentzloff, and S. A. Pozzi, "Prompt photofission neutron detection in depleted uranium," accepted for publication in Physical Review Applied, 2023.
9. Y. K. Cherivirala and D. D. Wentzloff, "A Capacitor-less Digital LDO Regulator with Synthesizable PID Controller Achieving 99.75% Efficiency and 93.3ps Response Time in 65nm," in IEEE Transactions on Circuits and Systems II: Express Briefs, 2023.
10. K. Kwon, O. A. B. Abdelatty and D. D. Wentzloff, "PLL Fractional Spur's Impact on FSK Spectrum and a Synthesizable ADPLL for a Bluetooth Transmitter," in IEEE Journal of Solid-State Circuits, 2023.
11. Yu-Ju Lin; Hyunsoo Song; Sungjin Oh; Mihaly Voroslakos; Kanghwan Kim; Xing Chen; David Wentzloff; Gyorgy Buzsaki; Sung-Yun Park; Euisik Yoon, "A 3.1-5.2GHz, Energy-Efficient Single Antenna, Cancellation-Free, Bitwise Time-Division Duplex Transceiver for High Channel Count Optogenetic Neural Interface," IEEE Transactions on Biomedical Circuits and Systems, 2022.
12. Abbas J. Jinia; Tessa E. Maurer; Christopher A. Meert; Michael Y. Hua; S. D. Clarke; Hun-Seok Kim; David D. Wentzloff; Sara A. Pozzi, "An Artificial Neural Network System for Photon-Based Active Interrogation Applications," IEEE Access, Vol. 9, 2021.
13. D. D. Wentzloff, A. Alghaihab, J. Im, O. Abdelatty, T. Odelberg, "Ultralow-Power Receivers: Overcoming Battery Limitations to Facilitate Self-Powered Operation," IEEE Solid-State Circuits Magazine, Vol. 13, No. 3, 2021, pp. 33-37.
14. A. J. Jinia, T. E. Maurer, C. A. Meert, M. Y. Hua, S. D. Clarke; H.-S. Kim, D. D. Wentzloff, S. A. Pozzi "An Artificial Neural Network System for Photon-Based Active Interrogation Applications," IEEE Access, August 2021, pp. 119871 – 119880.

15. O. Abdelatty, X. Chen, A. Alghaihab, D. Wentzloff, "Bluetooth Communication Leveraging Ultra-Low Power Radio Design," Journal of Sensor and Actuator Networks (JSAN), **Featured Article**.
16. X. Chen, A. Alghaihab, Y. Shi, D. S. Truesdell, B. H. Calhoun, D. D. Wentzloff, "A Crystal-Less BLE Transmitter with Clock Recovery from GFSK-Modulated BLE Packets," IEEE Journal of Solid-State Circuits (JSSC), Vol. 56, No. 7, pp. 1963 – 1974, January 2021.
17. L.-X. Chuo, D. Blaauw, H.-S. Kim, Z. Feng, Y. Kim, N. Chiotellis, M. Yasuda, S. Miyoshi, M. Kawaminami, A. Grbic, D. D. Wentzloff, "Millimeter-Scale Node-to-Node Radio Using a Carrier Frequency-Interlocking IF Receiver for a Fully Integrated 4 x 4 x 4 mm^3 Wireless Sensor Node," IEEE Journal of Solid-State Circuits (JSSC), Vol. 55, No. 5, 2020.
18. J. Im, H.-S. Kim, D. D. Wentzloff, "A 220 µW -83 dBm 5.8 GHz 3rd-Harmonic Passive Mixer-First LP-WUR for IEEE 802.11ba," IEEE Transactions on Microwave Theory and Techniques. May 2019
19. A. Alghaihab, Y. Shi, J. Breiholz, H.-S. Kim, B. H. Calhoun, D. D. Wentzloff, "Enhanced Interference Rejection Bluetooth Low-Energy Back-Channel Receiver with LO Frequency Hopping," IEEE Journal of Solid-State Circuits (JSSC), March 2019
20. X. Chen, J. Breiholz, F. B. Yahya, C. J. Lukas, H.-S. Kim, B. H. Calhoun, D. D. Wentzloff, "Analysis and Design of an Ultra-Low-Power Bluetooth Low-Energy Transmitter With Ring Oscillator-Based ADPLL and 4x Frequency Edge Combiner," IEEE Journal of Solid-State Circuits (JSSC), February 2019, pp. 1-12
21. C. J. Lukas, F. B. Yahya, J. Breiholz, A. Roy, X. Chen, H. N. Patel, N. Liu, A. Kosari, S. Li, D. Akella, O. Ayorinde, D. D. Wentzloff, B. H. Calhoun, "A 1.02µW Battery-less, Continuous Sensing and Post-processing SiP for Wearable Applications," in Biomedical Circuits and Systems, IEEE Transactions, Jan. 2019
22. A. Kosari, J. Breiholz, N. Liu, B.H. Calhoun, D.D. Wentzloff, "A 0.5 V 68 nW ECG Monitoring Analog Front-End for Arrhythmia Diagnosis," *J. Low Power Electron. Appl. 8*, 27, June 2018
23. A. Alghaihab, H.-S. Kim, D. D. Wentzloff, "Analysis of Circuit Noise and Non-ideal Filtering Impact on Energy Detection Based Ultra-Low-Power Radios Performance," IEEE Transactions on Circuits and Systems II: Express Briefs, No. 99., Februrary 2018
24. A. Kosari, H.-S. Kim, D. D. Wentzloff, "A MURS Band Digital Quadrature Transmitter with Class-B I/Q Cell Sharing for Long Range IoT Applications, "IEEE Transactions on Circuits and Systems II (TCAS-II), No. 99, January 2018
25. Y.-J. Lin, S.Y. Park, X. Chen, D. Wentzloff, E. Yoon, "4.32-pJ/b, Overlap-Free, Feedforward Edge-Combiner-Based Ultra-Wideband Transmitter for High-Channel-Count Neural Recording," IEEE Microwave and Wireless Components Letters, vol. 28, no. 1, January 2018, pp. 52-54
26. T. Jang, G. Kim, B. Kempke, M. B. Henry, N. Chiotellis, C. Pfeiffer; D. Kim, Y. Kim, Z. Foo, H. Kim, A. Grbic, D. Sylvester, H.-S. Kim, D. D. Wentzloff; D. Blaauw, "Circuit and System Designs of Ultra-Low Power Sensor Nodes With Illustration in a Miniaturized GNSS Logger for Position Tracking: Part I—Analog Circuit Techniques," IEEE Transactions on Circuits and Systems I (TCAS-I), Vol. 64, No. 9, 2017, pp 2237-2249
27. T. Jang, G. Kim, B. Kempke, M. B. Henry, N. Chiotellis, C. Pfeiffer, D. Kim, Y. Kim, Z. Foo, H. Kim, A. Grbic, D. Sylvester, H.-S. Kim, D. D. Wentzloff, D. Blaauw, "Circuit and System Designs of Ultra-Low Power Sensor Nodes With Illustration in a Miniaturized GNSS Logger for Position Tracking: Part II—Data Communication, Energy Harvesting, Power Management, and Digital Circuits," IEEE Transactions on Circuits and Systems I (TCAS-I), Vol. 64, No. 9, 2017, pp. 2250-2262
28. Y. Chen, N. Chiotellis, L.-X. Chuo, C. Pfeiffer, Y, Shi, R. G. Dreslinski, A. Grbic, T. Mudge, D. D. Wentzloff, D. Blaauw, H. S. Kim, "Energy-Autonomous Wireless Communication for Millimeter-Scale Internet-of-Things Sensor Nodes," IEEE Journal on Selected Areas in Communications (JSAC), vol. 34, no. 12, pp. 3962-3977, December 2016

29. Yao Shi; Myungjoon Choi; Ziyun Li; Zhihong Luo; Gyouho Kim; Zhiyoong Foo; Hun-Seok Kim; David D. Wentzloff; David Blaauw, “A 10 mm³ Inductive Coupling Radio for Syringe-Implantable Smart Sensor Nodes,” IEEE Journal of Solid-State Circuits, 2016
30. Hun Seok Kim; David D. Wentzloff, “Back-Channel Wireless Communication Embedded in WiFi-Compliant OFDM Packets,” IEEE Journal on Selected Areas in Communications, 2016
31. Yajing Chen; Nikolaos Chiotellis; Li-Xuan Chuo; Carl Pfeiffer; Yao Shi; Ronald G. Dreslinski; Anthony Grbic; Trevor Mudge; David D Wentzloff; David Blaauw; Hun Seok Kim, “Energy-Autonomous Wireless Communication for Millimeter-Scale Internet-of-Things Sensor Nodes,” IEEE Journal on Selected Areas in Communications, 2016
32. A. Roy, A. Klinefelter, F. B. Yahya, X. Chen, L. P. Gonzalez-Guerrero, C. J. Lukas, D. A. Kamakshi, J. Boley, K. Craig, M. Faisal, S. Oh, N. E. Roberts, Y. Shakhsheer, A. Shrivastava, D. P. Vasudevan, D. D. Wentzloff, B. H. Calhoun, “A 6.45 \mu{\rm W} Self-Powered SoC With Integrated Energy-Harvesting Power Management and ULP Asymmetric Radios for Portable Biomedical Systems,” in Biomedical Circuits and Systems, IEEE Transactions on , vol.9, no.6, pp.862-874, Dec. 2015.
33. O. U. Khan, D. D. Wentzloff, “Hardware Accelerator for Probabilistic Inference in 65-nm CMOS,” IEEE Transactions on VLSI Systems, 2015.
34. A. Shrivastava, N. E. Roberts, O. U. Khan, D. D. Wentzloff, B. H. Calhoun, “A 10 mV-Input Boost Converter With Inductor Peak Current Control and Zero Detection for Thermoelectric and Solar Energy Harvesting With 220 mV Cold-Start and - 14.5 dBm, 915 MHz RF Kick-Start,” IEEE Journal of Solid-State Circuits, Volume: 50, Issue: 8, 2015, pp. 1820-1832.
35. V. Misra, A. Bozkurt, B. Calhoun, T. Jackson, J. Jur, J. Lach, B. Lee, J. Muth, O. Oralkan, M. Ozturk, S. Trolier-McKinstry, D. Vashaee, D. D. Wentzloff, Y. Zhu, “Flexible Technologies for Self-Powered Wearable Health and Environmental Sensing,” Proceedings of the IEEE, Volume: 103, Issue: 4, 2015, pp. 665 – 681
36. O. Khan, D. D. Wentzloff, “8.1 nJ/b 2.4 GHz Short-Range Communication Receiver in 65 nm CMOS,” IEEE Transactions on Circuits and Systems I, Volume: 62, Issue: 7, 2015, pp. 1854 – 1862
37. M. Rais-Zadeh, J. T. Fox, D. D. Wentzloff, Y. B. Gianchandani, “Reconfigurable Radios: A Possible Solution to Reduce Entry Costs in Wireless Phones,” Proceedings of the IEEE, Volume: 103, Issue: 3, 2015, pp. 438 – 451
38. K.-K. Huang, D. D. Wentzloff, "A 1.2-MHz 5.8-uW Temperature-Compensated Relaxation Oscillator in 130-nm CMOS," IEEE Transactions on Circuits and Systems - II, vol. 61, no. 5, May 2014, pp. 334-338
39. K.-K. Huang, J. K. Brown, E. Ansari, R. R. Rogel, Y. Lee, H. Kim, D. D. Wentzloff, "An Ultra-Low-Power 9.8GHz Crystal-Less UWB Transceiver with Digital Baseband Integrated in 0.18µm BiCMOS," IEEE Journal on Solid-State Circuits (JSSC), 2013
40. S. Han, D. D. Wentzloff, "Characterization of the Proximity Effect from Tungsten TSVs on 130-nm CMOS Devices in 3-D ICs," IEEE Transactions on Very Large Scale Integration (VLSI) Systems, Sept. 2014, pp 2025-2029
41. M. Faisal, R. T. Schiffer, M. J. Haling, M. Flaska, S. A. Pozzi, D. D. Wentzloff, "A Data Processing System for Real-Time Pulse Processing and Timing Enhancement for Nuclear Particle Detection Systems," IEEE Transactions on Nuclear Science (TNS), 2013
42. J. K. Brown, D. D. Wentzloff, "A GSM-Based Clock-Harvesting Receiver With –87 dBm Sensitivity for Sensor Network Wake-Up," IEEE Journal of Solid-State Circuits (JSSC), vol. 48, no. 3, March 2013, pp. 661-669.

43. O. U. Khan, S.-Y. Chen, W. E. Stark, D. D. Wentzloff, "Impact of Compressed Sensing and Finite Quantization on the Performance of a UWB Receiver with Multipath Channel Estimation," IEEE Journal on Emerging and Selected Topics in Circuits and Systems (JETCAS), Vol. 2, No. 3, Sept. 2012, pp. 460-469.
44. J. K. Brown, D. D. Wentzloff, "A Clock-Harvesting Receiver using 3G CDMA Signals in the 1900MHz-Band," to appear in IEEE Transactions on Circuits and Systems II (TCAS-II), 2012.
45. N. E. Roberts, S. Oh, D. D. Wentzloff, "Exploiting Channel Periodicity in Body Sensor Networks," IEEE Journal on Emerging and Selected Topics in Circuits and Systems (JETCAS), vol. 2, no. 1, Mar. 2012, pp. 3-14.
46. B. H. Calhoun, J. Lach, J. Stankovic, D. D. Wentzloff, K. Whitehouse, A. T. Barth, J. K. Brown, Q. Li, S. Oh, N. E. Roberts, Y. Zhang, "Body Sensor Networks: A Holistic Approach from Silicon to Users," Proceedings of the IEEE, Vol. 100, No. 1, 2012, pp. 91-106.
47. K. K. Huang, D. D. Wentzloff, "A 60 GHz Antenna-Referenced Frequency-Locked Loop in 0.13µm CMOS for Wireless Sensor Networks," IEEE Journal of Solid-State Circuits (JSSC), Vol. 46, No. 12, Dec. 2011, pp. 2956-2965.
48. Y. Park, D. D. Wentzloff, "A Cyclic Vernier TDC for ADPLLs Synthesized From a Standard Cell Library," IEEE Transactions on Circuits and Systems I (TCAS-I), Vol. 58, No. 7, July 2011, pp. 1511-1517.
49. Y. Park, D. D. Wentzloff, "An All-Digital 12 pJ/Pulse IR-UWB Transmitter Synthesized From a Standard Cell Library," IEEE Journal of Solid-State Circuits (JSSC), Vol. 46, No. 5, May 2011, pp. 1147-1157.
50. M. Faisal, R. T. Shiffer, M. Flaska, S. A. Pozzi, D. D. Wentzloff, "A correlation-based pulse detection technique for gamma-ray/neutron detectors," Nuclear Instruments and Methods in Physics Research A: Accelerators, Spectrometers, Detectors and Associated Equipment, Oct. 2010.
51. R. T. Schiffer, M. Flaska, S. A. Pozzi, S. Carney, D. D. Wentzloff, "A scalable FPGA-based digitizing platform for radiation data acquisition," Nuclear Instruments and Methods in Physics Research Section A: Accelerators, Spectrometers, Detectors and Associated Equipment, Oct. 2010.
52. A. P. Chandrakasan, F. S. Lee, D. D. Wentzloff, V. Sze, B. P. Ginsburg, P. P. Mercier, D. C. Daly, R. Blazquez, "Low-Power Impulse UWB Architectures and Circuits," Proceedings of the IEEE, Vol. 97, No. 2, Feb. 2009, pp. 332-352.
53. D. D. Wentzloff , A. P. Chandrakasan, "Gaussian Pulse Generators for Subbanded Ultra-Wideband Transmitters," IEEE Transactions on Microwave Theory and Techniques (TMTT), Vol. 54, No. 4, Apr. 2006, pp. 1647-1655.
54. D. D. Wentzloff, R. Blazquez, F. S. Lee, B. P. Ginsburg, J. Powell, A. P. Chandrakasan, "System Design Considerations for Ultra-Wideband Communication," IEEE Communications Magazine, vol. 43, no. 8, Aug. 2005, pp. 114-121.
55. B. H. Calhoun, D. C. Daly, N. Verma, D. F. Finchelstein, D. D. Wentzloff, A. Wang, S. Cho, A. P. Chandrakasan, "Design Considerations for Ultra-Low Energy Wireless Microsensor Nodes," IEEE Transactions on Computers, Vol. 54, No. 6, June 2005, pp. 727-740.

Conference Papers

1. Kyumin Kwon and David Wentzloff, “Synthesizable ADPLL Generator: From Specification to GDS,” IEEE International Conference on Synthesis, Modeling, Analysis and Simulation Methods, and Applications to Circuit Design (SMACD), July 2023. **Best Paper Award**.
2. Li-Yu Chen and David Wentzloff, “An Automated Framework for Switched-Capacitor Power Amplifier Implementation Verified in 65 nm CMOS,” IEEE International Conference on Synthesis, Modeling, Analysis and Simulation Methods, and Applications to Circuit Design (SMACD), July 2023.

3. K. Kwon and D. D. Wentzloff, "A 800 MHz Fully Synthesizable PLL with Calibration-Free Feedforward Noise Cancellation," 2023 Joint Conference of the European Frequency and Time Forum and IEEE International Frequency Control Symposium (EFTF/IFCS), 2023, pp. 1-4.
4. Y. K. Cherivirala, M. Saligane and D. D. Wentzloff, "An Open Source Compatible Framework to Fully Autonomous Digital LDO Generation," 2023 IEEE International Symposium on Circuits and Systems (ISCAS), 2023, pp. 1-5.
5. Christopher J. Lukas, Farah B. Yahya, Kuo-Ken Huang, Jim Boley, Daniel S. Truesdell, Jacob Breiholz; Atul Wokhlu, Kyle Craig, Jonathan K. Brown, Andrew Fitting, William Moore, Andy Shih, Alice Wang, Alain Gravel, David D. Wentzloff, Benton H. Calhoun, "15.2 A 2.19µW Self-Powered SoC with Integrated Multimodal Energy Harvesting, Dual-Channel up to −92dBm WRX and Energy-Aware Subsystem," 2023 IEEE International Solid- State Circuits Conference (ISSCC), San Francisco, CA, USA, 2023, pp. 238-240.
6. M. Moosavifar, Y. K. Cherivirala and D. D. Wentzloff, "A 320µW Receiver with -58dB SIR Leveraging a Time-Varying N-Path Filter," IEEE Radio Frequency Integrated Circuits Symposium (RFIC), Denver, CO, USA, 2022, pp. 303-306.
7. K. Kwon, O. Abdelatty and D. Wentzloff, "Open-Source Fully-Synthesizable ADPLL for a Bluetooth Low-Energy Transmitter in 12nm FinFET Technology," 2022 IEEE Radio Frequency Integrated Circuits Symposium (RFIC), Denver, CO, USA, 2022, pp. 155-158.
8. Kuo-Ken Huang, Jonathan K. Brown, Richard K. Sawyer, Christopher J. Lukas, Farah B. Yahya, Alice Wang, Nathan E. Roberts, Benton H. Calhoun, David D. Wentzloff, "ULP Receivers in Self-Powered Industrial IoT Applications: Challenges and Prospects," 2022 IEEE Custom Integrated Circuits Conference (CICC), Newport Beach, CA, USA, 2022, pp. 1-8.
9. M. Moosavifar, J. Im, T. Odelberg and D. Wentzloff, "A 110uW 2.5kb/s −103dBm-Sensitivity Dual-Chirp Modulated ULP Receiver Achieving −41dB SIR," 2022 IEEE International Solid- State Circuits Conference (ISSCC), San Francisco, CA, USA, 2022, pp. 402-404.
10. A. J. Jinia, T. E. Maurer, S. D. Clarke, H. -S. Kim, D. D. Wentzloff and S. A. Pozzi, "Special Nuclear Material Detection Using Trans-Stilbene and Artificial Neural Network," 2021 IEEE Nuclear Science Symposium and Medical Imaging Conference (NSS/MIC), Piscataway, NJ, USA, 2021, pp. 1-3.
11. Milad Moosavifar; David Wentzloff, "A High-Efficiency Lens-Coupled 60GHz On-Chip Antenna Module for Millimeter-Scale Wireless Transmitters," International Conference on Electromagnetics in Advanced Applications (ICEAA), 2021
12. Trevor J. Odelberg; Jaeho Im; David D. Wentzloff, "A 2.1mW −109dBm NB-IoT Wake-Up Receiver," IEEE Radio Frequency Integrated Circuits Symposium (RFIC), June 2021.
13. Omar Abdelatty; Abdullah Alghaihab; Yaswanth K. Cherivirala; Sumanth Kamineni; Benton Calhoun; David D. Wentzloff, "A 300µW Bluetooth-Low-Energy Backchannel Receiver Employing a Discrete-Time Differentiator-Based Coherent GFSK Demodulation," IEEE Radio Frequency Integrated Circuits Symposium (RFIC), June 2021.
14. Milad Moosavifar; David Wentzloff, "Analysis of Design Trade-Offs in Ultra-Low-Power FSK Receivers for Phase-Based Ranging," IEEE Topical Conference on Wireless Sensors and Sensor Networks (WiSNeT), 2021.
15. J. Im, H. Kim, O. Abdelatty, D. D. Wentzloff, "A Fully Integrated 62-to-69GHz Crystal-Less Transceiver with 12 Channels Tuned by a Transmission-Line-Referenced FLL in 0.13µm BiCMOS," IEEE International Solid-State Circuits Conference (ISSCC), Feb. 2021.

16. K-K. Huang, J. K. Brown, N. Collins, R. K. Sawyer, F. B. Yahya, A. Wang, N. E. Roberts, B. H. Calhoun, D. D. Wentzloff, “A Fully-Integrated 2.7µW -70.2dBm-Sensitivity Wake-Up Receiver with Charge-Domain Analog Front-End, -16.5dB-SIR, FEC and Cryptographic Checksum,” IEEE International Solid-State Circuits Conference (ISSCC), Feb. 2021.
17. Abbas J. Jinia; Kyle E. Laferty; Shaun D. Clarke; Hun-Seok Kim; David D. Wentzloff; Sara A. Pozzi, “Development of an Artificial Neural Network for Special Nuclear Material Detection in a Mixed Photon-Neutron Environment,” IEEE Nuclear Science Symposium and Medical Imaging Conference (NSS/MIC), 2020.
18. T. Ajayi, S. Kamineni, Y. K. Cherivirala, M. Fayazi, K. Kwon, M. Saligane, S. Gupta, C.-H. Chen, D. Sylvester, D. Blaauw, R. Dreslinski, B. Calhoun, D. D. Wentzloff, “An Open-source Framework for Autonomous SoC Design with Analog Block Generation,” IFIP/IEEE 28th International Conference on Very Large Scale Integration (VLSI-SOC), 2020.
19. T. Ajayi, Y. K. Cherivirala, K. Kwon, S. Kamineni, M. Saligane, M. Fayazi, S. Gupta, C.-H. Chen, D. Sylvester, D. Blaauw, R. Dreslinski Jr, B. Calhoun, D. D. Wentzloff, “Fully Autonomous Mixed Signal SoC Design & Layout Generation Platform,” Hot Chips: A Symposium on High Performance Chips, August 2020
20. M. Moosavifar, D. Wentzloff, “A High Gain Lens-Coupled On-Chip Antenna Module for Miniature-Sized Millimeter-Wave Wireless Transceivers,” IEEE International Applied Computational Electromagnetics Society Symposium (ACES), 2020
21. J. Im, J. Breiholz, S. Li, B. Calhoun, D. D. Wentzloff, “A Fully Integrated 0.2V 802.11ba Wake-Up Receiver with -91.5dBm Sensitivity,” IEEE Radio Frequency Integrated Circuits Symposium (RFIC), 2020
22. S. Li, J. Breiholz, S. Kamineni, J. Im, D. D. Wentzloff, B. Calhoun, “An 85 nW IoT Node-Controlling SoC for Mels Power-Mode Management and Phantom Energy Reduction,” IEEE International Symposium on Circuits & Systems, May 2020
23. A. Alghaihab, X. Chen, Y. Shi, D. S. Truesdell, B. H. Calhoun, D. D. Wentzloff, “A Crystal-Less BLE Transmitter with -86dBm Frequency-Hopping Back-Channel WRX and Over-the-Air Clock Recovery from a GFSK-Modulated BLE Packet,” IEEE International Solid-State Circuits Conference (ISSCC), Feb. 2020.
24. J. K. Brown, D. Abdallah, J. Boley, N. Collins, K. Craig, G. Glennon, K-K. Huang, C. J. Lukas, W. Moore, R. K. Sawyer, Y. Shakhsheer, F. B. Yahya, A. Wang, N. E. Roberts, D. D. Wentzloff, B. H. Calhoun, “A 65nm Energy-Harvesting ULP SoC with 256kB Cortex-M0 Enabling an 89.1µW Continuous Machine Health Monitoring Wireless Self-Powered System,” IEEE International Solid-State Circuits Conference (ISSCC), Feb. 2020.
25. D. D. Wentzloff, A. Alghaihab and J. Im, "Ultra-Low Power Receivers for IoT Applications: A Review," 2020 IEEE Custom Integrated Circuits Conference (CICC), Boston, MA, USA, 2020, pp. 1-8. **Outstanding Invited Paper Award**
26. S. Li, J. Breiholz, S. Kamineni, J. Im, D. D. Wentzloff, B. Calhoun, “An 85 nW IoT Node-Controlling SoC for Mels Power-Mode Management and Phantom Energy Reduction,” IEEE International Symposium on Circuits & Systems, May 2020
27. O. Abdelatty, H. Bishop, Y. Shi, X. Chen, A. Alghaihab, B. Calhoun and D. Wentzloff, "A Low Power Bluetooth Low-Energy Transmitter with a 10.5nJ Startup-Energy Crystal Oscillator," Proceedings of the 45th European Solid-State Circuits Conference, Krakow, Poland, September 2019
28. N. Ebrahimi, B. Yektakhah, K. Sarabandi, H. S. Kim, D. D. Wentzloff, D. Blaauw, "A Novel Physical Layer Security Technique Using Master-Slave Full Duplex Communication," International Microwave Symposium (IMS), June 2019, Boston, MA

29. L.-X. Chuo, Y. Kim, N. Chiotellis, M. Yasuda, S. Miyoshi, M. Kawaminami, A. Grbic, D. D. Wentzloff, H.-S. Kim, D. Blaauw, “A 4×4×4-mm3 Fully Integrated Sensor-to-Sensor Radio using Carrier Frequency Interlocking IF Receiver with -94 dBm Sensitivity,” IEEE Radio Frequency Integrated Circuits Symposium (RFIC), June 2019. **Best Paper Award Finalist**.
30. Y. Shi, X. Chen, H-S. Kim, D. Blaauw, D. Wentzloff, “A 606µW mm-Scale Bluetooth Low-Energy Transmitter Using Co-Designed 3.5x3.5mm2 Loop Antenna and Transformer-Boost Power Oscillator,” IEEE International Solid-State Circuits Conference (ISSCC), Feb. 2019.
31. A. Kosari, D. D. Wentzloff, "MURS Band for LPWAN Applications," *2019 IEEE Topical Conference on Wireless Sensors and Sensor Networks (WiSNet),* Orlando, FL, January 2019
32. A. Kosari, M. Moosavifar and D. D. Wentzloff, “A 152µW -99dBm BPSK/16-QAM OFDM Receiver for LPWAN Applications”, accepted in 2018 IEEE Asian Solid-State Circuits Conference (A-SSCC), Taipei, 2018
33. J. Im, Hu. S. Kim, D. D. Wentzloff, “A 470µW −92.5dBm OOK/FSK Receiver for IEEE 802.11 WiFi LP-WUR,” ESSCIRC 2018 – IEEE 44th European Solid State Circuits Conference (ESSCIRC), 2018.
34. Y. Dai, W. Peng, Y. Wang, L.-X. Chuo, K. Suri, H. Zheng, D. D. Wentzloff, H.-S. Kim, "Implementation and Evaluation of Bi-Directional WiFi Back-channel Communication," 2018 IEEE 29th Annual International Symposium on Personal, Indoor and Mobile Radio Communications (PIMRC), September 2018
35. H. Kim and D. D. Wentzloff, "A 60-GHz Integrated Slot Loop Antenna in 0.13-µm BiCMOS Technology," 2018 IEEE Antennas and Propagation Society International Symposium (APSURSI), July 2018
36. A. Di Fulvio, C. Fu, T. H. Shin, S. D. Clarke, D. Wentzloff, H. S. Kim, S. A. Pozzi, "Artificial Neural Network Algorithms for Classification and Recovery of Piled-up Pulses in Active Interrogation of Special Nuclear Material," IEEE Symposium on Radiation Measurements and Applications (SORMA), June 2018
37. X. Chen, J. Breiholz, F. Yahya, C.r Lukas, H.-S. Kim, B. Calhoun, D. D. Wentzloff, “A 486 µW All-Digital Bluetooth Low Energy Transmitter with Ring Oscillator Based ADPLL for IoT applications”, 2018 IEEE Radio Frequency Integrated Circuits Symposium (RFIC), June 2018
38. J. Im, H.-S. Kim, D. D. Wentzloff, "A 217µW -82dBm IEEE 802.11 Wi-Fi LP-WUR using a 3rd-Harmonic Passive Mixer", IEEE Radio Frequency Integrated Circuits Symposium (RFIC), June 2018
39. A. Alghaihab, J. Breiholz, H.-S. Kim, B. Calhoun, D. D. Wentzloff, “A 150 µW -57.5 dBm-Sensitivity Bluetooth Low-Energy Back-Channel Receiver with LO Frequency Hopping,” IEEE Radio Frequency Integrated Circuits Symposium (RFIC), June 2018
40. D. M. Moore, J. A. Fredenburg, M. Faisal, D. D. Wentzloff, “Static Timing Analysis for Ring Oscillators,” Asia and South Pacific Design Automation Conference (ASP-DAC), January 2018.
41. J. Breiholz, F. Yahya, C. J. Lukas, X. Chen, K. Leach, D. D. Wentzloff, B. H. Calhoun, “A 4.4 nW lossless sensor data compression accelerator for 2.9x system power reduction in wireless body sensors,” 2017 IEEE 60th International Midwest Symposium on Circuits and Systems (MWSCAS), August 2017
42. F. Yahya, C. J. Lukas, J. Breiholz, A. Roy, H. N. Patel, N. Liu, X. Chen, A. Kosari, S. Li, D. Akella, O. Ayorinde, D. D. Wentzloff, B. H. Calhoun, “A battery-less 507nW SoC with integrated platform power manager and SiP interfaces,” Symposium on VLSI Circuits, 2017
43. J. Im, H. S. Kim, D. D. Wentzloff, "A 335µW -72dBm Receiver for FSK Back-Channel Embedded in 5.8GHz Wi-Fi OFDM Packets," Radio Frequency Integrated Circuits Symposium (RFIC), June 2017
44. X. Chen, H. S. Kim, D. D. Wentzloff, "An Analysis of Phase Noise Requirements for Ultra-Low-Power FSK Radios," Radio Frequency Integrated Circuits Symposium (RFIC), June 2017

45. F. Yahya, C. J. Lukas, J. Breiholz, A. Roy, H. N. Patel, N. Liu, X. Chen, A. Kosari, S. Li, D. Akella, O. Ayorinde, D. D. Wentzloff, B. H. Calhoun, "A Battery-Less 507nW SoC with Integrated Platform Power Manager and SiP Interfaces," IEEE Symposium on VLSI Circuits (VLSI), June 2017, pp. C338-339
46. L. Chuo, Y. Shi, Z. Luo, N. Chiotellis, Z. Gyouho Kim, Y. Kim, A. Grbic, D. D. Wentzloff, H. S. Kim, D. Blaauw, "7.4 A 915MHz asymmetric radio using Q-enhanced amplifier for a fully integrated 3×3×3mm3 wireless sensor node with 20m non-line-of-sight communication," IEEE International Solid-State Circuits Conference (ISSCC), February 2017. pp. 132 - 133
47. H. Zhang, D. D. Wentzloff, H. S. Kim, "Software-Defined, WiFi and BLE Compliant Back-Channel for Ultra-Low Power Wireless Communication," IEEE GLOBECOM, Dec. 2016
48. Y. Shi, M. Choi, Z. Li, G. Kim, Z. Foo, H.-S. Kim, D. D. Wentzloff, D. Blaauw, “A 10mm3 Syringe-Implantable Near-Field Radio System on Glass Substrate” IEEE International Solid-State Circuits Conference (ISSCC), Feb. 2016, pp. 448-449.
49. M. Faisal, N. E. Roberts, D. D. Wentzloff, “A 300nW near-threshold 187.5–500 kHz programmable clock generator for ultra low power SoCs,” in SOI-3D-Subthreshold Microelectronics Technology Unified Conference (S3S), 2015 IEEE , vol., no., pp.1-3, 5-8 Oct. 2015. [paper]
50. H. Kim, G. Kim, Y. Lee, Z. Foo, D. Sylvester, D. Blaauw, D. Wentzloff, “A 10.6mm3 fully-integrated, wireless sensor node with 8GHz UWB transmitter,” in Symp. VLSI Circuits Dig. Tech. Papers, vol., no., pp.C202-C203, June 2015.
51. N. E. Roberts, K Craig, A. Shrivastava, S. N. Wooters, Y. Shakhsheer, B. H. Calhoun, D. D. Wentzloff “A 236nW -56.5dBm Sensitivity Bluetooth Low-Energy Wakeup Receiver with Energy Harvesting in 65nm CMOS,” IEEE International Solid-State Circuits Conference (ISSCC), Feb. 2016.
52. Benton Calhoun, David Wentzloff, “Ultra-low power wireless SoCs enabling a batteryless IoT,” IEEE Hot Chips 27 Symposium, 2015
53. N. E. Roberts, M. C. Kines, D. D. Wentzloff, “A 380µW Rx, 2.6mW Tx 433MHz FSK Transceiver with a 102dB Link Budget and Bit-Level Duty Cycling,” IEEE Radio Frequency Integrated Circuits Symposium (RFIC), June 2015.
54. H. Kim, G. Kim, Y. Lee, Z. Foo, D. Sylvester, D. Blaauw, D. D. Wentzloff, “A 10.6mm^3 fully-integrated, wireless sensor node with 8GHz UWB transmitter,” IEEE Symposium on VLSI Circuits, 2015.
55. A. Shrivastava, K. Craig, N. E. Roberts, D. D. Wentzloff, B. H. Calhoun, “A 32nW bandgap reference voltage operational from 0.5V supply for ultra-low power systems,” IEEE International Solid-State Circuits Conference (ISSCC), Feb. 2015.
56. A. Klinefelter, N. E. Roberts, Y. Shakhsheer, P. Gonzalez, A. Shrivastava, A. Roy, K. Craig, M. Faisal, J. Boley, S. Oh, Y. Zhang, D. Akella, D. D. Wentzloff, B. H. Calhoun, “A 6.45µW self-powered IoT SoC with integrated energy-harvesting power management and ULP asymmetric radios,” IEEE International Solid-State Circuits Conference (ISSCC), Feb. 2015.
57. E. Ansari, D. D. Wentzloff, "A 5mW 250MS/s 12-bit Synthesized Digital to Analog Converter," IEEE Custom Integrated Circuits Conference (CICC), Sept. 2014, pp. 1-4.
58. A. Shrivastava, D. D. Wentzloff, B. H. Calhoun, “A 10mV-input boost converter with inductor peak current control and zero detection for thermoelectric energy harvesting,” IEEE Custom Integrated Circuits Conference (CICC), Sept. 2014.
59. S. Oh, N. E. Roberts, D. D. Wentzloff, "A 116nW multi-band wake-up receiver with 31-bit correlator and interference rejection," IEEE Custom Integrated Circuits Conference (CICC), Sept. 2013, pp 1-4.
60. H. Kim, D. D. Wentzloff, "An embedded on-body planar antenna using a low profile EBG structure," IEEE Antennas and Propagation Society International Symposium (APSURSI), July 2013, pp. 616-617.

61. M. Faisal, D. D. Wentzloff, "An Automatically Placed-and-Routed ADPLL for the MedRadio Band using PWM to Enhance DCO Resolution," IEEE Radio Frequency Integrated Circuits Symposium (RFIC), June 2013, pp. 115-118.
62. J. K. Brown, K.-K. Huang, E. Ansari, R. R. Rogel, Y. Lee, D. D. Wentzloff, "An ultra-low-power 9.8GHz crystal-less UWB transceiver with digital baseband integrated in 0.18µm BiCMOS" IEEE International Solid-State Circuits Conference (ISSCC), Feb. 2013, pp. 442-443.
63. O. U. Khan, D. D. Wentzloff, "1.2 GS/s Hadamard Transform Front-End For Compressive Sensing in 65nm CMOS," IEEE Radio Wireless Week, Jan. 2013.
64. D. Y. Lee, D. D. Wentzloff, and J. P. Hayes, "Wireless Wafer Probing for On-Chip Analog Voltage Measurement," IEEE Asian Solid-State Circuits Conference (A-SSCC), Nov. 2012.
65. N. E. Roberts, D. D. Wentzloff, "A 915MHz Ultra Low Power Receiver using Sub-Vt Active Rectifiers," IEEE Subthreshold Microelectronics Conference, Oct. 2012.
66. S. Han, D. D. Wentzloff, "0.61W/mm2 Resonant Inductively Coupled Power Transfer for 3D-ICs," IEEE Custom Integrated Circuits Conference (CICC), Sep. 2012.
67. S. Han, D. D. Wentzloff, "In-Phase Resonant Inductive Coupling for Multi-Layer Vertical Communication in 3D-ICs," IEEE International Symposium on Antennas and Propagation (AP-S), Jul. 2012.
68. K.-K. Huang, D. D. Wentzloff, "60GHz Wire-Bond Helical Antennas in 130nm CMOS Technology," IEEE International Symposium on Antennas and Propagation (AP-S), Jul. 2012.
69. S. Oh, D. D. Wentzloff, "A -32dBm Sensitivity RF Power Harvester in 130nm CMOS," IEEE Radio Frequency Integrated Circuits Symposium (RFIC), June 2012, pp. 483-486.
70. N. E. Roberts, D. D. Wentzloff, "A 98nW Wake-up Radio for Wireless Body Area Networks," IEEE Radio Frequency Integrated Circuits Symposium (RFIC), June 2012, pp. 373-376.
71. M. Flaska, G. Chaud, J. D. Linkous, M. Faisal, D. D. Wentzloff, S. A. Pozzi, "Investigation of Waveform Digitizers for High-Performance, Pulse-Shape Discrimination Systems Based on Organic Liquid Scintillators," IEEE Symposium on Radiation Measurements and Applications (SORMA), May 2012.
72. R. T. Schiffer, M. J. Haling, M. Faisal, M. Flaska, S. A. Pozzi, D. D. Wentzloff, "A Real-Time, Pulse-Shape Discrimination and Data Processing System for Organic Liquid Scintillators," IEEE Symposium on Radiation Measurements and Applications (SORMA), May 2012.
73. M. Faisal, R. T. Schiffer, M. Flaska, S. A. Pozzi, D. D. Wentzloff, "A Correlation-Based Timing Technique to Achieve Sub-Sample Timing Resolution in Nuclear Particle Detection Systems," IEEE Symposium on Radiation Measurements and Applications (SORMA), May 2012.
74. S. Oh, D. D. Wentzloff, "Portable hardware for real-time channel estimation on wireless body area networks," IEEE Biomedical Circuits and Systems Conference (BioCAS), Nov. 2011, pp. 233-236.
75. Y. Park, D. D. Wentzloff, "An All-Digital PLL Synthesized from a Digital Standard Cell Library in 65nm CMOS," IEEE Custom Integrated Circuits Conference (CICC), Sep. 2011, pp 1-4.
76. S. Oh, D. D. Wentzloff, "A Step Recovery Diode Based UWB Transmitter for Low-Cost Impulse Generation," IEEE International Conference on Ultra-Wideband (ICUWB), Sep. 2011.
77. D. Y. Lee, D. D. Wentzloff, J. P. Hayes, "Wireless Wafer-Level Testing of Integrated Circuits via Capacitively-Coupled Channels," IEEE International Symposium on Design and Diagnostics of Electronic Circuits & Systems (DDECS), April 2011, pp. 99-104.
78. J. K. Brown, D. D. Wentzloff, "A 1900MHz-Band GSM-Based Clock-Harvesting Receiver with -87dBm Sensitivity," IEEE Radio Frequency Integrated Circuits Symposium (RFIC), June 2011.
79. M. Faisal, Y. Park, D. D. Wentzloff, "Reconfigurable Firmware-Defined Radios Synthesized from Standard Digital Logic Cells," SPIE Defense, Security, and Sensing Conference, Apr. 2011.

80. J. M. Almodovar-Faria, J. McNair, D. D. Wentzloff, "Optimal Receiver Bandwidth for Energy-Detection PPM UWB Systems," IEEE Wireless Communications and Networking Conference, Mar. 2011, pp. 1700-1705.
81. K.-K. Huang, D. D. Wentzloff, "a 60GHz antenna-Referenced Frequency-locked loop in 0.13µm CMOS for Wireless Sensor Networks," IEEE International Solid State Circuits Conference (ISSCC), Feb. 2011
82. S. Han, D. D. Wentzloff, "Wireless Power Transfer Using Resonant Inductive Coupling for 3D Integrated ICs," IEEE International 3D System Integration Conference (3DIC), Nov. 2010.
83. Y. Park, D. D. Wentzloff, "An All-Digital 12pJ/pulse 3.1-6.0GHz IR-UWB Transmitter in 65nm CMOS," IEEE International Conference on Ultra-Wideband, Sep. 2010.
84. K.-K. Huang, D. D. Wentzloff, "60GHz On-Chip Patch Antenna Integration in a 0.13-um CMOS Technology," IEEE International Conference on Ultra-Wideband (ICUWB), Sep. 2010.
85. S. Han, D. D. Wentzloff, "Performance Improvement of Resonant Inductive Coupling for Wireless 3D IC Interconnect," IEEE International Symposium on Antennas and Propagation (AP-S), Jul. 2010.
86. Y. Park, D. D. Wentzloff, "A Cyclic Vernier Time-to-Digital Converter Synthesized from a 65nm CMOS Standard Library," IEEE International Symposium on Circuits and Systems (ISCAS), June 2010, pp. 3561-3564.
87. Y. Park, D. D. Wentzloff, "IR-UWB Transmitters Synthesized from Standard Digital Library Components," IEEE International Symposium on Circuits and Systems (ISCAS), June 2010, pp. 3296-3299.
88. J. K. Brown, D. D. Wentzloff, "Harvesting a Clock from a GSM Signal for the Wake-Up of a Wireless Sensor Network," IEEE International Symposium on Circuits and Systems (ISCAS), June 2010, pp. 1500-1503.
89. J. R. Fernandes, D. D. Wentzloff, "Recent Advances in IR-UWB Transceivers: An Overview," IEEE International Symposium on Circuits and Systems (ISCAS), June 2010, pp. 3284-3287.
90. M. Faisal, R. T. Shiffer, M. Flaska, S. A. Pozzi, D. D. Wentzloff, "A Correlation Based Pulse Detection Technique for Gamma/Neutron Detectors," Symposium on Radiation Measurements and Applications (SORMA), May 2010.
91. R. Schiffer, S. Carney, M. Flaska, S. A. Pozzi, D. D. Wentzloff, "A Scalable FPGA-Based Digitizing Platform for Radiation Data Acquisition," Symposium on Radiation Measurements and Applications (SORMA), May 2010.
92. M. Faisal, R. T. Schiffer, M. Flaska, S. A. Pozzi, D. D. Wentzloff, "A Correlation Based Pulse Detection Technique for Liquid Scintillation Detectors," Institute of Nuclear Materials Management Annual Meeting (INMM), June 2010.
93. Y. Park, D.D. Wentzloff, "All-digital synthesizable UWB transmitter architectures," IEEE International Conference on Ultra-Wideband (ICUWB), Sep. 2008, pp. 29-32.
94. D. D. Wentzloff, F. S. Lee, D. C. Daly, M. Bhardwaj, P. P. Mercier, A. P. Chandrakasan, "Energy Efficient Pulsed-UWB CMOS Circuits and Systems," (invited) IEEE International Conference on Ultra-Wideband (ICUWB), Sep. 2007, pp. 282-287.
95. D. D. Wentzloff, A. P. Chandrakasan, "Delay-Based BPSK for Pulsed-UWB Communication," IEEE International Conference on Speech, Acoustics, and Signal Processing (ICASP), Apr. 2007, pp. 561-564.
96. D. D. Wentzloff, A. P. Chandrakasan, "A 47pJ/pulse 3.1-to-5GHz All-Digital UWB Transmitter in 90nm CMOS," IEEE International Solid-State Circuits Conference (ISSCC), Feb. 2007, pp. 118-119.

97. F. S. Lee, R. Blazquez, B. P. Ginsburg, J. D. Powell, M. Scharfstein, D. D. Wentzloff, A. P. Chandrakasan, "A 3.1 to 10.6 GHz 100 Mb/s Pulse-Based Ultra-Wideband Radio Receiver Chipset," IEEE International Conference on Ultra-Wideband (ICUWB), Sep. 2006, pp. 185-190.
98. A. Wang, T. Cardanha, D. D. Wentzloff, "Development and Implementation of a Powertrain Electrical System Simulator with Computer-Controlled Fault Generation," Society of Automotive Engineers World Congress, Apr. 2006.
99. D. D. Wentzloff, A. P. Chandrakasan, "A 3.1-10.6 GHz Ultra-Wideband Pulse-Shaping Mixer," IEEE Radio Frequency Integrated Circuits Symposium (RFIC), June 2005, pp. 83-86.
100. N. Checka, D. D. Wentzloff, A. P. Chandrakasan, R. Reif, "The Effect of Substrate Noise on VCO Performance," IEEE Radio Frequency Integrated Circuits Symposium (RFIC), June 2005, pp. 523-526.
101. R. Blazquez, F. S. Lee, D. D. Wentzloff, B. Ginsburg, J. Powell, A. P. Chandrakasan, "Direct Conversion Pulsed UWB Transceiver Architecture," Design, Automation and Test in Europe (DATE), Mar. 2005, pp. 94-95.
102. F. S. Lee, D. D. Wentzloff, A. P. Chandrakasan, "An Ultra-Wideband Baseband Front-End", IEEE Radio Frequency Integrated Circuits Symposium (RFIC), June 2004, pp. 493-496.
103. D. D. Wentzloff, B. H. Calhoun, R. Min, A. Wang, N. Ickes, A. P. Chandrakasan, "Design Considerations for Next Generation Wireless Power-Aware Microsensor Nodes," Proc. 17th International Conference on VLSI Design, Jan. 2004, pp. 361-367.
104. R. Blazquez, F. S. Lee, D. D. Wentzloff, P. P. Newaskar, J. D. Powell, A. P. Chandrakasan, "Digital architecture for an ultra-wideband radio receiver", Vehicular Technology Conference (VTC), Oct. 2003, pp. 1303-1307.
105. E. C. Lovelace, T. M. Jahns, J. Wai, T. Keim, J. H. Lang, D. D. Wentzloff, F. Leonardi, J. M. Miller, P. J. McCleer, "Design and Experimental Verification of a Direct-Drive Interior PM Synchronous Machine Using a Saturable Lumped-Parameter Model," 37th IAS Annual Meeting, vol. 4, Oct. 2002, pp. 2486-2492.

Book Chapters

1. Chen X., Wentzloff D.D., "Design Considerations of Frequency Modulated Ultralow Power Transmitter," In: Sawan M. (eds) Handbook of Biochips. 2021, Springer, New York, NY
2. P. P. Mercier, D. C. Daly , F. S. Lee, D. D. Wentzloff, A. P. Chandrakasan, "Pulsed Ultra-Wideband Transceivers," in Ultra-Low-Power Short-Range Radios, editors P. P. Mercier, A. P. Chandrakasan, 2015 Springer, pp 233-280.
3. K. K. Huang, D. D. Wentzloff, "Low-Power 60-GHz CMOS Radios for Miniature Wireless Sensor Network Applications," in Ultra-Wideband and 60 GHz Communications for Biomedical Applications, editor Mehmet R. Yuce, 2014 Springer
4. F.S. Lee, R. Blazquez, B.P. Ginsburg, J.D. Powell, D.D. Wentzloff, A.P. Chandrakasan, "Pulse-Based, 100 Mbps UWB Transceiver," Ultra Wideband, edited by R. Gharpurey, P. Kinget, Springer, pp. 121-152 (2008).
5. N. E. Roberts, D. D. Wentzloff, "Ultra-Low-Power Short-Range Radios," in Integrated Circuits and Systems, editor Patrick P. Mercier and Anantha P. Chandrakasan, Springer (2015)

PATENTS

Granted

1. "Systems And Methods For A Crystal-Less Bluetooth Low Energy Transceiver," Patent number 10,992,503, issued on April 27, 2021

2. “Millimeter-Scale Bluetooth Low Energy Transmitter With Dual Purpose Loop Antenna,” Patent number 10,911,078, issued on February 2, 2021
3. “Ring oscillator based all-digital Bluetooth low energy transmitter,” Patent number 10,567,154 on February 18, 2020
4. “Millimeter-Scale Bluetooth Low Energy Transmitter With Dual Purpose Loop Antenna,” Patent number 10,911,078, February 2, 2021
5. “Low-Power Receiver for FSK Back-Channel Embedded in 5.8 GZ WI-FI OFDM Packets,” Patent number 10541843, January 21, 2020
6. “Low Power High Gain Radio Frequency Amplifier For Sensor Apparatus,” Patent number 15/887,212, June 13, 2019
7. “Low Power High Gain Radio Frequency Amplifier For Sensor Apparatus,” Patent number 10447318, October 15, 2019
8. “A Mixer-Last Architecture for High Efficiency Transmitters,” Patent number US10200232, issued February 5, 2019
9. “Ultra-low-power radio for short-range communication,” Patent number 6196299, issued August 25, 2017
10. “Integrated ultra wideband transceiver,” Patent number US 9,681,389, issued June 13, 2017
11. “Ultra-low power long range transceiver,” Patent number US 9,667,294, issued May 30, 2017
12. “Dual-loop programmable and dividerless clock generator for ultra low power applications,” Patent number US 9,641,183, issued May 2, 2017
13. “Automatically placed and routed ADPLL with PWM-based DCO resolution enhancement,” Patent number US 9,515,668, issued December 6, 2016
14. “Short-range zigbee compatible receiver with near-threshold digital baseband,” Patent number US 9,444,515, issued September 2016
15. “Low power wireless communication utilizing OFDM backchannels,” Patent number US 9,419,838, issued August 16, 2016
16. “Wake-up receiver with automatic interference rejection,” Patent number US 9,413,403, issued August 9, 2016
17. “Ultra low power sensing platform with multimodal radios,” Patent number US 20,150,303,975, issued October 22, 2015
18. “Methods and apparatus for low input voltage bandgap reference architecture and circuits,” issued October 15, 2015
19. “Ultra-low-power radio for short-range communication,” Patent number US 9,020,456, issued April 28, 2015

Pending

1. “Dual Chirp Modulation Scheme”
2. “Wake-Up Receiver For Narrowband IoT Applications”
3. “Systems And Methods For A Crystal-Less Bluetooth Low Energy Transceiver”
4. “Ultra Low Power Sensing Platform with Multimodal Radios,”
5. “Low Power High Gain Radio Frequency Amplifier For Sensor Apparatus.”
6. “Quadrature Fully-Integrated Tri-Band GPS Receiver.”
7. “Digital Quadrature Transmitter With Class-B I/Q Cell Sharing.”

8. “A Low Power High Gain RF Amplifier Technique.”
9. “Low-Power Receiver for FSK Back-Channel Embedded in 5.8GHz Wi-Fi OFDM Packets.”
10. “A 12.1mW Quadrature Fully-Integrated Tri-Band GPS Receiver in 65nm CMOS.”
11. “A Mixer-Last Architecture for High Efficiency Transmitters.”

EXHIBIT B

Rebuttal Expert Report of Dr. Wentzloff
List of Materials Considered

Description	
All documents cited within the Rebuttal Expert Report of Dr. Wentzloff	
Wentzloff Opening Report	
Wentzloff Supplemental Report	
Dr. Ricketts Opening Report and all exhibits	
Respondents' Invalidity Contentions, Oct. 22, 2024	
Respondents' Second Amended Invalidity Contentions, February 19, 2025	
Respondents' Non-Burden Contentions, Feb. 19, 2025	
Complainants' Supplemental Infringment Claim Chart and Exhibits Cited Therein ('563 Patent), Feb. 13, 2025	
Complainants' Supplemental Infringment Claim Chart and Exhibits Cited Therein ('101 Patent), Feb. 13, 2025	
Complainants' Supplemental Domestic Industry Claim Chart and Exhibits Cited Therein ('563 Patent), Feb. 6, 2025	
Complainants' Supplemental Domestic Industry Claim Chart and Exhibits Cited Therein ('101 Patent), Feb. 6, 2025	
Complainants' Supplemental Infringement Claim Chart and Exhibits Cited Therein ('563 Patent), Feb. 19, 2025	
Complainants' Supplemental Infringement Claim Chart and Exhibits Cited Therein ('101 Patent), Feb. 19, 2025	
Respondents' Markman Brief, Declarations, and Exhibits	
Complainants' Markman Brief, Declarations, and Exhibits	
Joint Markman Exhibits, JXM-0004 and JXM-005	
Joint Claim Construction Chart	
[redacted]	
[redacted]	
[redacted]	
[redacted]	
[redacted]	
[redacted]	
[redacted]	
2025-02-24 KCT's Amended Non-Burden Contentions (ITC KCT) (Tech DI)	
2025-02-24 KCT's Second Amended Non-Burden Contentions (Non-DI)	
2025-02-19 KCT's Amended Non-Burden Contentions (Non-DI)	
2025-02-19 Complainants' Domestic Industry Contentions (CBI)	
2025-02-19 Exhibit C-'101 Suppl Infringement Claim Chart KCT8525C (CBI)	
2025-02-19 Exhibit D-'563 Suppl Infringement Claim Chart KCT8525C (CBI)	
2025-02-13 '101 Suppl Infringement Claim Chart KCT8539S (CBI)	
2025-02-13 '563 Suppl Infringement Claim Chart KCT8539S (CBI)	
2025-02-12 Skyworks Second Supplemental Non-Burden Contention Rog Responses (CBI)	
2025-02-06 Exhibit J (Supplemental '101 DI Claim Chart) (CBI)	
2025-02-06 Exhibit K (Supplemental '563 DI Claim Chart) (CBI)	
2025-02-19 Complainants' Fourth Suppl Responses to First Set of ROGs (Nos. 1-21) (CBI)	
2025-02-17 Ruijie Further Amended 5th Suppl. Resp. to Skyworks First Rogs (No. 7) (CBI)	
2025-02-12 Ruijie Amended 5th Suppl. Resps. to Skyworks 1st ROGs (CBI)	
2025-02-07 Ruijie 5th Suppl. Resps. to Skyworks 1st ROGs (CBI)	
2025-01-26 KCT's Suppl Responses to Complainants' Rogs (Nos. 1, 3, 5-6, 8-12, 16, 22, 24, 27-28, 51, 55, 58, 82, 85, 103, 105-106, 111, 119)	
2024-12-19 KCT and Grand Chip Supp. Responses to Skyworks' Third ROG (No. 104) (CBI)	
2024-12-16 D-Link Third Supp. Obj. and Resp. to Skyworks 1st ROG (1-69) (CBI) 4906-0030-4135 v.1	
2024-09-16 D-Link's Obj. and Resp. to Skyworks' 1st ROG (Nos. 1-69) and attachments A-B (CBI)	
2025-01-02 KCT and Grand Chip Responses and Objections to Skyworks' First Set of RFA (Nos. 1-9)	
Description	**Bates**
U.S. Patent No. 8,717,101 and its file history	

Description	
U.S. Patent No. 9,917,563 and its file history	
JP2005-027130 Morisawa	KCT_ITC_0171694- KCT_ITC_0171727
US20050140457A1 Bellantoni	KCT_ITC_0172456- KCT_ITC_0172497
US20090212863A1 Ishimaru	KCT_ITC_0172741- KCT_ITC_0172747
JP2009200770A (Ishimaru JP)	
JP2009200770A (Ishimaru JP google translate)	
U.S. Patent No. 8,692,619 to Wakita	
Toumazou, Analogue IC Design - The Current-Mode Approach	KCT_ITC_0172291- KCT_ITC_0172402
Gilbert (same textbook chapter as Ex. 1011 of the Ricketts Opening Report), Bipolar Current Mirrors	
Roland E. Thomas et al., "The Analysis & Design of Linear Circuits" (7th ed. 2012)	
Behzad Razavi, "Design of analog CMOS integrated circuits," (2nd edition)	
Mohammed Ayad et al., "Single and dual input packaged 5.5–6.5GHz, 20W, Quasi-MMIC GaN-HEMT Doherty Power Amplifier," (2017 IEEE MTT-S International Microwave Symposium)	
V. Vassilev et al., "Integrated front-ends up to 200 GHz," (2011 IEEE MTT-S International Microwave Workshop Series on Millimeter Wave Integration Technologies)	
S. Mohammadi and C. R. Selvakumar, Analysis of BJT's, pseudo-HBT's, and HBT's by including the effect of neutral base recombination, (IEEE Transactions on Electron Devices, vol. 41, no. 10, pp. 1708-1715, Oct. 1994)	
Sang-Woong Yoon and Chang-Woo Kim, 2.4 GHz WLAN InGaP/GaAs Power Amplifier with Temperature Compensation Technique	
Sang-Woong Yoon, Static and Dynamic Error Vector Magnitude Behavior of 2.4-GHz Power Amplifier	
Skyworks sales data	KCT-ITC_000011177
[redacted]	[redacted]
[redacted]	[redacted]
[redacted]	[redacted]
[redacted]	[redacted]
[redacted]	[redacted]
[redacted]	[redacted]
[redacted]	[redacted]
[redacted]	[redacted]
[redacted]	[redacted]
[redacted]	[redacted]
High-power FEMs for ultra-fast Wi-Fi 6E applications	Skyworks_ITC_000110938- Skyworks_ITC_000110939
RFMD, Design Application Note	Skyworks_ITC_000110940- Skyworks_ITC_000110946
High power front-end modules for Wi-Fi 6 applications from Skywork	Skyworks_ITC_000110947- Skyworks_ITC_000110948
[redacted]	[redacted]
[redacted]	[redacted]

Description	
[redacted]	[redacted]
[redacted]	[redacted]
[redacted]	[redacted]
[redacted]	[redacted]
[redacted]	[redacted]
[redacted]	[redacted]
[redacted]	[redacted]
[redacted]	[redacted]
[redacted]	[redacted]
[redacted]	[redacted]
[redacted]	[redacted]
[redacted]	[redacted]
[redacted]	[redacted]
[redacted]	[redacted]
[redacted]	[redacted]
[redacted]	[redacted]
[redacted]	[redacted]
[redacted]	[redacted]
[redacted]	[redacted]
[redacted]	[redacted]
[redacted]	[redacted]
[redacted]	[redacted]
[redacted]	[redacted]
[redacted]	[redacted]
[redacted]	[redacted]
[redacted]	[redacted]
[redacted]	[redacted]
[redacted]	[redacted]
[redacted]	[redacted]

Description	
[redacted]	[redacted]
[redacted]	[redacted]
[redacted]	[redacted]
[redacted]	[redacted]
[redacted]	[redacted]
[redacted]	[redacted]
[redacted]	[redacted]
[redacted]	[redacted]
Email from Recker to Konganti	COM-ITC-000042- COM-ITC-000046
Skyworks Solutions, Inc. SWKS	Skyworks_ITC_000018682
RFMD rf5632 Data Sheet	
Microchip SST11CP16	
ADI HMC7748 Data Sheet	
Infineon-BCR400W-DataSheet	