US008109355B2

(12) **United States Patent**
Iwaki et al.

(10) **Patent No.: US 8,109,355 B2**
(45) **Date of Patent: Feb. 7, 2012**

(54) **HYDROSTATIC TRANSAXLE AND HYDRAULICALLY DRIVEN VEHICLE**

(75) Inventors: **Koji Iwaki**, Hyogo (JP); **Norihiro Ishii**, Hyogo (JP); **Fumitoshi Ishino**, Hyogo (JP)

(73) Assignee: **Kanzaki Kokyukoki Mfg. Co., Ltd.**, Hyogo (JP)

(*) Notice: Subject to any disclaimer, the term of this patent is extended or adjusted under 35 U.S.C. 154(b) by 0 days.

(21) Appl. No.: **12/536,192**

(22) Filed: **Aug. 5, 2009**

(65) **Prior Publication Data**

US 2009/0288901 A1 Nov. 26, 2009

Related U.S. Application Data

(63) Continuation of application No. 11/214,056, filed on Aug. 30, 2005, now Pat. No. 7,588,103.

(30) **Foreign Application Priority Data**

Sep. 2, 2004 (JP) 2004-256186
Jan. 31, 2005 (JP) 2005-23438

(51) **Int. Cl.**
B60K 17/356 (2006.01)

(52) **U.S. Cl.** **180/243**; 180/305; 56/14.7; 56/202

(58) **Field of Classification Search** 180/242, 180/243, 6.3, 6.24, 6.32, 6.48, 305, 306, 180/307, 308; 56/14.7, 202
See application file for complete search history.

(56) **References Cited**

U.S. PATENT DOCUMENTS

3,690,398 A 9/1972 Hause
4,140,196 A 2/1979 Brewer
5,117,936 A 6/1992 Nakamura et al.
5,159,992 A 11/1992 Reinecke et al.
6,119,802 A 9/2000 Puett, Jr.
6,135,231 A 10/2000 Reed
6,390,227 B1 * 5/2002 Abend et al. 180/375
6,619,038 B2 9/2003 Takada et al.

(Continued)

FOREIGN PATENT DOCUMENTS

EP 0 573 844 12/1993

(Continued)

OTHER PUBLICATIONS

European Search Report for counterpart European Application No. EP 05 10 7846, European Patent Office, Berlin, dated Feb. 7, 2006, 13 pages.

(Continued)

Primary Examiner — Anne Marie M Boehler
(74) *Attorney, Agent, or Firm* — Sterne, Kessler, Goldstein & Fox, P.L.L.C.

(57) **ABSTRACT**

A hydraulically driven vehicle comprises: a first transaxle disposed at one of front and rear portions of the vehicle, wherein the first transaxle incorporates a first hydraulic motor for driving a first axle; a second transaxle disposed at the other of the rear or front portion of the vehicle, wherein the second transaxle incorporates a second hydraulic motor for driving a second axle; a hydraulic pump for supplying fluid to the first and second hydraulic motors; a mower; a duct for transferring grass mowed by the mower, wherein the first transaxle is disposed above the duct; and a vertical power train interposed between the first axle and an axial center shaft of a wheel driven by the first axle, wherein the power train is disposed on a lateral outside of the duct.

12 Claims, 23 Drawing Sheets

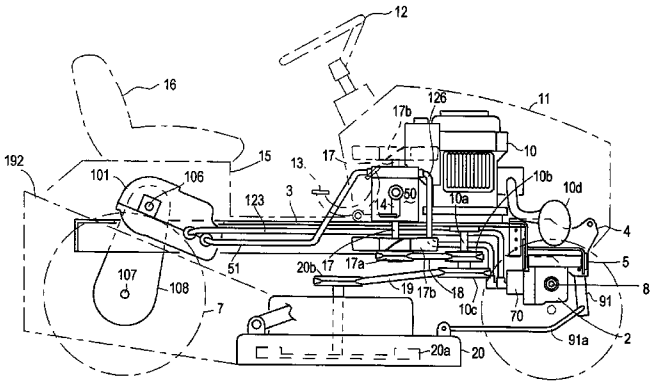

U.S. PATENT DOCUMENTS

6,807,809	B2	10/2004	Schuh	
6,845,837	B2	1/2005	Ohashi et al.	
6,926,111	B1 *	8/2005	Irikura	180/234
7,047,715	B2 *	5/2006	Suhara et al.	56/16.6
7,356,992	B2	4/2008	Ivantysynova et al.	
7,503,161	B1 *	3/2009	Mizukawa et al.	56/14.7
7,588,103	B2	9/2009	Iwaki et al.	
2003/0182914	A1	10/2003	Shibata et al.	
2004/0112027	A1 *	6/2004	Komorida et al.	56/202
2004/0134704	A1	7/2004	Okada et al.	
2005/0121249	A1	6/2005	Iwaki et al.	
2006/0278459	A1	12/2006	Iwaki et al.	

FOREIGN PATENT DOCUMENTS

EP	0 916 541	5/1999
FR	2 797 375	2/2001
JP	H02-91024	7/1990
JP	H02-109759	9/1990
JP	06-183274	7/1994
JP	07-156675	6/1995
JP	11 034676	2/1999
JP	2000-001127	1/2000
JP	2000-108699	4/2000
JP	2000-300036	10/2000
JP	2002-295639	10/2002
JP	2003-079203	3/2003
JP	2003-180114	7/2003
JP	2004-210215	4/2004
JP	2005/035402	2/2005
WO	WO 01/38119	5/2001
WO	WO 2004/062956	7/2004

OTHER PUBLICATIONS

Notification of Reasons for Refusal for JP Application No. JP 2005-023438, mailed Dec. 21, 2010, 8 pages.

* cited by examiner

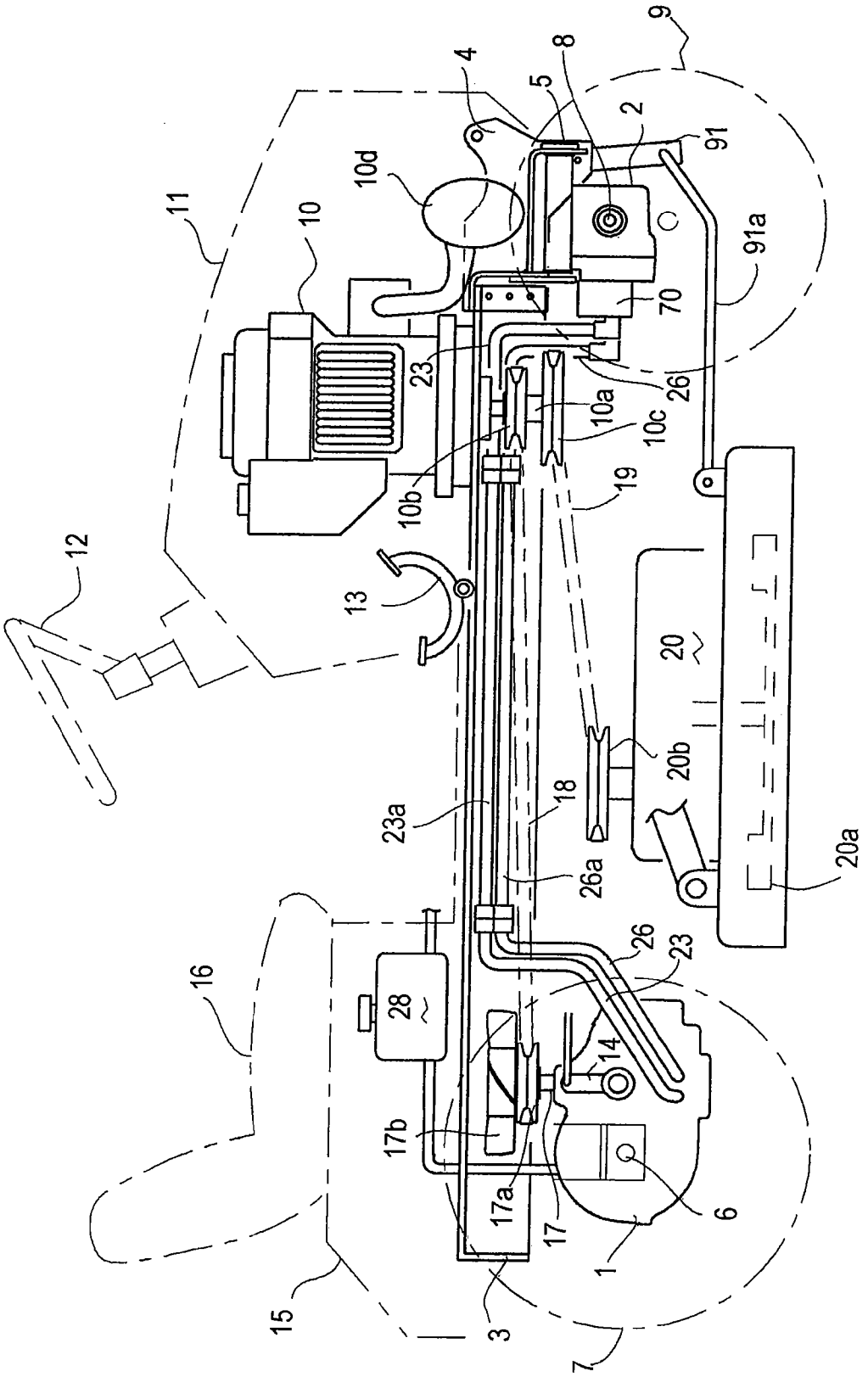
9
8
5
4
2
91
91a
10d
11
10
70
23
26
10a
10c
10b
19
12
13
20
20b
18
23a
26a
20a
26
23
16
28
14
17b
17a
17
6
1
15
3
7

Fig. 1

Fig. 2

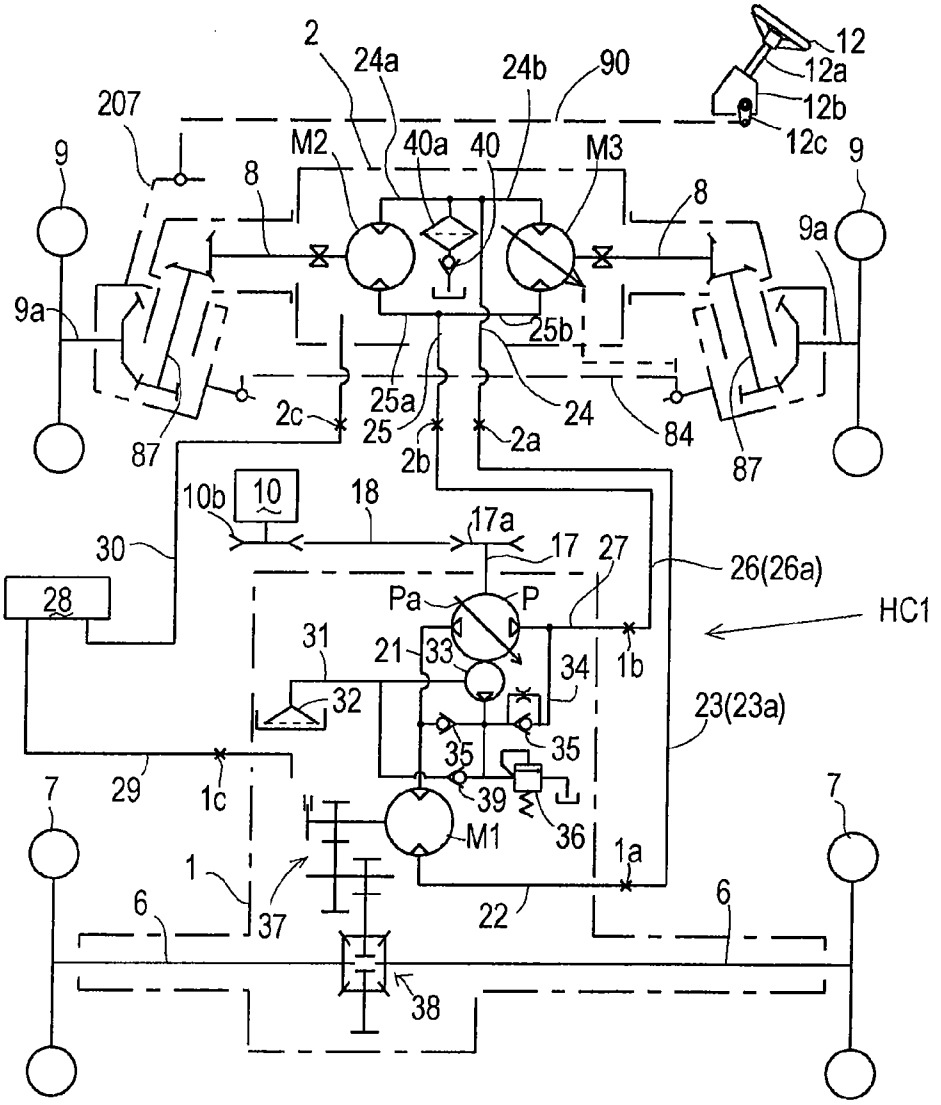
2
24a
24b
90
12
12a
12b
12c
207
9
M2
40a
40
M3
9
8
8
9a
9a
25b
25a
24
2c
25
2b
2a
84
87
87
10b
10
18
17a
17
27
26(26a)
30
28
Pa
P
HC1
31
21
33
34
1b
32
23(23a)
35
35
29
1c
39
36
7
7
M1
1a
1
37
22
6
6
38

Fig. 3

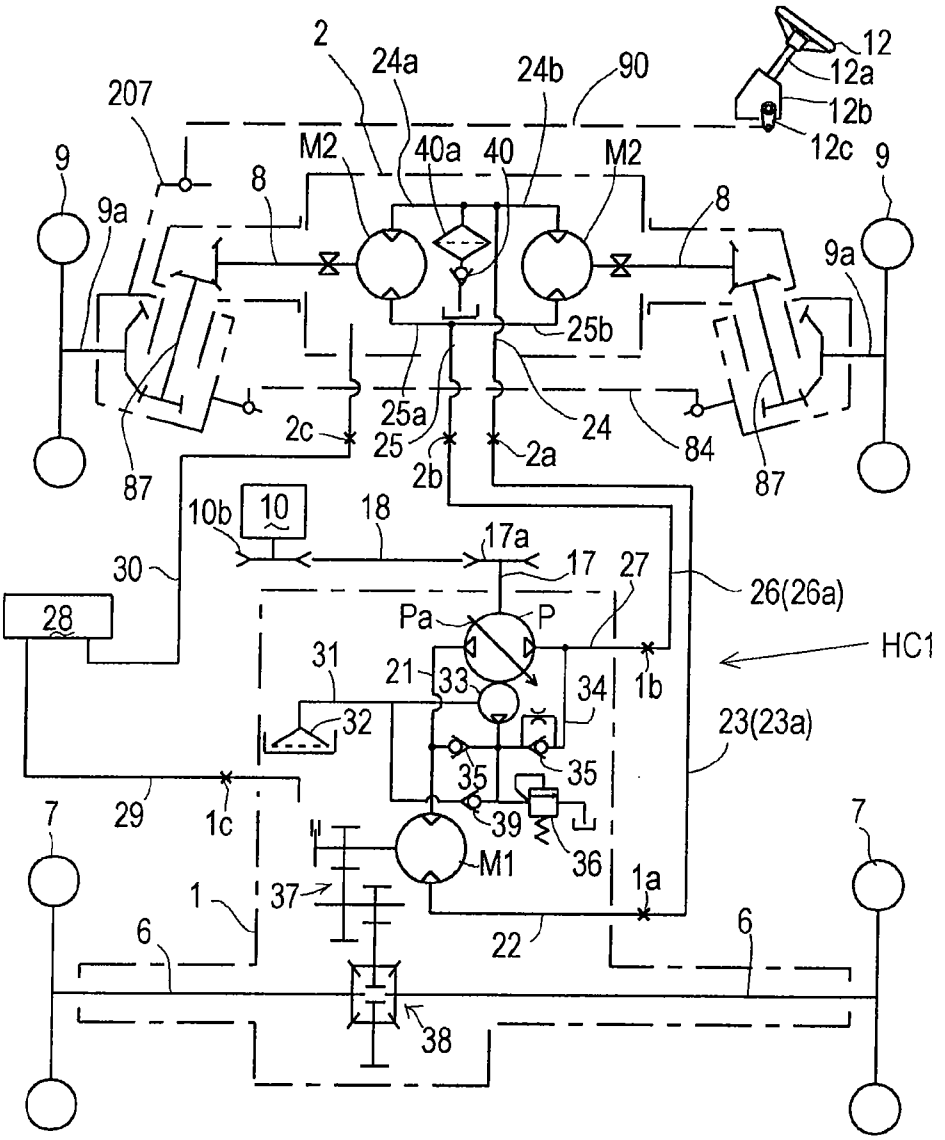
2
24a
24b
90
12
12a
12b
12c
207
9
9a
8
M2
40a
40
M2
8
9
9a
25b
25a
24
2c
25
2b
2a
84
87
87
10b
10
18
17a
17
27
26(26a)
30
28
Pa
P
HC1
31
21
33
34
1b
32
23(23a)
35
35
29
1c
39
36
7
7
M1
1a
1
37
22
6
6
38

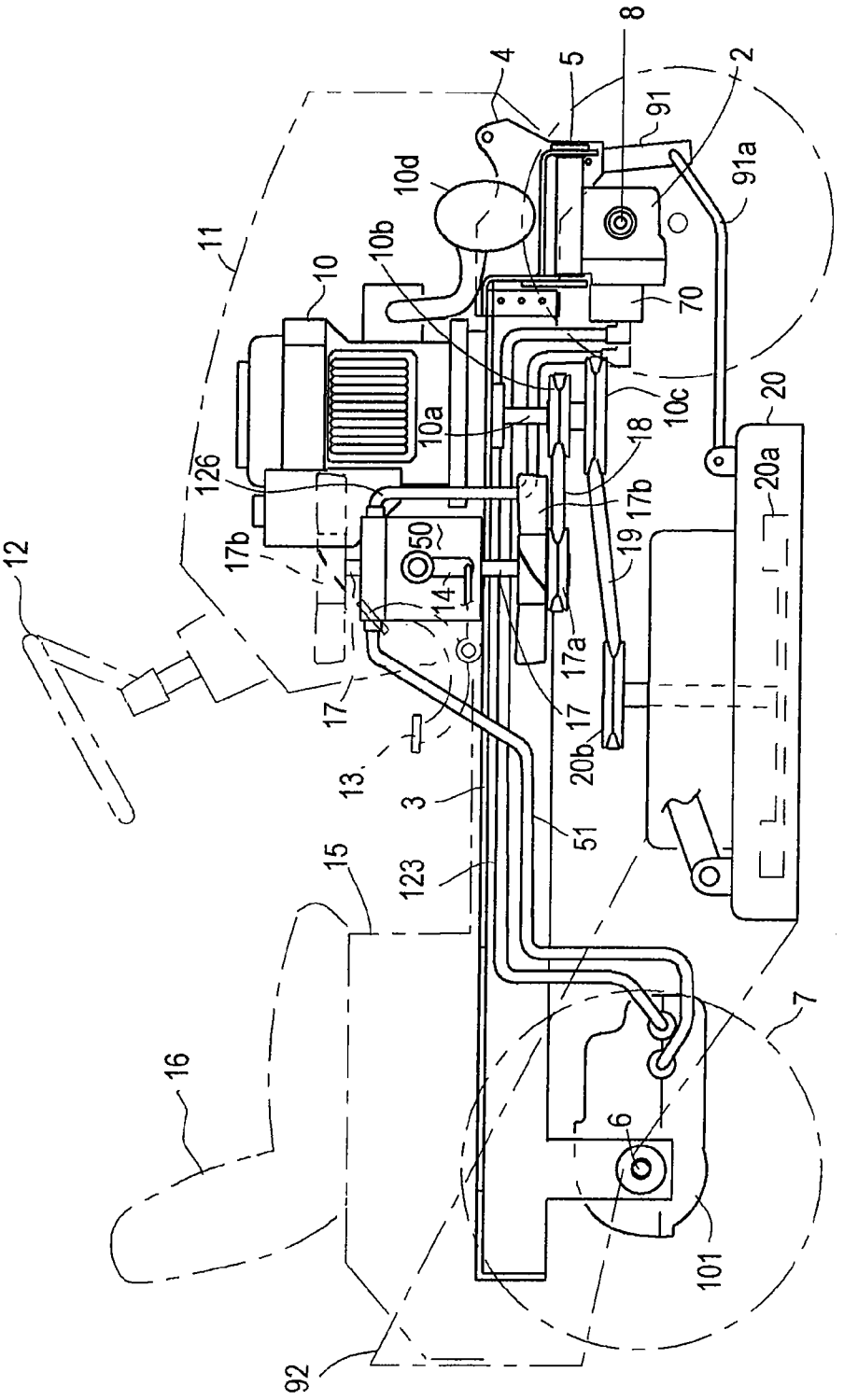
8
4
5
2
91
91a
10d
11
10b
10
70
10c
20
10a
18
126
17b
20a
12
50
19
14
17a
17
20b
13
3
51
15
123
7
16
6
101
92

Fig. 4

Fig. 5

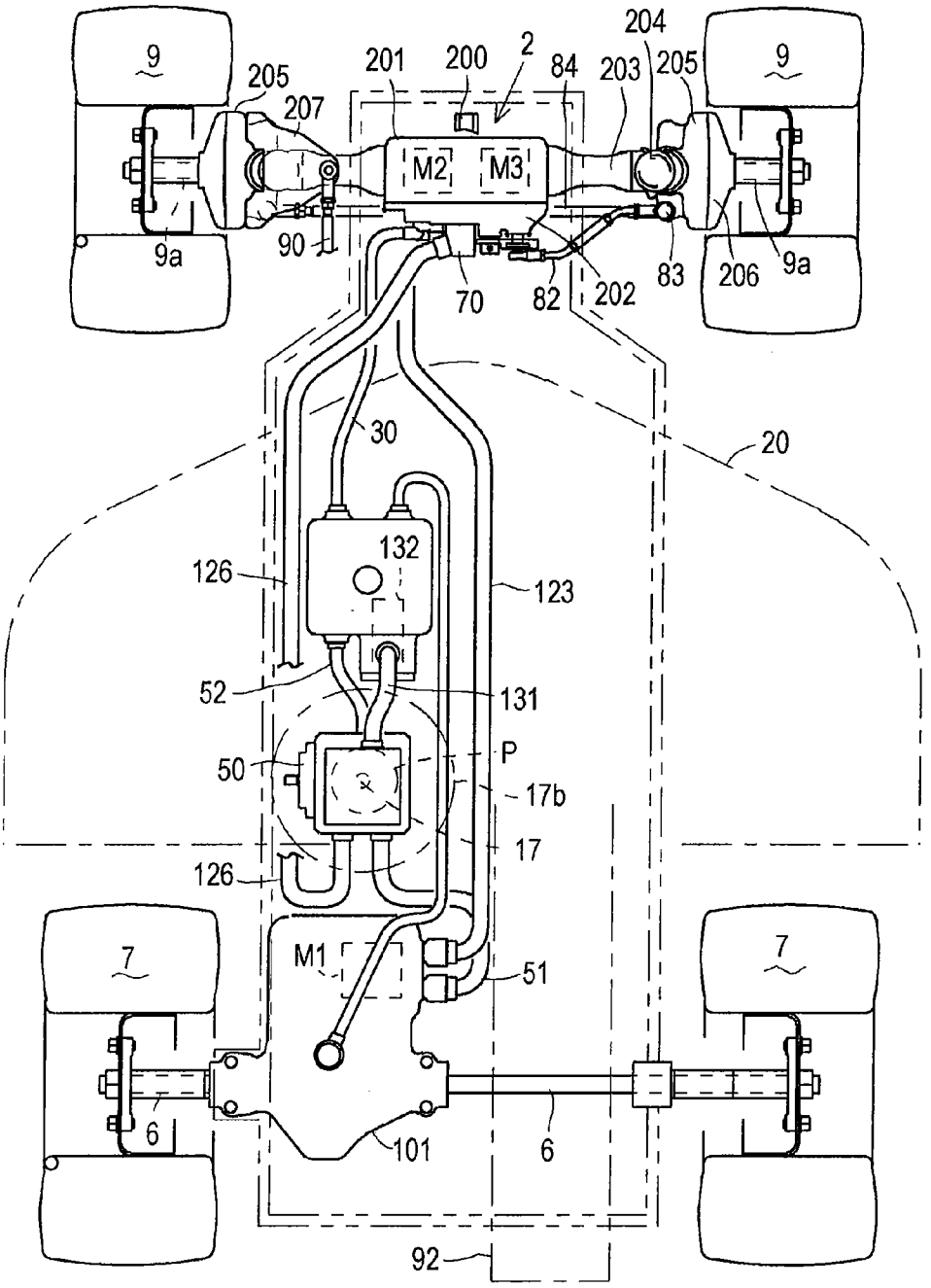
9
9
205
207
201
200
2
84
203
204
205
M2
M3
9a
90
70
82
202
83
206
9a
30
20
132
126
123
52
131
50
P
17b
17
126
7
M1
51
7
6
101
6
92

Fig. 6

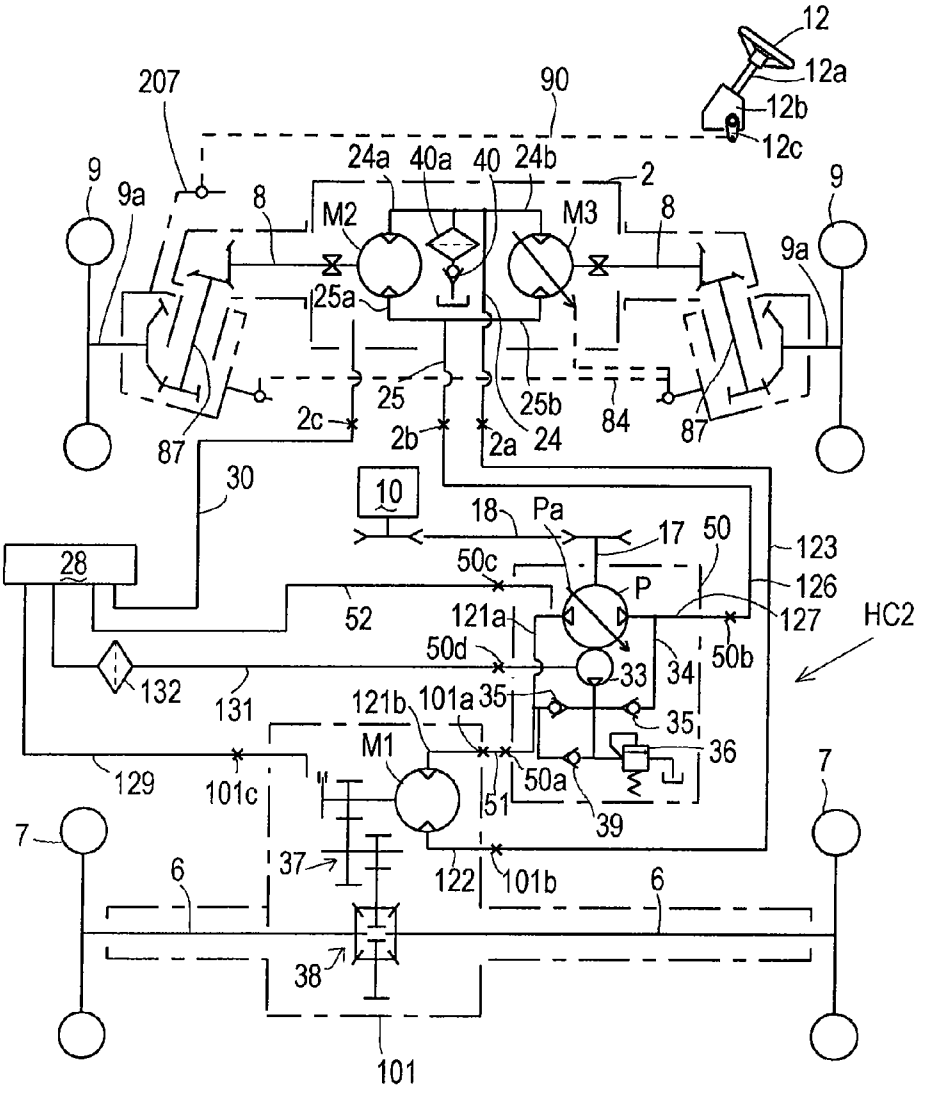
12
12a
12b
12c
207
90
24a
40a
40
24b
2
9
9a
8
M2
M3
8
9
9a
25a
25
25b
84
87
87
2c
2b
2a
24
30
10
18
Pa
17
50
123
28
50c
P
126
52
121a
127
HC2
50d
33
34
50b
132
131
121b
101a
35
35
36
129
101c
M1
51
50a
39
7
7
37
122
101b
6
6
38
101

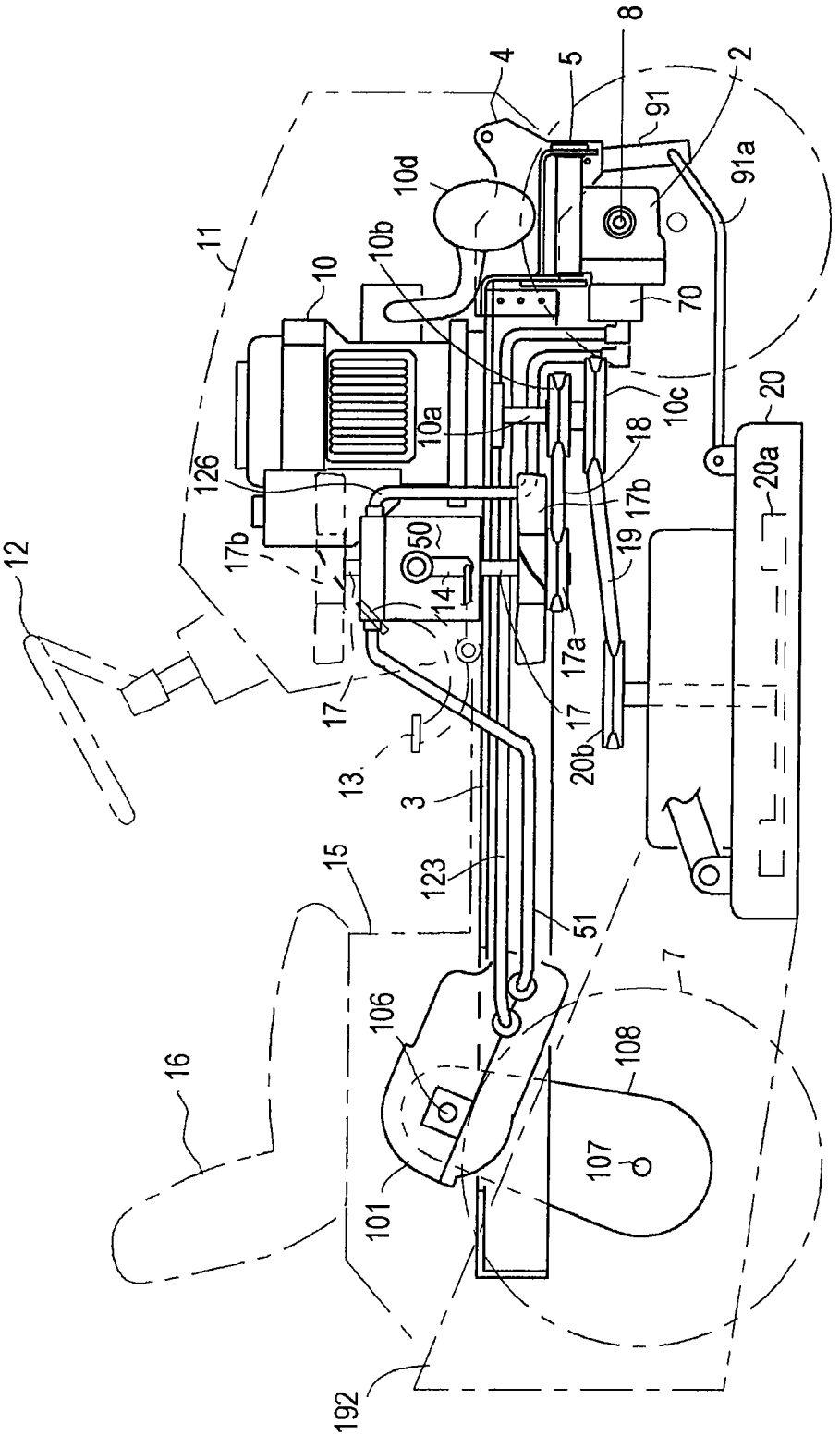
8
4
5
2
91
91a
10d
10b
11
10
70
10c
20
10a
18
20a
126
17b
19
50
12
14
17a
17
20b
13
3
15
123
51
7
106
108
16
107
101
192

Fig. 7

Fig. 8

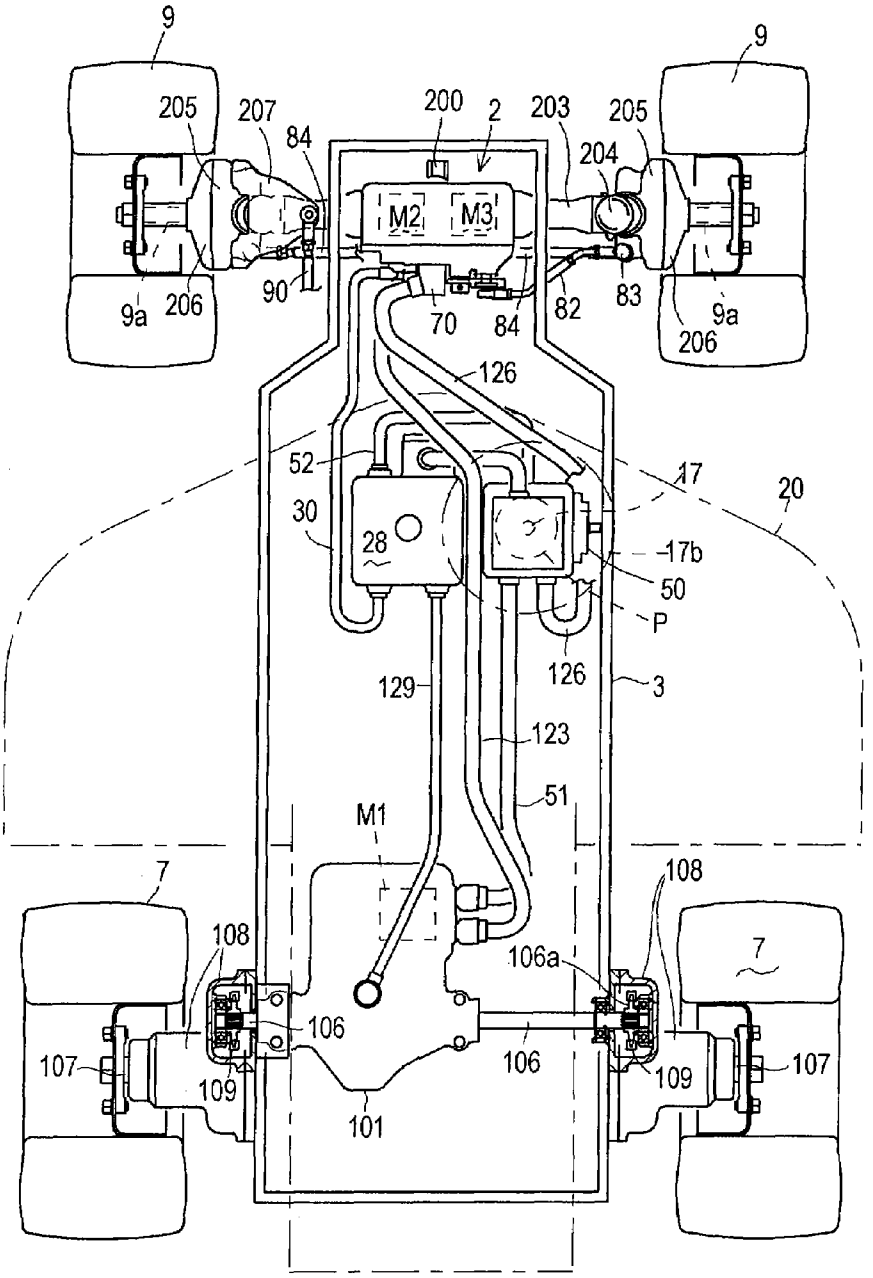
9
9
205
207
84
200
2
203
205
204
M2
M3
9a
206
90
70
84
82
83
9a
206
126
52
17
20
30
28
17b
50
P
126
3
129
123
51
M1
7
108
108
7
106a
106
106
107
109
109
107
101

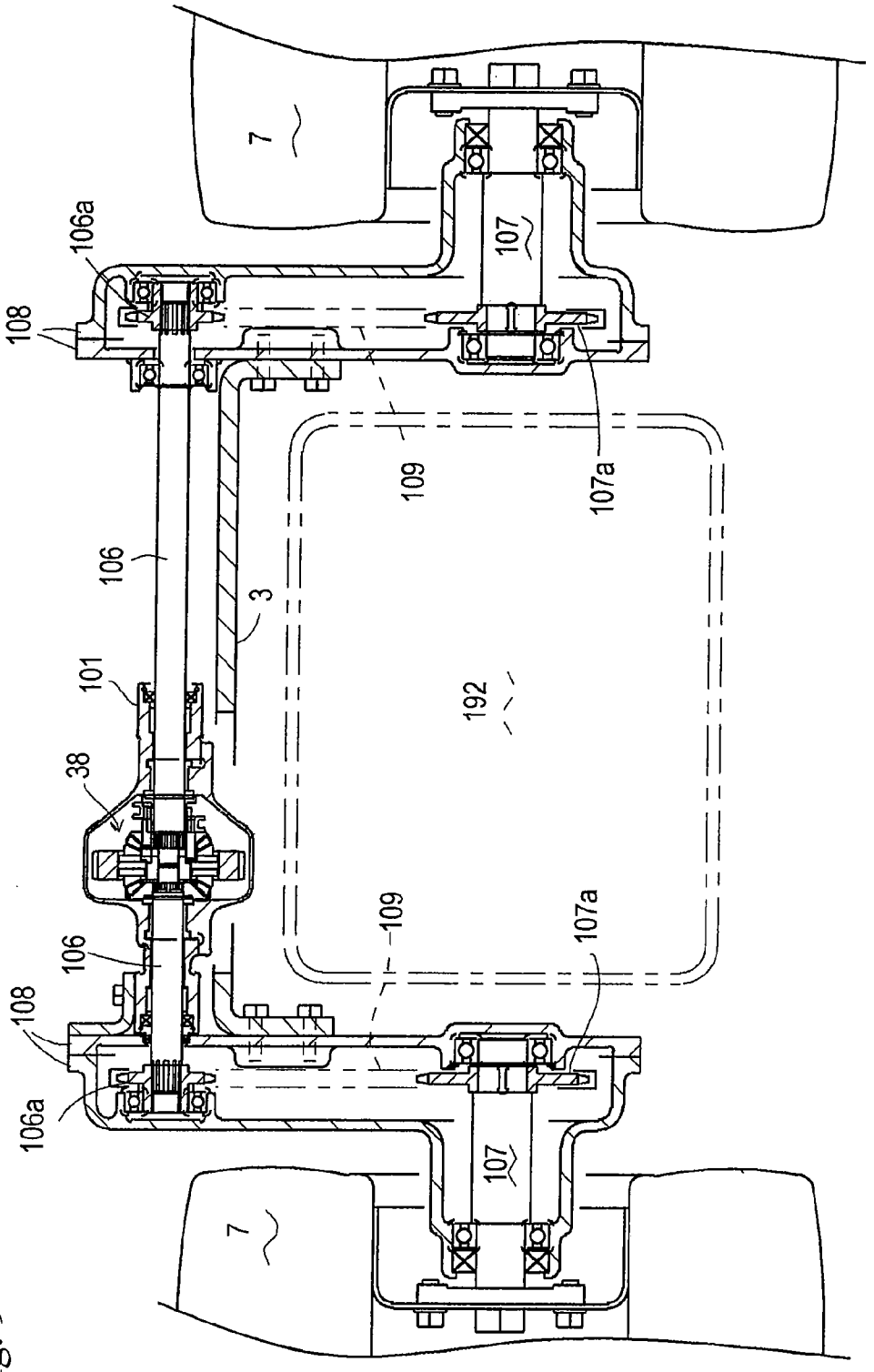
7
106a
108
107
109
107a
106
3
101
192
38
109
107a
106
108
106a
107
7

Fig. 9

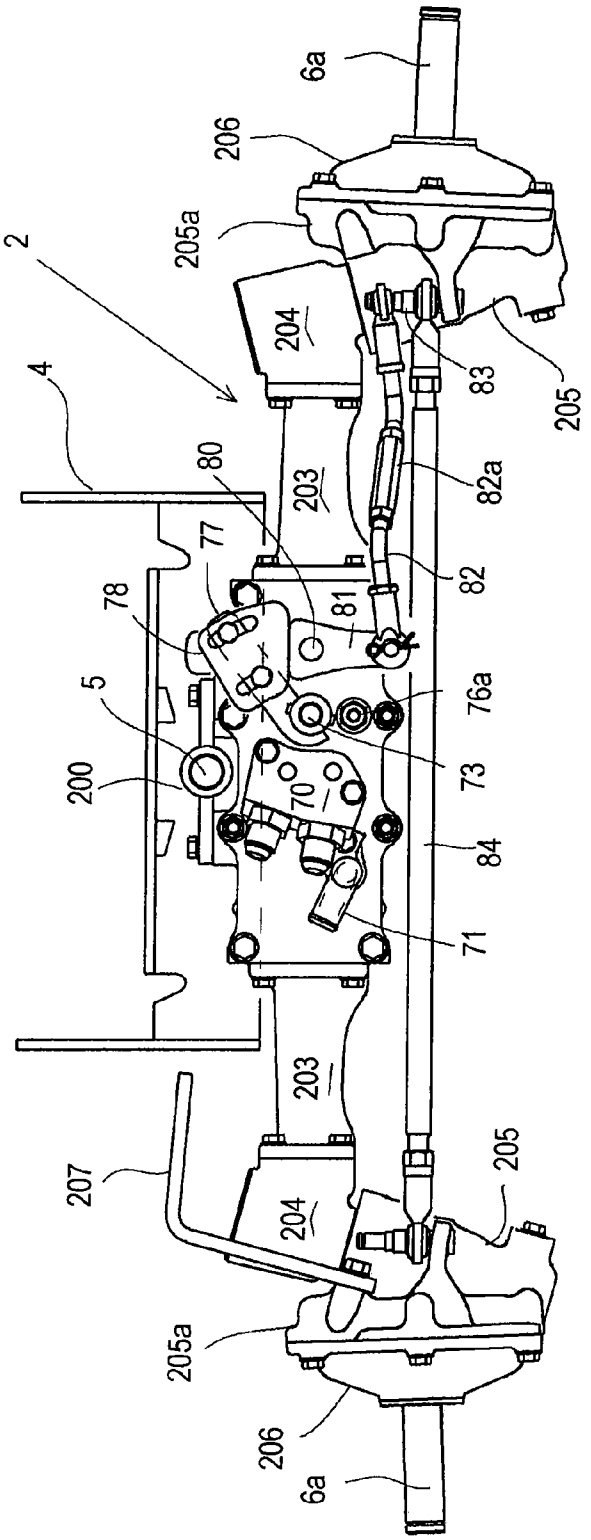
6a
206
205a
2
204
4
80
203
77
78
81
5
200
70
83
205
82a
82
76a
73
84
71
207
205
205a
206
6a

Fig. 10

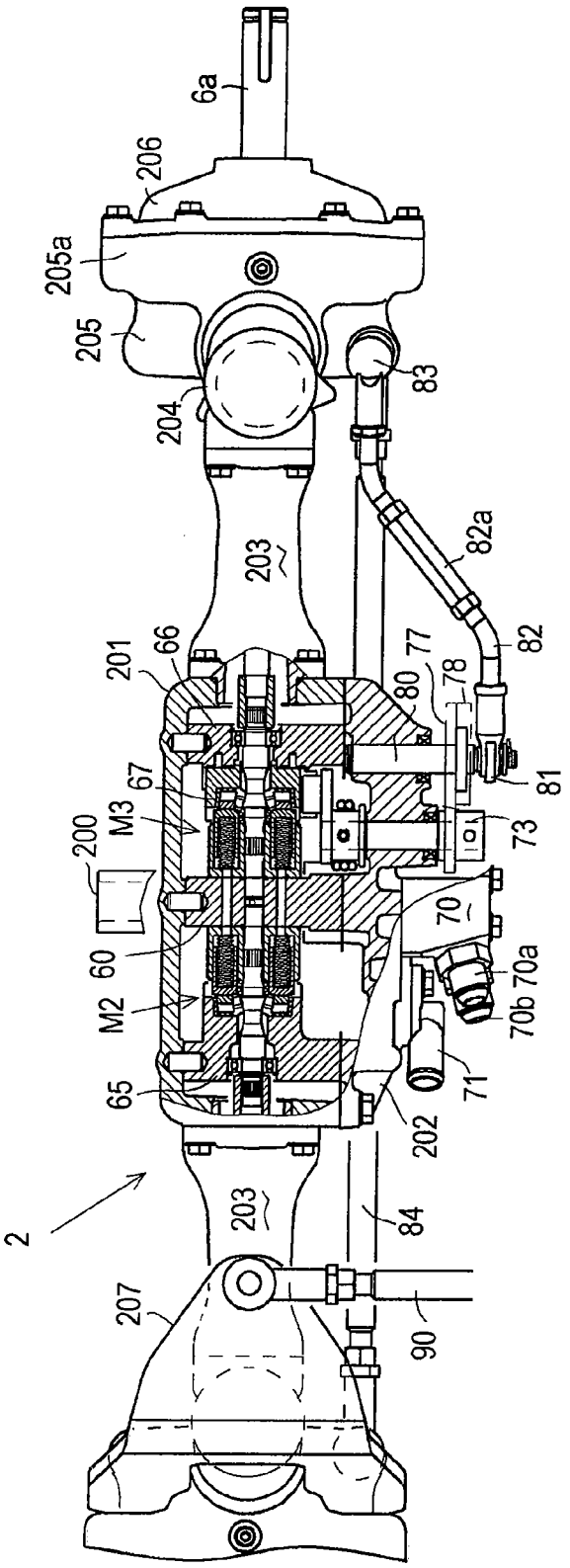
6a
206
205a
205
204
203
201
66
67
M3
200
60
M2
65
2
207
203
83
82a
82
77
78
80
81
73
70
70a
70b
71
202
84
90

Fig. 11

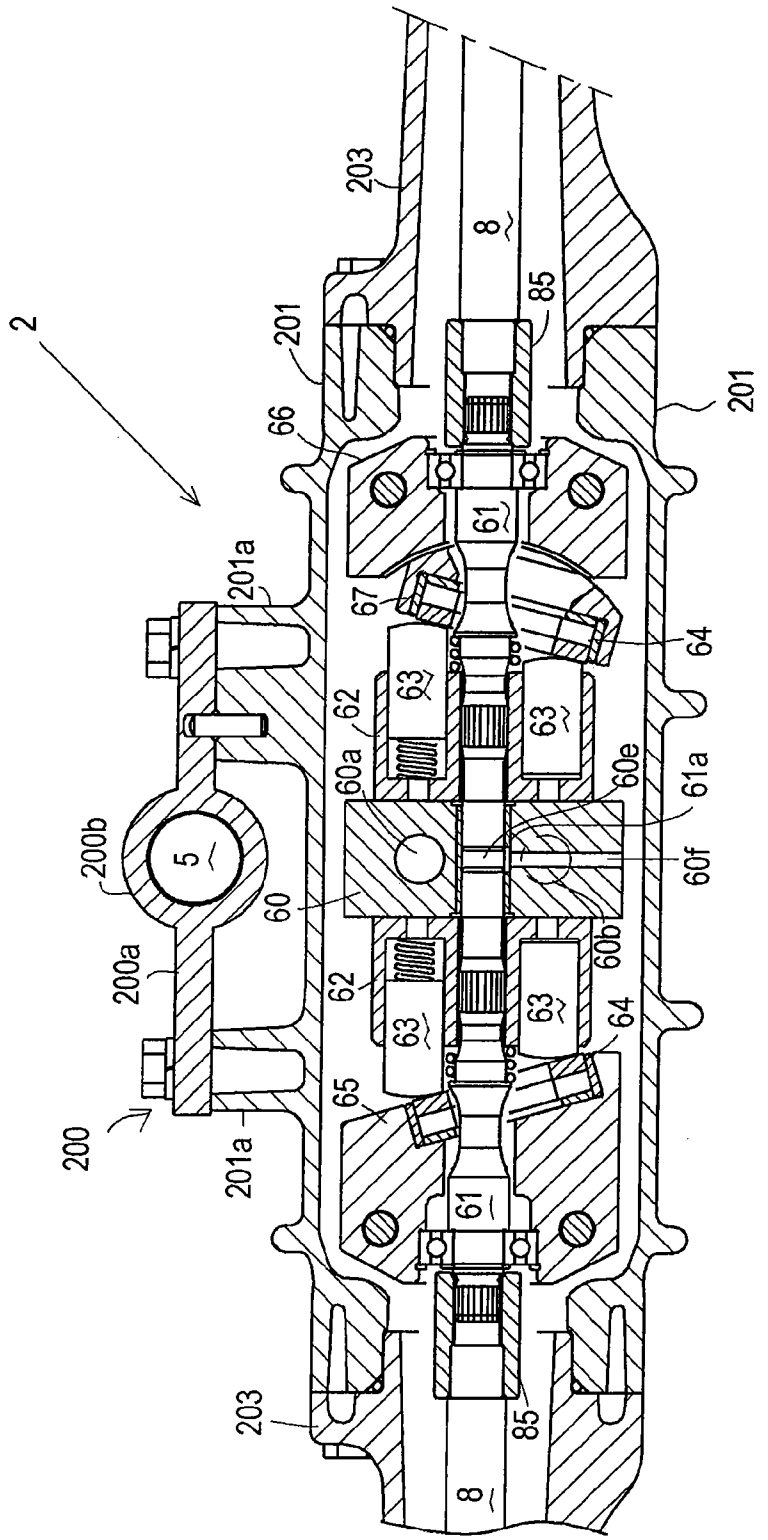
2
200
200a
200b
201
201a
203
5
60
60a
60b
60e
60f
61
61a
62
63
64
65
66
67
8
85

Fig. 12

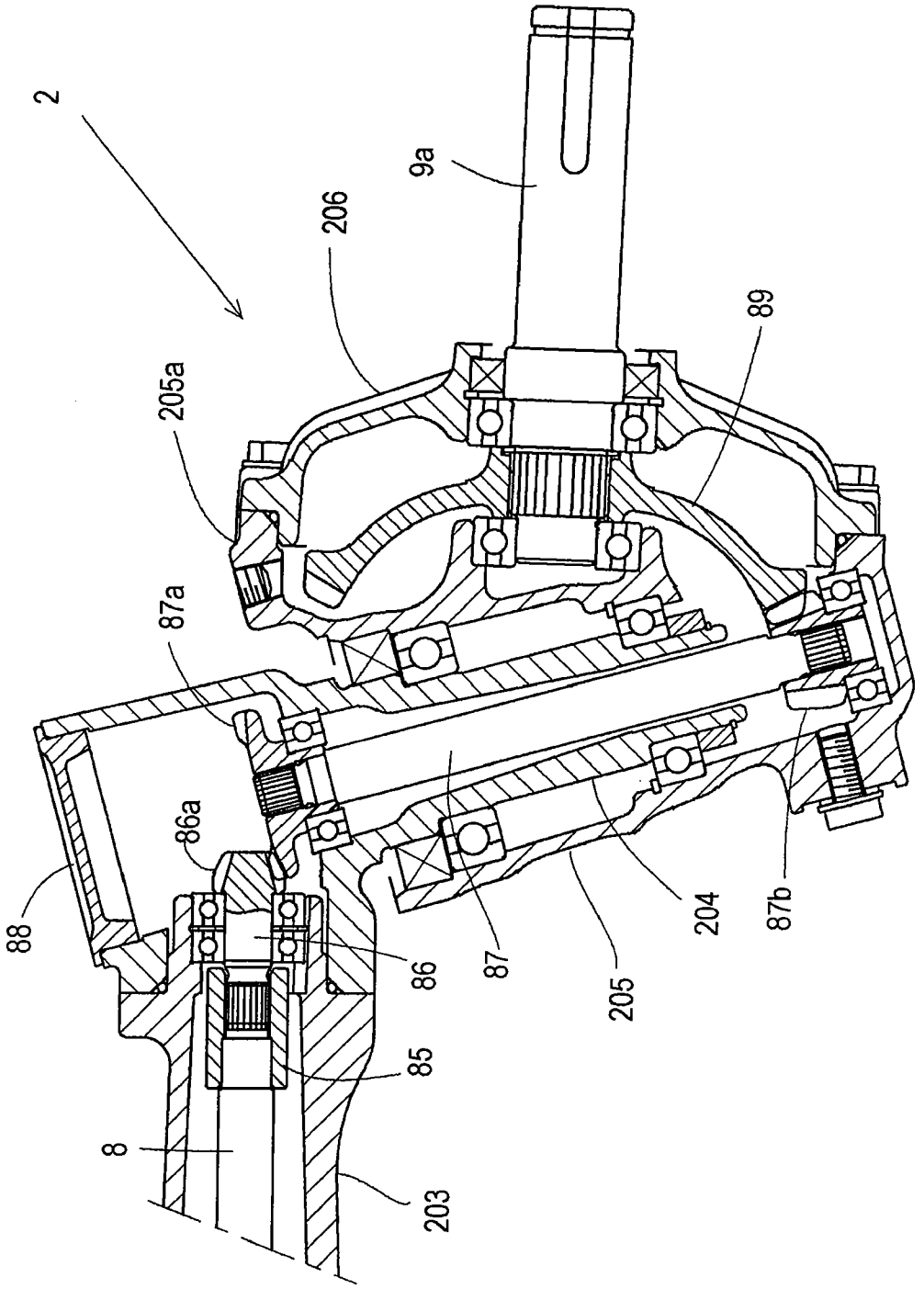

Fig. 13

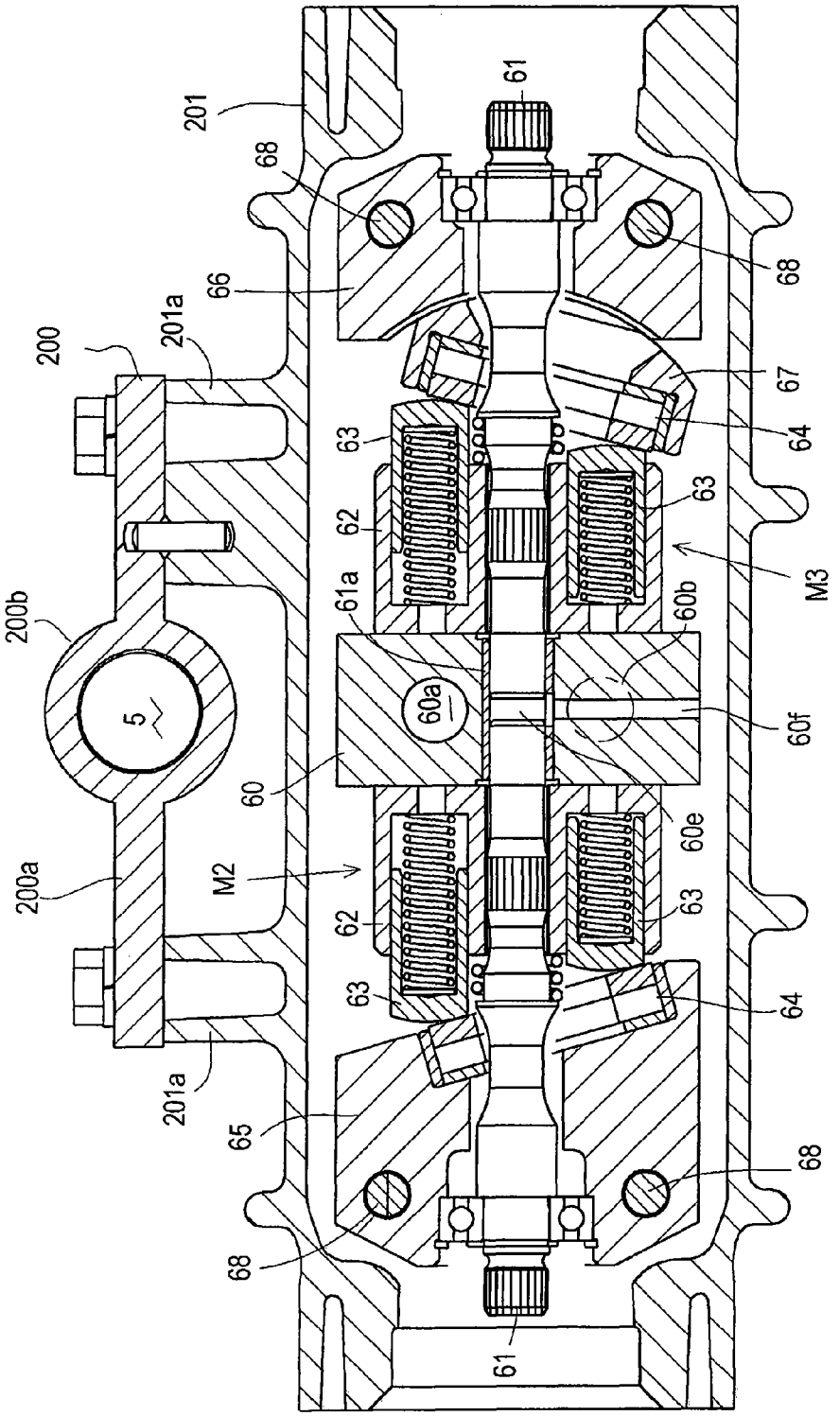
201
61
68
66
68
200
201a
67
64
63
62
63
M3
200b
61a
60b
5
60a
60f
60
60e
200a
M2
62
63
63
64
201a
65
68
68
61

Fig. 14

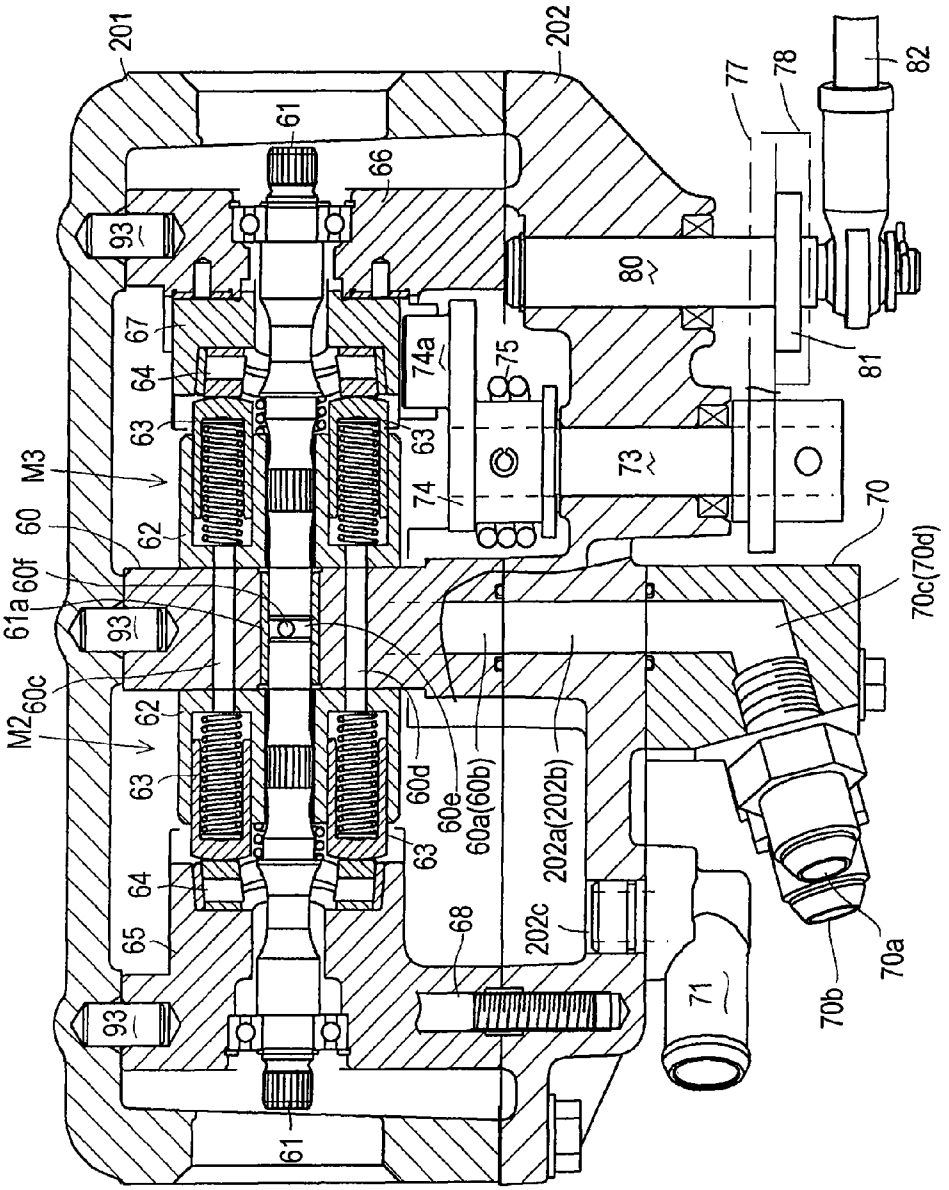
201
202
61
66
93
67
64
63
M3
60
62
60f
61a
60c
M2
65
68
60d
60e
60a(60b)
202a(202b)
202c
71
70b
70a
70c(70d)
70
73
74
74a
75
80
81
77
78
82

Fig. 15

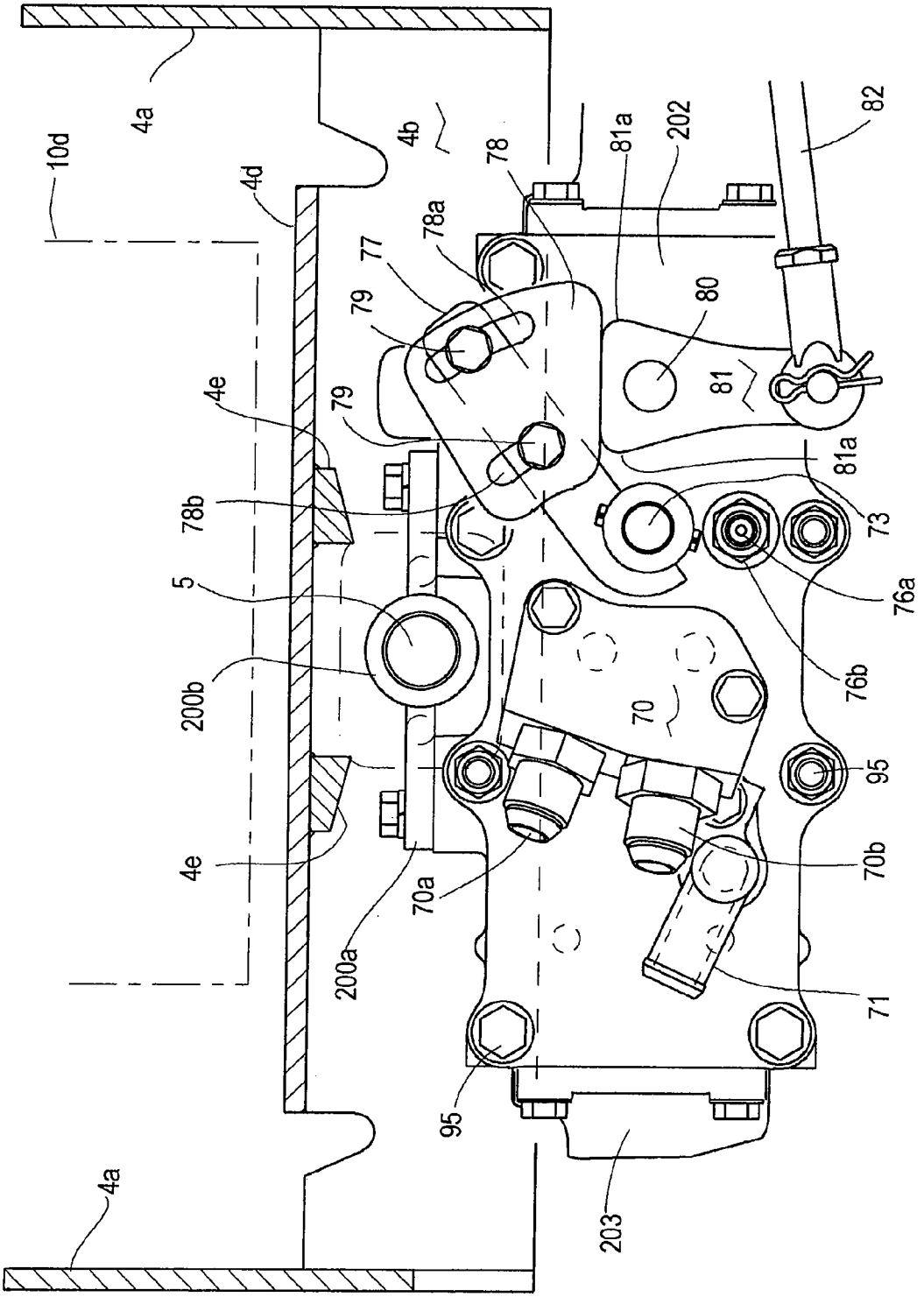
4a
10d
4d
4b
78
81a
202
82
78a
77
79
80
81
4e
79
81a
78b
73
5
76a
200b
76b
70
95
4e
70a
70b
200a
71
95
203
4a

Fig. 16

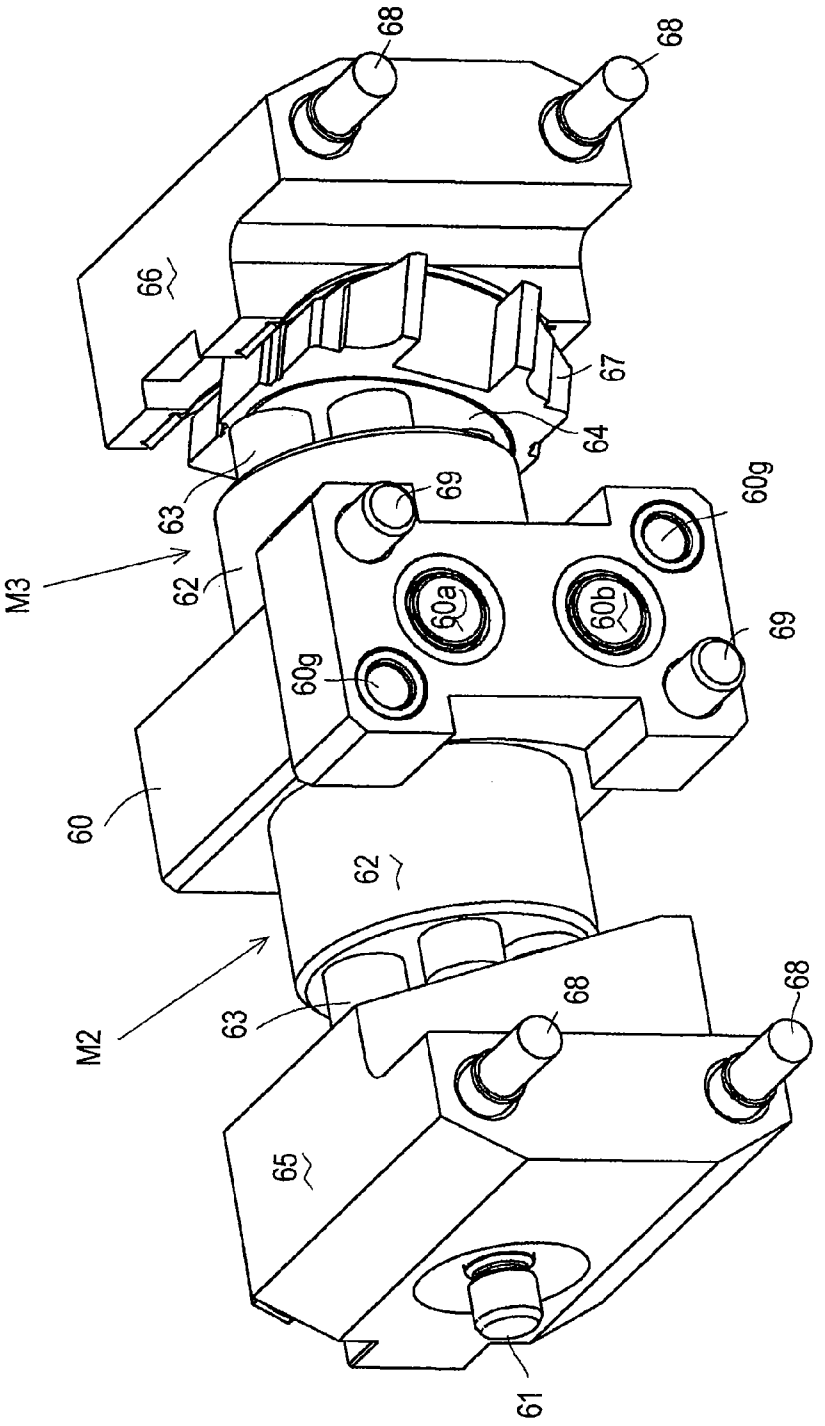

Fig. 17

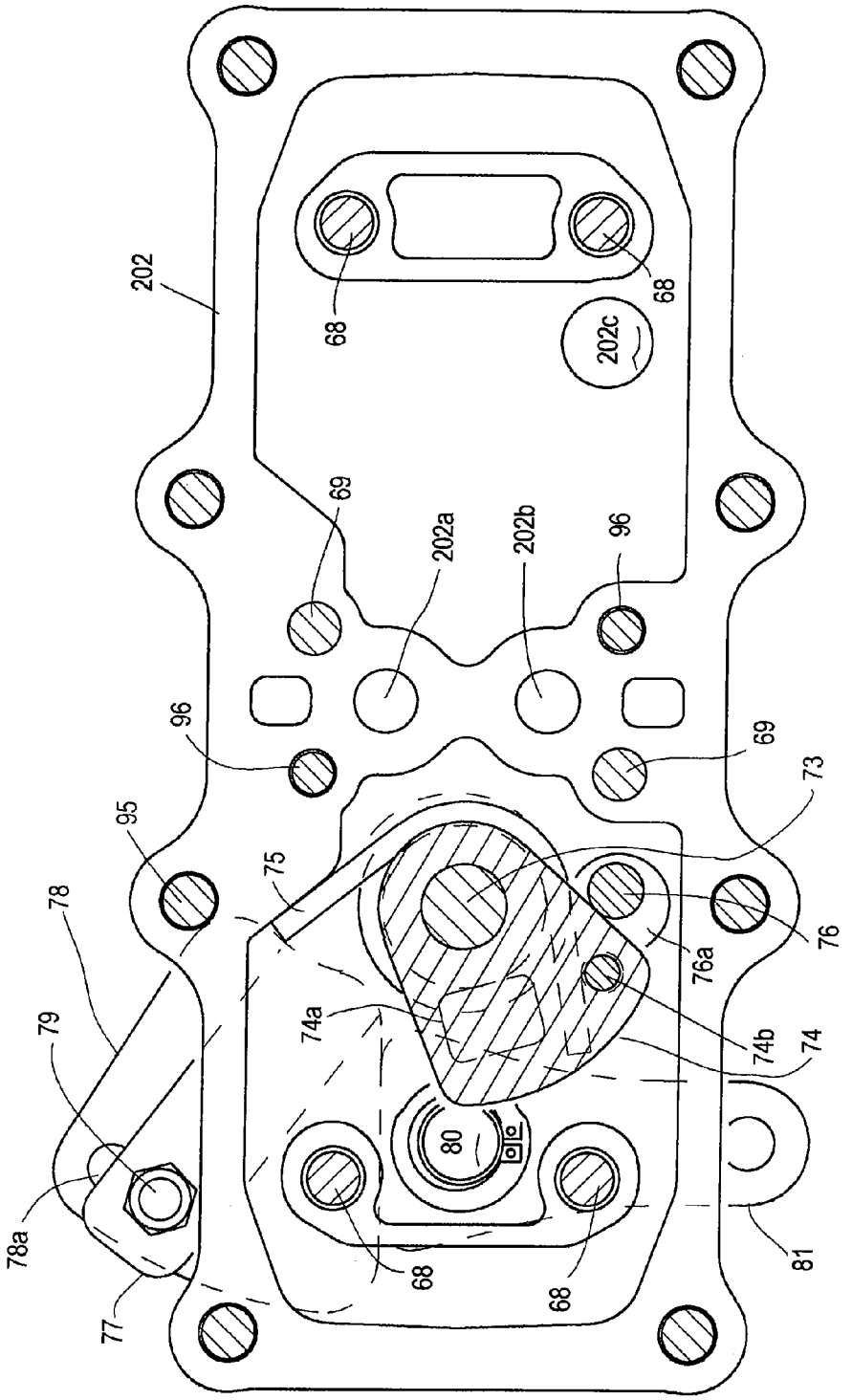
202
68
68
202c
69
202a
202b
96
96
69
73
95
75
78
76
76a
79
74a
74b
74
80
78a
68
68
81
77

Fig. 18

Fig. 19

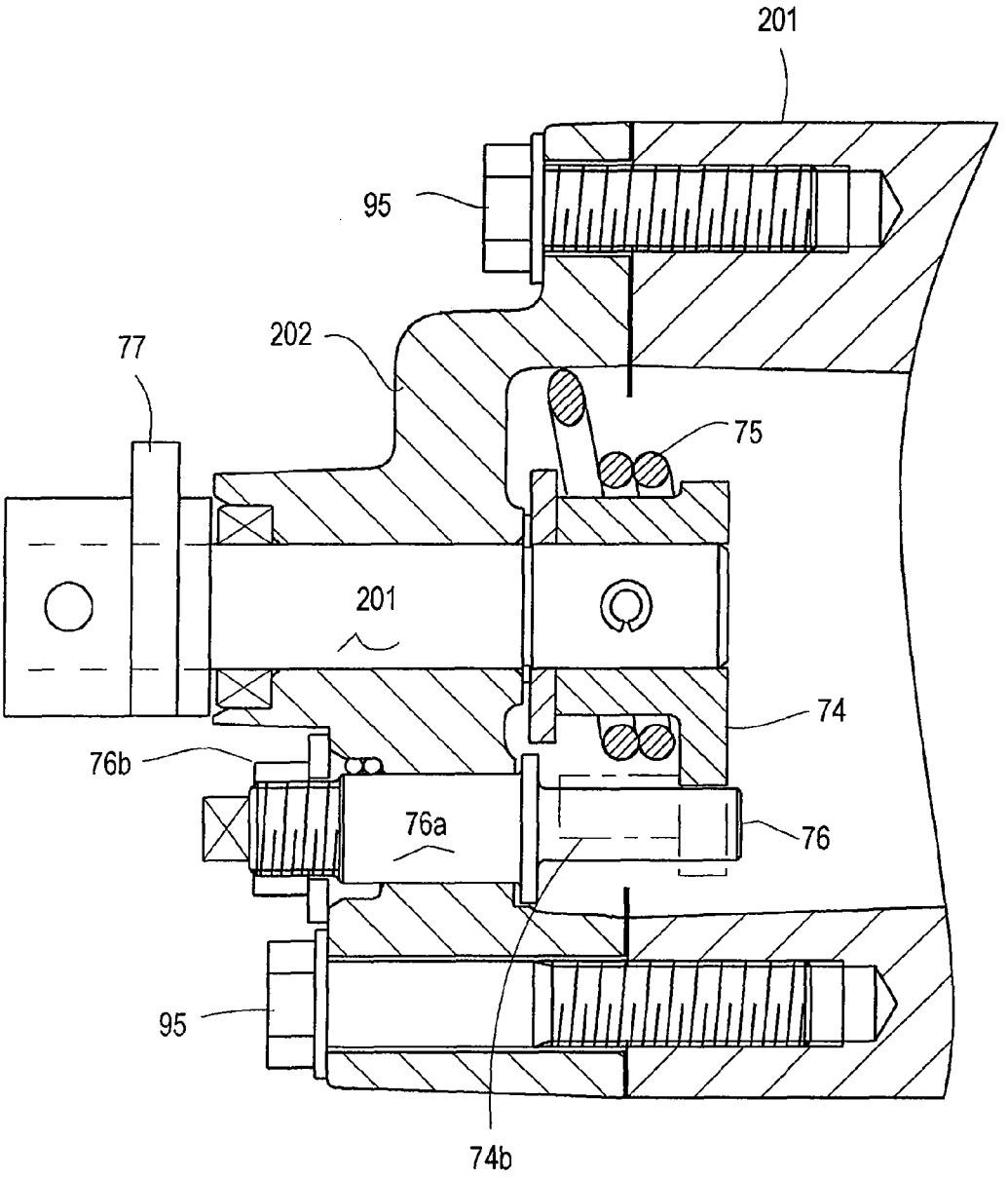

Fig. 20

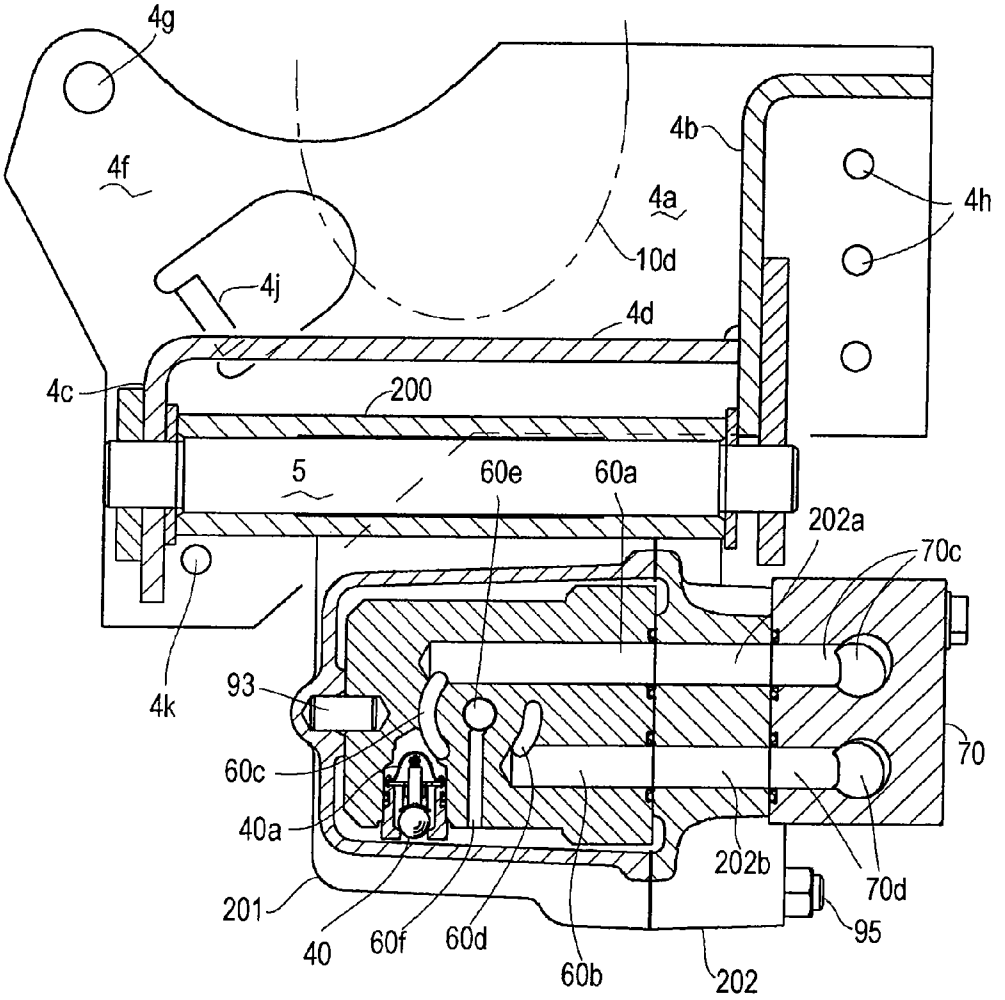
4g
4f
4b
4a
4h
10d
4j
4d
4c
200
5
60e
60a
202a
70c
4k
93
60c
40a
70
202b
70d
201
95
40
60f
60d
60b
202

Fig. 21

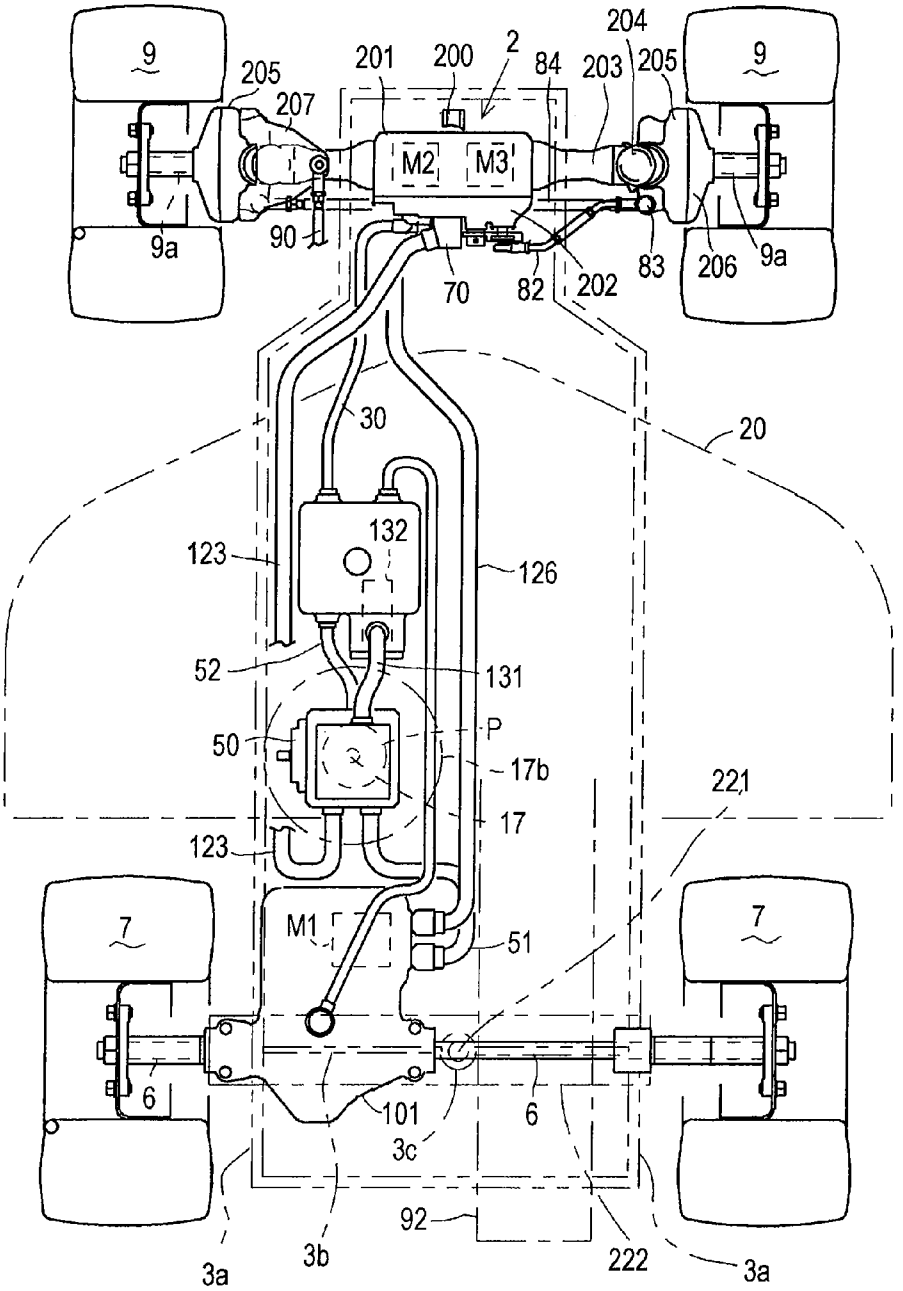
9
9
205
207
201
200
2
84
203
204
205
M2
M3
9a
90
70
82
202
83
206
9a
30
20
132
123
126
52
131
50
P
17b
17
221
123
7
7
M1
51
6
101
6
3c
92
3a
3b
222
3a

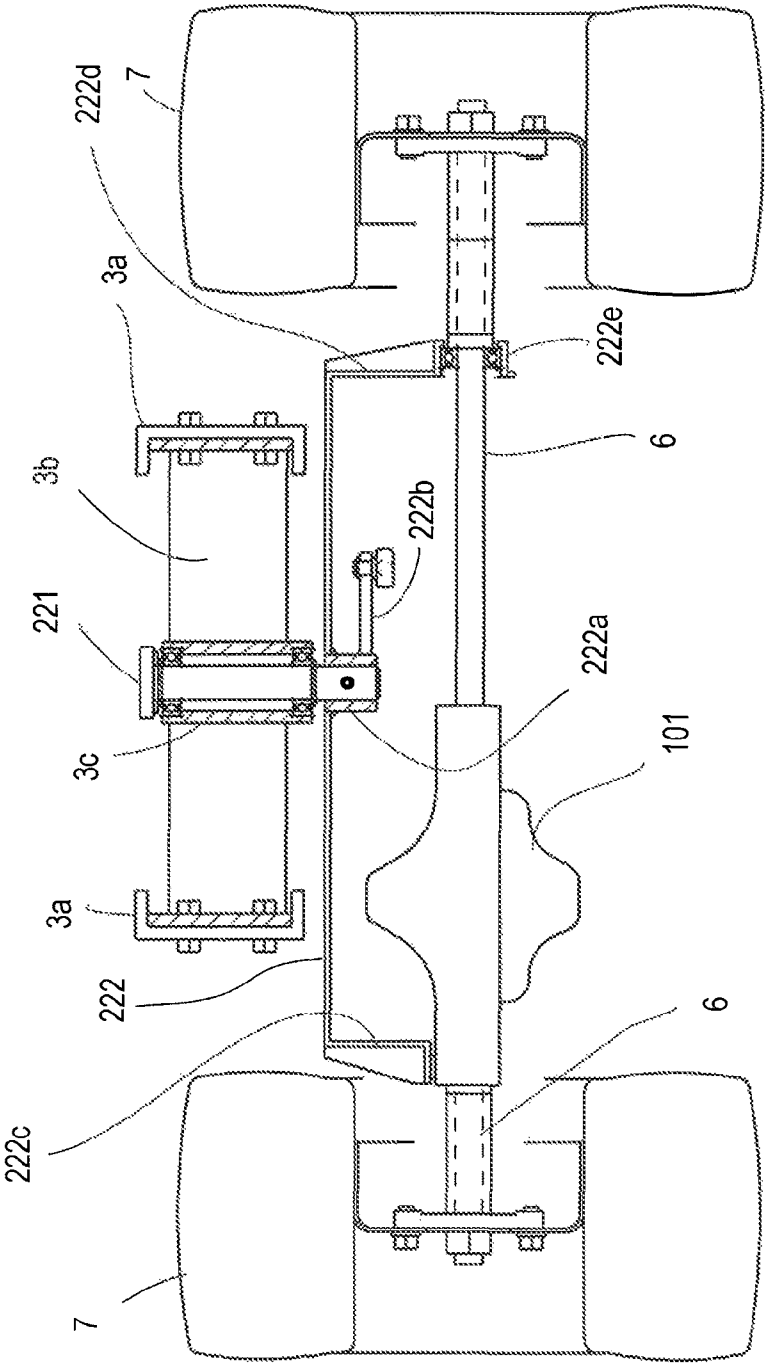

Fig. 22

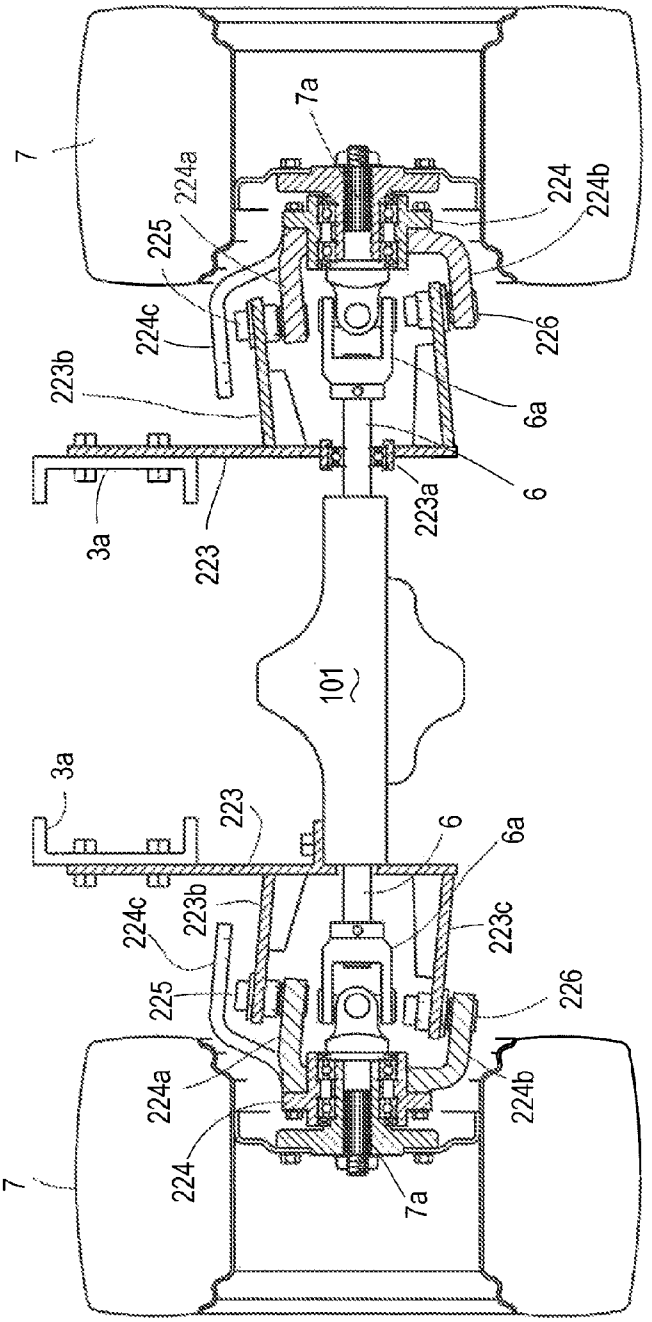
7
7a
224a
224
224b
225
224c
226
223b
6a
6
223a
3a
223
101
3a
223
6
6a
224c
223b
223c
225
226
224a
224b
224
7a
7

Fig. 23

HYDROSTATIC TRANSAXLE AND HYDRAULICALLY DRIVEN VEHICLE

CROSS REFERENCE TO RELATED APPLICATION

This application is a continuation of U.S. application Ser. No. 11/214,056, filed Aug. 30, 2005, now U.S. Pat. No. 7,588,103, the entire disclosure of which is incorporated herein by reference.

BACKGROUND OF THE INVENTION

1. Field of the Invention

The present invention relates to a hydrostatic transaxle, which supports a pair of left and right steerable drive wheels, and incorporates a pair of hydraulic motors for driving the respective drive wheels. Further, the present invention relates to a hydraulically driven vehicle, which comprises a common hydraulic pressure source and at least two hydraulic motors connected in series to the common hydraulic pressure source, wherein one of the at least two hydraulic motors drives front drive wheels (or a front drive wheel), and the other drives rear drive wheels (or a rear drive wheel).

2. Related Art

Conventionally, as disclosed in International Publication WO 2004/062956, there is a well-known hydraulically driven vehicle having a main transaxle and an auxiliary transaxle. The main transaxle supports main drive wheels, and comprises a hydraulic motor for driving the main drive wheels. The auxiliary transaxle supports a pair of auxiliary drive wheels, and comprises a pair of hydraulic motors for driving the respective auxiliary drive wheels. The vehicle has a hydraulic circuit fluidly connecting the hydraulic motors of the main and auxiliary transaxles to a hydraulic pump. In the hydraulic circuit, the hydraulic motor of the main transaxle and the pair of hydraulic motors of the auxiliary transaxle are connected in series to the hydraulic pump, and the hydraulic motors of the auxiliary transaxle are connected to the hydraulic pump in parallel to each other.

The left and right auxiliary drive wheels are steerable wheels. Both of the hydraulic motors of the auxiliary transaxle are variable in displacement so as to prevent drag of the steerable wheels or the main drive wheels. The hydraulic motors of the auxiliary transaxle are provided with respective movable swash plates moved according to steering operation of the vehicle, or according to change of left or right turning angle of the steerable wheels, so as to change rotary speed of the steerable wheels, i.e., generate difference between the main drive wheels and the auxiliary drive wheels, according to change of the left or right turning angle of the vehicle. However, the link mechanism for moving the two movable swash plates according to the turning of the steerable wheels is complicated, and expanded so as to reduce spaces for other parts. Further, the link mechanism requires a large operation force because of its small operational efficiency.

Further, the conventional vehicle is set so that peripheral speed of the front drive wheels becomes equal to peripheral speed of the rear drive wheels during straight traveling. However, there is a problem that the peripheral speed of the drive wheel may be unexpectedly reduced because of bad road condition so as to be slower than that corresponding to the amount of fluid flowing through the corresponding hydraulic motor, thereby causing stiff traveling of the vehicle.

Further, with respect to the conventional hydraulically driven vehicle, as disclosed in International Publication WO 2004/062956, the main transaxle is expanded because it

incorporates the hydraulic pump together with the hydraulic motor for driving the main drive wheels. Such a large-size transaxle may reduce variation of adaptable vehicles in size. Further, a pump shaft of the hydraulic pump projects outward from the transaxle so as to be provided thereon with a cooling fan. The expansion of the transaxle means that the area of the transaxle blown by cooling wind generated from the cooling fan becomes small relative to the transaxle. Besides, to efficiently cool fluid circulating in the HST fluid circuit having the series connection of the hydraulic motor for the main drive wheels and the pair of hydraulic motors for the auxiliary drive wheels to the hydraulic pump, it is advantageous that pipes for circulating fluid are blown by cooling wind generated from the cooling fan. However, it is difficult to concentrating the pipes adjacent to the cooling fan of the large-size transaxle. In this way, the conventional combination of the main transaxle incorporating the hydraulic pump and the hydraulic motor for driving the main drive wheels with the auxiliary transaxle incorporating the pair of hydraulic motors for driving the auxiliary drive wheels cannot ensure sufficient cooling efficiency for the HST fluid circuit.

SUMMARY OF THE INVENTION

A first object of the present invention is to provide a hydrostatic transaxle supporting a pair of left and right steerable drive wheels and comprising a pair of hydraulic motors for driving the respective drive wheels, wherein the hydrostatic transaxle is provided with a simple and compact link mechanism for controlling displacement of the hydraulic motors during turning of a vehicle.

To achieve the first object, a hydrostatic transaxle according to a first aspect of the present invention comprises: a transaxle casing; a pair of left and right axles disposed in the transaxle casing; a pair of hydraulic motors for driving the respective axles; and a pair of left and right steerable drive wheels disposed on left and right outsides of the transaxle casing so as to be drivingly connected to the respective axles. The hydraulic motors are disposed in the housing so as to be fluidly connected to a common hydraulic pressure source in parallel to each other. One of the hydraulic motors is a fixed displacement hydraulic motor, and the other is a variable displacement hydraulic motor, so that displacement of the variable displacement hydraulic motor is changed according to change of steered angles of the drive wheels.

Due to the construction, the change of steered angles of the drive wheels does not have to be transmitted to a fixed swash plate or another fixed displacement-setting member of the fixed displacement hydraulic motor. Therefore, a link mechanism for moving a movable swash plate or another variable displacement-setting member of the variable displacement hydraulic motor according to change of turning angle of the vehicle can be simple and compact in comparison with the conventional type transaxle having a pair of variable displacement hydraulic motors, thereby expanding a space around the hydrostatic transaxle for arrangement of other members, and increasing variation of layout in the vehicle. Further, when the displacement of the variable displacement hydraulic motor is reduced during turning of the vehicle so as to increase peripheral speed of the drive wheel driven by the variable displacement hydraulic motor, peripheral speed of the drive wheel driven by the fixed displacement hydraulic motor is also increased according to the increase of peripheral speed of the drive wheel driven by the variable displacement hydraulic motor so as to ensure smooth turning of the vehicle without drag of the drive wheels while keeping proper driving force.

In the first aspect, preferably, a pair of left and right steerable casings are relatively horizontally rotatably attached onto respective left and right ends of the transaxle casing so as to support the respective drive wheels, thereby making the drive wheels steerable. The variable displacement hydraulic motor is provided with a displacement control section for controlling displacement of the variable displacement hydraulic motor. The displacement control section is connected to a rod extended from one of the steerable casings so as to enable the change of displacement of the variable displacement hydraulic motor according to change of steered angles of the drive wheels.

Since the displacement control section changes the displacement of the variable displacement hydraulic motor correspondingly to the change of steered angles of the drive wheels, the rod does not have to be extended adjacent to the steerable casing supporting the drive wheel driven by the fixed displacement hydraulic motor, thereby ensuring a large space for arrangement of another member, such as a hydraulic fluid port for fluidly connecting the pair of hydraulic motors to the hydraulic pressure source.

Therefore, preferably, the displacement control section of the variable displacement hydraulic motor and a hydraulic fluid port for fluidly connecting the pair of hydraulic motors to the hydraulic pressure source are juxtaposed on an outer surface of the transaxle casing incorporating the pair of hydraulic motors. Due to this layout, the hydrostatic transaxle can be entirely minimized and the hydraulic fluid port can be disposed at a suitable position for piping.

The variable displacement hydraulic motor with the movable swash plate requires a cam mechanism for converting axial (push-and-pull) movement of the rod to the rotary movement of the movable swash plate. If both the hydraulic motors in the transaxle were variable displacement hydraulic motors with respective movable swash plates, the hydraulic motors would require a complicated cam mechanism for converting the axial movement of the rod extended from one of the steerable casings to the rotary movements of the two movable swash plates. However, in the transaxle according to the first aspect of the present invention, the variable displacement hydraulic motor and the fixed displacement hydraulic motor are provided, and only the variable displacement hydraulic motor has the displacement control section requiring such a cam mechanism. Therefore, the cam mechanism can be compact and reduce a space for arrangement thereof. Preferably, the cam mechanism of the displacement control section can be simply constituted by a cam member rotated by axial movement of the rod, and a rotary member contacting the cam member so as to be rotated integrally with a movable swash plate of the variable displacement hydraulic motor according to rotation of the cam member.

Preferably, a pin is provided on the steerable casing from which the rod is extended, and a tie rod connected to the other steerable casing and the rod connected to the displacement control section are pivoted on the pin, thereby reducing the number of component parts, and preventing the rod and the tie rod from crossing so as to hinder each other and hinder movement of the steerable casings.

In the first aspect, preferably, the transaxle casing comprises: a pair of left and right axle casings incorporating the respective axles; and a motor casing incorporating the pair of hydraulic motors. The motor casing is removably interposed between the left and right axle casings. Therefore, the motor casing with the pair of hydraulic motors therein can be removed from the axle casings for easy maintenance of the pair of hydraulic motors. Further, a spacer can be easily disposed between the axle casing and the motor casing so as to ensure a required tread between left and right drive wheels.

In the first aspect, preferably, a center pin bracket is removably attached to the transaxle casing so as to swingably suspend the transaxle casing from a vehicle frame. Therefore, different center pin brackets are prepared so that, even if a positional relation of the transaxle casing to a center pin changes due to change of a vehicle, a suitable center pin bracket can be selected so as to suitably equip the transaxle casing on the target vehicle. In this way, the transaxle can be standardized for various vehicles. Similarly, an arm for operatively connecting the steerable casing to a steering operation device on a vehicle may be removably attached to the steerable casing.

To achieve the first object, a hydrostatic transaxle according to a second aspect of the present invention comprises: a transaxle casing; a pair of left and right axles disposed in the transaxle casing; a pair of hydraulic motors for driving the respective axles being disposed in the housing so as to be fluidly connected to a common hydraulic pressure source in parallel to each other; and a pair of left and right steerable drive wheels disposed on left and right outsides of the transaxle casing so as to be drivingly connected to the respective axles. Both the hydraulic motors are fixed displacement hydraulic motors.

Therefore, the hydrostatic transaxle requires no link mechanism for moving swash plates of the hydraulic motors according to steering rotation of the steerable casings, thereby being compact and economical, and ensuring a large freedom degree of piping for supplying fluid to the hydraulic motors. If a vehicle does not require difference of peripheral speed between front wheels and rear wheels during turning of the vehicle because the front wheels and the rear wheels are equally distant from the turning center of the vehicle or for another reason, this hydrostatic transaxle is thoroughly applicable. Even if a vehicle employing this hydrostatic transaxle requires difference of peripheral speed between front wheels and rear wheels during turning of the vehicle, the vehicle can turn smoothly so as to give a feeling of two-wheel drive by employing later-discussed setting of peripheral speeds of front and rear wheels.

A second object of the present invention is to provide a hydraulically driven vehicle, comprising: a first drive wheel disposed at one of front and rear portions of the vehicle; a second drive wheel disposed at the other rear or front portion of the vehicle; first and second hydraulic motors for driving the respective first and second drive wheels; a common hydraulic pump; and a hydraulic circuit fluidly connecting the first and second hydraulic motors in series to the hydraulic pump, smoothened in straight-traveling thereof.

To achieve the second object, a hydraulically driven vehicle according to a third aspect of the present invention comprises: a first drive wheel disposed at one of front and rear portions of the vehicle; a second drive wheel disposed at the other rear or front portion of the vehicle; a first hydraulic motor for driving the first drive wheel; a second hydraulic motor for driving the second drive wheel; a common hydraulic pump for supplying fluid to the first and second hydraulic motors; and a hydraulic circuit fluidly connecting the first and second hydraulic motors in series to the hydraulic pump. Peripheral speed of the first drive wheel is set to be equal to peripheral speed of the second drive wheel, or to be slightly larger than peripheral speed of the second drive wheel, during straight traveling of the vehicle. The hydraulic circuit includes a supply portion from which fluid is supplied to the second hydraulic motor. A check valve is disposed in the

supply portion so as to introduce fluid into the hydraulic circuit from outside of the hydraulic circuit.

Therefore, during straight traveling of the vehicle, even if the peripheral speed of the first drive wheel is reduced relative to a set output of the first hydraulic motor due to bad road condition, the peripheral speed of the first drive wheel can be kept to be equal to the peripheral speed of the second drive wheel, or larger than the peripheral speed of the second drive wheel, so that the second drive wheel may be rotated according to rotation of the first drive wheel, however, the first drive wheel is hardly rotated according to rotation of the second drive wheel, thereby canceling stiffness in straight traveling caused by the phenomenon that peripheral speeds of the first and second drive wheels alternately exceed each other. However, due to this peripheral speed setting of the first and second drive wheels, a suction port of the second hydraulic motor tends to be hydraulically depressed so as to reduce drive efficiency of the second hydraulic motor. This problem is solved by the check valve, which is disposed in the supply portion of the hydraulic circuit for supplying fluid to the second hydraulic motor so as to introduce fluid into the hydraulic circuit from outside of the hydraulic circuit, thereby ensuring a proper drive condition of the second hydraulic motor. Further, by using the configuration of the third aspect, a drive mode of the vehicle can be automatically switched between a normal drive mode of the vehicle by substantially driving only the first drive wheel and an emergency drive mode of the vehicle by driving both the first and second drive wheels when slipping of the first drive wheel is detected. That is, if the vehicle has a pair of left and right first drive wheels and a pair of left and right second drive wheels, the vehicle can be configured so that a two-wheel drive mode depending on driving the first drive wheels is set for normal traveling of the vehicle, and a four-wheel drive mode depending on driving the first and second drive wheels is automatically set when slipping of the first wheel or wheels is detected. Therefore, the vehicle can save energy cost at its work of light-load traction and reduce wear of tires of the first and second drive wheels.

In the third aspect, preferably, the hydraulic circuit is configured so that fluid delivered from the hydraulic pump circulates in the hydraulic circuit so as to pass the second hydraulic motor after passing the first hydraulic motor. Therefore, if the second drive wheel is stuck (in a ditch), or if the vehicle weight applied on the first drive wheel exceeds the vehicle weight applied on the second drive wheel because of traveling of the vehicle on a slope, the first hydraulic motor supplied with fluid from the hydraulic pump prior to the second hydraulic motor can be effectively driven so that, by driving the first drive wheel, the vehicle can travel on the slop smoothly or escape from being stuck.

Alternatively, in the third aspect, preferably, the hydraulic circuit is configured so that fluid delivered from the hydraulic pump circulates in the hydraulic circuit so as to pass the first hydraulic motor after passing the second hydraulic motor. Therefore, if the first drive wheel is stuck (in a ditch), or if the vehicle weight applied on the second drive wheel exceeds the vehicle weight applied on the first drive wheel because of traveling of the vehicle on a slope, the second hydraulic motor supplied with fluid from the hydraulic pump prior to the first hydraulic motor can be effectively driven so that, by driving the second drive wheel, the vehicle can travel on the slop smoothly or escape from being stuck.

To achieve the second object, a hydraulically driven vehicle according to a fourth aspect of the present invention comprises: a first drive wheel disposed at one of front and rear portions of the vehicle; a pair of second steerable drive wheels disposed at the other rear or front portion of the vehicle; a first fixed displacement hydraulic motor for driving the first drive wheel; a pair of second fixed displacement hydraulic motors for driving the respective second drive wheels; a common hydraulic pump for supplying fluid to the first hydraulic motor and the pair of second hydraulic motors; and a hydraulic circuit fluidly connecting the first hydraulic motor and the pair of second hydraulic motors in series to the hydraulic pump, and fluidly connecting the second hydraulic motors to the hydraulic pump in parallel to each other. Peripheral speed of the first drive wheel is set to be equal to peripheral speeds of the second drive wheels, or to be slightly larger than peripheral speeds of the second drive wheels, during straight traveling of the vehicle. The hydraulic circuit includes a supply portion from which fluid is supplied to the pair of second hydraulic motors. A check valve is disposed in the supply portion so as to introduce fluid into the hydraulic circuit from outside of the hydraulic circuit.

The second fixed displacement hydraulic motors fluidly connected to the hydraulic pump in parallel to each other require no link mechanism for moving swash plates (or other displacement-setting members) of the second hydraulic motors according to change of steered angles of the second steerable drive wheels. Therefore, a drive system for driving the second drive wheels can be simple, compact, and economical. Further, due to the peripheral speed setting of the first and second drive wheels, the stiffness in straight traveling can be canceled. In this peripheral speed setting condition, the check valve can supply fluid to suction ports of the second hydraulic motors which tend to be hydraulically depressed, thereby ensuring proper drive condition of the second hydraulic motors. Even while both the second hydraulic motors are fixed in displacement, the peripheral speed setting of the first and second drive wheels during straight traveling of the vehicle causes the second steerable drive wheels to be rotated according to rotation of the first drive wheel so as to prevent drag of the second steerable drive wheels during turning of the vehicle, whereby the vehicle can turn as smoothly as a four-wheel drive vehicle set in a two-wheel drive mode. Since both the second hydraulic motors are fixed in displacement, the vehicle in turning can obtain drive force which is substantially equal to that ensured by a three-wheel drive mode, because the second drive wheel disposed on the distal side of turning circle of the vehicle is driven by pressure from the contacting ground surface.

A third object of the present invention is to provide a hydraulically driven vehicle comprising two front and rear transaxles incorporating respective hydraulic motors for driving respective axles, wherein one of the front and rear transaxles, which conventionally incorporates a hydraulic pump together with the hydraulic motor, is minimized, and wherein the transaxles and a hydraulic circuit for driving the hydraulic motors is effectively cooled.

To achieve the third object, a hydraulically driven vehicle according to a fifth aspect of the present invention comprises: front and rear transaxles incorporating respective hydraulic motors for driving respective axles; and a hydraulic pump unit for supplying the front and rear transaxles. The hydraulic pump unit is disposed separately from the front and rear transaxles. Therefore, one of the front and rear transaxles, which conventionally incorporates a hydraulic pump together with the hydraulic motor, is minimized so as to enhance its applicability range for variable vehicles.

In the fifth aspect, preferably, the vehicle further comprises: a vehicle frame; and an engine for driving the hydraulic pump unit. Both the engine and the hydraulic pump unit are vibro-isolatingly mounted on the vehicle frame. Vibro-

isolation of the hydraulic pump unit can be ensured easily together with the engine so as to silence the vehicle.

In the fifth aspect, preferably, the hydraulic pump unit comprises a cooling fan. In comparison with a cooling fan provided on the conventional large transaxle incorporating both hydraulic pump and motor, the cooling fan of the hydraulic pump unit can be combined with the following configuration so as to improve efficiency of cooling the hydraulic pump unit, the front and rear transaxles and a hydraulic circuit comprising the hydraulic pump and motors, thereby prolonging lives of the hydraulic pump and motors, and improving the mechanical efficiency.

In the situation that the hydraulic pump unit comprises the cooling fan, preferably, at least one of the front and rear transaxles is disposed in an area blown by cooling wind generated from the cooling fan of the hydraulic pump unit, thereby being sufficiently cooled by the cooling fan.

Since pipes for circulating fluid supplied to the hydraulic motors can be concentrated around the compact hydraulic pump unit, preferably, a pipe for circulating fluid supplied to the first and second hydraulic motors is partly disposed in an area blown by cooling wind generated from the cooling fan of the hydraulic pump unit, thereby effectively cooling hydraulic fluid and improving operational reliability and endurance of the hydraulic pump and motors.

Further preferably, a reservoir tank is disposed adjacent to the hydraulic pump unit, and a pipe connecting the reservoir tank to at least one of the hydraulic pump unit and the first and second transaxles is disposed in an area blown by cooling wind generated from the cooling fan of the hydraulic pump unit. Therefore, fluid in the reservoir tank can also be effectively cooled so as to further improve efficiency of cooling fluid circulating between the hydraulic pump and motors.

In the fifth aspect, preferably, the hydraulic pump unit is disposed between the front and rear transaxles. Alternatively, preferably, one of the front and rear transaxles is disposed between the hydraulic pump unit and the other transaxle. Therefore, for example, pipes extended from both the transaxles to the hydraulic pump unit can be efficiently concentrated so as to be effectively cooled by the cooling fan of the hydraulic pump unit. Further, due to the arrangement of one of the front and rear transaxles between the hydraulic pump unit and the other rear or front transaxle, the front and rear transaxles can approach each other so as to shorten a pipe or pipes therebetween.

In the fifth aspect, preferably, in the hydraulically driven vehicle further comprising: a mower; and a duct for transferring grass mowed by the mower, one of the front and rear transaxles is disposed laterally eccentrically toward one of left and right sides of the vehicle, and the duct is disposed laterally eccentrically toward the other right or left side of the vehicle. Alternatively, preferably, one of the front and rear transaxles is disposed above the duct, and a vertical power train is disposed on lateral outside of the duct so as to be interposed between the axle of the transaxle above the duct and an axial center shaft of a wheel driven by the axle of the transaxle above the duct. Therefore, enough capacity of the duct can be ensured so as to prevent the duct from being clogged with mowed wet grass.

These, further and other objects, features and advantages will appear more fully from the following description with reference to accompanying drawings.

BRIEF DESCRIPTION OF THE DRAWINGS

FIG. **1** is a side view of a four-wheel drive lawn tractor serving as a hydraulically driven vehicle according to a first embodiment of the present invention.

FIG. **2** is a skeleton diagram showing a hydraulic circuit and a structure for driving front and rear transaxles equipped on the vehicle of FIG. **1**, wherein the front transaxle incorporates a combination of a variable displacement hydraulic motor and a fixed displacement hydraulic motor.

FIG. **3** is a skeleton diagram showing a hydraulic circuit and a structure for driving front and rear transaxles equipped on the vehicle of FIG. **1**, wherein the front transaxle incorporates a pair of fixed displacement hydraulic motors.

FIG. **4** is a side view of a four-wheel drive lawn tractor serving as a hydraulically driven vehicle according to a second embodiment of the present invention.

FIG. **5** is a plan view of the vehicle of FIG. **4**.

FIG. **6** is a skeleton diagram showing a hydraulic circuit and a structure for driving front and rear transaxles of the vehicle of FIGS. **4** and **5**.

FIG. **7** is a side view of a four-wheel drive lawn tractor serving as a hydraulically driven vehicle according to a third embodiment of the present invention.

FIG. **8** is a plan view of the vehicle of FIG. **7**.

FIG. **9** is a sectional rear view of the vehicle of FIGS. **7** and **8**.

FIG. **10** is a front view of the front transaxle for the vehicles according to the first to third embodiments, wherein the front transaxle incorporates the combination of the variable displacement hydraulic motor and the fixed displacement hydraulic motor.

FIG. **11** is a plan view of the front transaxle.

FIG. **12** is an enlarged sectional front view of a portion of the front transaxle incorporating a motor assembly and axles.

FIG. **13** is an enlarged sectional front view of the front transaxle, showing a steerable casing thereof.

FIG. **14** is a sectional front view of a motor casing fitted into the front transaxle.

FIG. **15** is a sectional plan view of the motor casing.

FIG. **16** is a rear view of a portion of the front transaxle, showing the motor casing.

FIG. **17** is a rearwardly perspective view of the motor assembly to be disposed in the motor casing.

FIG. **18** is a front view partly in section of an inside portion of a motor cover covering a rear opening of the motor casing.

FIG. **19** is a fragmentary sectional side view of the motor casing and the motor cover supporting shafts for controlling displacement of the hydraulic motor.

FIG. **20** is a sectional side view of the motor casing, the motor cover and a pipe connector block, showing hydraulic passages for driving the hydraulic motor therein.

FIG. **21** is plan view of the four-wheel lawn tractor according to the second embodiment of the present invention, employing a system for steering rear wheels.

FIG. **22** is a rear view of the rear wheel steering system of FIG. **21**.

FIG. **23** is a rear view of another rear wheel steering system.

DETAILED DESCRIPTION OF THE INVENTION

Referring to FIGS. **1** and **2**, description will be given of a lawn tractor employing an Ackerman type front wheel steering system, serving as a hydraulically driven four-wheel drive vehicle according to a first embodiment of the present invention. The lawn tractor has a vehicle frame **3**, which supports a rear transaxle **1** below a front portion thereof. A bracket **4** is fixed onto a front bottom portion of vehicle frame **3**. A front transaxle **2** is suspended from bracket **4** via a fore-and-aft horizontal center pin **5** so that left and right ends of front transaxle **2** are vertically swingable. Rear transaxle **1** journals

left and right opposite axles **6**, which project laterally outward from rear transaxle **1** so as to be fixed at outer ends thereof to respective center portions of rear wheels **7**. Front transaxle **2** journals left and right opposite axles **8**, which project laterally outward from front transaxle **2** so as to be steerably and drivingly connected at outer ends thereof to respective center portions of front wheels **9**.

An engine **10** is vibro-isolatingly supported on a front upper portion of vehicle frame **3** via vibro-isolating rubbers or the like, and covered with a bonnet **11**. A steering wheel **12** is extended upwardly rearward at a rear end of bonnet **11**, and a speed change pedal **13** is disposed at the bottom portion of the rear end of bonnet **11**. Speed change pedal **13** is shaped like a seesaw such as to have a front portion depressed for setting forward traveling speed and a rear portion depressed for setting backward traveling speed. Speed change pedal **13** is linked to a speed change lever **14** pivoted on a casing of rear transaxle **1**. A rear cover **15** is mounted on a rear upper portion of vehicle frame **3**. A reservoir tank **28** is disposed in rear cover **15**. A driver's seat **16** is mounted on rear cover **15**.

Engine **10** has a downwardly vertical output shaft **10***a* on which pulleys **10***b* and **10***c* are fixed. An input shaft **17** (serving as a pump shaft of a later-discussed hydraulic pump P) projects upward from the casing of rear transaxle **1**. A belt **18** is interposed between a pulley **17***a* fixed on input shaft **17** and pulley **10***b* on engine output shaft **10***a*, so as to drivingly connect hydraulic pump P in rear transaxle **1** to engine **10**. Further, a cooling fan **17***b* is fixed on input shaft **17** so as to blow cooling air to the casing of rear transaxle **1**.

A mower **20** is vertically movably suspended below vehicle frame **3** between front wheels **7** and rear wheels **9**. An input pulley **20***b* is disposed on a top of mower **20**. A belt **19** is interposed between pulley **10***c* on engine output shaft **10***a* and input pulley **20***b* so as to drivingly connect a rotary blade **20***a* in mower **20** to engine **10**.

Hydraulic pump P, and hydraulic motor M**1** for driving rear wheels **7** (axles **6**) are disposed in the casing of rear transaxle **1**. On the other hand, a pair of hydraulic motors M**2** and M**3** for driving respective left and right front wheels **9** (axles **8**) are disposed in a casing of front transaxle **2**. HST fluid pipes **23** and **26** including respective intermediate flexible hydraulic fluid hoses **23***a* and **26***a* are interposed between the casings of front and rear transaxles **1** and **2** so as to constitute an HST circuit HC**1** including hydraulic pump P and hydraulic motors M**1**, M**2** and M**3**.

HST circuit HC**1** will be described with reference to FIG. **2**. The casing of rear transaxle **1** has outwardly opened HST fluid ports **1***a* and **1***b*, and the casing of front transaxle **2** has outwardly opened HST fluid ports **2***a* and **2***b*. Pipe **23** including hose **23***a* is interposed between ports **1***a* and **2***a*, and pipe **26** including hose **26***a* is interposed between ports **1***b* and **2***b*.

In the casing of rear transaxle **1**, a fluid passage **21** is interposed between hydraulic pump P and hydraulic motor M**1**, a fluid passage **27** is interposed between hydraulic pump P and port **1***b*, and a fluid passage **22** is interposed between hydraulic motor M**1** and port **1***a*.

In the casing of front transaxle **2**, hydraulic motor M**2** is fixed in displacement, and hydraulic motor M**3** is variable in displacement. In the casing of front transaxle **2**, a fluid passage **24** is extended from port **2***a* toward hydraulic motors M**2** and M**3**, and a fluid passage **25** is extended from port **2***b* toward hydraulic motors M**2** and M**3**. Fluid passage **24** bifurcates into a fluid passage **24***a* connected to hydraulic motor M**2** and a fluid passage **24***b* connected to hydraulic motor M**3**. Fluid passage **25** bifurcates into a fluid passage **25***a* connected to hydraulic motor M**2** and a fluid passage **25***b* connected to hydraulic motor M**3**.

In HST circuit HC**1**, hydraulic motor M**1** of rear transaxle **1** and the pair of hydraulic motors M**2** and M**3** of front transaxle **2** are connected in series to hydraulic pump P. Hydraulic motors M**2** and M**3** in front transaxle **2** are fluidly connected to hydraulic pump P in parallel to each other so as to be rotatable relative to each other according to conditions of load or the like.

In HST circuit HC**1**, during forward traveling of the vehicle, fluid delivered from hydraulic pump P flows through fluid passage **21**, hydraulic motor M**1**, hydraulic passage **22**, port **1***a*, pipe **23**, port **2***a*, fluid passage **24**, the pair of hydraulic motors M**2** and M**3**, fluid passage **25**, port **2***b*, pipe **26**, port **1***b*, and fluid passage **27**, so as to return to hydraulic pump P. In other words, during forward traveling of the vehicle, pressurized fluid from hydraulic pump P is supplied to hydraulic motor M**1** of rear transaxle **1** before the pair of hydraulic motors M**2** and M**3** of front transaxle **2**. During backward traveling of the vehicle, the fluid circulation route in HST circuit HC**1** is reversed, that is, pressurized fluid from hydraulic pump P is supplied to the pair of hydraulic motors M**2** and M**3** of front transaxle **2** before hydraulic motor M**1** of rear transaxle **1**.

Of course, forward traveling is more frequent than backward traveling. It is now assumed that the circulation route in HST circuit HC**1** during each of forward and backward travels is opposite to the above-mentioned route. On the assumption, when the vehicle climbing over a step is caught on the step and front wheels **9** are stuck, hydraulic motor M**1** of rear transaxle **1** cannot be supplied with fluid through hydraulic motors M**2** and M**3** of front transaxle **2**, whereby rear wheels **7** also stop. For this reason, the vehicle may stop every time it climbs over a step. Considering this problem, actual HST circuit HC**1** is constructed as mentioned above so that fluid from hydraulic pump P is supplied to hydraulic motor M**1** before hydraulic motors M**2** and M**3**. Therefore, even if front wheels are stuck, hydraulic motor M**1** is supplied with fluid from hydraulic pump P so as to drive rear wheels **7**, thereby canceling the stuck condition of front wheels **9**.

Additionally, a drive-mode setting valve may be interposed across pipes **23** and **26** between transaxles **1** and **2**. The drive-mode setting valve is opened so as to complete connection between ports **1***a* and **2***a* and between ports **1***b* and **2***b*, thereby putting the vehicle into a four-wheel drive mode where fluid from hydraulic pump P circulates through hydraulic motors M**1**, M**2** and M**3**. The drive-mode setting valve is closed so as to shut off ports **2***a* and **2***b* from ports **1***a* and **1***b*, and make a closed fluid circuit between hydraulic pump P and hydraulic motor M**1** isolated from hydraulic motors M**2** and M**3**, thereby putting the vehicle into a two-wheel drive mode where only hydraulic motor M**1** is driven by fluid supplied from hydraulic pump P.

The casings of transaxles **1** and **2** are filled with fluid so as to form respective fluid sumps therein. The casing of rear transaxle **1** is provided with a drain port **1***c* from which a drainpipe **29** is connected to reservoir tank **28**. The casing of front transaxle **2** is provided with a drain port **2***c* from which a drainpipe **30** is connected to reservoir tank **28**. Therefore, reservoir tank **28** absorbs excessively expanded fluid in the respective fluid sumps of transaxles **1** and **2**.

Rear transaxle **1** incorporates a charge pump **33** for supplying fluid to HST circuit HC**1**. As shown in FIG. **2**, charge pump **33** is preferably driven together with hydraulic pump P by input shaft **17** serving as the pump shaft of hydraulic pump P. Charge pump **33** sucks fluid from the fluid sump in the casing of rear transaxle **1** through a suction line **31** (having an

oil filter **32** at its start end). Alternatively, fluid to charge pump **33** may be introduced from reservoir tank **28** out of rear transaxle **1**.

In the casing of rear transaxle **1**, a charge fluid passage **34** is interposed between fluid passages **21** and **27** with hydraulic pump P therebetween, so as to charge fluid from charge pump **33** to hydraulically depressed one of fluid passages **21** and **27** via corresponding one of check valves **35**. Charge fluid passage **34** is connected at a portion thereof between check valves **35** and **35** to a hydraulic pressure control valve **36**, so as to drain excessive pressurized fluid via hydraulic pressure control valve **36** into the fluid sump in the casing of rear transaxle **1**. Charge fluid passage **34** is also connected at the portion thereof between check valves **35** to suction line **31** via a check valve **39**, in parallel to charge pump **33**. Check valve **39** is opened when either fluid passage **21** or **27** is hydraulically depressed to open corresponding check valve **35** so as to absorb the suction port of charge pump **33** (suction line **31**), thereby preventing cavitation in HST circuit HC**1** during straight travel of the vehicle.

In the casing of rear transaxle **1**, a differential gear unit **38** is disposed so as to differentially connect axles **6** to each other. Distal ends of axles **6** project oppositely laterally outward from the casing of rear transaxle **1** so as to be fixed to respective rear wheels **7** (alternatively, rear wheels **7** may be steerably connected to the distal ends of axles **6**, as discussed later with reference to FIG. **23**). In the casing of rear transaxle **1**, a deceleration gear train **37** is interposed between a motor shaft M**1***a* of hydraulic motor M**1** and differential gear unit **38**. In this way, rear transaxle **1** drives hydraulic motor M**1** for driving both rear drive wheels **7** by pressurized fluid supplied from hydraulic pump P. Hydraulic pump P is provided with a movable swash plate Pa (see FIG. **2**) linked with a speed change lever **14** (see FIG. **1**) pivoted on the casing of rear transaxle **1**. By depression of speed change pedal **13**, movable swash plate Pa is set in direction and angle so as to set the fluid delivery direction and amount of hydraulic pump P, thereby setting the rotary direction and speed of rear wheels **7**.

Description will now be given on peripheral speed setting of rear wheels **7** and front wheels **9** depending on the output rotary speed setting of hydraulic motor M**1** and the pair of hydraulic motors M**2** and M**3**, and design of HST circuit HC**1** in correspondence to the peripheral speed setting of wheels **7** and **9**. In a general manner, hydraulic motor M**1** and hydraulic motors M**2** and M**3** would be set in output rotary speed so as to equalize peripheral speeds of rear wheels **7** to those of front wheels **9** during straight travel of the vehicle. However, if the setting is excessively strict, peripheral speed difference between rear wheels **7** and front wheels **9** due to road conditions causes stiff travel of the vehicle. That is, on one occasion, the peripheral speeds of rear wheels **7** exceed those of front wheels **9** (i.e., the peripheral speeds of front wheels **9** become lower than those corresponding to the set output of hydraulic motors M**2** and M**3**), so as to cause a condition where front wheels **9** rotate following rotation of rear wheels **7**. On another occasion, the peripheral speeds of front wheels **9** exceed those of rear wheels **7** (i.e., the peripheral speeds of rear wheels **7** become lower than those corresponding to the set output of hydraulic motor M**1**), so as to cause a condition where rear wheels **7** rotate following rotation of front wheels **9**.

Therefore, the output rotary speeds of hydraulic motors M**1**, M**2** and M**3** are actually set so that, during straight travel of the vehicle, peripheral speeds of rear wheels **7** strictly exceed those of front wheels **9**. Due to this setting, front wheels **9** almost constantly rotate following rotation of rear wheels **7**. Even if the slowing-down degree of rear wheels **7** is considerably large (the peripheral speeds of rear wheels **7** is considerably reduced to be lower than those corresponding to the set output of hydraulic motor M**1**), peripheral speeds of rear wheels **7** is still larger than peripheral speeds of front wheels **9**, or equal to peripheral speeds of front wheels **9**. Even if the reduced peripheral speeds of rear wheels **7** become lower than the peripheral speeds of front wheels **9**, the major case is that the peripheral speed difference between rear wheels **7** and front wheels **9** is still small so that rear wheels **7** are rotated with a little assistance of front wheels **9**, and the difference of reduced peripheral speeds of rear wheels **7** from peripheral speeds of front wheels **9** hardly becomes sincerely large. Consequently, the vehicle is substantially prevented from stiffly traveling.

However, due to the output speed setting of hydraulic motors M**1**, M**2** and M**3** for making peripheral speeds of rear wheels **7** exceed peripheral speeds of front wheels **9**, i.e., for rotating front wheels **9** following rotation of rear wheels **7**, hydraulic motors M**2** and M**3** receive opposite torque from respective axles **8** so as to act as pumps. Consequently, primary (suction) ports of hydraulic motors M**2** and M**3** are hydraulically depressed. This phenomenon remarkably happens during turning of the vehicle, especially during sharp turning of the vehicle, thereby causing cavitation in the HST circuit, and causing hunting of the vehicle. Therefore, HST circuit HC**1** includes a check valve disposed on the suction side fluid passage of the pair of hydraulic motors M**2** and M**3** so as to introduce fluid from the outside of HST circuit HC**1** into HST circuit HC**1**. During forward travel of the vehicle, the suction side fluid passage comprises fluid passages **22** to **24***a* and **24***b* between hydraulic motor M**1** and the pair of hydraulic motors M**2** and M**3**. During backward travel of the vehicle, the suction side fluid passage comprises fluid passages **21** to **25***a* and **25***b* between hydraulic motor M**1** and the pair of hydraulic motors M**2** and M**3** through hydraulic pump P. In the embodiment of FIG. **2**, in front transaxle **2**, a check valve **40** is connected to fluid passage **24***a* so as to introduce fluid from the fluid sump in the casing of front transaxle **2** to the suction side fluid passage of the pair of hydraulic motors M**2** and M**3** during forward travel of the vehicle. An oil filter **40***a* is interposed between check valve **40** and fluid passage **24***a*. On the other hand, in rear transaxle **1**, the above-mentioned check valve **39** is provided for introducing fluid from the fluid sump in the casing of rear transaxle **1** to the suction side fluid passage of the pair of hydraulic motors M**2** and M**3** during backward travel of the vehicle.

Alternatively, check valve **40** to be opened during forward travel of the vehicle may be connected to fluid passage **24** or **24***b* in front transaxle **2**. Alternatively, a check valve for absorbing fluid from the fluid sump in the casing of rear transaxle **1** may be connected to fluid passage **22** in rear transaxle **1** so as to have the same effect as check valve **40**. On the other hand, in stead of check valve **39** in rear transaxle **1**, a check valve may be connected to fluid passage **25**, **25***a* or **25***b* in front transaxle **2** so as to introduce fluid from the fluid sump in the casing of front transaxle **2** to the suction side fluid passage of the pair of hydraulic motors M**2** and M**3** during backward travel of the vehicle.

In association with the peripheral speed setting such that peripheral speeds of rear wheels **7** exceed peripheral speeds of front wheels **9** during straight travel of the vehicle, fluid circulates in HST circuit HC **1** during forward travel of the vehicle so as to flow from hydraulic pump P to the pair of hydraulic motors M**2** and M**3** through hydraulic motor M**1**. Therefore, during forward climbing a slope, rear wheels **9** can be effectively rotated for smooth climbing of the vehicle over a slope, because hydraulic motor M**1** for driving rear wheels

7 weighed more than front wheels 9 is effectively supplied with fluid from hydraulic pump P before the pair of hydraulic motors M2 and M3 is supplied.

However, during forward descending a slope, front wheels 9 weighed more than rear wheels 7 require larger driving force than that for rear wheels 7.

If the forward descending on a slope is more important than the forward ascending on a slope, the circulation route in HST circuit HC1 may be reversed so that, during forward travel of the vehicle, fluid from hydraulic pump P is supplied to hydraulic motor M1 through the pair of hydraulic motors M2 and M3.

Due to the above output setting of hydraulic motors M1, M2 and M3 and construction of HST circuit HC1, front wheels 9 receive driving forces from hydraulic motors M2 and M3 with the assistance of rotation of rear wheels 7. Therefore, the vehicle can travel straight without stiff movement, and the operation force required for steering front wheels 9 can be lightened so as to enable the vehicle to turn smoothly with the feeling of almost two-wheel drive mode travel. It may be said that acceleration of the forward wheels during turning of the vehicle is unnecessary. Due to this theory, as shown in FIG. 3, both of the hydraulic motors in front transaxle 2 for driving respective axles 8 may be fixed displacement hydraulic motors M2. In this case, fixed displacement hydraulic motors M2 of front transaxle 2 are fluidly connected to common hydraulic pump P in parallel to each other, and in series with hydraulic motor M1, so as to make peripheral speeds of rear wheels 7 slightly exceed or equal to peripheral speeds of front wheels 9 during straight travel of the vehicle. Check valve 40 is provided for introducing fluid from the fluid sump in front transaxle 2 to the suction side passage (in FIG. 3, fluid passage 24*a*) of the pair of hydraulic motors M2 in HST circuit HC1. Due to this construction, a later-discussed link mechanism for changing the displacement of the hydraulic motor is unnecessary.

Referring to FIGS. 4, 5 and 6, an Ackerman-type steering lawn tractor serving as a four-wheel drive vehicle equipped with a hydraulic transaxle according to a second embodiment of the present invention will be described. The lawn tractor has vehicle frame 3 supporting a rear transaxle 101 at a rear portion thereof, and front transaxle 2 at a front portion thereof. A pump unit 50 and reservoir tank 28 are laterally juxtaposed and supported by vehicle frame 3 just in front of rear transaxle 101. Preferably, similar to the vehicle of FIG. 1, the present vehicle includes bracket 4 fixed on a front end portion of vehicle frame 3, and fore-and-aft horizontal center pin 5 pivoted on bracket 4 for rotatably suspending front transaxle 2 therefrom. Rear transaxle 101 supports left and right axles 6 whose outer ends are fixed to the center portions of respective rear wheels 7 (alternatively, steerably connected to respective rear wheels 7, as discussed later). Front transaxle 2 supports left and right axles 8 to which respective front wheels 9 (serving as steerable second drive wheels) are vertically swingably and drivingly connected.

Engine 10 is vibro-isolatingly supported on vehicle frame 3 via vibro-isolating rubbers or the like. Pulley 10*b* is fixed on output shaft 10*a* of engine 10. Input shaft 17 serves as the pump shaft of hydraulic pump P in the casing of pump unit 50. Input shaft 17 projects upward from a casing of pump unit 50 so as to be fixedly provided thereon with pulley 17*a*. Belt 18 is interposed between pulleys 10*b* and 17*a* so as to drivingly connect hydraulic pump P to engine 10. Cooling fan 17*b* is fixed on input shaft 17 above the casing of pump unit 50 so as to blow cooling air to the casing of pump unit 50 and reservoir tank 28 adjacent to the casing of pump unit 50. Pipes 51, 123 and 126, constituting a later-discussed HST circuit HC2, and drainpipes 52, 129 and 30 connected to reservoir tank 28 are partly disposed in an area blown by cooling wind generated from cooling fan 17*b* so as to enhance the effect of cooling fluid therein.

Pump unit 50 also obtains the vibro-isolating effect of engine 10 against vehicle frame 3. More specifically, pump unit 50 is vibro-isolatingly supported together with engine 10 onto vehicle frame 3. To get such vibro-isolating effect, engine output shaft 10*a* may be coaxially and integrally rotatably connected to input shaft 17, or single engine output shaft 10*a* may be extended so as to serve as input shaft 17 of pump unit 50.

Variable displacement hydraulic pump P in pump unit 50 is provided with movable swash plate Pa linked to speed change lever 14 pivoted on the casing of pump unit 50, and speed change lever 14 is linked to speed change pedal 13. By depression of speed change pedal 13, movable swash plate Pa is set in direction and angle so as to set the fluid delivery direction and amount of hydraulic pump P.

Mower 20 is disposed below vehicle frame 3 between front wheels 9 and rear wheels 7. Rotary blade 20*a* in mower 20 is drivingly connected to engine 10 via power transmission means, e.g., a belt transmission, such as the belt transmission of the vehicle shown in FIG. 1 including pulleys 10*c* and 20*b* and belt 19.

A duct 92 is extended rearward from mower 20 so as to send grass mowed by rotary blade 20*a*. Rear transaxle 101 having no hydraulic pump is vertically and laterally slimed. Such rear transaxle 101 is laterally eccentrically disposed toward one of left and right sides of the vehicle (in this embodiment, leftward) so as to ensure a large space for duct 92 on the other right or left side of the vehicle (in this embodiment, right side). Therefore, duct 92 can have such a large capacity as to prevent wet grass from clogging therein.

Further, as shown in FIG. 5, pump unit 50 and reservoir tank 28 are aligned in the fore-and-aft direction on one of left and right sides of the vehicle along one side surface of duct 92, so as to increase the capacity of duct 92, and to compactly collect fluid pipes including pipe 126.

Cooling fan 17*b* fixed on a bottom end of input shaft 17 of pump unit 50 blows upward cooling wind to adjoining pump unit 50 and reservoir tank 28 and fluid pipes so as to cool fluid therein. Additionally, as drawn in phantom lines, input shaft 17 may be extended upward from pump unit 50 so as to be provided thereon with another cooling fan 17*b* for blowing downward cooling wind. In this case, vehicle frame 3 is opened to lead the downward cooling wind to pipes.

Hydraulic motor M1 for driving rear wheels 7 (axles 6) are disposed in the casing of rear transaxle 101. On the other hand, a pair of hydraulic motors M2 and M3 for driving respective left and right front wheels 9 (axles 8) are disposed in the casing of front transaxle 2. An HST fluid pipe 51 is interposed between pump unit 50 and rear transaxle 101, an HST fluid pipe 123 between rear transaxle 101 and front transaxle 2, and an HST fluid pipe 126 between front transaxle 2 and pump unit 50, thereby constituting HST circuit HC2. Pipes 123 and 126 may be provided at intermediate portions thereof with flexible hoses, respectively, similar to fluid pipes 23 and 26 including flexible hoses 23*a* and 26*a* in the vehicle according to the first embodiment as shown in FIG. 1.

HST circuit HC2 will be described with reference to FIG. 6. The casing of pump unit 50 has outwardly opened HST fluid ports 50*a* and 50*b*, the casing of rear transaxle 101 has outwardly opened HST fluid ports 101*a* and 101*b*, and the casing of front transaxle 2 has outwardly opened HST fluid ports 2*a* and 2*b*. Pipe 51 is interposed between ports 50*a* and

101*a*, pipe **123** is interposed between ports **101***b* and **2***a*, and pipe **126** is interposed between ports **2***b* and **50***b*.

In the casing of pump unit **50** incorporates common hydraulic pump P for supplying fluid to hydraulic motors M**1**, M**2** and M**3**. In the casing of pump unit **50**, a fluid passage **121***a* is extended from hydraulic pump P to port **50***a*, and a fluid passage **127** from hydraulic pump P to port **50***b*. In the casing of rear transaxle **101**, a fluid passage **121***b* is extended from hydraulic motor M**1** to port **101***a*, and a fluid passage **122** from hydraulic motor M**1** to port **10***b*. Fluid passages **121***a* and **121***b* and pipe **51** constitute a fluid passage **121** between hydraulic pump P and hydraulic motor M**1**.

Similar to front transaxle **2** of the vehicle shown in FIG. **1**, in the casing of the present front transaxle **2**, fixed displacement hydraulic motor M**2** for driving one front wheel **9** and variable displacement hydraulic motor M**3** for driving the other front wheel **9** are disposed, fluid passages **24**, **24***a* and **24***b* are interposed between port **2***a* and the pair of hydraulic motors M**2** and M**3**, and fluid passages **25**, **25***a* and **25***b* between port **2***b* and the pair of hydraulic motors M**2** and M**3**.

In HST circuit HC**2**, hydraulic motor M**1** of rear transaxle **101** and the pair of hydraulic motors M**2** and M**3** of front transaxle **2** are connected in series to hydraulic pump P. Hydraulic motors M**2** and M**3** in front transaxle **2** are fluidly connected to hydraulic pump P in parallel to each other.

In HST circuit HC**1**, during forward traveling of the vehicle, fluid delivered from hydraulic pump P flows through fluid passage **121** (i.e., fluid passage **121***a*, pipe **51** and fluid passage **121***b*), hydraulic motor M**1**, hydraulic passage **122**, outwardly opened port **101***b*, pipe **123**, outwardly opened port **2***a*, fluid passage **24**, the pair of hydraulic motors M**2** and M**3**, fluid passage **25**, outwardly opened port **2***b*, pipe **126**, outwardly opened port **50***b*, and fluid passage **127**, so as to return to hydraulic pump P. In other words, during forward travel of the vehicle, pressurized fluid from hydraulic pump P is supplied to hydraulic motor M**1** of rear transaxle **1** before the pair of hydraulic motors M**2** and M**3** of front transaxle **2**. During backward travel of the vehicle, the fluid circulation route in HST circuit HC**2** is reversed, that is, pressurized fluid from hydraulic pump P is supplied to the pair of hydraulic motors M**2** and M**3** of front transaxle **2** before hydraulic motor M**1** of rear transaxle **1**.

Such circulation route of HST circuit HC**2** is set for the same reason as the circulation route setting of HST circuit HC**1** of the vehicle shown in FIGS. **1** and **2** (and FIG. **3**).

Additionally, a drive-mode setting valve for switching drive mode of the vehicle between four-wheel drive mode and two-wheel drive mode may be interposed between hydraulic motor M**1** and the pair of hydraulic motors M**2** and M**3** in HST circuit HC**2**.

The casings of pump unit **50** and transaxles **1** and **2** are filled with fluid so as to form respective fluid sumps therein. As shown in FIG. **6**, the casing of pump unit **50** is provided with a drain port **50***c* from which a drainpipe **52** is connected to reservoir tank **28**. The casing of rear transaxle **101** is provided with a drain port **101***c* from which a drainpipe **129** is connected to reservoir tank **28**. The casing of front transaxle **2** is provided with drain port **2***c* from which drainpipe **30** is connected to reservoir tank **28**. Therefore, reservoir tank **28** absorbs excessively expanded fluid in the respective fluid sumps of pump unit **50** and transaxles **101** and **2**.

Pump unit **50** incorporates charge pump **33** for supplying fluid to HST circuit HC**2**. As shown in FIG. **6**, charge pump **33** is preferably driven together with hydraulic pump P by input shaft **17** serving as the pump shaft of hydraulic pump P. Pump unit **50** is provided with a charge pump port **50***d*. A charge pipe **131** including an intermediate oil filter **132** is interposed between reservoir tank **28** and charge pump port **50***d*, so as to introduce fluid from reservoir tank **28** to charge pump **33**.

In the casing of pump unit **50**, charge fluid passage **34** is interposed between fluid passages **121***a* and **127** with hydraulic pump P therebetween, so as to charge fluid from charge pump **33** to hydraulically depressed one of fluid passages **121** and **127** via corresponding one of check valves **35**. Charge fluid passage **34** is connected at a portion thereof between check valves **35** and **35** to hydraulic pressure control valve **36**, so as to drain excessive pressurized fluid via hydraulic pressure control valve **36** into the fluid sump in the casing of pump unit **50**. Check valve **39** for preventing cavitation is interposed between charge fluid passage **34** and hydraulic pressure control valve **36** so as to bypass one of check valves **35**.

Similar to rear transaxle **1** of the vehicle shown in FIGS. **1** and **2**, rear transaxle **101** incorporates differential gear unit **38** for mutually differentially connecting axles **6**, and deceleration gear train **37** interposed between motor shaft M**1***a* of hydraulic motor M**1** and differential gear unit **38**.

As the vehicle shown in FIGS. **1** and **2**, the present vehicle shown in FIGS. **4**, **5** and **6** has the same relative peripheral speed setting of rear wheels **7** and front wheels **9**, and the same output rotary speed of hydraulic motor M**1**, M**2** and M**3** for ensuring the relative peripheral speed setting of rear wheels **7** and front wheels **9**. Further, similar to HST circuit HC**1**, HST circuit HC**2** is provided with check valves for compensation of fluid reduced by the output rotary speed setting of hydraulic motors M**1**, M**2** and M**3**. More specifically, peripheral speeds of rear wheels **7** exceed or are equal to peripheral speeds of front wheels **9** during straight travel of the vehicle. A check valve for introducing fluid into HST circuit HC**2**, e.g., check valve **40** in front transaxle **2** as shown in FIG. **6**, is connected to the suction side fluid passage of the pair of hydraulic motors M**2** and M**3**. Alternatively, the vehicle of FIGS. **4**, **5** and **6** with HST circuit HC**2** may be provided with fixed displacement hydraulic motors M**2** serving as the pair of hydraulic motors in front transaxle **2**, similar to that shown in FIG. **3**.

Referring to FIGS. **7**, **8** and **9**, an Ackerman-type steering lawn tractor serving as a four-wheel drive vehicle equipped with a hydraulic transaxle according to a third embodiment of the present invention will be described. In the present lawn tractor, pump unit **50** incorporating hydraulic pump P is separated from rear transaxle **101** incorporating hydraulic motor M**1**, similar to those in the lawn tractor of the second embodiment. The different point of the present vehicle from the vehicle of the second embodiment is that a duct **192** is extended rearward from mower **20** at the lateral center of the vehicle.

Separated pump unit **50** and rear transaxle **101** are so compact as to be distributed on vehicle frame **3** while ensuring sufficient capacity in duct **192**. In the present embodiment, pump unit **50** and reservoir tank **28** are laterally juxtaposed on vehicle frame **3** just in front of duct **192**, and rear transaxle **101** is supported on vehicle frame **3** just above a fore-and-aft intermediate portion of duct **192**. Cooling fan **17***b* fixed on a bottom end of input shaft **17** of pump unit **50** blows upward cooling wind to adjoining pump unit **50** and reservoir tank **28** and fluid pipes so as to cool fluid therein. Additionally, as drawn in phantom lines, input shaft **17** may be extended upward from pump unit **50** so as to be provided thereon with another cooling fan **17***b* for blowing downward cooling wind. In this case, vehicle frame **3** is opened to lead the downward cooling wind to pipes. Rear transaxle **101** may be disposed on vehicle frame **3** in front or rear of pump unit **50**. Especially, as shown in FIG. **7**, rear transaxle **101** may be disposed so as to have a bottom surface thereof sloped along

a sloped upper surface of duct **192**, thereby approaching pump unit **50** and reducing a dead space. This is appropriate for a small size vehicle. Another effect of rear transaxle **101** disposed at such a high position on vehicle frame **3** is that a space in rear cover **15** can be used for locating a portion of rear transaxle **101** projecting upward from vehicle frame **3**.

Rear transaxle **101** has left and right rear-wheel-driving output shafts **106** which are differentially connected to each other by differential gear unit **38** and extended oppositely outward from the casing of rear transaxle **1**. As shown in FIGS. **8** and **9**, left and right chain casings **108** are disposed at left and right outsides of duct **192**. Outer ends of output shafts **106** are inserted into upper portions of respective chain casings **108**, and sprockets **106***a* are fixed on the outer ends of respective output shafts **106** in respective chain casings **108**. When viewed in front or rear, left and right output shafts **106** and chain casings **108** look like a gate.

Left and right rear wheels **7** has respective axles **107** extended laterally proximally of the vehicle. Axles **107** are inserted into lower portions of respective chain casings **108**, and sprockets **107***a* are fixed on the proximal ends of respective axles **107** in respective chain casings **108**. In each of chain casings **108**, a chain **109** is interposed between sprockets **106***a* and **107***a* so as to transmit the driving force of output shaft **106** to axle **107**, thereby driving left and right rear wheels **7**.

A drive system of the present vehicle is represented by the description of drive system of the vehicle according to the second embodiment with reference to FIG. **6**, except that the chain transmissions are interposed between differential gear unit **38** and respective rear wheels **7**. Alternatively, both the hydraulic motors in front transaxle **2** may be fixed displacement hydraulic motors M**2**.

Front transaxle **2** incorporating fixed displacement hydraulic motor M**2** and variable displacement hydraulic motor M**3** will be described with reference to FIGS. **1**, **2** and **4** to **20**.

Referring to a casing structure of front transaxle **2**, as shown in FIGS. **10** to **12**, a motor casing **201** is disposed between left and right axle casings **203**, and detachably attached to each axle casing **203**. Axle casings **203** incorporate respective axles **8**. A spacer may be interposed between motor casing **201** and any of axle casings **203**, if a tread between front wheels **9** has to be lengthened. Kingpin casings **204** are fixed on distal ends of respective axle casings **203**, extended laterally outwardly downward at kingpin angles, and inserted into respective steerable casings **205**. Steerable casings **205** are rotatable centered on the axes of respective kingpin casings **204**.

As shown in FIGS. **11** and **15**, motor casing **201** is opened at a rear end thereof. A motor cover **202**, onto which a assembly of hydraulic motors M**2** and M**3** (motor assembly) are attached as shown in FIG. **17**, is fitted to the rear end of motor casing **201** so as to cover the rear opening of motor casing **201**, thereby setting hydraulic motors M**2** and M**3** in motor casing **201**. Motor casing **201** can be removed from motor casing **202** so as to easily take out the assembly of hydraulic motors M**2** and M**3** from motor casing **201**, thereby facilitating maintenance of hydraulic motors M**2** and M**3**.

The motor assembly will be described with reference to FIGS. **14**, **15**, **17** and others. Each of hydraulic motors M**2** and M**3** comprises: a horizontal motor shaft **61** to be drivingly connected to corresponding axle **8**; a cylinder block **62** which is rotatable together with motor shaft **61** centered on the axis of motor shaft **61**; and horizontal pistons **63** reciprocally slidably fitted in respective cylinder holes of cylinder block **62** around motor shaft **61**. Cylinder blocks **62** of hydraulic motors M**2** and M**3** are slidably rotatably fitted onto a center section **60** disposed between cylinder blocks **62**.

As best shown in FIGS. **12**, **17** and **20**, a pair of parallel fluid passages **60***a* and **60***b* are bored in center section **60** so as to be extended in the fore-and-aft direction and opened rearward. Fluid passages **60***a* and **60***b* serve as respective fluid passages **24** and **25** in each of HST circuit HC**1** shown in FIG. **2** and HST circuit HC**2** shown in FIG. **6**. As best shown in FIGS. **15** and **20**, a pair of kidney ports **60***c* and **60***d* laterally penetrate center section **60** so as to be opened at left and right ends thereof to the cylinder holes of respective cylinder blocks **62**. Fluid passage **60***a* is connected to kidney port **60***c*, and fluid passage **60***b* to kidney port **60***d*. Therefore, kidney port **60***c* serves as bifurcating fluid passages **24***a* and **24***b*, and kidney port **60***d* serves as bifurcating fluid passages **25***a* and **25***b*. Center section **60** is penetrated between kidney ports **60***c* and **60***d* by a laterally horizontal shaft hole **60***e*, into which proximal end portions of motor shafts **61** are slidably rotatably fitted. Further, a fluid drain passage **60***f* is bored in center section **60**. Fluid drain passage **60***f* is opened at one end thereof to a portion of shaft hole **60***e* between the proximal ends of motor shafts **61**, and be opened at the other end thereof outward from center section **60** to the fluid sump in motor casing **201**, thereby fluidly connecting shaft hole **60***e* to the fluid sump in motor casing **201**. As shown in FIG. **14**, in shaft hole **60***e*, a bush **61***a* (or a needle bearing) is interposed between center section **60** and motor shafts **61** so as to reduce frictional resistance to motor shafts **61**, thereby improving mechanical efficiency of rotation of motor shafts **61**.

As shown in FIGS. **12**, **14**, **15** and **17**, each of hydraulic motors M**2** and M**3** has a thrust bearing **64** pressed against heads of pistons **63**. Thrust bearing **64** of fixed displacement hydraulic motor M**2** is positionally fixed in a fixed swash plate support **65**, thereby serving as a fixed swash plate (hereinafter referred to as "fixed swash plate **64**"). Some fixed swash plate supports **65** having different slant angles may be prepared for optional setting of slant angle fixed swash plate **64** of hydraulic motor M**2**. Variable displacement hydraulic motor M**3** has a movable swash plate **67**, which is rotatably supported by a movable swash plate support **66** so that its tilt angle relative to movable swash plate support **66** can be changed. Thrust bearing **64** of hydraulic motor M**3** is integrally assembled in movable swash plate **67**.

To fix the motor assembly to an inside (front) surface of motor cover **202**, as best shown in FIG. **17**, bolts **68** project rearward from rear end surfaces of respective swash plate supports **65** and **66**. A bolt hole **60***g* is bored in center section **60** and opened at the rear end surface of center section **60**. Swash plate supports **65** and **66** are fastened to motor cover **202** by bolts **68**, and center section **60** is fastened to motor cover **202** by a bolt **96** (see FIG. **18**) screwed into bolt hole **60***g*. Additionally, a knock pin **69** for locating motor cover **202** projects rearward from the rear end surface of center section **60**.

As best shown in FIG. **15**, rearwardly opened front joggle holes are bored in a front wall of motor casing **201**. Forwardly opened rear joggle holes are bored in center section **60** and swash plate supports **65** and **66**, respectively. When the motor assembly is inserted into motor casing **201**, the rear joggle holes of center section **60** and swash plate supports **65** and **66** coincide to the respective front joggle holes of motor casing **201** with respective joggles **93** fitted between the coinciding front and rear joggle holes, thereby retaining center section **60** and swash plate supports **65** and **66** to motor casing **201** onto the front wall of motor casing **201**. In this state, motor cover **202** is fitted to motor casing **201** so as to cover the rear opening of motor casing **201**. Then, bolts **95** are screwed

forward together with motor cover **202** into motor casing **201**, thereby completing setting of the motor assembly.

Motor cover **202** with the motor assembly in motor casing **201** is fixedly provided with a pipe coupling block **70** on the rear surface thereof just in rear of center section **60**. Pipe coupling block **70** is bored by fluid passages **70***c* and **70***d*, which are opened to respective fluid passages **60***a* and **60***b* via respective fluid passages **202***a* and **202***b* penetrating motor cover **202**. Pipe couplings **70***a* and **70***b* are disposed at outer ends of respective fluid passages **70***c* and **70***d*, and project outward from pipe coupling block **70**. Pipe couplings **70***a* and **70***b* serve as fluid ports **2***a* and **2***b* of each of HST circuits HC**1** and HC**2** shown in FIGS. **2** and **6**. The series of fluid passages **70***c*, **202***a* and **60***a* serves as fluid passage **24**. The series of fluid passages **70***d*, **202***b* and **60***b* serves as fluid passage **25**.

In comparison with the case where pipe couplings **70***a* and **70***b* are directly attached to motor cover **202**, pipe coupling block **70** with pipe couplings **70***a* and **70***b* is advantageous in increasing angle variation of pipe couplings **70***a* and **70***b* relative to fluid passages **60***a* and **60***b* and the like serving as fluid passages **24** and **25**. Therefore, pipe coupling block **70** with pipe couplings **70***a* and **70***b* can be designed so that angles of pipes **23** (or **123**) and **26** (or **126**) coupled to respective pipe couplings **70***a* and **70***b* are optimized in relation to a later-discussed linkage for controlling the swash plate of hydraulic motor M**3**.

Alternatively, pipe coupling block **70** may be separated from motor cover **202** and supported on vehicle frame **3** or the like, so as to have pipes between pipe coupling block **70** and motor cover **202**.

As shown in FIGS. **11**, **15** and **16**, a pipe coupling **71**, serving as drain port **2***c* of each of HST circuits HC**1** and HC**2** shown in FIGS. **2** and **6**, projects from the rear end surface of motor cover **202** adjacent to pipe coupling block **70** so as to be connected to reservoir tank **28** via drainpipe **30**. As shown in FIG. **18**, a drain hole **202***c* is bored through motor cover **202** between pipe coupling **71** and the fluid sump in motor casing **201**. Therefore, excessively expanded fluid in the fluid sump in motor casing **201** can be drained to reservoir tank **28**. Pipe coupling **71** is disposed in a space behind fixed displacement hydraulic motor M**2**, where the linkage for controlling the displacement of hydraulic motor M**3** is not disposed.

As shown in FIG. **20**, above-mentioned check valve **40** is disposed in center section **60** so as to be connected to kidney port **60***c* serving as a part of fluid passage **24** (and fluid passages **24***a* and **24***b*) which is hydraulically higher-pressurized in each of HST circuits HC**1** and HC**2** during forward travel of the vehicle. If kidney port **60***c*, i.e., fluid passage **24** is hydraulically depressed, check valve **40** is opened to introduce fluid from the fluid sump in motor casing **201** into fluid passage **24**. Check valve **40** is provided with an oil filter **40***a* interposed between check valve **40** and kidney port **60***c*.

The linkage for controlling the displacement of hydraulic motor M**3** will be described. As shown in FIGS. **15**, **16** and **17**, a fore-and-aft horizontal swash plate pivot shaft **73** is pivoted onto motor cover **202** in rear of hydraulic motor M**3**. In motor casing **201**, an inner arm **74** is fixed on an inner (front) end of swash plate pivot shaft **73** and engages with movable swash plate **67** of hydraulic motor M**3**. In motor casing **201**, a spring **75** is wound around swash plate pivot shaft **73** so as to return swash plate pivot shaft **73** and inner arm **74** to their initial position (that is, the swash plate angle setting position during straight travel of the vehicle).

As shown in FIGS. **18** and **19**, inner arm **74** has a projection **74***a* fitted to swash plate **67**. A pushpin **74***b* projects from inner arm **74**. One end of spring **75** is constantly pressed against an inner surface of a wall of motor casing **202** so as to be retained. During turning of the vehicle, inner arm **74** is rotated for changing the displacement of hydraulic motor M**3** so that pushpin **74***b* pushes the other end of spring **75** away from the retained end of spring **75**, whereby spring **75** generates biasing force for returning inner arm **74** to the initial position. A stopper pin **76** is planted into a wall of motor casing **202** so as to abut against inner arm **74** disposed at the initial position. Stopper pin **76** is an eccentric pin, which is usually fastened to motor casing **202** by a nut **76***b*. By loosening nut **76***b* and revolving stopper pin **76** around its center axis portion **76***a*, the relative position of stopper pin **76** to inner arm **74** can be adjusted so as to adjust the initial position of inner arm **74** and swash plate pivot shaft **73**, thereby canceling positional error of inner arm **74** and swash plate pivot shaft **73** relative to the initial slant angle position of swash plate **67**.

As shown in FIGS. **11**, **15**, **16** and **18**, a camshaft **80** is disposed in parallel to swash plate pivot shaft **73**, and pivoted onto motor cover **202** on one of left and right sides of swash plate pivot shaft **73** (preferably, leftwardly or rightwardly outward from hydraulic motor M**3**) adjacent to swash plate pivot shaft **73**. A cam plate **81** is fixed on an outer (rear) end of camshaft **80** on the outside of (in rear of) motor cover **202**. Cam plate **81** has a pair of cam profiles **81***a* above camshaft **80**. An upper edge of cam plate **81** between cam profiles **81***a* is disposed horizontally when cam plate **81** is disposed at the initial position. On the outside (in rear) of motor cover **202**, an outer arm **77** is fixed on an outer (rear) end of swash plate pivot shaft **73**. A pressure plate **78** is fixed on outer arm **77** so as to be pressed at a bottom edge thereof against the upper edge of cam plate **81**.

Pressure plate **78** is fastened to outer arm **77** so as to be shiftable relative to outer arm **77**, so that, when cam plate **81** is disposed at the initial position, the bottom edge of pressure plate **78** is disposed horizontally to abut against the upper edge of cam plate **81** regardless of the initial position of swash plate pivot shaft **73** with inner and outer arms **74** and **77** adjusted by stopper pin **76**. In this regard, outer arm **77** is bored by a pair of bolt holes. One of the bolt holes is disposed toward a tip of outer arm **77**, and the other toward a basal end of outer arm **77**. As shown in FIG. **16**, a pair of bolts **79** screwed into the respective bolt holes of outer arm **77** are passed through respective slots **78***a* and **78***b* bored in pressure plate **78**. Nuts are screwed on respective bolts **79** so as to fasten outer arm **77** and pressure plate **78** together. By loosening the nuts and adjusting positions of bolts **79** in slots **78***a* and **78***b*, the position of pressure plate **78** relative to outer arm **77** can be adjusted. Due to this construction, the present linkage for controlling the displacement of hydraulic motor M**3** can be adapted to various vehicles having different steering angle settings.

Cam plate **81** is extended downward from camshaft **80**. An acceleration rod **82** is pivotally connected at one end thereof to a bottom end of downwardly extended cam plate **81**. Acceleration rod **82** is pivoted at the other end thereof onto one of left and right steerable casings **205**. Preferably, the other end of acceleration rod **82** is pivoted onto a pivot pin **83** (as best shown in FIGS. **10** and **11**), which is planted into a wall of steerable casing **205** supporting front wheel **9** drivingly connected to variable displacement hydraulic motor M**3**. In this way, steered steerable casings **205** are rotated leftward or rightward centered on respective kingpin casings **203** so as to push or pull acceleration rod **82**, thereby swinging the bottom end of cam plate **81** leftward or rightward. Accordingly, the upper edge of cam plate **81** is slanted so that one of cam profiles **81***a* rises to push up pressure plate **78**. Consequently, outer arm **77** are rotated upward so as to integrally rotate

swash plate pivot shaft **73** and inner arm **74**, thereby reducing the tilt angle of swash plate **67** of hydraulic motor M**3**.

As shown in FIGS. **10** and **11**, acceleration rod **82** has an intermediate spline collar **82***a* so as to be telescoped in correspondence to the above-mentioned tread adjustment by interposition of a spacer between motor casing **201** and any of axle casings **203**.

In this way, the cam system including cam plate **81** and pressure plate **78** abutting against each other, and arms **77** and **74** connected to pressure plate **78** so as to rotate integrally with movable swash plate **67** constitute the linkage for moving swash plate **67** of hydraulic motor M**3** according to lateral rotation of steerable casings **205** during turning of the vehicle. The linkage is disposed on the outer surface of motor cover **202** in rear of variable displacement hydraulic motor M**3**. Pipe coupling block **70** is disposed on the outer surface of motor cover **202** in rear of the portion between hydraulic motors M**2** and M**3** adjacent to the linkage.

It is now assumed that both the hydraulic motors in front transaxle **2** are variable displacement hydraulic motors M**3**. The linkage must have a cam system for converting the push-and-pull movement of a rod for the lateral rotation of steerable casings **205** into rotation of movable swash plates **67** of both hydraulic motors M**3**. Therefore, the linkage must be complicated and large so as to substantially entirely cover the outer surface of motor cover **202** (the rear surface of front transaxle **2**) in the left-and-right direction. Accordingly, a port member having ports for fluidly connecting both hydraulic motors M**3** to hydraulic pump P and motor M**1** (such as pipe coupling block **70**) has to be disposed on a surface of rear transaxle **2**, which is different from the outer surface of motor cover **202**. For instance, the port member has to be attached to the front surface of front transaxle **2** opposite to the outer surface of motor cover **202**. Pipes to be connected to the port member have to be extended along or beyond motor casing **201**.

However, in front transaxle **2** of the present embodiment, one of the pair of hydraulic motors therein is fixed displacement hydraulic motor M**2**. The linkage for angle controlling of movable swash plate **67** does not have to be disposed on the outer (rear) surface of motor cover **202** in rear of hydraulic motor M**2** or in rear of the portion between hydraulic motors M**2** and M**3**, thereby ensuring a space in rear of the rear surface of front transaxle **2** for attaching pipe coupling block **70** and drain pipe coupling **71**. Due to pipe coupling block **70** disposed at this position, pipes connected to front transaxle **2** from rear transaxle **1** (or from pump unit **50** and front transaxle **101**) are streamlined so as to increase fluid circulation efficiency, and to reduce interference thereof with other parts or members.

A drive train from each motor shaft **61** to corresponding front wheel **9** will be described. As shown in FIG. **12**, motor shaft **61** of each of hydraulic motors M**2** and M**3** freely rotatably passes through thrust bearing **62** and swash plate support **65** or **66** so as to be connected to coaxial axle **8** supported in axle casing **203**. Facing ends of motor shaft **61** and axle **8** are spline-fitted into a bush **85** disposed in a proximal end portion of axle casing **203** from opposite openings of bush **85**, whereby coaxial motor shaft **61** and axle **8** are integrally rotatably connected to each other. Alternatively, single motor shaft **61** may be extended into axle casing **203** so as to serve as axle **8**.

As best shown in FIG. **13**, a bevel gear shaft **86** is journalled by a distal end portion of axle casing **203**. A distal end of axle **8** and a proximal end of bevel gear shaft **86** are spline-fitted into bush **85** disposed in the distal end portion of axle casing **203** from opposite openings of bush **85**, wherein coaxial axle **8** and bevel gear shaft **86** are integrally rotatably connected to each other. The distal end portion of axle casing **203** projects into kingpin casing **204**, so that a distal end of bevel gear shaft **86**, formed thereon with a bevel gear **86***a*, projects from axle casing **203** into an upper portion of kingpin casing **204**. A kingpin center shaft **87** is rotatably passed through the downwardly extended portion of kingpin casing **204**. A bevel gear **87***a* is fixed on a top of kingpin center shaft **87** in the upper portion of kingpin casing **204**, so as to mesh with bevel gear **86***a*.

A top opening of kingpin casing **204** facing the inner space of kingpin casing **204**, in which meshing bevel gears **86***a* and **87***a* are disposed, is wide so as to be adapted for economically forming kingpin casing **204** by die casting. Further, the wide opening facilitates easy and accurate forming of bearing grooves in the inner wall surface of kingpin casing **204**. The opening is closed by a grommet after the bevel gears and others are completely disposed in kingpin casing **204**.

The downwardly extended portion of kingpin casing **204** is inserted into steerable casing **205**. Steerable casing **205** relatively rotatably supports the downwardly extended portion of kingpin casing **204** therein with bearings. In other words, steerable casing **205** is laterally rotatable around kingpin casing **204**. Kingpin center shaft **87** is extended downward from a bottom end of kingpin casing **204**, and fixedly provided on a bottom end thereof with a bevel gear **87***b* in steerable casing **205** below kingpin casing **204**. Bevel gear **87***b* is journalled by a bottom portion of steerable casing **205**.

A bearing cover support portion **205***a* is formed on a lateral distal end of steerable casing **205** so as to journal a proximal end of a center axis shaft **9***a* of front wheel **9** in a center hole thereof. A diametrically large bevel gear **89** is fixed on center axis shaft **9***a* and meshes with bevel gear **87***b*. A bearing cover **206** is fastened to bearing cover support portion **205***a* so as to cover bevel gear **89**. Center axis shaft **9***a* is extended distally outward from bevel gear **89** so as to be pivoted onto bearing cover **206** via bearings, and further extended distally outward from bearing cover **206** so as to be connected at a distal end thereof to front wheel **9**.

In this way, front wheels **8** can be steered by rotating steerable casing **205** around kingpin casing **204** while receiving the output force of respective hydraulic motors M**2** and M**3** through respective motor shafts **61**, axles **8** and kingpin center shafts **87**.

As mentioned above, the entire casing of front transaxle **2** is formed by joining motor casing **201** (with motor cover **202**), left and right axle casings **203**, kingpin casings **204**, steerable casings **205** and bearing covers **206** to one another. A bearing for journaling a shaft is disposed at a junction between any adjoining casings of rear transaxle **2**. The bearing is provided with no oil seal. In this regard, lube (also used as operation fluid for the HST) filled in motor casing **201**, axle casings **203**, kingpin casings **204**, steerable casings **205** and bearing covers **206** can freely pass among these casings and covers. The costs for oil seals are saved. Oiling ports to fill entire front transaxle **2** with fluid (lube) can be reduced, and even only a single oiling port can be provided. Further, the total amount of fluid and the total surface area of hydraulic devices are increased so as to suppress heating of the hydraulic devices, thereby improving the hydraulic devices in endurance and mechanical efficiency.

The linkage from steering wheel **12** to steerable casing **205** will be described with reference to FIGS. **2** and **21**. A steering link bracket **207** is fixed on one of steerable casings **205** so as to cover the top surface of this steerable casing **205**. Preferably, steerable casing **205** having no acceleration rod **82** connected thereto is provided with steering link bracket **207**, so as

to prevent steering link bracket **207** from interfering with acceleration rod **82** and the like. A drag rod **90** is extended in parallel to an outer side surface of vehicle frame **3**, and pivotally connected at a front end thereof to steering link bracket **207**. A gearbox **12***b* is provided on a bottom end of a stem **12***a* (see FIG. **2**) of steering wheel **12**, and an arm **12***c* is fore-and-aft rotatably attached onto an output end of gearbox **12***b*. Drag rod **90** is pivotally connected at a rear end thereof to a free tip of arm **12***c*. Drag rod **90** may be replaced with a hydraulic power steering cylinder. Preferably, drag rod **90** or the hydraulic power steering cylinder is disposed substantially in parallel to vehicle frame **3**.

As best shown in FIGS. **10** and **11**, steering casing **205** on variable displacement hydraulic motor M**3** side and steering casing **205** on fixed displacement hydraulic motor M**2** are connected to each other via tie rod **84** so as to be laterally rotatable substantially integrally with each other. An end of tie rod **84** toward steering casing **205** on variable displacement hydraulic motor M**3** side is pivoted onto pivot pin **83**. Preferably, pivot pin **83** is stepped so that upper and lower portions of pivot pin **83**, onto which accelerator rod **82** and tie rod **84** are pivotally connected respectively, have different diameters. In this way, ends of accelerator rod **82** and tie rod **84** are pivoted on common pivot pin **82**, so as to save the parts count, and to prevent rods **82** and **84** from intercrossing each other hindering their own movement and movement of steerable casing **205**.

Referring to FIGS. **1**, **16**, **20** and others, a structure for supporting front transaxle **2** onto vehicle frame **3** will be described. Upright stays **201***a* are disposed at optimal positions (e.g., four stays **201***a* are disposed at the front, rear, right and left) on a top surface of motor casing **201**, and a center pin boss member **200** is mounted over all stays **201***a*. Center pin boss member **200** includes a horizontal plate portion **200***a*, which is integrally formed at the lateral center portion thereof with a fore-and-aft axial boss portion **200***b*. Four corners of plate portion **200***a* are screwed onto respective stays **201***a*. Center pin **5** is freely rotatably passed through a boss hole of boss portion **200***b*.

Some different designed center pin brackets **200** are prepared, and one corresponding to relative pivot positions of front transaxle **2** in a vehicle is selected to be fastened to stays **201***a* of motor casing **201**. Therefore, front transaxle **2** can be standardized for various designed vehicles.

Center pin **5** is journalled at front and rear ends thereof by front axle bracket **4** fixed on the front end of vehicle frame **3**. Front axle bracket **4** comprises a pair of left and right vertical side plates **4***a*, a vertical rear plate **4***b* connecting side plates **4***a* to each other, a front plate **4***c*, and a horizontal plate **4***d* connected between rear and front plates **4***b* and **4***c*.

Each of left and right side plates **4***a* has bolt holes **4***h* bored in a rear end portion thereof. Bolts are passed through bolt holes **4***h* of left and right side plates **4***a* so as to fasten left and right side plates **4***a* onto front end portions of respective left and right side plate portions of vehicle frame **3**, thereby fixing front axle bracket **4** onto the front end portion of vehicle frame **3**. Center pin **5** passed through center pin bracket **5** is journalled at the rear end portion by rear plate **4***b*, and at the front end portion by front plate **4***c*. Therefore, front transaxle **2** is swingably supported. Flexibility of hydraulic fluid hoses **23***a* and **26***a* permits the swing of front transaxle **2**.

In this state, horizontal plate **4***d* covers the top of motor casing **201** disposed in front of the front end of vehicle frame **3**. A pair of left and right stoppers **4***e* are hung down from the bottom surface of horizontal plate **4***d*. The position where one of stoppers **4***e* abuts against the top of plate portion **200***a* of center pin bracket **200** fixed on front transaxle **2** is defined as the limit swing position of front transaxle **2** centered on center pin **5**. Stoppers **4***e* also serve as ribs for reinforcing horizontal plate **4***d*.

Further, horizontal plate **4***d* is at a lower degree than the top of the front end of vehicle frame **3**. An engine muffler **10***d* is mounted on horizontal plate **4***d*, so as to be covered at a rear portion thereof with rear plate **4***b*, and at left and right end portions thereof with left and right side plates **4***a*. In this way, a suitable space for efficient radiation of engine muffler **10***d* is ensured in front axle bracket **4**. Further, horizontal plate **4***d* protects front transaxle **2** from the heat radiated from engine muffler **10***d*.

As shown in FIG. **20**, front ends of left and right side plates **4***a* are extended upwardly forward so as to serve as bonnet brackets **4***f* for supporting a pivot shaft for opening and closing bonnet **11**. The pivot shaft is passed through holes **4***g* formed in bonnet brackets **4***f*. A rear end of bonnet **11** can be rotated upward centered on the pivot shaft so as to open engine **10** mounted on vehicle frame **3**. Front axle bracket **4** can be fastened by bolts, or joined by welding, to a front end of a vehicle frame for a two-wheel drive vehicle, thereby platforming the vehicle frame for both two-wheel drive vehicles and four-wheel drive vehicles.

A part of each side plate **4***a* adjacent to corresponding bonnet bracket **4***f* is cut off and bent laterally inward of the vehicle so as to form a spring stay **4***j*, onto which an end of a spring for biasing bonnet **11** to its initial closed position is connected.

As shown in FIGS. **1**, **4** and **7**, mower lifting cradles **91** are extended downward from front ends of respective side plates **4***a* so as to guide the vertical movement of mower **20**. Link rods **91***a* are extended rearward from respective cradles **91** and connected to mower **20**. Plurality of bolt holes are bored in each of cradles **91**. On the other hand, as shown in FIG. **20**, a bolt hole **4***k* is bored in each side plate **4** below spring stay **4***j*. Each cradle **91** is disposed so as to selectively coincide one of the bolt holes thereof to bolt hole **4***k*, and fastened to each side plate **4***a* by a bolt through the selected bolt hole thereof and bolt hole **4***k*. In this way, the vertical position of mower **20** relative to front axle bracket **4** can be adjusted by selecting one of the bolt holes in each cradle **91**.

Front axle bracket **4** may be replaced with a simple vertical plate covering the front end of vehicle frame **3**, if the vehicle is a two-wheel drive vehicle having no front transaxle **2** incorporating the pair of hydraulic motors.

Referring to FIGS. **21** to **23**, two type rear-wheel steering systems will be described. These steering systems are applicable to the respective four-wheel drive lawn tractors according to the first embodiment shown in FIGS. **1** and **2**, the second embodiment shown in FIGS. **4** and **5**, and the third embodiment shown in FIGS. **7** and **8**. The rear-wheel steering system shown in FIGS. **21** and **22** is applied to the lawn tractor as shown in FIGS. **4** and **5**, having separate pump unit **50** and rear transaxle **101**. However, as shown in FIGS. **1** and **2**, rear transaxle **1** can be applied to a lawn tractor having rear transaxle **1** incorporating hydraulic pump P, such as the lawn tractor shown in FIGS. **1** and **2**.

Referring to the rear-wheel steering system of FIGS. **21** and **22**, a connection portion **3***b* is connected between left and right side plates **3***a* of vehicle frame **3**. Connection portion **3***b* is provided at the lateral center portion thereof with a bearing portion **3***c*. A vertical pivot shaft **221** is journalled by bearing portion **3***c*. A rear axle support frame **222** has a laterally central boss **222***a*, into which pivot shaft **221** extended downward from bearing portion **3***c* is inserted and fixed. A horizontal arm **222***b* is extended from boss **222***a* so as to be interlockingly connected to steering wheel **12**. Rear axle sup-

port frame **222** has laterally opposite first and second end portions **222***c* and **222***d*. First end portion (in this embodiment, the left end portion) **222***c* of rear wheel support frame **222** is extended downward, and fastened at the bottom end portion thereof to one of left and right end portions (in this embodiment, the left end portion) of the casing of rear transaxle **101**. Second end portion (in this embodiment, the right end portion) **222***d* of rear wheel support frame **222** is extended downward, and provided at the bottom thereof with a bearing **222***e* for longer axle **6** (in this embodiment, right axle **6**) extended outward from rear transaxle **101**. A space for duct **92** extended from mower **20** is ensured below axle **6** between bearing **222***e* and the other right or left end portion (in this embodiment, the right end portion) of rear transaxle **101**.

Rear transaxle **101** has longer and shorter axles **6**. Shorter axle **6** is extended laterally outward from the end portion of the casing of rear transaxle **101** fastened to the bottom of first end portion **222***c* of rear wheel support frame **222**, and fixed at the distal end thereof to one rear wheel **7**. Longer axle **6** is further extended laterally outward from bearing **222***e*, and fixed at the distal end thereof to the other rear wheel **7**.

Therefore, by rotating steering wheel **12**, rear wheel support frame **222** rotates integrally with rear transaxle **101**, left and right axles **6** and rear wheels **7** relative to vehicle frame **3** centered on pivot shaft **221**, thereby steering rear wheels **7**.

A structure of rear wheel support frame **222**, and a structure of the casing of rear transaxle **101** with axles **6** to be supported by rear wheel support frame **222** may be different from those shown in FIGS. **21** and **22**. The only important thing for this embodiment is to make the casing of rear transaxle **101** with axles **6** horizontally rotatable relative to vehicle frame **3** according to operation of steering wheel **12** while ensuring the driving of axles **6**.

Referring to the rear wheel steering system of FIG. **23**, rear wheel support frames **223** are fixed onto respective left and right side plates **3***a* of vehicle frame **3**. Each rear wheel support frame **223** has a portion extended downward from the bottom end of corresponding side plate **3***a*. The downwardly extended portion of rear wheel support frame **223** may be fastened to an end portion of the casing of rear transaxle **101** while avoiding interference thereof with corresponding axle **6** (axle **6** may be freely rotatably passed through the downwardly extended portion of rear wheel support frame **223**), as the downwardly extended portion of left rear wheel support frame **223** in FIG. **23** is so. Otherwise, the downwardly extended portion of rear wheel support frame **223** may be provided with a bearing portion **223***a* for journaling corresponding axle **6**, as the downwardly extended portion of right rear wheel support frame **223** in FIG. **23** is so provided. Both left and right rear wheel support frames **223** may be fastened to the casing of rear transaxle **101**. Alternatively, both left and right rear wheel support frames **223** may be provided with respective bearing portions **223***a* for respective axles **6**. The important distinction of this steering system of FIG. **23** from the above steering system of FIGS. **21** and **22** is that the casing of rear transaxle **101** is fixed to vehicle frame **3** regardless of steering of rear wheels **7**.

An upper kingpin support portion **223***b* and a lower kingpin support portion **223***c* are extended laterally outward from each rear wheel support frame **223**. The distal end of each axle **6** extended outward from the casing of rear transaxle **101** is disposed between upper and lower kingpin support portions **223***b* and **223***c*. The distal end of axle **6** is connected to center axis shaft **7***a* of rear wheel **7** via a universal joint **6***a*, so that rear wheel **7** with center axis shaft **7***a* can be substantially horizontal relative to axle **6**.

Center axis shaft **7***a* is journalled in a bearing block **224**. An upper arm **224***a* is extended from an upper portion of bearing block **224** so as to be pivotally connected to upper kingpin support portion **223***b* via a kingpin **225**. A lower arm **224***b* is extended from a lower portion of bearing block **224** so as to be pivotally connected to lower kingpin support portion **223***c* via a kingpin **226**. Upper and lower kingpins **225** and **226** are disposed coaxially, and the pivot of universal joint **6***a* is coaxially disposed between upper and lower kingpins **225** and **226**.

A tie rod (not shown) is interposed between tie rod stays **224***c* extended from respective upper portions of bearing blocks **224**, and connected to steering wheel **12**. By rotating steering wheel **12**, left and right bearing blocks **224** are substantially horizontally rotated around respective kingpins **225** and **226** so as to steer left and right rear wheels **7**.

The hydrostatic transaxle and the hydraulically driven vehicle of the present invention are applicable to various vehicles such as working vehicles including disclosed lawn tractors. The illustrated vehicles have Ackerman-type steering systems. However, the peripheral speed setting of front and rear wheels, the structure of the hydraulic pump unit separated from the front and rear transaxles, and the like are applicable to vehicles having different steering systems, such as an articulated vehicle.

It is further understood by those skilled in the art that the foregoing description is a preferred embodiment of the disclosed apparatus and that various changes and modifications may be made in the invention without departing from the spirit and scope thereof.

What is claimed is:

1. A hydraulically driven vehicle, comprising:

a first transaxle disposed at one of front and rear portions of the vehicle, wherein the first transaxle incorporates a first hydraulic motor for driving a first axle;

a second transaxle disposed at the other of the rear and front portions of the vehicle, wherein the second transaxle incorporates a second hydraulic motor for driving a second axle;

a hydraulic pump for supplying fluid to the first and second hydraulic motors;

a mower;

a duct for transferring grass mowed by the mower, wherein the duct has an upper surface sloped in the fore-and-aft direction of the vehicle, and wherein the first transaxle is disposed above the duct so that a bottom surface of the first transaxle is sloped along the upper surface of the duct; and

a vertical power train interposed between the first axle and an axial center shaft of a wheel driven by the first axle, wherein the power train is disposed on a lateral outside of the duct.

2. The hydraulically driven vehicle according to claim **1**, further comprising:

a vehicle frame; and

an engine for driving the hydraulic pump, wherein both the engine and the hydraulic pump are vibro-isolatingly mounted on the vehicle frame.

3. The hydraulically driven vehicle according to claim **1**, wherein the hydraulic pump is provided with a cooling fan.

4. The hydraulically driven vehicle according to claim **3**, wherein at least one of the first and second transaxles is disposed in an area blown by cooling wind generated from the cooling fan of the hydraulic pump.

5. The hydraulically driven vehicle according to claim **3**, further comprising:

a pipe for circulating fluid supplied to the first and second hydraulic motors, wherein the pipe is partly disposed in an area blown by cooling wind generated from the cooling fan of the hydraulic pump.

6. The hydraulically driven vehicle according to claim **3**, further comprising:

a reservoir tank disposed adjacent to the hydraulic pump; and

a pipe connecting the reservoir tank to at least one of the hydraulic pump and the first and second transaxles, wherein the pipe is disposed in an area blown by cooling wind generated from the cooling fan of the hydraulic pump.

7. The hydraulically driven vehicle according to claim **3**, wherein the hydraulic pump is disposed between the first and second transaxles.

8. The hydraulically driven vehicle according to claim **3**, wherein the first transaxle is disposed between the hydraulic pump and the second transaxle.

9. The hydraulically driven vehicle according to claim **1**, wherein the vertical power train is extended so that the first axle is offset from the axial center shaft of the wheel in the fore-and-aft direction of the vehicle.

10. The hydraulically driven vehicle according to claim **1**, wherein the first hydraulic motor is vertically aligned above the duct.

11. A hydraulically driven vehicle, comprising:

a first transaxle disposed at one of front and rear portions of the vehicle, wherein the first transaxle incorporates a first hydraulic motor for driving a first axle;

a second transaxle disposed at the other of the rear and front portions of the vehicle, wherein the second transaxle incorporates a pair of second hydraulic motors for driving respective second axles, and wherein each of the second hydraulic motors has a fixed displacement;

a first drive wheel disposed at one of the front and rear portions of the vehicle and driven by the first axle;

a hydraulic pump for supplying fluid to the first and second hydraulic motors;

a mower;

a duct for transferring grass mowed by the mower, wherein the first transaxle is disposed above the duct;

a vertical power train interposed between the first axle and an axial center shaft of the first drive wheel driven by the first axle, wherein the power train is disposed on a lateral outside of the duct;

a pair of second steerable drive wheels disposed at the other of the rear and front portions of the vehicle, and drivingly connected to the respective second axles, wherein a peripheral speed of the first drive wheel is set to be equal to peripheral speeds of the second drive wheels, or to be slightly larger than peripheral speeds of the second drive wheels, during straight traveling of the vehicle; and

a hydraulic circuit fluidly connecting the first hydraulic motor and the pair of second hydraulic motors in series to the hydraulic pump, and fluidly connecting the second hydraulic motors to the hydraulic pump in parallel to each other, wherein the hydraulic circuit includes a supply portion from which fluid is supplied to the pair of second hydraulic motors, and includes a check valve disposed in the supply portion so as to introduce fluid into the hydraulic circuit from outside of the hydraulic circuit.

12. A hydraulically driven vehicle, comprising:

a first transaxle disposed at one of front and rear portions of the vehicle, wherein the first transaxle incorporates a first hydraulic motor for driving a first axle;

a second transaxle disposed at the other of the rear and front portions of the vehicle, wherein the second transaxle incorporates a second hydraulic motor for driving a second axle, and incorporates a third hydraulic motor for driving another second axle, wherein the second hydraulic motor has a fixed displacement, and the third hydraulic motor has a variable displacement;

a first drive wheel disposed at one of the front and rear portions of the vehicle and driven by the first axle;

a hydraulic pump for supplying fluid to the first and second hydraulic motors;

a mower;

a duct for transferring grass mowed by the mower, wherein the first transaxle is disposed above the duct;

a vertical power train interposed between the first axle and an axial center shaft of the first drive wheel driven by the first axle, wherein the power train is disposed on a lateral outside of the duct; and

a pair of second steerable drive wheels disposed at the other of the rear and front portions of the vehicle, and drivingly connected to the respective second axles, wherein the variable displacement of the third hydraulic motor is changed according to turning angles of the second steerable drive wheels when the second steerable drive wheels are steered.

* * * * *