UNITED STATES PATENT AND TRADEMARK OFFICE

BEFORE THE PATENT TRIAL AND APPEAL BOARD

KUBOTA NORTH AMERICA CORPORATION,
Petitioner,

v.

VERMEER MANUFACTURING COMPANY,
Patent Owner.

IPR2025-00381
U.S. Patent No. 11,465,891

Filed: August 10, 2026

PATENT OWNER'S NOTICE OF APPEAL TO THE UNITED STATES COURT OF APPEALS FOR THE FEDERAL CIRCUIT

via P-TACTS
Patent Trial and Appeal Board

via Email
Director of the United States Patent and Trademark Office
efileSO@uspto.gov

via CM/ECF
United States Court of Appeals for the Federal Circuit

Pursuant to 28 U.S.C. § 1295(a)(4)(A), 35 U.S.C. §§ 141(c), 142, and 319, and 37 C.F.R. §§ 90.2(a), 90.3, 5 U.S.C. §§ 701–706, and Federal Circuit Rule 15(a)(1), Patent Owner Vermeer Manufacturing Company ("Patent Owner") provides notice that it appeals to the United States Court of Appeals for the Federal Circuit from the Final Written Decision of the Patent Trial and Appeal Board ("Board") entered June 8, 2026 (Paper 49) (public version at Paper 50), and from all underlying and related orders, decisions, rulings, and opinions regarding U.S. Patent No. 11,465,891 B2 ("the '891 Patent") in *inter partes* review proceeding IPR2025-00381.

In accordance with 37 C.F.R. § 90.2(a)(3)(ii), the expected issues on appeal include, but are not limited to: the Board's error(s) in determining that Petitioner demonstrated that challenged claims 1–10 of the '891 Patent are unpatentable, and any finding or determination supporting or related to those determinations—including, but not limited to the Board's claim construction, factual findings regarding the prior art and motivation to combine the teachings of the prior art, and denial of Patent Owner's motion to exclude the foreign-language references for failure to comply with 37 C.F.R. § 42.63(b) and Federal Rules of Evidence 602 and 604—as well as all other issues decided adversely to Patent Owner in any orders, decisions, rulings, or opinions in *inter partes* review proceeding IPR2025-00381.

Pursuant to 35 U.S.C. § 142 and 37 C.F.R. § 90.2(a), this Notice is being filed with the Director of the United States Patent and Trademark Office and with the Patent Trial and Appeal Board. In addition, a copy of this Notice and the required docketing fees are being filed with the Clerk's Office for the United States Court of Appeals for the Federal Circuit via CM/ECF.

Date: August 10, 2026

Respectfully submitted,

/Richard L. Brophy/

Richard L. Brophy
Reg. No. 69,736
Armstrong Teasdale LLP
7700 Forsyth Boulevard
Suite 1800
Saint Louis, Missouri 63105
Telephone: 314.621.5070
Facsimile: 314.621.5065
rbrophy@atllp.com

Lead Counsel for Patent Owner

CERTIFICATE OF SERVICE

Under 37 C.F.R. § 42.6(e), the undersigned certifies that on August 10, 2026, a copy of the foregoing was served via electronic mail on the following attorneys of record:

David M. O'Dell
HAYNES AND BOONE, LLP
2801 N. Harwood Street, Suite 2300
Dallas, TX 75201
Phone: (972) 739-8635
Fax: (214) 200-0853
david.odell.ipr@haynesboone.com
USPTO Reg. No. 42,044

Greg Michelson
HAYNES AND BOONE, LLP
2801 N. Harwood Street, Suite 2300
Dallas, TX 75201
Phone: (949) 202-3022
Fax: (214) 200-0853
greg.michelson.ipr@haynesboone.com
USPTO Reg. No. 44,940

Kelly Gehrke Lyle
HAYNES AND BOONE, LLP
2801 N. Harwood Street, Suite 2300
Dallas, TX 75201
Phone: (512) 867-8528
Fax: (214) 200-0853
kelly.lyle.ipr@haynesboone.com
USPTO Reg. No. 62,332

John Russell Emerson
HAYNES AND BOONE, LLP
2801 N. Harwood Street, Suite 2300
Dallas, TX 75201
Phone: (214) 651-5328
Fax: (214) 200-0853
Russ.Emerson.IPR@haynesboone.com
USPTO Reg. No. 44,098

Hong Shi
HAYNES AND BOONE, LLP
2801 N. Harwood Street, Suite 2300
Dallas, TX 75201
Phone: (512) 867-8440
Fax: (214) 200-0853
hong.shi.ipr@haynesboone.com
USPTO Reg. No. 69,009

By: *___/Richard L. Brophy/___*
Lead Counsel for Patent Owner
Richard L. Brophy
Reg. No. 69,736

Trials@uspto.gov
571-272-7822

Paper 49
Date: June 8, 2026

UNITED STATES PATENT AND TRADEMARK OFFICE

BEFORE THE PATENT TRIAL AND APPEAL BOARD

KUBOTA NORTH AMERICA CORPORATION,
Petitioner,

v.

VERMEER MANUFACTURING COMPANY,
Patent Owner.

IPR2025-00381
Patent 11,465,891 B2

Before MEREDITH C. PETRAVICK, ANNETTE R. REIMERS, and ERIC C. JESCHKE, *Administrative Patent Judges*.

JESCHKE, *Administrative Patent Judge*.

JUDGMENT
Final Written Decision
Determining All Challenged Claims Unpatentable
Granting in Part Petitioner's Motion to Exclude
Denying Patent Owner's Motion to Exclude
35 U.S.C. § 318(a)

I. BACKGROUND

Petitioner, Kubota North America Corporation, challenges claims 1–10 of U.S. Patent No. 11,465,891 B2 (Ex. 1001, "the challenged patent"), which is assigned to Patent Owner, Vermeer Manufacturing Company. We have jurisdiction under 35 U.S.C. § 6, and we issue this Final Written Decision under 35 U.S.C. § 318(a) and 37 C.F.R. § 42.73.

For the reasons below, we conclude that Petitioner has proven, by a preponderance of the evidence, the unpatentability of claims 1–10. We grant in part Petitioner's Motion to Exclude and we deny Patent Owner's Motion to Exclude.

A. Procedural History

Petitioner filed a Petition seeking *inter partes* review of the challenged claims. Paper 1 ("Pet."). Patent Owner filed a Preliminary Response. Paper 6. Upon review of the arguments and supporting evidence, we instituted an *inter partes* review of all claims and grounds asserted in the Petition. Paper 11 ("Decision on Institution" or "Dec. Inst.").

After institution, Patent Owner filed a Patent Owner Response (Paper 15, "PO Resp.")[1], Petitioner filed a Reply in support of the Petition (Paper 23, "Pet. Reply"), and Patent Owner filed a Sur-reply to Petitioner's Reply (Paper 27, "PO Sur-reply").

Petitioner relies on the declaration testimony of Dr. Steven Alan Velinsky, Ph.D., P.E. filed with the Petition (Ex. 1003, "Velinsky Pet. Decl.") and on the Second Declaration of Dr. Velinsky, filed with the Reply (Ex. 1042, "Velinsky Reply Decl."). Patent Owner relies on the declaration

[1] Paper 16 is a public version of the Patent Owner's Response.

testimony of Dr. Mark Fleming, Ph.D., P.E., filed with the Patent Owner's Response. Ex. 2013 ("Fleming Decl.").[2]

An oral argument in this proceeding was held on March 19, 2026, and a copy of the transcript was entered into the record. Paper 47 ("Tr.").[3]

B. Related Proceedings

The parties identify one proceeding in the U.S. District Court for the Northern District of Texas ("the Texas District Court") involving the challenged patent: *Vermeer Manufacturing Co. v. Kubota North America Corp.*, No. 4:24-cv-00799-P (N.D. Tex.), filed August 20, 2024 (the "Texas Litigation"). Pet. 76; Paper 3 (Patent Owner Mandatory Notices) at 2. The Texas District Court stayed the Texas Litigation on March 19, 2025, pending resolution of proceedings before the Board. *See* Ex. 1038 (Order granting Motion to Stay).

Petitioner identifies one terminated proceeding in the U.S. District Court for the Southern District of Iowa (the "Iowa District Court") involving the challenged patent: *Vermeer Manufacturing Co. v. The Toro Co.*, No. 4-17-cv-00076 (S.D. Iowa) (filed Feb. 28, 2017; terminated May 17, 2021) (the "Iowa Litigation").[4] Pet. 76.

---

[2] Exhibit 2013 is also a public version of Dr. Fleming's Declaration.

[3] Paper 48 is a public version of the transcript.

[4] Although some filings in the Iowa Litigation include "Vermeer Corporation" in the caption, "Vermeer Manufacturing Company" (i.e., Patent Owner here) was formally substituted into the caption and pleadings in the Iowa Litigation. *See* ECF No. 129 (Dec. 21, 2018) (Text Order).

The parties identify other proceedings at the Board involving patents allegedly related to the challenged patent. This table identifies the related patents and their respective case numbers:

Case No.	U.S. Patent No.
IPR2025-00167	9,321,386 B1
IPR2025-00168	9,321,386 B1
IPR2025-00169	9,321,386 B1
IPR2025-00170	9,975,750 B2
IPR2025-00171	10,202,266 B2
PGR2025-00016	12,098,063 B2

Pet. 77; Paper 3 at 2.

C. The Challenged Patent

The challenged patent "relates to compact tool carriers having a loader mounted to a low-profile mainframe." Ex. 1001, 1:22–23. According to the challenged patent, "[c]ompact tool carriers are tool-mounted machines that are capable of working in tight spaces for utility or do-it-yourself home projects." *Id.* at 1:27–29. Figure 1 is reproduced below:

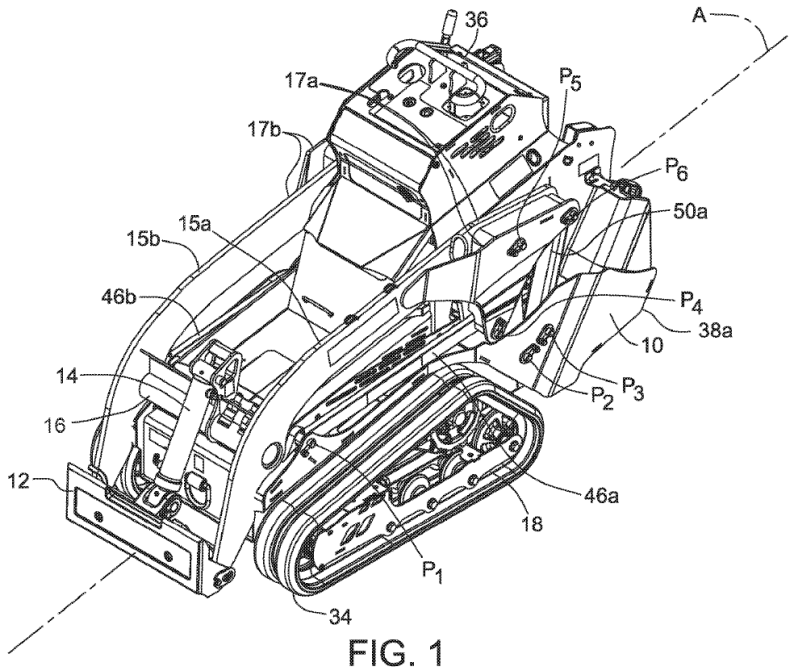

FIG. 1

Figure 1 is a perspective view of a compact tool carrier with the loader in the down position. Ex. 1001, 2:36–37.

Figures 2 and 3 are below:

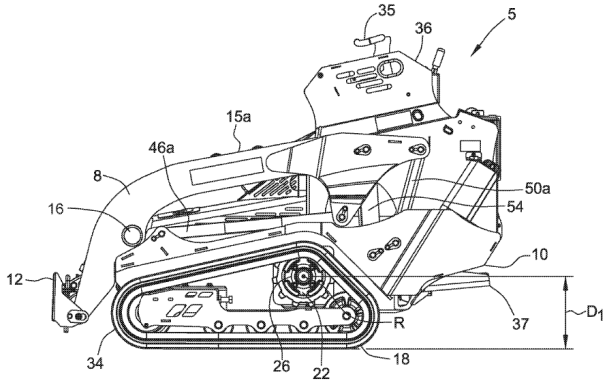

FIG. 2

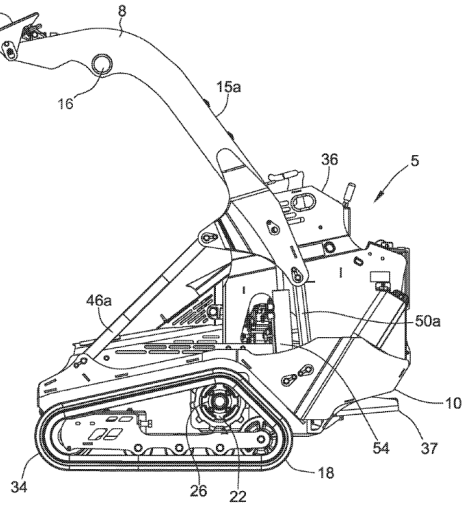

FIG. 3

Figure 2 is a side view of a compact tool carrier with the loader in the lowered position, and Figure 3 is a side view of a compact tool carrier with the loader in the raised position. Ex. 1001, 2:38–41. The compact tool carrier 5 shown above includes "a loader 8 supported by a mainframe 10" and "an attachment plate 12 for interchangeably attaching any one of a number of tools (not shown)." *Id.* at 2:55–58.[5] In addition, compact tool carrier 5 includes (1) loader arms 15a and 15b, (2) a drive mechanism 18 attached to mainframe 10, (3) a control station 36 with controls for moving compact tool carrier 5 and raising and lowering loader 8, (4) an operator platform 37 for standing operation, and (5) linkages 46a, 46b, 50a, and 50b

[5] In this Decision, we omit emphasis on reference numerals in quotations from the challenged patent and prior art references.

attached to mainframe 10. *Id.* at 2:62–64, 3:31–32, 3:42–45, 3:56–57, 4:34–41, 4:55–58. Actuator 54 "is powered to raise the loader 8 and, in some embodiments, is also powered to lower the loader 8 (as opposed to a one-way actuator lowered by gravity alone)." *Id.* at 4:51–54.

Figure 4 is reproduced below:

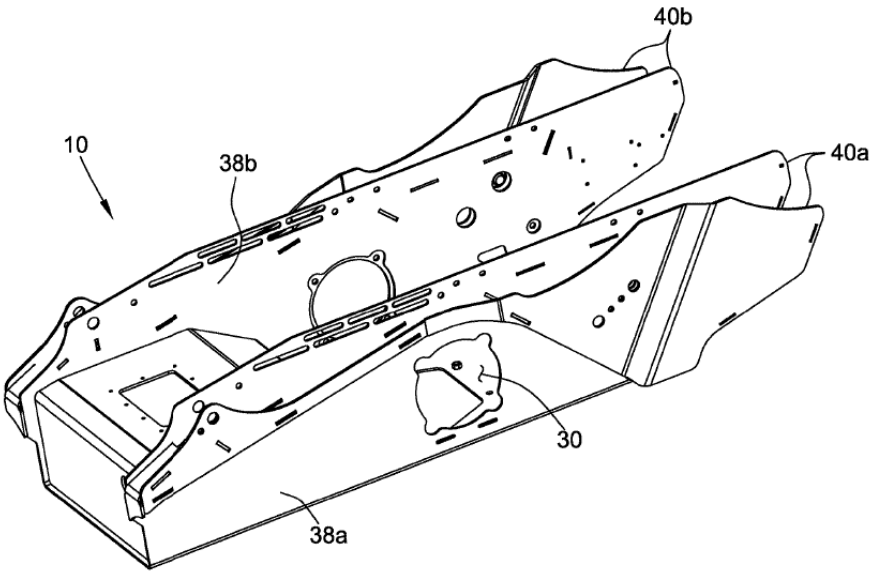

FIG. 4

Figure 4 is a perspective view of a mainframe of a compact tool carrier. Ex. 1001, 2:42–43. The challenged patent states: "As used herein, the term 'mainframe' generally refers to a single weldment to which the loader 8 is attached, optionally through one or more pivotal linkages." *Id.* at 4:15–18.

D. The Challenged Claims

Petitioner challenges claims 1–10, of which only claim 1 is independent. Independent claim 1 is reproduced below, reformatted from the version provided in the challenged patent and with bracketed designations added to identify each clause:

1. [**1.0**] A loader apparatus configured for standing operator control and comprising:

[**1.1**] a loader adapted to carry a tool, the loader being moveable between a down position and a vertically raised position, the loader comprising:

[**1.2**] a first loader arm; a second loader arm; and at least one cross-member that extends from the first loader arm to the second loader arm;

[**1.3**] a loader support having a first side and a second side, the loader being free from direct attachment to the loader support;

[**1.4**] a first actuator for tilting of a tool connected to the loader;

[**1.5**] a first linkage connected to the first side of the loader support and connected to the loader, the first linkage being pivotal relative to the first side of the loader support;

[**1.6**] a second linkage connected to the first side of the loader support and connected to the loader, the second linkage being pivotal relative to the first side of the loader support;

[**1.7**] a second actuator for raising the loader, the second actuator being connected to the loader support and connected to the loader, the second actuator being directly attached to the loader, the second actuator being pivotal relative to at least the first side of the loader support;

[**1.8**] a control station having operator controls for propelling the loader apparatus forward and for raising and lowering the loader; and

[**1.9**] an operator platform for standing operation of the operator controls of the control station;

[**1.10**] a drive mechanism for propelling the loader apparatus over a supporting surface, at least a portion of the operator platform being disposed rearward of the drive

mechanism relative to a longitudinal axis of the loader apparatus; and

[**1.11**] wherein the loader apparatus does not include an operator's seat.

Ex. 1001, 6:47–7:18.[6]

E. Instituted Grounds of Unpatentability

We instituted *inter partes* review of the challenged claims based on the following grounds of unpatentability asserted by Petitioner:

Claim(s) Challenged	35 U.S.C. §[7]	Reference(s)/Basis
1–8, 10	102(a)(1)	KR996[8]
1–8, 10	103	KR996
9	103	KR996, Bares[9]

[6] We adopt and apply below Petitioner's designations for the elements of the challenged claims. *See* Pet. 23–46 (showing designations for the language in challenged claim 1).

[7] The Leahy-Smith America Invents Act ("AIA") included revisions to 35 U.S.C. §§ 102, 103 that became effective on March 16, 2013. Pub. L. No. 112-29, §§ 3(b)–3(c), 3(n)(1), 125 Stat. 284, 285–87, 293 (2011). Because there is no dispute that the challenged claims have effective filing dates after March 16, 2013, we apply the AIA versions of the statutes. We would reach the same outcome, however, under the pre-AIA versions.

[8] Korean Intellectual Property Office Patent KR 10-1041996, published June 16, 2011 (Ex. 1005 (Korean version and certified translation), "KR996").

[9] United States Patent US 6,832,659 B1, issued December 21, 2004 (Ex. 1010, "Bares").

Claim(s) Challenged	35 U.S.C. §[7]	Reference(s)/Basis
8	103	KR996, SAE[10,11]

II. DISCUSSION

A. The Level of Ordinary Skill in the Art

The level of ordinary skill in the art is "a prism or lens" through which we view the prior art and the claimed invention. *Okajima v. Bourdeau*, 261 F.3d 1350, 1355 (Fed. Cir. 2001). The person of ordinary skill in the art is a hypothetical person presumed to have known the relevant prior art. *In re GPAC Inc.*, 57 F.3d 1573, 1579 (Fed. Cir. 1995). In determining the level of ordinary skill in the art, we may consider certain factors, including the "type of problems encountered in the art; prior art solutions to those problems; rapidity with which innovations are made; sophistication of the technology; and educational level of active workers in the field." *Id.* (internal quotation marks and citation omitted).

Petitioner contends, citing declaration testimony, that a person having ordinary skill in the art at the time of the alleged invention "would have had at least a Bachelor of Science degree in Mechanical or Agricultural Engineering and two years of experience in the design of vehicles, or have had equivalent knowledge and experience." Pet. 17. Petitioner adds that

---

[10] SAE International, *J2752 – Surface Vehicle Recommended Practice, Personal Protection – Compact Tool Carriers* (June 2010) (Ex. 1015, "SAE").

[11] In the Decision on Institution, we inadvertently identified this ground as obviousness based on KR996, Bares, and SAE. *See* Dec. Inst. 8.

"[l]ack of professional experience can be remedied by additional education, and vice versa." *Id.* (citing Velinsky Pet. Decl. ¶¶ 17–20).

Patent Owner responds that it "does not dispute" the definition of one of ordinary skill in the art proposed by Petitioner and "notes that it substantially tracks" Patent Owner's definition. PO Resp. 26; *see also id.* n.6 (defining one of ordinary skill in the art as having "at least a Bachelor of Science degree in Mechanical or Agricultural Engineering and two years of experience in the design of machines, or have had equivalent knowledge and experience").

As noted in the Decision on Institution, Petitioner's proposed definition appears consistent with the record, including the prior art. *See* Dec. Inst. 9–10 (citing *In re GPAC Inc.*, 57 F.3d at 1579). Patent Owner's proposal is the same, except Patent Owner uses the term "machines" instead of "vehicles." With that, we agree with Patent Owner that the differences in the two proposed levels of ordinary skill in the art are minor. Further, Patent Owner has not argued at trial that Petitioner's proposal for the level of ordinary skill leads to an improper understanding of how a skilled artisan would have understood either the challenged patent or the prior art. In the analysis below, we continue to apply the level of ordinary skill in the art adopted in the Decision on Institution, as proposed by Petitioner. The analysis would be the same under Patent Owner's proposed level.

B. Patent Owner's Arguments Regarding Dr. Velinsky's Testimony

We turn now to Patent Owner's arguments presenting several different reasons that Dr. Velinsky's testimony should be given little to no weight. *See* PO Resp. 30–36; PO Sur-reply 8–13. We address each in turn.

First, Patent Owner contends that Dr. Velinsky's "testimony should be disregarded" because he "lacks necessary experience." PO Resp. 30–31. According to Patent Owner, Dr. Velinsky "has no experience designing machines like the compact tool carriers at issue in this proceeding," "lacks any familiarity with how the components of these machines are typically configured or packaged within a machine," and "knows nothing about the kinds of attachments these machines accept." *Id.* at 31 (citing Ex. 2020 (Velinsky Depo. Tr.), 18:4–28:7); *see also* PO Sur-reply 10 (arguing that "***none*** of [Dr.] Velinsky's prior work relates to compact utility loaders"). Patent Owner also contends that Dr. Velinsky

> did nothing to investigate the performance characteristics that drive demand for these machines, has never operated a compact tool carrier, did not operate or even inspect any of the physical machines sold by the parties to this dispute, and did not ask to speak with a single engineer at Kubota about the challenges they face when designing these machines.

PO Resp. 31–32 (citing Ex. 2020, 12:6–13:1, 33:19–34:5, 35:8–36:1). Patent Owner adds that Dr. Velinsky allegedly "has no experience or capabilities with CAD or finite element analysis software—basic tools that would be known to [one of ordinary skill in the art] and used for designing machines in the industry during the critical timeframe at issue in this proceeding." *Id.* at 32 (citing Ex. 2020, 13:2–14:11). At the oral hearing, counsel clarified that, with this argument, Patent Owner takes the position that Dr. Velinsky does not meet the level of ordinary skill in the art. *See* Tr. 36:23–38:24.

We are not persuaded by this argument because none of the knowledge that Patent Owner highlights as lacking in Dr. Velinsky is listed

in the nearly identical proposals for the level of ordinary skill in the art. *See* § II.A. Patent Owner does not dispute that Dr. Velinsky has the required Bachelor of Science degree in Mechanical or Agricultural Engineering and two years of experience in the design of *vehicles*, as required. *See* Velinsky Pet. Decl. ¶¶ 7–16 (discussing qualifications and experience), *discussed at* Pet. Reply 8. After agreeing with Petitioner's level of ordinary skill in the art (PO Resp. 26), Patent Owner now seeks to exclude *all* of Dr. Velinsky's declaration testimony based on *additional* proposed requirements. *See* PO Resp. 30–32. We decline to do so. *See Sierra Wireless, ULC v. Sisvel S.p.A.*, 130 F.4th 1019, 1024 (Fed. Cir. 2025) ("To offer expert testimony from the perspective of a skilled artisan in a patent case—like for claim construction, validity, or infringement—a witness must at least have ordinary skill in the art." (quoting *Kyocera Senco Indus. Tools Inc. v. Int'l Trade Comm'n*, 22 F.4th 1369, 1376–77 (Fed. Cir. 2022)) (applying the requirement from *Kyocera* in an appeal from a PTAB decision)).

Second, Patent Owner argues that Dr. Velinsky improperly "relied on [Petitioner's] attorneys to create the CAD drawings that appear in his declaration," that Dr. Velinsky "admitted that he did not determine the locations for the various pivot points that he proffers for his hypothetical modified machine, instead leaving those critical decisions to [Petitioner's] attorney," and that Petitioner's attorneys "handled the work of designing the configuration (pivot points, actuator length, linkage lengths, etc.) that appears in [Dr.] Velinsky's declarations." PO Resp. 32 (citing Ex. 2020, 14:12–17:11). According to Patent Owner, Dr. Velinsky "failed to consider whether or where *any* of the components of the machine disclosed in KR996 would be located in the modified machine, or whether those components

would be compatible with the modifications he proposes" and thus failed to perform "any engineering analysis or assessment whatsoever." *Id.* at 33 (citing Ex. 2020, 130:14–132:6, 134:25–135:21). Patent Owner argues that, "[f]or this reason alone, his opinions are pure *ipse dixit* and should be disregarded." *Id.* We will not disregard the entirety of Dr. Velinsky's testimony based on these issues. Indeed, Patent Owner has failed to provide *any* legal basis for such a result based on these concerns. *See id.* at 32–33 (citing only Dr. Velinsky's deposition for this argument).

Third, Patent Owner argues that we should disregard all of Dr. Velinsky's declaration testimony because he "failed to consider any objective indicia of non-obviousness—including the evidence that was an express part of the reexamination prosecution histories." PO Resp. 33 (citing Ex. 2020, 56:10–62:2). Again, we will not disregard the entirety of Dr. Velinsky's testimony based on this issue at least because Patent Owner has failed to provide *any* legal basis for such a result. *See id.* (citing only Dr. Velinsky's deposition for this argument).

Fourth, Patent Owner argues that we should disregard Dr. Velinsky's declaration testimony because he "freely admitted to conducting his analysis using impermissible hindsight." PO Resp. 33–34 (citing Ex. 2020, 52:21–56:9). We disagree. As argued by Petitioner, Dr. Velinsky never "admitted" to using "hindsight" in his analysis. *See* Pet. Reply 32. Rather, the cited deposition testimony walks through the process of Dr. Velinsky's analysis, which Patent Owner *now* characterizes in its argument as "hindsight." For example, in the Response, Patent Owner highlights and quotes a portion of testimony in which Dr. Velinsky acknowledges to have "list[ed] a limitation and then you [found] where it is in the prior art." PO Resp. 33–34 (quoting

Ex. 2020, 54:7–10). That is not an admission of hindsight, but merely an acknowledgement of the process that constitutes an obviousness analysis. *See In re McLaughlin*, 443 F.2d 1392, 1395 (CCPA 1971) ("Any judgment on obviousness is in a sense necessarily a reconstruction based upon hindsight reasoning, but so long as it takes into account only knowledge which was within the level of ordinary skill at the time the claimed invention was made and does not include knowledge gleaned only from applicant's disclosure, such a reconstruction is proper."); *see also* Ex. 2020, 54:24–25 (Dr. Velinsky responding that "[w]e had to look to the claims to know what the technology was").

Fifth, Patent Owner contends that Dr. Velinsky's testimony regarding "loader support" should be given "no weight" because Dr. Velinsky "did not require the 'loader support' to be the primary supporting structure of the machine." PO Resp. 34 (citing Ex. 2020, 65:10–17). The record does not support this argument. In the deposition testimony highlighted by Patent Owner, counsel showed Dr. Velinsky his declaration from related IPR2025-00167, which included a statement in paragraph 74 about *Patent Owner's* proposed construction of the term "mainframe." Ex. 2020, 65:10–17. Counsel then asked if that was the construction Dr. Velinsky applied in his analysis, to which Dr. Velinsky did not reply directly but identified aspects with which he agreed, including that the purpose of the "mainframe" is to "support the loader as described." *Id.* at 65:18–25. Counsel then asked other questions (*id.* at 66:1–13) before returning to *again* ask whether Dr. Velinsky applied Patent Owner's construction in his analysis, to which he replied "Yes, I would say so." *Id.* at 66:14–17. Regardless, this testimony is not pertinent to *this* proceeding because the term "mainframe" is not recited

in any of the challenged claims. Moreover, Patent Owner has not provided a legal basis to ignore *the entirety* of Dr. Velinsky's testimony on this basis.

As part of this argument, Patent Owner also highlights that Dr. Velinsky identified portions of the lower frame of bogies 30 and 50 in KR996 as part of the "mainframe," allegedly indicating his "improper and overly expansive view of [the] scope of the claims." PO Resp. 34–36 (citing Ex. 2020, 118:20–120:25) (reproducing Ex. 2021 (Velinsky Depo. Exhibit 2) at 15, 22 (showing pen identifying structures of the "mainframe" in KR996, Figs. 1 and 14)). And again, this testimony is not pertinent to *this* proceeding because the term "mainframe" is not recited in any of the challenged claims.

Lastly, Patent Owner argues that Dr. Velinsky's opinions should be given "little weight" because Dr. Velinsky was unaware that Patent Owner had an expert and did not review Dr. Fleming's declaration. *See* PO Sur-reply 11–13 (citing *Juniper Networks, Inc. v. Correct Transmission LLC*, No. 2023-1046, 2024 WL 3517862 at *5 (Fed. Cir. July 24, 2024)).

The *Juniper Networks* decision relied upon by Patent Owner does not support the request to give the entirety of Dr. Velinsky's testimony "little weight." That Federal Circuit proceeding involved an appeal of two *inter partes* review final decisions determining claims in two patents not unpatentable because petitioner had failed to show a reasonable expectation of success in the proposed combination. *Juniper Networks*, 2024 WL 3517862 at *1, *3, *5. The cited discussion addressed the reasonable expectation of success issue as to one patent, with the Federal Circuit concluding that the Board's determination was supported by substantial evidence. *Id.* at *5. The Federal Circuit expressly found petitioner's

declarant's testimony to be "conclusory and not credible" before summarizing patent owner's declarant's "contradictory testimony" and the Board's findings in support of that testimony. *Id.* The Federal Circuit identified three issues that constituted substantial evidence supporting the Board's conclusion on reasonable expectation of success: (1) patent owner's declarant's contradictory testimony, (2) petitioner's declarant's failure to address certain unidentified issues discussed by patent owner's declarant, and (3) the Board crediting patent owner's declarant over petitioner's declarant. *Id.*

Put simply, the *Juniper Networks* decision did not involve similar facts to here, in which a petitioner's declarant was apparently unaware of a patent owner's declarant and did not review the declaration filed with the patent owner's response. And the *Juniper Networks* decision does not stand for the proposition that if a petitioner's declarant files a reply declaration that does not address all points raised in a declaration filed with a patent owner's response, the *entirety* of the testimony by petitioner's declarant should be given little weight or that Patent Owner *must* prevail on any given issue not addressed in the reply declaration. *See, e.g.*, PO Sur-reply 11 (arguing that Petitioner's "odd stratagem also renders [Dr.] Fleming's expert testimony unrebutted" and that Petitioner's "bald attorney argument in its Reply provides no support for the Board to find in [Petitioner's] favor on these issues"). Instead, we address each factual and legal issue individually below, taking into account the entire record, which includes the Petition and Dr. Velinsky's two declarations.

C. Patent Owner's Motion to Exclude

1. Background

Patent Owner filed a Motion to Exclude (Paper 34, "PO Mot.") seeking to exclude Petitioner's Exhibits 1005, 1006, and 1014, which are English language translations of exhibits in either Korean or Japanese. Patent Owner contends Exhibits 1005, 1006, and 1014 should be excluded because the corresponding certificates of translation do not comply with 37 C.F.R. § 42.63(b) and fail to comply with Federal Rules of Evidence ("FRE") 602 and 604. *See* PO Mot. 2–6; *see also* Paper 44 (Patent Owner's Reply in Support of its Motion to Exclude, "PO Reply"). Petitioner opposes Patent Owner's Motion to Exclude. *See* Paper 37 ("Pet. Opp.").

After considering all of Patent Owner's and Petitioner's arguments, for the reasons discussed below, we deny Patent Owner's request to exclude Exhibits 1005, 1006, and 1014.

2. Analysis

"The moving party has the burden of proof to establish that it is entitled to the requested relief." 37 C.F.R. § 42.20.

Exhibit 1005 is an English language translation of Korean Patent No. 10-1041996. Exhibit 1006 is an English language translation of Japanese document JP2004-17705A. Exhibit 1014 is an English language translation of Korean Patent No. 10-1023528. A Certification of Translation signed by Takashi Maeshiro of HC Language Solutions, Inc., accompanies each of Exhibits 1005, 1006, and 1014. Ex. 1005 at 28; Ex. 1006 at 16; Ex. 1014 at 16. Each Certification of Translation is worded substantially the same except for the references to the document at issue and the source

language being either Korean or Japanese. Exhibit 1005's Certification of Translation, for example, states:

> I, Takashi Maeshiro, on behalf of HC Language Solutions, Inc., do solemnly and sincerely declare, *to the best of my knowledge and belief*, that the attached text represents a translation of Korean Patent No. 10-1041996, that the translation was performed by HC Language Solutions, Inc., and that the translation represents a true, correct, and faithful translation from Korean to English in a form that reflects the intention and meaning of the original text.
>
> I hereby declare that all statements made herein of my own knowledge are true and *that all statements made on information and belief are believed to be true*; and further that these statements were made with the knowledge that willful false statements and the like so made are punishable by fine or imprisonment, or both, under Section 1001 of Title 18 of the United States Code.

Ex. 1005 at 28 (emphasis added).

Patent Owner argues that the Certifications of Translation do not comply with 37 C.F.R. §§ 1.68 and 42.63(b) because they "must be based on the affiant's personal knowledge and signed under penalty of perjury." PO Mot. 3; *see also id.* at 1–6; PO Reply 1–2. Patent Owner alleges that the Certifications of Translation are deficient because Takashi Maeshiro does not state that he "personally performed the translation, that he speaks the source language, or that he otherwise has the skills necessary to confirm each translation's accuracy." PO Mot. 4.

Rule 42.63 states: "When a party relies on a document or is required to produce a document in a language other than English, a translation of the document into English and *an affidavit attesting to the accuracy of the translation must be filed with the document*." 37 C.F.R. § 42.63 (emphasis

added). Under our rules, the term "affidavit" is defined to include a declaration in lieu of an oath under rule 1.68. 37 C.F.R. § 42.2. Rule 1.68 allows for a declaration in lieu of an oath and states: "The declarant must set forth in the body of the declaration that all statements made of the declarant's own knowledge are true and that all statements made on information and belief are believed to be true."

Thus, our rules do not require attestation by a translator, or by a person who speaks the source language and has personally confirmed the accuracy of the translation. Further, our rules do not preclude attestation, for example, by an employee of a translation company based on information or belief. The phrase "[t]o the best of my knowledge and belief" in the Certifications of Translation indicates that Takashi Maeshiro may be attesting to the accuracy based on information and belief and not based solely on personal knowledge of the translation. *See, e.g.*, Ex. 1005.

Patent Owner submitted Takashi Maeshiro's LinkedIn page (Ex. 2046[12]) as evidence that Takashi Maeshiro speaks Japanese but not

[12] In its Opposition, Petitioner includes a section titled "Patent Owner's EX2046 Should be Excluded" in which Petitioner "moves to exclude Patent Owner's EX2046." Opp. 9–10. Petitioner contends that, during a February 25, 2026 conference call, the Board authorized a motion to exclude Exhibit 2046 as part of its Opposition. *Id.* We disagree. During the conference call, we explicitly denied Petitioner's request to file a motion to exclude Exhibit 2046, but we indicated that Petitioner could discuss in its Opposition to this Motion its concerns about the sufficiency of Exhibit 2046. We will not issue a decision on Petitioner's untimely motion to exclude Exhibit 2046. Opp. 9–11. In any event, we note that any motion by Petitioner to exclude Exhibit 2046 would be moot as we have denied Patent Owner's Motion here, finding Exhibit 2046 to be unpersuasive.

Korean. PO Mot. 4–5. Patent Owner argues that Takashi Maeshiro's lack of ability to speak Korean undermines the veracity of the attestation in the Certifications of Translation for Exhibits 1005 and 1014, the Korean language translations, and, by extension, the attestation in the Certification of Translation for Exhibit 1006, the Japanese language translation. *Id.*

The LinkedIn page is silent as to whether or not Takashi Maeshiro speaks Korean. Ex. 2046. That silence does not lead to the conclusion that Takashi Maeshiro's Certifications of Translation fail to satisfy the requirement of 37 C.F.R. § 42.63(b). Nor does that silence sufficiently call into question Takashi Maeshiro's attestation that, based on information and belief, "the translation represents a true, correct, and faithful translation from Korean to English." *See, e.g.*, Ex. 1005 at 5.

Patent Owner cites to *Google LLC v. 138 East LCD Advancements Ltd.*, IPR2024-00958, Paper 43 at 53 (PTAB Dec. 18, 2025) (non-precedential) ("*Google*") and argues that the Board has excluded other English language translations due to a deficient certificate of translation attestation. PO Mot. 5–6; PO Reply 4–5.

Patent Owner's argument is unpersuasive because the circumstances here are not sufficiently similar to those in *Google*. *See* Pet. Opp. 6–7. In *Google,* a translation certification was signed by a project manager of a translation company, who attested to the following: "To the best of my knowledge, the aforementioned documents are a true, full and accurate translation of the specified documents." IPR2024-00958, Ex. 2003. The Board determined that the project manager's attestation was based on personal knowledge of the translation, that other evidence indicated that the project manager did not speak the source language, and that, when

requested, the project manager was not made available for deposition as to the translation. *Google*, Paper 43 at 53–58. On the facts there, the Board excluded the translations, determining that, because the affiant was not made available for deposition, the opposing party was "unable to question the affiant and cannot directly test the affiant's veracity or challenge the affiant's basis for making the statements in the affidavit," which "contravenes 37 C.F.R. § 42.63(b) (2015) and the Board's Trial Practice Guide." *Google*, Paper 43 at 57–58. Thus, in *Google*, the Board did not exclude the English language translation based on the alleged deficiencies in the certificate of translation alone. Instead, the Board excluded the English language translation because the veracity of the project manager's attestation was in question and because the project manager was not made available for a deposition when requested.

In contrast, here, Patent Owner makes no allegation that the translations, themselves, are inaccurate, nor does the Patent Owner provide an alternate translation to show that Exhibits 1005, 1006, and 1014 translations are inaccurate. *See* Pet. Opp. 2–3. Patent Owner did not seek to depose Takashi Maeshiro about the Certifications of Translation. *Id.*

We are not persuaded by Patent Owner that the Certifications of Translation are deficient and do not comply with 37 C.F.R. §§ 1.68 and 42.63(b).

Based on its argument that a certificate of translation must be made by the translator, Patent Owner also argues that Exhibits 1005, 1006, and 1014 should be excluded under FRE 602 and 604. *See generally* PO Mot. 1–6.

Rule 42.62 states: "Except as otherwise provided in this subpart, the Federal Rules of Evidence shall apply to a proceeding." 37 C.F.R. § 42.62.

Federal Rule of Evidence 604 states: "An interpreter must be qualified and must give an oath or affirmation to make a true translation." And FRE 602 states: "A witness may testify to a matter only if evidence is introduced sufficient to support a finding that the witness has personal knowledge of the matter. Evidence to prove personal knowledge may consist of the witness's own testimony."

Patent Owner does not persuade us that FRE 602 and FRE 604 apply to the circumstances here, where Rule 42.63(b) does not require an attestation by the translator (i.e., an interpreter) and does not preclude an attestation by an employee of a translation company, such as Takashi Maeshiro.

For the reasons above, we deny Patent Owner's Motion to Exclude as to Exhibits 1005, 1006, and 1014.

D. Petitioner's Motion to Exclude

1. Background

Petitioner filed a Motion to Exclude seeking to exclude certain aspects of Patent Owner's exhibits. *See* Paper 33 ("Pet. Mot."); *see also* Paper 41 (Petitioner's Reply in Support of its Motion to Exclude, "Pet. Reply"). Patent Owner opposes Petitioner's Motion. *See* Paper 38 ("PO Opp."). Below, we address the issues raised as to Petitioner's Motion to Exclude.

2. Analysis

a. Embedded Documents and Deposition Testimony

Exhibits 2002, 2014, and 2015 are portions of the prosecution histories of Reexamination Control Nos. 90/014,269; 90/013,915; and 90/014,109, respectively. Patent Owner's arguments concerning objective indicia of nonobviousness in this proceeding cite to attorney argument

concerning objective indicia of nonobviousness in these prosecution histories. *See* PO Resp. 51–68. For example, Patent Owner cites to an Amendment and Response to Office Action, found on pages 161–259 of Exhibit 2002. *See, e.g.*, PO Resp. 57 (citing Ex. 2002 at 174–176). As another example, Patent Owner cites to a slide presentation concerning objective indicia. *See, e.g.*, PO Resp. 55 (citing Ex. 2014 at 185). Embedded in the prosecution attorney argument are citations, quotes, reproduced charts, and other references to documents and deposition testimony, including from a district court litigation between Patent Owner and third-party, The Toro Company (the Iowa Litigation referenced above (*see* § I.B)); for example, the prosecution attorney argument quotes testimony from a deposition of Neil B. Borenstein. *See, e.g.*, Ex. 2002 at 175–176.

Although portions of the embedded documents and deposition testimony are also found elsewhere in the reexamination prosecution history, much of Patent Owner's objective indicia arguments here do not independently cite to the documents and deposition testimony, nor does Patent Owner independently provide in this proceeding the entirety of the documents and deposition testimony.

Petitioner moves to exclude the embedded documents and deposition testimony from Exhibits 2002, 2014, and, 2015 under FRE 802 because Patent Owner relies upon them in the Patent Owner's Response for improper hearsay purposes. Pet. Mot. 1–15. Petitioner argues that the embedded documents and deposition testimony are statements made outside of this proceeding, relied upon for the truth of the matter asserted. *Id.* at 2.

Patent Owner argues that the evidence does not constitute inadmissible hearsay in that Patent Owner does not rely upon the evidence for the truth of the matter asserted. PO Opp. 1–5. According to Patent Owner, it relies upon the evidence to show that the evidence was already considered by the Office. *Id.*

Patent Owner relies upon the embedded documents and deposition testimony for two purposes: first, to show that the Office considered the evidence during reexamination (*see* PO Resp. 51–53) and second, as evidence to support the objective indicia arguments here (*see id.* at 53–62). When Patent Owner relies upon the embedded documents and deposition testimony for the *first* purpose, we are persuaded by Patent Owner that the embedded documents are not hearsay because they are not offered for the truth of the matter asserted. *See* FRE 801(c). Thus, we do not exclude the embedded documents and deposition testimony when relied upon for the first purpose.

When the embedded documents and deposition testimony are relied upon for the *second* purpose, however, the evidence is inadmissible hearsay under FRE 802. For example, Patent Owner's arguments concerning long-felt but unresolved need cite to Exhibit 2002, pages 174 to 176 to show that customer's desired greater lift capacity. *See* PO Resp. 57. Embedded in the attorney argument at Exhibit 2002, pages 174 to 176 are quotations from a deposition of Neil Borenstein concerning Toro's work to satisfy its customer's alleged demand for lift capacity. The quotations are statements that were made outside of trial here and are offered as evidence to prove the truth of the matter asserted—i.e., that customer's desired greater lift capacity. Quotations from a deposition of Mr. Kuemper are also embedded

in the attorney argument. *See, e.g.*, Ex. 2002 at 171–172. Mr. Kuemper's testimony is likewise hearsay. We note that Patent Owner did not produce Mr. Borenstein or Mr. Kuemper for cross-examination, here, when requested by Petitioner. Pet. Mot. 10–13.

As another example, Patent Owner's arguments concerning commercial success cite to Exhibit 2014, page 185 and Exhibit 2015, pages 128–129 and 218 to show that "Toro's 2015 Annual Statement similarly boasted a significant increase in compact utility loader sales following the launch of its TX1000 machine." PO Resp. 55.

The overlapping material from those pages is reproduced below:

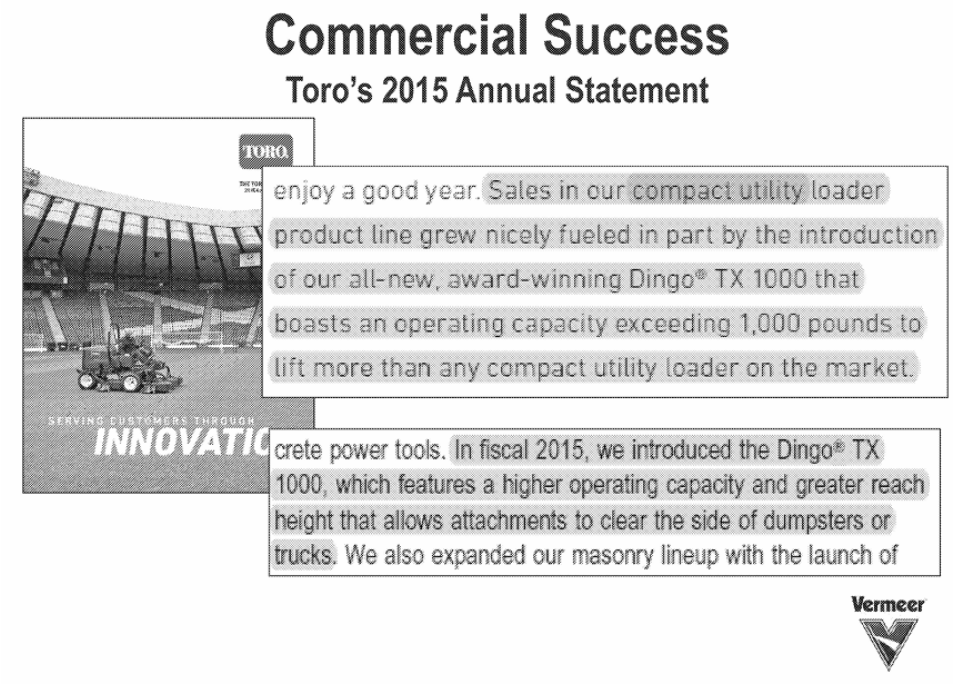

As can be seen from the above, the overlapping material is not Toro's 2015 Annual Statement, but rather, a slide with statements that may be from Toro's 2015 Annual Statement. As such, Exhibit 2014, page 185 and Exhibit 2015, pages 128–129 and 218 at least include inadmissible hearsay.

For these reasons, we are persuaded by Petitioner to exclude, as inadmissible hearsay under FRE 802, all of the embedded documents and deposition testimony from Exhibits 2002, 2014, and 2015, when relied upon by Patent Owner in its substantive papers for the purpose of showing evidence of objective indicia.

Petitioner also moves to exclude the embedded documents and deposition testimony under FRE 403 because their probative value is substantially outweighed by the danger of unfair prejudice. *See, e.g.*, Pet. Mot. 3–4. Because we have already excluded the embedded documents and deposition testimony under FRE 802, Petitioner's additional request is moot.

b. Fleming Declaration (Exhibit 2013) ¶¶ 151–161

Petitioner moves to exclude paragraphs 151 to 161 of the Declaration of Dr. Fleming because those paragraphs simply parrot the hearsay statements concerning Toro's Development Story. Pet. Mot. 13–14; *see also* Pet. Reply 5. Petitioner seeks to "exclude portions of Dr. Fleming's declaration because it contains a multitude of statements that are hearsay, made by persons other than Dr. Fleming, which are then parroted in [his testimony] as if to provide substantive evidence." Pet. Mot. 13–14. According to Petitioner, FRE 703 "'does not authorize admitting inadmissible evidence' where the expert has 'added nothing to the inadmissible evidence other than transmitting it to the fact-finder.'" Pet. Reply 5 (quoting *Wi-LAN Inc. v. Sharp Elecs. Corp.*, 992 F.3d 1366, 1374 (Fed. Cir. 2021)).

Patent Owner responds that we should not exclude the identified portions of the Fleming Declaration because FRE 703 "expressly allows experts to rely on information in reaching their opinions, regardless of

whether the information is admissible." PO Opp. 13; *see id.* at 12–15 (entire argument).

Neither party, however, informs us *where* Patent Owner relies upon or cites to these paragraphs in support of its objective indicia argument or elsewhere in the substantive papers. Our review of the Patent Owner's Response and the Sur-reply did not reveal *any* citations to paragraphs 151–161 of the Declaration of Dr. Fleming. We deny the request to exclude paragraphs 151–161 of Dr. Fleming's testimony. As we ordinarily do not consider evidence not relied upon or cited in the substantive papers, Petitioner request to exclude paragraphs 151–161 of the Declaration of Dr. Fleming is moot.

Even if we were to consider the paragraphs at issue, we would give them little weight. These paragraphs largely relate to The Toro Company's development of a product. *See, e.g.*, Fleming Decl. ¶¶ 151–161. As Dr. Fleming is not associated with The Toro Company, his testimony as to events there would be of little persuasive value.

E. Claim Construction

1. The Applicable Standard

In *inter partes* reviews, the Board interprets claim language using the same claim construction standard that would be used in a civil action under 35 U.S.C. § 282(b), as described in *Phillips v. AWH Corp.*, 415 F.3d 1303 (Fed. Cir. 2005) (en banc). *See* 37 C.F.R. § 42.100(b). Under that standard, we generally give claim terms their ordinary and customary meaning, as would be understood by a person of ordinary skill in the art at the time of the invention, in light of the language of the claims, the specification, and the prosecution history. *See Phillips*, 415 F.3d at 1313–14. Although extrinsic

evidence, when available, may also be useful when construing claim terms under this standard, extrinsic evidence should be considered in the context of the intrinsic evidence. *See id.* at 1317–19.

2. "loader support" (claim 1)

In its initial filing, Petitioner stated that "no claim term requires express construction" (Pet. 17), but Petitioner noted that the Iowa District Court discussed constructions of certain claim terms (*id.* n.3). Patent Owner asserts that "loader support" in independent claim 1 should be construed the same as the term "mainframe" in some of the related proceedings (i.e., as a "primary supporting structure"). *See* PO Resp. 26–30; PO Sur-reply 13–18. Petitioner takes no position on the issue. Pet. Reply 9–10.

Based on the current record, we disagree with Patent Owner that we should construe "loader support" similarly to how we construed "mainframe" in the related proceedings. As noted by Petitioner (Pet. Reply 10 n.4), the term "loader support" is used nowhere in the written description of the challenged patent; instead, it is found only in the claims. Patent Owner contends that the challenged patent "uses the term 'loader support' interchangeably with 'mainframe,'" but does not explain how or cite to support for that position. PO Resp. 26; *see also* PO Sur-reply 13 (stating that the challenged patent "uses the term 'loader support' in the same manner that other patents in the same family use the term 'mainframe' or 'rigid frame'").

Moreover, that the written description and claims across the related proceedings overall may indicate that a "loader support" and a "mainframe" may have *some similar functionality* does not make the terms interchangeable from a claim construction perspective in the context of this

proceeding. *See Bd. of Regents of the Univ. of Texas Sys. v. BENQ Am. Corp.*, 533 F.3d 1362, 1371 (Fed. Cir. 2008) ("Different claim terms are presumed to have different meanings.") (citing *CAE Screenplates Inc. v. Heinrich Fiedler GmbH & Co.*, 224 F.3d 1308, 1317 (Fed. Cir. 2000) ("In the absence of any evidence to the contrary, we must presume that the use of these different terms in the claims connotes different meanings.")).

Thus, we are not persuaded by Patent Owner's view that intrinsic and extrinsic evidence *regarding a different term*—i.e., "mainframe"—supports a similar proposed construction for "loader support." *See, e.g.*, PO Resp. 27–30 (discussing intrinsic and extrinsic evidence relating to "mainframe" and then proposing a definition of "loader support"). Instead, we apply the plain and ordinary meaning of "loader support," which aligns with the view of the Iowa District Court. *See* Ex. 1020 at 5 (the Iowa District Court stating that "loader support" "will be given [its] plain and ordinary meaning"); 37 C.F.R. § 42.100(b) ("Any prior claim construction determination concerning a term of the claim in a civil action . . . that is timely made of record in the *inter partes* review proceeding will be considered.").

We need not construe explicitly any claim terms because doing so would not change the outcome of the analysis below. *See Realtime Data, LLC v. Iancu*, 912 F.3d 1368, 1375 (Fed. Cir. 2019) ("The Board is required to construe 'only those terms . . . that are in controversy, and only to the extent necessary to resolve the controversy.'" (quoting *Vivid Techs., Inc. v. Am. Sci. & Eng'g, Inc.*, 200 F.3d 795, 803 (Fed. Cir. 1999)).

F. Asserted Anticipation and Obviousness of Claims 1–8 and 10 Based on KR996

Petitioner asserts that claims 1–8 and 10 of the challenged patent are anticipated by and would have been obvious based on by KR996. Pet. 19, 20–60; Pet. Reply 16–18. Patent Owner provides arguments specifically addressing this asserted ground. PO Resp. 37–41; PO Sur-reply 20–22. We first summarize aspects of the relied-upon prior art.

1. Overview of KR996

KR996 "relates to construction equipment for green building deconstruction work," and, more particularly, to equipment "that can enter narrow buildings and carry out dismantling work inside the building, and can easily attach and detach various dismantling equipment to the vehicle according to the form of the deconstruction work." Ex. 1005 ¶ 1.

Figure 1 of KR996 is reproduced below:

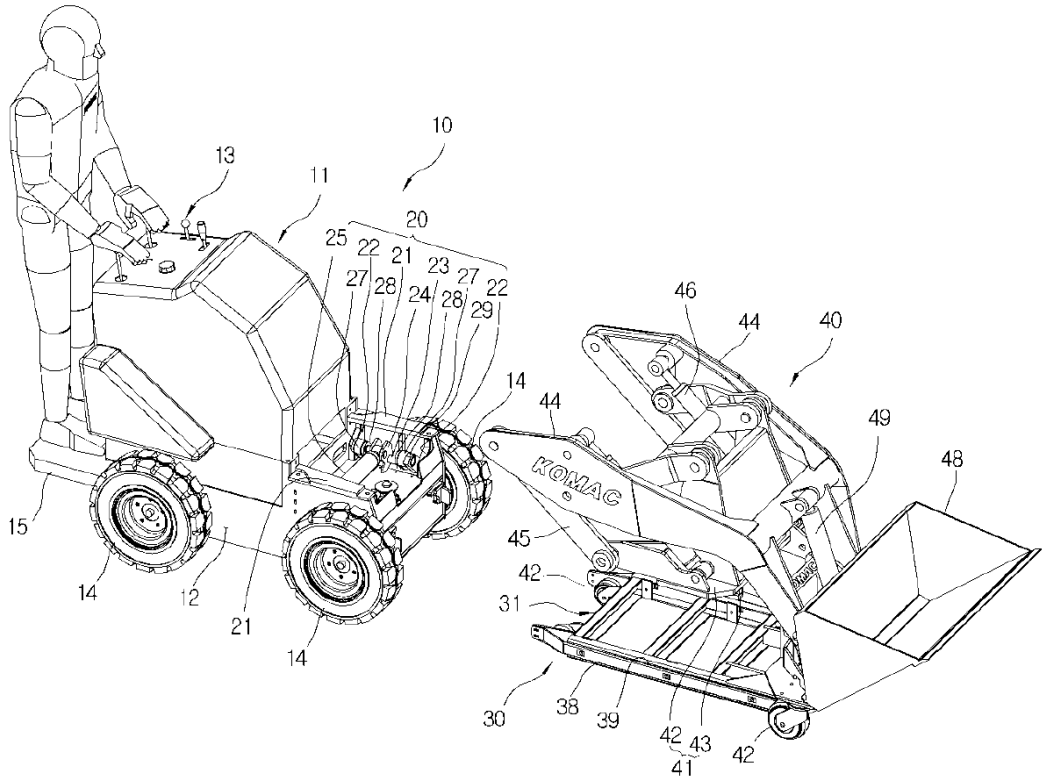

Figure 1 is a perspective view showing before loader unit 40 and bogie 30 are attached to vehicle 10. Ex. 1005 ¶¶ 40, 93. To attach bogie 30/loader unit 40 to vehicle 10, the operator shown on board at the rear uses control unit 13 to move vehicle 10 forward to engage detachable part 20 with fixture 41. *Id*. ¶¶ 42, 43, 54.

Figure 7 is reproduced below:

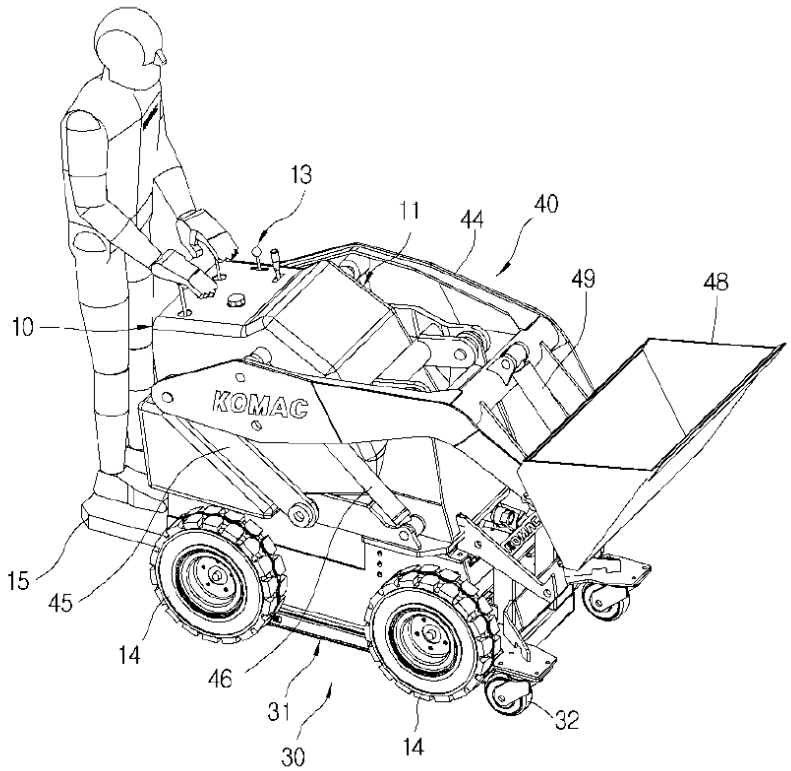

Figure 7 is a perspective view showing bogie 30 and loader unit 40 coupled to the detachable part of the vehicle. Ex. 1005 ¶¶ 40, 99. As shown in this Figure, vehicle 10 also includes (1) wheels 14 for moving vehicle 10, (2) linkage 45 to support boom 44, (3) actuator 46 to drive boom 44 upwards and downwards, and (4) bucket 48 to carry material. *Id.* ¶¶ 52, 54, 74.

2. Independent Claim 1

Petitioner contends that KR996 both anticipates and renders obvious independent claim 1. Pet. 23–46. To support its arguments, Petitioner identifies certain passages in the cited references and explains the significance of each passage with respect to the corresponding claim limitation. *Id.* Patent Owner argues that KR996 does not disclose a "loader support" and thus fails to disclose limitations requiring "linkage[s]" and an

"actuator" attached to the "loader support." *See* PO Resp. 37–40; PO Sur-reply 20. In addition, Patent Owner presents evidence of objective indicia of nonobviousness. *See* PO Resp. 51–68; PO Sur-reply 23–27. We address each issue in turn.

a. The Loader Support Limitations

Claim 1 recites, in relevant part, "[1.3] a loader support having a first side and a second side . . . ; [1.5] a first linkage connected to the first side of the loader support . . . ; [1.6] a second linkage connected to the first side of the loader support . . . ; [1.7] a second actuator for raising the loader, the second actuator being connected to the loader support." Ex. 1001, 6:56, 6:60–7:1 (collectively, the "loader support limitations").

As to the recitation of "a loader support having a first side and a second side," Petitioner provides the following annotated version of Figure 9 of KR996:

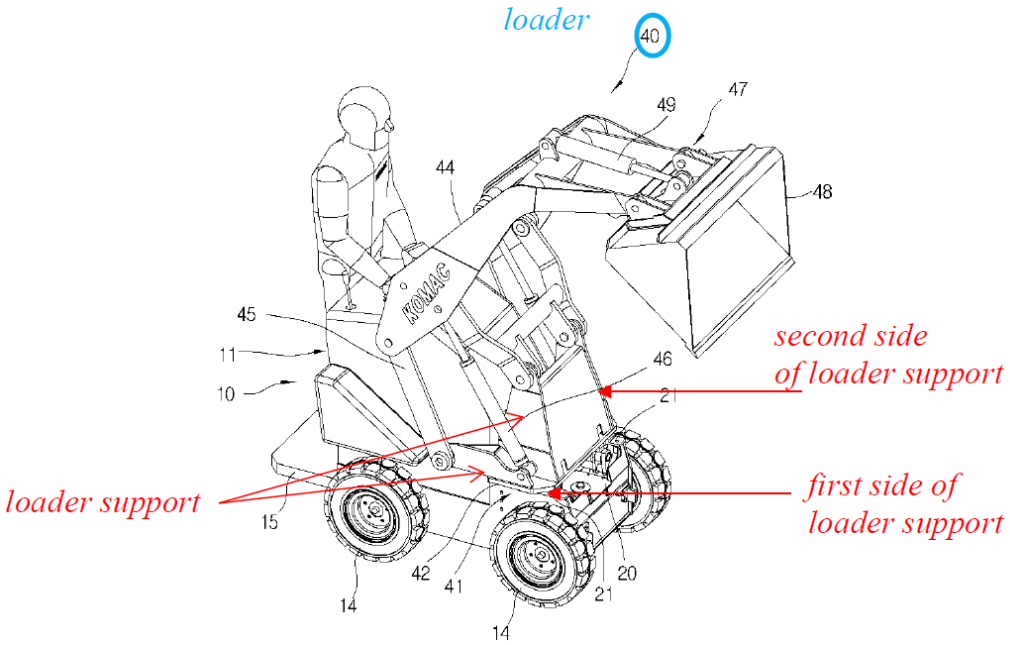

Pet. 30. In the annotated version of Figure 9 of KR996 above, Petitioner added (1) red text and arrows identifying a "loader support," a "first side of loader support," and a "second side of loader support" and (2) blue text identifying a "loader." *Id.* Petitioner adds that "the *loader support* includes the portions of the frame of the KR996 vehicle that when in operation, support the attached loader unit 40 having loader arms of the booms 44." Pet. 29. Petitioner also states that "KR996's *loader support* includes the bracket to which the link 45 and boom cylinder 46 attach, as well as the frame protrusion, connected to the bracket, to which the forward link attaches." *Id.* (citing Velinsky Pet. Decl. ¶ 72).

Moreover, in the alternative, Petitioner adds that, "[t]o the extent the Patent Owner argues . . . that the *loader support* includes additional components than those providing direct attachment, KR996's *loader support* also includes its other frame portions including main body 11 and side plates 12." Pet. 30–31 (citing Ex. 1005 ¶¶ 44, 49, Figs. 1, 7–9).

As to the recitation of "a first linkage connected to the first side of the loader support," Petitioner provides the following annotated version of Figure 9 of KR996:

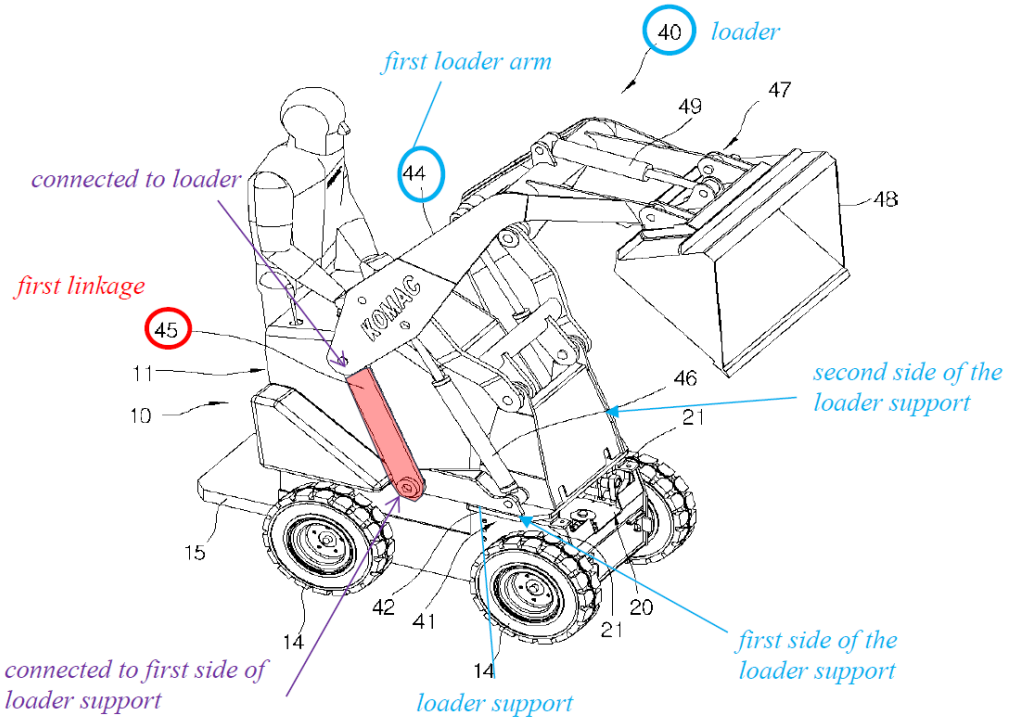

Pet. 35. In the annotated version of Figure 9 of KR996 above, Petitioner added (1) red text and a circle identifying a "first linkage," (2) purple text and lines identifying where the "first linkage" is "connected to loader" and "connected to first side of loader support," (3) blue text and lines identifying a "first loader arm" and a "loader support," (4) blue text and arrows identifying a "first side of loader support" and a "second side of loader support," and (5) blue text identifying a "loader." *Id.*

As to the recitation of "a second linkage connected to the first side of the loader support," Petitioner provides the following annotated version of Figure 9 of KR996:

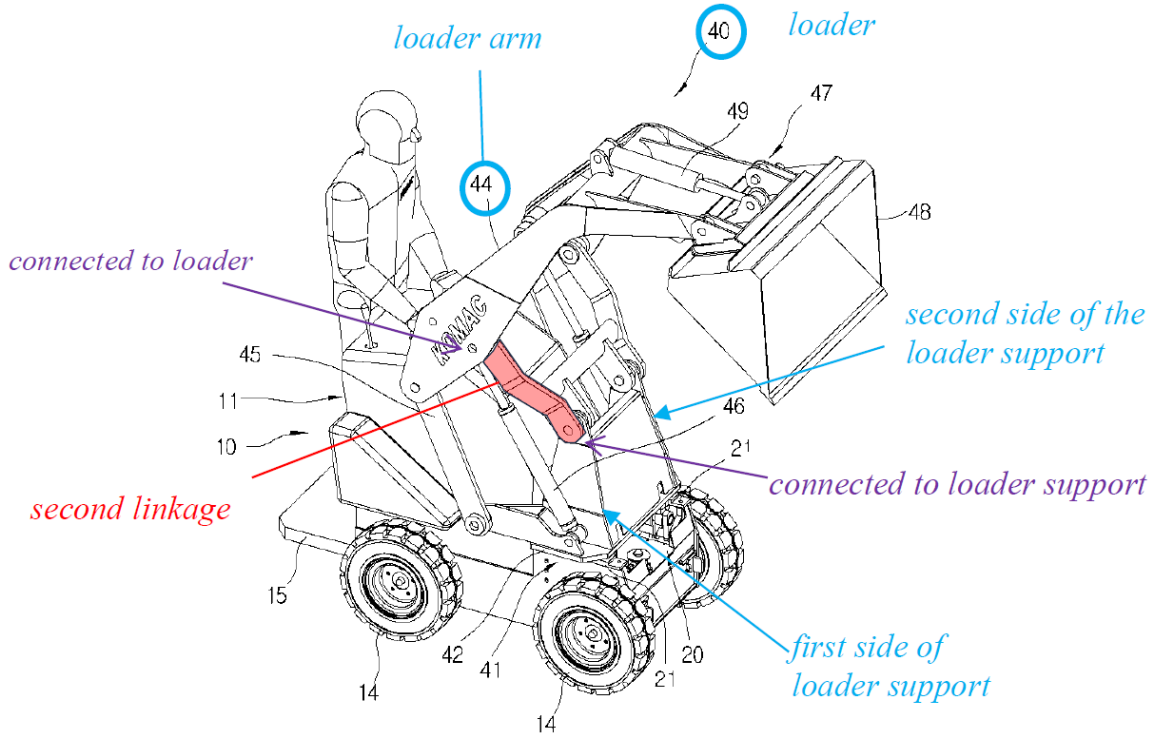

Pet. 37. In the annotated version of Figure 9 of KR996 above, Petitioner added (1) red text and a line identifying a "second linkage," (2) purple text and lines identifying where the "second linkage" is "connected to loader" and "connected to loader support," (3) blue text and a line identifying a "loader arm," (4) blue text and arrows identifying a "first side of loader support" and a "second side of loader support," and (5) blue text identifying a "loader." *Id.*

Finally, as to the recitation of "a second actuator for raising the loader, the second actuator being connected to the loader support," Petitioner provides the following annotated version of Figure 9 of KR996:

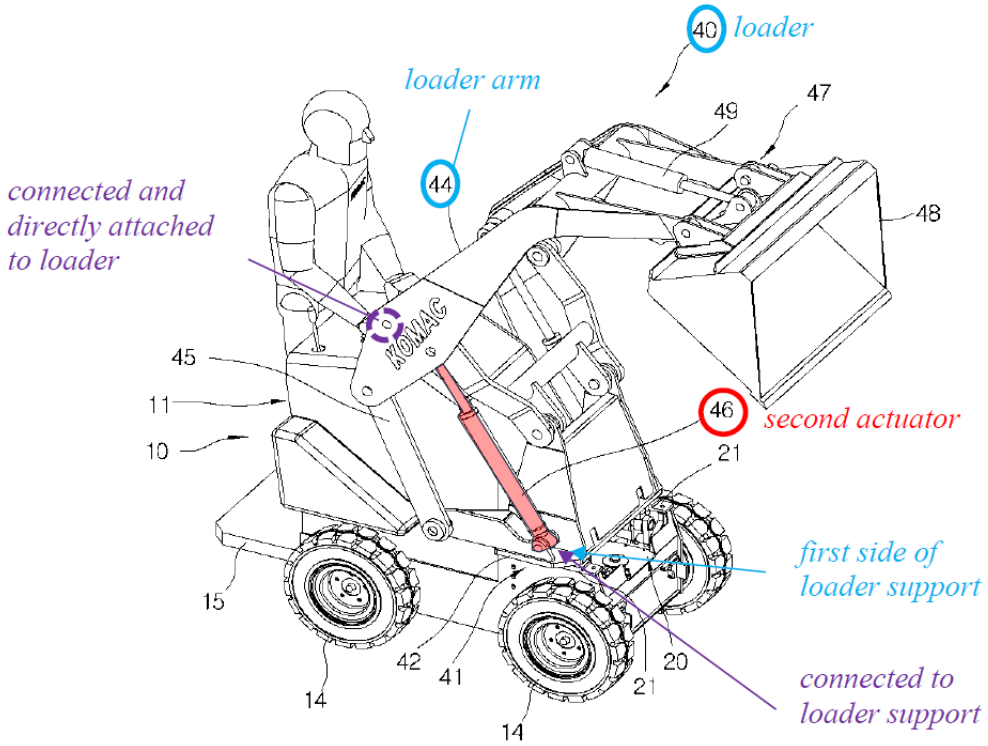

Pet. 39. In the annotated version of Figure 9 of KR996 above, Petitioner added (1) red text and a circle identifying a "second actuator," (2) purple text and lines identifying where the "second actuator" is "connected and directly attached to loader" and "connected to loader support," (3) blue text and a line identifying a "loader arm," (4) blue text and an arrow identifying a "first side of loader support," and (5) blue text identifying a "loader." *Id.*

Patent Owner argues that KR996 fails to disclose or suggest the loader support limitations in claim 1. *See* PO Resp. 37–40; PO Sur-reply 20. Specifically, Patent Owner contends that, to satisfy the requirements that two "linkage(s)" and an "actuator" are "connected to" the "loader support," Petitioner and Dr. Velinsky "are forced to assert that the removable fixture (41) of the loader arm *attachment* [in KR996] constitutes a part of the 'loader support' of the machine." PO Resp. 38 (citing Pet. 29–30, 31;

Velinsky Pet. Decl. ¶¶ 72, 73, 75, 86, 87, 90, 93, 94, 102, 127–129). In support, Patent Owner provides this annotated version of Figure 1 of KR996:

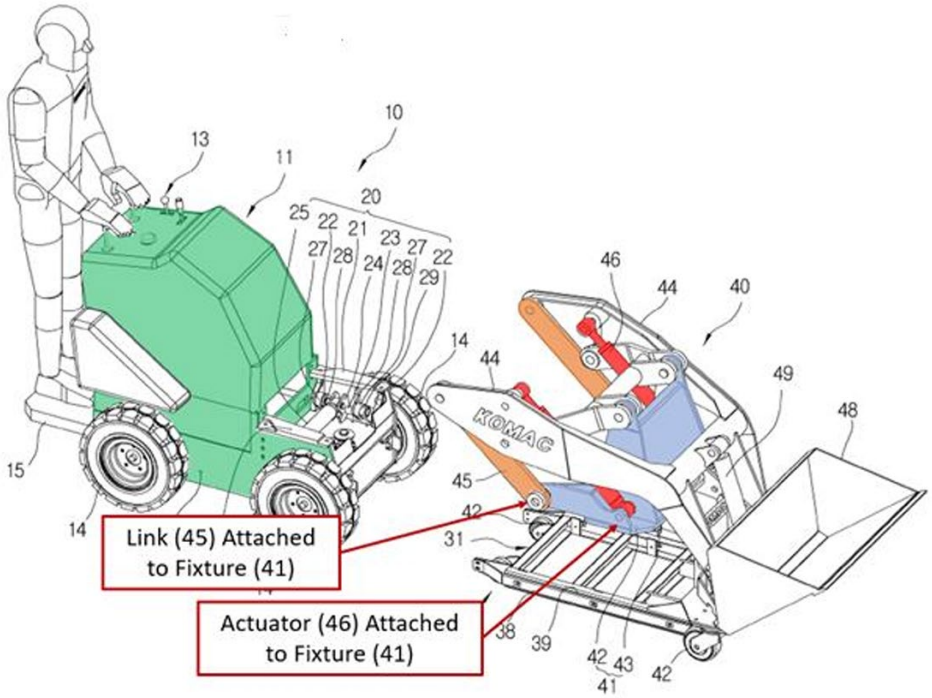

PO Resp. 38 (providing annotated Figure from Fleming Decl. ¶ 125). In the annotated version of Figure 1 of KR996 above, Patent Owner added (1) green shading on certain structures, (2) a text box and arrow identifying "Link (45) Attached to Fixture (41)," (3) a text box and arrow identifying "Actuator (46) Attached to Fixture (41)," (4) orange shading identifying two links 45, (5) red shading identifying two actuators (i.e., boom cylinders) 46, and (6) blue shading identifying fixture 41. *Id.*

Patent Owner argues that one of ordinary skill in the art "would not consider the detachable fixture (41)"—in blue shading above—"to be a part of the loader support (i.e., primary supporting structure) of KR996's machine." PO Resp. 39 (citing Fleming Decl. ¶¶ 126–132); *see also* PO

Sur-reply 20 (repeating that one of ordinary skill in the art "would not consider the detachable fixture (41) of the KR996 loader unit to be part of the primary supporting structure of KR996's machine"). In support, Patent Owner contends that "KR996 expressly teaches that fixture (41) is routinely detached from the machine and left aside while the machine performs other work." PO Resp. 39 (citing Ex. 1005, code (57), ¶¶ 1, 11, 12, 13; Fleming Decl. ¶ 130).

According to Patent Owner, one of ordinary skill in the art "would consider fixture (41) to be *secondary* structure, in contrast to the true 'loader support,' main body (11), which is present during all modes of operation (shaded in green below)":

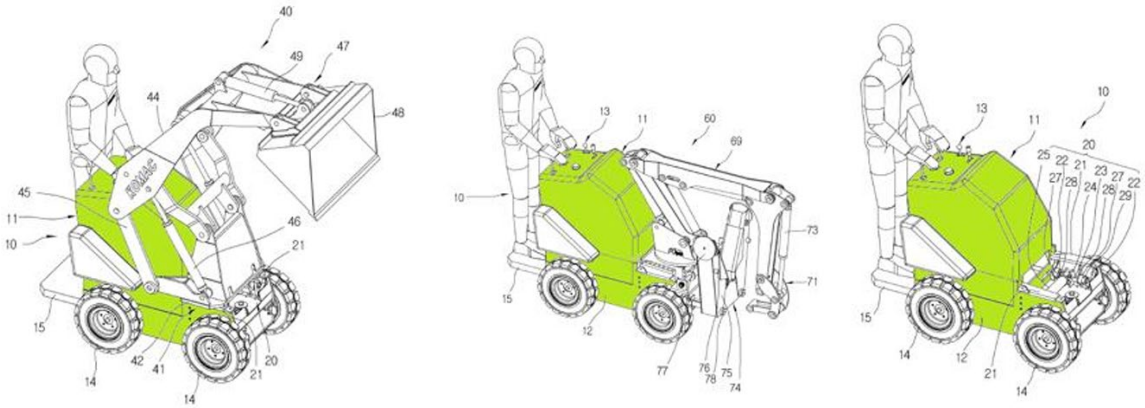

PO Resp. 39–40 (providing annotated Figure from Fleming Decl. ¶ 131). In the annotated versions of Figures 1, 9, and 19 of KR996 above, Patent Owner added green shading on certain structures. *Id.*

The dispute between the parties for this ground hinges on one factual determination: whether one of ordinary skill in the art at the time of the invention would have understood fixture 41 in KR996 (shaded in blue in the annotated Figure 1 three paragraphs above) to be a "loader support" (or, in the alternative, part of a "loader support" (*see* Pet. 30–31 (including main

body 11 and side plates 12 in KR996 in the identified "loader support")).[13] For the reasons below, the complete record developed at trial more strongly supports Petitioner's position that one of ordinary skill in the art would have understood fixture 41 as a "loader support" (or, in the alternative, part of a "loader support").

Patent Owner presents arguments as to the grounds based on KR996 in this proceeding as if independent claim 1 recited the term "mainframe" (which it does not). *See* PO Resp. 37–40. As discussed above (*see* § II.E.2), we do not agree with Patent Owner that "loader support" (in independent claim 1) should be construed the same as "mainframe" in the related proceedings. Thus, we apply the plain and ordinary meaning of "loader support." *See* Ex. 1020 at 5 (the Iowa District Court stating that this term "will be given [its] plain and ordinary meaning").

The plain and ordinary meaning of the term "loader support" is a structure that supports a "loader." *See* Dec. Inst. 22, *cited at* Pet. Reply 15. When configured for loader operations (which Patent Owner acknowledges

---

[13] We use certain annotated figures from KR996 provided by Patent Owner in the discussion here to illustrate more easily the difference of positions between the parties as to the structures in KR996 that would have been considered a "loader support." We note, however, that the combined structures identified by Patent Owner (1) in green (agreed upon as part of the alternative "loader support") and (2) in blue (identified *only by Petitioner* as part of the alternative "loader support") appear to be a subset of the structures identified by Petitioner as the alternative "loader support." *See, e.g.*, Pet. Reply 16–17; Velinsky Reply Decl. ¶ 4; Pet. 29 (discussing the specific structures included in the "loader support"). Put simply, Petitioner's assertions as to the particular structures in KR996 comprising the "loader support" control over Patent Owner's *presented understanding* of Petitioner's positions.

KR996 discloses[14]), fixture 41 in KR996—i.e., at least part of the identified "loader support" (Pet. 28–31)—"support[s] the attached loader unit 40 having loader arms of the booms 44." Pet. 29; Velinsky Pet. Decl. ¶ 71 (same); *see also* Pet. 31 (discussing structures that are "part of a frame or body of the KR996 vehicle and also provide structural and weight-bearing support for the loader unit 40, when in operation, in addition to support for other features such as the control station and drive mechanism" (citing Velinsky Pet. Decl. ¶ 76)); *see, e.g.*, Ex. 1005, Figs. 7–9 (showing the vehicle of KR996 in operation).

The cited testimony of Dr. Velinsky supports these positions, explaining that one of ordinary skill in the art would have understood fixture 41 in KR996 to be at least part of a "loader support." *See* Velinsky Pet. Decl. ¶¶ 71–72 ("In particular, the *loader support* includes the portions of the frame of the KR996 vehicle that when in operation, support the attached loader unit 40 having loader arms of the booms 44. . . . In particular, the *loader support* of KR996 includes the portions of the frame having pivot attachments with respective ends of each of the intermediary parts (*i.e.*, the boom cylinder 46, link 45, and forward link of [1.5]-[1.7] below), which are connected at their opposing ends to a boom 44 of the loader unit 40. For example, KR996's *loader support* includes the bracket to which the link 45 and boom cylinder 46 attach, as well as the frame protrusion, connected to the bracket, to which the forward link attaches."),

[14] *See* PO Resp. 23 (discussing a "fifth mode" in which "the machine is operated with the loader attached to, for example, clear construction debris from the site").

¶ 75 (stating, in the alternative, that "KR996's *loader support* also includes its other frame portions including main body 11 and side plates 12" as "[t]hese portions are part of a frame of the vehicle and also provide structural and weight-bearing support for the loader unit 40, when in operation, in addition to support for other features such as the control station and drive mechanism"). In contrast, the pertinent testimony of Dr. Fleming addresses the loader support limitations as if they recited the term "mainframe" under Patent Owner's proposed construction. *See* Fleming Decl. ¶¶ 118–133; *see also id.* ¶ 121 (Dr. Fleming acknowledging that he "construed 'mainframe' and 'loader support' to have the same meaning").

For the reasons above, we find, based on the complete record, that Petitioner has shown by a preponderance of the evidence that KR996 discloses the loader support limitations.

b. The Remaining Limitations of Claim 1

To address the remaining limitations in claim 1, Petitioner discusses why KR996, both with and without modification, discloses each limitation. *See* Pet. 23–46; Velinsky Pet. Decl. ¶¶ 55–120. Patent Owner does not present arguments for these limitations.

We find, based on the complete record, that Petitioner has demonstrated by a preponderance of the evidence that KR996, both with and without modification, discloses the remaining limitations in claim 1. We also determine that, to the extent necessary, Petitioner has adequately explained why one of ordinary skill in the art would have had reason to modify KR996 as proposed and that there would have been a reasonable expectation of success.

c. Objective Indicia of Nonobviousness

(1) Legal Standards

Objective evidence of non-obviousness "may often be the most probative and cogent evidence in the record" and "may often establish that an invention appearing to have been obvious in light of the prior art was not." *Transocean Offshore Deepwater Drilling, Inc. v. Maersk Drilling USA, Inc.*, 699 F.3d 1340, 1349 (Fed. Cir. 2012). Thus, notwithstanding what the teachings of the prior art would have suggested to one skilled in the art, secondary considerations (objective evidence of non-obviousness) may lead to a conclusion that the challenged claims would not have been obvious. *In re Piasecki*, 745 F.2d 1468, 1471–72 (Fed. Cir. 1984). Our obviousness analysis includes consideration and weighing of Patent Owner's objective indicia of non-obviousness.

In order to accord substantial weight to secondary considerations in an obviousness analysis, "the evidence of secondary considerations must have a 'nexus' to the claims, i.e., there must be 'a legally and factually sufficient connection' between the evidence and the patented invention." *Henny Penny Corp. v. Frymaster LLC*, 938 F.3d 1324, 1332 (Fed. Cir. 2019) (quoting *Demaco Corp. v. F. Von Langsdorff Licensing Ltd.*, 851 F.2d 1387, 1392 (Fed. Cir. 1988)); *Quanergy Sys., Inc. v. Velodyne Lidar USA, Inc.*, 24 F.4th 1406, 1417 (Fed. Cir. 2022).

Although the patent owner bears the initial burden of proving a nexus (*WMS Gaming Inc. v. Int'l Game Tech.*, 184 F.3d 1339, 1359 (Fed. Cir. 1999)), a presumption of nexus may be appropriate if the patent owner shows "the asserted objective evidence is tied to a specific product and that product 'embodies the claimed features, and is coextensive with them.'"

Polaris Indus, Inc. v. Arctic Cat, Inc., 882 F.3d 1056, 1072 (Fed. Cir. 2018) (quoting *Brown & Williamson Tobacco Corp. v. Philip Morris Inc.*, 229 F.3d 1120, 1130 (Fed. Cir. 2000) (emphasis added)); *Quanergy*, 24 F.4th at 1417. On the other hand, "[w]hen the [product] is not coextensive with the patented invention—for example, if the patented invention is only a component of a commercially successful machine or process," the patent owner is not entitled to a presumption of nexus. *Demaco*, 851 F.2d at 1392.

A patent owner may establish nexus, either through (1) the use of a rebuttable presumption that arises when certain conditions are met or (2) a direct showing of nexus. In the first, a patent owner may rely on a rebuttable presumption of nexus as follows:

> As first recognized in *Demaco* . . . , a patentee is entitled to a rebuttable presumption of nexus between the asserted evidence of secondary considerations and a patent claim if the patentee shows that the asserted evidence is tied to a specific product and that the product "*is* the invention disclosed and claimed." 851 F.2d at 1392 (emphasis added). That is, presuming nexus is appropriate "when the patentee shows that the asserted objective evidence is tied to a specific product and that product 'embodies the claimed features, and is coextensive with them.'" *Polaris Indus., Inc. v. Arctic Cat, Inc.*, 882 F.3d 1056, 1072 (Fed. Cir. 2018) (quoting *Brown & Williamson Tobacco Corp. v. Philip Morris Inc.*, 229 F.3d 1120, 1130 (Fed. Cir. 2000)) . . .
>
> Whether a product is coextensive with the patented invention, and therefore whether a presumption of nexus is appropriate in a given case, is a question of fact.

Fox Factory, Inc. v. SRAM LLC, 944 F.3d 1366, 1373 (Fed. Cir. 2019).

The court in *Fox Factory* further explained, with respect to a presumption of nexus, that "the degree of correspondence between a product and a patent claim falls along a spectrum," and that, "[a]lthough we do not

require the patentee to prove perfect correspondence to meet the co-extensiveness requirement, what we do require is that the patentee demonstrate that the product is essentially the claimed invention." *Id.* at 1374. The court in *Fox Factory* rejected the patent owner's argument that the co-extensiveness requirement is simply an inquiry into "whether the patent claims broadly cover the product that is the subject of the evidence of secondary considerations." *Id.* at 1377. Thus, simply showing that a patent claim broadly covers the commercial product being asserted as objective evidence of non-obviousness is not enough to show they are coextensive. *Id.* That is because "[a] patent claim is not coextensive with a product that includes a 'critical' unclaimed feature that is claimed by a different patent and that materially impacts the product's functionality." *Id.* at 1375. In contrast, "if the unclaimed features amount to nothing more than additional insignificant features, presuming nexus may nevertheless be appropriate." *Id.* at 1374. Based on the facts of the case in *Fox Factory*, the court found that "nexus may not be presumed" because "there are one or more features not claimed by the [challenged patent] that materially impact the functionality" of the products on which patent owner's presumption argument is based and the court rejected arguments that the patent claims broadly cover the product. *Id.* at 1376–77.

"A finding that a presumption of nexus is inappropriate does not end the inquiry into secondary considerations," however. *Fox Factory*, 944 F.3d at 1373. "To the contrary, the patent owner is still afforded an opportunity to prove nexus by showing that the evidence of secondary considerations is the 'direct result of the unique characteristics of the claimed invention.'" *Id.* at 1373–74 (quoting *In re Huang*, 100 F.3d 135, 140 (Fed. Cir. 1996)).

"Where the offered secondary consideration actually results from something other than what is both claimed and novel in the claim, there is no nexus to the merits of the claimed invention," meaning that "there must be a nexus to some aspect of the claim not already in the prior art." *In re Kao*, 639 F.3d 1057, 1068–69 (Fed. Cir. 2011).

Ultimately, we must weigh Patent Owner's objective evidence in the context of whether the claimed invention as a whole would have been obvious to a skilled artisan. *WBIP, LLC v. Kohler Co.*, 829 F.3d 1317, 1331–32 (Fed. Cir. 2016). Only if the patent owner presents a prima facie case of nexus does the burden of production shift to the patent challenger to adduce evidence showing that any commercial success or industry praise was due to extraneous factors other than the patented invention. *Demaco*, 851 F.2d at 1393.

(2) Patent Owner's Argument

Patent Owner contends that evidence of secondary considerations show that the claimed invention is non-obvious. PO Resp. 51–68.

As we explained when granting part of Petitioner's Motion to Exclude, Patent Owner's secondary considerations arguments cite to attorney arguments concerning secondary considerations in reexamination prosecution histories (Exs. 2002, 2014, 2015). *See* § II.D.2.a. Patent Owner's citations are not pin-point citations and encompass many pages of attorney argument. *See, e.g.*, PO Resp. 58 (citing Ex. 2002 at 170–191 (21 pages of attorney argument)). Because the citations encompass many pages, it is difficult to ascertain what information in the cited pages Patent Owner is relying upon.

It is not the responsibility of the Board to develop undeveloped arguments hinted at in the papers. *See United States v. Dunkel*, 927 F.2d 955, 956 (7th Cir. 1991) ("Judges are not like pigs, hunting for truffles buried in briefs."); *DeSilva v. DiLeonardi*, 181 F.3d 865, 866–67 (7th Cir. 1999) ("A brief must make all arguments accessible to the judges, rather than ask them to play archaeologist with the record."). For this reason, our rules prohibit incorporating arguments by reference from one document into another document. 37 C.F.R. § 42.6 ("Arguments must not be incorporated by reference from one document into another document.").

In as much as Patent Owner is attempting to incorporate attorney arguments from the prosecution history into its substantive papers, when evaluating the merits of the Patent Owner's evidence of secondary considerations, we will not consider the attorney argument from the reexamination prosecution history that are not sufficiently set forth in the Patent Owner's substantive papers in this proceeding. Even if we were to consider such arguments, they would be mere attorney argument. But mere attorney argument and conclusory statements that are unsupported by factual evidence are entitled to little probative value. *In re Geisler*, 116 F.3d 1465, 1470 (Fed. Cir. 1997); *Elbit Sys. of Am., LLC v. Thales Visionix, Inc.*, 881 F.3d 1354, 1359 (Fed. Cir. 2018) ("'[A]ttorney argument is not evidence' and cannot rebut other admitted evidence." (quoting *Icon Health & Fitness, Inc. v. Strava, Inc.*, 849 F.3d 1034, 1043 (Fed. Cir. 2017))).

To the extent that Patent Owner relies upon the evidence embedded in the attorney argument, we granted Petitioner's Motion to exclude the embedded documents and deposition testimony from Exhibits 2002, 2014, and 2015, when relied upon by Patent Owner for evidence of secondary

considerations. We, thus, find Patent Owner's secondary consideration arguments based solely on the embedded documents and deposition testimony unpersuasive. Below, we address the remainder of Patent Owner's arguments and evidence.

(3) Reexamination Prosecution Histories

Patent Owner argues that Petitioner was obligated to address in the Petition evidence of secondary considerations that was presented during the reexaminations of the '386 patent. PO Resp. 52–53. Patent Owner asserts: Petitioner's "failure to address [Patent Owner's] substantial objective indicia evidence should weigh in favor of the validity of" the challenged patent. *Id.* at 53. Patent Owner also argues that "[c]urrent guidelines require a decision contradicting a previous USPTO ruling to state in detail why overturning the earlier decision is warranted." PO Sur-reply 27 (citing Memorandum, "PTAB Consideration of Prior Findings of Fact and Conclusions of Law" (Sept. 16, 2025), "Memo").[15] According to Patent Owner, because Petitioner "has provided no compelling basis to contradict the Office's prior findings, the Board should find that the secondary-indicia evidence supports a finding of non-obviousness here." *Id.*

We are not persuaded by Patent Owner that because the reexamination examiner found the evidence of secondary considerations overcame the rejections at issue in the reexamination that we are required to do the same here. The Memorandum states:

> if the Board reaches an initial or final decision on a finding of fact or conclusion of law that is different than the prior finding

[15] *Available at* https://www.uspto.gov/sites/default/files/documents/Memo_re_prior_findings_of_fact_and_conclusions_of_law_9_16_25.pdf.

> or conclusion of the Office, district court, or the ITC, the Board shall explain in the institution or final written decision why a different outcome is warranted.

Memo 1. The Memorandum requires that the Board explain why a different outcome is warranted but does not mandate that the Board come to the same conclusion. *See id.*

A different outcome as to the patentability of the claims is warranted here because we are not evaluating the same ground of unpatentability that the examiner evaluated during the reexaminations. *See, e.g.*, Ex. 2015 at 10–16 (the reexamination examiner explaining why the evidence of secondary considerations overcame the prima facie showing of obviousness of a combination replacing a radial-lift arm of Dingo 322 Operator's Manual, Dingo 322 Parts Catalog's compact utility load with a vertical-lift arm of JP11-140900 (Komatsu Ltd.) skid steer). Petitioner's grounds of unpatentability here rely primarily upon KR966, which is a reference that was not evaluated during the reexaminations.

A further difference exists between the reexamination proceedings and this *inter partes* review in that the Federal Rules of Evidence apply to *inter parte* reviews. *See* 37 C.F.R. § 42.62. As discussed above (*see* § II.D.2.a), much of the secondary considerations evidence offered here is inadmissible hearsay under FRE 802 in this proceeding.

(4) Nexus

To establish nexus, Patent Owner argues that Vermeer's (i.e., Patent Owner's) CTX50 and CTX100, as well as Toro's TX1000 are "covered by" the challenged patent. PO Resp. 54 (citing Fleming Decl. ¶¶ 148–149;

Exs. 2022–2024). Petitioner responds that Patent Owner fails to establish the required nexus. Pet. Reply 26–28.

We do not need to reach a determination as whether Patent Owner has established the requisite nexus because we find that the admissible portion of Patent Owner's evidence of secondary considerations, even if nexus were presumed to exist, does not outweigh Petitioner's showing of obviousness.

(5) Commercial Success and Industry Praise

Patent Owner argues that evidence submitted during the reexaminations demonstrates commercial success. PO Resp. 54–55 (citing Ex. 2014 at 185; Ex. 2015 at 128–129, 218, 298–299, 301–302). To the extent that Patent Owner relies on inadmissible hearsay evidence from the reexamination prosecution histories to support its argument, we find unpersuasive Patent Owner's arguments of commercial success and industry praise. *See id.* at 54 (citing Ex. 2014 at 125, 183 (reexamination presentation slide discussing an Innovative Iron Award); Ex. 2015 at 126, 215 (same)).

Patent Owner also submits an article from Compact Equipment Magazine to show alleged industry praise for Toro's and Patent Owner's compact utility loaders with vertical lift. PO Resp. 54 (citing Ex. 2025, 1–2). We give this evidence some weight, but find that this article does not outweigh Petitioner's showing of obviousness over the prior art.

(6) Skepticism at the Time of Invention

Patent Owner argues that "evidence submitted to the Patent Office during the reexaminations further demonstrated that at the time of [Patent Owner's] invention, there was skepticism within the industry that vertical lift was a viable option for compact utility loaders due to their small size and

complexity." PO Resp. 55–56 (citing Ex. 2002 at 187, 736; Ex. 2014 at 34; Ex. 2015 at 16; Ex. 2006 ¶ 7, Ex. 2007, Fig. 3). To extent that Patent Owner relies on inadmissible hearsay evidence from the reexamination prosecution histories, we find this argument unpersuasive.

Patent Owner also points to a statement from U.S. Patent Publication No. 2016/0244937 A1, which reads "the use of such high lift loader arms on a compact utility loader has been considered difficult if not impossible due to size and durability constraints." PO Resp. 56 (quoting Ex. 2006 ¶ 7). We give this evidence some weight, but find that it does not outweigh Petitioner's showing of obviousness over the prior art.

(7) Unexpected Results

Patent Owner argues that "[t]he prosecution histories relating to the [challenged p]atent also contained evidence showing that the claimed invention surpassed expectations." PO Resp. 56 (citing Ex. 2014 at 34, 74, 120–121, 124, 142, 182). Patent Owner relies upon no evidence other than inadmissible hearsay evidence from the reexamination prosecution histories to support its argument. We, thus, are not persuaded by Patent Owner's argument of unexpected results and thus, give this argument little weight.

(8) Long-felt but Unresolved Need

Patent Owner argues that "[t]he prosecution histories also contain significant evidence of a long-felt need for a solution to the problem of low lift capacity on compact tool carriers." PO Resp. 57; *see id.* at 57–60 (citing Ex. 2002 at 170–191, 517–518, 542, 712, 736; Ex. 2014 at 121, 173; Ex. 2015 at 16) (entire argument). Patent Owner relies upon no evidence other than inadmissible hearsay evidence from the reexamination prosecution histories to support this argument. We, thus, are not persuaded

by Patent Owner's argument of long-felt but unresolved need and thus, give this argument little weight.

(9) Copying

Patent Owner contends that when Petitioner "designed its first compact utility loader [(the SCL1000)] it intentionally copied the vertical-lift loader arm configuration claimed in" the challenged patent. PO Resp. 60–61; *see also id.* at 62. Patent Owner argues that, because Petitioner's dealer surveys indicate a desire for a vertical-lift compact utility loader and Petitioner performed competitor research, including researching Patent Owner's compact utility loader, Petitioner's SCL1000 must be a copy of the claimed invention of the challenged patent. *Id.* at 60–68. Patent Owner's evidence, however, does not persuasively show that Petitioner's SCL1000 is a copy of claimed invention of challenged patent. *See id.* at 67–68 (citing Ex. 2026 at 50–52, 114). Although Patent Owner's evidence broadly outlines design requirements for a vertical-lift compact utility loader, the evidence does not depict or otherwise provide sufficient details so as to show that the SCL1000 is a copy of claimed invention of the challenged patent. *See* Ex. 2026 at 50–52, 114; *see also Liqwd, Inc. v. L'Oreal USA, Inc.*, 941 F.3d 1133, 1137 (Fed. Cir. 2019) ("Evidence of copying may include internal documents, direct evidence such as photos of patented features or disassembly of products, or access and similarity to a patented product."). We, thus, give Patent Owner's evidence of copying little weight.

(10) Conclusion as to Objective Indicia

We have considered, as a whole, all of Patent Owner's arguments and admissible evidence concerning secondary considerations. If we were to

presume nexus, we give some weight to Patent Owner's admissible evidence of industry praise and skepticism at the time of invention.

d. Conclusion as to Independent Claim 1

For the reasons discussed above (§§ II.F.2.a–b), the evidence presented by Petitioner strongly indicates that claim 1 is anticipated by KR996 and would have been obvious based on KR996, as modified. For the reasons also discussed above (§ II.F.2.c), if we were to presume nexus, we give some weight to Patent Owner's admissible evidence of industry praise and skepticism at the time of invention in favor of nonobviousness. When considering all the evidence of obviousness and nonobviousness together (*see In re Cyclobenzaprine Hydrochloride Extended-Release Capsule Patent Litig.*, 676 F.3d 1063, 1079 (Fed. Cir. 2012)), we find Petitioner's strong evidence of obviousness outweighs Patent Owner's objective indicia of nonobviousness. Thus, we conclude Petitioner has demonstrated by a preponderance of the evidence that claim is anticipated by KR996 and would have been obvious based on KR996.

3. Claim 2

Claim 2 recites: "The loader apparatus as set forth in claim 1 wherein the loader support incorporates a single weldment." Ex. 1001, 7:19–20. As to the scope of this claim, Patent Owner argues that this additional limitation "requires that all of the portions of the loader support constitute a single, unitary weldment, as shown, for example, in the embodiment shown in Figure 4" of the challenged patent. PO Resp. 40 (citing Fleming Decl. ¶ 134). Petitioner, in contrast, asserts that "'incorporates' is an open-ended term analogous to *includes*." Pet. Reply 17 (citing Ex. 1053 (Oxford

Dictionary of English, third edition) at 4 (defining "incorporate" as "include")).

The complete record supports Petitioner's position. Specifically, based on the plain meaning of "incorporates," claim 2 requires that the "loader support" *includes*—rather than *is* or *constitutes*—a single weldment. *See* Pet. Reply 17 (citing Ex. 1053 at 4). In paragraph 134 of Dr. Fleming's Declaration, he merely repeats Patent Owner's claim construction position without evidence to support that position. *See* Fleming Decl. ¶ 134 ("Claim 2 depends from independent claim 1, and further requires that the "loader support incorporates a single weldment." This additional claim limitation requires that all of the portions of the loader support constitute a single, unitary weldment, as shown, for example, in the embodiment shown in Figure 4 of the '891 patent." (with no citations)).

Although Patent Owner and Dr. Fleming state that the Figure 4 embodiment shows a "loader support [that] constitute[s] a single, unitary weldment," neither explains the basis for that assertion. *See* PO Resp. 40; Fleming Decl. ¶ 134. As noted above, the Specification discloses an embodiment in which the "mainframe" is a "single weldment," but the Specification does not indicate that Figure 4 shows that embodiment. *See* Ex. 1001, 4:15–18. But claim 2 recites a "loader support" rather than a "mainframe." Further, even if Figure 4 *does* show a single-weldment embodiment, we will not limit claim 2 to that embodiment solely on that basis, especially when the claim language recites a broader requirement. *See Anchor Wall Sys., Inc. v. Rockwood Retaining Walls, Inc.*, 340 F.3d 1298, 1306–07 (Fed. Cir. 2003) (stating that "the mere fact that the patent

drawings depict a particular embodiment of the patent does not operate to limit the claims to that specific configuration").

In the Sur-reply, Patent Owner asserts that we should not reach this issue because it was not raised in the Petition. *See* PO Sur-reply 18–19. According to Patent Owner, at that time, Petitioner only argued "that it would have been obvious to weld 'portions' of KR996's frame together to form a single weldment." *Id.* at 19 (citing Pet. 47–48). We disagree.

Although Patent Owner is correct that Petitioner did not expressly present a claim construction for claim 2 in the Petition, there, Petitioner clearly provided *two alternative bases* for that claim: one applying Petitioner's current construction and one applying Patent Owner's. *See* Pet. 46–48 (citing Velinsky Pet. Decl. ¶¶ 121–126). Specifically, Petitioner first presented an argument under its own *broader* construction, stating that "KR996 describes a loader support that would be recognized as incorporating a single weldment as it is a common technique for forming a frame such as illustrated in KR996" and that, further, one of ordinary skill in the art "would have found it obvious to form one or more portions of the *loader support* of KR996 . . . as a *single weldment* because use of welding to join components of a support frame for a loader apparatus was a well-known method of fabrication." Pet. 47 (citing Velinsky Pet. Decl. ¶¶ 122–123). With the phrase "one or more portions" (in the second statement quoted previously), Petitioner includes the possibility that only one *portion* of the "loader support" is a single weldment, meaning that *the entire* "loader support" need not be a single weldment, thereby falling within Petitioner's proposed construction, but not Patent Owner's. Indeed, this discussion is cited by Petitioner as including (even if implicitly) its broader claim

construction argument. *See* Pet. Reply 17 ("Thus, it is uncontested that KR996 teaches or renders obvious the relevant structure including a single weldment" and citing pages 47 and 48 of the Petition).

Second, after applying the broader construction, Petitioner presents an *alternative* argument applying the same narrower claim construction for claim 2 that Patent Owner ended up presenting in the Response:

> To the extent Patent Owner argues certain components of the *loader support* are required to be coupled by a weldment, [one of ordinary skill in the art] would have been motivated to form KR996's loader support consisting of a *single weldment* because the fastening method was well within their skill set and provides benefits discussed above to predictably form a welded structure.

Pet. 48 (citing Velinsky Pet. Decl. ¶ 125). Because Petitioner presented its broader construction of claim 2 in the Petition (Pet. 46–48), we consider the issue of claim construction in this Final Decision.

Patent Owner also contends that Petitioner's broader construction should be rejected because "it reads the term 'single' out of the limitation entirely." PO Sur-reply 19. According to Patent Owner, "[a]ny construction that would allow the loader support to include 'one or more portion**s**' formed as a single weldment necessarily requires the term 'single' to mean *at least* one, rather than *only* one." *Id.* at 19–20 (quoting Pet. Reply 17). We again disagree.

One exemplary "loader support" falling within the scope of Petitioner's construction (with which we agree) could—contrary to Patent Owner's argument—comprise *only one* weldment (made of more than one portion) and have other portions that are held to the "loader support" with, for example, nuts and bolts. *See* Pet. 47 & n.6 (discussing nuts and bolts as

possible other fasteners in the context of this claim). For example, if the "loader support" was made up of five separate subcomponents ("portions") A through E, "some portions" (using Patent Owner's language)—say A through C—could be welded together in a "single weldment," and portions D and E could be fastened with nuts and bolts. That embodiment would fall within the scope of Petitioner's proposed construction and, contrary to Patent Owner's argument, still have *only one* weldment.

Patent Owner also raises an argument based on a statement by the examiner in an *ex parte* reexamination of U.S. Patent No. 9,321,386 B1 ("the '386 patent"), an ancestor to the challenged patent.[16] *See* Ex. 1001, code (63) (stating the challenged patent's relationship to the '386 patent). Specifically, Patent Owner argues that Petitioner's broader construction of claim 2 "contradicts the USPTO's prior interpretation of this term, which has consistently been construed as a loader support that '**comprises a single part**.'" PO Sur-reply 20 (citing IPR2025-00167, Ex. 1031 at 402).

As background, in a prior reexamination certificate issued April 12, 2018, the '386 patent included newly added claim 63, which had the same additional limitation as claim 2 in this proceeding: "wherein the mainframe incorporates a single weldment." IPR2025-00167, Ex. 1031 at 551. In a Detailed Request for *Ex Parte* Patent Reexamination filed the following day, as to claim 63, the requester relied on a parts catalog showing a mainframe allegedly consisting of a "single part." *Id.* at 512, 529 (showing filing date). In the first Office Action after granting the next

[16] As noted above (*see* § I.B), claims of the '386 patent are challenged in related IPR2025-00167 through -00169.

reexamination, the examiner essentially agreed with the requester's argument as to the parts catalog disclosing a mainframe "compris[ing] a single part." *Id.* at 402. Patent Owner did not separately argue against that finding in the latter reexamination. *Id.* at 184–186.

The record here does not show that the USPTO agreed with Patent Owner's narrower construction of the claim language here. Instead, we view the reexamination examiner as merely acknowledging that a mainframe made of a "single part" (apparently welded) *clearly* falls within the scope of the claim language at issue in that it satisfies *both* possible constructions: (1) that the mainframe *includes* a single weldment (i.e., Petitioner's proposed construction here) and (2) that the mainframe *is* a single weldment (Patent Owner's proposed construction). Because Patent Owner's proposed construction is subsumed within the scope of Petitioner's proposed construction, and the reexamination examiner found that the prior art fell within the *narrower* construction, the Examiner did not have to address the particular claim construction issue before us now.

Although the reasons above are sufficient to support Petitioner's proposed construction of claim 2, an additional argument based on claim differentiation, presented by Petitioner, further supports that conclusion. Specifically, in the Reply, Petitioner notes that related U.S. Patent No. 12,098,063 B2 (at issue in related PGR2025-00016 (*see* § I.B)) contains both dependent claim 3 (adding "wherein the mainframe is a single weldment")[17] and dependent claim 7 (adding "wherein the mainframe incorporates a single weldment"). *See* Pet. Reply 18. Because all five U.S.

[17] Claim 3 is not challenged in PGR2025-00016.

Patents challenged in these seven related proceedings share the same specification (all being continuations from the '386 patent[18]), we must interpret claim terms consistently across all the patents at issue. *See SightSound Techs., LLC v. Apple Inc.*, 809 F.3d 1307, 1316 (Fed. Cir. 2015) ("Where multiple patents 'derive from the same parent application and share many common terms, we must interpret the claims consistently across all asserted patents.'" (quoting *NTP, Inc. v. Research In Motion, Ltd.*, 418 F.3d 1282, 1293 (Fed. Cir. 2005))). Although "the doctrine of claim differentiation is not as strong across related patents as it would be if the different claim limitations appeared in the same patent" (*Clare v. Chrysler Grp. LLC*, 819 F.3d 1323, 1330 (Fed. Cir. 2016)), the presence of different language in claims 3 and 7 of the '063 patent provides at least some additional support for Petitioner's broader proposed construction of claim 2 in the patent challenged in this proceeding. For these reasons, the record supports, and we apply below, Petitioner's proposed construction of claim 2.

Turning now to the application, Petitioner presents two different arguments as to claim 2: one applying its own proposed construction and one applying Patent Owner's narrower construction. *See* Pet. 46–48. First, applying its own proposed construction, Petitioner argues that "KR996 describes a loader support that would be recognized as incorporating a single weldment as it is a common technique for forming a frame such as illustrated in KR996" and that, further, one of ordinary skill in the art "would have found it obvious to form one or more portions of the *loader*

[18] *See* PGR2025-00016, Ex. 1001, code (63) (listing all five patents in these proceedings as issuing from a string of continuation applications).

support of KR996 . . . as a *single weldment* because use of welding to join components of a support frame for a loader apparatus was a well-known method of fabrication." Pet. 47 (citing Velinsky Pet. Decl. ¶¶ 122–123). Petitioner adds that one of ordinary skill in the art would have recognized "that there are known trade-offs in the choice between a single weldment and attachment, for example, by nuts and bolts," such as "aesthetics, manufacturability, [and] reliability" of the connection. Pet. 47 (citing Velinsky Pet. Decl. ¶ 124). According to Petitioner, "[o]ne benefit is connecting pieces by a weld allows for easy implementation and forming a smooth, continuous surface." *Id.* (citing Velinsky Pet. Decl. ¶ 124). Petitioner notes Patent Owner did not contest during prosecution the finding that the added limitation in claim 2 would have been an obvious design choice. Pet. 48 (citing Ex. 1002 at 144; *In re Larson,* 340 F.2d 965, 968 (CCPA 1965)). Second, Petitioner presents an alternative argument under Patent Owner's narrower construction. *See* Pet. 48.

Patent Owner does not address Petitioner's first argument, which applies Petitioner's construction of claim 2 (which we adopt above). Instead, Patent Owner presents arguments as if Petitioner had *only* argued a proposed modification of welding the identified "loader support" into a "single weldment"—i.e., under Patent Owner's narrower proposed construction. *See, e.g.*, PO Resp. 41 (stating that Petitioner and Dr. Velinsky "argue that [one of ordinary skill in the art] would have been motivated to weld the main body (11) and fixture (41) together to create a single weldment mainframe"); PO Sur-reply 21 (arguing that Petitioner has "failed to establish that modifying KR996's frame to have a single-weldment loader support would have been obvious" to one of ordinary skill in the art).

On the complete record, we find that Petitioner has shown by a preponderance of the evidence that KR996 discloses or suggests the additional limitation of claim 2, under Petitioner's broader construction (which we apply above). As noted by Petitioner (Pet. Reply 17), Dr. Fleming acknowledges that both KR996's fixture 41 and main body 11[19] are most likely entirely welded. Ex. 1043 (Fleming Depo. Tr.), 113:12–114:9. We agree with that assessment and find that KR996 implicitly teaches both fixture 41 and main body 11, individually and collectively, as including at least some welded sub-structures. Because the record supports Petitioner's position that fixture 41 in KR996 is a "loader support" (*see* § II.F.2.a) and that fixture 41 implicitly includes at least some welded sub-structures, that logically leads to a determination that the identified "loader support" *includes* a "single weldment," as required by claim 2. Further, because the record supports Petitioner's alternative position that main body 11 and fixture 41 in KR996 together constitute a "loader support" (*see* § II.F.2.a) and that *both* fixture 41 and main body 11, individually and collectively, implicitly include at least some welded sub-structures, that logically leads to a determination that the alternative identified "loader support" *includes* a "single weldment."

Moreover, even if KR996 would not have been understood as implicitly teaching at least some welding within fixture 41 or main body 11, we are also persuaded by Petitioner's argument that one of ordinary skill in

[19] As a reminder, Petitioner identifies fixture 41 in KR996 as the "loader support" and, in the alternative, identifies at least main body 11 and fixture 41 as the "loader support." *See* § II.D.2.a.

the art would have had technical reasons to weld together, for example, *at least some* of the (potential) sub-structures of fixture 41 or main body 11. *See* Velinsky Pet. Decl. ¶¶ 123–124, *cited at* Pet. 47–48. For example, Dr. Velinsky raises potential benefits to welding, such as reliability of the attachment, aesthetics, and structural rigidity. *Id.* ¶ 124. Patent Owner does not address or show deficiencies in these arguments or testimony.

For these reasons, we determine, based on the complete record, including the objective indicia of nonobviousness, that Petitioner has demonstrated by a preponderance of the evidence that claim 2 would have been obvious based on KR996.

4. Claims 3–8 and 10

For dependent claims 3–8 and 10 (all of which depend from claim 1), Petitioner contends that KR996, both with and without modification, satisfies each limitation. Pet. 48–60; Velinsky Pet. Decl. ¶¶ 127–153. Patent Owner does not present any arguments specifically addressing claims 3–8 and 10 but rather relies on the arguments addressing independent claim 1. *See* PO Resp. 37–40; PO Sur-reply 20.

We determine, based on the complete record, that KR996, both with and without modification, discloses the subject matter of claims 3–8 and 10. We also determine that, to the extent necessary, Petitioner has adequately explained why one of ordinary skill in the art would have had reason to modify KR996 as proposed and that there would have been a reasonable expectation of success. Based on the complete record, including the objective indicia of nonobviousness, we determine that Petitioner has demonstrated by a preponderance of the evidence that claims 3–8 and 10 are anticipated by KR996 and would have been obvious based on KR996.

G. Asserted Obviousness of Claim 9 Based on KR996 and Bares

Petitioner asserts that claim 9 would have been obvious based on KR996 and Bares. Pet. 19, 60–69; Pet. Reply 18–26. Patent Owner provides arguments specifically addressing this asserted ground. PO Resp. 41–50; PO Sur-reply 22–23. We first summarize aspects of Bares.

1. Overview of Bares

In this asserted ground, Petitioner relies on Bares, in addition to KR996 (summarized above (*see* § II.F.1)). Bares discloses a small loader. Ex. 1010, 1:9–11. Figures 6 and 8 of Bares are reproduced below:

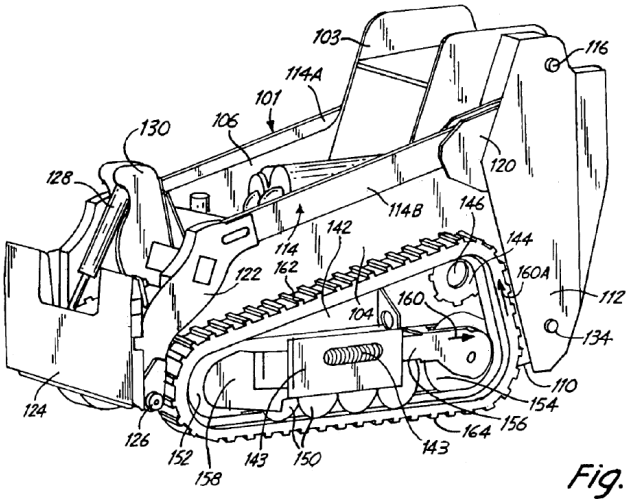

Fig. 6

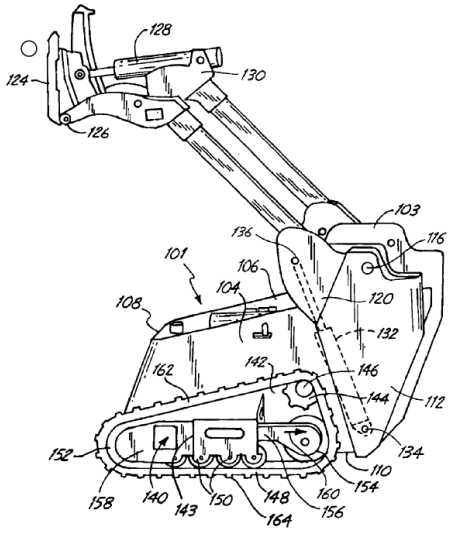

Fig. 8

Figure 6 is a side perspective view of "a modified form of the invention schematically showing an alternate form of track drive and modified loader arms," and Figure 8 is a perspective view showing the lift arms of the Figure 6 embodiment in a raised position. *See* Ex. 1010, 2:24–27, 2:30–31. In the depicted embodiment, track 148 can be placed over drive sprocket 144, and wheels 150/152/154 "so there is a full drive assembly made apart from the loader body." *Id.* at 6:12–17.

2. Dependent Claim 9

Petitioner contends that KR996, modified based on Bares, satisfies the additional limitations of claim 9. Pet. 60–69. To support its arguments, Petitioner identifies certain passages in the cited references and explains the significance of each passage with respect to the corresponding claim limitation. *Id.* Petitioner also articulates reasons to combine the relied-upon aspects of KR996 and Bares and explains why there would have been a reasonable expectation of success. Pet. 62–65.

Patent Owner argues that one of ordinary skill in the art would not have had reason to combine KR996 and Bares. *See* PO Resp. 41–50; PO Sur-reply 22–23. Patent Owner also relies on its prior arguments that KR996 does not disclose the "loader support" limitations in independent claim 1. *See* PO Resp. 50. In addition, Patent Owner relies on the same evidence of objective indicia of nonobviousness discussed above. *See* PO Resp. 51–68; PO Sur-reply 21–27. We address each issue in turn.

a. The Reasons to Combine KR996 and Bares

Petitioner presents reasons why one of ordinary skill in the art would have combined KR996 and Bares and why the proposed combination would have had a reasonable expectation of success. *See* Pet. 62–65; Velinsky Pet. Decl. ¶¶ 157–162. After discussing why KR996 and Bares are analogous art to the claimed invention, Petitioner states that one of ordinary skill in the art "would have been motivated to combine the teachings of Bares with KR996 to produce a predictable and beneficial configuration of a tracked vehicle" in that "[t]he simple substitution of Bares' track assembly for the wheels in the KR996 vehicle would have been predictable with a reasonable expectation of success that both KR996 and Bares relate to similar vehicle types with a

similar mainframe having a drive mechanism attached thereto." Pet. 63 (citing Velinsky Pet. Decl. ¶¶ 158–162).

Petitioner asserts that "designing this vehicle type with a drive mechanism of either a wheeled assembly or a track assembly was a known alternative" and that the industry recognized that wheeled and tracked configurations were known alternatives to each other. Pet. 63–64 (citing Velinsky Pet. Decl. ¶ 159; Ex. 1009, 4:30–39 ("The propulsion system for moving the loader is disclosed specifically as a track unit. However, skid steer loaders are commonly mounted on wheels on the sides that are driven simultaneously on each side, from a separate motor on each side."); Ex. 1032 ¶ 11 (disclosing a "wheeled unit" as an alternative to a "track frame"); Ex. 1010, 2:1–2 (Bares, disclosing a tracked configuration and then stating: "If drive wheels and rubber tires are used, the same concept can be utilized."); Ex. 1015 at 2; Ex. 1016 at 5). Dr. Velinsky testifies that it was a known practice in the compact utility loader industry for a buyer to choose between a wheeled and tracked configuration, depending on the terrain at the location of use. Velinsky Pet. Decl. ¶ 160, *cited at* Pet. 64. According to Petitioner, some desired applications may call for a tracked configuration to provide (1) a lower pressure to the supporting surface, such as when the surface is softer, (2) better traction, or (3) to cross holes or trenches that wheels may sink into. *See* Pet. 64 (citing Velinsky Pet. Decl. ¶ 161).

Petitioner adds that one of ordinary skill in the art "would have recognized a reasonable expectation of success in providing a track assembly on the KR996 vehicle as track assemblies were well known in the art and perform the same function as the wheel mounted drive mechanism illustrated in KR996" and states, "[t]his is a simple substitution of one

known, equivalent element for another to obtain predictable results and performing the same function." Pet. 64–65 (citing Velinsky Pet. Decl. ¶ 162).

Patent Owner presents two overall arguments addressing Petitioner's positions. First, Patent Owner asserts that the wheels in KR996 and their specific configuration play a critical role in the detachability of the bogies in KR996 such that replacing the wheels with Bares's tracks (as proposed) would undermine that functionality. *See* PO Resp. 41–47. For the reasons below, this argument does not identify a deficiency in Petitioner's proposed combination. We address below the sub-issues raised by Patent Owner.

Under this first argument, Patent Owner initially contends that one of ordinary skill in the art would not have replaced KR996's wheels with tracks because of the allegedly "critical role" the wheels in KR996 play in "achieving the quick-and-easy detachability of the loader unit and arm unit." PO Resp. 42 (citing Fleming Decl. ¶¶ 72–75, 99–111). Patent Owner asserts that "KR996 teaches that the inner sidewall of the front tires must be able to precisely interface with the guide plates of the bogies that carry the loader arm attachment unit and the breaker arm attachment unit." *Id.* (citing Fleming Decl. ¶¶ 72–75, 99–111). In support, Patent Owner cites numerous paragraphs of KR996 and highlights liners 39 as allegedly "allow[ing] the operator to precisely adjust the distance between the guide plates so that *the tire flexion can properly grip* the guide plates." *Id.* at 42–43 (emphasis

added) (citing Ex. 1005 ¶¶ 52, 53, 60, 69, 71, 74, 78, 80, 83, 86, 87; Fleming Decl. ¶¶ 101–102; Ex. 2020 (Velinsky Depo. Tr.), 95:16–96:1, 97:16–21[20]).

The record does not support Patent Owner's or Dr. Fleming's understanding of the operation of KR996. As an initial matter, KR996 does not expressly disclose, and the record does not contain sufficient technical reasoning to support that KR996 implicitly discloses, that the tires in KR996 *flex* to *grip* the guide plates (38 or 56) during attachment of the bogies (30 or 50), as argued by Patent Owner. Indeed, none of the paragraphs cited in KR996 mention *flexing* of the tires or *gripping* the guide plates. *See* Ex. 1005 ¶¶ 52, 53, 60, 69, 71, 74, 78, 80, 83, 86, 87. Instead (as Petitioner notes), KR996 consistently describes that interaction differently: "guide plate (38) *contacts* the inner side of the wheel (14) and, *as the wheel (14) rotates in the forward direction*, *pulls* the bogie (30) into the front inner side of the vehicle (10)." *See, e.g.*, Ex. 1005 ¶ 52 (emphasis added), ¶ 60 (same for other guide plate and bogie); Pet. Reply 20–21. Dr. Fleming relies on the same paragraphs from KR996 as does Patent Owner, but he does not provide further technical reasoning as to why he infers the presence of "tire flexion" and "grip[ping] the guide plates" during the attachment/detachment processes. Fleming Decl. ¶ 102; *see id.* ¶¶ 99–103 (discussing this issue).

Patent Owner and Dr. Fleming also contend that Dr. Velinsky agrees with its "interpretation of KR996's functionality" as to the role of the tires in the attachment process. *See* PO Resp. 42 (citing Ex. 2020, 84:9–15);

[20] For the page numbering of Exhibit 2020, like Patent Owner, we cite to the native pagination (in the *upper* right corner) rather than the page numbered added for this proceeding (in the *lower* right corner).

Fleming Decl. ¶ 100 (same). The record does not support that view. In the cited deposition testimony, Dr. Velinsky was asked whether "the sidewalls of those tires interface with those structures identified at reference numeral 38 to grab the bogey and pull it closer to the machine?" to which he responded, "That helps pull it in, yes." Ex. 2020, 84:9–15; *see* Pet. Reply 21 n.9 (stating that Dr. Velinsky agreed that "an interface between tires and bogies 'helps pull in' the bogie"). The question did not reference "tire flexion" or "gripping the guide plates" and Dr. Velinsky's response appears instead to reflect KR996's consistent disclosure—i.e., that the guide plate "*pulls* the bogie (30) into the front inner side of the vehicle (10)" as the wheels rotate forward. Ex. 1005 ¶ 52 (emphasis added).[21]

The fact that KR996 consistently discloses that the wheels (14) "rotate[] in the forward direction" while the guide plate (38) "pulls the bogie (30) into the front inner side of the vehicle (10)" leads us to understand that, during the attachment process, vehicle 10 drives over the essentially stationary bogie 30 with the inner side of the wheels contacting guide plate 38 as the vehicle drives forward. *See, e.g.*, Ex. 1005 ¶ 52. With this, the disclosure of "pull[ing] the bogie (30) into the front inner side of the vehicle (10)" refers more to the relative motion of bogie 30 towards vehicle 10. The only alternative would be to assume that vehicle 10 stands stationary while wheels 14—attached to vehicle 10—rotate to pull in bogie 30. Given the

[21] Similarly, neither Patent Owner's questions nor Dr. Velinsky's responses regarding the role of liners 39 in KR996 mention *flexion* of the tires or *gripping* the guide plates, despite Patent Owner's argument to the contrary. *See* PO Resp. 43 (citing Ex. 1005 ¶ 53; Ex. 2020, 95:16–96:1, 97:16–21).

size and weight of vehicle 10, that assumption is not supported by the record. For these reasons, we agree with Petitioner that this argument by Patent Owner overstates the role of the tires in the attachment/detachment of the bogies in KR996. *See* Pet. Reply 20–21.

Patent Owner next argues that "tires have sidewalls that are flexible and bow out under the load of the machine" whereas "tracks are rigid." PO Resp. 43 (citing Fleming Decl. ¶ 103). According to Patent Owner, the alleged "rigidity prevents a track from being capable of gripping the guide plates of the bogie like a tire would." *Id.* (citing Fleming Decl. ¶ 103). As discussed above, however, KR996 does not support that "gripping the guide plates" occurs during the attachment/detachment processes.

Patent Owner also contends that "unlike the tires taught in KR996, the tread of a tracked system does not extend a significant height above the ground" and that, "[a]s such, that tread would not have the height necessary to grip the guide plates, which themselves are suspended above the ground on the wheels of the bogie." PO Resp. 43–44 (citing Fleming Decl. ¶ 104). Relatedly, Patent Owner adds that removing the wheels and tires in KR996 would "remove the key alignment feature those components provide" and "introduce a significant risk that the machine runs over the forks or tines of the bogie (the elongated structures that include the guide plates) or that they enter the track system and become jammed." *Id.* at 44 (citing Fleming Decl. ¶ 105).

As an initial matter, as discussed above, KR996 does not support that "gripping the guide plates" occurs during attachment or detachment such that any alleged difference in height would impact such processes. Moreover, neither Patent Owner nor Dr. Fleming provides evidence

supporting that the height of the tracks in the proposed modified device would be below guide plates 38 from KR996. *See* PO Resp. 43–44; Fleming Decl. ¶ 104. Regardless, as noted by Petitioner, the record supports that the height of the tracks in the proposed modified device would be sufficient to allow the portion of the tracks "extending vertically from the ground" to use guide plate 38 to align vehicle 10 and bogie 30 prior to attachment. *See* Pet. Reply 22 ("The guide plate 3[8] contacts with the drive mechanism (wheel 14/Bares' track) at the front of the vehicle 10 where the tire/track is extending vertically from the ground to over the front wheel (idler wheel 152/wheel 14)." (citing Ex. 1005, Figs. 7 & 8)).

As to the alleged "significant risk" that vehicle 10 "runs over the forks or tines of the bogie" or that those structures "enter the track system and become jammed," the record does not support the existence of that alleged concern for the proposed modified device but not the original device of KR996. *See* Pet. Reply 22–23 (arguing that Patent Owner's "alleged loss of [an] 'alignment feature' associated with wheels lacks any citation to KR996 and appears to be mere conjecture"). As discussed above, in the context of both KR996 (i.e., prior to modification) and the proposed modified device, the user would drive vehicle 10 over the selected bogie with the guide plates (38 or 56) "contact[ing]" the nearby structure(s) for alignment. *See* Ex. 1005 ¶ 52; Pet. Reply 22 ("Modification of the drive assembly from tire to track just means any desired contact locus is between the track and the bogie's guide plate (as opposed to a wheel and the bogie guide plate).").

Patent Owner has not adequately explained why a user of the proposed modified device would have such issues aligning the vehicle when, if anything (as noted by Petitioner), the proposed modified device would

have *more* structure under the central portion of the proposed modified device (with its tracks) to provide alignment to the guide plates than in the wheeled version in KR996. *See* Pet. Reply 23 (arguing that Patent Owner "simply ignores the features of Bares' rotating track (and plurality of rotating wheels with its assembly), which are all available to provide contact and directional force, if desired" (citing Ex. 1010, 5:33–43, 6:59–7:11)); *compare* Pet. 68 (showing a generalized representation of the proposed modified device with, e.g., four bogie wheels 150 and undercarriage housing 143 from Bares between front idler guide wheel 152 and rear track idler guide wheel 154), *with* Ex. 1005, Fig. 1). Dr. Fleming repeats the statements by Patent Owner with no additional technical reasoning to explain why such a "significant risk" would only occur in the proposed modified device. *See* Fleming Decl. ¶ 105.

Next, Patent Owner argues that Petitioner's reasons to combine KR996 and Bares are deficient because KR996 discloses the use of its device for *indoor* deconstruction work whereas, according to Patent Owner, Dr. Velinsky posits that one of ordinary skill in the art would have substituted the tracks of Bares for the wheels of KR996 "to accommodate uneven, rocky terrain and to lower ground pressure to avoid sinking or slipping on soft/muddy surfaces." PO Resp. 45 (citing Velinsky Pet. Decl. ¶ 160). Patent Owner goes on to discuss how, with the small wheels of KR996's bogie, one of ordinary skill in the art would have recognized that "the attachment/detachment feature can only function—if at all—indoors and on a level, clean surface (such as a concrete floor)." *Id.* at 46 (citing Fleming Decl. ¶ 110; Ex. 2020, 100:16–101:13); *id.* (discussing how these processes "require[] a smooth, flat, clean surface to function").

We disagree with the premise of Patent Owner's argument. Dr. Velinsky does not take the position that one of ordinary skill in the art would have modified KR996 with the tracks of Bares in order to then use the modified device in *any* terrain (including, ostensibly, outdoors)—no matter how uneven or muddy—thereby allegedly undermining the attachment/ detachment processes in KR996. Instead, Dr. Velinsky clearly states that even the "building deconstruction work" discussed in KR996 (¶ 1) provides a use environment that would "benefit from a tracked configuration" because that environment "can provide uneven terrain and debris that [the] vehicle must traverse." Velinsky Pet. Decl. ¶ 160, *cited at* Pet. 63–64; PO Resp. 45–46.[22] In other words, Dr. Velinsky and Petitioner take the position that the tracked configuration of the proposed modified device would provide *that* benefit—more easily traversing uneven surfaces and debris—even in the context of the *indoor* environment disclosed in KR996. *See* Velinsky Pet. Decl. ¶ 160; Pet. 64. Patent Owner does not dispute, and the record supports, that "uneven terrain" exists in the context of the indoor building deconstruction environments. *See* Pet. Reply 19–20 ("KR996 is directed to 'building deconstruction work,' which inherently involves uneven terrain and debris—conditions where tracks excel." (citing Velinsky Pet. Decl. ¶ 160; Ex. 1057 (screenshot of a YouTube video showing the use

[22] Indeed, the term "rocky terrain" only came up in a general discussion about how buyers in the relevant market choose between a wheeled or tracked configuration based on the "target terrain for the carrier's use," with Dr. Velinsky providing, as an example, that, "depending on the terrain, a buyer may choose a tracked assembly for example, if targeting applications with a more diverse or *rocky terrain*." Velinsky Pet. Decl. ¶ 160 (emphasis added).

of *tracked* compact utility loaders in indoor deconstruction work); Ex. 1062 (declaration authenticating Ex. 1057); Ex. 1056, 3:64–4:2 (disclosing the indoor use of a tracked compact utility loader); Ex. 1005 ¶ 54).

Further, Dr. Velinsky and Petitioner identify *other* benefits to the tracked configuration of the proposed modified device that would *also* apply in the context of the indoor building deconstruction environment: improved traction and "the ability to cross holes and trenches in which wheels would sink." Velinsky Pet. Decl. ¶ 160, *cited at* Pet. 64 (discussing these benefits); Pet. Reply 19 (repeating these benefits). Patent Owner has not addressed or shown error in these benefits to a tracked configuration. We find them to be supported by the record.

In the deposition testimony highlighted by Patent Owner for this argument (PO Resp. 45–46), Dr. Velinsky discusses the potential for "rubble" or other features on uneven terrain to impede the attachment/ detachment processes disclosed in KR996, but the discussion focuses on potential shortcomings of KR996's design *in general* (mostly the small wheels of the bogies), not on shortcomings of the proposed modified device in the manner *actually proposed* by Petitioner here (i.e., in the same environment disclosed in KR996). *See, e.g.*, Ex. 2020, 93:16–95:3 (discussing "[w]hat happens when the bog[ie] gets pushed up on a piece of rubble while the machine is trying to couple with it" when "this machine is being used in the exact environment the patent teaches[,] which is some kind of demolition space"), 99:22–102:1 (discussing difficulty with the attachment/detachment processes disclosed in KR996 on "anything other than a perfectly flat, clean surface"). But Patent Owner has not explained why shortcomings of KR996's design *in general*—such as the bogies' small

wheels—would have undermined Petitioner's proffered reasons to combine KR996 with Bares as proposed, especially when Petitioner is not proposing to change the use environment disclosed in KR996. *See* Pet. Reply 19–20 (arguing that Patent Owner's "operable terrain argument is based on [the] assumption that KR996 requires a 'level, clean surface' for its attachment/ detachment functions" and that, "[e]ven if true, this would only apply to the specific location where attachments/tools are changed—not to the overall operation of the KR996" machine; also stating that "operational advantages of tracks remain regardless of any attachment/detachment terrain limitations"). Stated differently, this alleged disadvantage of the proposed modified device would not have dissuaded the proposed modification because it was already present in the primary reference.

We turn now to the second overall argument (of two) addressing the reasons to combine KR996 and Bares. With this argument, Patent Owner contends that the proposed combination "causes significant interference between the track system and the tank structures on the mainframe," as allegedly shown in this figure from Dr. Fleming:

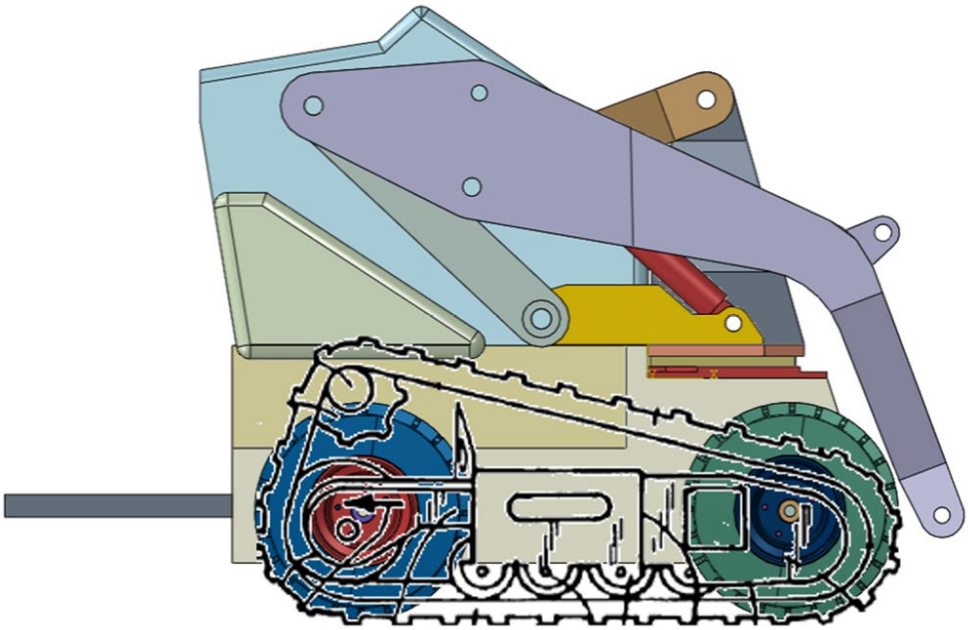

PO Resp. 47–48 (reproducing a figure from Fleming Decl. ¶ 115). The figure above shows Dr. Fleming's CAD model of an embodiment of the compact utility loader of KR996 with the tracks from Bares superimposed over the wheels. *Id.* at 48. Patent Owner adds that "this configuration would require a redesign of the fundamental structure and drivetrain of the KR996 patent." *Id.* From that, Patent Owner contends that one of ordinary skill in the art would not have been motivated to modify KR996 based on Bares nor had a reasonable expectation of success in the combination. *Id.* at 49–50.

Based on the complete current record developed at trial, this argument does not identify a deficiency in Petitioner's position as to the reasons to combine KR996 and Bares or the reasonable expectation of success. Specifically, we agree with Petitioner that this argument from Patent Owner is premised on bodily incorporation "based on a rigid, literal overlay of patent figures." *See* Pet. Reply 24; *In re Mouttet*, 686 F.3d 1322, 1332 (Fed.

Cir. 2012) ("It is well-established that a determination of obviousness based on teachings from multiple references does not require an actual, physical substitution of elements."); *see also* Pet. Reply 4–5 (section titled "PO argument is premised on bodily incorporation").

Dr. Fleming states that this configuration "would require a redesign of the fundamental structure and drivetrain of the KR996 patent," but that alleged redesign is only presumed necessary *after* bodily incorporating the structure from Bares. *See* Fleming Decl. ¶¶ 115–116. For the reasons explained at length in the Petition, we are persuaded that replacing a *wheeled* configuration with a *tracked* configuration for a compact utility loader—including the embodiment in KR996 argued by Petitioner—is a simple substitution and one of ordinary skill in the art would have had a reasonable expectation of success in the modification. *See* Pet. 62–65 (citing Velinsky Pet. Decl. ¶¶ 157–162); Pet. 65 ("This is a simple substitution of one known, equivalent element for another to obtain predictable results and performing the same function."); *KSR Int'l Co. v. Teleflex Inc.*, 550 U.S. 398, 416 (2007) ("[W]hen a patent claims a structure already known in the prior art that is altered by the mere substitution of one element for another known in the field, the combination must do more than yield a predictable result.").

As noted by Dr. Velinsky, *several* prior art references (including another by the same inventors as Bares (Ex. 1009)) as well as industry standards expressly highlight the interchangeability of wheeled and tracked configurations for compact utility loaders. Velinsky Pet. Decl. ¶ 159 (citing Ex. 1009, 4:30–39 ("The propulsion system for moving the loader is disclosed specifically as a track unit. However, skid steer loaders are commonly mounted on wheels" and that "[t]he propulsion system that

supports the loader for movement can be sets of wheels mounted in place of the tracks shown."); Ex. 1032 ¶ 11 ("The drive frame undercarriage 12 comprises a track frame substructure 24 and a plurality of drive tracks 26 mountable on the track frame substructure. Alternatively, the drive frame undercarriage 12 may be a wheeled unit."); Ex. 1015 (SAE J2752 – Personnel Protection for Compact Tool Carriers) at 2 (defining a compact tool carrier as a "self-propelled crawler [(i.e., a tracked)] or wheeled machine having an operating mass of less than 1500 kg with a rigid frame"); Ex. 1016 (ISO 6165 – Earth-Moving Machinery) at 5 (defining earth-moving machinery as "self-propelled or towed machine on wheels, crawlers or legs").[23] And Bares expressly states that "[i]f drive wheels and rubber tires are used, the same concept can be utilized" for the mechanism driving such wheels. Ex. 1010, 2:1–2, *cited at* Velinsky Pet. Decl. ¶ 159 & Pet. 60.

The brevity of these discussions in the prior art and related standards as to interchangeability supports that one of ordinary skill in the art would not have viewed the proposed modification as entailing nearly the level of technical skill or "fundamental redesign" argued by Patent Owner. Relatedly, the challenged patent discloses a tracked configuration, but notes that "[i]n other embodiments, the drive mechanism 18 includes wheels" with little other disclosure about wheeled configurations. Ex. 1001, 3:39–41; *id.* at 4:10–12 ("In the illustrated embodiment, the engine (not shown) and the drive mechanism 18 comprising tracks or wheels are directly connected to the mainframe 10."); *see also* Pet. Reply 25–26 (citing these aspects and

[23] The challenged patent highlights both of these standards to define compact tool carriers. *See* Ex. 1001, 1:23–31.

stating that the skills of one of ordinary skill in the art "to arrange the components is found in the context of the [challenged] patent itself, which does not illustrate its suggested wheel drive mechanism"). This brief disclosure in the challenged patent also supports the interchangeability of the wheeled and tracked configurations. *See Uber Techs., Inc. v. X One, Inc.*, 957 F.3d 1334, 1339 (Fed. Cir. 2020) ("The specification of the [patent-at-issue] is entirely silent on how to transmit user locations and maps from a server to a user's mobile device, suggesting that a person of ordinary skill in the art was more than capable of selecting between the known methods of accomplishing this."); *In re Epstein*, 32 F.3d 1559, 1568 (Fed. Cir. 1994) ("[T]he Board's observation that appellant did not provide the type of detail in his specification that he now argues is necessary in prior art references supports the Board's finding that one skilled in the art would have known how to implement the features of the references and would have concluded that the reference disclosures would have been enabling.").

Patent Owner argues that Petitioner's positions fail because Dr. Velinsky did not address in his Reply Declaration the alleged interference issues identified by Dr. Fleming. *See* PO Sur-reply 23. We do not see that as undermining Petitioner's positions here. As discussed above, as a legal matter, the interference issues raised by Patent Owner and Dr. Fleming are rooted in bodily incorporation of Bares's tracked system into KR996. Moreover, Dr. Velinsky provided sufficient testimony with the Petition to support the interchangeability of wheeled and tracked configurations for compact utility loaders. *See* Velinsky Pet. Decl. ¶¶ 157–162, *cited at* Pet. 62–65. We view that evidence and argument as sufficient to overcome

Dr. Fleming's discussion of the alleged interference issue, even without Dr. Velinsky testifying as to that discussion in his Reply Declaration.

For the reasons above, we determine, in light of the complete record, that Petitioner has shown by a preponderance of the evidence that one of ordinary skill in the art at the time of the invention would have had reason to modify KR996 based on Bares, as proposed, that the articulated reasoning is supported by rational underpinning, and that there would have been a reasonable expectation of success in the proposed modification.

b. The Limitations of Claim 9

In this ground based on KR996 and Bares, Petitioner relies on KR996 as to the "loader support" limitations in the same manner as in the ground based on KR996 alone. *See* Pet. 65 (clarifying that Bares is not relied on for the "loader support" limitations). Patent Owner relies on the same arguments discussed above (*see* § II.F.2.a) as to the "loader support" limitations. *See* PO Resp. 50. For the same reasons discussed above, we find, based on the complete record, that Petitioner has shown by a preponderance of the evidence that KR996 discloses the "loader support" limitations.

To address the remaining limitations in claim 9, Petitioner discusses why the combination of KR996 and Bares discloses each limitation. *See* Pet. 65–69; Velinsky Pet. Decl. ¶¶ 163–169. Patent Owner does not present arguments for these limitations. We find, based on the complete record, that Petitioner has demonstrated by a preponderance of the evidence that the proposed combination of KR996 and Bares discloses the remaining limitations in claim 9.

c. Objective Indicia of Nonobviousness

In this ground based on KR996 and Bares, Patent Owner relies on the same arguments discussed above (*see* § II.F.2.c) as to objective indicia of nonobviousness. *See* PO Resp. 51–68; PO Sur-reply 23–27. Petitioner relies on the same responses discussed above. *See* Pet. Reply 26–30. Thus, the analysis of objective indicia of nonobviousness for this asserted ground as the same as that discussed above as to the ground based on KR996 alone.

d. Conclusion as to Claim 9

For the reasons discussed above (§§ II.G.2.a–b), the evidence presented by Petitioner strongly indicates that claim 1 would have been obvious over the combination of KR996 and Bares. For the reasons also discussed above (§ II.F.2.c), if we were to presume nexus, we give some weight to Patent Owner's admissible evidence of industry praise and skepticism at the time of invention in favor of nonobviousness. When considering all the evidence of obviousness and nonobviousness together (*see In re Cyclobenzaprine Hydrochloride Extended-Release Capsule Patent Litig.*, 676 F.3d 1063, 1079 (Fed. Cir. 2012)), we find Petitioner's strong evidence of obviousness outweighs Patent Owner's objective indicia of nonobviousness. Thus, we conclude Petitioner has demonstrated by a preponderance of the evidence that claim 9 would have been obvious based on the combination of KR996 and Bares.

H. Asserted Obviousness of Claim 8 Based on KR996 and SAE

Petitioner asserts that claim 8 would have been obvious based on KR996 and SAE. Pet. 19, 69–73. Patent Owner does not present any arguments specifically addressing claim 8 in the context of this asserted

ground, but rather, relies on the same arguments presented as to the prior ground. *See* PO Resp. 50–51.

We determine, based on the complete record, that the combination of KR996 and SAE discloses the subject matter of claim 8. We also determine that Petitioner has adequately explained why one of ordinary skill in the art would have had reason to combine KR996 and SAE as proposed and that there would have been a reasonable expectation of success. Based on the complete record, including the objective indicia of nonobviousness, we determine that Petitioner has demonstrated by a preponderance of the evidence that claim 8 would have been obvious based on KR996 and SAE.

III. CONCLUSION

Upon consideration of the briefing and the evidence of record, we determine that Petitioner (1) has proven, by a preponderance of the evidence, that claims 1–8 and 10 are anticipated by KR996 and would have been obvious based on KR996, (2) has proven, by a preponderance of the evidence, that claim 9 would have been obvious based on KR996 and Bares, and (4) has proven, by a preponderance of the evidence, that claim 8 would have been obvious based on KR996 and SAE.[24]

---

[24] Should Patent Owner wish to pursue amendment of the challenged claims in a reissue or reexamination proceeding subsequent to the issuance of this decision, we draw Patent Owner's attention to the April 2019 Notice Regarding Options for Amendments by Patent Owner Through Reissue or Reexamination During a Pending AIA Trial Proceeding, 84 Fed. Reg. 16,654 (Apr. 22, 2019). If Patent Owner chooses to file a reissue application or a request for reexamination of the challenged patent, we remind Patent Owner of its continuing obligation to notify the Board of any such related matters in updated mandatory notices. *See* 37 C.F.R. §§ 42.8(a)(3), (b)(2).

In summary:

Claim(s)	35 U.S.C. §	Reference(s)/ Basis	Claim(s) Shown Unpatentable	Claim(s) Not Shown Unpatentable
1–8, 10	102(a)(1)	KR996	1–8, 10	
1–8, 10	103	KR996	1–8, 10	
9	103	KR996, Bares	9	
8	103	KR996, SAE	8	
Overall Outcome			1–10	

IV. ORDER

For the reasons above, it is:

ORDERED that Petitioner has proven, by a preponderance of the evidence, that claims 1–10 are unpatentable;

FURTHER ORDERED that the parties shall file, within 10 days of entry of this Decision, a joint motion to seal this Decision, and shall provide,

along with the joint motion, an exhibit with a proposed redacted public version of this Decision;

FURTHER ORDERED that Petitioner's Motion to Exclude is *granted in part*;

FURTHER ORDERED that Patent Owner's Motion to Exclude is *denied*; and

FURTHER ORDERED that, because this is a Final Written Decision, parties to the proceeding seeking judicial review of the decision must comply with the notice and service requirements of 37 C.F.R. § 90.2.

FOR PETITIONER:

David O'Dell
Kelly Gehrke Lyle
Hong Shi
Greg Michelson
John Russell Emerson
HAYNES AND BOONE LLP
david.odell.ipr@haynesboone.com
kelly.lyle.ipr@haynesboone.com
hong.shi.ipr@haynesboone.com
greg.michelson.ipr@haynesboone.com
russ.emerson.ipr@haynesboone.com

FOR PATENT OWNER:

Richard L. Brophy
Marc Vander Tuig
Michael J. Vander Molen
ARMSTRONG TEASDALE LLP
rbrophy@atllp.com
mvandertuig@atllp.com
mvandermolen@atllp.com
iplitstaff@atllp.com