US005457734A

United States Patent [19]

Eryaman et al.

[11] **Patent Number: 5,457,734**

[45] **Date of Patent: Oct. 10, 1995**

[54] **MULTI-BAND CELLULAR RADIOTELEPHONE SYSTEM ARCHITECTURE**

[75] Inventors: **Can A. Eryaman**, Frankford; **Takeo Kanai**, Bridgewater, both of N.J.

[73] Assignee: **AT&T IPM Corp.**, Coral Gables, Fla.

[21] Appl. No.: **89,314**

[22] Filed: **Jul. 8, 1993**

[51] **Int. Cl.**[6] **H04Q 7/36**

[52] **U.S. Cl.** **379/58**; 379/59; 455/22; 455/33.1; 455/34.1; 455/101

[58] **Field of Search** 370/95.3; 375/1; 379/56, 58, 59; 455/20, 21, 22, 33.1, 33.2, 54.1, 101, 102, 34.1

[56] **References Cited**

U.S. PATENT DOCUMENTS

3,626,112	12/1971	Henquet	379/58
4,001,691	1/1977	Gruenberg	455/22
4,144,496	3/1979	Cunningham et al.	379/59
4,284,848	8/1981	Frost	379/59
4,972,455	11/1990	Phillips	379/59
5,067,173	11/1991	Gordon et al.	455/33.1
5,220,680	6/1993	Lee	455/102

FOREIGN PATENT DOCUMENTS

0015341	1/1983	Japan	455/101
0224424	9/1990	Japan	455/34.1
0174827	7/1991	Japan	455/34.1
3234131	10/1991	Japan	455/34.1

OTHER PUBLICATIONS

Lee, "Mobile Cellular Telecommunications System, " 1989 pp. 5 and 6.

Primary Examiner—Curtis Kuntz

Assistant Examiner—William Cumming

Attorney, Agent, or Firm—Alfred G. Steinmetz

[57] **ABSTRACT**

A dual frequency cellular radiotelephone system, having different service providers, serving mobile subscribers at first and second distinct frequency ranges, uses frequency conversion techniques, to serve both frequency ranges with a minimum of equipment duplication. A first service group is serviced by a first system including a mobile switching center (MSC), a first transmission unit, a first base station controller (BSC), a first base transceiver, a first linear amplifier and first antenna. The entire train of components is designed to support air interface transmissions at the first frequency band at which the first group is served. A signal frequency converter, connected to a transceiver of the first frequency band, converts downlink signals from the first frequency range to the second frequency range and uplink signals from the second frequency range to the first frequency range. Signals transmitted by the second antenna are within the second band of frequencies and signals received at the second band of frequencies are converted to signals within the first band of frequencies so that they may be processed by the first radio telephone system of the first frequency band. Mobile stations are identified by the subscriber group identification register for their subscriber group enabling distinct services and distince system parameters. Information concerning each mobile station of the first and second subscriber groups is obtained from the first and second subscriber information register databases.

2 Claims, 8 Drawing Sheets

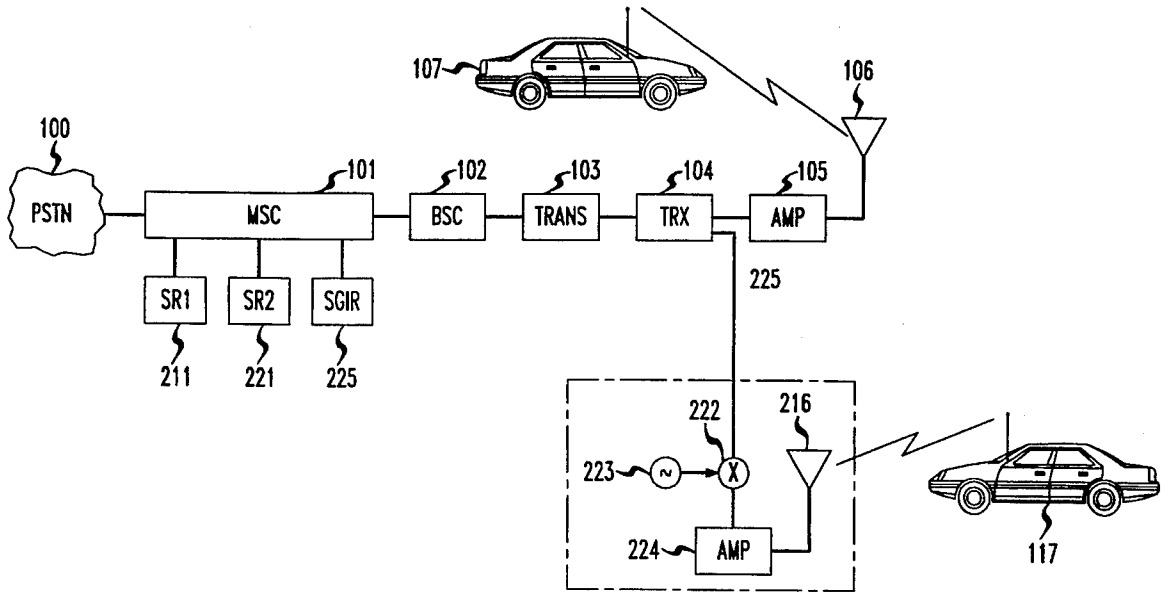

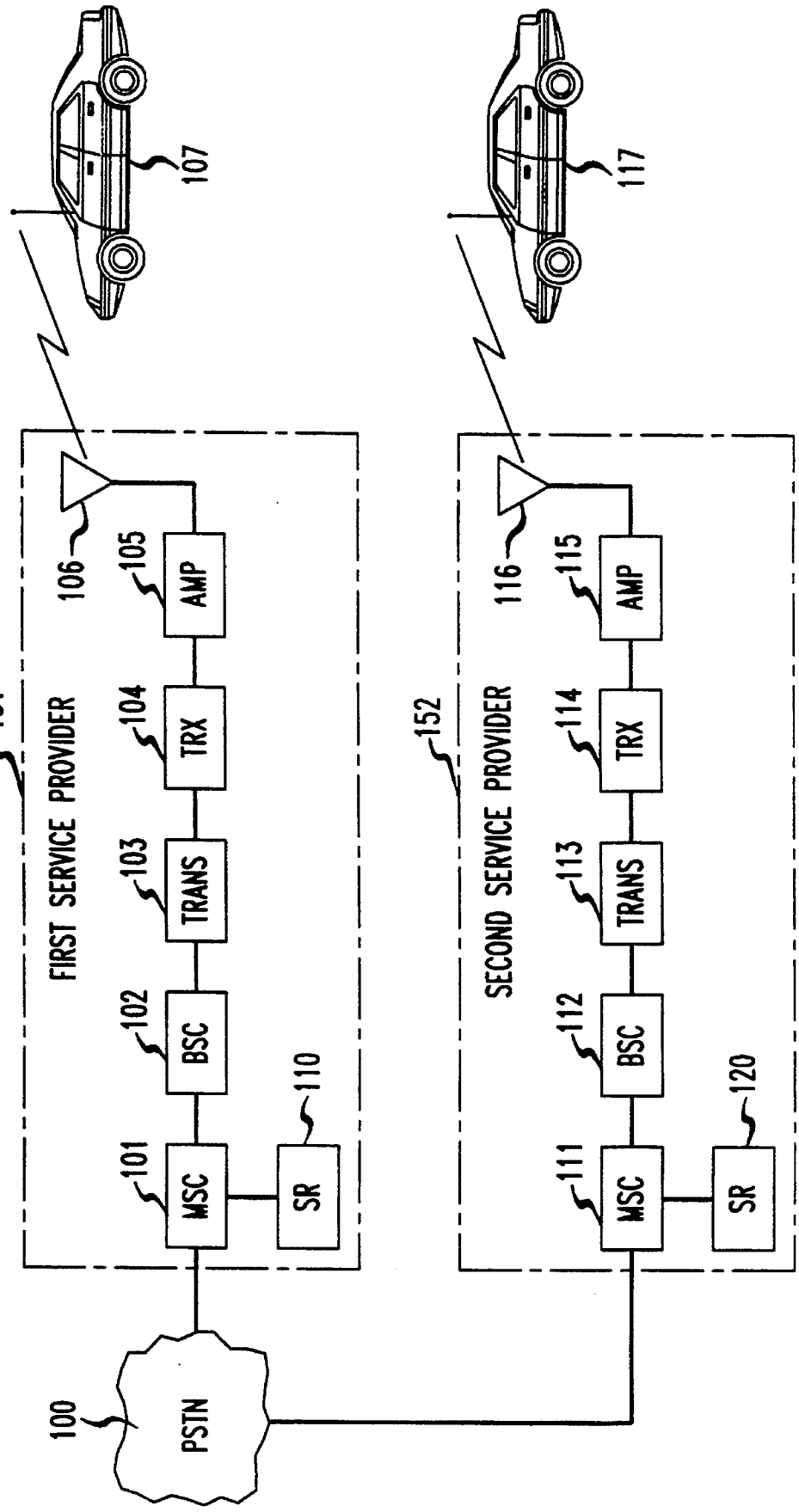

FIG. 1
(PRIOR ART)

FIG. 2

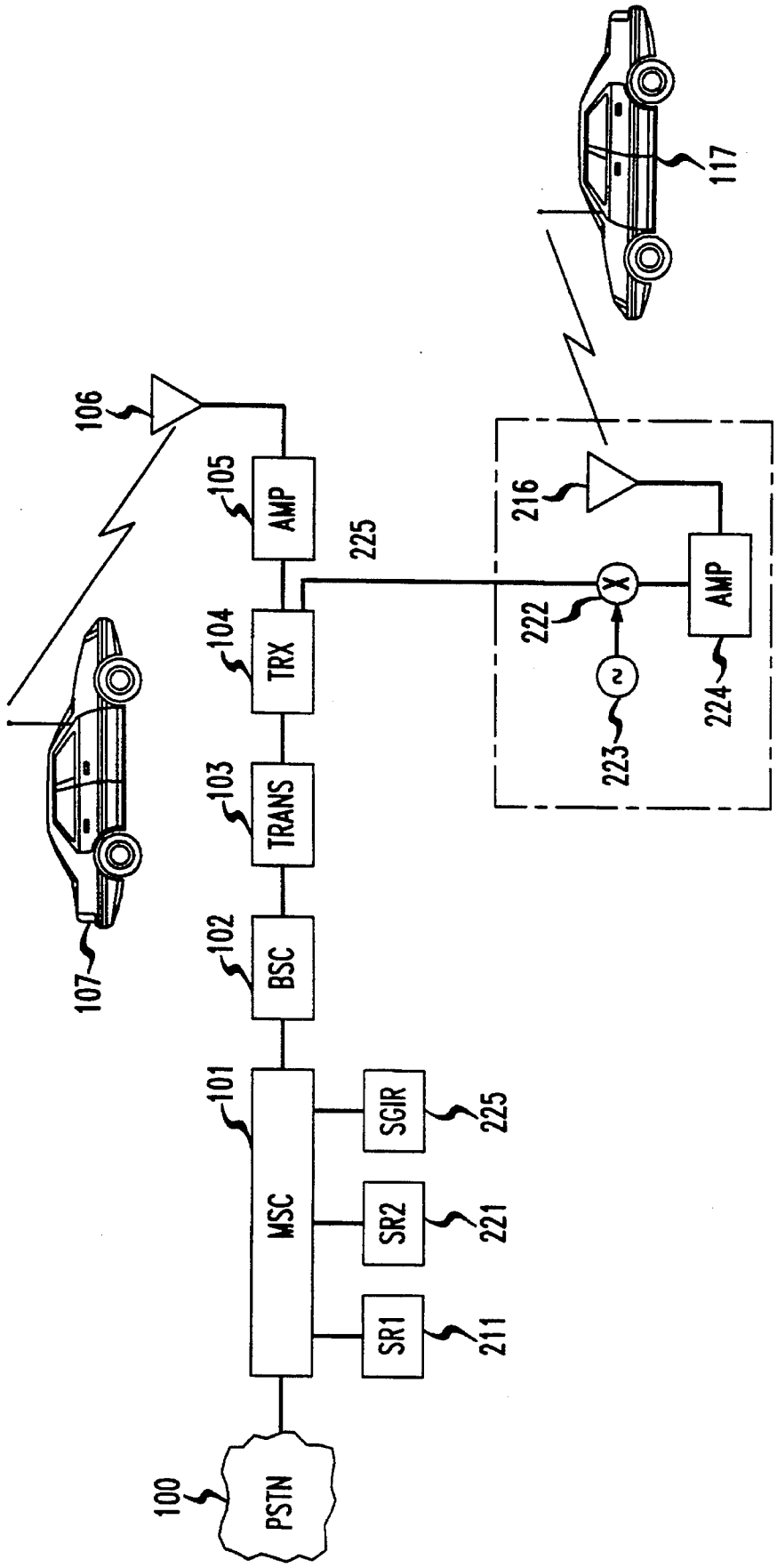
PSTN
100
MSC
101
SR1
211
SR2
221
SGIR
225
BSC
102
TRANS
103
TRX
104
AMP
105
106
107
225
AMP
224
223
222
216
117

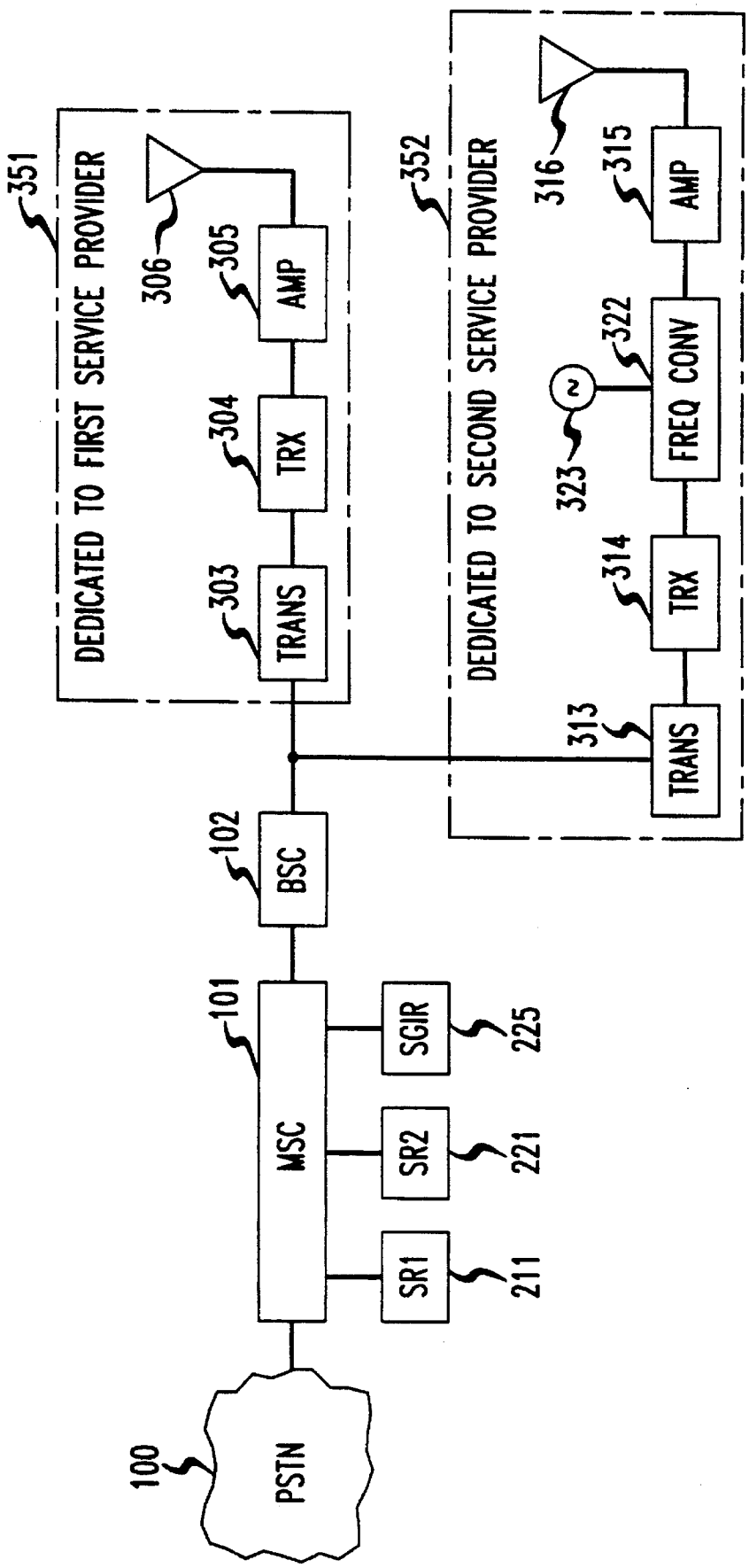
351
DEDICATED TO FIRST SERVICE PROVIDER
306
305
AMP
304
TRX
303
TRANS
352
DEDICATED TO SECOND SERVICE PROVIDER
316
315
AMP
322
FREQ CONV
323
314
TRX
313
TRANS
102
BSC
101
MSC
SGIR
225
SR2
221
SR1
211
100
PSTN

FIG. 3

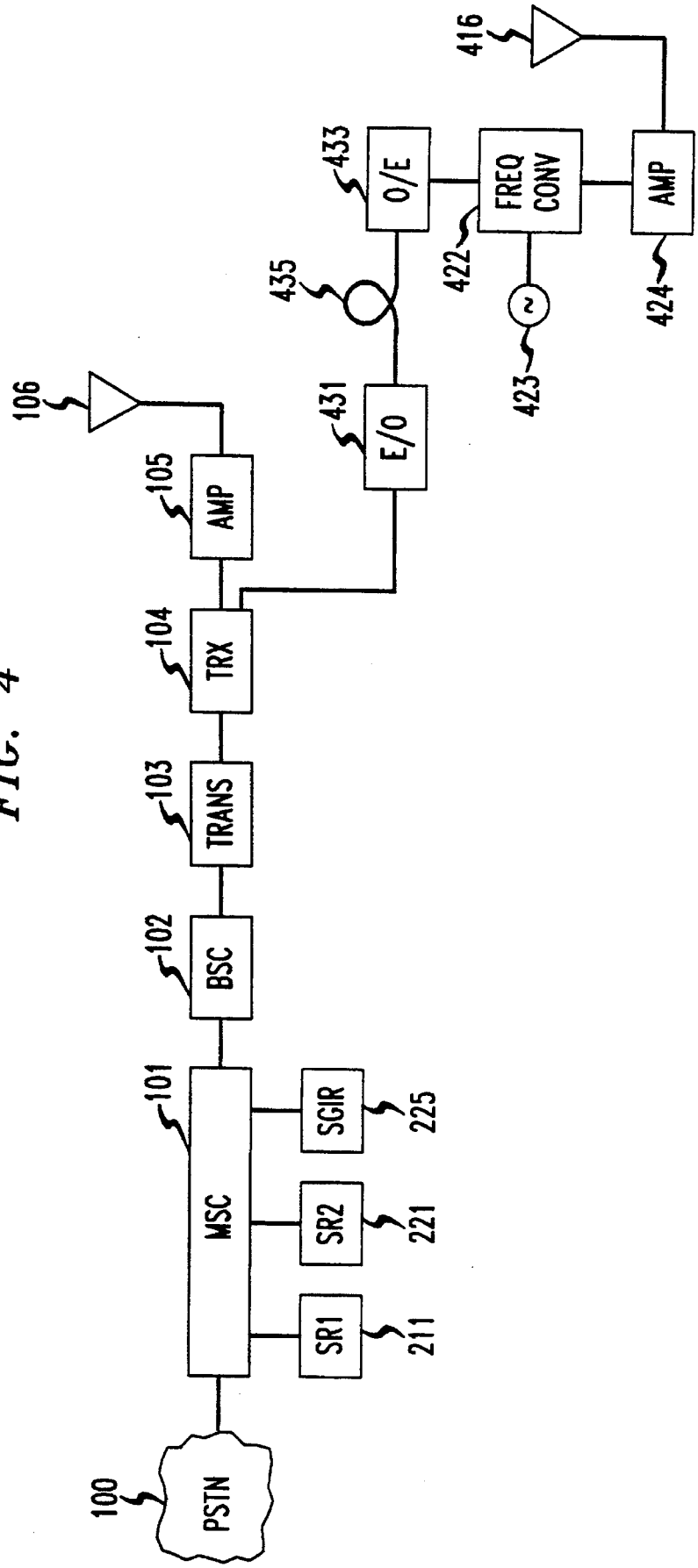
100
PSTN
101
MSC
SR1
211
SR2
221
SGIR
225
102
BSC
103
TRANS
104
TRX
105
AMP
106
431
E/O
435
433
O/E
422
FREQ CONV
423
424
AMP
416

FIG. 4

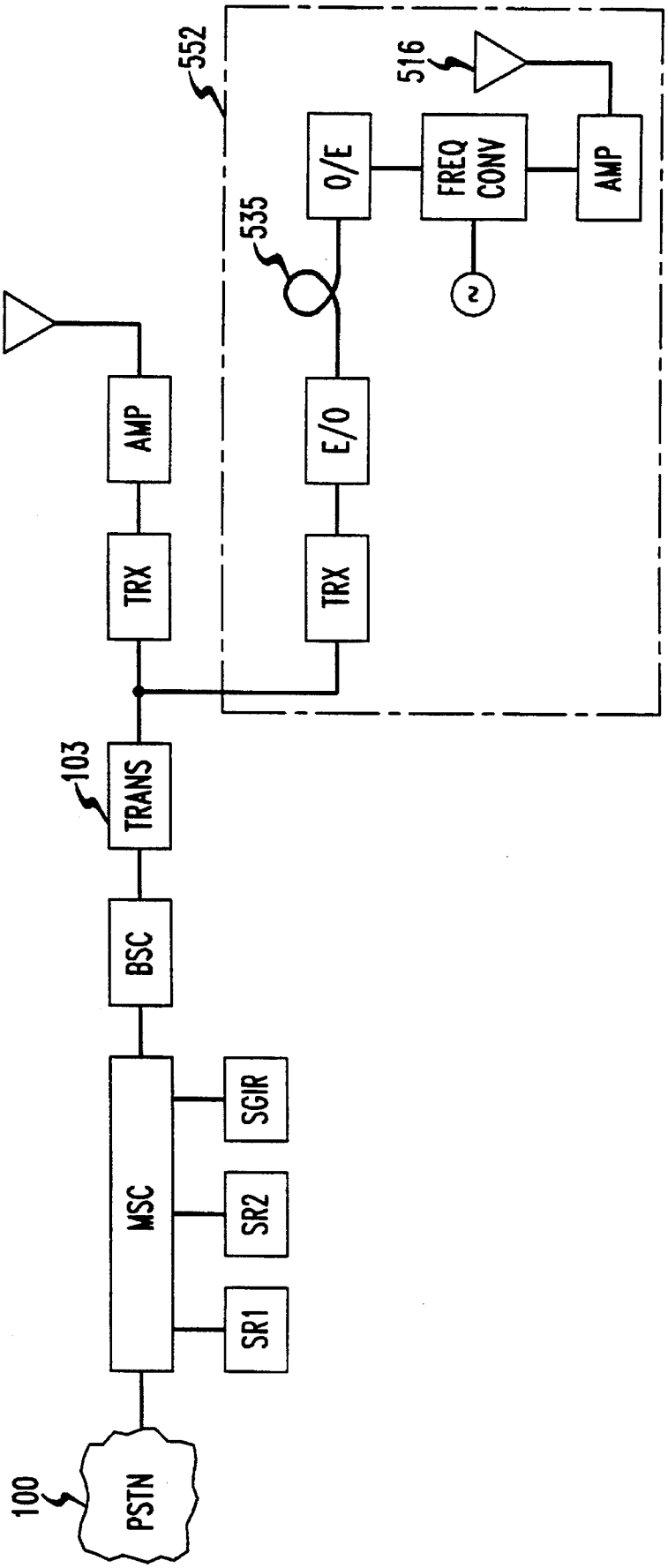
552
516
O/E
FREQ CONV
AMP
535
E/O
TRX
AMP
TRX
103
TRANS
BSC
MSC
SGIR
SR2
SR1
100
PSTN

FIG. 5

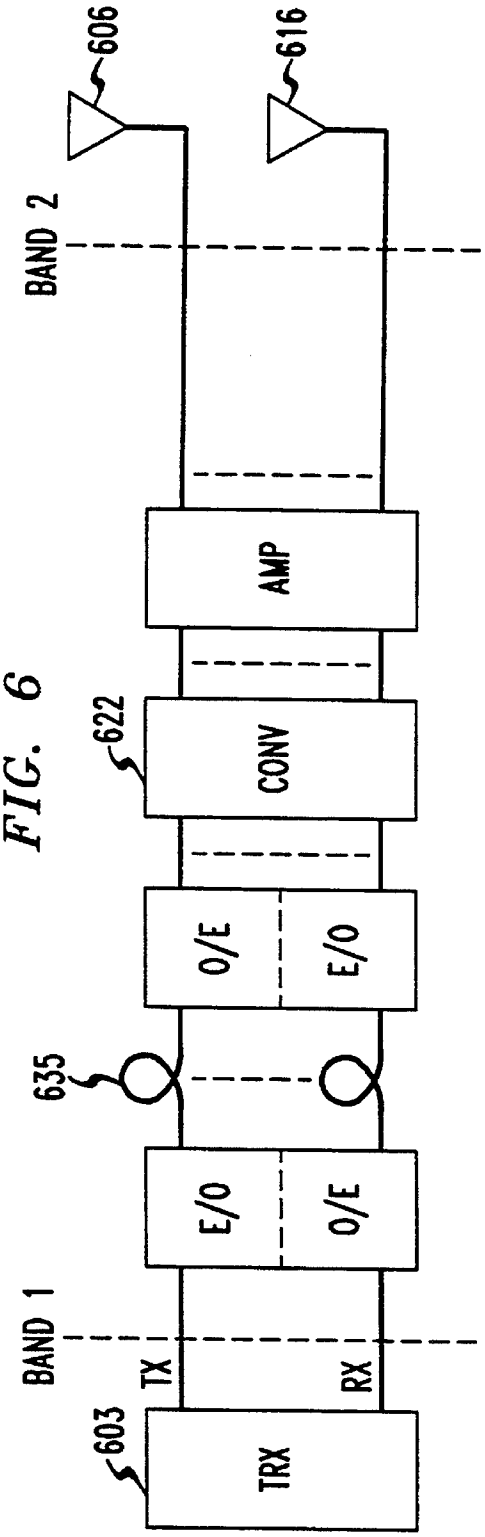
606
616
BAND 2
AMP
622
CONV
O/E
E/O
635
E/O
O/E
BAND 1
TX
RX
603
TRX

FIG. 6

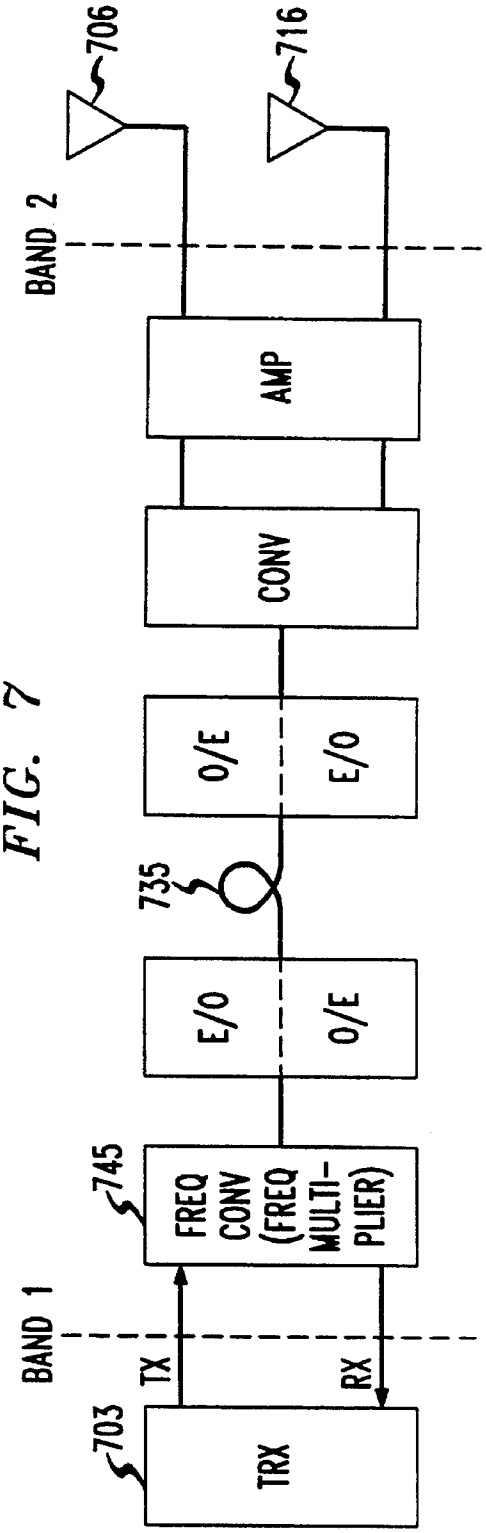
706
716
BAND 2
AMP
CONV
O/E
E/O
735
E/O
O/E
745
FREQ CONV (FREQ MULTI-PLIER)
BAND 1
TX
RX
703
TRX

FIG. 7

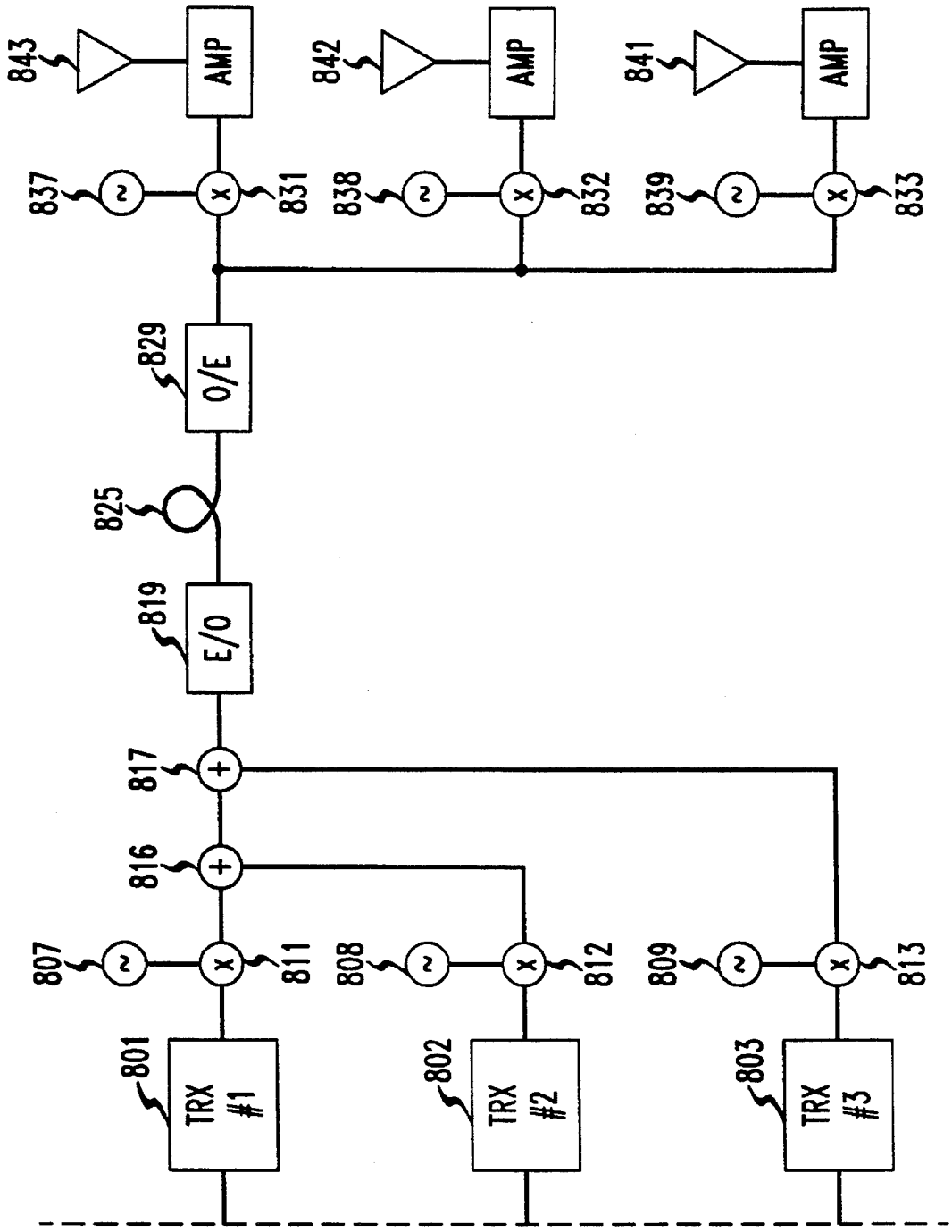
843
AMP
842
AMP
841
AMP
837
831
838
832
839
833
829
O/E
825
819
E/O
817
816
807
811
808
812
809
813
801
TRX #1
802
TRX #2
803
TRX #3

FIG. 8

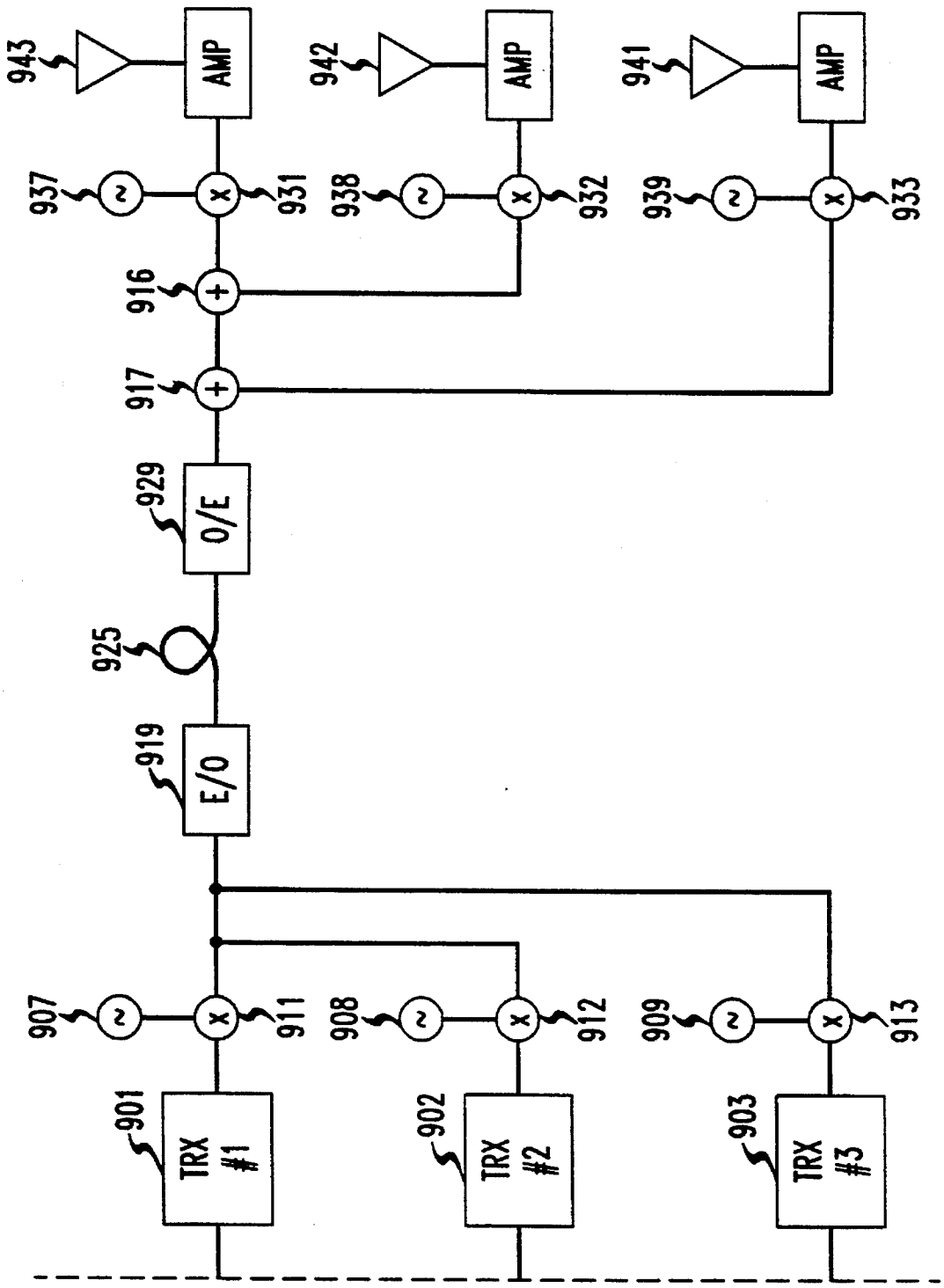
943
AMP
942
AMP
941
AMP
937
931
938
932
939
933
916
917
929
O/E
925
919
E/O
907
911
908
912
909
913
901
TRX #1
902
TRX #2
903
TRX #3

FIG. 9

MULTI-BAND CELLULAR RADIOTELEPHONE SYSTEM ARCHITECTURE

FIELD OF THE INVENTION

This invention relates to multi-band cellular radiotelephone systems in which the different bands are dedicated to different service providers.

BACKGROUND OF THE INVENTION

Radiotelephone cellular service areas are typically divided among two or more service providers. Each service provider operates within a distinct frequency band which is unique to its customers. An example is the division of serving areas into two distinct frequency bands 800 MHz and 1.5 GHz serving two distinct groups of subscribers (e.g. PDC Personal Digital Cellular, a Japanese standard). Another examples is GSM (i.e. Groupe Speciale Mobile, a European Standard). These separate groups of subscribers may be served by a commonly owned but using separate and independent equipment bases to provide service area call processing and air interface service. In most cases each group of subscribers is served by a different service provider. Such is the case in Japan where different service providers serve different subscriber groups at different frequencies as presently allowed by the controlling digital cellular standards (PDC) in Japan.

As presently contemplated, by PDC, the cellular system serving each band is constructed and designed for only one band of frequency. The provision of service in each of the two bands hence requires the provision of separate and distinct mobile switching centers, base station controllers and radio transceiver units due to the division of the serving frequencies. The different services are reflected only in frequency since they both share common call processing arrangements and protocols. This requires the duplication of equipment whose only distinct feature is to function at two widely disparate frequencies.

SUMMARY OF THE INVENTION

A dual frequency cellular radiotelephone system, with a common provider serving two different subscriber groups or having different service providers, serving mobile subscribers at first and second distinct frequency ranges, uses front end frequency conversion techniques, to serve both frequency ranges with a minimum of equipment duplication. A first service group is serviced by a first system including a mobile switching center (MSC), a first base station controller (BSC), first transmission equipment, first radio transceiver equipment, a first linear amplifier and a first antenna. This entire train of components is designed to support air interface transmission and reception at the first frequency band at which the first group is served.

In accord with one aspect of the invention a dual frequency cellular radiotelephone system serves mobile subscribers in two different subscriber groups at first and second distinct frequency ranges using a common MSC. These first and second distinct frequency ranges in the illustrative embodiment are 800 MHz and 1.5 GHz. The first group (800 MHz) is served through a serial array of transmission and radio equipment that includes a radio transceiver, amplifier and antenna operative in the 800 MHz band of frequencies. The second subscriber group is served by equipment to operate in the air interface at 1.5 GHz which is connected directly to the radio transceiver serving the 800 MHz band. The equipment dedicated to the second subscriber group (1.5 GHz) includes a frequency converter operative for converting downlink signals from the first frequency range (800 MHz) serving the first group to the second frequency range (1.5 GHz) serving the second group of subscribers. Similarly uplink signals from at the second group of frequencies (1.5 GHz) are converted to the first group of frequencies (800 MHz) and applied to the radio transceiver at that frequency.

A common MSC services both 800 MHz and 1.5 GHz bands, in the aforementioned arrangement, and has connected thereto first and second subscriber group identification registers (SGIR) providing a data base for the two distinct subscriber groups of both systems. The subscriber group identification registers can identify from the MS ID the particular service provider of that MS. Hence the cellular system of each service provider is organized in the overall system to operate as a virtual dual cellular system.

A cellular telephone system radio base station in accord with the invention may serve two distinct groups of subscribers at two different frequency ranges and at two different geographical locations. In such a system a first radio telephone cellular system (800 MHz) includes 800 MHz radio base stations (RBS), which comprises a signal transmission facility in combination with a 800 MHz radio transceiver and a first air interface (800 MHz) serves the first group of subscribers. The second group of subscribers (1.5 GHz) are served, by 1.5 GHZ RBSs, which comprise a second signal transmission facility, a 800 MHz radio transceiver and a frequency converter, connecting the 800 MHz radio transceiver to a 1.5 GHz air interface. The frequency converter provides uplink and downlink signals in the 1.5 GHz frequency range assigned to the second group of subscribers. The signal transmission facilities allow the 800 MHz and the 1.5 GHz RBSs the capability of communicating with a geographically distant MSC.

Communication between the signal transmission facilities and the common MSC may be by T1 carrier metallic cable or by optical transmission communication cable.

In another aspect of the invention a system designed to serve one particular group of subscribers may be shared with another group of subscribers with distinct virtual systems by applying frequency conversion techniques to enable the station equipment to service the other group of subscribers.

BRIEF DESCRIPTION OF THE DRAWING

In the Drawing:

FIG. **1** is a schematic of two separate cellular radiotelephone services operating at two distinct frequency bands and serving different customers within a common serving area;

FIG. **2** is a schematic of an arrangement for minimizing equipment duplication in a cellular radiotelephone system serving two different customer groups at differing frequency bands;

FIGS. **3**,**4** and **5** are schematics of further arrangements for minimizing equipment duplication in a cellular radiotelephone system serving two different customer groups at differing frequency bands;

FIGS. **6** and **7** are schematics of arrangements using optical transmission methods for multiple-band cellular service system applied to a sectorized service area; and

FIGS. **8** and **9** are detailed schematics of a transmitting and receiving system, respectively, for multi-band cellular

service system applied to a sectorized service system such as illustrated in FIG. 7.

DETAILED DESCRIPTION

A conventional cellular radiotelephone system which enables two independent service providers to provide radiotelephone service to two groups of subscribers is shown in FIG. 1. Each service provider has an independent system to supply service at a different frequency band. The first system **151** to supply radiotelephone service between mobile subscribers (MS) **107**, customers of the first service proveder **151**, and the public switched telephone network **100**. This first system is operative at a first frequency band and includes a mobile switching center **101**, a base station controller (BSC) **102**, a signal transmission facility **103**, a transceiver **104**, an amplifier **105** and an antenna **106**. A subscriber information register (SR) **110** contains the data base of mobile subscribers **107** served by this first system.

A second radiotelephone system **152** of a second service provider to service MSs **117**, subscribing to that service, includes of a mobile switching center (MSC) **111** with an associated subscriber information register (SR) **120**, that includes the data base of subscribers served by the second system, a base station controller (BSC) **112**, a transmission circuit **113**, a transceiver **114**, an amplifier **115** and an antenna **116**. The components of each system are very similar since the two systems have the same call processes and protocols. The equipment differs only in the circuitry processing signals in the frequency band that is to be serviced.

A radiotelephone system providing service, by both service providers, to MSs at both frequency bands while maximizing the use of common call processing equipment is shown in the schematic of FIG. 2. This readily enables dual band frequency simultaneous service to the MSs of both systems using coming call processing equipment with the exception of the air interface equipment. As shown both service providers may use a common mobile switching center **101**, a common base station controller (BSC) **102**, a common transmission circuit **103**, and a common transceiver **104**. A subscriber information register (SR1) **211** and (SR2) **221** is coupled to the MSC **101** to provide data base information on the MSs of both systems. Also a subscriber group identification register (SGIR) **225** is coupled to MSC **101** to provide database information on the subscriber group of the MSs. Service to the MSs **107** of the first frequency band is via the transceiver **114**, the amplifier **115** and the antenna **106** in the same manner as MS **107** is served in the system of FIG. **1**.

A frequency converter **222** is connected to the output line of the transceiver **104** or in the alternative by a coupler **225** to the output line of the transceiver **104**. A mixing signal is supplied by a local oscillator **223**. The frequency converter **222** is connected via the bidirectional amplifier **224** to the antenna **216** radiating outgoing signals and receiving incoming signals. Incoming signals from MSs **117** operating at the second frequency band are received by antenna **216** and are converted to a signal at the first frequency band by the frequency converter **222**. The signal converted to the first frequency band is coupled to the transceiver **104** by the coupler **225**. The equipment enclosed within the dotted line **231** is dedicated solely to the second frequency band range. The incoming radiotelephone signal, at the second frequency band, is converted to the first frequency band and is applied, via the coupler **225**, to transceiver **104**, to be processed at the first frequency band by the same call processing equipment used for serving the subscribers using the first frequency band. MS **117** is identified as belonging to the second subscriber group by the subscriber group identification register (SGIR) **225** and its subscriber information is obtained from the subscriber information register (SR2) **221**.

In one particular embodiment, both frequency band outputs may be used to serve a common MS. The two frequency outputs may be transmitted to MSs having the capability for accepting both frequency bands to provide frequency diversity to the MS **218** which is capable of transmitting and receiving radio telephone signals in both of the radiotelephone frequency bands.

A virtual dual system shown in FIG. **3** provides service to two groups of mobile subscribers normally serviced by two different service providers each operating within differing frequency ranges. The system for serving the first group of subscribers includes the MSC **101** connected to the PSTN **100**. The MSC **101** is connected to the BSC **102** which is in turn connected to the equipment **351** dedicated to the first subscriber group. This equipment includes a signal transmission facility **303**. This is in turn connected to the transceiver **304**. the output of the transceiver **304** is connected via amplifier **305** to antenna **306** which radiates and receives signals to and from the first subscriber group at the first frequency band.

The second subscriber group, serviced by a second service provider and operating within the second frequency band, equipment dedicated to the second service provider as designated by **352**. This equipment includes a transmission facility **313** connected to the BSC **302**. The output of the signal transmission facility **313** is connected via the transceiver **314** providing service in the first frequency band and amplifier **315** to the radiation and reception antenna **316** providing service in the second frequency band, and the frequency converter **322**.

Another arrangement for servicing the subscribers of two different service providers is shown in the FIG. **4** The PSTN **100** is connected to the MSC **101** which is in turn directly connected to the BSC **102**, the signal transmission control **104** and the amplifier **105**. This system is operated at the first frequency band and the antenna radiates radiotelephone signals to and receives radiotelephone signals from the first group of subscribers.

An auxiliary processing system for servicing the second group of subscribers is coupled to the TRX **104**. The downlink output from the TRX **104** is connected to the electrical/optical converter **431** which is coupled via a transmitting optical fiber cable to the electrical/optical converter **433**. Converter **433** is connected to the frequency converter **422** which in response to the local oscillator **423** converts signal frequencies between the first and second bands of the first and second subscriber groups. The uplink signals are received at the antenna **416** and are fed into the TRX **104** input through the reverse path.

In the arrangement shown in the FIG. **5** the system is designed to service both service providers with a minimum of equipment duplication. The two systems share a common signal transmission facility **103** and hence the two radiation and reception antennas **106** and **516** are substantially co-located. The equipment **552** dedicated to the second group of subscribers serviced by a second service provider includes a fiber optic cable **535** allowing the antenna **516** to be located remotely from the first antenna **106**.

Many cell areas are served by directional antennas with

the cell area divideed into various sectors. The system shown in the FIG. **6** shows how a transceiver **603** may be connected to antennas **606** to **616** in various sectors by separate optical fiber cables **635**, with each individual cable being dedicated to a single sector. The cables are connected to separate frequency converters included in a cabinet **622** containing the frequency converters. The frequency converters are connected through an amplifier bay to a plurality of antennas **606** to **616**, with each antenna serving a separate sector output. The TRX **603** operates at a first band of frequencies while the antennas **606** to **616** radiates at a second band of frequencies.

In the arrangement of FIG. **7** the output of the transceiver **703** is applied to a frequency multiplexer **745** and transmitted over a single optical fiber cable **735** to a frequency converter coupled the antennas **706** to **716**. This cable carries the plural signals each supplied by the frequency multiplexer **745**. The transceiver **703** operates at a first band of frequencies while antenna **706** to **716** operate at a second band of frequencies.

A cellular radiotelephone system for operating where a plurality of frequency bands defines different service sectors is shown in the FIGS. **8** and **9**. In the FIG. **8** the transmitting aspect of the base station uses three transceivers **801**,**802** and **803**, one for each sector to be radiated by the antennas **841**,**842** and **843**. Three base station radio transceivers (TRX), **801**,**802** and **803**, each providing service through optical fiber **825** to a different sector at a different frequency segment, are each connected to a mixer or frequency converter **811**, **812** and **813**, respectively. Each frequency converter is connected to a local oscillator **807**, **808** and **809** respectively. The respective frequencies are f_1 for oscillator **807**; f_2 for oscillator **808** and f_3 for oscillator **809**. The output of each frequency converter is at a frequency band. These outputs are summed in the summing circuits **815** and **817** to form a composite signal which is applied to an electrical to optical converter device **819**. The resulting optical signal is transmitted over an optical fiber cable **825** to the optical to electrical converter **829** at the remote end of the fiber cable **825**. The output of the optical to electrical converter is applied in parallel to the three frequency converters **831 832** and **833**. The local oscillators **837**, **838** and **939** apply the signal frequencies f'_1–f'_2 and f'_3 to the converters **831**,**832** and **833**. This enables the downlink signals at the output of the antennas **841 842** and **843** to serve the second frequency band originally transmitted by the transceivers **810**, **802** and **803** serving the first frequency band.

The reception arrangement is shown in the FIG. **9**. The uplink signals for each of the three sectors are received by the antennas **941**,**942** and **943**. Uplink signals received at these antennas are processed by a converter serving the second frequency band. These signals are converted in frequency to the frequencies g'_1, g'_2 and g'_3 by the frequency converters **931**,**932** and **933** in response to the local oscillator sources **937**,**938** and **939**. The frequency converter signals are combined in the combining circuits **916** and **917** and applied to the electrical to optical conversion circuit **929**. The optical signal is transmitted via the optical cable **925** to the optical to electrical converter **919** and applied to the frequency converters **911**, **912** and **913** to provide the appropriate frequency to the radio transceivers **901**,**902** and **903** serving the first frequency band.

While the invention has been describeed with reference to specific frequency ranges of a specific system arrangement it is readily apparent that many variations of this arrangement varied to serve differing systems at different frequency may be devised by those skilled in the art without departing from the spirit and scope of the invention.

The invention claimed is:

1. In a cellular radiotelephone system for serving first and second distinct groups of mobile subscribers operating at first and second distinct radiotelephone communication frequency ranges;

a communication station for providing distinct cellular radiotelephone systems for serving first and second distinct subscriber groups at the first and second distinct frequency ranges utilizing a common call processing system:

comprising

means for processing telephone signals with a mobile switching center (MSC) to interconnect a public switched telephone network to a first cellular telephone system operating within a first one of the distinct frequency ranges and serving the first distinct subscriber group;

means for serving a second cellular telephone system operating at a second frequency within the second frequency range by converting uplink signals from the second subscriber group at the second frequency to the first frequency and converting downlink signals directed to the second distinct subscriber group to the second frequency from the first frequency; and means for processing these telephone signals with the MSC;

means for providing first and second subscriber information data bases each describing attributes of mobile stations of the first and second subscriber groups, respectively; and means for providing a subscriber group identification data base for identifying the distinct subscriber groups;

means for processing calls with the first subscriber group with the first cellular telephone system in conjunction with the first subscriber information data base;

means for processing calls with the second subscriber group with the second cellular telephone system by converting the frequency of downlink signals to the second group of subscribers from the first frequency to the second frequency and uplink signals from the second group subscribers from the second frequency to the first frequency;

means for processing signals to and from the first group of subscribers in response to data in the first subscriber information data base and processing signals to and from the second group of subscribers in response to data in the second subscriber information data base.

2. In a cellular radiotelephone system for serving first and second distinct groups of mobile subscribers operating at first and second distinct radiotelephone communication frequency ranges; as claimed in claim **1**:

including:

means for transmitting and receiving signals at the first frequency range between a feed access and the frequency converter over an optical transmission facility.

* * * * *