US 20100035144A1

(19) United States

(12) Patent Application Publication

OH et al.

(10) Pub. No.: US 2010/0035144 A1

(43) Pub. Date: Feb. 11, 2010

(54) ELECTRODE ASSEMBLY AND LITHIUM SECONDARY BATTERY USING THE SAME

(75) Inventors: **Jeongwon OH**, Yongin-si (KR); **Joongheon Kim**, Yongin-si (KR)

Correspondence Address:
STEIN MCEWEN, LLP
1400 EYE STREET, NW, SUITE 300
WASHINGTON, DC 20005 (US)

(73) Assignee: **Samsung SDI Co., Ltd.**, Suwon-si (KR)

(21) Appl. No.: **12/487,966**

(22) Filed: **Jun. 19, 2009**

(30) **Foreign Application Priority Data**

Jun. 23, 2008 (KR) 2008-59128

Publication Classification

(51) **Int. Cl.**

H01M 10/02	(2006.01)
H01M 4/02	(2006.01)
H01M 2/02	(2006.01)

(52) **U.S. Cl.** **429/164**; 429/211; 429/163

(57) **ABSTRACT**

An electrode assembly and a lithium secondary battery including the same. Heat generation of the electrode tabs is reduced by providing the electrode tabs at the outermost parts of the electrode assembly. An insulation member is attached at the boundary of the electrode tabs and the respective electrode plates. An insulation member is also attached to the uncoated portions formed on the outer circumference of the electrode assembly, thereby preventing internal short circuits either between an uncoated portion and an active material layer or between the uncoated portions. The electrode assembly can be used in pouch, rectangular and cylindrical lithium secondary batteries to prevent an internal short circuit within the batteries.

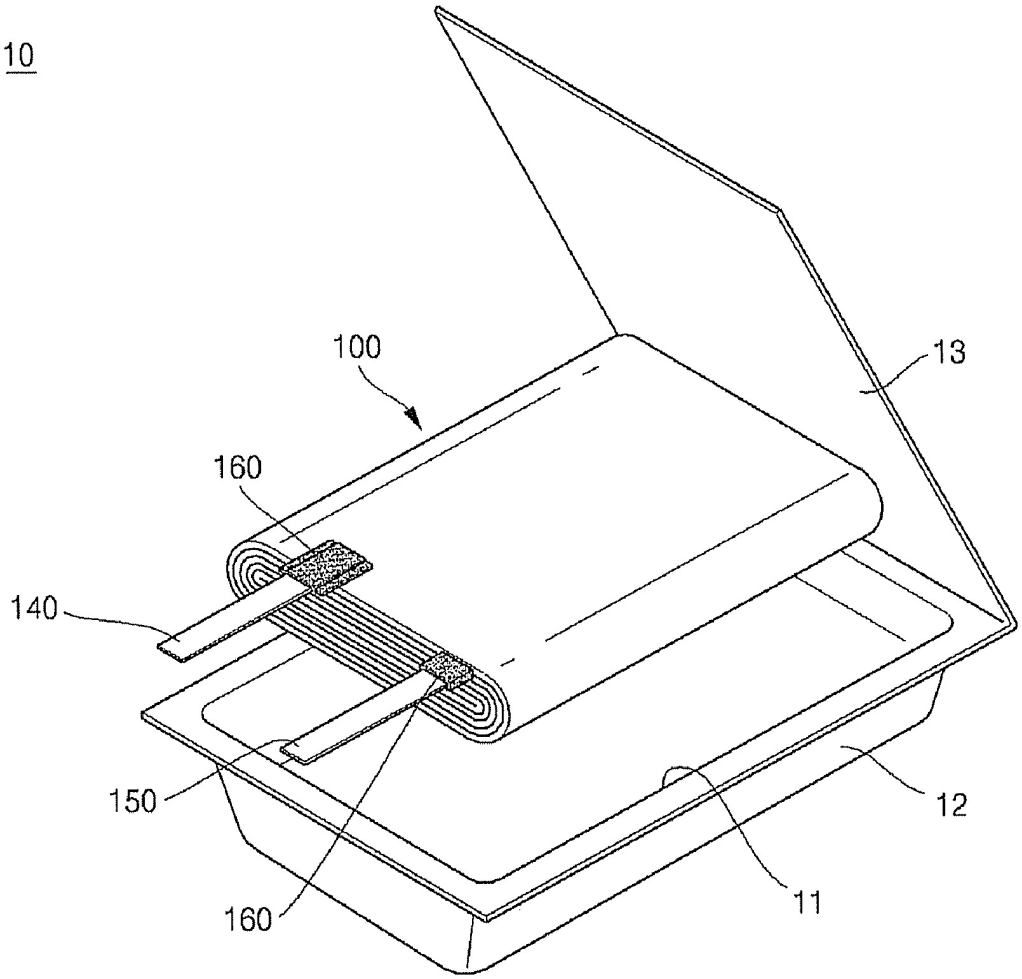

Zhuhai CosMX Battery Co. - EX1017
Zhuhai CosMX Battery Co. v. Ningde Amperex Tech. Ltd.

FIG. 1

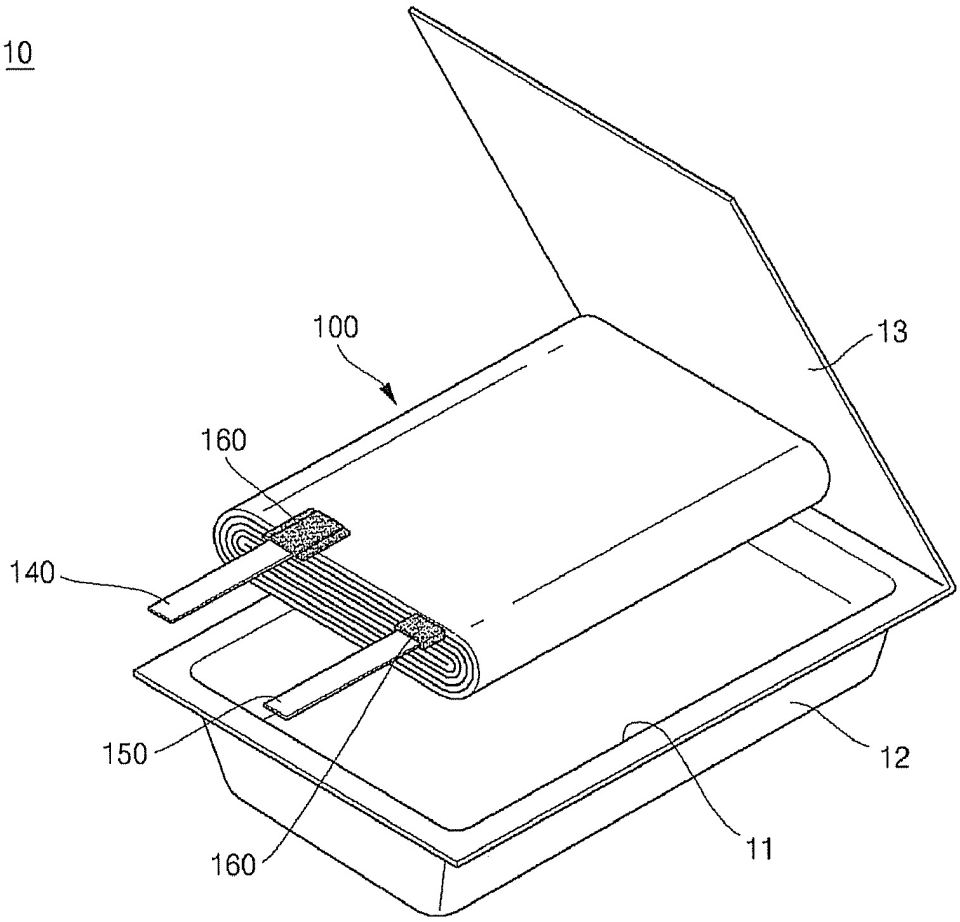

FIG. 2

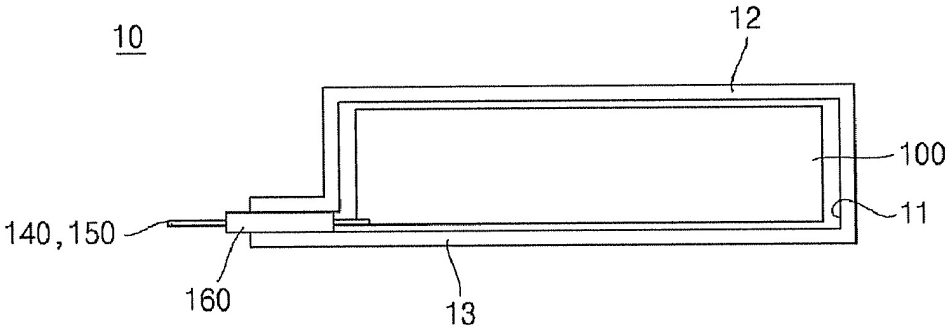

FIG. 3

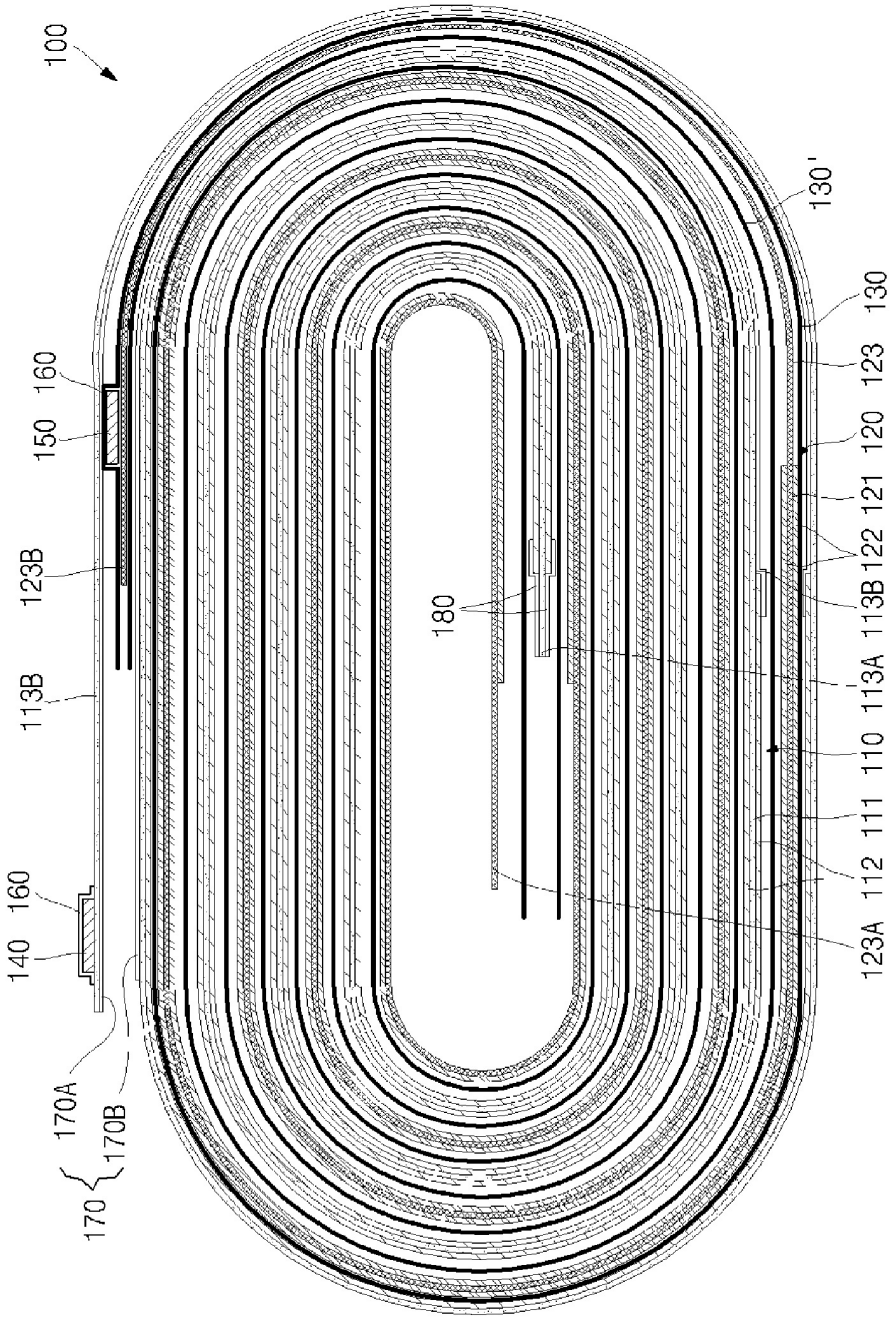
100
160
150
123B
113B
160
140
170A
170B
170
180
130'
130
123
120
121
122
113B
113A
110
111
112
123A

FIG. 4

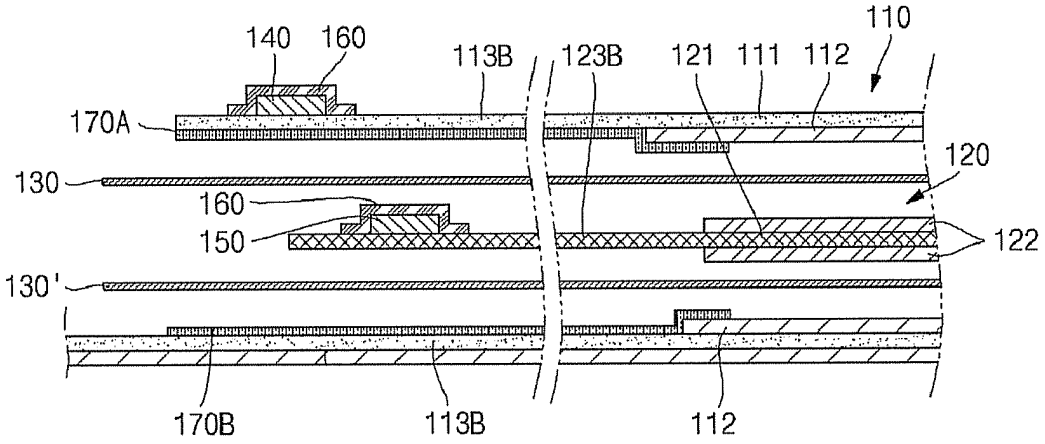
110
140
160
113B
123B
121
111
112
170A
120
130
160
150
122
130'
170B
113B
112

ELECTRODE ASSEMBLY AND LITHIUM SECONDARY BATTERY USING THE SAME

CROSS-REFERENCE TO RELATED APPLICATION

[0001] This application claims the benefit of Korean Application No. 2008-59128, filed on Jun. 23, 2008 in the Korean Intellectual Property Office, the disclosure of which is incorporated herein by reference.

BACKGROUND OF THE INVENTION

[0002] 1. Field of the Invention

[0003] Aspects of the present invention relate to a secondary battery, and more particularly, to an electrode assembly and a lithium secondary battery using the same.

[0004] 2. Description of the Related Art

[0005] Generally, a secondary battery is a battery that can be repeatedly charged and discharged, differently from a disposable battery that is not rechargeable. Secondary batteries have been widely used for advanced electronic devices such as cellular phones, notebook computers and camcorders.

[0006] In particular, lithium secondary batteries are developing rapidly because they have an operating voltage of 3.6 V that is three times more than a nickel-cadmium battery or a nickel-hydrogen battery, and they have high energy density per unit weight. Lithium secondary batteries use lithium group oxides as a cathode active material, and carbon materials as an anode active material. Depending on the kind of electrolyte, lithium secondary batteries are divided into liquid electrolyte batteries and polymer electrolyte batteries. Batteries using liquid electrolyte are called lithium ion batteries and batteries using a polymer electrolyte are called lithium polymer batteries. In addition, lithium secondary batteries are classified according to the shape of their cases into cylindrical, angular and pouch types.

[0007] An electrode assembly is provided inside the case of a lithium secondary battery. The electrode assembly is formed by interposing a separator between cathode and anode plates and winding all three together. The cathode and anode plates are formed of a collector and an active material layer coated on at least one surface of the collector. Both ends of the collector include uncoated portions where the active material layer is not formed. Usually, electrode tabs are provided at the uncoated portions.

[0008] Usually, at the portions of the battery where the electrode tabs are welded to the electrode plates, metals of different composition are electrically coupled to each other, that is, the metals of the electrode plates and the metals of the electrode tabs. Accordingly, the internal resistance (IR) of those portions increases and significant heat is generated. Therefore, protective tapes are attached to protect the portions where the electrode plates and electrode tabs are electrically coupled to each other.

[0009] In addition, insulation tape is attached to the boundaries between the electrode tab installation portions, the active material layers and the uncoated portions. The insulation tape attached to the boundaries between the active material layers and uncoated portions prevents short circuits that could be caused by contact between the electrode plates or the tab for one electrode plate and the other electrode plate.

[0010] However, the protective tape or insulation tape is attached only to a partial region of an electrode plate. Meanwhile, the separator insulating the electrode plates from each other contracts from the internal heat generated by a nearby electrode tab. Thus, the uncoated portion of the one electrode plate without the insulation tape and the active material layer of the other electrode plate become electrically coupled to each other, thereby causing an internal short circuit of the battery. In addition, the internal short circuit of the battery may occur by contact between the uncoated portions of the two electrode plates. The internal short circuit may cause accidents such as fire or explosion of the battery thus adversely affecting the reliability of the battery.

SUMMARY OF THE INVENTION

[0011] An aspect of the present invention provides an electrode assembly and a lithium secondary battery using the same that can prevent an electrode tab from becoming overheated or burning because of overcharge/overdischarge. Another aspect of the present invention provides an electrode assembly and a lithium secondary battery using the same that can prevent an internal short circuit that could be caused by contact between an uncoated portion of an electrode plate and the active material layer of the other electrode plate when the separator between them is compressed. Still another aspect of the present invention provides an electrode assembly and a lithium secondary battery using the same that can prevent an internal short circuit that could be caused by contact between uncoated portions of electrode plates when the separator between them is compressed

[0012] In more detail, one aspect of the present invention provides an electrode assembly that includes: a first electrode plate having uncoated portions on both ends of a collector that are not coated with active material; a second electrode plate having uncoated portions on both ends of a collector that are not coated with active material; a separator interposed between the first and second electrode plates; a first electrode tab provided at the outermost part of the first electrode plate; and a second electrode tab provided at the outermost part of the second electrode plate. The first and second electrode tabs may be respectively provided at rear uncoated portions of the first and second electrode plates that are arranged at the outermost parts of the electrode assembly when the electrode assembly is wound.

[0013] An insulation member may be attached to at least one surface of the rear uncoated portion at the outermost part of the first electrode plate. That is, the insulation member may be attached to an inner surface of the rear uncoated portion of the first electrode plate that faces an outer surface of the rear uncoated portion of the second electrode plate. The insulation member may instead be attached to an outer surface of the rear uncoated portion of the first electrode plate that faces an inner surface of the rear uncoated portion of the second electrode plate.

[0014] The insulation member may also be attached to at least one surface of the front uncoated portion of the first electrode plate. The insulation member may also be attached to both surfaces of the front uncoated portion of the first electrode plate.

[0015] The insulation member may be an insulation tape. The insulation member may be a laminating tape attached to a boundary portion between the active material layer and uncoated portion of the electrode tab.

[0016] The first electrode plate may be a cathode plate. The second electrode plate may be an anode plate.

[0017] Another aspect of the present invention provides a lithium secondary battery comprising the above electrode assembly.

[0018] Additional aspects and/or advantages of the invention will be set forth in part in the description which follows and, in part, will be obvious from the description, or may be learned by practice of the invention.

BRIEF DESCRIPTION OF THE DRAWINGS

[0019] These and/or other aspects and advantages of the invention will become apparent and more readily appreciated from the following description of the embodiments, taken in conjunction with the accompanying drawings, of which:

[0020] FIG. **1** is an exploded perspective view illustrating a pouch type lithium secondary battery using an electrode assembly according to an example embodiment of the present invention;

[0021] FIG. **2** is a sectional view illustrating the state of the lithium secondary battery of FIG. **1**;

[0022] FIG. **3** is a cross sectional view illustrating an electrode assembly; and

[0023] FIG. **4** is a schematic view illustrating the attachment of a laminating tape insulation member to the electrode assembly of FIG. **3**.

DETAILED DESCRIPTION OF THE EMBODIMENTS

[0024] Reference will now be made in detail to the present embodiments of the present invention, examples of which are illustrated in the accompanying drawings, wherein like reference numerals refer to like elements throughout. The embodiments are described below in order to explain the present invention by referring to the figures.

[0025] Referring at first to FIGS. **3** and **4**, an electrode assembly **100** according to an example embodiment of the present invention includes a cathode plate **110**, an anode plate **120** and a separator **130**. The electrode assembly **100** is formed by interposing the separator **130** between the cathode plate **110** and anode plate **120** and winding the three together in jelly-roll fashion.

[0026] The cathode plate **110** includes a cathode collector **111** made of thin aluminum foil and a cathode active material layer **112** containing lithium oxide as a main component coated on both surfaces of the cathode collector **111**. In addition, uncoated cathode portions **113** are respectively formed on both ends of the cathode collector **111**, where the uncoated cathode portions **113** refer to regions where the cathode active material layer **112** is not coated on the cathode collector **111**. Now, referring to FIGS. **1** and **2** as well, a cathode tab **140** is fixed to an uncoated cathode portion **113** by ultra-sonic welding and an end of the cathode tab **140** is fixed on the upper face or end of the wound cathode collector **111** in such a way as to project outward from the electrode assembly **100** and the cathode collector **111**. The cathode tab **140** is usually made of nickel, a nickel alloy or other metals.

[0027] The anode plate **120** includes an anode collector **121** made of thin copper (Cu) foil and an anode active material layer **122** containing carbon material as a main component coated on both surfaces of the anode collector **121**. In addition, uncoated anode portions **123** are also formed respectively on both ends of the anode collector **121**, where the uncoated anode portions refer to regions where the anode active material layer **122** is not coated on the anode collector **121**. An anode tab **150** is fixed to the uncoated anode portion **123** by ultra-sonic welding and an end of the anode tab **150** is fixed on the upper face or end of the wound anode collector **121** in such a way as to project outward from the electrode assembly **100** and the anode collector **121**. The anode tab **150** is usually made of nickel, nickel alloy or other metals.

[0028] The separator **130** is interposed between the cathode plate **120** and anode plate **130** to prevent a short circuit between the plates. The separator **130** is made of polyethylene, polypropylene, or composite film thereof, but the material is not limited thereto. The separator **130** is wider than the cathode and anode plates **110** and **120**. Thus, the separator **130** projects out beyond the cathode and anode plates, **110** and **120**, respectively.

[0029] In addition, the electrode assembly **100** uses an insulation tape as an insulation member. A protective tape **160** or laminating tape **170** or **180** is used as the insulation tape. The insulation tape may be made of any material if it is an insulating material having a high stability to electrolytes or lithium ions. In particular, the insulation tape may be made of any one resin selected from a group of fluorinated resins such as polytetrafluoroethylene (PTFE), tetrafluoroethylene-hexafluoroethylene copolymer (FEP), tetrafluoroethylene-ethylene copolymer (ETFE), tetrafluoroethylene-perfluoroalkylvinylether copolymer (PFA), or polyvinylidene fluoride (PVDF); polyimide, liquid crystal polymer (LCP), polyphenylene sulfide (PPS), polybutylene terephthalate (PBT), polyethylene terephthalate (PET), polyethylene (PE), polypropylene (PP), polyvinyl chloride (PVC) and poly-acetate resin.

[0030] The protective tape **160** is attached to surround the outer surfaces of the areas where the cathode and anode electrode tabs **140** and **150** are welded to the cathode and anode electrode plates **110** and **120**. Accordingly, the protective tape **160** prevents the separator **130** from being damaged by the cathode and anode electrode tabs **140** and **150** that project from the cathode and anode electrode plates **110** and **120**.

[0031] The laminating tapes **170** and **180** are attached to the starting and ending portions of the cathode and anode active material layers **112** and **122** and the laminating tapes **170** and **180** are formed on both surfaces of the cathode and anode collectors **111** and **121** that are the underlying materials. Accordingly, the laminating tapes **170** and **180** prevent the separator **130** from being damaged at the starting and ending portions of the cathode and anode active material layers **112** and **122** where the separator **130** projects beyond the uncoated cathode and anode portions **113** and **123** when the cathode and anode active material layers **112** and **122** are coated.

[0032] In the electrode assembly **100**, uncoated cathode and anode portions **113** and **123** are formed at both ends of the cathode and anode plates **110** and **120** when the cathode plate **110**, separator **130** and anode plate **120** are wound together in the jelly-roll fashion. In the uncoated cathode and anode portions **113** and **123**, the uncoated portions at the winding start position are referred to as "front uncoated cathode or anode portions **113**A or **123**A" and the uncoated portions at the winding end position are referred to as "rear uncoated cathode or anode portions **113**B or **123**B".

[0033] For convenience, the portions provided with the fronts of the cathode and anode plates **110** and **120** are also defined as inner circumference parts of the electrode assembly, and the portions provided with the rears of the cathode

and anode plates **110** and **120** are also defined as outer circumference parts of the electrode assembly. The cathode and anode tabs **140** and **150** are provided at the outer circumference part of the electrode assembly **100**. The cathode tab **140** is welded to the rear cathode uncoated portion **113**B and the protective tape **160** is attached to the cathode tab **140**. The anode tab **150** is welded to the rear anode uncoated portion **123**B and the protective tape **160** is attached to the anode tab **150**.

[0034] In addition, an insulation member is attached to the inner surface of the rear cathode uncoated portion **113**B of the cathode plate **110**. The insulation member is a laminating tape **170**A that is attached to the boundary between the cathode active material layer **112** and the rear cathode uncoated portion **113**B. The laminating tape **170**A extends to the end of the rear cathode uncoated portion **113**B. Accordingly, the laminating tape **170**A of the cathode plate **110** corresponds to the outer surface of the rear anode uncoated portion **123**B of the anode plate **120** with the separator **130** interposed between them.

[0035] In addition, an insulation member is attached to the outer surface of the cathode plate **110** corresponding to the inner surface of the rear anode uncoated portion **123**B of the anode plate **120**. The insulation member is a laminating tape **170**B that is attached to the boundary of the rear cathode uncoated portion **113**B of the cathode plate **110**. The laminating tape **170**B extends to the end of the rear cathode uncoated portion **113**B. Accordingly, the laminating tape **170**B corresponds to the inner surface of the rear anode uncoated portion **123**B of the anode plate **120** with the separator **130'** interposed between them at the rear cathode uncoated portion **113**B of the cathode plate **110**.

[0036] In the cathode and anode plates **110** and **120** or cathode and anode uncoated portions **113**B and **123**B, the "outer surface" refers to a surface facing the outside of the electrode assembly, and the "inner surface" refers to a surface facing the inside of the electrode assembly. On the other hand, the laminating tape **180** may be further attached to both surfaces of the front cathode uncoated portion **113**A of the cathode plate **110** in the inner circumference part of the electrode assembly **100**. The laminating tape **180** prevents contact between the anode active material layer **122** and front anode uncoated portion **123**A of the anode plate **120**.

[0037] Operation of the electrode assembly having the above construction will be explained below. The cathode and anode tabs **140** and **150** are provided at the outer circumference of the electrode assembly **100**. In other words, the cathode tab **140** is ultrasonically welded to the outermost part of the cathode plate **110** and then the protective tape **160** is attached thereto and the anode tab **150** is ultrasonically welded to the outermost part of the anode plate **120** and then the protection tape **160** is attached thereto. The cathode and anode tabs **140** and **150** are located at the outermost part of the electrode assembly **100** and thus less heat is concentrated at the cathode and anode tabs **140** and **150** during charge or discharge. Thus, an internal short circuit between the cathode and anode plates **110** and **120** that could be caused by heat of the cathode and anode tabs **140** and **150** can be prevented. As described above, heat radiation performance of the cathode and anode tabs **140** and **150** located at the outermost part of the electrode assembly **100** is improved compared to the situation where the electrode tab is located on the inner circumference of the electrode assembly **100**.

[0038] In addition, the laminating tape **170**A is extended and attached to the end of the rear cathode uncoated portion **113**B of the cathode plate **110** on the inner surface of the rear cathode uncoated portion **113**B of the cathode plate **110**. Accordingly, the laminating tape **170**A of the cathode plate **110** corresponds to the outer surface of the rear anode uncoated portion **123**B of the anode plate **120** with the separator **130** interposed between them. Therefore, a short circuit that could be caused by contact between the rear cathode uncoated portion **113**B of the cathode plate **110** and rear anode uncoated portion **123**B of the anode does not occur even if the separator **130** interposed between the cathode and anode plates **110** and **120** is damaged or contracts. Further, a short circuit that could be caused by contact between the rear cathode uncoated portion **113**B of the cathode plate **110** and the anode active material layer **122** of the anode plate does not occur. In particular, it is possible to prevent fatal damage to the battery that otherwise could be caused by contact between the cathode uncoated portion **113**B of the cathode plate **110** and the anode active material layer **122** of the anode plate **120**.

[0039] In addition, the laminating tape **170**B is attached to the outer surface of the rear cathode uncoated portion **113**B of the cathode plate **110** with the separator **130'** interposed between them while the laminating tape **170**B corresponds to the inner surface of the rear anode uncoated portion **123**B of the anode plate **120**. Accordingly, a short circuit that could be caused by contact between the rear anode uncoated portion **123**B of the anode plate **120** and rear cathode uncoated portion **113**B of the cathode plate **110** does not occur even if the separator **130'** interposed between the cathode and anode plates **110** and **120** is damaged or contracts. Further, a short circuit that could be caused by contact between the rear anode uncoated portion **123**B of the anode plate **120** and the cathode active material layer **112** of the cathode plate **110** does not occur. In particular, it is possible to prevent an internal short circuit that could be caused by contact between the rear anode uncoated portion **123**B of the anode plate **120** and the cathode active material layer **112** of the cathode plate **110**. As described above, in the electrode assembly **100**, the cathode and anode tabs **140** and **150** of the cathode and anode plates **110** and **120** are located at the outermost part of the electrode assembly **100**, thereby minimizing internal short circuits that could be caused by heat generation at the electrode tabs.

[0040] In addition, when the separator **130** or **130'** is damaged or contracts, the rear anode uncoated portion **123**B of the anode plate **120** is insulated from the rear cathode uncoated portion **113**B or cathode active material layer **112** of the cathode plate **110**, thereby preventing an internal short circuit within the battery. Thus, a short circuit that could occur at the outer circumference of the electrode assembly **100** can be completely prevented. In addition, both surfaces of the front cathode uncoated portion **113**A of the cathode plate **110** are insulated by the laminating tape **180**. Accordingly, a short circuit that could occur between the front cathode uncoated portion **113**A and front anode uncoated portion **123**A or anode active material layer **122** can also be prevented.

[0041] The insulation members **160**, **170** and **180** of the electrode assembly **100** prevent a short circuit that could occur between the cathode and anode tabs **140** and **150**, and completely prevent both a short circuit that could occur between the cathode non-coating portions **113**A or **113**B of the cathode plate **110** and anode active material layer **122** of the anode plate **120** and a short circuit that could occur between anode uncoated portions **123**A and **123**B of the

anode plate **120** and cathode active material layer **112** of the cathode plate **110**. In addition, the electrode assembly **100** prevents both a short circuit between a pouch (reference number **10**, below) and the cathode and anode tabs **140** and **150** as well as a short circuit between the uncoated portion and active material layer of the electrode plate when the electrode assembly **100** is received in the pouch and sealed.

[0042] A pouch type lithium secondary battery using the above electrode assembly **100** will be explained below. FIGS. **1** and **2** show the above electrode assembly **100** and the pouch type lithium secondary battery **10** that in operation contains an electrolyte (the electrolyte is not described herein). The pouch type lithium secondary battery **10** includes a first case **12** having inner space **11** for seating the electrode assembly **100** therein and a second case **13** for sealing the first case **12**.

[0043] The first and second cases **12** and **13** of the pouch type lithium secondary battery **10** have a structure (not shown) in which, in order, an insulation layer, a metal layer and a protective layer are stacked. The insulation layer is the innermost layer and has insulating and thermal adhesive properties. The metal layer prevents permeation of water and loss of electrolyte. The protective layer is the outermost layer and protects the body of the battery. However, the specific material and shape of the pouch are not limited to those discussed or shown.

[0044] The electrode assembly **100** having the above structure is received in the inner space **11** of the case **12**. At this point, the cathode and anode tabs **140** and **150** of the electrode assembly **100** are drawn out of the first and second cases **12** and **13** that are subsequently sealed to each other. Electrolyte is injected after the electrode assembly **100** is received in the first case **12**. Then, the first and second cases **12** and **13** are sealed by applying predetermined heat and pressure to the sealing surface along the periphery of the inner space **11**, thereby completing the pouch type lithium secondary battery **10**.

[0045] The pouch type lithium secondary battery **10** of this embodiment has the same advantages as the above described effects of the electrode assembly **100** of reducing heat generation at the cathode and anode tabs **140** and **150** and preventing a short circuit between the uncoated portion of one electrode plate and the active material layer of the other electrode plate or between uncoated portions of the electrode plates. In the above embodiments, the electrode assembly **100** is described for a pouch type lithium secondary battery **10**, but is not limited thereto. The electrode assembly **100** can be also used in a rectangular or cylindrical lithium secondary battery.

[0046] As described above, the electrode assembly and lithium secondary battery comprising the same according to these aspects of the present invention produce the following effects. First, heat radiation performance is improved by providing the electrode tabs at the outermost parts of the electrode assembly, thereby preventing the electrode tabs from becoming overheated or burning because of overcharge/overdischarge. Second, the insulation member that is attached to the uncoated portion of the electrode plate that is wound at the outermost part of the electrode assembly prevents internal short circuits caused by contact between the uncoated portion of one electrode plate and the active material layer of the other electrode plate when the separator is compressed. Third, the insulation member that is attached to the uncoated portion of the electrode plate that is wound at the outermost part of the electrode assembly prevents internal short circuits that could be caused by contact between uncoated portions of the electrode plates when the separator is compressed.

[0047] Although a few embodiments of the present invention have been shown and described, it would be appreciated by those skilled in the art that changes may be made in this embodiment without departing from the principles and spirit of the invention, the scope of which is defined in the claims and their equivalents.

What is claimed is:

1. An electrode assembly, comprising:

a first electrode plate having uncoated portions on both ends of a collector where the collector is not coated with active material;

a second electrode plate having uncoated portions on both ends of a collector where the collector is not coated with active material;

a separator interposed between the first and second electrode plates;

a first electrode tab provided at the outermost part of the first electrode plate; and

a second electrode tab provided at the outermost part of the second electrode plate.

2. The electrode assembly of claim **1**, wherein the first and second electrode tabs are respectively provided at rear uncoated portions of the first and second electrode plates that are arranged at the outermost parts when the electrode assembly is wound.

3. The electrode assembly of claim **1**, wherein an insulation member is attached to at least one surface of the rear uncoated portion at the outermost part of the first electrode plate.

4. The electrode assembly of claim **3**, wherein the insulation member is attached to an inner surface of the rear uncoated portion of the first electrode plate that faces an outer surface of the rear uncoated portion of the second electrode plate.

5. The electrode assembly of claim **3**, wherein the insulation member is attached to an outer surface of the rear uncoated portion of the first electrode plate that faces an inner surface of the rear uncoated portion of the second electrode plate.

6. The electrode assembly of claim **3**, wherein the insulation member is attached to at least one surface of the front uncoated portion of the first electrode plate.

7. The electrode assembly of claim **3**, wherein the insulation member is attached to both surfaces of the front uncoated portion of the first electrode plate.

8. The electrode assembly of claim **3**, wherein the insulation member is an insulation tape.

9. The electrode assembly of claim **3**, wherein the insulation member is a laminating tape attached to a boundary portion between the active material layer and uncoated portion of the electrode tab.

10. The electrode assembly of claim **1**, wherein the first electrode plate is a cathode plate.

11. The electrode assembly of claim **1**, wherein the second electrode plate is an anode plate.

12. The electrode assembly of claim **3**, wherein the insulation member is a laminating tape attached to a boundary portion between at least one active material layer and uncoated portion of the at least one active material layer and extends to the end of the uncoated portion of the at least one active material layer.

13. A lithium secondary battery comprising:

a case; and

an electrode assembly comprising:

a cathode and an anode electrode plate each having uncoated portions on both ends of a collector;

a separator interposed between the cathode and anode electrode plates;

a cathode electrode tab provided at the outermost part of the cathode electrode plate; and

an anode tab provided at the outermost part of the anode electrode plate.

14. The lithium secondary battery of claim **13**, wherein the cathode and anode electrode plates and the separator are wound in a jelly-roll fashion.

15. The lithium secondary battery of claim **13**, further comprising a cathode electrode tab and an anode electrode tab respectively attached to rear uncoated portions of the cathode and anode electrode plates that are arranged at the outermost parts when the electrode assembly is wound.

16. The lithium secondary battery of claim **15** further comprising an insulation member attached to the boundary of the cathode electrode tab with the cathode electrode plate and the boundary of the anode electrode tab with the anode electrode plate.

17. The lithium secondary battery of claim **16**, further comprising an insulation member attached to at least one surface of the rear uncoated portions of either or both of the cathode and anode electrode plates and at least one surface of the front uncoated portions of either or both of the cathode and anode electrode plates at the boundary of the uncoated portions with the respective cathode and anode electrode plates and extending to the end of the respective cathode and anode electrode plates.

18. The lithium secondary battery of claim **13**, wherein the case further comprises:

an innermost insulating layer;

a middle metal layer; and

an outermost protective layer.

19. The lithium secondary battery of claim **13**, wherein a shape of the case is one of a pouch, a cylinder or a rectangle.

* * * * *