US 20140120258A1

(19) United States

(12) Patent Application Publication

Anderson et al.

(10) Pub. No.: US 2014/0120258 A1

(43) Pub. Date: May 1, 2014

(54) **WEB LIFTER/STABILIZER AND METHOD**

(75) Inventors: **Kim A. Anderson**, DePere, WI (US); **Eric Maki**, DePere, WI (US); **George Glenn**, DePere, WI (US)

(73) Assignee: **MegTec Systems, Inc.**, DePere, WI (US)

(21) Appl. No.: **14/122,753**

(22) PCT Filed: **Jun. 4, 2012**

(86) PCT No.: **PCT/US2012/040667**

§ 371 (c)(1), (2), (4) Date: **Nov. 27, 2013**

Related U.S. Application Data

(60) Provisional application No. 61/493,046, filed on Jun. 3, 2011.

Publication Classification

(51) **Int. Cl.**
B05C 3/132 (2006.01)

(52) **U.S. Cl.**
CPC *B05C 3/132* (2013.01)
USPC **427/256**; 226/196.1; 118/325

(57) **ABSTRACT**

Web lifter and/or stabilizer and method of lifting and/or stabilizing a travelling web and coating a web. The device creates a web hold down force via a negative pressure slot at its exit side, which draws the web down against the surface on the entry side. The device can be actuated to move the web relative to slot die coater off the die lips and stop the application of slurry to the web, thereby creating uncoated regions on the web surface. The device can be actuated to move the web back into contact with the coater to start the application of slurry to the web, creating coated regions on the web surface. Web lifting can be accomplished by rotating the device in first and second directions to lift the web off of the slot die coater and return the web back into contact with the coater.

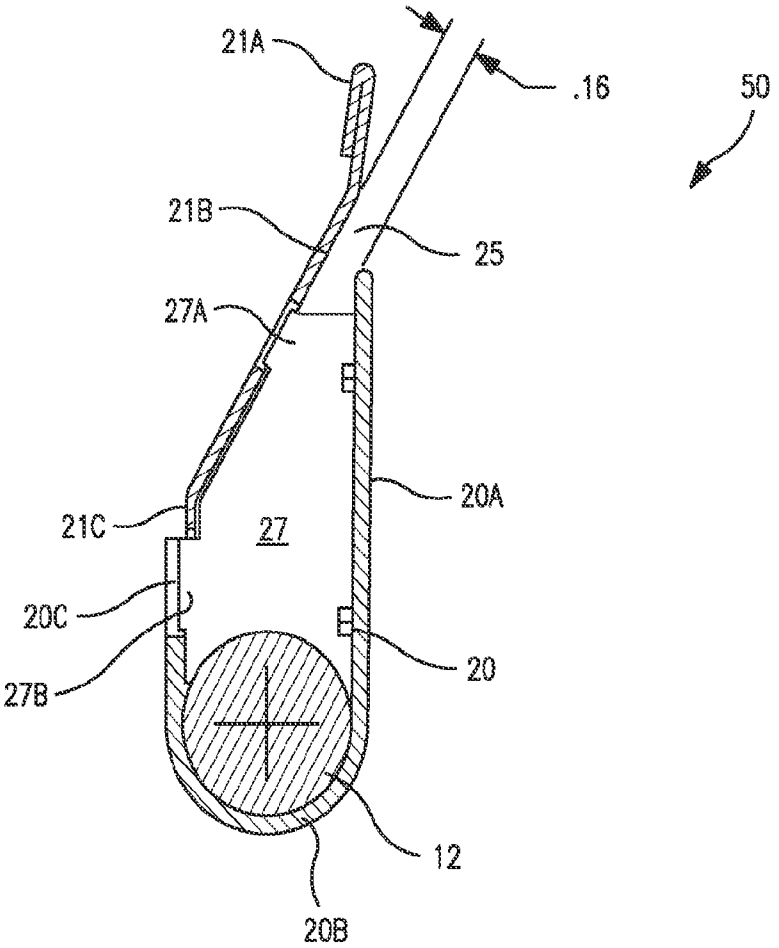

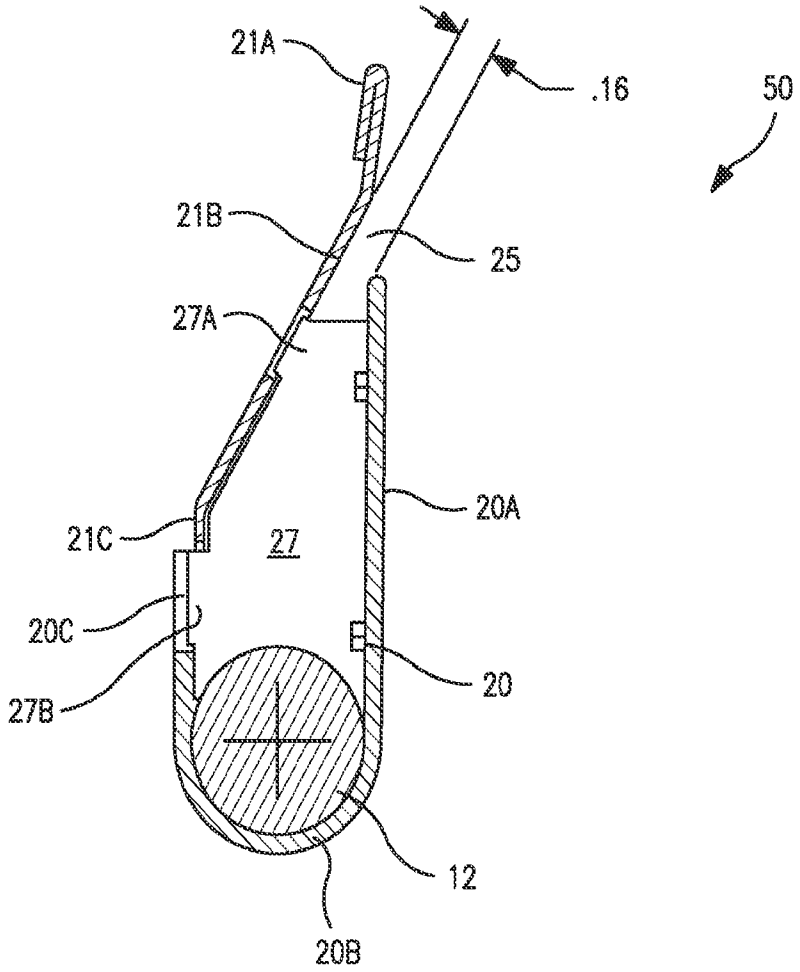

FIG. 1A

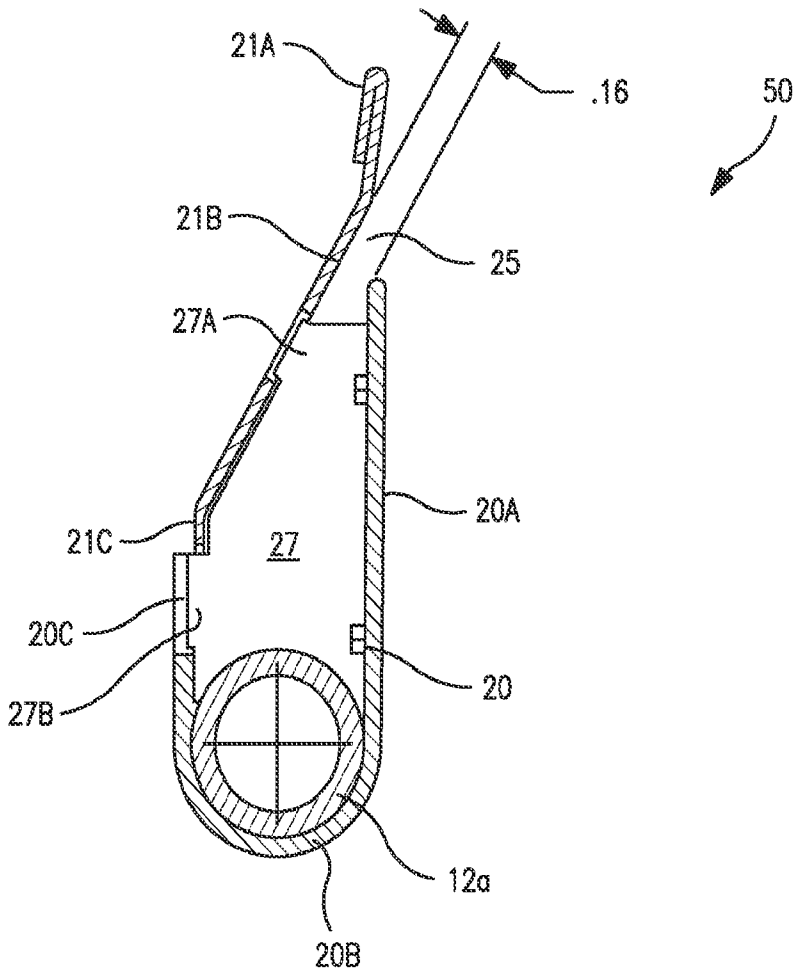

FIG. 1B

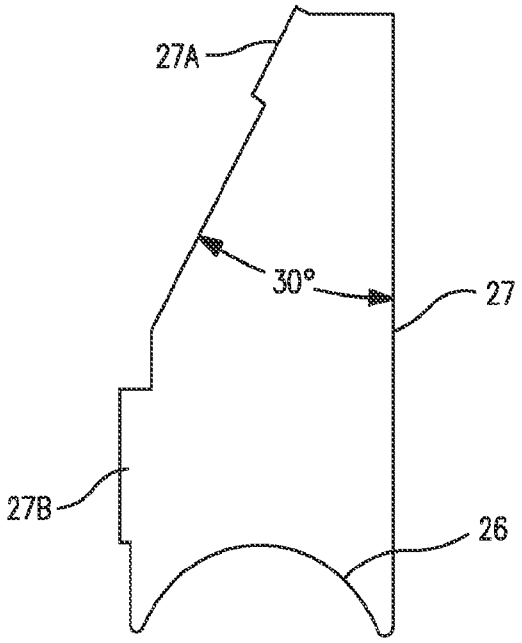

FIG. 2

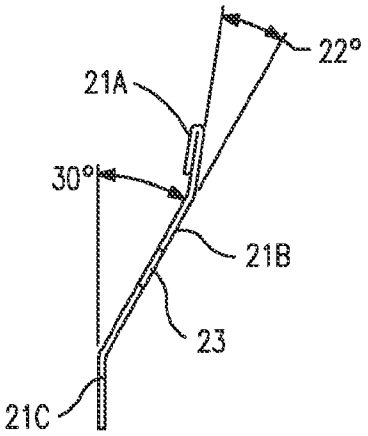

FIG. 3

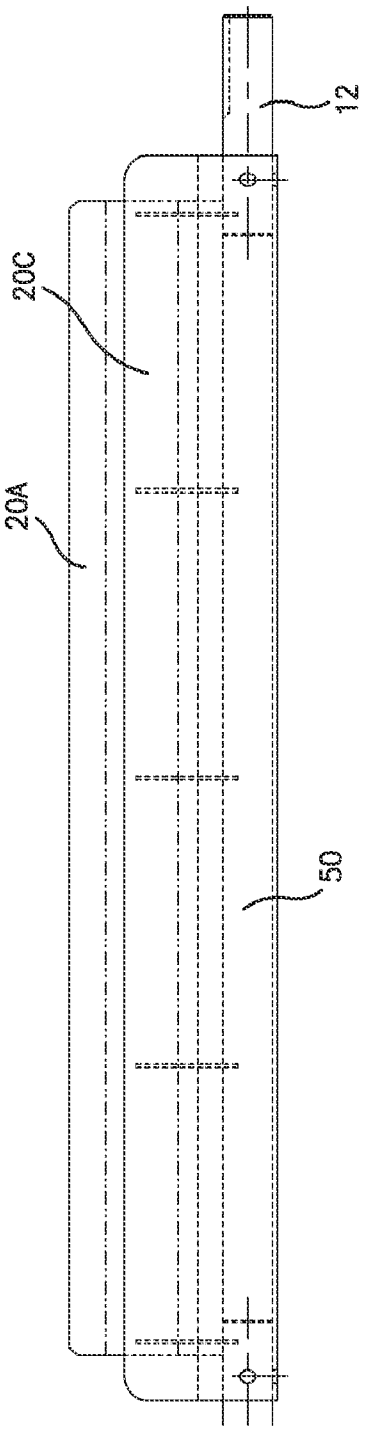

FIG. 4

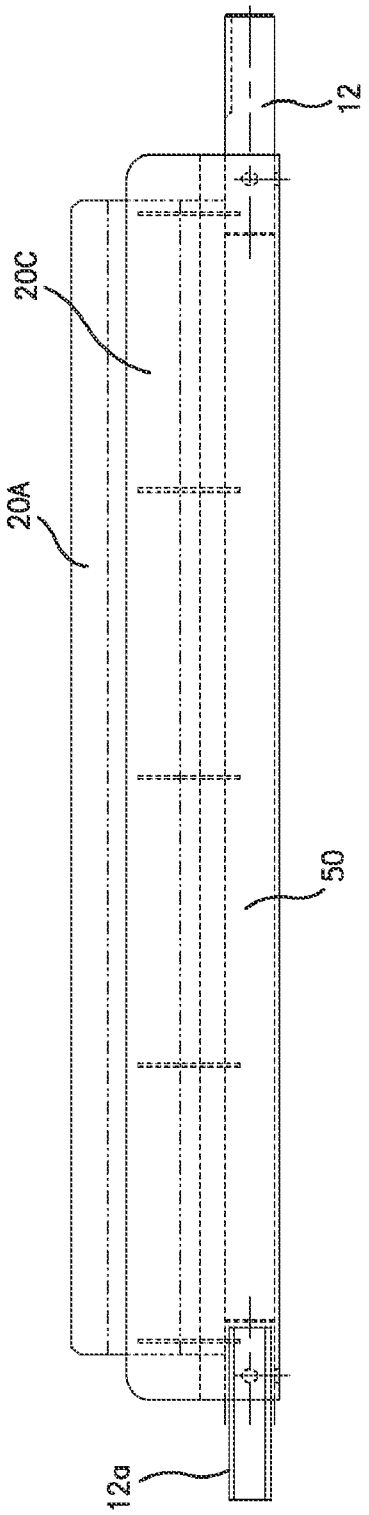

FIG. 4A

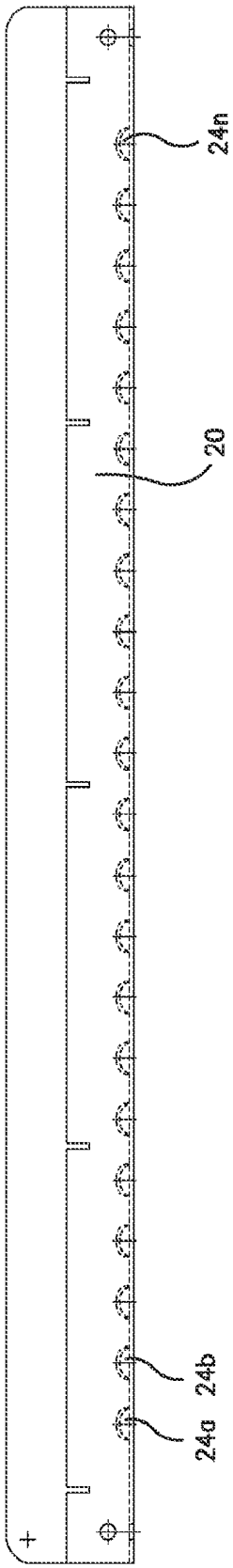

FIG. 5

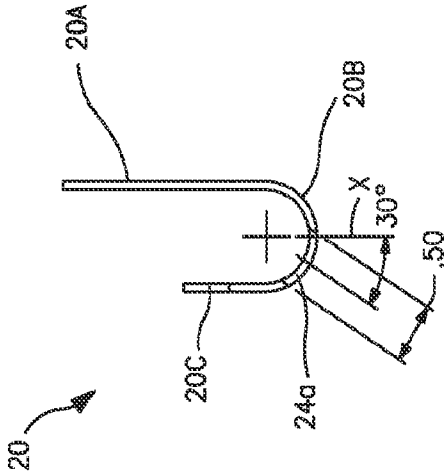

FIG. 6

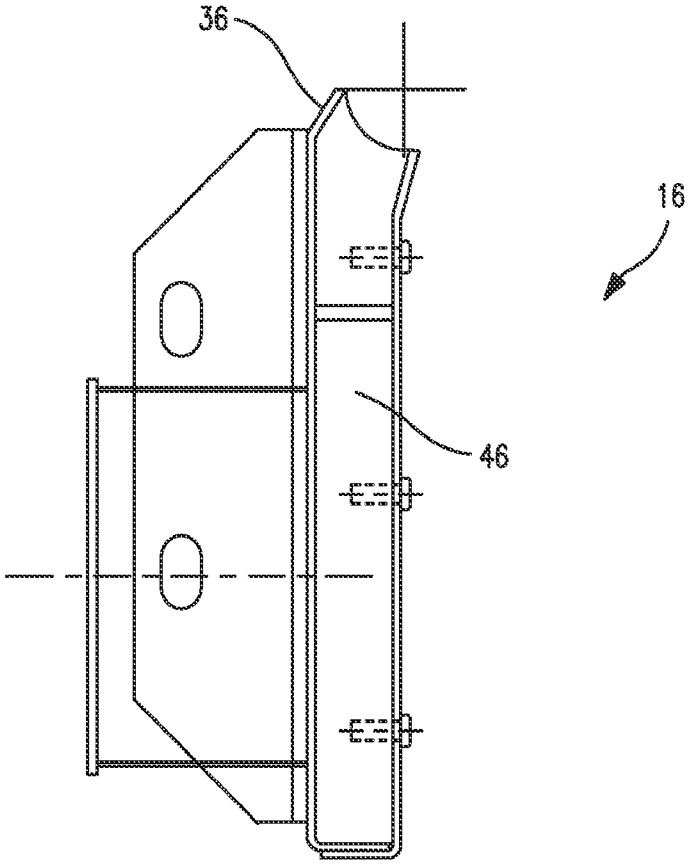

FIG. 7

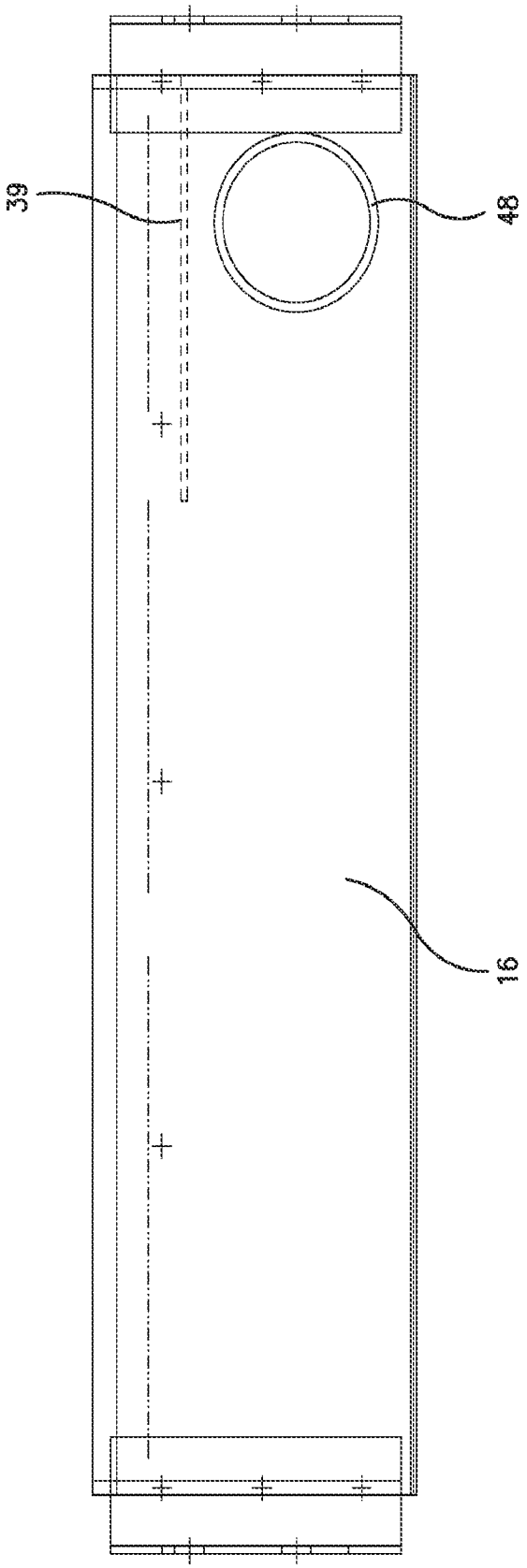

FIG. 8

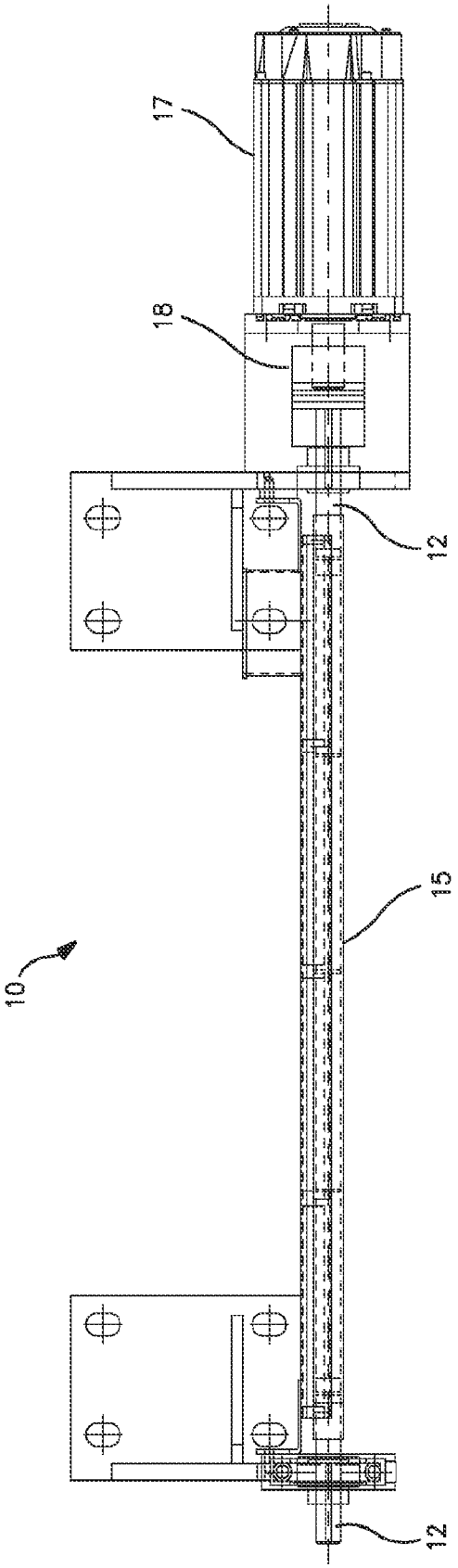

FIG. 9

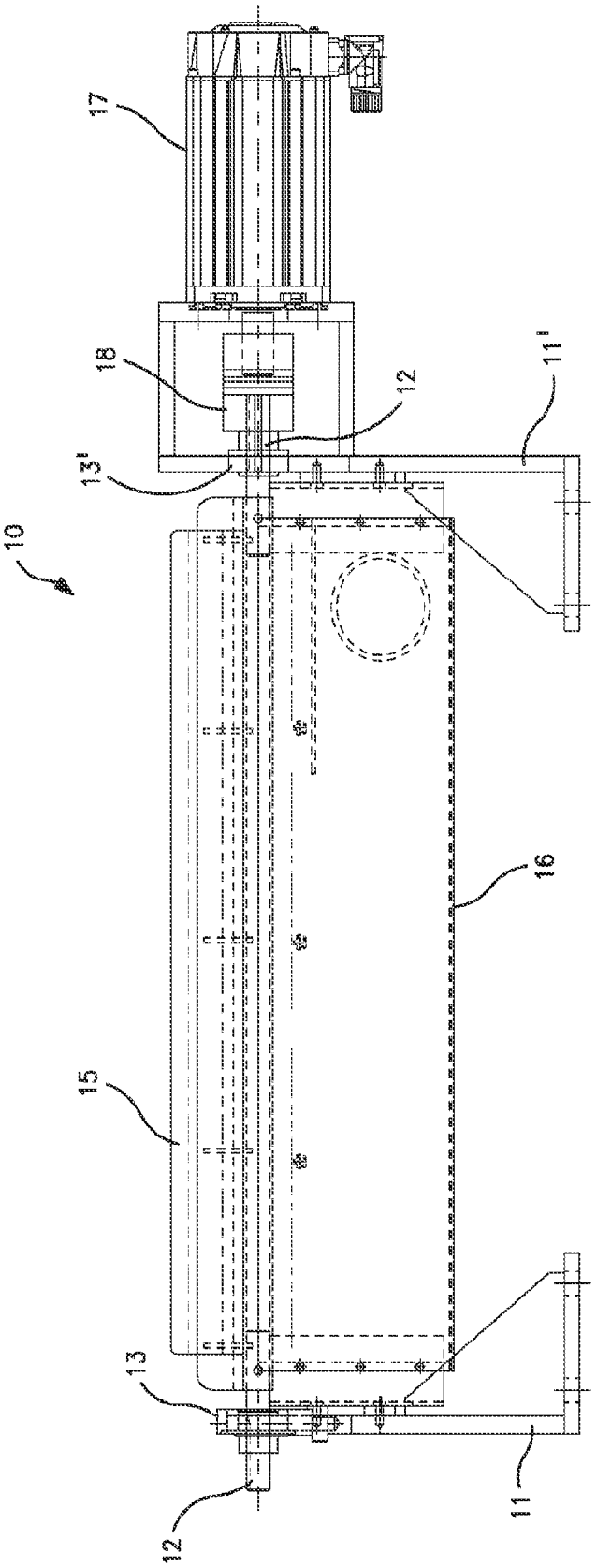

FIG. 10

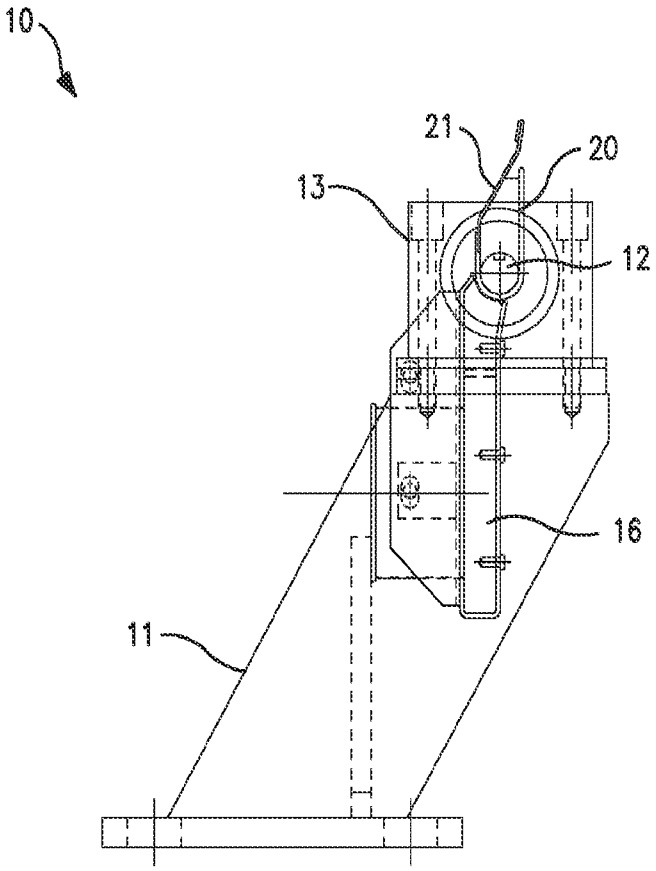

FIG. 11

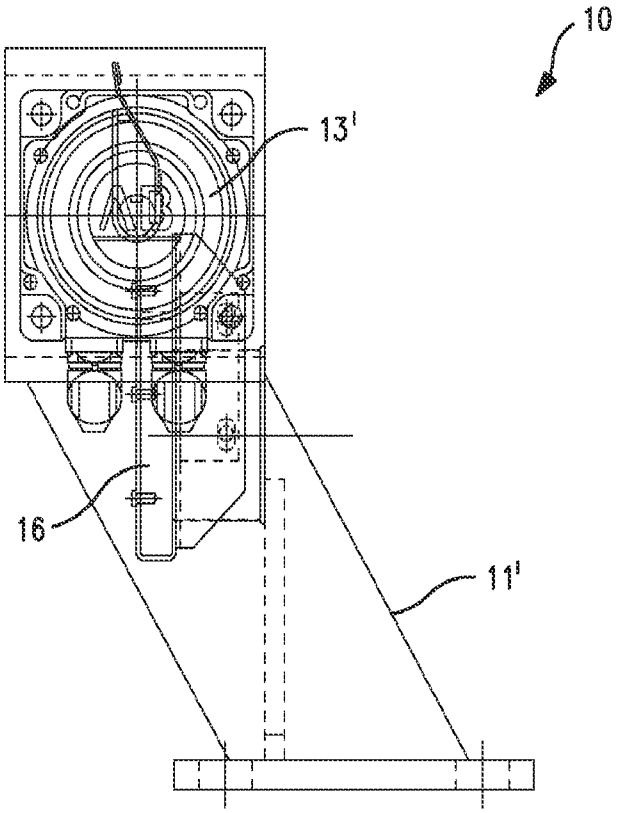

FIG. 12

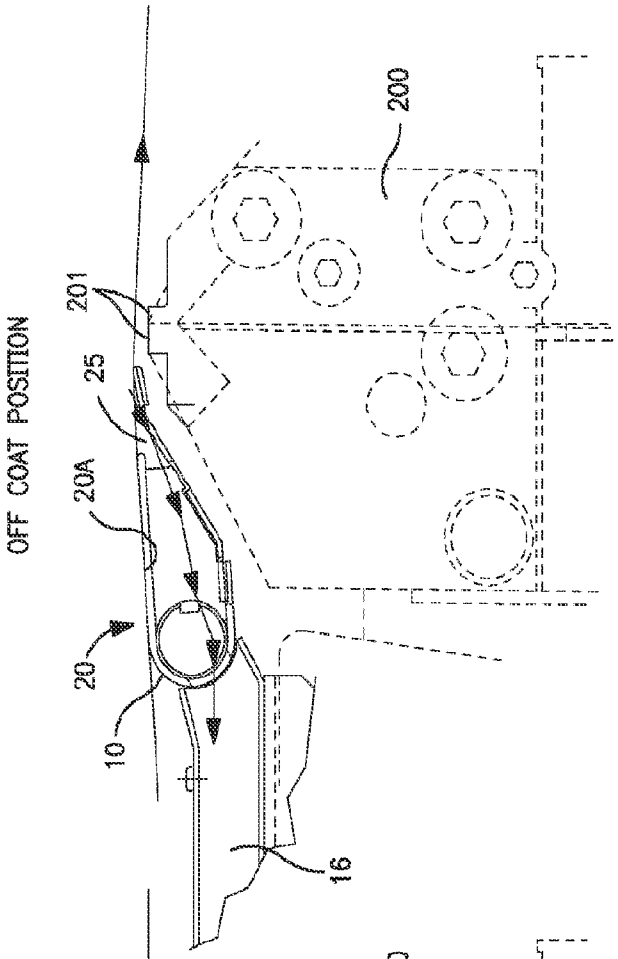

FIG. 13B

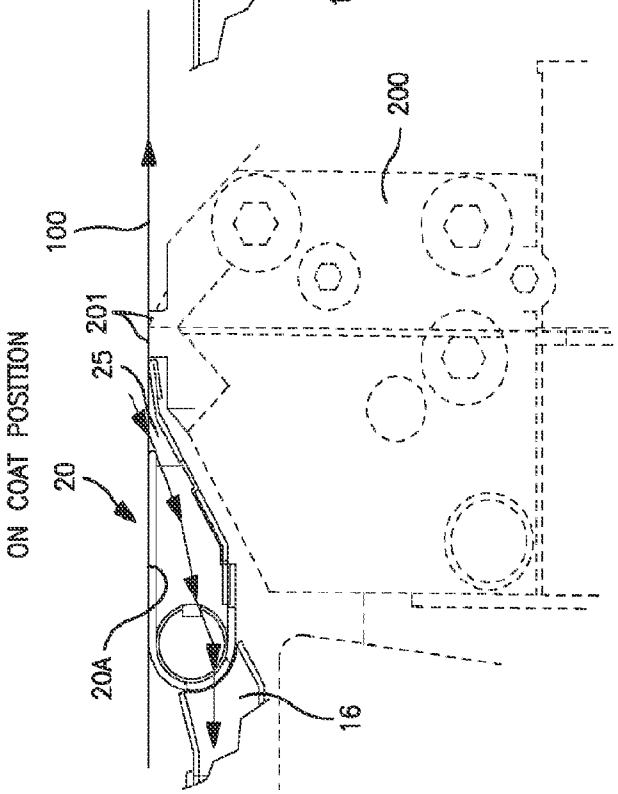

FIG. 13A

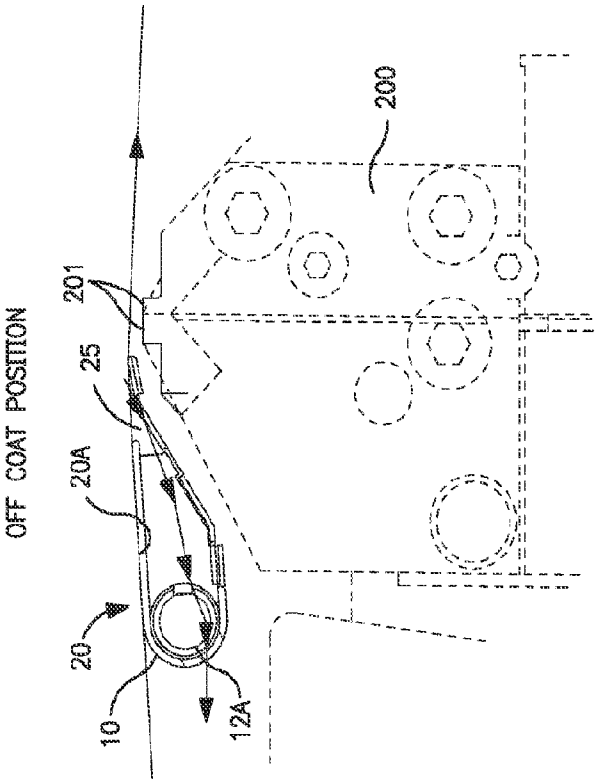

FIG. 14B

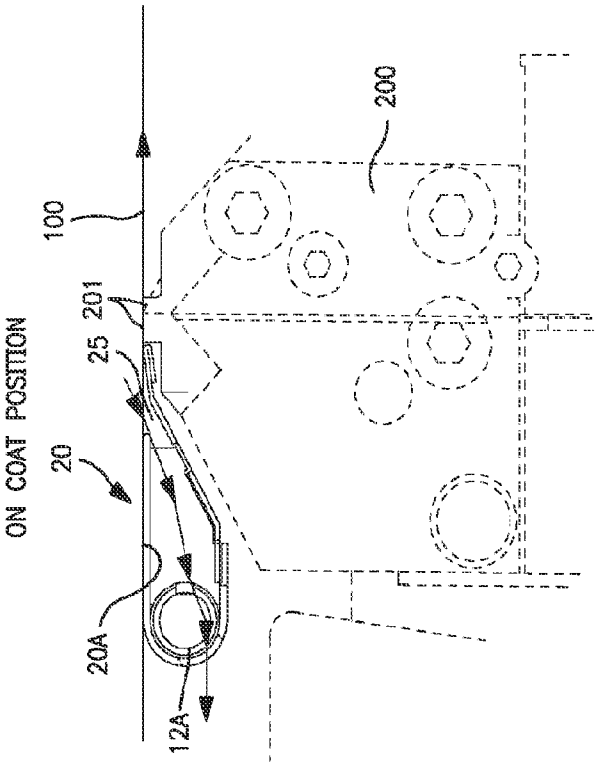

FIG. 14A

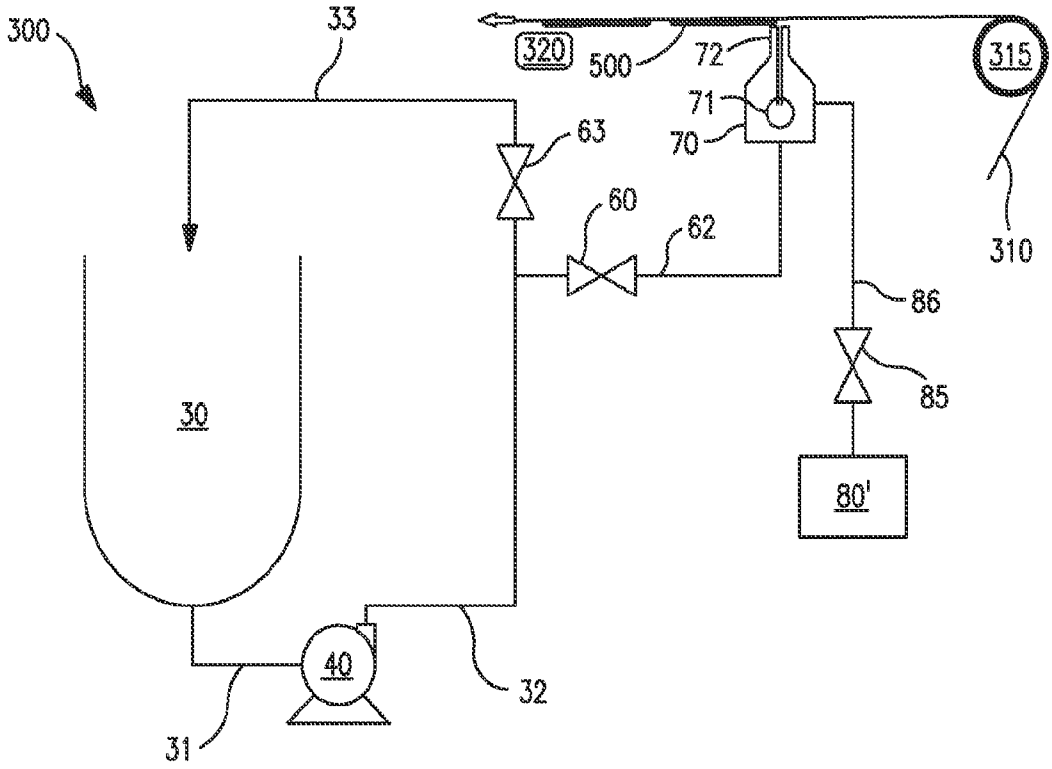

FIG. 15
(PRIOR ART)

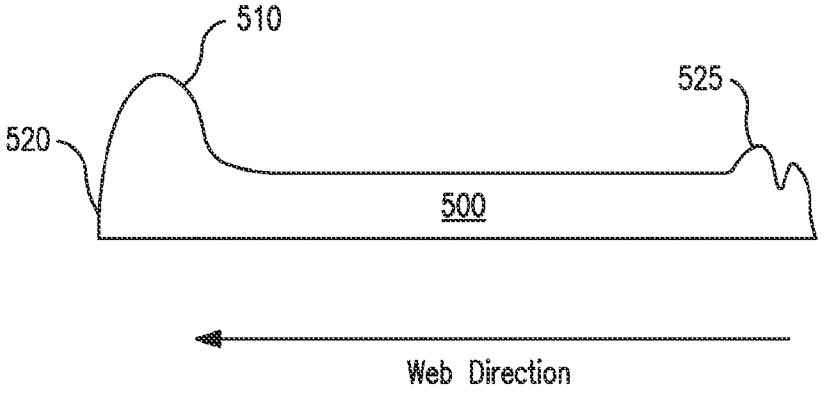

FIG. 16

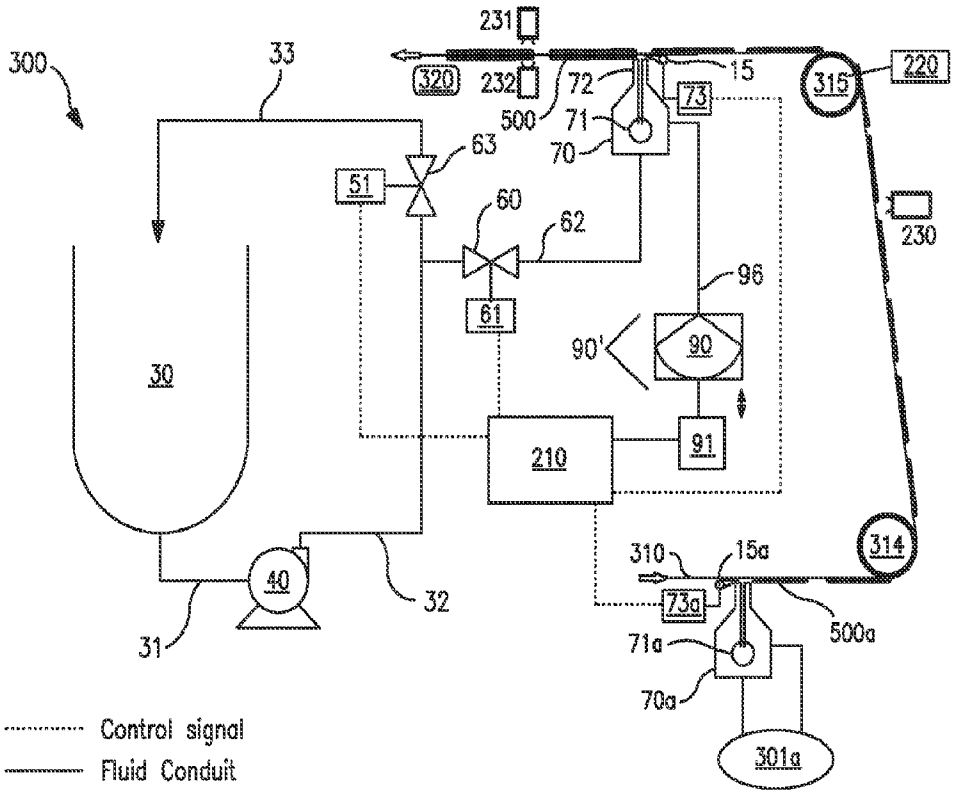
300
33
231
320
232
72
15
315
220
500
71
73
70
63
51
60
62
230
96
61
90'
90
30
210
91
310
15a
314
40
32
73a
500a
31
71a
70a
301a
Control signal
Fluid Conduit

FIG. 17

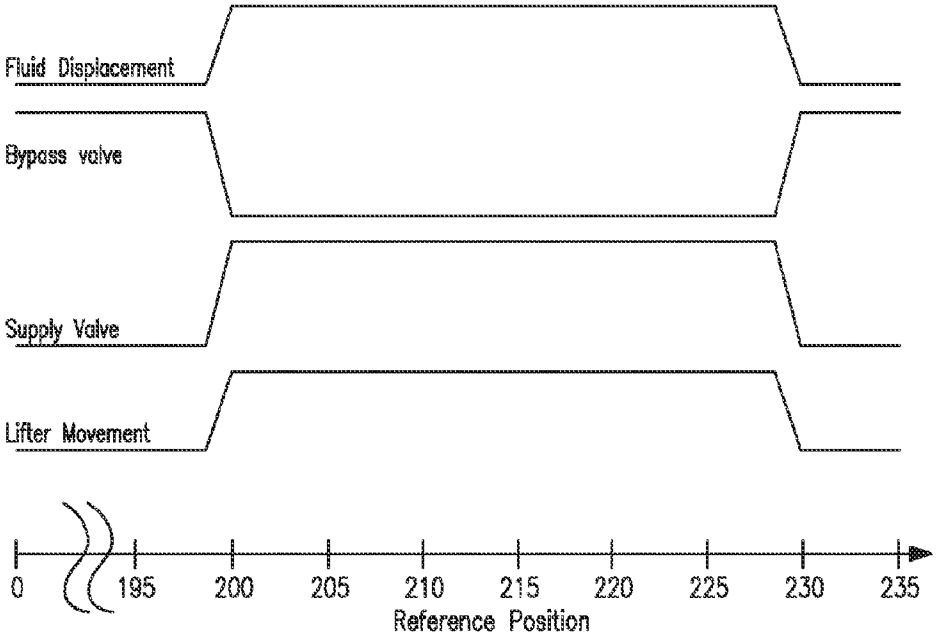
Fluid Displacement
Bypass valve
Supply Valve
Lifter Movement
0
195
200
205
210
215
220
225
230
235
Reference Position

FIG. 18

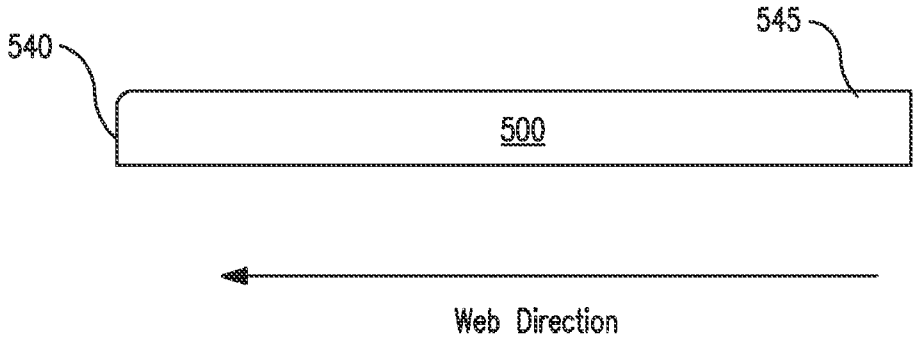

FIG. 19

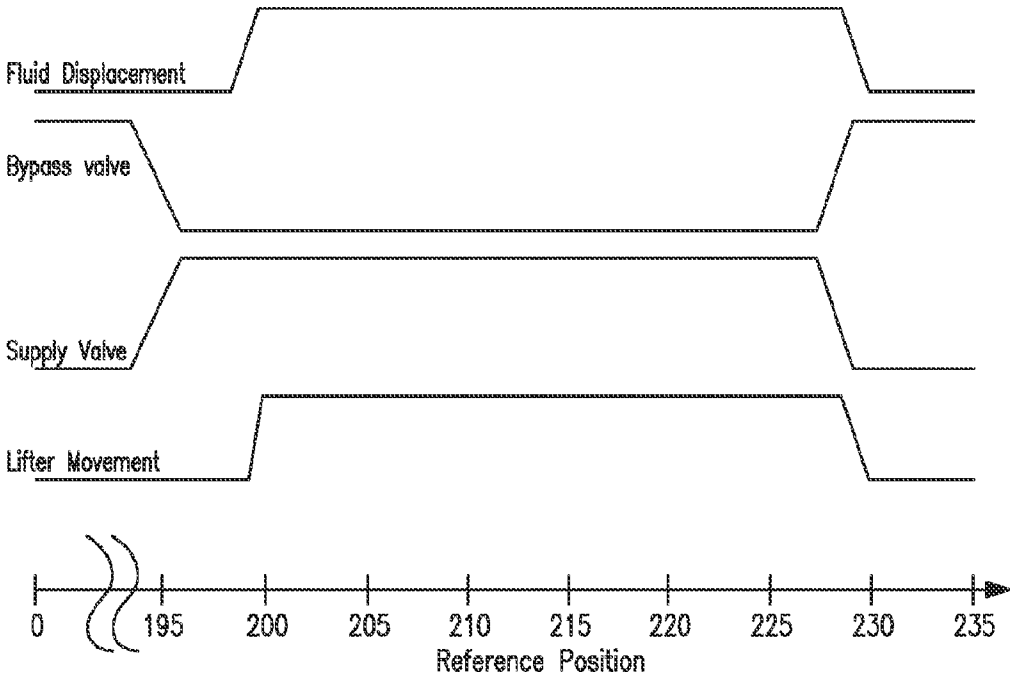
Fluid Displacement
Bypass valve
Supply Valve
Lifter Movement
0
195
200
205
210
215
220
225
230
235
Reference Position

FIG. 20

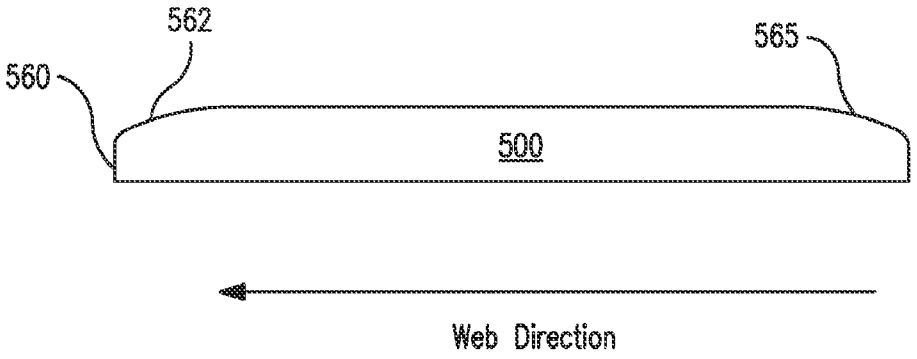

FIG. 21

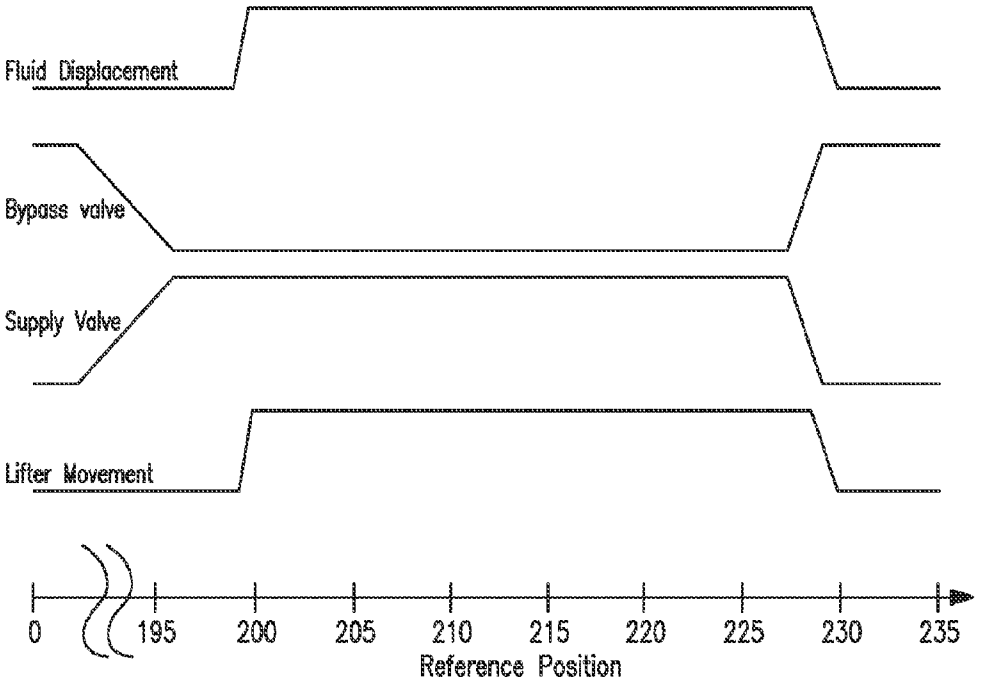
Fluid Displacement
Bypass valve
Supply Valve
Lifter Movement
0
195
200
205
210
215
220
225
230
235
Reference Position

FIG. 22

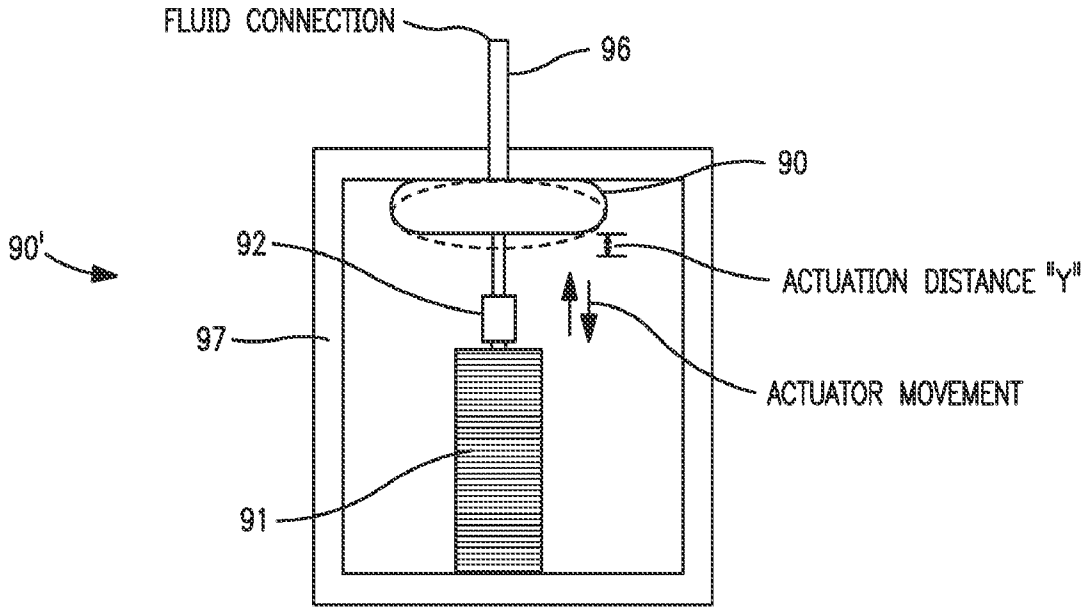
FLUID CONNECTION
96
90
90'
92
ACTUATION DISTANCE "Y"
97
ACTUATOR MOVEMENT
91

FIG. 23

WEB LIFTER/STABILIZER AND METHOD

[0001] This application claims priority of U.S. Provisional Application Ser. No. 61/493,046 filed Jun. 3, 2011, the disclosure of which is hereby incorporated by reference. This application is related to co-pending International Application No. PCT/US2012/033508 filed on Apr. 13, 2012, the disclosure of which is hereby incorporated by reference.

BACKGROUND

[0002] The embodiments disclosed herein relate to an apparatus and method for lifting and/or stabilizing a web, particularly applicable in intermittent coating operations, such as those used in manufacturing batteries, where the substrate is coated in a series of discrete patches. Further embodiments relate to a method for controlling said apparatus to provide precise control of length and thickness profile of said discrete coating patches.

[0003] There are various applications in which it is desirable to deposit a coating onto at least a portion of a sheet of material. For example, in some embodiments, the electrodes of batteries are produced by applying a layer or coating to a sheet, and then cutting the sheet into portions of a suitable dimension. Of particular importance is that the layer be applied at a uniform thickness. In some embodiments, the layer or coating is not applied to the sheet in the region where the sheet will subsequently be cut.

[0004] In the manufacture of lithium ion batteries and the like, there is a coating process that applies anode slurry to a conductive substrate (e.g., copper foil) and another coating process that applies cathode slurry to a conductive substrate (e.g., aluminum foil). In these two coating processes, there are two different methods of coating: discontinuous, also referred to as skip or patch coating, and continuous coating. In the practice of either method, the coating material may be applied to the continuously moving substrate in the form of one or more lanes running parallel to the travel direction of said continuously moving substrate. One method of coating known to those skilled in the art has a backing roller on which the moving substrate is conveyed in an arcuate path as it is supported and is positioned precisely by the surface of said backing roller. In some cases, it is not convenient or even possible to allow the web to contact a backing roller, such as in the case of coating both sides of the web with a wet material before both said applied coatings are dried. In the practice of the embodiments disclosed herein, the web is conveyed in a free span between web support elements. Said web support elements could be one or more idler rollers, vacuum tables or air flotation bars which position and guide the path of web travel in a straight path.

[0005] An example of such a prior art system is shown in FIG. **15**, wherein slurry is applied to the moving substrate web **310** in a free span between web support elements **315** and **320** via a slot die coater **70** attached to a pumping station. The coating is typically held in a tank or reservoir **30**. The coating is drawn from the reservoir **30**, through conduit **31** by pump **40**. The coating is then passed through conduit **32** by the action of the pump **40**. In the case where coating is not being applied to the sheet **10**, bypass valve **63** is open while supply valve **60** is closed. This allows the coating that is pumped through conduit **32** to pass through conduit **33** and back to reservoir **30**. In the case where coating is being applied to the sheet **10**, the bypass valve **63** is closed, while supply valve **60** is opened. This permits the flow of coating through conduit **62** to the nozzle **70**, and onto the sheet **10**. While the supply valve **60** is open, the coating is discharged by the nozzle **70**. However, when the supply valve **60** is closed, the pressure needed to propel the coating through the nozzle **70** is eliminated. In some cases, this causes excess coating material to remain in the cavity, or manifold **71**, and the lips **72** of the nozzle. When the supply valve is next opened, this excess material may cause an uneven application of coating to the sheet **10**. FIG. **16** shows an example of the result of this phenomenon on the coated patch thickness. Coated patch **500** is shown as a cross-section profile of thickness "x" applied to web **10**. As the sheet moves toward the left, starting profile **520** is thicker than the rest of the coating **500**. This excess material **510** is due to the residual coating material that remained in the nozzle **70** after the supply valve **60** was closed. In this figure, the ending profile **525** is shown to be uneven, as the valves may be transitioning while the coating is still being applied. Such an uneven coating may be unacceptable.

[0006] Therefore, to prevent this uneven application, a fluid suction mechanism **80'** may be used, as shown in FIG. **15**. This fluid suction mechanism is used to draw the excess coating that is left in the manifold **71** or on the lips **72** away from the nozzle **70**. In operation, pump **40** draws coating material from reservoir **30**. The coating material passes through conduits **31**, **32** and is directed toward the nozzle **70**, where it is discharged onto the sheet **10** as the sheet is drawn past roller **15**. To stop the flow of coating onto the sheet **10**, the bypass valve **63** is opened and the supply valve **60** is closed, thereby diverting the coating material through conduit **33** and back into the reservoir **30**. To remove excessive coating material that may be present in the manifold **71** or on the lips **72** of the nozzle **70**, valve **85** is opened to suction source **80** so that fluid is drawn by vacuum through conduit **86** which is in fluid communication with die manifold **71**. The suction source **80** is typically comprised of a vacuum reservoir tank in communication with a suction pump to create a draw of fluid from die cavity **71** when valve **85** is opened. Coating fluid material is collected in said reservoir tank and periodically removed for reuse or, more often, discarded as waste material.

[0007] To restart the flow of coating onto the sheet **10**, valve **85** is closed to remove the vacuum drawing fluid through conduit **86**. Bypass valve **63** is closed while supply valve **60** is opened.

[0008] In the practice of free span coating, the planarity of the web is of significant importance in applying a uniform thickness of coating fluid to the web in the direction of web travel and in the cross-web direction. As the foil web approaches the slot die coater, the web must remain flat as it travels over the slot die coater, but due to a baggy web or tension corrugation in the thin foil, the web will tend to lift off the slot die coater or otherwise deviate from the desired path of travel resulting in a non-uniform gap between the fluid discharge lips of said slot die coater and the web surface to be coated. Without a uniform gap to the slot die coater discharge lips, the coating process creates defects in the coated web, such as non-uniform thickness of applied coating, ridges or streaks.

[0009] It therefore would be desirable to provide an apparatus and method for stabilizing the web in the free span to help provide defect-free coatings. It would also be desirable to utilize the same apparatus to move the web relative to the slot die coater to an off coat position in order to create the uncoated portion of the web, and return the web to an on coat position in order to create the coated portion of the web. This

web movement would be especially useful in discontinuous coating of patches in precise position spacing and uniformity to precisely control the lengths and thickness profile of the coated and non-coated patches along the direction of travel. It would further be desirable to provide a device for guiding and flattening a running web.

SUMMARY

[0010] Problems of the prior art have been overcome by the embodiments disclosed herein, which relate to a web lifter and/or stabilizer and method of lifting and/or stabilizing a travelling web of material. In accordance with certain embodiments, the device creates a web hold down force via a negative pressure slot at the exit side of the device. This negative pressure slot draws the web down against the surface on the entry side of the device, which in certain embodiments is a highly polished flat metal surface. The need for a precision backing roll is eliminated.

[0011] In accordance with certain embodiments, the device can be actuated to move the web relative to a slot die coater used in a skip coating or intermittent coating operation, to move the web off the die lips and stop the application of coating (e.g., slurry) to the web, thereby creating uncoated regions on the web surface. The device can then be actuated to move the web back into contact with the slot die coater to start the application of coating to the web, thereby creating coated regions on the web surface. In certain embodiments, the web lifting is accomplished by rotating the device in a first direction to lift the web off of the slot die coater and rotating the device back in an opposite direction to return the web back into contact with the slot die coater. A controller can be used to actuate the device.

[0012] In accordance with certain embodiments, the device can be used to guide and flatten a travelling web in a web path. Such a device need to be rotatable when lifting the web of a slot die coater is not necessary.

[0013] In certain of its method aspects, in certain embodiments a coater for intermittently applying a coating to a web is provided, and the web lifter and/or stabilizer is provided upstream of the coater, in the direction opposite of web travel, in a first position. Negative pressure is applied to the web lifter and/or stabilizer body, causing air to enter the air entry slot and flow to the vacuum chamber. When a gap or skip in coating is desired on the web surface, the web lifter body is rotated from the first position in a direction toward the web to deflect the web away from the coater (e.g., away from the coater lips) to form a coating gap (e.g., an area devoid of coating) on the web. The body is then rotated back to the first position once the desired gap is formed, and negative pressure is maintained during both direction rotations.

[0014] In a preferred embodiment, a computer-controlled fluid delivery system provides precise control of the actuation of the valves and movement of the web lifter/stabilizer to create a plurality of coating profiles. The system includes a controller, which is used to actuate the valves to begin and terminate the flow of material onto the sheet through a slot die nozzle. In addition, the controller may displace the web from its on-coat position to an off-coat position away from the sheet by movement of the web lifter/stabilizer. In some embodiments, a fluid displacement mechanism is used to temporarily withdraw coating fluid from the slot die lips during the off-coat cycle and return the fluid to the lips during the next on-coat cycle. In two-side coating embodiments, the controller is also able to control the start and end locations of the coated patches on the opposite side of the sheet. Registration of the coating can be programmed to be in exact alignment, or advanced or delayed by a specific amount. In addition, the present system is a position based system, thereby being capable of automatically accommodating changes in line speed.

BRIEF DESCRIPTION OF THE DRAWINGS

[0015] FIG. **1**A is a cross-sectional view of a portion of the web lifter and stabilizer in accordance with certain embodiments;

[0016] FIG. **1**B is a cross-sectional view of a portion of the web lifter and stabilizer in accordance with an alternative embodiments;

[0017] FIG. **2** is a front view of a gusset for the web lifter and stabilizer in accordance with certain embodiments;

[0018] FIG. **3** is a cross-sectional view of a portion of the web lifter and stabilizer in accordance with certain embodiments;

[0019] FIG. **4** is a top view of the portion of FIG. **1**A;

[0020] FIG. **4**A is a top view of the portion of FIG. **1**B in accordance with an alternative embodiment;

[0021] FIG. **5** is a bottom view of a portion of the web lifter stabilizer in accordance with certain embodiments;

[0022] FIG. **6** is a cross-sectional view of the portion of FIG. **5**;

[0023] FIG. **7** is a side view of a vacuum reservoir in accordance with certain embodiments;

[0024] FIG. **8** is a top view of the vacuum reservoir in accordance with certain embodiments;

[0025] FIG. **9** is a top view of the assembly of the web lifter and stabilizer rotation device in accordance with certain embodiments;

[0026] FIG. **10** is a top view of the complete assembly of web lifter and stabilizer in accordance with certain embodiments;

[0027] FIG. **11** is a first side view of the web lifter and stabilizer assembly in accordance with certain embodiments;

[0028] FIG. **12** is a second side view of the web lifter and stabilizer assembly in accordance with certain embodiments;

[0029] FIGS. **13**A and **13**B are schematic diagrams showing the web lifter and stabilizer and a slot die coater in the on coat position and the off coat position in accordance with certain embodiments;

[0030] FIGS. **14**A and **14**B are schematic diagrams showing the web lifter and stabilizer and a slot die coater in the on coat position and the off coat position in accordance with certain alternative embodiments.

[0031] FIG. **15** shows an example of prior art practice in coating a web in free span with a slot die nozzle;

[0032] FIG. **16** shows the profile of a coating applied to the sheet using the system of FIG. **15**;

[0033] FIG. **17** shows a representative system in accordance with certain embodiments;

[0034] FIG. **18** shows a timing diagram used to produce the coating profile of FIG. **16**;

[0035] FIG. **19** shows a second profile of a coating that may be applied to a sheet in accordance with certain embodiments;

[0036] FIG. **20** shows a timing diagram used to produce the coating profile of FIG. **19**;

[0037] FIG. **21** shows a third profile of a coating that may be applied to a sheet in accordance with certain embodiments;

[0038] FIG. **22** shows a timing diagram used to produce the coating profile of FIG. **21**; and

[0039] FIG. **23** shows a representative embodiment of an optional fluid displacement mechanism.

DETAILED DESCRIPTION

[0040] Turning first to FIGS. **10-12**, there is shown an exemplary embodiment of a web lifter and stabilizer assembly **10** in accordance with certain embodiments. The assembly **10** includes mounting brackets **11**, **11'**, which support a pair of oppositely located shaft stubs **12** via bearing mounts **13**, **13'**, web lifter and stabilizer **15**, and vacuum reservoir **16**. The web lifter and stabilizer has a rotatable element **15** comprised of a wing-shaped body **50** (FIG. **1**) having a first portion defining a leading edge of said apparatus when in operation, and a second portion defining a trailing edge when in operation, the first portion being spaced from the second portion so as to define a slot **25** between them for the entry of air upon the application of negative pressure to the body **50**. Vacuum reservoir **16** is in fluid communication with the body **50** for receiving air entering the slot **25**; the body being rotatable between a first position in which the web travels in an undeflected state, and a second position in which the web is deflected by the body **50** so as to travel in a deflected state. A driving force, such as a servo-motor **17**, is attached to the shaft stubs **12** that are welded to each end of the body **50** to rotate this body **50**. A 3000 rpm motor has been found to be suitable, although the embodiments disclosed herein are not limited thereto. For example, an air cylinder activated by a solenoid-operated valve could be mechanically coupled to said shaft to move the lifter assembly between the coat and off-coat positions. One of the shaft stubs **12** is attached to the motor via a coupling **18**. A bellows servo style coupling has been found to be suitable for this purpose, although the embodiments disclosed herein are not limited thereto. In certain embodiments, two shaft stubs are provided and welded to the body with a space in between for air from slot **25** to pass through apertures **24***a* through **24***n* into reservoir **16**.

[0041] In a preferred embodiment, the vacuum reservoir **16** and apertures **24***a* to **24***n* are eliminated and the suction air flow path is alternatively made through one or more hollow shafts **12***a* (FIGS. **1**B and **4**A) connected by suitable means such as a flexible hose or rotary fitting (not shown) to a suction source. In this embodiment, the hollow shaft **12***a* can replace the solid shaft **12** and one or both ends of the assembly **50**. The shafts can be shaft stubs (rather than full length of the assembly) that do not extend all the way across the length of assembly **50**. This allows the air to pass through the bulbous part of the wing assembly **50**. In FIG. **4**A (which corresponds to an end view shown in FIG. **1**B) the hollow shaft stub **12**A extends only partly into the assembly **50**, as shown. Similarly, the non-hollow shaft stubs **12** in the embodiment of FIG. **4** (which corresponds to an end view shown in FIG. **1**A) extend only partly into the assembly **50**. In both embodiments **4** and **4**A, the air enters the slot **25** and is guided inside the wing assembly bounded by surfaces of the J shaped member **20**, the bent member **21**, and the gussets **27** which close off each end of the wing assembly in conjunction with the shaft stubs **12** or **12**A. In the embodiment of FIG. **4**, the air then passes through apertures **24***a*-**24***n* as depicted in FIGS. **13**A and **13**B, and into vacuum reservoir **16**. In the embodiment of FIG. **4**A having hollow shaft stubs **12**A, the apertures in the J-shaped member **20** and the vacuum reservoir **16** are eliminated.

The air flow path from slot **25** is again bounded by surfaces of the J shaped member **20** (devoid of apertures) and the bent member **21** and guided to one or both ends of wing assembly **50** having at least one hollow shaft stub **12**A connected to a suction source. The air passes through the hollow shaft stub or shaft stubs **12**A into the suction source (not shown) as depicted in FIGS. **14**A and **14**B.

[0042] Turning now to FIGS. **1-6**, there are shown details of the web lifter and stabilizer assembly **10** in accordance with certain embodiments. For simplicity, the vacuum reservoir **16** is not shown in these figures. The body **50** includes an elongated J-shaped member **20** coupled to elongated bent member **21**. Although two separate members are shown, those skilled in the art will appreciate that a single integral body **50** could be formed. As best seen in FIG. **4**, elongated J-shaped member **20** is longer in the web width direction than bent member **21**, since the web **100** is always wider than the coated area (e.g., by at least 25 mm). Extending the J-shaped member out beyond the die lips of a slot die coater **200** helps stabilize the uncoated edges of the web **100**. If this were not in place, the edges would crease and flip up and down as they traveled over the die, creating coating defects at the edge of the coating. Elongated J-shaped member **20** includes a straight or flat portion **20**A that contacts the web when the device is in the on coat position, and defines the aforementioned leading edge. Preferably the surface of the portion **20**A is a smooth and highly polished (e.g., to a mirror finish) metal surface. In certain embodiments, a low friction coating such as TEFLON® may be applied to surface of **20**A. Anti-friction coatings may include anti-wear elements such as ceramic beads to reduce friction and resist wear. Such coatings are available from Racine Flame Spray of Racine, Wis., USA, and other sources of plasma spray coatings. The surface may also be machined to a smooth surface. Elongated J-shaped member **20** also includes a curved or U-shaped portion **20**B, the U-shape having a curvature matching that of the shaft stubs **12** and a radius slightly larger than the radius of the shaft stubs **12** so that the shaft stubs **12** sit within the U-shape as seen in FIG. **1**. As best seen in FIGS. **5** and **6**, the U-shaped portion **20**B of the elongated J-shaped member includes a plurality of spaced apertures **24***a*-**24***n* along its length. In certain embodiments, the apertures **24***a*-**24***n* are each 0.5 inches in diameter, and are positioned so that the center of each aperture is 30° from the longitudinal centerline x (FIG. **6**) of the J-shaped member **20**. The apertures **24***a*-**24***n* are located between the spaced shaft stubs **12**, and allow for fluid communication from the slot **25** to the vacuum reservoir, as discussed in greater detail below. Extending from the U-shaped portion **20**B is straight portion **20**C, which is shorter than straight portion **20**A. In the embodiment shown, the U-shaped member **20**B, the portion **20**A and the straight portion **20**C are a single, integral metal piece.

[0043] FIGS. **1** and **3** also show the bent member **21**, which in certain embodiments includes a short top portion **21**A, which bends at a 22° angle to middle portion **21**B, which in turn bends at a 30° angle to bottom portion **21**C. In certain embodiments, the short top portion **21**A has an overlapping bend to keep it straight/flat and to make it rounded so as to not rip the web. In certain embodiments the top portion **21**A may be fabricated from a strip of machinable material and milled to a specified flatness matching the flatness of the die lips upon which the surface **21**A rests when in the on-coat position. Bottom portion **21**C is coupled to portion **20**C of the elongated J-shaped member **20** such as by welding. The bent member **21**B includes a plurality of spaced punched slots **23**, each preferably centrally located along the length of the bent member to receive tabs **27**A and **27**B on gusset **27** (FIG. **2**).

When so coupled, the middle portion **21**B of bent member **21** cooperates with straight portion **20**A of elongated J-shaped member **20** to form a slot **25** (FIG. **1**). In certain embodiments, the slot **25** can be 0.16 inches wide. In certain embodiments, negative pressure is applied to the slot **25** in the range of from 0.5 inches to 1.5 inches wc, depending on the tension in the web. In certain embodiments, the middle portion **21**B is angled such that when the device is in operation and in the on coat position, the middle portion **21**B is parallel or substantially parallel to the side of the slot die coater **200**. The short top portion **21**A defines the aforementioned trailing edge of the body **50**.

[0044] A plurality of spaced gussets **27** (FIG. **2**) are positioned in spaced relation along the length of the device. Tab **27**A of each gusset **27** is received in a respective slot **23** of bent member **21** and tack welded there. Tab **27**B of each gusset **27** is received in a respective cutout at the terminal end of portion **20**C of elongated J-shaped member **20**. In certain embodiments, there are five spaced gussets positioned along the length of the device. Each gusset **27** includes an arc-shaped bottom portion **26** configured to accommodate the shaft **12**. The gussets help hold the vacuum slot **25** gap/width and help in maintaining cross web surface flatness.

[0045] Turning now to FIGS. **7**-**12**, there is shown vacuum reservoir **16**. In certain embodiments, the vacuum reservoir **16** includes an arc-shaped portion **36** that connects to the U-shaped portion **20**B of the elongated J-shaped member **20**, as can be seen in FIG. **11**. This creates fluid communication between the slot **25** and the vacuum reservoir **16** so that air entering the slot **25** passes through the plurality of holes **24***a*-**24***n* in the U-shaped member and enters the vacuum reservoir, and then ultimately flows back to the fan inlet and is dumped to ambient. Preferably the radius of the arc-shaped portion matches the radius of the U-shaped portion to facilitate the connection. The arc-shaped portion **36** bends at its distal end to define an elongated portion **46** that forms the remainder of the vacuum reservoir. An aperture **48** (FIG. **8**) is formed in a wall of the reservoir **16** to provide fluid communication to a vacuum source, such as a fan, through suitable ducting and/or hosing. In certain embodiments, the negative pressure is drawn from the backside of the reservoir **16** outside the web width for the feed hose clearance, a **1"** we slot pressure difference is created across the length of the reservoir, with the side closest to the hose connection **48** being higher. To accommodate this, a perforated diverter **39** can be placed in the reservoir as shown in FIG. **8** to even out the cross web pressures in the vacuum slot. The size of the diverter will depend in part on the width of the web stabilizer, and the determination thereof is within the skill in the art.

[0046] A remote mounted fan can be used as the source of negative pressure, or the inlet of the supply fan in the web dryer that may be associated with the assembly can be used as the suction source. A flex hose with a damper to control negative pressure can be attached to the vacuum reservoir via the hole **48**.

[0047] In operation during a continuous web coating process, the device **10** is placed next to a slot die coater **200**, immediately upstream thereof, in the direction opposite of web travel, as shown in FIG. **13**A. The device is stationary and negative pressure is applied to the slot **25** (e.g., negative pressure is applied to the body, through the vacuum reservoir **16** or through a passage in shaft **12***a*, such as with a fan or the like) to flatten the web and hold it down on the slot die coater **200** positioned immediately downstream of the device **10**. As the moving web **100** travels over the leading highly polished surface **20**A of the web lifter and stabilizer assembly **10**, a static or frictional force is created that attracts the foil web **100** to the flat surface **20**A of the device to assist in flattening the web along with the negative pressure slot **25**. In a preferred embodiment, the negative pressure applied at slot **25** is typically in the range of −0.2 to −2 inches of water and may be adjusted by means of a valve (not shown) in the vacuum line connected to the suction source to obtain the desired degree of flattening while minimizing the amount of frictional drag imparted on the moving web. In certain embodiments, the device is positioned within 0.375 to 0.500 inches of the slot die coater **200** discharge area, and slightly below the discharge lips **201** of the slot die coater **200** to allow the web to wrap over the slot die coater for better contact and coating quality during coating. When a gap is desired in the coating on the web **100**, the device **10** is rotated about the longitudinal axis of the shaft stubs **12** (and **12***a* with alternate suction through shaft **12***a*), such as from 1 to 3 degrees depending on the process control, such as by actuating a shaft stub **12** with motor **17**, to lift the web **100** off of the slot die coater **200** (the Off Coat Position shown in FIG. **13**B). In certain embodiments, the fan remains on at all times to maintain a constant negative pressure. After a predetermined amount of time (or web distance) to obtain the correct skip length, the servo motor **17** associated with the device **10** rotates the device **10** back down below the slot die coater **200** to the On Coat Position. The cycle then repeats.

[0048] The ability of the web lifter/stabilizer device to guide and flatten a travelling web can be utilized in applications where web lifting is not required. In such applications, the device need not be rotatable.

[0049] FIG. **17** shows a representative embodiment of the fluid system and control elements in accordance with certain embodiments. In this embodiment, the system comprises a coating fluid reservoir **30**, pump **40**, bypass valve **63**, supply valve **60**, nozzle **70** and web lifter **15**. Optionally, a fluid displacement mechanism **90'** is included to alternatingly draw and replace a small volume of fluid through conduit **96**. A controller **210** is incorporated into the system, which is able to control the actions of the bypass valve **63**, the supply valve **60**, and web lifter/stabilizer **15**. In some embodiments, which utilize a fluid displacement mechanism, the controller **210** controls the actions of fluid displacement actuator drive **91**.

[0050] The controller **210** includes a processing unit which executes computer readable instructions, adapted to perform the actions described below. The processing unit may be a general purpose computing device, such as a microprocessor. Alternatively, it may be a specialized processing device, such as a programmable logic controller (PLC). The controller **210** also contains a storage element, which is used to store the instructions, as well as provide temporary storage for the processor's use. The storage element may utilize any memory technology, such as RAM, ROM, EEPROM, Flash ROM, NVRAM, or any other suitable technology. The controller **210** also includes an input device, such as a touchscreen, keyboard, or other suitable device. The input device is used to allow the operator to input a set of parameters or a profile which should be used by the controller **210**. This input device may also be referred to as a human machine interface or HMI. The controller **210** also has outputs adapted to control the valves and nozzle as described above. These outputs may be analog or digital in nature, and may provide a binary output (i.e. either on or off), or may provide a range of possible

outputs, such as an analog signal or a multi-bit digital output. Using these outputs, the controller **210** is able to control the opening and closing of bypass valve and supply valve **60**, as well as the speed at which these operations occur. Similarly, it can control the movement of the web lifter **15**, as well as the speed of that movement.

[0051] The valve actuators **51** and **61** driving valves **50** and **60**, respectively, and fluid displacement actuator **91** driving chamber are preferably servomotor drives having precise positioning capability at high travel speed. Preferably, the actuators **51** and **61** are capable of driving their respective valves through the travel range from open to closed and closed to open positions in less than 50 milliseconds. Similarly, actuator **91** is selected to expand volume chamber **90** in less than 50 milliseconds and return to the compressed position in less than milliseconds. Web lifter/stabilizer **15** is positioned by actuator **73**, preferably a servomotor having high speed positioning capability to complete the full cycle from on-coat position to the off-coat position and from off-coat position back to web coating-on position in less than 50 milliseconds.

[0052] To establish a profile of the thickness of one or more coated patches to be applied along a length of a sheet comprising a continuous web in the direction of web travel, the operator may enter the position on the sheet referenced to a starting position, and additional reference positions defined in terms of web travel distance for control of actuation of the various valves **50**, **60** and lifter/stabilizer **15**. These reference positions are initially determined from the desired lengths of coated and uncoated areas to be applied to the web to produce one or more coated patches of precise dimension along the direction of web movement with intervening segments of uncoated web having a second precise dimension along said web movement direction. These reference position parameters may also be adjusted depending on various criteria, such as the fluid rheology, and slot die setup.

[0053] The following describes an example in which the operator sets the parameters to produce coated patches of a precise desired length. Referring to the supply valve **60**, the operator may provide the "position at which the valve opens", "position at which the valve closes", or an intermediate "open" and "closed" positions wherein the valve is partially open or partially closed. In some embodiments, the operator may supply a set of positions and a corresponding indication of the state of the valve, such as 20% open, 40% open, etc. In some embodiments, the opening and closing of the valve **60** may follow a custom mathematical curve. For example, the mathematical curve may be a linear ramp, an exponential function, a step function, or a parabolic function, or any combination of the previous. Similar parameters may be used for the bypass valve **63**. In one embodiment, profiles are determined through a working knowledge of the coating being applied and by generating a corresponding timing diagram. The valve timing and open/close profiles are then refined through experimentation.

[0054] The movement of the lifter/stabilizer **15** can also be controlled by the controller **210**. In some embodiments, the lifter **15** is rotated by an actuator **73** to displace the web from the lips **72** of nozzle **70**. The operator may enter a reference position when the lifter/stabilizer **15** starts moving away from the lips **72**. The operator may also enter a reference position when the lifter/stabilizer moves toward the die lips. Subsequently, the speed of movement is automatically adjusted based on the line speed and web position relative to the slot die. As above, a graph of the position of lifter **15** vs. sheet position may be a simple linear ramp, an exponential function, or a parabolic function. This graph determines the speed of movement of the lifter **15**. In some embodiments, the operator may supply a set of reference positions and a corresponding indication of the state of the lifter, such as 20% away from the die lips, 40% away from the die lips, etc.

[0055] Similarly, the movement of the optional fluid displacement mechanism **90'** may be likewise programmed and controlled.

[0056] It is likely that certain combinations of parameters for the valves **50**, **60**, web lifter **15** and fluid displacement mechanism **90'** will be utilized frequently. Therefore, in lieu of entering all of the parameters for each component separately, the operator may create a "recipe", which is a predefined set of parameters which describe the operation of all of the components. At a later time, the operator can simply enter the name of the recipe, which conveys all of the associated details movement information to the processing unit. In some embodiments, the details of each recipe are stored in the storage element in the controller **210**. For example, a "recipe" may be stored that generates the coating pattern shown in FIG. **19**, while a second "recipe" generates the coating pattern shown in FIG. **21**. In addition, the recipe may be stored locally and control only the coated patch profiles, or it may be stored remotely as part of a larger global recipe that stores other variable conditions such as line speed, web tension, dryer settings, and settings for other equipment that is integrated to the coating line.

[0057] Using this controller, the operating characteristics of the various components can be programmed to create a wide range of coating profiles. For example, FIG. **18** shows the operation of the bypass valve **63**, the supply valve **60**, and the web lifter **15** which can be used to create the profile shown in FIG. **16**. The horizontal axis represents distance on the sheet. This profile assumes that the coating is applied for 200 mm, and then is not applied for 30 mm. This pattern is then repeated. The embodiments disclosed herein are not limited to this pattern. Indeed, the coated and uncoated portions can be as small as 1 mm and can be arbitrarily large.

[0058] The following embodiments utilize the reference position of the sheet along the direction of web travel to determine the actions of the various components. The position of the substrate materials is tracked by a high resolution encoder **220** attached to a roller shaft. In another embodiment, the encoder is coupled to a drive motor that represents web movement. Upon initial start of the coating operation, the length of web travel in relation to the location of die lips **72** is computed from encoder information and translated into terms of web reference position. The signals from encoder **220** are in communication via a data bus to the servo drive controls of servomotors **51**, **61**, **73** and **91** to carry out the respective positioning actions of valves **50**, **60**, web lifter **15** and fluid displacement chamber **90**, respectively. As is known to those skilled in the knowledge of application of servo drives, these positioning actions may be carried out at very high speed with excellent precision according to mathematically programmed cam action profiles defined by the user. Positioning actions of two or more actuators may be coordinated to obtain precise control of the patch location and coating thickness profile and are represented as timing diagrams.

[0059] FIG. **18** shows an example timing diagram wherein at reference position 199.5 mm, the bypass valve **63** begins to open, while the supply valve **60** begins to close. This opera-

tion is completed by reference position 200 mm, therefore the transition between the coating region and the uncoated region is very abrupt. This rapid transition tends to leave excessive coating in the nozzle **70**, which is unevenly applied when the supply valve **60** next opens at time **230** (see FIG. **16**). While the valves **50**, **60** are being actuated, the web lifter **15** is moved from its on-coat position to an off-coat position, away from the die lips **72**. This movement begins at reference position 199.5 mm and ends at reference position 200 mm. The coating is again applied at reference position 230 mm. In preparation for this application, the bypass valve **63** begins to close at reference position 229.5 mm. The bypass valve **63** is closed by reference position 230 mm. The supply valve **60** executes a similar profile going from the closed state to the open state beginning at position 229.5 mm and ending at position 230 mm. The web lifter is also moved into the on-coat position as well. This movement begins at reference position 229.5 mm and is completed by reference position 230 mm.

[0060] It should be noted that while the examples presented herein demonstrate the supply valve **60** and the bypass valve **63** operating in concert, this is not a requirement. In other words, these valves **50**, **60** are separate and their actuation may be controlled separately. In another embodiment, a three way valve may be employed, in which case, the actuation of these valves would be dependent on each other.

[0061] In some embodiments, particularly at higher coating speeds exceeding 5 meters per minute, a fluid displacement mechanism **90'** is preferably used as shown in FIG. **17**. In these embodiments, the fluid displacement mechanism **90'** may be a chamber **90** having a changeable volume and a single fluid connection **96**, such that when the volume increases, material is drawn away from the nozzle lips **72** into cavity **71**, through conduit **96** and into the chamber. Conversely, when the volume decreases, material in the chamber **90** is forced back through conduit **96** into the nozzle cavity **71** and into nozzle lips **72** and is applied to the sheet. In the profile shown in FIG. **18**, the fluid displacement chamber **90** of FIG. **17** is preferably driven by a linear actuator **91** which begins to expand the volume of chamber **90** at reference position 199.5 mm and is fully expanded by reference position 200 mm. When the material is to be applied again, the fluid displacement chamber **90** is decreased in volume by actuator **91** at reference position 229.5 mm. This chamber contraction is complete at reference position 230 mm.

[0062] Referring to FIG. **23**, the fluid displacement mechanism **90'** may be comprised of a sealed bellows or diaphragm element to form chamber **90** which is attached to stationary frame **97** which supports both the chamber **90** and actuator **91**. Actuator **91** is mechanically connected to the diaphragm element of chamber **90** by a mechanical coupling **92** to move the position of the diaphragm inward to chamber **90** to reduce the internal volume, or outward from chamber **90** to increase the internal volume. Fluid conduit **96** is in fluid communication with the internal volume of chamber **90** and is also in fluid communication with the fluid system of FIG. **17**. Prior to operation, the chamber **90** and conduit **96** are filled with coating fluid, coating solvent, or other suitable fluid media to prime the fluid displacement mechanism. In operation, the actuation distance "Y" is controlled by actuator **91** in accordance with the instructions from controller **210** of FIG. **17**. In order to allow fast actuation of the fluid displacement action, the design of the diaphragm element of chamber **90** is to be made with consideration of minimizing the actuation distance while obtaining the desired change in internal volume in the expanded state versus the volume in the contracted state. Travel distance is preferably less than 6 mm for a response speed less than 50 milliseconds. The diaphragm may be selected from commonly available elastomeric materials, optionally reinforced with fabric strands, and sealed to a rigid shell or bowl to form the variable volume chamber **90**. In a preferred embodiment, the volume chamber is constructed as a metal bellows of corrosion and solvent resistant material such as T304 stainless steel. A single bellows type is preferred for effective priming of the chamber to avoid inclusion of air bubbles during operation. The forgoing descriptions of the variable volume chamber **90** are meant to be exemplary as numerous designs of bellows and diaphragm elements are known to those skilled in the art and may be applied to meet the requirements for minimal actuation distance, fast speed, and volume displacement.

[0063] It is to be appreciated that the coating fluid contained in chamber **90**, conduit **95**, cavity **71** and die lips **72** undergoes a reversal in flow direction for each actuation by actuator **91** such that fluid is temporarily displaced from the exit of die lips **72** into the die cavity **71** and into fluid displacement chamber **90** when expanded and then returned via the same path to the die lips **72** when the chamber **90** is compressed. Therefore, coating fluid is not withdrawn from the process to accommodate the control of the deposition of fluid on the web to make discrete coated patches of precise dimension.

[0064] Of course, other coating profiles may be desired. FIG. **19** shows a coating profile where the leading edge **540** is much more even than that of FIG. **16**. Trailing edge **545** is also more even and abrupt. To create this profile, the timing and speed of the various components is modified from that explained in conjunction with FIG. **18**. A representative timing diagram that may be used to create this coating profile is shown in FIG. **20**.

[0065] In this profile, the supply valve **60** and bypass valve **63** are controlled so as to begin closing earlier. In this profile, these valves **50**, **60** begin transitioning by reference position 195 mm and are completely transitioned by reference position 196 mm. The web lifter **15** is not moved until reference position 199.5 mm, and is quickly moved away from the die lips **72**. When the coating is to be applied again, the valves begin transitioning by reference position 228 mm and are completely transitioned by reference position 229.5 mm. The web lifter **15** is moved toward the die lips **15**, starting at reference position 229 mm and is completed by reference position 230 mm. In those embodiments where a fluid displacement mechanism **90'** is utilized, the fluid displacement chamber **90** begins to expand at reference position 199 mm and is fully expanded by position 200 mm. Before the coating is applied again at position 230 mm, the fluid displacement chamber **90** begins to contract at reference position 229 mm. Its contraction is completed at reference position 230 mm.

[0066] FIG. **21** shows another coating profile that can be created using embodiments disclosed herein. In this embodiment, the leading edge **562** is ramped to its maximum value. Similarly, the trailing **565** is tapered, rather than abrupt. FIG. **22** shows a timing diagram that may be used to create this profile. In this embodiment, the valves **50**, **60** open and close more slowly, so as to create the tapered leading edge **562** and trailing edge **565**.

[0067] It should be noted that the representative timing diagrams described herein are not the only timing diagrams that can be used to create the desired coating profiles. In

addition, other coating profiles are possible and can be created by varying the operation of the valves, nozzle and fluid displacement mechanism.

[0068] The use of a controller to control the actuation of the valves **50**, **60** and the movement of the web lifter **15** may allow the elimination of a fluid displacement mechanism **90'**, particularly at coating speeds below 5 meters per minute. For example, by precisely controlling the position and the speed at which the valves turn on and off, the amount of excess coating that remains in the nozzle **70** can be reduced.

[0069] In the examples above, the system is programmed by referencing all actuations to position. In another words, the system receives input wherein an absolute position and a desired action are presented together. However, other points of references may be used to indicate when an action should take place. For example, the actions of the valves **50**, **60** and the web lifter **15** may be referenced to the turn-on and turn-off positions. For example, the user may specify that the coating should be applied for 200 mm, followed by a 30 mm uncoated region. The actuation of the valves **50**, **60** may be input as relative offsets from these turn-on and turn-off positions. Referring to FIG. **20**, the valves would be programmed to being transitioning at position offset −6 mm (200 mm-194 mm), and would complete this transition at position offset −4 mm. Similarly, the next transition of the valves would be referenced to the turn-on position (230 mm). This method of conveying information to the controller may be extremely valuable, as it allows the same coating profiles to be used with different length regions, by simply modifying the turn-on and turn-off locations, without modification to the other parameters.

[0070] Another advantage of the position based reference system described herein is that the controller may automatically compensate for changes in coating speed. For example, if the speed of the roller **315** is changed, the controller can determine that the times associated with each actuation are different and can compensate for this change and generate the same coating profile as was done previously.

[0071] The controller can also be used to apply a coating to the opposite side of a previously coated sheet as well. In a preferred embodiment shown in FIG. **17**, a web **310** is coated on a first side by a first coating nozzle **70***a* having a fluid delivery system **301***a* and web lifter **15***a* operating as previously described to coat patches of a desired length, spacing and thickness profile in the direction of web travel. The web path is then re-directed by rollers **314** and **315** by turning on the uncoated side of the web in order to present the web in the preferred orientation at a second coating nozzle **70**. The second side of the web **310** is then coated as previously described. In some embodiments, it is imperative that the coating patches on the first side are exactly aligned with those created on the opposite side. In other embodiments, it may be desirable to advance or delay the application of coating relative to the pattern on the first side. Using the input device, the operator can program the registration of the opposite side. In some embodiments, this is achieved by programming the start and stop positions to have a certain relationship to the previously applied coatings on the first side. In other embodiments, the operator enters the desired offset (i.e. 0 indicates alignment, positive values indicate a delay and negative values indicate an advancement). In this embodiment, the system may contain a vision system **230** as shown in FIG. **17** positioned to view the previously coated patches and capable of detecting the transition between an uncoated region and a coated region. Once this web position point is determined, the controller can use the speed of the roller **15** as computed from the signal of encoder **220** or a suitable roller drive information signal to determine the time at which coating should be applied to the second side. The vision system **230** may be comprised of a contrast sensor in data communication with controller **210** and with servo drives controlling actuators **51**, **61**, **71** and **91**. A number of such vision systems are available in the industrial controls and sensors market and may be selected to provide fast response speed in order to report the detected transitions from coated to uncoated locations on the moving web and from uncoated to coated locations in order to effect timely action by controller **210** and the servo drives controlling servomotors **51**, **61**, **71**, and **91**. Response time for the contrast sensor device is preferably less than 100 microseconds. In embodiments including the vision system for registration of patches, the controller **210** must be capable of processing all mathematical operations to initiate the actuator and drive motor actions at a frequency at least 2 times the rate at which the desired coated patch sequences (coated and uncoated lengths) are passing by the sensor **230**.

[0072] Another, more preferred type of registration controller not only senses the edge of the coating patch before it arrives at the coating head for alignment of the coating patches, but also has a second set of sensors **231** and **232** that measure the alignment of the two coated patches and compares the measured value against the target value and automatically applies a correction to the registration distance of the subsequent coated patch. This type of system provides for more robust operation by providing both feed-forward and feed-back control of the coating registration process and can automatically compensate for the time lags associated with communication delays among the various control systems used in the entire coating device. Furthermore, this preferred type of registration system improves the production yield by reducing the number of defects caused during changes in the coating line speed, or tension changes due to splices, for example.

[0073] Another benefit from the preferred coating registration method is that the coating patches are automatically measured and the measurement data can subsequently be recorded into a data logging system for statistical analysis and quality control.

[0074] The present disclosure is not to be limited in scope by the specific embodiments described herein. Indeed, other various embodiments of and modifications to the present disclosure, in addition to those described herein, will be apparent to those of ordinary skill in the art from the foregoing description and accompanying drawings. Thus, such other embodiments and modifications are intended to fall within the scope of the present disclosure. Furthermore, although the present disclosure has been described herein in the context of a particular implementation in a particular environment for a particular purpose, those of ordinary skill in the art will recognize that its usefulness is not limited thereto and that the present disclosure may be beneficially implemented in any number of environments for any number of purposes. Accordingly, the claims set forth below should be construed in view of the full breadth and spirit of the present disclosure as described herein.

What is claimed is:

1. Web lifter or stabilizer device for lifting or stabilizing a travelling web, comprising a body having a first portion defining a leading edge of said device, and a second portion defin-

ing a trailing edge of said device, said first portion being spaced from said second portion so as to define an air entry slot between them for the entry of air upon the application of negative pressure to said body; a vacuum source in fluid communication with said body for receiving said air that enters said slot; said body being rotatable between a first position in which said web travels in an undeflected state, and a second position in which said web is deflected by said body so as to travel in a deflected state.

2. The web lifter or stabilizer of claim **1**, further comprising a shaft coupled to said body, wherein rotation of said shaft causes rotation of said body between said first and second positions.

3. The web lifter or stabilizer of claim **1**, wherein said first portion comprises a surface polished to a mirror finish to maintain a flat web through frictional forces and to not mark or crease the thin foil web.

4. The web lifter or stabilizer of claim **1**, wherein said first portion comprises a surface having an anti-friction coating thereon.

5. The web lifter or stabilizer of claim **1**, wherein said first portion is machine finished.

6. The web lifter or stabilizer of claim **1**, wherein said body has a plurality of slots that provide fluid communication between said air entry slot and a vacuum reservoir.

7. The web lifter or stabilizer of claim **1**, wherein said body has one or more hollow shafts that provide fluid communication between said air entry slot and a vacuum source.

8. The web lifter or stabilizer of claim **1**, wherein said air entry slot is downstream, in the direction of web travel, of the leading edge of said device.

9. A web lifter or stabilizer assembly for lifting or stabilizing a travelling web, comprising a body having a first portion defining a leading edge of said device, and a second portion defining a trailing edge of said device, said first portion being spaced from said second portion so as to define an air entry slot between them for the entry of air upon the application of negative pressure to said body; a vacuum source in fluid communication with said body for receiving said air that enters said slot; said body being rotatable between a first position in which said web travels in an undeflected state, and a second position in which said web is deflected by said body so as to travel in a deflected state; and a controller for moving said web lifter of stabilizer.

10. A method of stabilizing and deflecting a traveling web during a skip coating operation, comprising:

providing a coater for intermittently applying a coating to said web;

providing a web lifter device upstream of said coater, in the direction opposite of web travel, in a first position, said web lifter device comprising a body having a first portion defining a leading edge of said device, and a second portion defining a trailing edge of said device, said first portion being spaced from said second portion so as to define an air entry slot between them for the entry of air upon the application of negative pressure to said body; and a vacuum source in fluid communication with said body for receiving said air that enters said slot;

applying negative pressure to said body, causing air to enter said air entry slot and flow to said vacuum chamber; then rotating said body from said first position in a direction toward said web to deflect said web away from said coater to form a coating gap on said web;

rotating said body back to said first position; and

maintaining negative pressure to said body.

11. The method of claim **10**, wherein said body is rotated with a controller.

12. A system for applying a coating to a material, travelling in a path, comprising:

a nozzle to apply said coating;

a supply valve in communication with said nozzle to allow the flow of coating to said nozzle;

a bypass valve to direct the flow of coating away from said nozzle;

a fluid displacement mechanism to draw coating away from said nozzle after said supply valve has been closed, wherein said fluid displacement mechanism comprises a chamber having a changeable volume; and

an actuator positioned such that movement of said actuator causes a change in said volume;

a web lifter moveable to deflect said material; and

a controller in communication with said supply valve, said bypass valve, said actuator, said nozzle and said web lifter so as to control the application of said coating to said coating.

13. A method of applying a coating to a web using a system comprising a supply valve, a bypass valve, a nozzle, a web lifter and a controller to control said supply valve, said bypass valve and said nozzle, said method comprising:

inputting to said controller the reference positions on said web where said supply valve is to open and close;

inputting to said controller the reference positions on said web where said bypass valve is to open and close;

inputting to said controller the reference positions on said web where said web lifter is to be actuated to move said web toward and way from said nozzle;

moving said web past said nozzle;

tracking the position of said web; and

using said controller to control said supply valve, said bypass valve, said nozzle and said web lifter based on said inputted reference positions to deposit said coating on said web.

14. Web stabilizer device for guiding and flattening the position of a travelling web, comprising a body having a first portion defining a leading edge of said device, and a second portion defining a trailing edge of said device, said first portion being spaced from said second portion so as to define an air entry slot between them for the entry of air upon the application of negative pressure to said body; and a vacuum source in fluid communication with said body for receiving said air that enters said slot.

* * * * *