[19] China National Intellectual Property Administration

[51] Int. Cl.

[12] Utility Model Patent Specification

Patent No. ZL 200720184531.6

F04C 5/00(2006.01)
F04B 47/02(2006.01)
E21B 43/00(2006.01)

[45] Grant Announcement Date: 2008-9-24

[11] Grant Announcement No.: CN 201121583Y

[22] Application Date: 2007-10-19

[21] Application No.: 200720184531.6

[73] Patentee: Ningbo Zhengding Petroleum Machinery Equipment Manufacturing Co., Ltd.

Address: Lujia, Dandong Street, Dancheng, Xiangshan County, Zhejiang Province 315709

[72] Inventor Zheng Jinqi

[74] Patent Agency: Ningbo Tianyi Patent Agency Co., Ltd.

Agent: Liu Saiyun

Claims: 1 page Specification: 2 pages
Attached Drawings: 1 page

[54] Title of the Utility Model

EXTENSION-TYPE FULL-METAL SINGLE-SCREW OIL WELL PUMP

[57] Abstract

The utility model introduces an extension-type full-metal single-screw oil well pump and relates to a full-metal lengthened-type oil well pump applied to oil recovery in oilfields. The extension-type full-metal single-screw oil well pump features a stator connected to both an upper joint and a lower joint, with a rotor that fits into the stator with clearance. The stator is composed of several interconnected segments, and at the connection points, the ends of the upper and lower segments of the stator are equipped with a stator connecting sleeve to facilitate connection. The stator, rotor and stator connecting sleeve are made of special metal steel and undergo nitriding treatment. This process enhances the oil well pump's wear resistance, corrosion resistance, and high-temperature tolerance (exceeding 350°C), effectively addressing the challenges associated with the thermal recovery of heavy viscous oil and deep well operations. The pump is designed for durability, making it less prone to damage and extending its service life. It is well-suited for high-speed production operations, prolongs the intervals between pump inspections, and reduces operational costs in oilfields. As a result, it represents a promising solution in the market for oil recovery pumps.

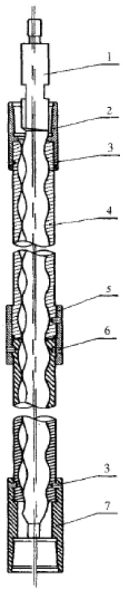

1. An extension-type full-metal single-screw oil well pump, comprising a stator (4) connected to both an upper joint (2) and a lower joint (7), with a rotor (1) that fits into the stator with clearance, characterized in that the stator (4) is composed of several interconnected segments, and at the connection points, the ends of the upper and lower segments of the stator are equipped with a stator connecting sleeve (5) to facilitate connection.

2. The extension-type full-metal single-screw oil well pump according to Claim 1, characterized in that the upper joint (2) and the lower joint (7) are threadedly connected to the stator (4), and an anti-dislodgement pin (3) is installed between them.

3. The extension-type full-metal single-screw oil well pump according to Claim 1, characterized in that the connection between the upper and lower segments of the stator (4) and the stator connecting sleeve (5) is also threaded, with an anti-loosening locating pin (6) positioned between them.

4. The extension-type full-metal single-screw oil well pump according to Claim 1, characterized in that the connection of the upper and lower segments of the stator (4) is formed by the matching and interlocking of the shoulder (8) and shoulder hole (9).

5. The extension-type full-metal single-screw oil well pump according to Claim 4, characterized in that a wear-resistant copper gasket is placed between the shoulder (8) and the shoulder hole (9) of the upper and lower segments of the stator (4).

6. The extension-type full-metal single-screw oil well pump according to any one of Claims 1 to 5, characterized in that the stator (4), rotor (1) and stator connecting sleeve (5) are made of special metal steel, with both the inner and outer surface layers treated with nitriding technique.

EXTENSION-TYPE FULL-METAL SINGLE-SCREW OIL WELL PUMP

TECHNICAL FIELD

The utility model relates to a full-metal screw pump applied to oil recovery in oilfields, and in particular, to an extension-type full-metal single-screw oil well pump.

BACKGROUND

Since China began introducing and developing oil recovery technology using ground-driven single-screw oil well pumps in the 1980s, practical experience has demonstrated that these pumps are highly valued by various oilfields due to their low initial investments, simple surface device structures, ease of installation, compact footprint, and high efficiency and have undergone rapid development. However, a significant limitation arises from the pump's main component, the stator, which is manufactured through injection molding within a steel sleeve using nitrile rubber as a bushing. While this rubber bushing can perform under extremely low viscosity gas lubrication conditions, it has a temperature tolerance of only around 150°C. When the pump operates at steam temperatures of 200°C or higher or in heavy viscous oil thermal recovery fields, overheating can cause the stator rubber to degrade and burn, resulting in swelling, thermal expansion, and even detachment from the steel stator sleeve, ultimately reducing the pump's lifespan. Once damage occurs, the pipe string must be run and pulled, increasing inspection costs and significantly hindering the technology's promotion and application. Even improvements in synthetic rubber performance have not yielded significant benefits. As a result, the development of a full-metal single-screw oil well pump has become a promising direction. A Chinese patent document CN2448956Y titled "FULL-METAL SCREW PUMP" has provided inspiration in this regard. However, as the processing technology cannot keep up with demand, only a 7-stage pump can currently be produced, which is only suitable for oil recovery operations at depth of about 200 meters. In contrast, most oilfields in China have well depths exceeding 800 meters, with some reaching depths of 6,000 to 7,000 meters. Therefore, it is essential to address the challenges associated with the thermal recovery of heavy viscous oil and deep well operations.

SUMMARY

The inventive purpose of the utility model is to address the challenges presented by the existing technology by providing an extension-type full-metal single-screw oil well pump that solves both the thermal recovery issues associated with heavy viscous oil and the operational difficulties encountered in deep well operations.

The inventive purpose of the utility model is achieved through the following technical solutions:

An extension-type full-metal single-screw oil well pump, comprising a stator connected to both an upper joint and a lower joint, with a rotor that fits into the stator with clearance, characterized in that the stator is composed of several interconnected segments, and at the connection points, the ends of the upper and lower segments of the stator are equipped with a stator connecting sleeve to facilitate connection.

The upper joint and the lower joint are threadedly connected to the stator, and an anti-dislodgement pin is installed between them.

The connection between the upper and lower segments of the stator and the stator connecting sleeve is also threaded, with an anti-loosening locating pin positioned between them.

The connection between the upper and lower segments of the stator is formed by the matching and interlocking of the shoulder and shoulder hole.

A wear-resistant copper gasket is placed between the shoulder and the shoulder hole of the upper and lower segments of the stator.

The stator, the rotor, and the stator connecting sleeve are all made of special metal steel, with both the inner and outer surface layers treated with nitriding technique.

The improved new product is made of a special metal material, capable of withstanding temperatures above 350°C. Additionally, a unique surface nitriding treatment enhances its wear resistance and corrosion resistance, addressing the thermal recovery issues of heavy viscous oil. At the same time, through the structural improvement of multiple interconnected segments, the pump can be customized to provide extended models suited for different well depths and displacements, solving the well depth operation challenges in China. Field tests conducted by supporting enterprises from Xinjiang Oilfield and Liaohe Oilfield have demonstrated that the pump is highly durable, with a long service life, suitable for high-speed production operations, prolongs the intervals between pump inspections, and reduces operational costs in oilfields. These advantages make it a promising product with strong market potential.

BRIEF DESCRIPTION OF DRAWINGS

FIG. 1 is a schematic diagram of the structure of the utility model.

FIG. 2 is an enlarged view of the connection between the upper and lower segments of the stator.

DETAILED DESCRIPTION OF EMBODIMENTS

The following detailed description of the utility model will be provided with reference to the accompanying drawings.

As shown in FIG. 1 and FIG. 2, the extension-type full-metal single-screw oil well pump features a stator 4, which is composed of multiple segments to achieve the desired length suitable for deep well operations. The outer surfaces of the upper and lower ends of the stator segments are machined with threads, and matching shoulder 8 and shoulder hole 9 are formed at the connection points. Before assembly, wear-resistant copper gaskets (not shown in the figure) are inserted into the shoulder hole to serve as a sealing function. After assembly, the upper and lower stator segments are connected by a stator connecting sleeve 5 through a threaded connection, reinforced by anti-loosening locating pin 6. Since the stator cavities are spiral, a specific pitch size is selected based on the operational conditions, such as different well depths, displacements, and rotor speeds. The spiral surfaces are machined using specialized tooling equipment, ensuring continuity of the spiral cavity surface after assembly of the upper and lower stator segments. Inside the stator 4, there is a rotor 1 with a clearance fit. The rotor features a single screw with the same pitch as the stator, with a clearance gap between them ranging from 0 mm to 0.5 mm, with an optimal clearance of 0.01 to 0.4 mm.

After assembly of the stator segments and rotor, the top end is threadedly connected to the upper joint 2 and reinforced with anti-dislodgement pin 3. The rotor is then connected to the oil extraction rod (not shown in the figure), driven by a drive mechanism, which provides the rotational power for the rotor. The stator is then connected to the oil pipe (not shown in the figure), completing the top-end connection. The bottom end is similarly threadedly connected to the lower joint 7 and reinforced with anti-dislodgement pin 3, with the lower joint connected to the screen pipe (not shown in the figure).

The stator 4, rotor 1, and stator connecting sleeve 5 are all made of special metal steel, and after nitriding treatment, both the inner and outer surfaces are coated with a nitriding layer, achieving a hardness of up to HRc67. This treatment enhances the wear resistance, corrosion resistance, and extends the service life of the components.

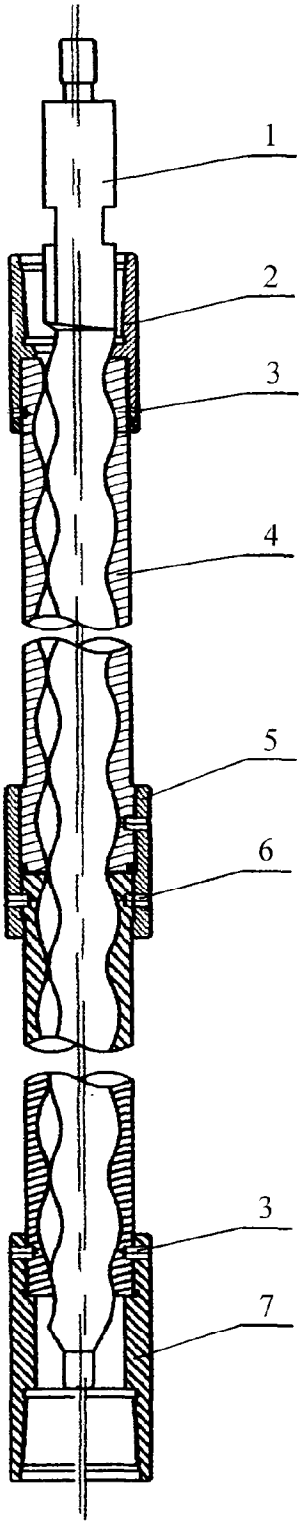

FIG. 1

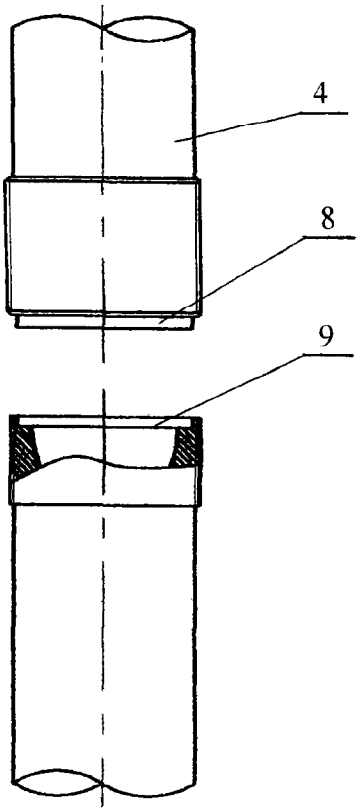

FIG. 2