US010676992B2

(12) **United States Patent**
Pearson et al.

(10) **Patent No.: US 10,676,992 B2**
(45) **Date of Patent: Jun. 9, 2020**

(54) **DOWNHOLE TOOLS WITH PROGRESSIVE CAVITY SECTIONS, AND RELATED METHODS OF USE AND ASSEMBLY**

(71) Applicant: **InFocus Energy Services Inc.**, Edmonton (CA)

(72) Inventors: **Allan Pearson**, Edmonton (CA); **Mark Luchak**, Edmonton (CA); **Oxana Scheming**, Edmonton (CA); **Geoff Samuel**, Edmonton (CA); **Matt Osatchuk**, Edmonton (CA); **Erin Venables**, Edmonton (CA); **Peter Kjellbotn**, Edmonton (CA)

(73) Assignee: **Infocus Energy Services Inc.**, Edmonton, Alberta

(*) Notice: Subject to any disclaimer, the term of this patent is extended or adjusted under 35 U.S.C. 154(b) by 13 days.

(21) Appl. No.: **15/811,664**

(22) Filed: **Nov. 13, 2017**

(65) **Prior Publication Data**

US 2018/0274297 A1 Sep. 27, 2018

(30) **Foreign Application Priority Data**

Mar. 22, 2017 (CA) 2961629

(51) **Int. Cl.**
E21B 4/02 (2006.01)
E21B 10/42 (2006.01)
(Continued)

(52) **U.S. Cl.**
CPC ***E21B 4/02*** (2013.01); ***E21B 4/003*** (2013.01); ***E21B 7/28*** (2013.01); ***E21B 10/42*** (2013.01);
(Continued)

(58) **Field of Classification Search**
CPC . E21B 4/02; E21B 10/42; E21B 4/003; E21B 17/1078; E21B 7/28; E21B 10/26; F03C 2/08; B23H 2200/00
See application file for complete search history.

(56) **References Cited**

U.S. PATENT DOCUMENTS

1,892,217 A 12/1932 Moineau
2,084,096 A 6/1937 Everett
(Continued)

FOREIGN PATENT DOCUMENTS

CA 2393754 6/2001
CA 2543423 5/2005
(Continued)

OTHER PUBLICATIONS

"Adjustable Bent Housing", Challenger Downhole Tools Inc, accessed online at <<http://challengerdownhole.com/downhole-tool-products/adjustable-bent-housingi>>, at least as early as Mar. 10, 2017 (1 page).

(Continued)

Primary Examiner — Wei Wang
(74) *Attorney, Agent, or Firm* — Robert A. Nissen

(57) **ABSTRACT**

Various downhole tools, such as drilling motors, drilling tools, reamer tools, casing reamer shoes, and related methods of installation, assembly and use. Casing reamer shoes and drilling reamers or motors may have internal impellers, progressive cavity pumps, hollow rotors and other parts, universal joints, and other features. A progressive cavity section may have a rotor and a stator. Rotor contacting surfaces of the stator, and stator contacting surfaces of the rotor, may be rigid during use. The stator contacting surfaces and the rotor contacting surfaces may be made of metal. After the casing is run, the casing is cemented and the reamer shoe drilled out.

19 Claims, 33 Drawing Sheets

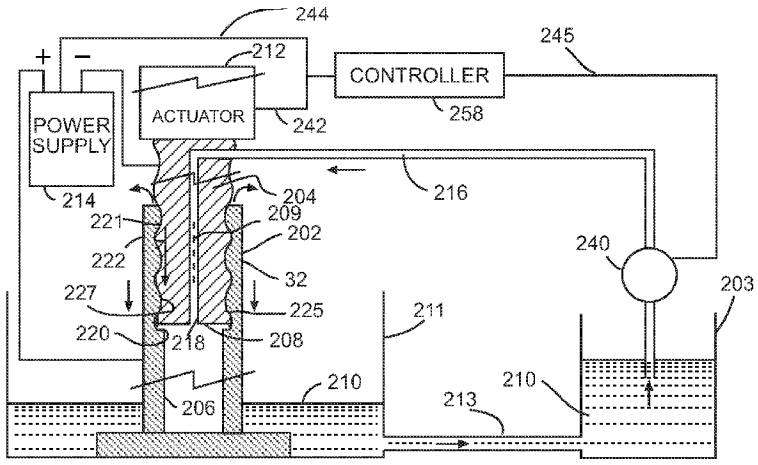

(51) **Int. Cl.**

E21B 4/00	(2006.01)
F03C 2/08	(2006.01)
E21B 17/10	(2006.01)
E21B 7/28	(2006.01)
E21B 10/26	(2006.01)

(52) **U.S. Cl.**
CPC ***E21B 17/1078*** (2013.01); ***F03C 2/08*** (2013.01); *B23H 2200/00* (2013.01); *E21B 10/26* (2013.01)

(56) **References Cited**

U.S. PATENT DOCUMENTS

2,753,941	A	7/1956	Hebard	
3,493,165	A	2/1970	Schonfeld	
3,511,539	A	5/1970	Schonfeld	
3,732,143	A	5/1973	joosse	
4,227,584	A	10/1980	Driver	
4,576,242	A	3/1986	Mundell	
4,616,719	A	10/1986	Dismukes	
4,721,172	A	1/1988	Brett	
4,764,094	A	8/1988	Baldenko et al.	
5,098,258	A	3/1992	Barnetche-Gonzalez	
5,171,138	A	12/1992	Forrest	
5,197,553	A	3/1993	Leturno	
5,221,197	A	6/1993	Kochnev et al.	
5,267,905	A	12/1993	Wenzel	
5,343,966	A	9/1994	Wenzel	
5,518,379	A	5/1996	Harris	
5,704,838	A	1/1998	Teale	
5,785,509	A	7/1998	Harris	
5,899,281	A	5/1999	Gynz-Rekowski	
6,062,326	A	5/2000	Strong et al.	
6,203,435	B1	3/2001	Falgout	
6,241,494	B1	6/2001	Pafitis et al.	
6,394,193	B1	5/2002	Askew	
6,401,820	B1	6/2002	Kirk et al.	
6,427,787	B1	8/2002	Jager	
6,446,725	B2	9/2002	Cabot	
6,554,083	B1	4/2003	Kerstetter	
6,896,075	B2	5/2005	Haugen et al.	
6,944,935	B2	9/2005	Hache	
6,949,025	B1	9/2005	Kraus	
6,983,811	B2	1/2006	Wardley	
7,096,982	B2	8/2006	McKay	
7,100,713	B2	9/2006	Tulloch	
7,159,668	B2	1/2007	Herrera	
7,186,182	B2	3/2007	Wenzel	
7,192,260	B2 *	3/2007	Lievestro	B23H 3/00 205/651
7,216,729	B2	5/2007	Syed et al.	
7,243,739	B2	7/2007	Rankin	
7,275,605	B2	10/2007	smith	
7,287,609	B2	10/2007	Runia	
7,334,649	B2	2/2008	Chen et al.	
7,378,769	B2	5/2008	Head	
7,395,882	B2	7/2008	Oldham	
7,396,220	B2	7/2008	Delpassand	
7,504,752	B2	3/2009	head	
7,624,819	B1	12/2009	Leblanc	
7,735,584	B2	6/2010	Purcell	
7,793,717	B2	9/2010	Davison	
7,823,657	B2	11/2010	Zeni	
7,836,973	B2	11/2010	Belcher et al.	
7,849,927	B2	12/2010	Herrera	
7,857,052	B2	12/2010	Giroux	
7,874,368	B2	1/2011	Blaquiere	
7,896,110	B2	3/2011	Bain	
7,909,117	B2	3/2011	Steenwyk	
7,938,204	B2	5/2011	Buske	
7,963,321	B2	6/2011	Kutac	
8,033,917	B2	10/2011	Prill	
8,074,742	B2	12/2011	Davis	
8,109,746	B2	2/2012	Guidry	
8,147,228	B2	4/2012	Guidry	
8,201,643	B2	6/2012	Soby et al.	
8,205,689	B2	6/2012	Radford	
8,295,665	B2	10/2012	Herbst	
8,342,970	B2	1/2013	Altimas	
8,870,666	B1	11/2014	Leger	
8,888,474	B2	11/2014	Hohl	
8,899,354	B1	12/2014	Comeau	
8,900,062	B2	12/2014	Nicol-Seto	
8,967,985	B2	3/2015	Coghlan	
9,091,264	B2	7/2015	Hohl	
9,115,540	B1	8/2015	Williams	
9,127,508	B2	9/2015	Taylor	
9,194,208	B2	11/2015	Schultz	
9,206,647	B2	12/2015	Prill	
9,334,691	B2	5/2016	Jarvis	
9,347,269	B2	5/2016	Marchand	
9,393,648	B2	7/2016	Underwood	
9,404,527	B2	8/2016	Marchand	
9,534,638	B2	1/2017	Marchand	
9,587,436	B2	3/2017	Perry	
9,617,790	B2	4/2017	Samuel	
9,695,638	B2	7/2017	Murray	
9,784,269	B2	10/2017	Lehr	
10,161,187	B2	12/2018	Gawski	
10,221,657	B2	3/2019	Gosselin	
10,233,926	B2	3/2019	Akbari	
10,301,876	B2	5/2019	Savage	
10,309,395	B2	6/2019	Ramier	
10,358,913	B2	7/2019	Richards	
2005/0089429	A1	4/2005	Delpassand	
2005/0118040	A1	6/2005	Zitka	
2005/0133426	A1	9/2005	Smith	
2010/0006342	A1 *	1/2010	Froehlich	E21B 4/02 175/107
2010/0032170	A1	2/2010	Howett et al.	
2010/0038142	A1 *	2/2010	Snyder	E21B 4/02 175/107
2011/0116961	A1	5/2011	Akbari	
2011/0243774	A1 *	10/2011	Underwood	F04C 13/008 418/48
2012/0168228	A1	7/2012	Giroux	
2013/0052067	A1	2/2013	Hohl	
2016/0168912	A1 *	6/2016	Mitchell	E21B 17/14 175/107
2016/0194917	A1	7/2016	Alali	
2017/0306700	A1	10/2017	Hohl	
2018/0066654	A1	3/2018	Cariveau	
2018/0258701	A1	9/2018	Saurer	
2018/0266181	A1	9/2018	Gawski	
2018/0274330	A1	9/2018	Sim	
2019/0024459	A1	1/2019	Sicilian	
2019/0145374	A1	5/2019	Parhar	

FOREIGN PATENT DOCUMENTS

CA	2659476	2/2008
CA	2738830	4/2010
DE	10132972	6/2002
FR	2349729	11/1977
GB	2375555	11/2002

OTHER PUBLICATIONS

"Downhole Mud Motors", accessed at <<https://sites.google.com/site/directionaldrillingclub/downhole-mud-motors>> (6 pages), available at least as early as Mar. 20, 2017.

Machine translation of FR2349729 obtained from espacenet.com (5 pages).

"Spincat SC-287 Swivel", StoneAge Waterblast Tools, SAPATENTS.COM, available at least as early as Mar. 20, 2017, (2 pages).

"The Stubby PDC Drillable", Fill Movers Inc., www.fillmovers.com, available at least as early as Mar. 20, 2017 (2 pages).

"Turbine Technology—The secrets Inside", Deep Casing Tools, accessed online at http://www.deepcasingtools.com/technology#turbocaserexpress, available at least as early as Mar. 20, 2017 (4 pages).

(56) **References Cited**

OTHER PUBLICATIONS

"Drilling Motor Handbook", 2015 Edition, Toro Downhole Tools, torotools.com (38 pages).
"Turborunner", Deep Casing Tools, accessed online at http://www.deepcasingtools.com/technology/turborunner, available at least as early as Mar. 20, 2017 (7 pages).
"Turborunner Tool Data Sheet", Deep Casing Tools, Sep. 17, 2015 (1 page).

* cited by examiner

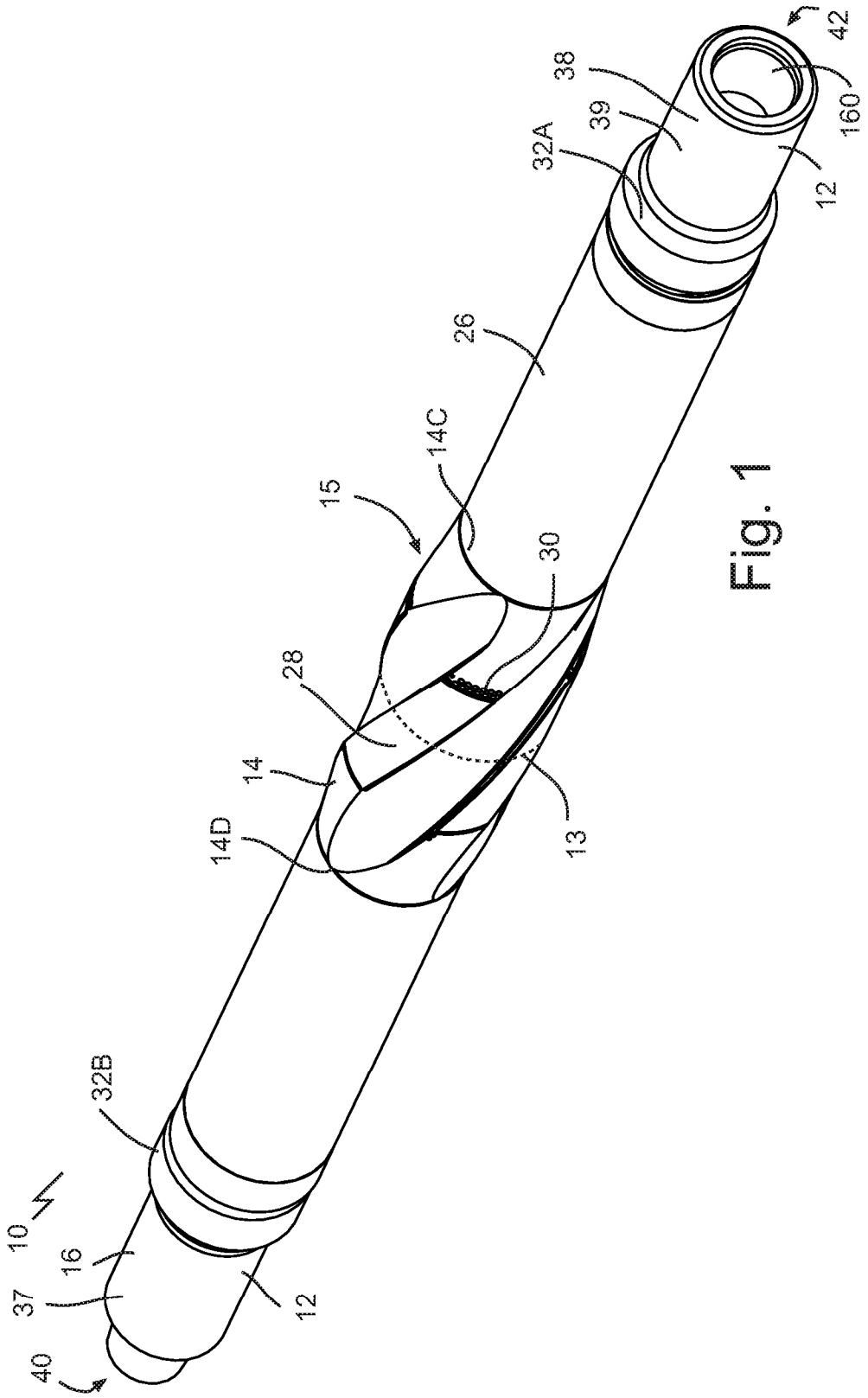

Fig. 1

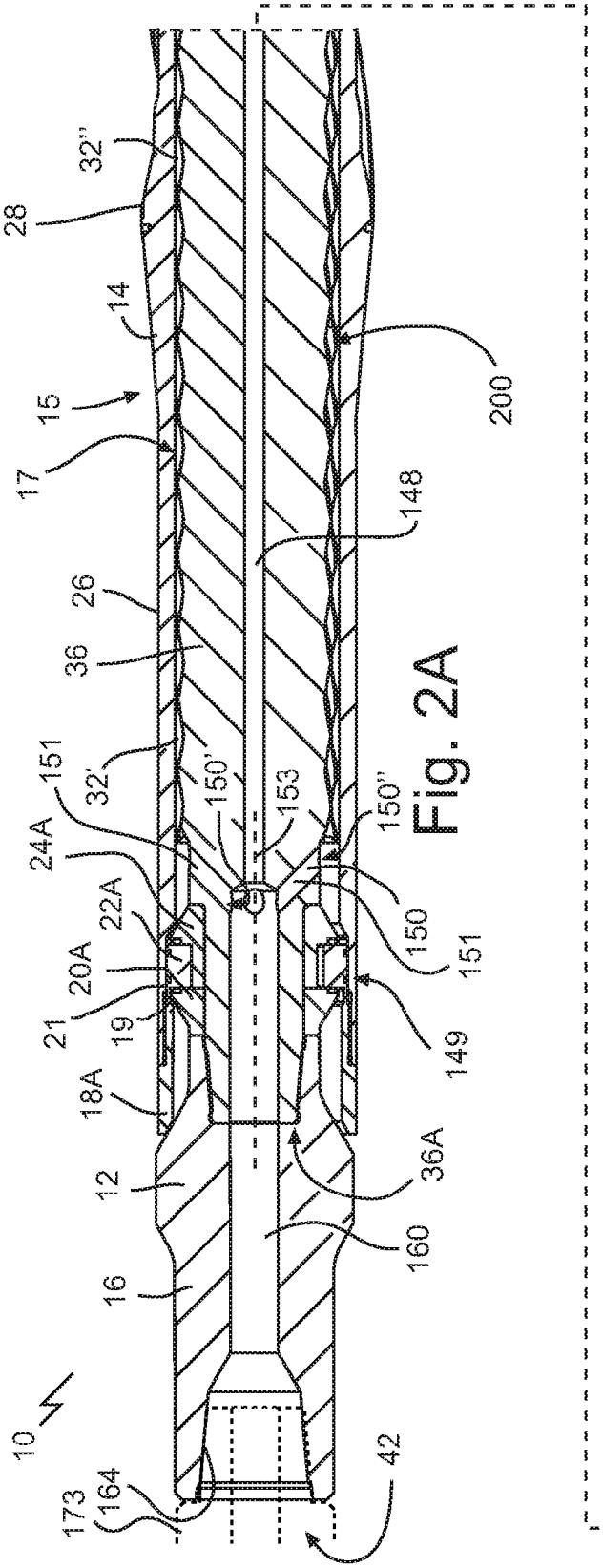
10
12
14
15
16
17
18A
19
20A
21
22A
24A
26
28
32''
32'
36
36A
42
148
149
150
150'
150''
151
153
160
164
173
200

Fig. 2A

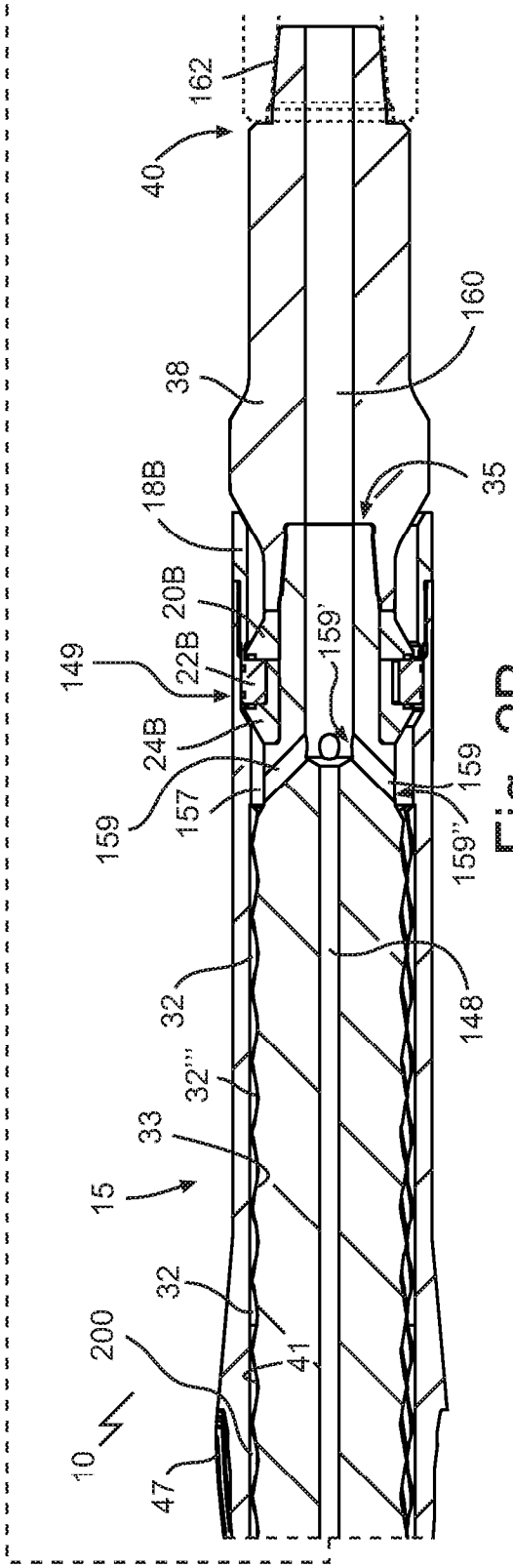
10
15
18B
20B
22B
24B
32
32'''
33
35
38
40
41
47
148
149
157
159
159'
159''
160
162
200

Fig. 2B

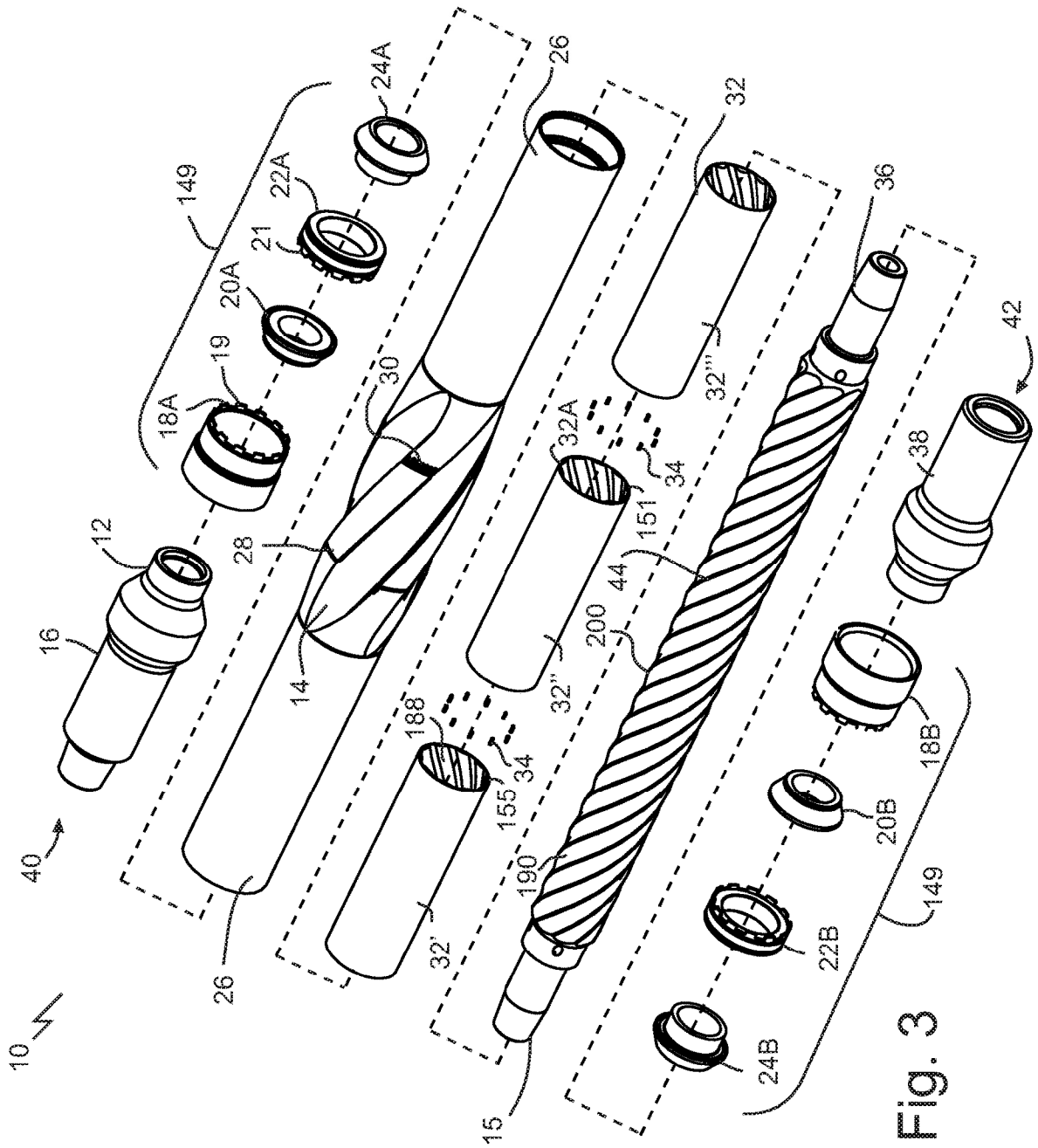
10
40
16
12
18A
19
20A
21
22A
24A
149
26
28
30
14
32
32'
32''
32'''
32A
34
151
188
155
190
200
44
36
42
38
18B
20B
22B
24B
15

Fig. 3

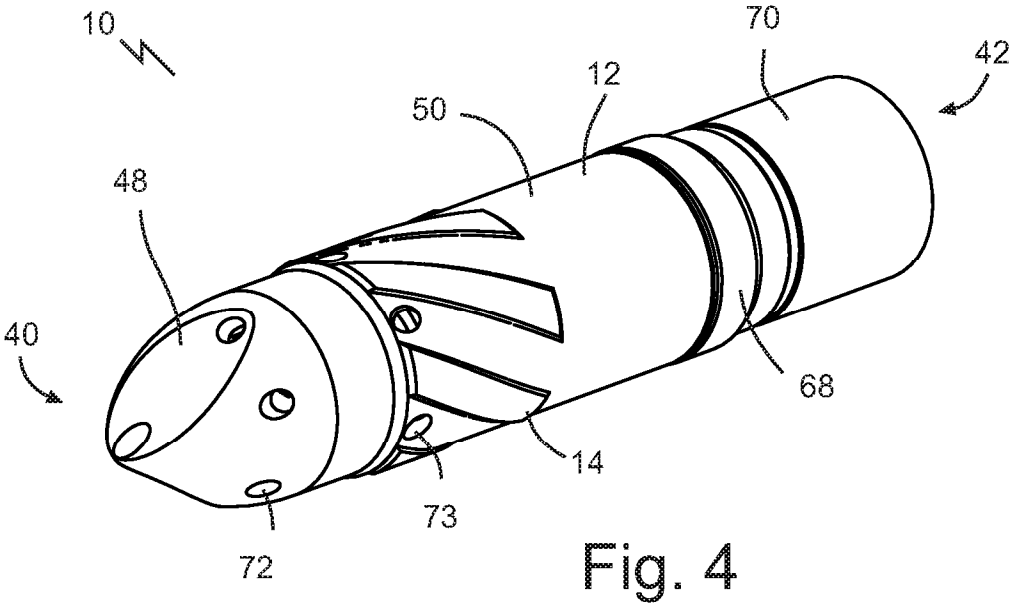

Fig. 4

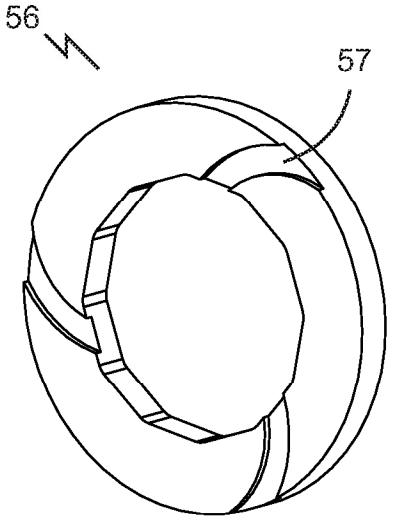

Fig. 5A

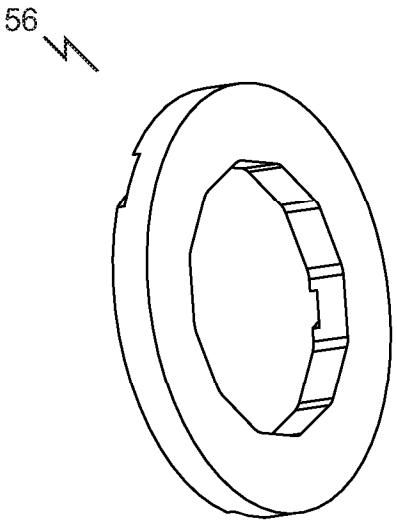

Fig. 5B

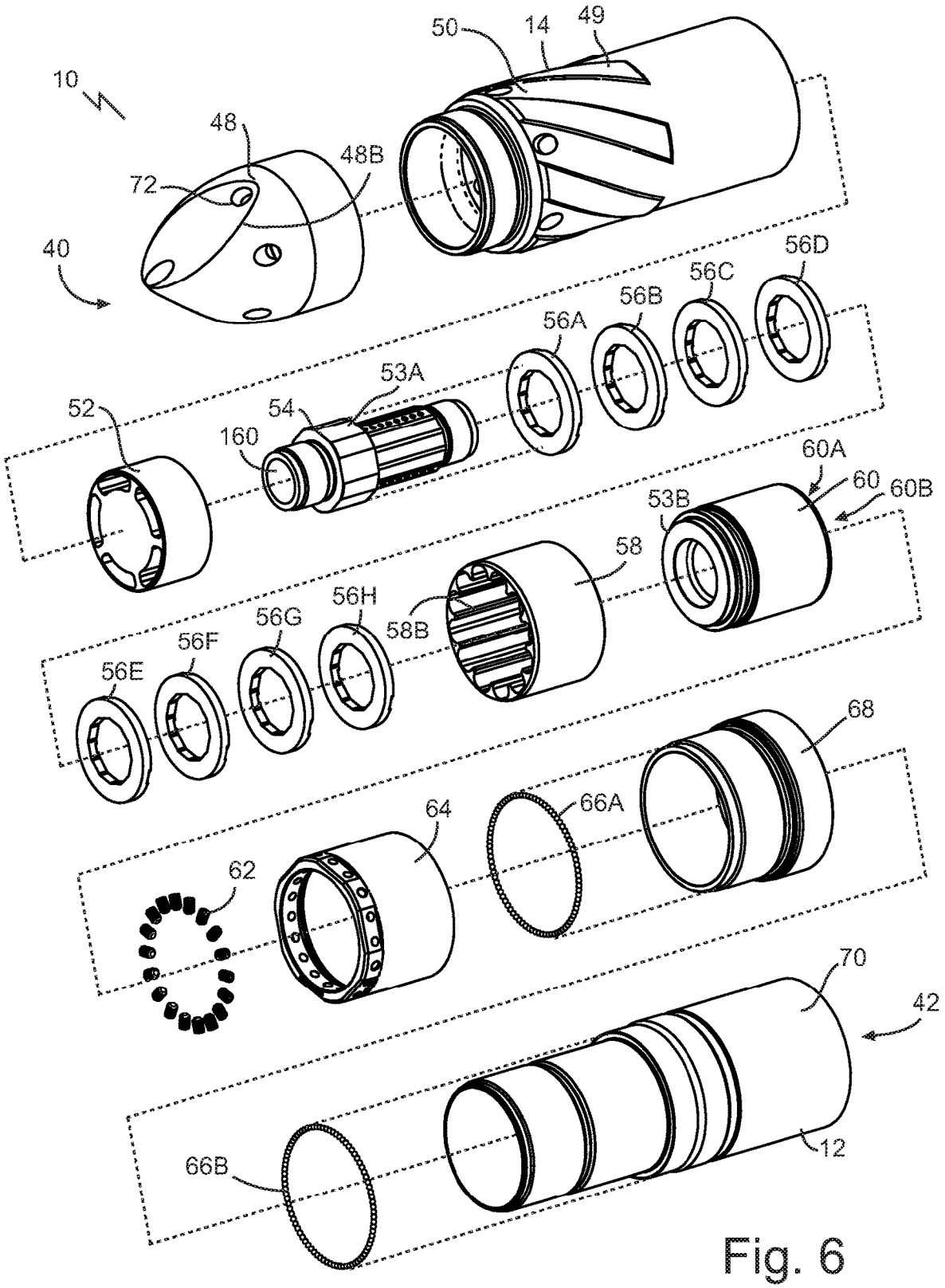
10
40
48
48B
72
50
14
49
56D
56C
56B
56A
53A
54
52
160
60A
60
60B
53B
58
58B
56H
56G
56F
56E
68
66A
64
62
70
42
12
66B

Fig. 6

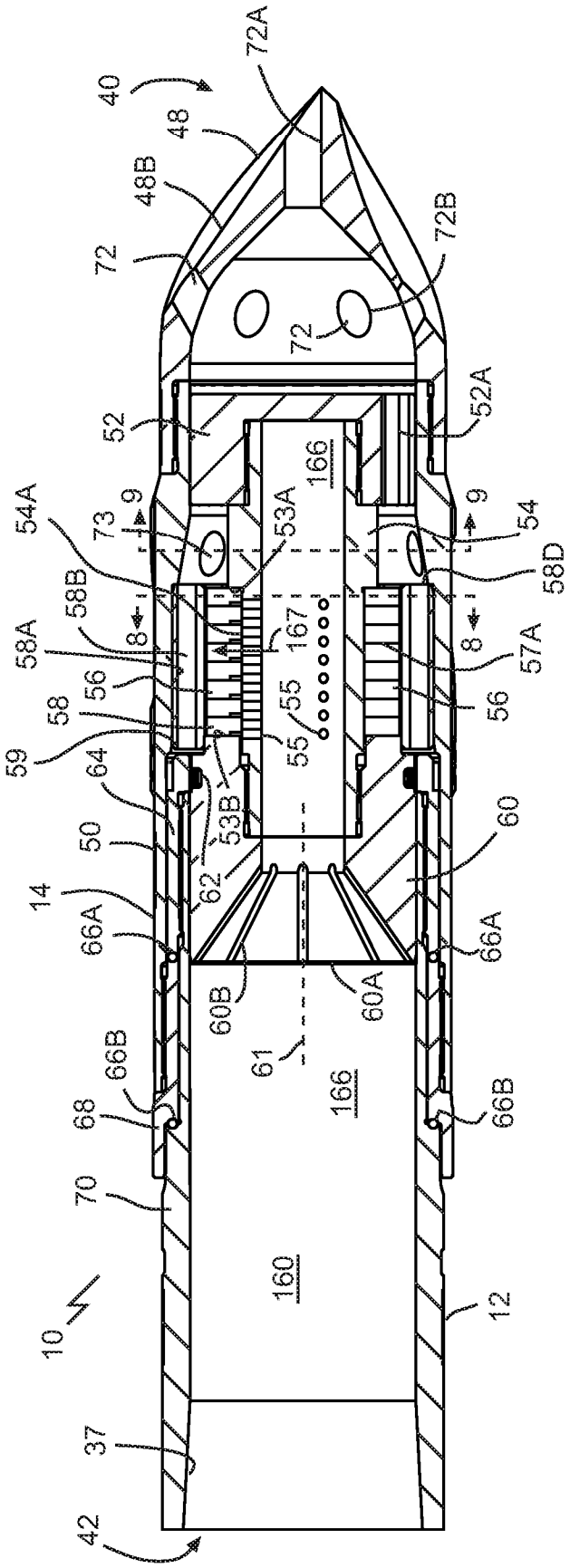
40
72A
48
48B
72
72B
72
52
52A
166
54A
73
9
53A
9
54
58B
58D
58A
8
167
8
57A
56
58
55
56
59
55
64
53B
50
60
14
62
66A
66A
60B
60A
61
66B
166
66B
68
70
160
10
12
37
42

Fig. 7

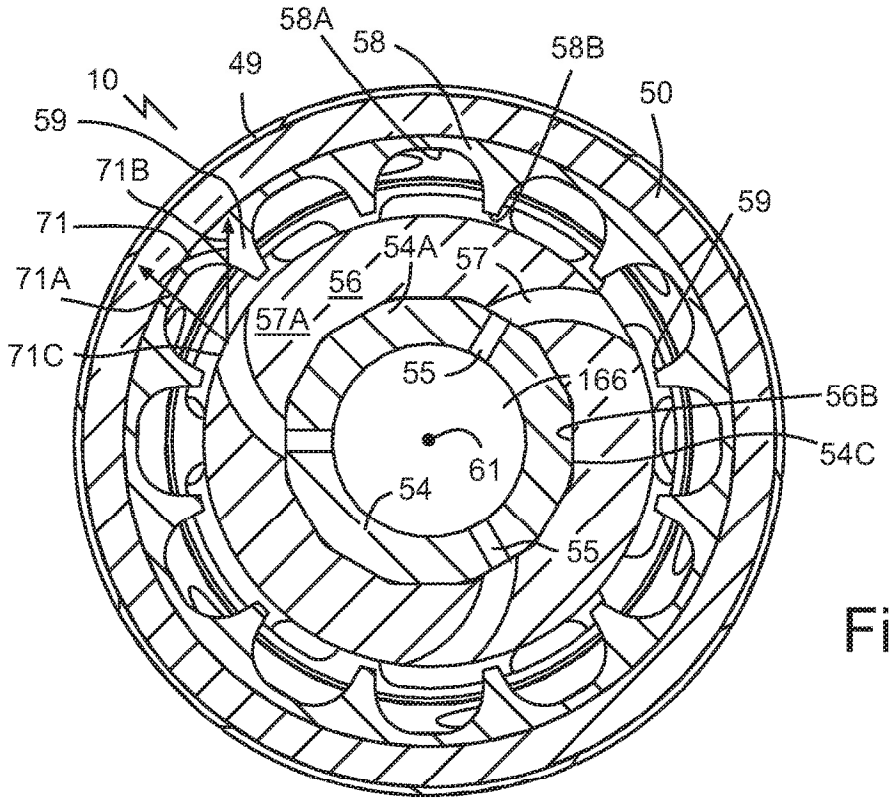
58A
58
58B
49
10
50
59
71B
59
71
54A
57
71A
56
57A
71C
55
166
56B
54C
61
54
55

Fig. 8

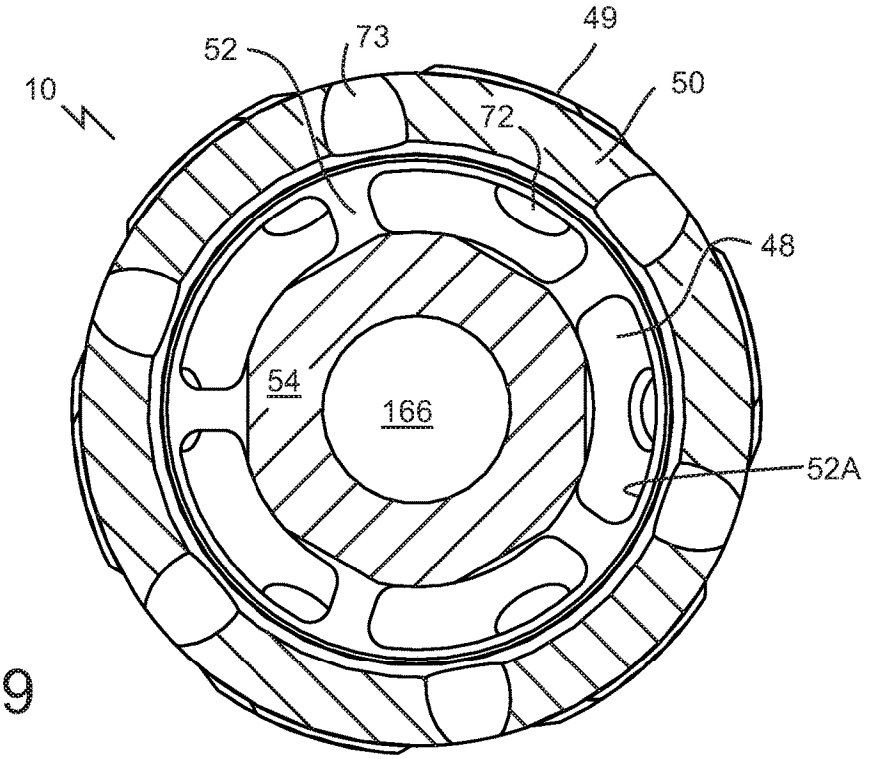
49
52
73
10
50
72
48
54
166
52A

Fig. 9

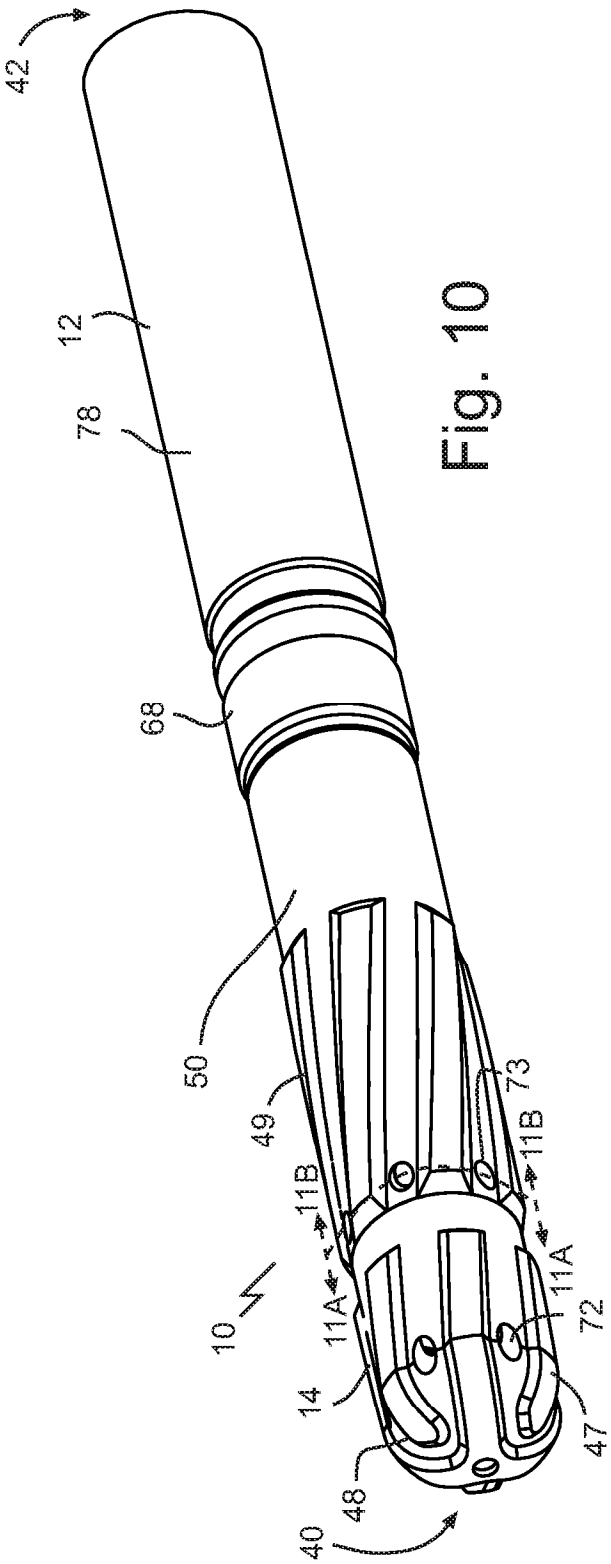

Fig. 10

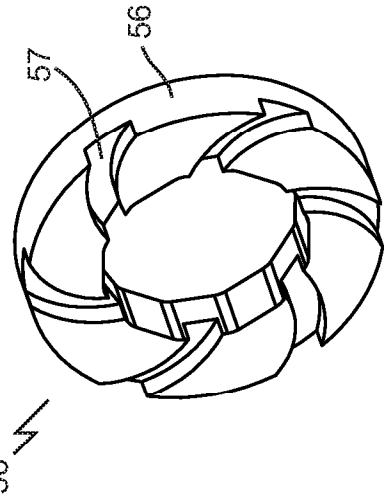

Fig. 12

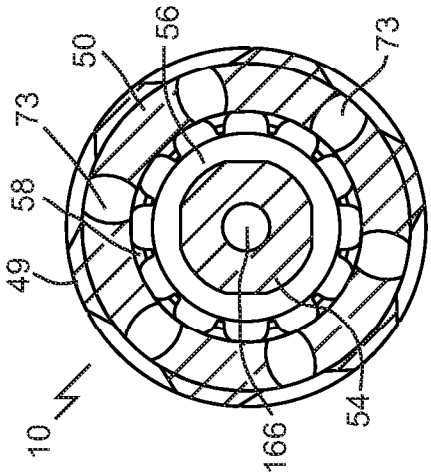

Fig. 11B

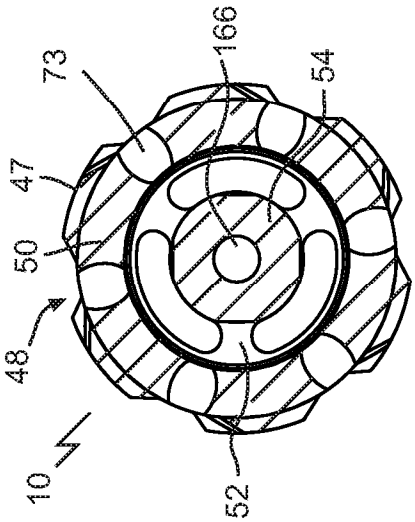

Fig. 11A

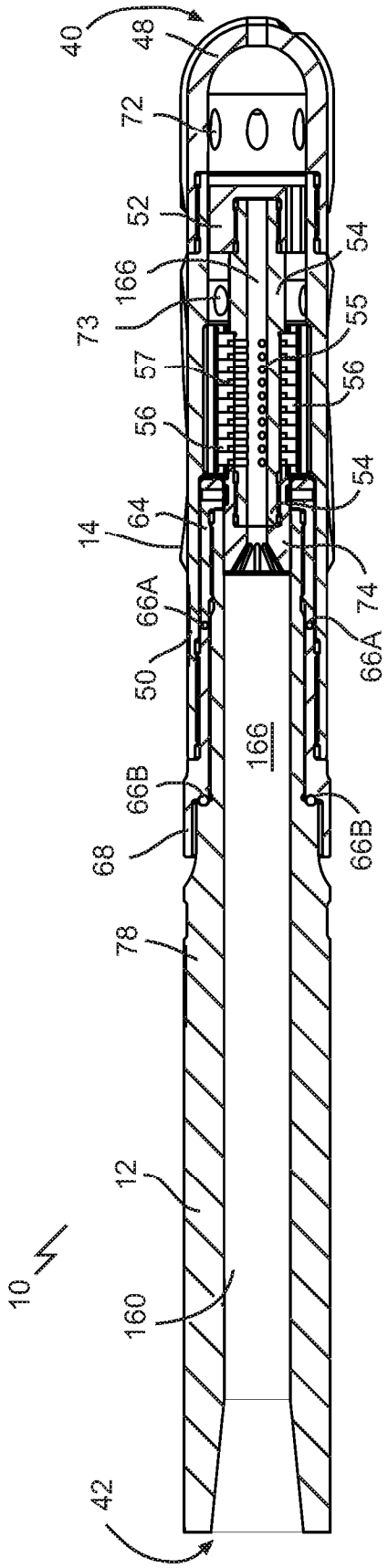
40
48
72
52
166
73
57
56
64
14
66A
50
66B
68
78
12
10
160
42
54
55
56
54
74
66A
166
66B

Fig. 13

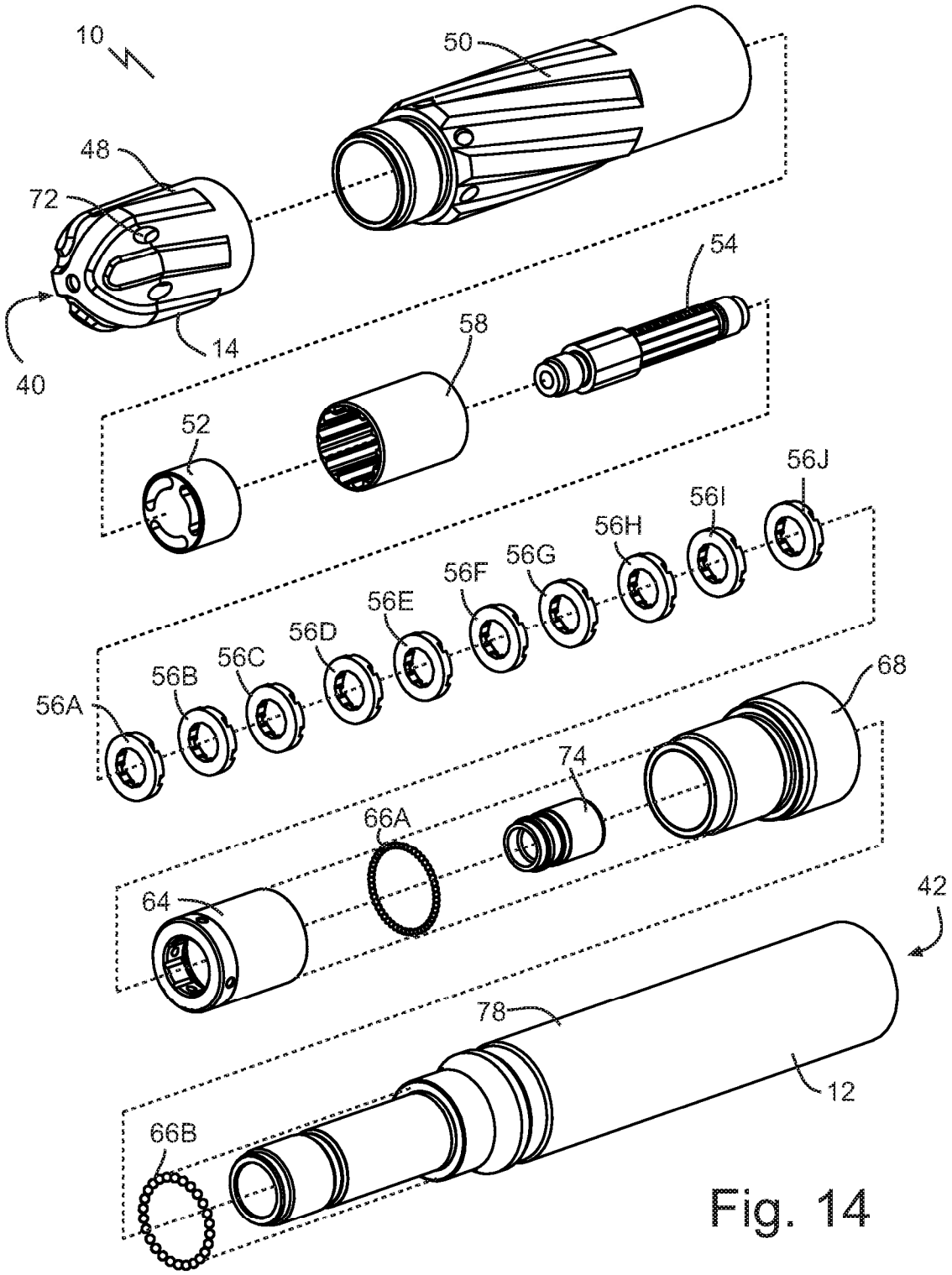
10
50
48
72
54
58
14
40
52
56J
56I
56H
56G
56F
56E
56D
56C
56B
56A
68
74
66A
64
42
78
12
66B

Fig. 14

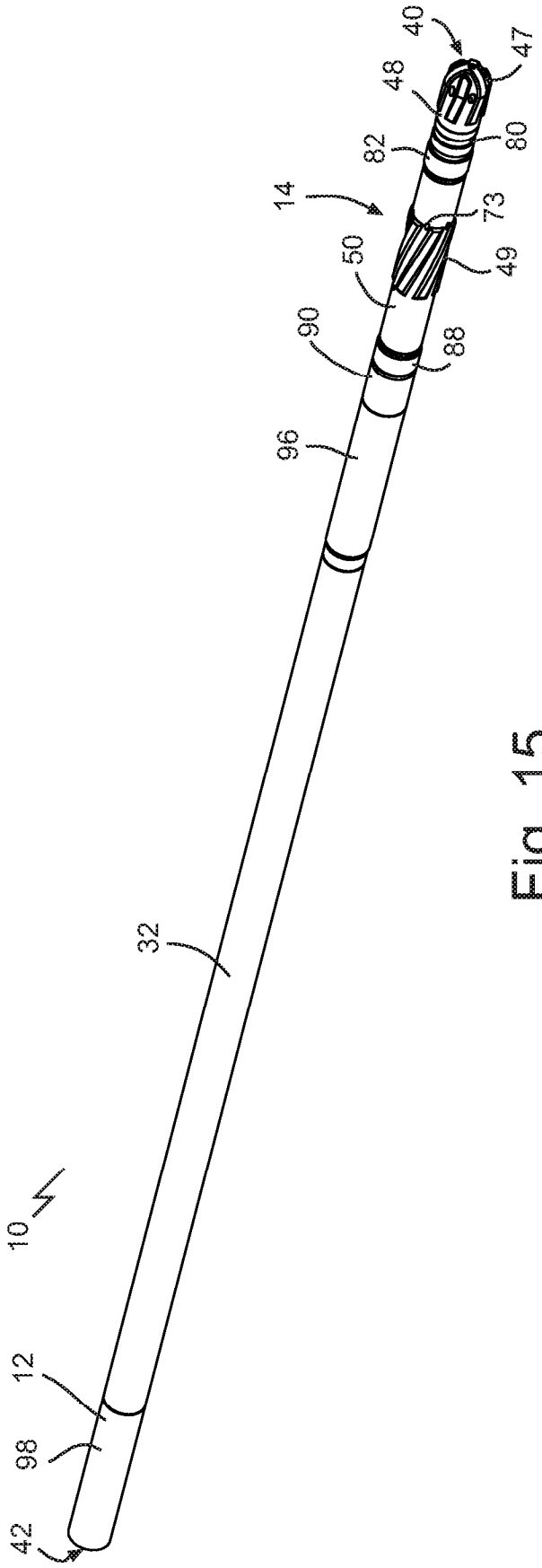

Fig. 15

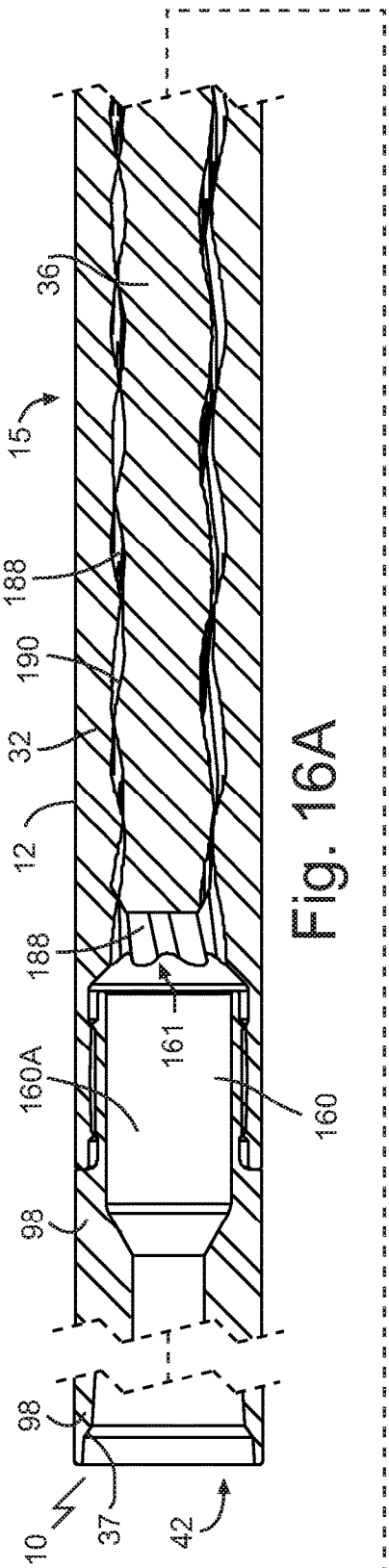

Fig. 16A

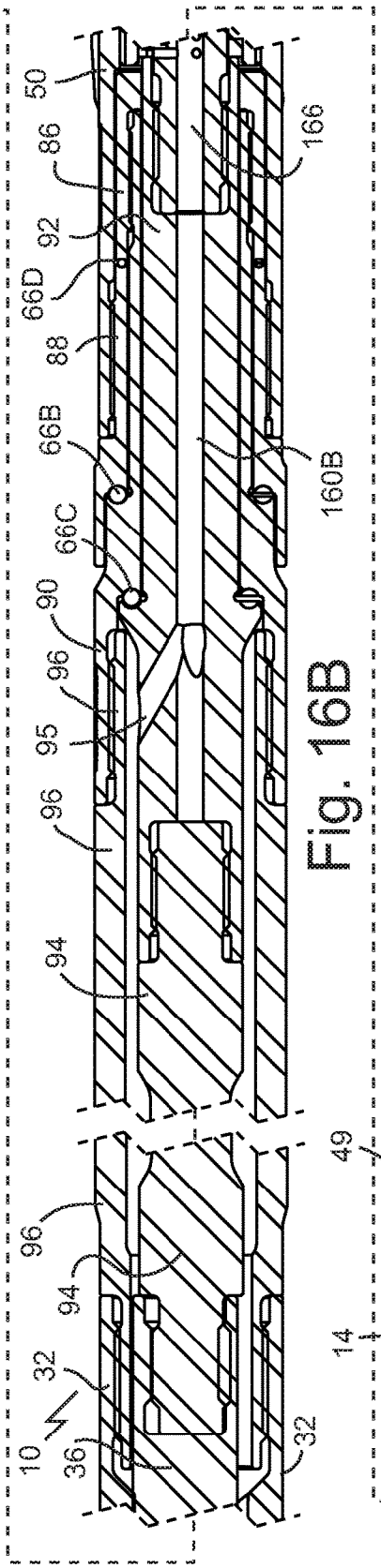

Fig. 16B

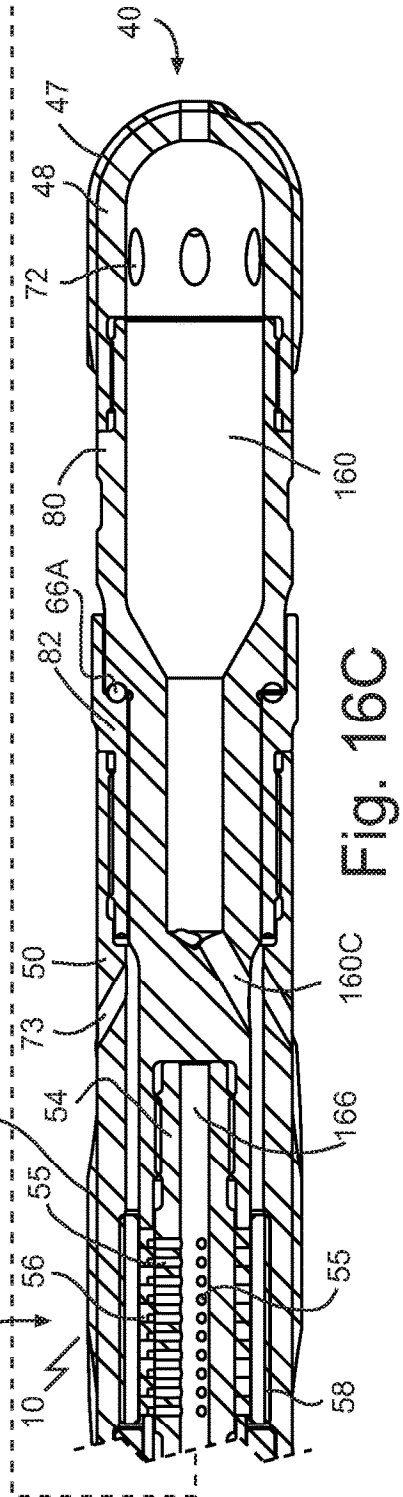

Fig. 16C

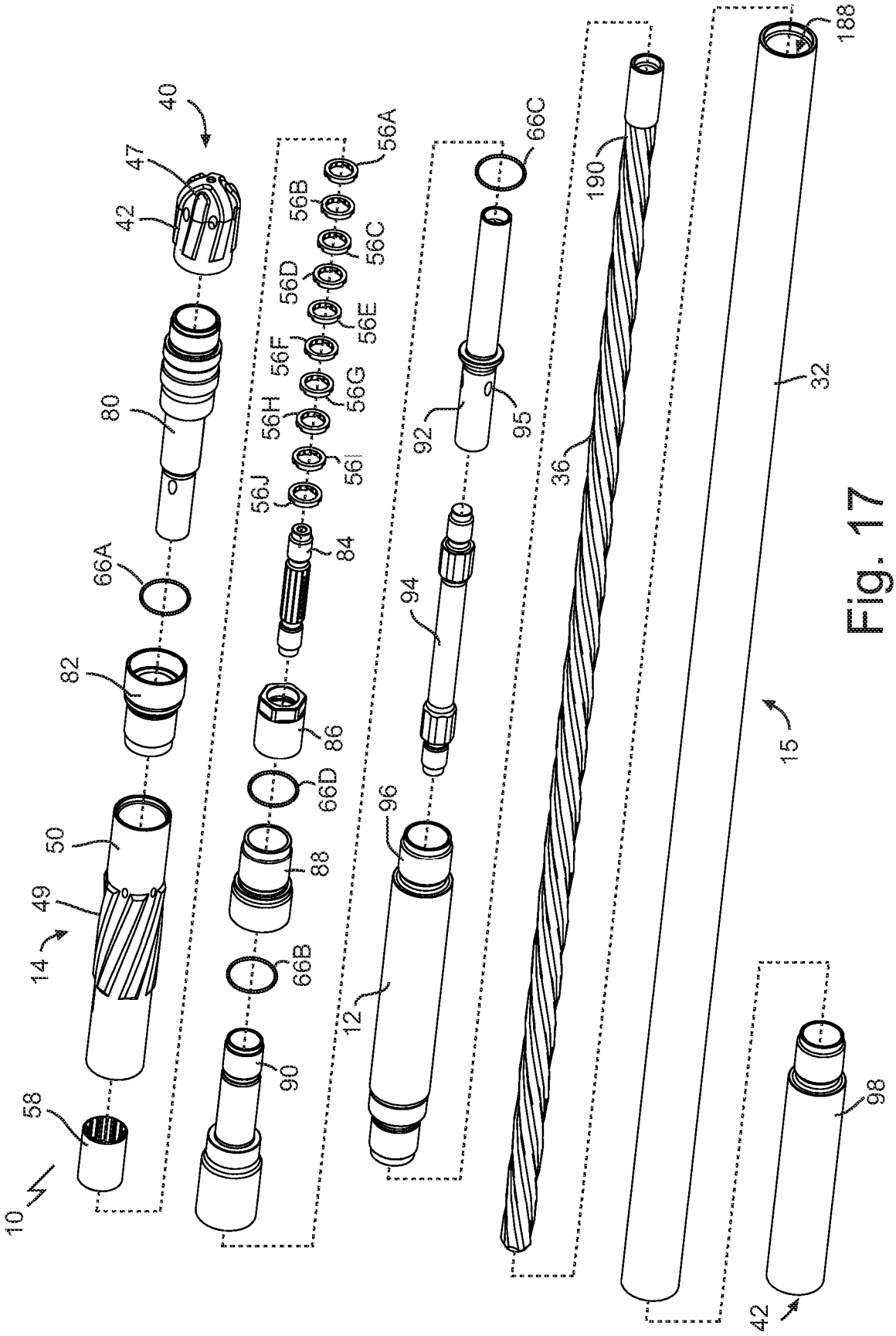
40
47
42
80
66A
82
50
49
14
58
10
56A
56B
56C
56D
56E
56F
56G
56H
56I
56J
84
86
66D
88
66B
90
12
96
94
92
95
66C
190
36
188
32
15
98
42

Fig. 17

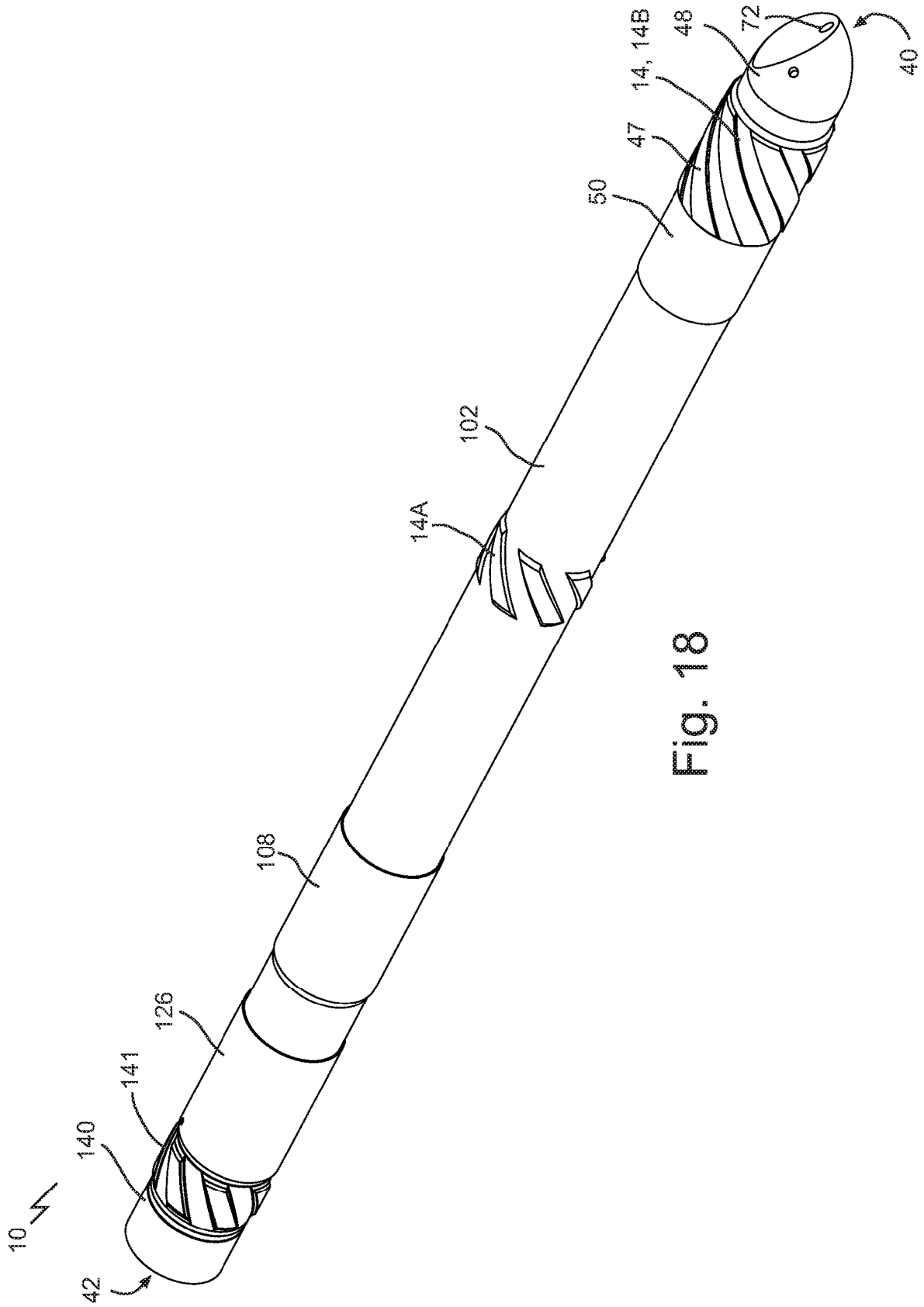

Fig. 18

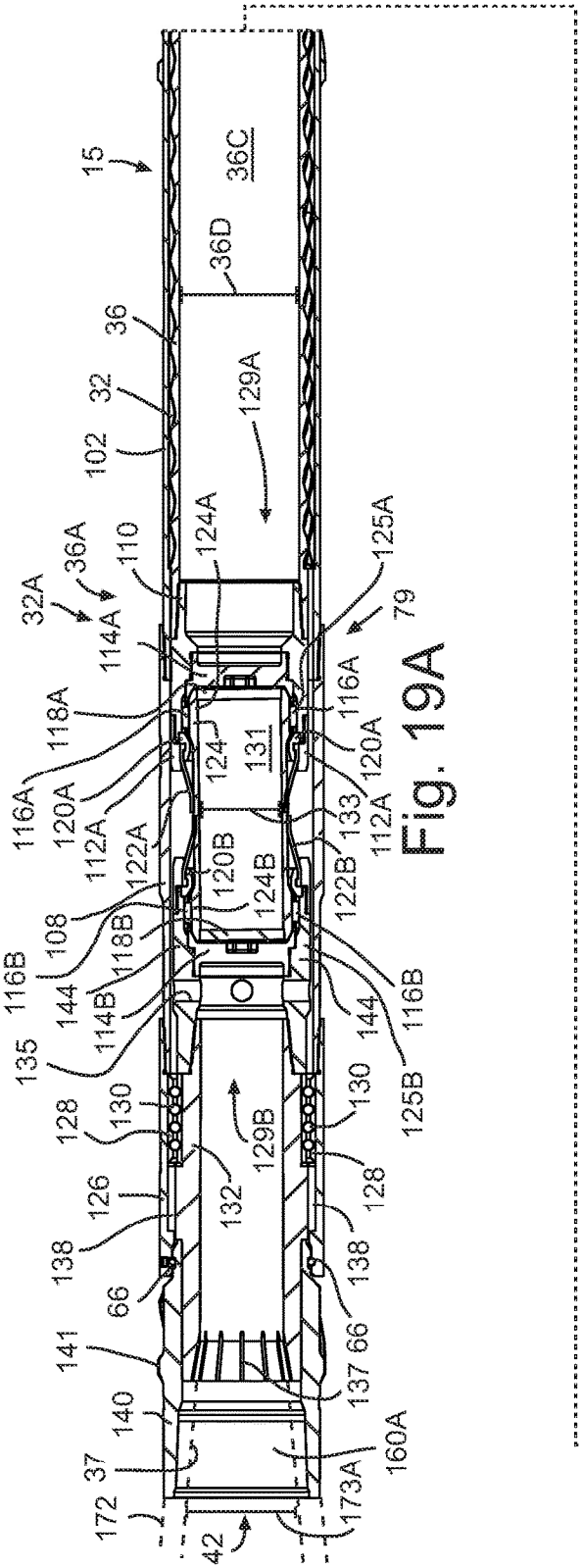

Fig. 19A

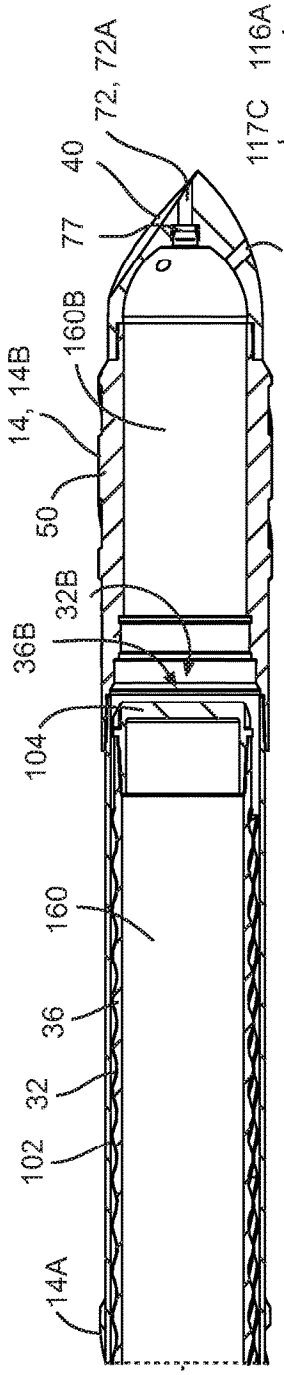

Fig. 19B

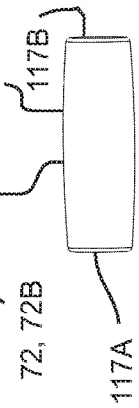

Fig. 19C

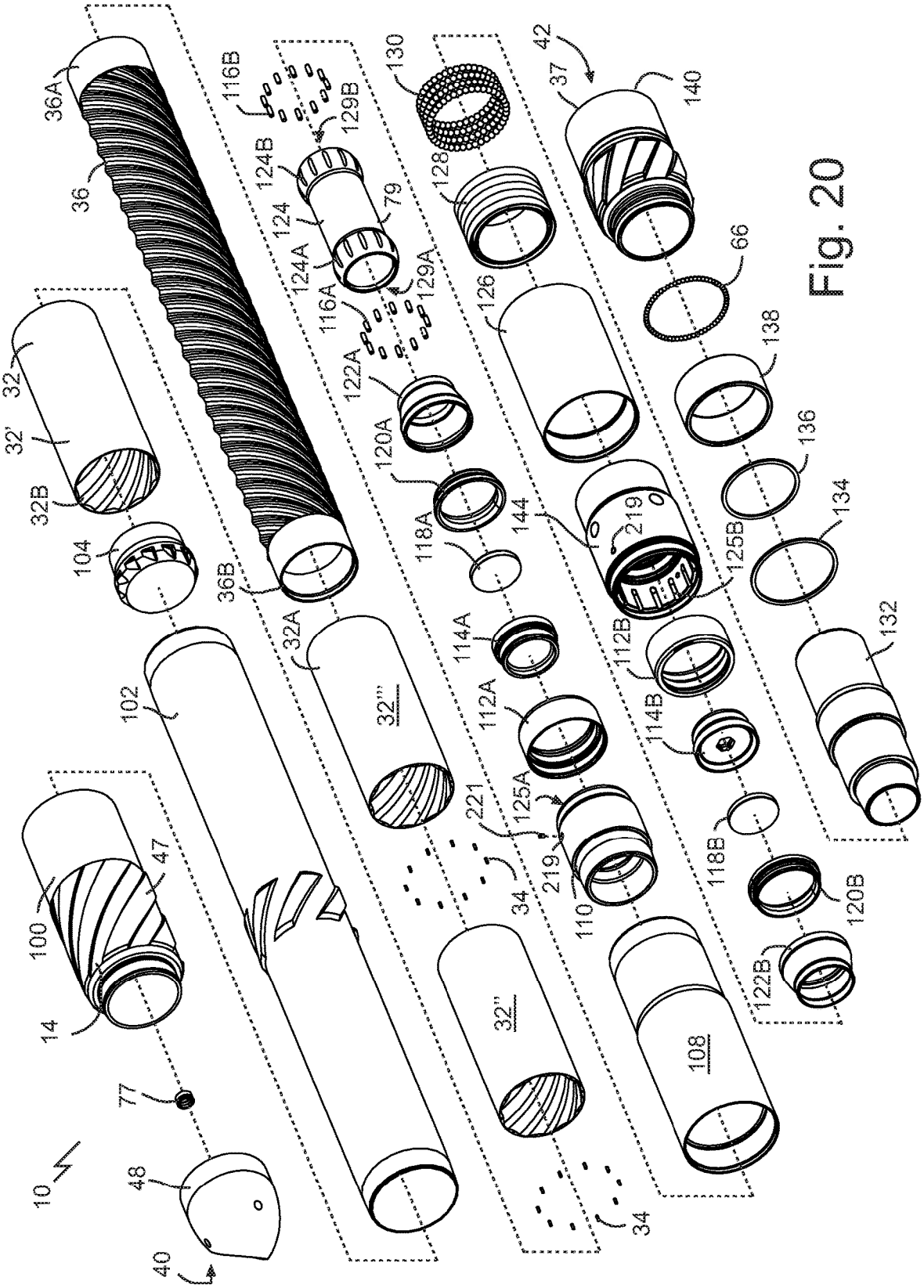
10
14
32
32'
32B
32A
32''
32'''
34
36
36A
36B
37
40
42
47
48
66
79
100
102
104
108
110
112A
112B
114A
114B
116A
116B
118A
118B
120A
120B
122A
122B
124
124A
124B
125A
125B
126
128
129A
129B
130
132
134
136
138
140
144
219
221
77

Fig. 20

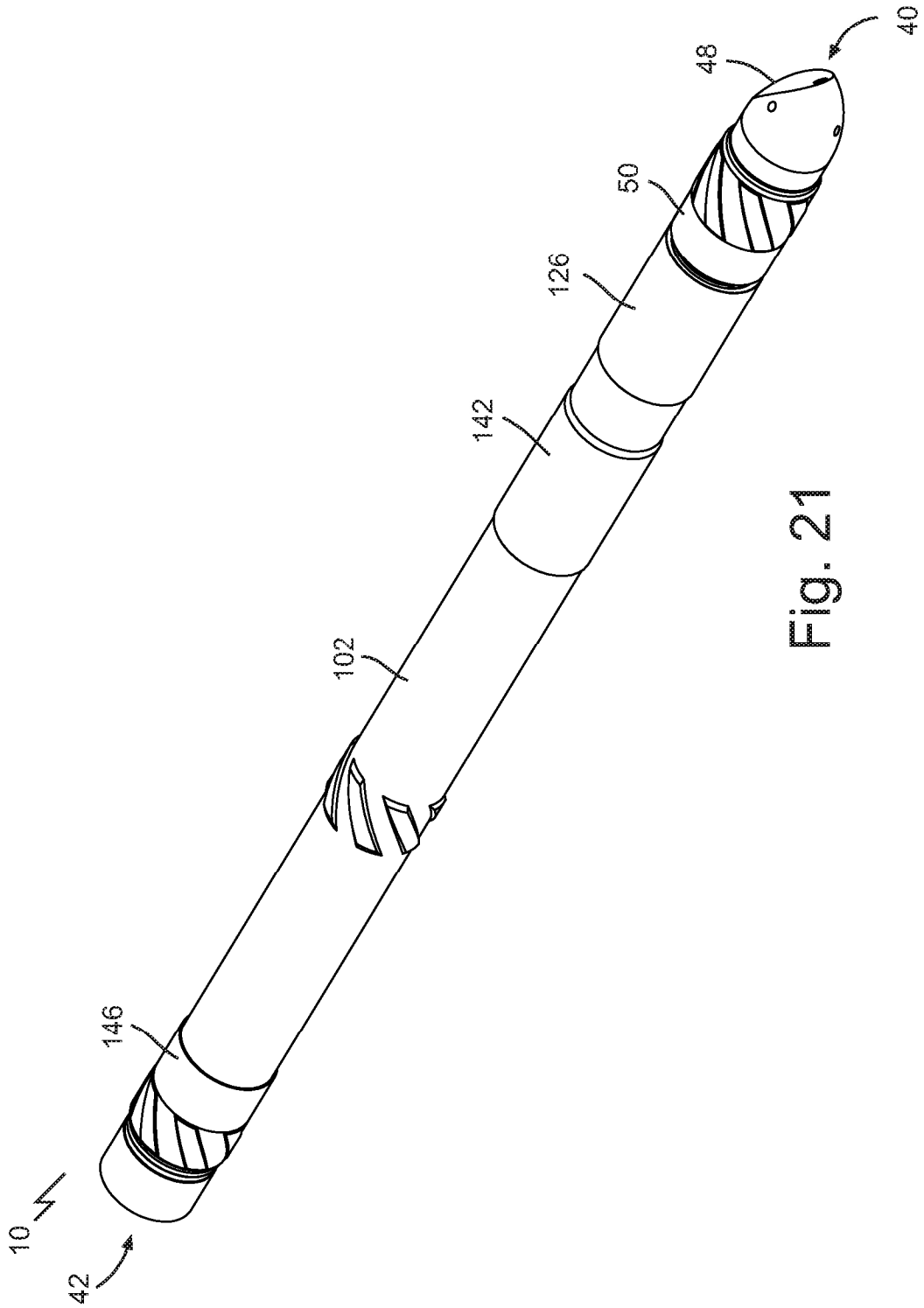

Fig. 21

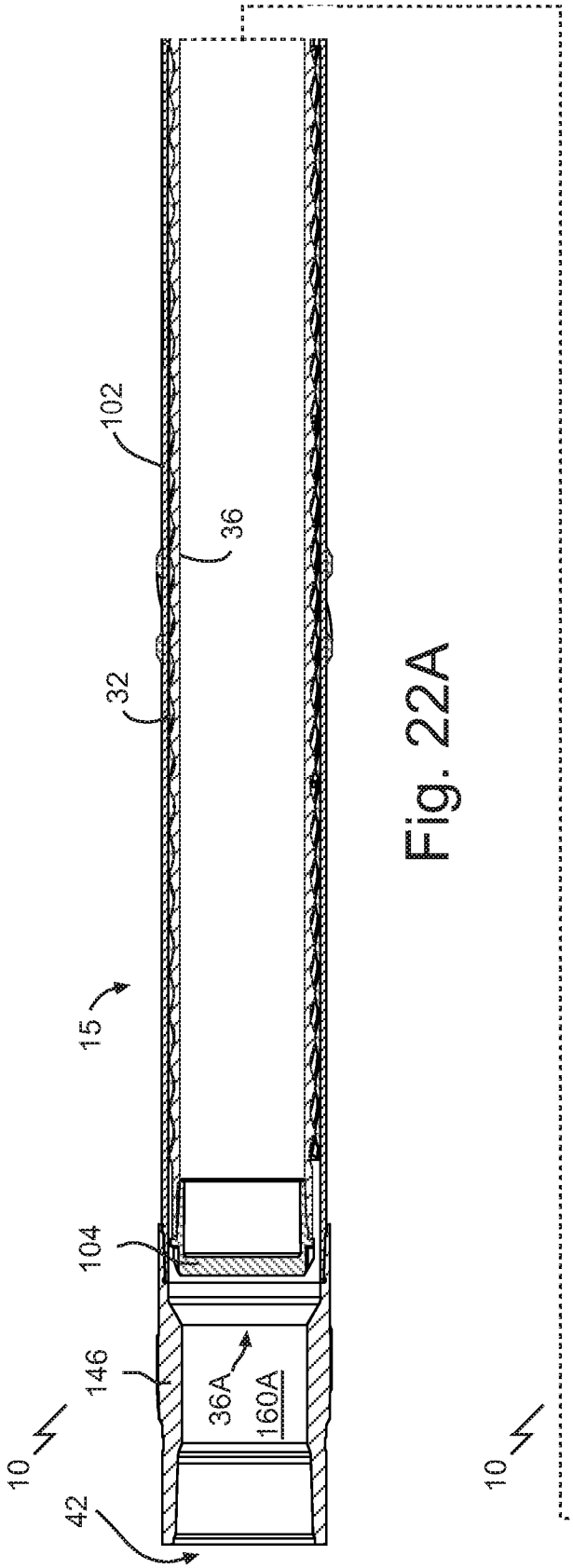

Fig. 22A

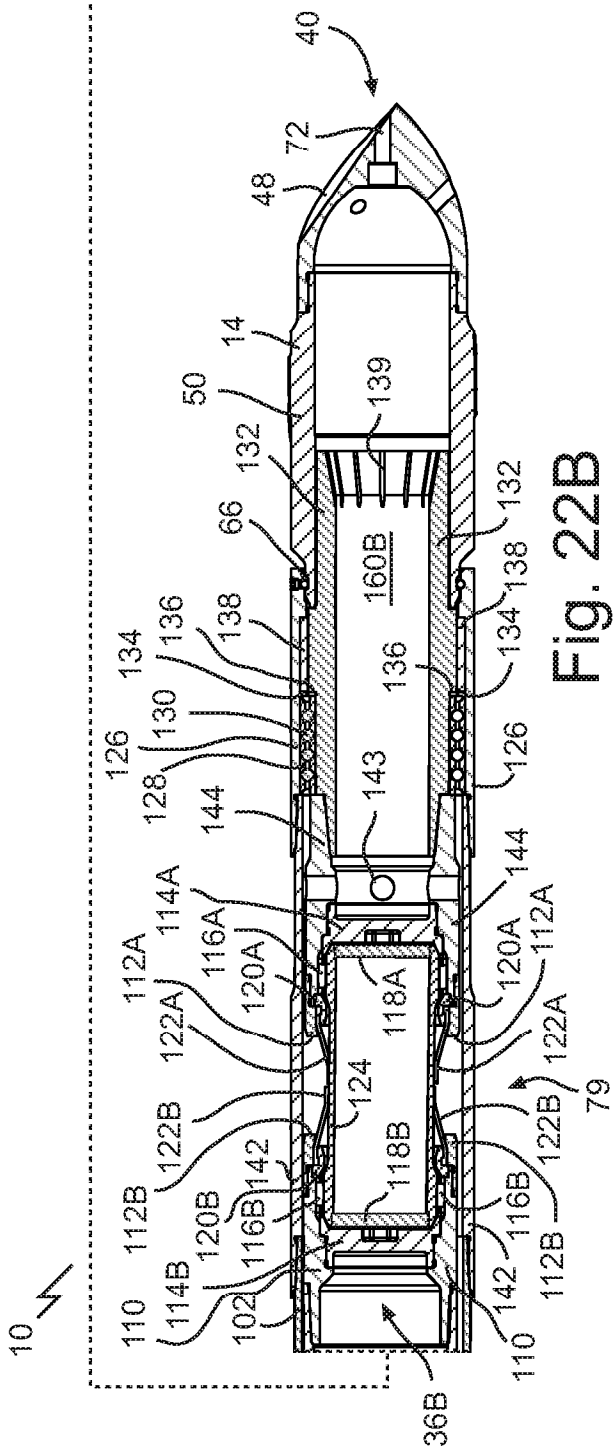

Fig. 22B

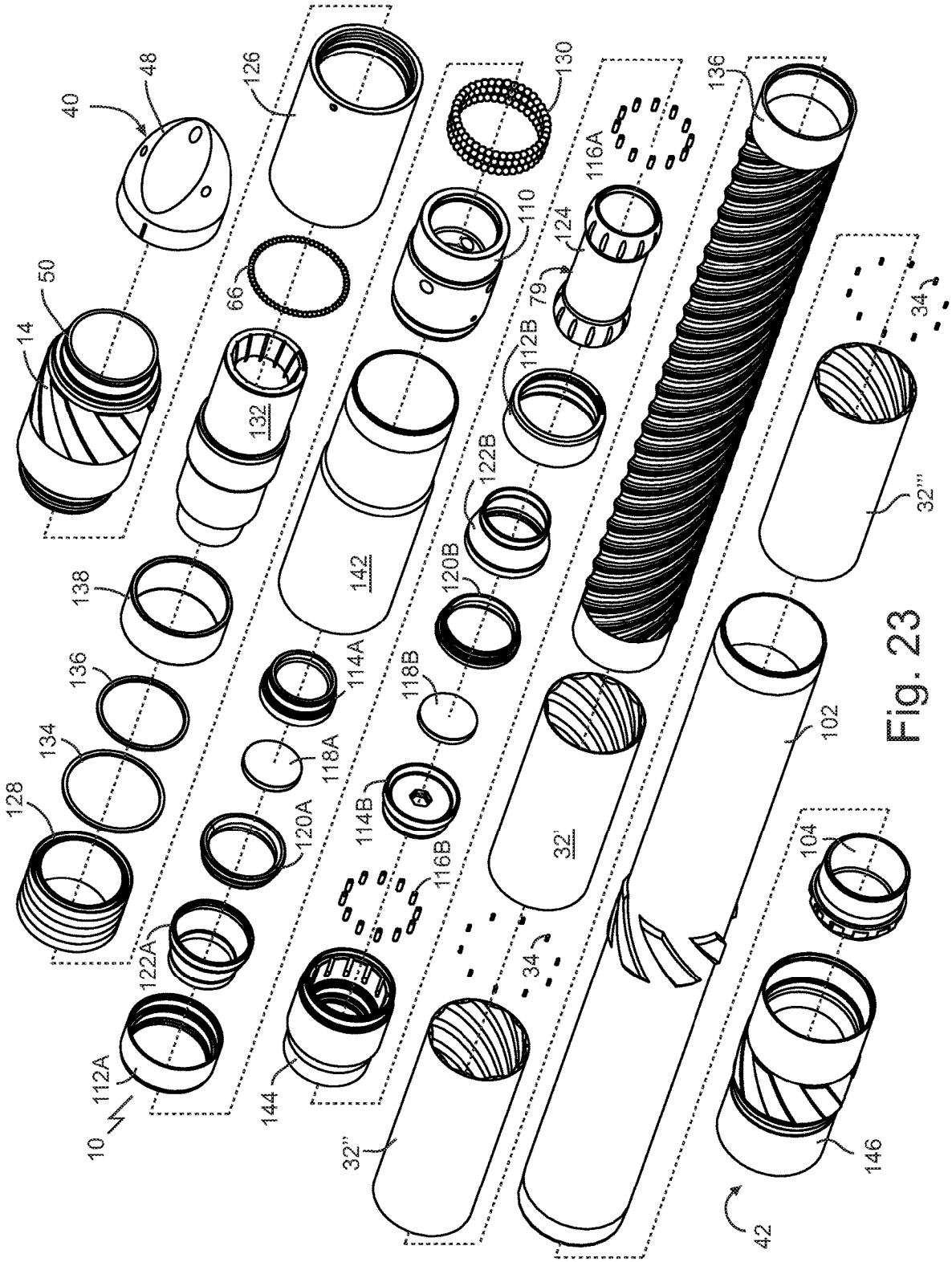
40
48
126
130
136
116A
110
124
79
50
14
66
132
112B
34
122B
142
32'''
138
120B
136
114A
118B
134
118A
102
128
120A
114B
32'
116B
104
122A
34
112A
144
10
32''
146
42

Fig. 23

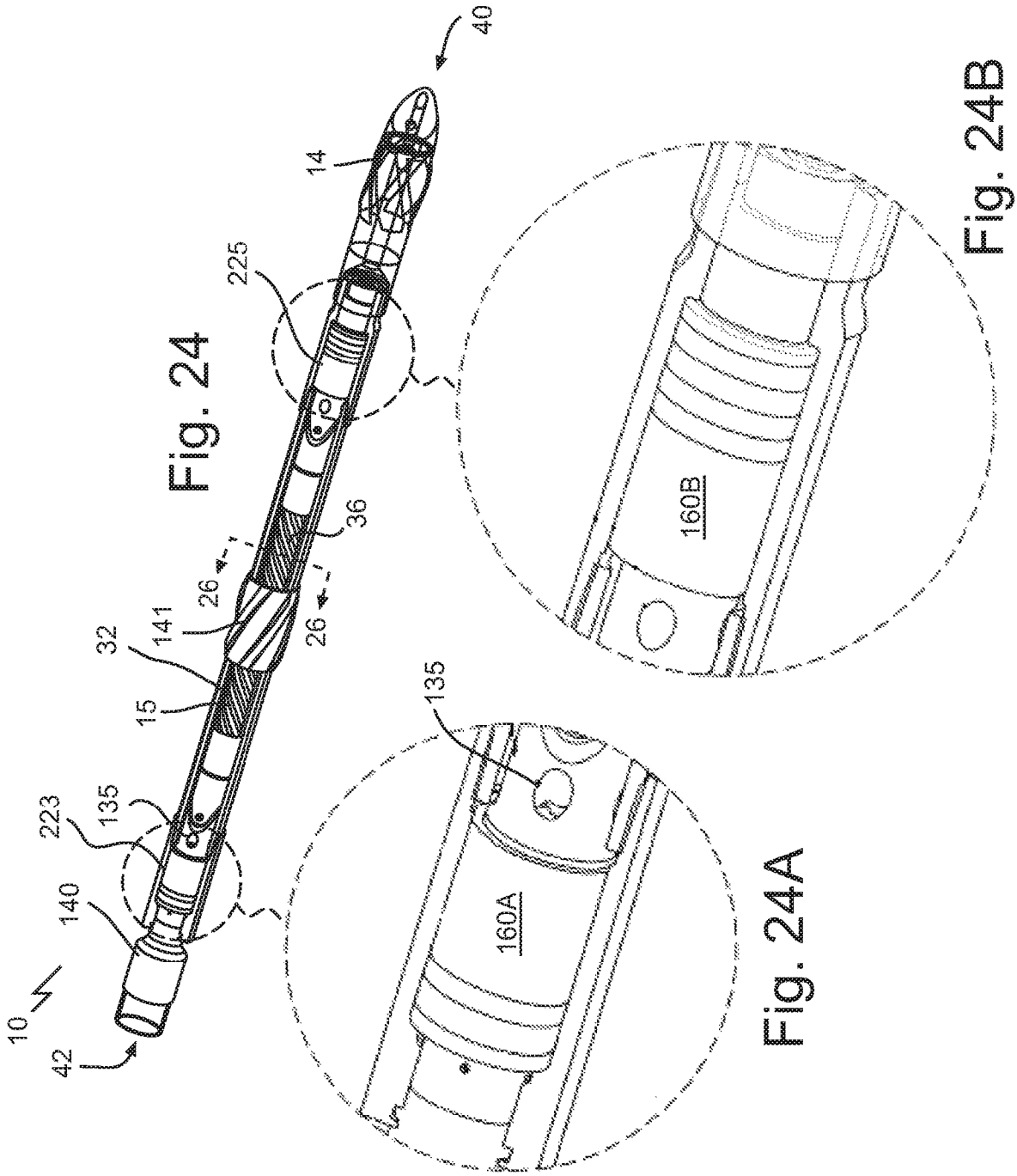

Fig. 24

Fig. 24A

Fig. 24B

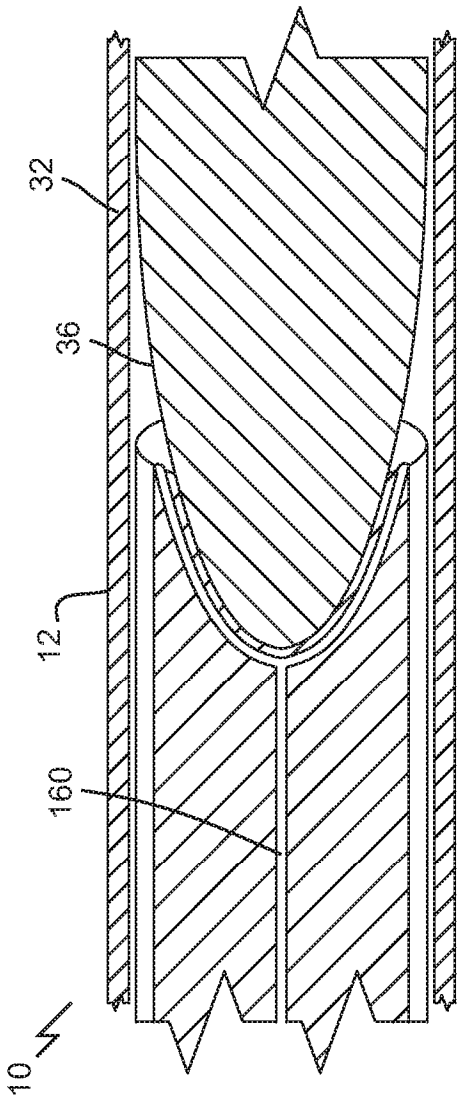

Fig. 25

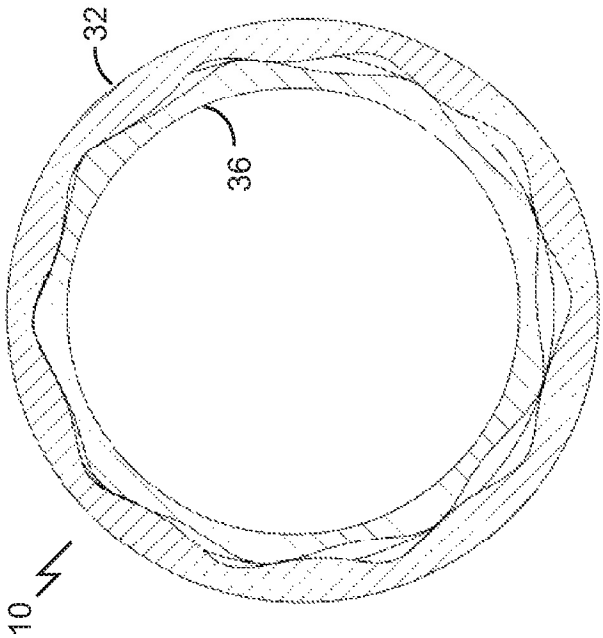

Fig. 26

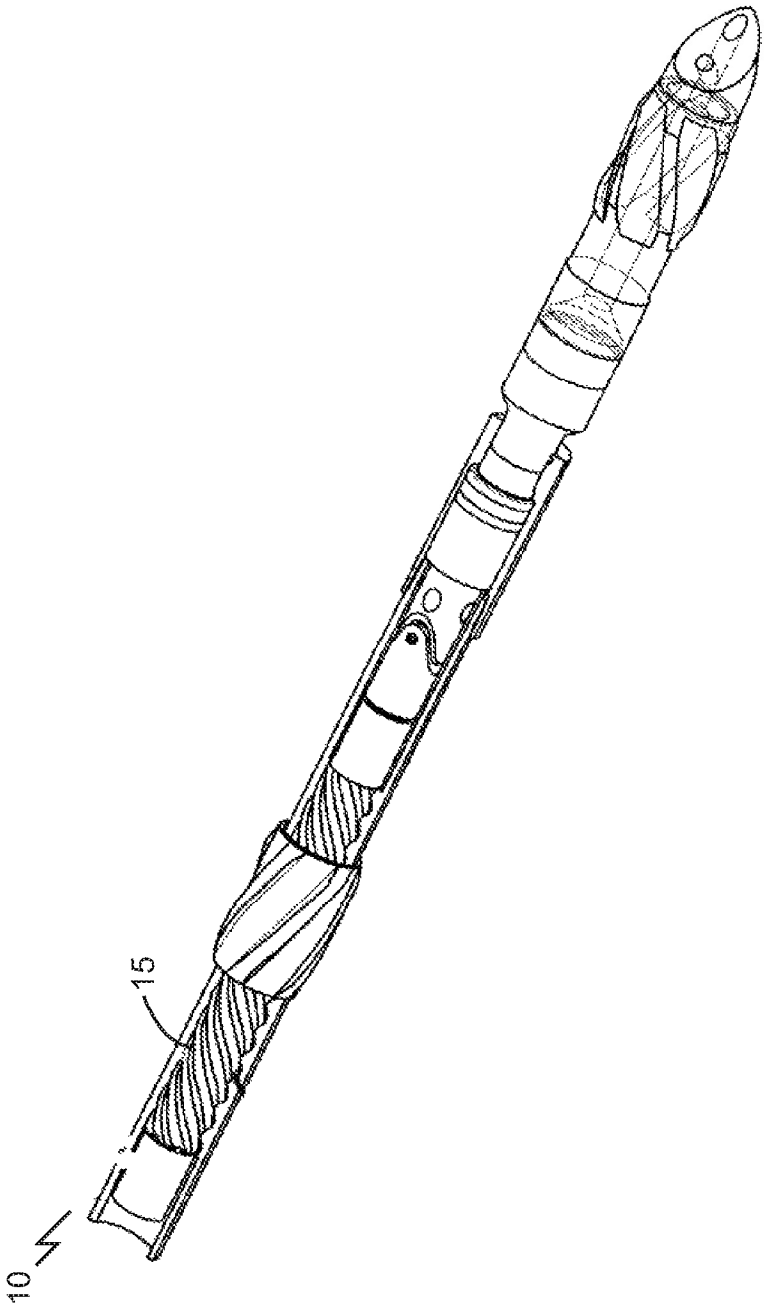

Fig. 27

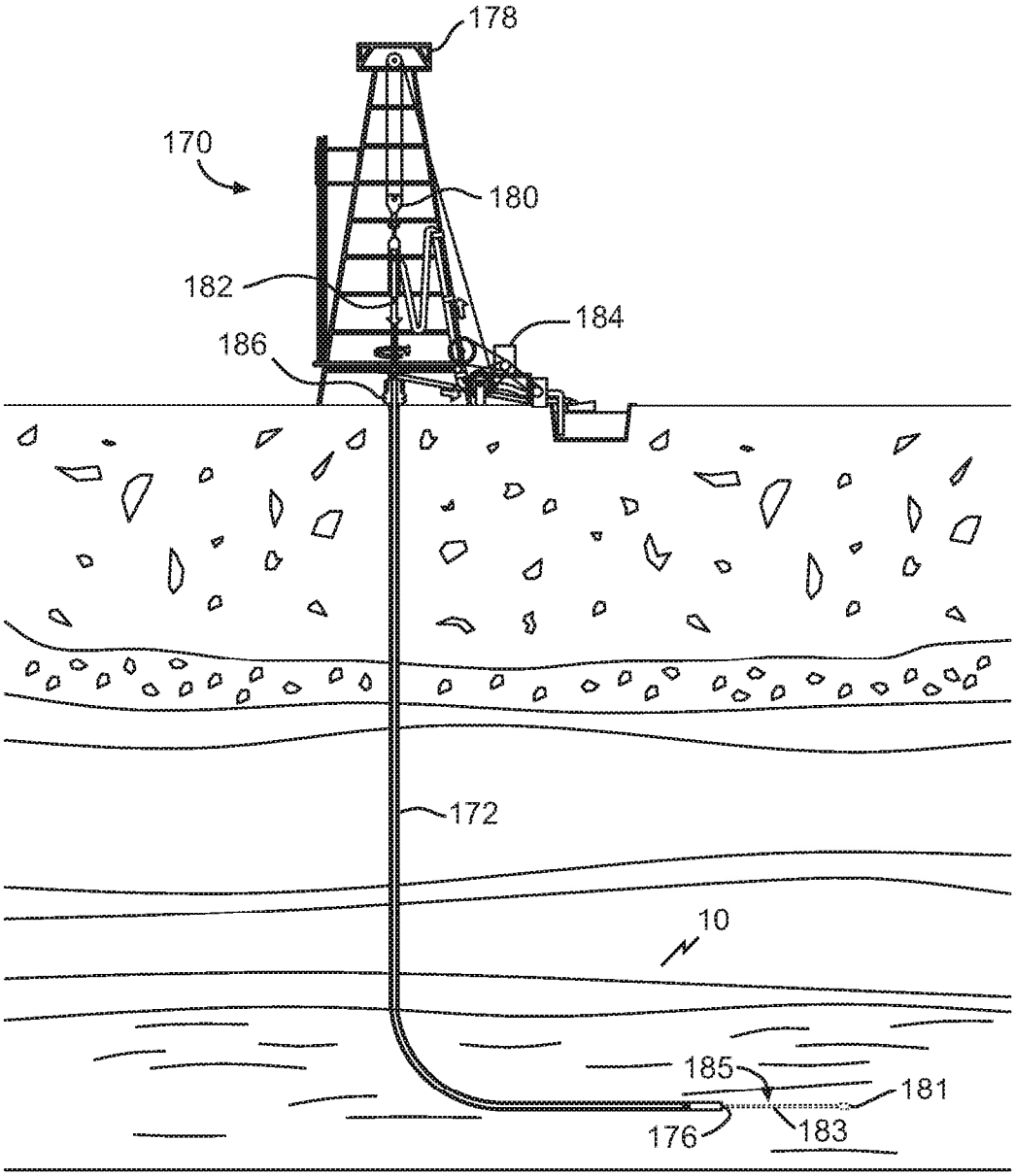

Fig. 28

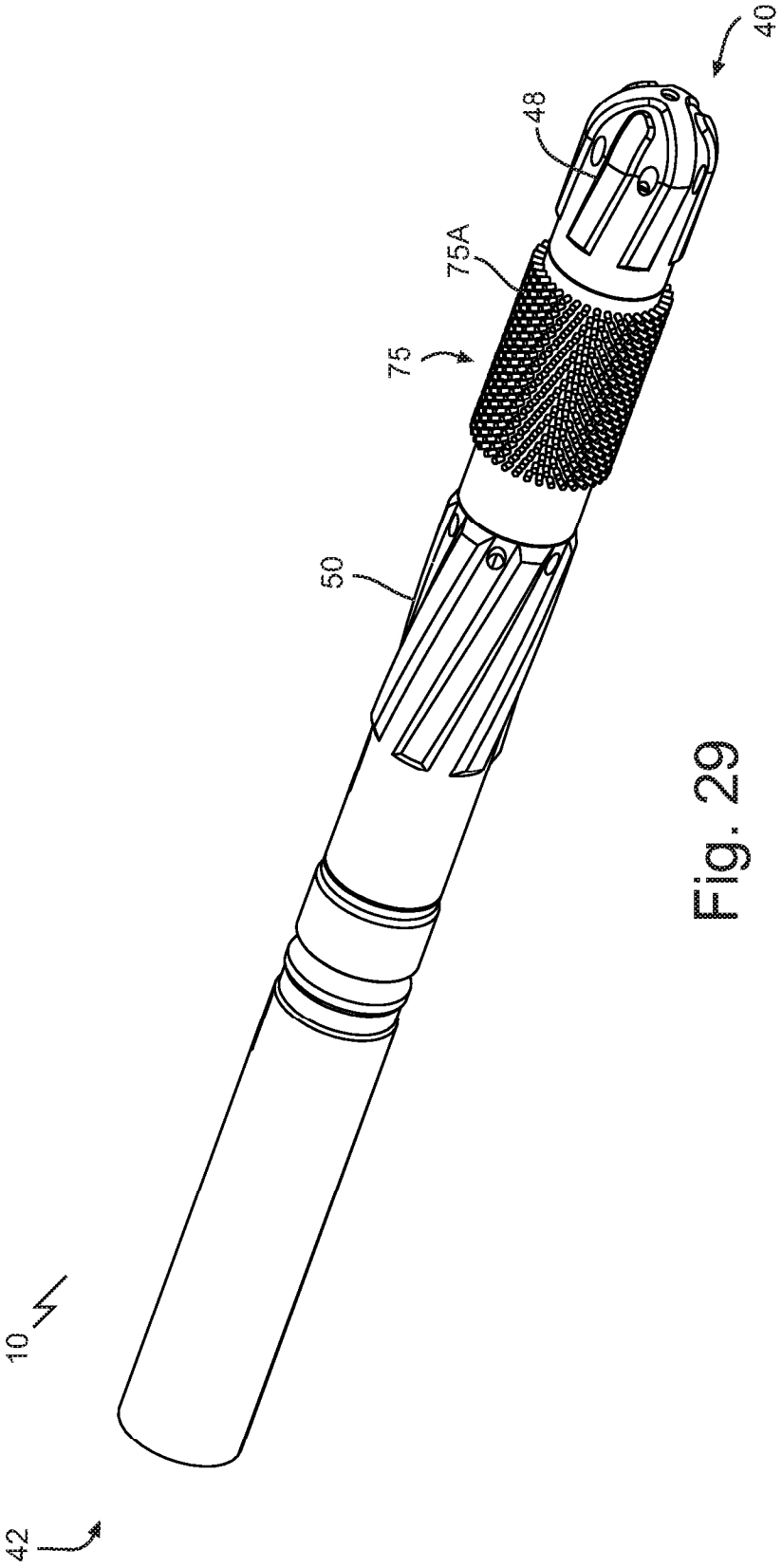

Fig. 29

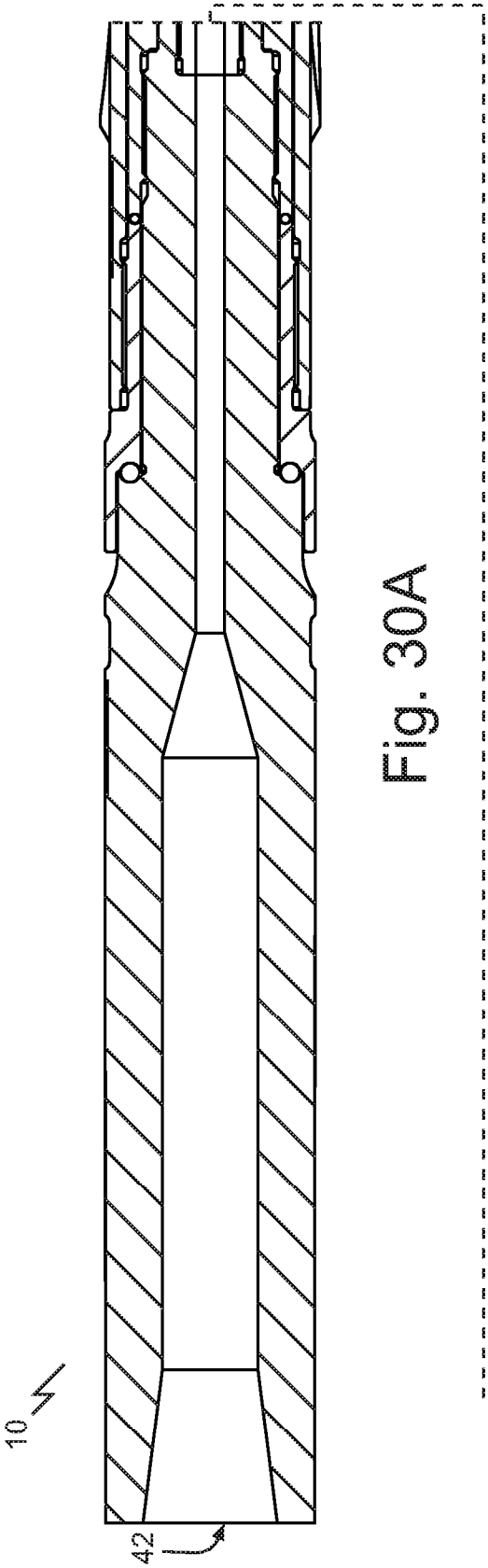

Fig. 30A

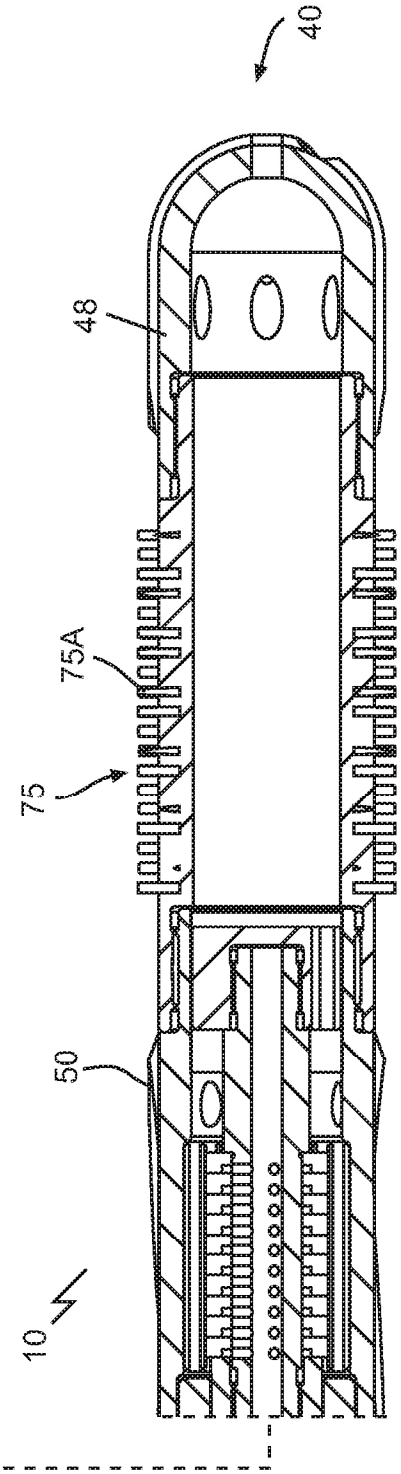

Fig. 30B

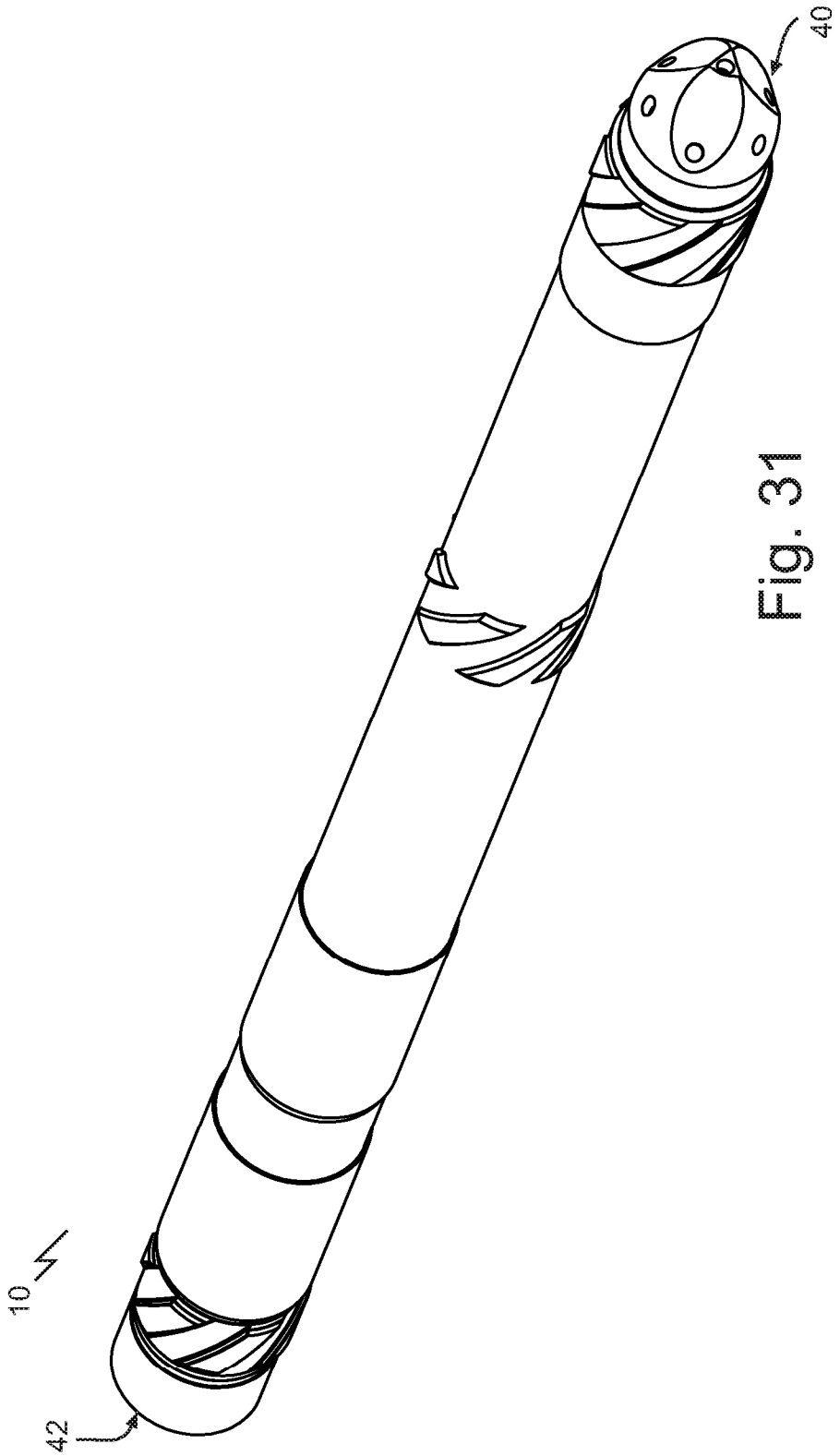

Fig. 31

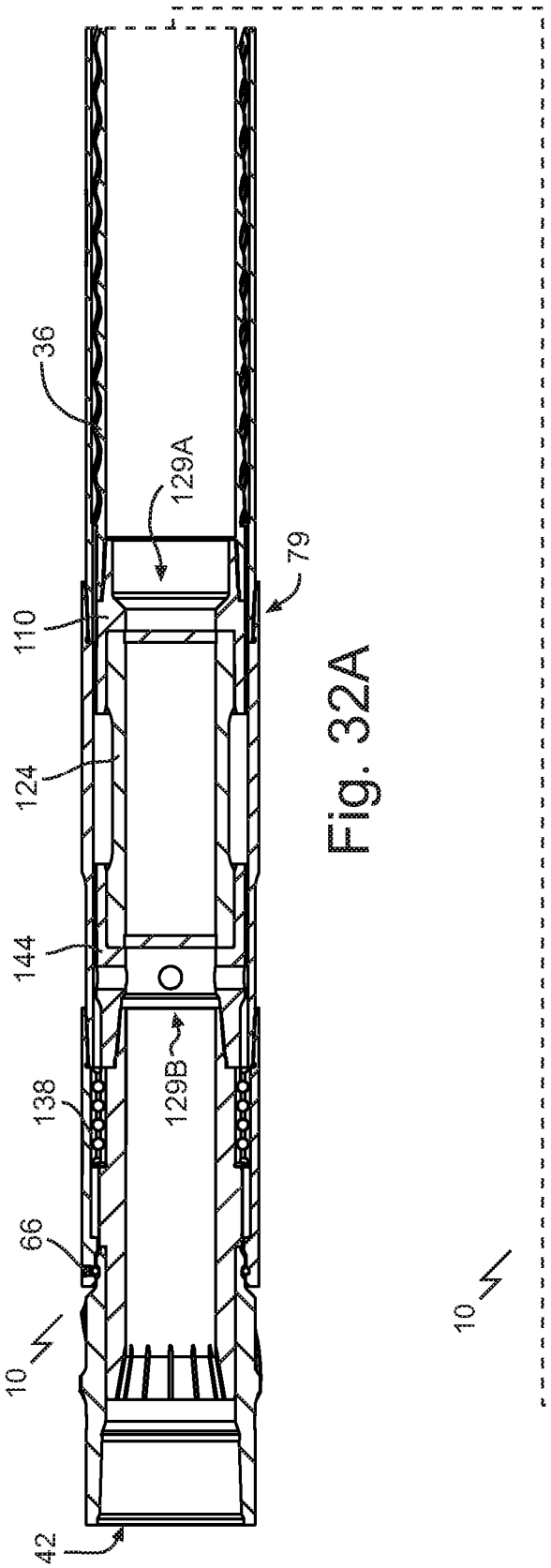

Fig. 32A

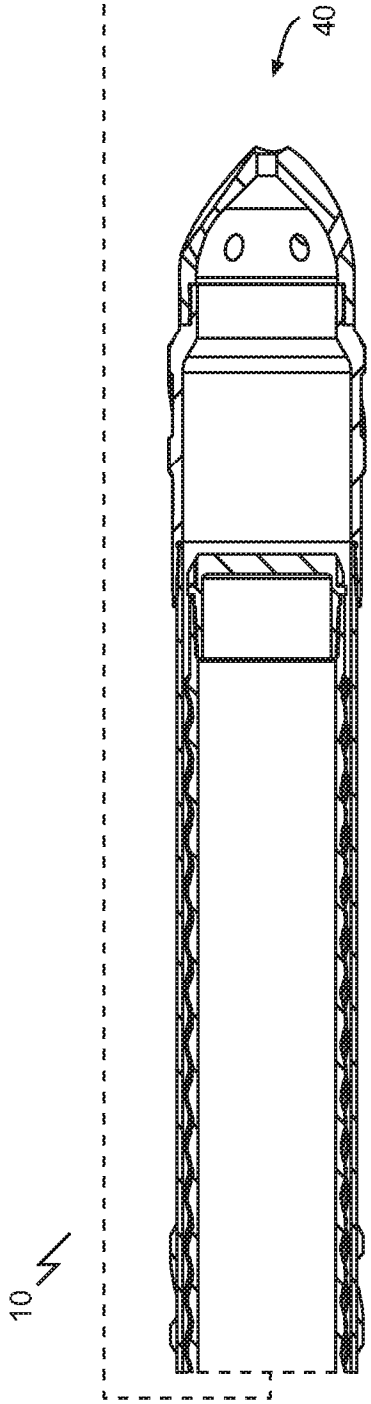

Fig. 32B

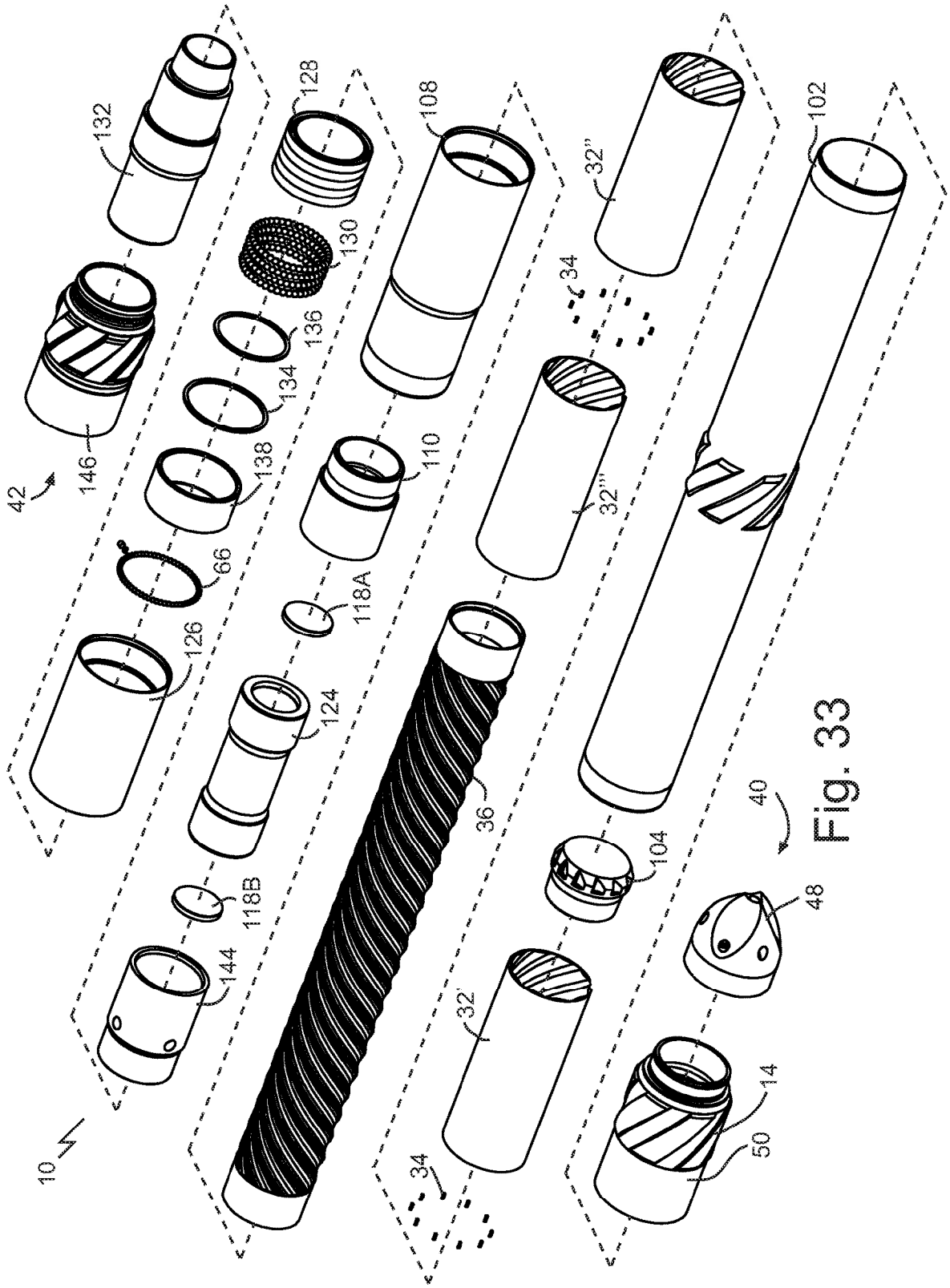
10
42
146
132
128
130
136
134
138
66
126
124
118B
144
108
110
118A
36
34
32'
32'''
32''
102
104
48
14
50
40

Fig. 33

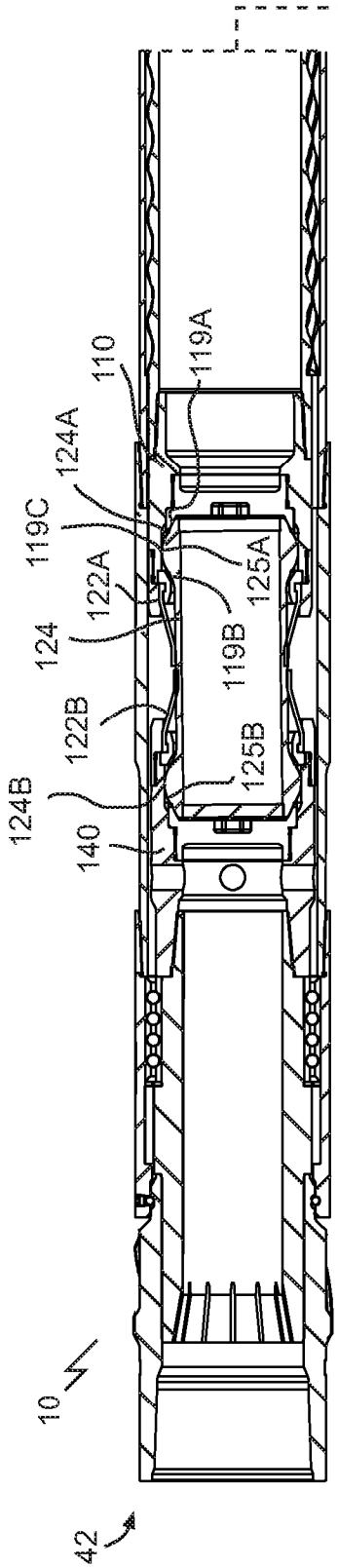

Fig. 34A

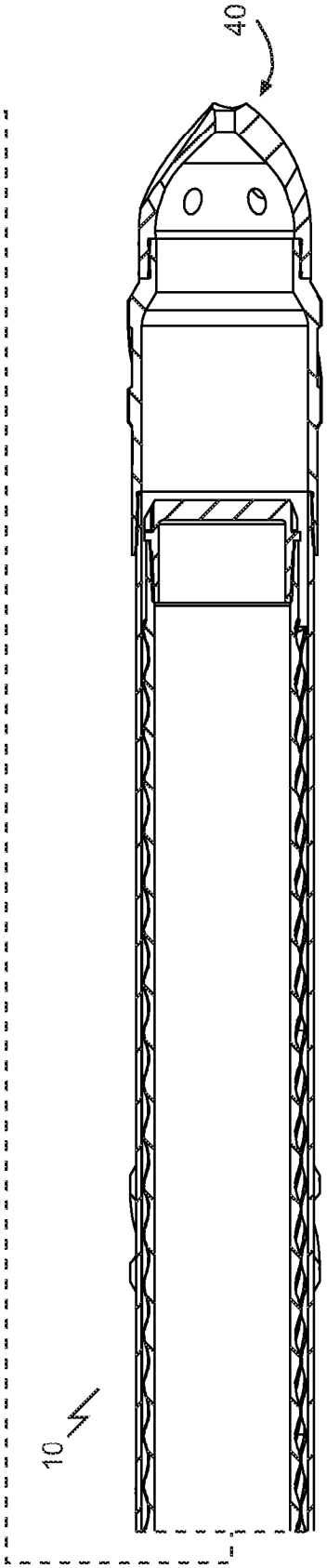

Fig. 34B

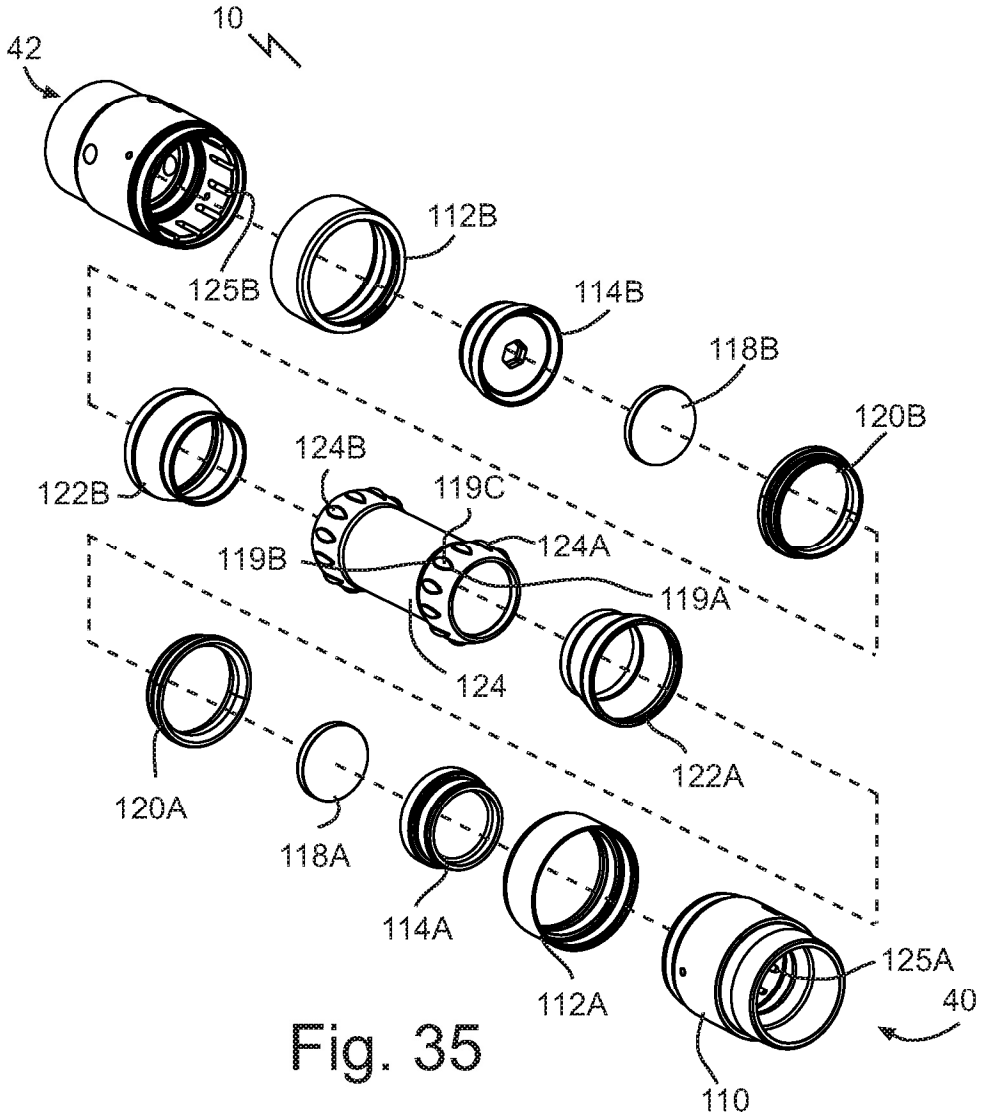
10
42
112B
125B
114B
118B
120B
124B
122B
119C
124A
119B
119A
124
122A
120A
118A
114A
112A
125A
40
110

Fig. 35

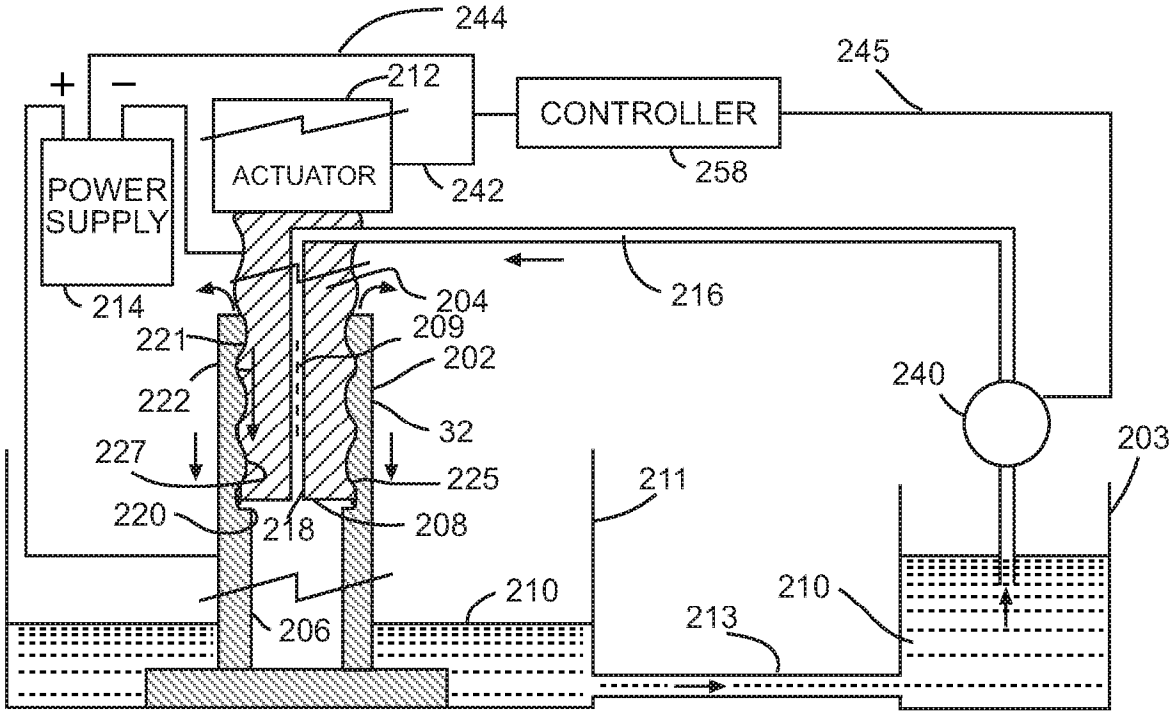
244
245
+
−
212
CONTROLLER
POWER SUPPLY
ACTUATOR
242
258
214
204
216
221
209
202
222
240
32
203
227
225
211
220
218
208
210
210
206
213

Fig. 36

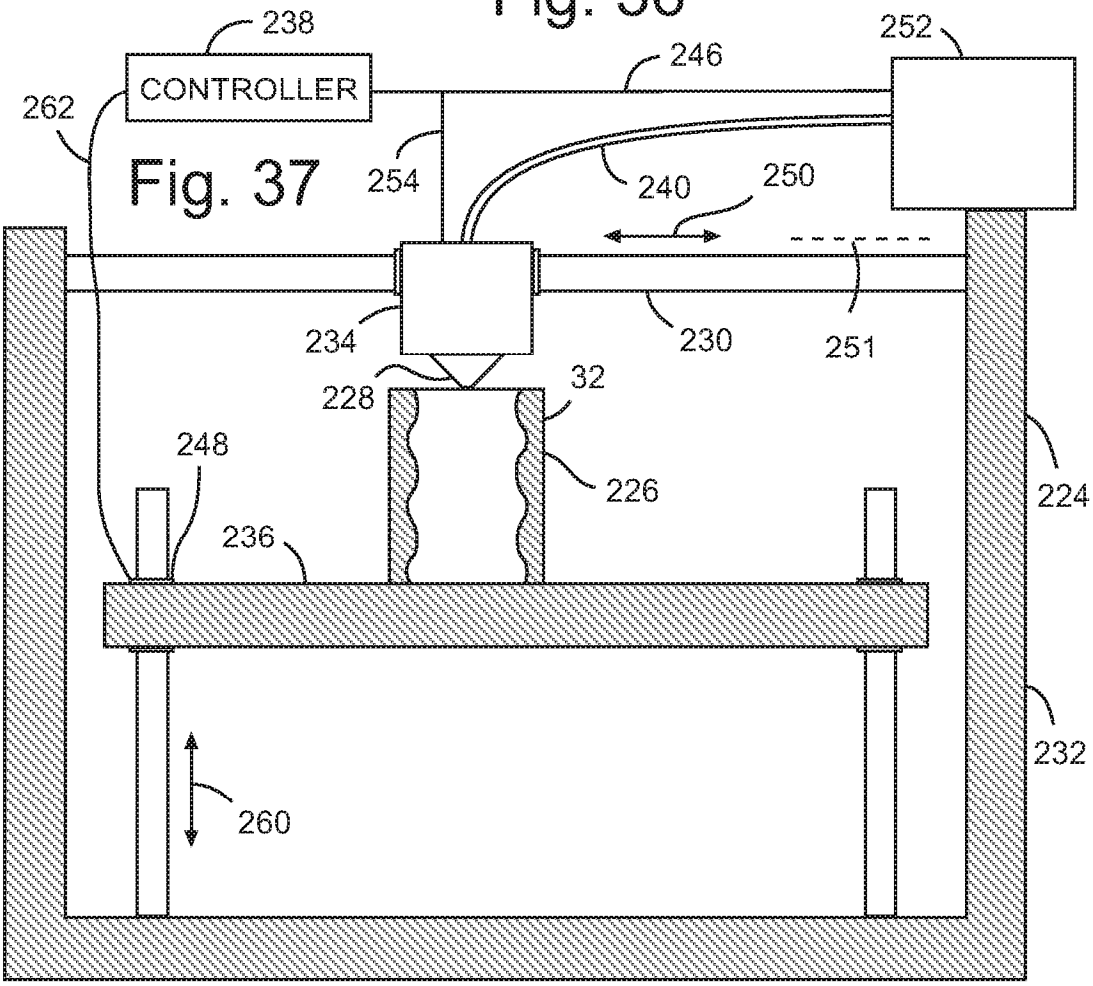
238
252
246
CONTROLLER
262
254
240
250
234
230
251
228
32
248
226
224
236
232
260

Fig. 37

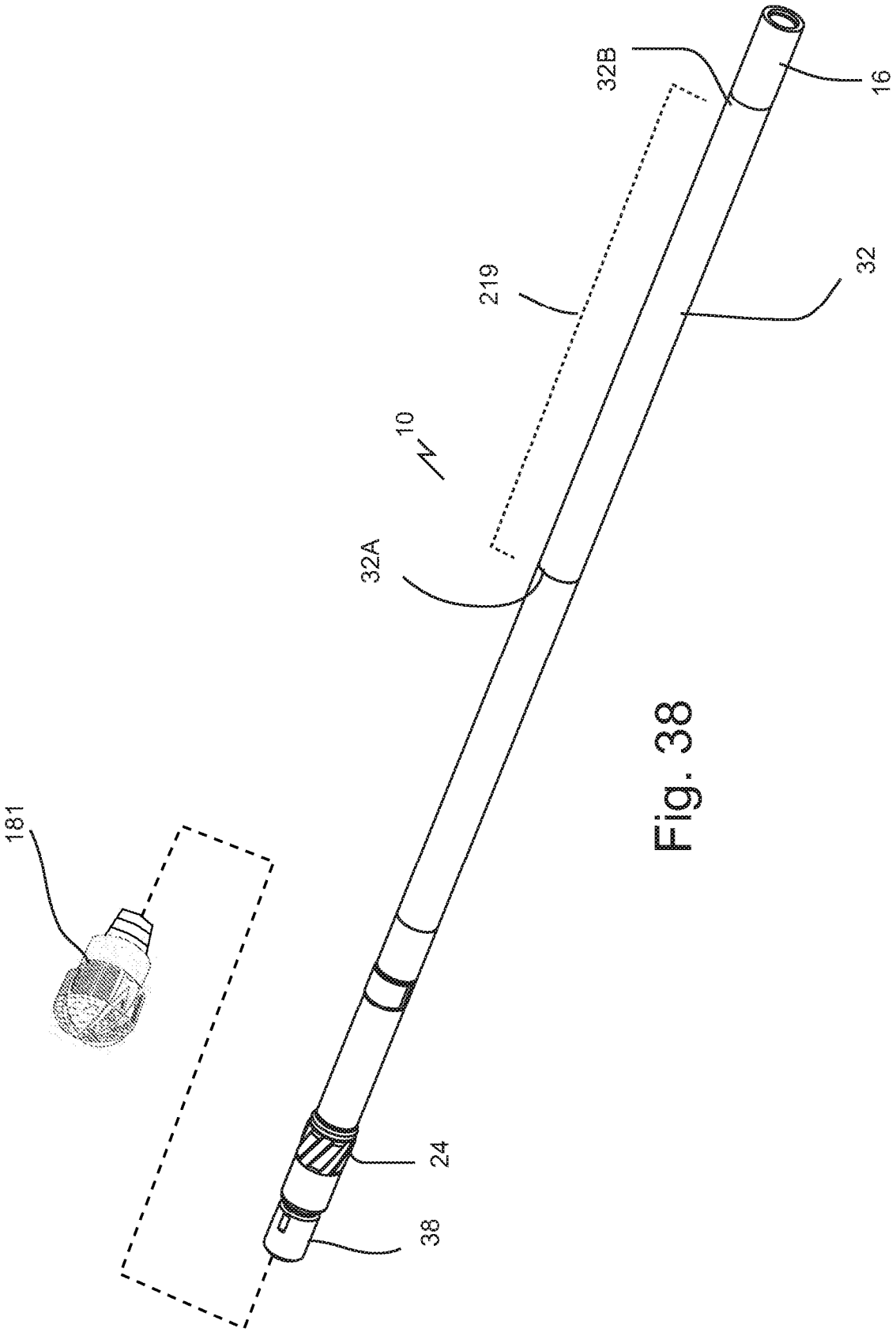

Fig. 38

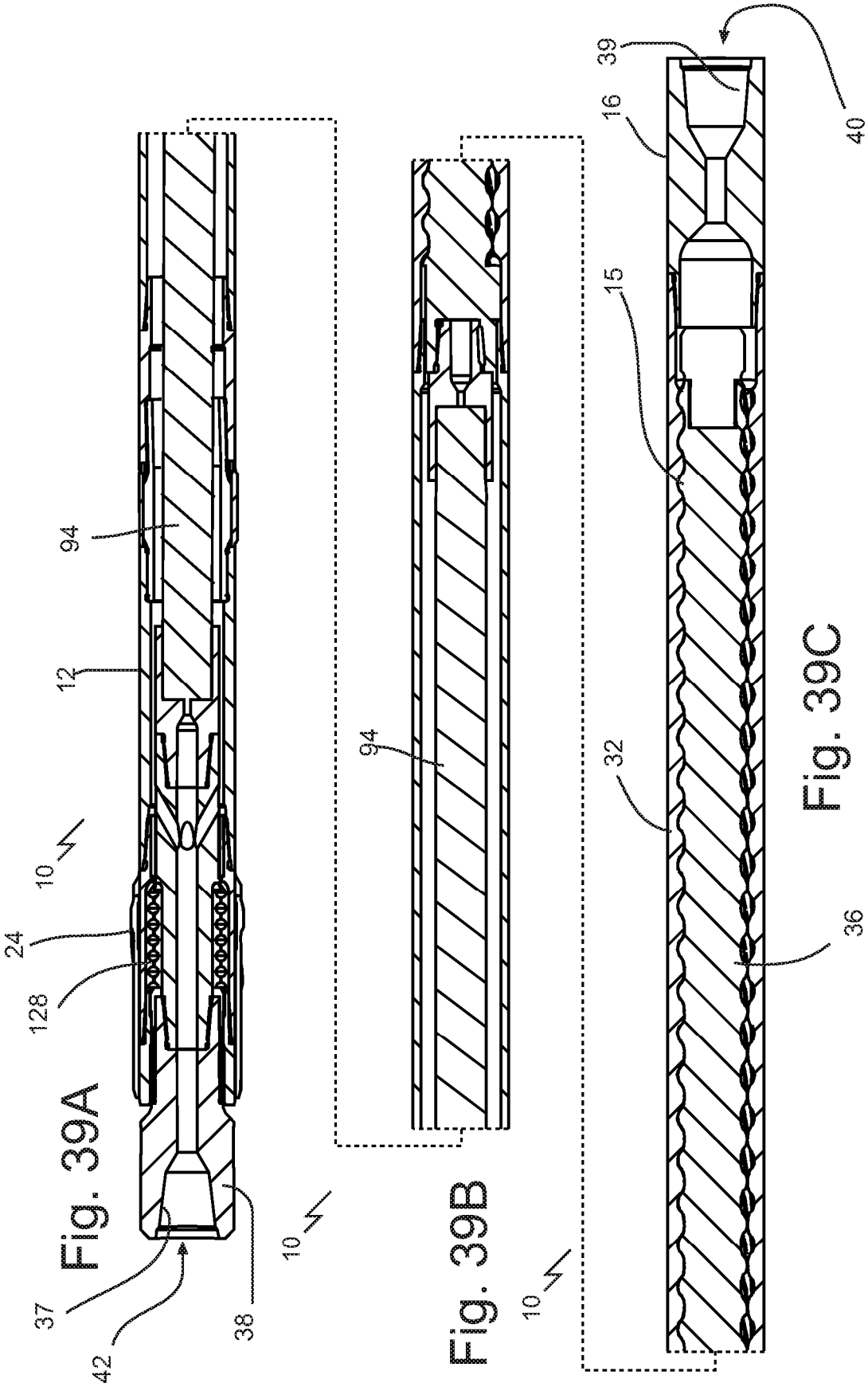

Fig. 39A

Fig. 39B

Fig. 39C

DOWNHOLE TOOLS WITH PROGRESSIVE CAVITY SECTIONS, AND RELATED METHODS OF USE AND ASSEMBLY

TECHNICAL FIELD

This document relates to downhole tools with progressive cavity sections, and related methods of use and assembly.

BACKGROUND

Progressive cavity sections, such as power sections and pumps are used in downhole tools, particularly in drilling and production applications. Casing reamer shoes have been used with a progressive cavity power section to achieve a reaming function. Multi-part stators are known, as are non-elastomeric stators. Counter-weighted, hollow stators are known. Drilling motors and other drilling tools use progressive cavity sections. U.S. Pat. Nos. 6,241,494, 4,764,094, 5,221,197, United States patent publication nos. 2010/0032170 and 2010/0038142, and French patent no. 2,349,729 provide some examples of such tools.

SUMMARY

A downhole tool is disclosed comprising: a progressive cavity section with a stator and a rotor; and in which the stator, the rotor, or the stator and the rotor are formed by electrochemical machining (ECM).

A method is disclosed comprising: forming a stator, a rotor, or the stator and the rotor by electrochemical machining (ECM); and forming a downhole tool by inserting the rotor into the stator.

A downhole tool is disclosed comprising: a progressive cavity section with a stator and a rotor; and in which the stator is formed from a single integral block of material, and the stator has a length of at least fifty inches defined between axial ends of the stator.

A method is disclosed comprising: forming a stator from a single integral block of material, in which the stator has a length of at least fifty inches defined between axial ends of the stator; and assembling a downhole tool by inserting a rotor into the stator.

A downhole tool is disclosed comprising: a progressive cavity section with a stator and a rotor; and in which the stator is formed by plural axial stator sections connected end to end, and adjacent axial stator sections, of the plural axial stator sections, are connected by dowels.

A method is disclosed comprising: forming a stator by connecting plural axial stator sections together end to end using dowels between the plural axial stator sections; and assembling a downhole tool by inserting a rotor into the stator.

A downhole tool is disclosed comprising: a progressive cavity section with a stator and a rotor; and in which the stator is formed by three dimensional printing.

A method is disclosed comprising: forming a stator by three dimensional printing; and assembling a downhole tool by inserting a rotor into the stator.

A method is disclosed comprising: forming a hollow rotor sleeve; forming a stator by three dimensional printing; and inserting the hollow rotor sleeve into the stator to form a progressive cavity section.

A downhole reamer tool is disclosed, comprising: a tubular body defining an interior passageway between an uphole end and a downhole end of the tubular body; and a reamer part mounted to the tubular body between the uphole end and the downhole end, the reamer part being mounted to rotate, relative to the tubular body, around a circumferential path about an outer-facing surface of the tubular body upon application of fluid flow within the interior passageway.

A method is also disclosed comprising: positioning a tubing string downhole in a well, the tubing string including a reamer tool; and pumping fluid through the tubing string to rotate a reamer part, of the reamer tool, relative to an uphole end tubing connector and a downhole end tubing connector of the reamer tool.

A casing reamer shoe is also disclosed comprising: a progressive cavity section with a stator and a rotor; a reamer part mounted to be rotated by the stator or the rotor; and in which the rotor is formed by a hollow helically lobed sleeve.

A method is also disclosed comprising: positioning a casing string downhole in a well, with a downhole end of the casing string mounting a casing reamer shoe; and pumping fluid through the casing string to operate a progressive cavity section of the casing reamer shoe to rotate a reamer part of the casing reamer shoe, in which a rotor of the progressive cavity section is formed by a hollow helically lobed sleeve.

A downhole reamer tool is also disclosed comprising: a progressive cavity section with a stator and a rotor, with the rotor having an uphole end tubing connector, and the stator mounted to rotate relative to the rotor upon application of fluid flow between the rotor and the stator; and a reamer part mounted to be rotated by the stator.

A casing or drill string with a downhole reamer tool is also disclosed.

A method is also disclosed comprising: positioning a tubing string downhole in a well, with the tubing string mounting a downhole reamer tool; and pumping fluid through the tubing string to operate a progressive cavity section, which has a stator and a rotor, with a reamer part connected to rotate relative to the stator, in which pumping fluid causes the stator and reamer part to rotate relative to the tubing string and the rotor.

A casing reamer shoe comprising: a tubular body with an uphole end tubing connector defining an interior passageway; a reamer part mounted to rotate relative to the tubular body at a first speed under fluid flow in the interior passageway; and a nose mounted to rotate relative to the tubular body at a second speed under fluid flow in the interior passageway, the first speed being different than the second speed.

A method is also disclosed comprising: positioning a casing string downhole in a well, with a downhole end of the casing string mounting a casing reamer shoe; and pumping fluid through the casing string to rotate a reamer part and a nose, both of the casing reamer shoe, at a first speed and a second speed, relative to an uphole end tubing connector of the casing reamer shoe, with the first speed being different than the second speed.

A casing reamer shoe is also disclosed comprising: a tubular body; the tubular body having a progressive cavity section with a stator and a rotor; a reamer part connected to be rotated by the stator or rotor; and a universal joint connected between the reamer part and the rotor, or between the rotor and a bearing on the tubular body, the universal joint being structured to convert eccentric motion of the rotor into concentric motion.

A method is also disclosed comprising: positioning a casing string downhole in a well, with a downhole end of the casing string mounting a casing reamer shoe; and pumping fluid through the casing string to operate a progressive cavity section of the casing reamer shoe to rotate a reamer

part, in which a universal joint connects between the reamer part and a rotor of the progressive cavity section, or between the rotor and a bearing on the casing reamer shoe, the universal joint being structured to convert eccentric motion of the rotor into concentric motion.

A downhole reamer tool is also disclosed comprising: a tubular body with an uphole end tubing connector defining an interior passageway; a reamer part mounted to rotate relative to the tubular body; an impeller mounted within the tubular body and connected to rotate the reamer part; and the interior passageway having a plurality of radial passageways that direct fluid through the interior passageway in a radial direction against the impeller to drive the impeller and rotate the reamer part.

A method is also disclosed comprising: positioning a tubing string downhole in a well, with the tubing string mounting a downhole reamer tool; and pumping fluid through the tubing string to direct fluid through a plurality of radial passageways in a radial direction against an impeller, of the downhole reamer tool, to drive the impeller and rotate the reamer part, relative to the downhole reamer tool.

A method is also disclosed comprising: forming a hollow rotor sleeve; forming a stator by three dimensional printing; and inserting the hollow rotor sleeve into the stator to form a progressive cavity section.

A casing reamer shoe is disclosed comprising: a progressive cavity section with a stator and a rotor; a reamer part mounted to be rotated by the stator or the rotor; and in which rotor contacting surfaces of the stator, and stator contacting surfaces of the rotor, are rigid during use.

A casing reamer shoe comprising: a progressive cavity section with a stator and a rotor; a reamer part mounted to be rotated by the stator or the rotor; and in which the stator is formed by plural axial stator sections connected end to end, and adjacent axial stator sections, of the plural axial stator sections, are connected by dowels.

After drilling is completed for a particular section of a well, casing may be put down the hole to create a smooth interior bore through which additional work may be completed. However, the hole may not be perfect and often includes defects that can stop the casing from going all the way down. Accordingly, a reamer tool, the operating tip of which is usually called a shoe, may be put towards the bottom to ream out the hole as the casing slides down. In one non-limiting embodiment, there is a reamer system, device, and/or mandrel assembly that is, advantageously, a low-cost system that attaches to any of a great variety of shoes (e.g. float shoe, reamer shoe, guide shoe) from a variety of manufacturers. Such a system may include an internal/central axle that rotates inside a housing and/or includes a pin-down connection (e.g. pin to pin, box-pin) to couple to a shoe so it can connect to any tool/shoe. The internal axle may spin when fluid is pumped through the mandrel assembly and spins a sub that is connected to the shoe which therefore also spins. The internal axle and/or other centrally positioned parts may comprise of an aluminum and/or zinc alloy (or other material that may be drilled through rather easily, since the mandrel assembly is generally left at a bottom of the hole when the casing is finished being installed). There may be a power section, such as an internal corkscrew shaped set of blades/lobes that cause the internal axle to rotate and thus cause the tool to rotate when fluid is pumped through the housing that contains the corkscrew.

A reaming power assembly is disclosed, comprising: a) an inner mandrel having spiral lobes disposed on an outer surface thereof; b) an outer mandrel disposed around the inner mandrel and having spiral lobes disposed on an inner surface of the outer mandrel; and c) a spacing between the outer surface of the inner mandrel and the inner surface of the outer mandrel through which fluid may be pumped to generate torque therebetween; wherein at least one of the inner and outer mandrel is free to rotate.

A reaming tool is disclosed functionally coupled to an end of the assembly such that torque therefrom may be used to rotate the reaming tool.

A reaming device is disclosed comprising: a) a hollow inner mandrel having spiral lobes disposed on an outer surface thereof; b) an outer mandrel disposed around the inner mandrel and having spiral lobes disposed on an inner surface of the outer mandrel; and c) a spacing between the outer surface of the inner mandrel and the inner surface of the outer mandrel through which fluid may be pumped to generate torque therebetween; wherein at least one of the inner and outer mandrel is free to rotate; wherein the outer mandrel has a number of spiral lobes equal to the number of spiral lobes of the inner mandrel plus one.

A stabilized accentuated reamer is disclosed, comprising: a) a power section having a rotor and a stator; b) a stator outer housing having a bladed profile; and c) a drill string.

A reaming system is disclosed, comprising: a) an inner mandrel having spiral lobes disposed on an outer surface thereof; wherein the inner mandrel is hollow; wherein the hollow of the inner mandrel is sized large enough to freely pass a standard drill bit therethrough; b) an outer mandrel disposed around the inner mandrel and having spiral lobes disposed on an inner surface of the outer mandrel; c) a spacing between the outer surface of the inner mandrel and the inner surface of the outer mandrel through which fluid may be pumped to generate torque therebetween; wherein at least one of the inner and outer mandrel is free to rotate; wherein the outer mandrel has a number of spiral lobes equal to the number of spiral lobes of the inner mandrel plus one; wherein one of the inner and outer mandrel is nonrotatably coupled to an end of a casing and the other is non-rotatably coupled to a bit or shoe; d) an upper flow diverter that diverts fluid flow from a center region of the reaming assembly to the spacing between the inner and outer mandrels; e) a lower flow diverter that diverts fluid flow from the spacing between the inner and outer mandrels to a center region of the reaming assembly; f) an upper and lower bearing assemblies rotatably coupled between the inner and outer mandrels; g) an elongated tubular housing, including: g1) a first end having a fluid inlet aperture; g2) a second end, opposite the first end, having a fluid outlet aperture; and g3) a coupling structure at the first end of the housing that selectably mates with a bottom end of a casing tube; h) a first bearing pack disposed circumferentially about the first end of the housing; i) a reaming tool functionally coupled to the inner mandrel or outer mandrel such that torque therefrom rotates the reaming tool; and j) a casing tube coupled to the housing.

In various embodiments, there may be included any one or more of the following features: Rotor contacting surfaces of the stator, and stator contacting surfaces of the rotor, are rigid. The stator contacting surfaces and the rotor contacting surfaces are made of metal. Rotor contacting surfaces of the stator are defined by an elastomeric coating within the stator. The progressive cavity section is connected to rotate a reamer part of a casing reamer shoe. The progressive cavity section is connected to rotate a drill bit. The drill bit may be a polycrystalline diamond compact (PDC) or rotary drill bit. The stator has a length of at least fifty inches defined between axial ends of the stator. The stator has a length of at least fifty inches defined between axial ends of the stator.

The stator has a length of at least eighty inches defined between axial ends of the stator. The stator has a length of at least one hundred and fifty inches defined between axial ends of the stator. The stator has a length of at least three hundred inches defined between axial ends of the stator. The stator is formed by ECM. Forming the stator, rotor, or the stator and the rotor by ECM further comprises advancing a cutting tool into or over a workpiece along an axis of the workpiece, with a sidewall of the cutting tool having a helically lobed profile, in which advancing is carried out while: an electrical field is established across a gap defined by the sidewall of the cutting tool and a sidewall of the workpiece; an electrolytic solution flows through the gap; and the cutting tool rotates about the axis such that the sidewall of the workpiece takes on a shape that is the inverse of the helically lobed profile of the sidewall of the cutting tool. Securing the dowels between adjacent plural axial stator sections using adhesive. Sliding an outer sleeve around the stator to form an interference fit between the stator and the outer sleeve. A progressive cavity power section with a stator and a rotor, with the progressive cavity power section connected to rotate the reamer part. The reamer part is mounted or formed on an external part of the stator, and the stator is connected to rotate relative to the tubular body. The rotor is fixed in relation to the uphole end and the downhole end of the tubular body. The interior passageway is connected to a fluid inlet of the progressive cavity section; and the interior passageway includes a power section bypass between an uphole end and a downhole end of the progressive cavity power section. The power section bypass is coaxial with the tubular body. The fluid inlet comprises a plurality of radial passageways that direct fluid through the interior passageway in a radial direction. The plurality of radial passageways comprise a plurality of diverter ports, which are angularly spaced from one another about a reamer tool axis, in which the diverter ports are oriented to have decreasing distance from the downhole end of the tubular body when moving from an entry to an exit of each of the plurality of diverter ports. The interior passageway is connected to a fluid outlet of the progressive cavity section. The fluid outlet and the fluid inlet are defined through the rotor. The reamer part is mounted on respective bearings at an uphole end and a downhole end of the reamer part. The respective bearings comprise bearing packs. The respective bearings are exposed to fluid within the interior passageway during use. Rotor contacting surfaces of the stator, and stator contacting surfaces of the rotor, are rigid during use. The stator contacting surfaces and the rotor contacting surfaces are made of metal. The stator is formed by plural axial stator sections connected end to end. Adjacent axial stator sections, of the plural axial stator sections, are connected by dowels. Adhesive securing the dowels between adjacent axial stator sections. The plural axial stator sections are held together within an outer sleeve, with an interference fit between the plural axial stator sections and the outer sleeve. The stator is formed as a single piece by three dimensional printing. Respective tubing connectors at the uphole end and the downhole end of the tubular body. The reamer part comprises one or more of reamer blades and polycrystalline diamond cutters. The reamer part comprises reamer blades configured to act as stabilizer blades to center the downhole reamer tool within a well. The reamer part comprises a sleeve mounted coaxial with the tubular body. A casing or drill string comprising the reamer tool. The tubing string is a drilling string or a casing string. The tubing string is a drilling string. The drilling string comprises a fluid-actuated drilling motor and a drill bit, both located in a downhole direction relative to the reamer tool, and in which pumping fluid through the tubing string causes the fluid-actuated drilling motor to rotate the drill bit relative to the reamer tool. The tubing string remains angularly stationary while pumping fluid to rotate the reamer part. A hollow interior, defined by the hollow helically lobed sleeve, is closed. A wall within the hollow interior. Opposed axial ends of the hollow helically lobed sleeve are blocked by respective end walls. An uphole facing surface of the wall is striated. Rotor contacting surfaces of the stator, and stator contacting surfaces of the rotor, are rigid during use. The stator contacting surfaces and the rotor contacting surfaces are made of metal. The stator is formed by plural axial stator sections connected end to end. Adjacent axial stator sections, of the plural axial stator sections, are connected by dowels. Adhesive securing the dowels between adjacent axial stator sections. The plural axial stator sections are held together within an outer sleeve, with an interference fit between the plural axial stator sections and the outer sleeve. An inner diameter of the hollow helically lobed sleeve is sized to be commensurate with an inner diameter of the casing. A hollow interior, defined by the hollow helically lobed sleeve, is closed. Pumping cement through the casing reamer shoe and up an annulus defined between the well and the casing string. Drilling out the casing reamer shoe. An uphole facing surface of the tool is striated. A stator of the progressive cavity section is formed by plural axial stator sections connected end to end. Prior to positioning the casing string downhole, assembling the casing reamer shoe by connecting adjacent axial stator sections, of the plural axial stator sections, with dowels. Assembling further comprises using an adhesive to glue the dowels between adjacent axial stator sections. Assembling further comprises sliding an outer sleeve around the plural axial stator sections, to form an interference fit between the plural axial stator sections and the outer sleeve. Sliding is carried out while one or both of a) the plural axial stator sections are cooled below, and b) the outer sleeve is heated above, room temperature. An inner diameter of the hollow helically lobed sleeve is sized to be commensurate with an inner diameter of casing of the casing string. Forming a casing reamer shoe, and further comprising a nose forming a downhole end of the casing reamer shoe, in which the stator is connected to rotate the nose. The casing reamer shoe defines an interior passageway that supplies fluid to the progressive cavity section and to outlet ports within the nose. The outlet ports include outlet ports directed in one or both of axial and radial directions. A tubular body defining the uphole end tubing connector and mounting the rotor; and a stabilizer mounted to the tubular body. A universal joint connected between the rotor and a bearing on the tubular body, the universal joint being structured to convert eccentric motion of the rotor into concentric motion. A first motor connected to rotate the nose relative to the tubular body; and a second motor connected to rotate the reamer part relative to the tubular body. The first motor comprises a progressive cavity section with a stator and a rotor; and the second motor comprises an impeller. The stator is connected to the tubular body, and the rotor is connected to rotate the nose. The interior passageway has a plurality of radial passageways that direct fluid in a radial direction against the impeller to drive the impeller and rotate the reamer part. A progressive cavity section with a stator and a rotor, in which the stator or the rotor is connected to rotate the reamer part or the nose. An impeller connected to rotate the reamer part or the nose. The first speed is faster than the second speed. The nose is structured as one or both a drill bit or a reamer. The interior passageway is connected

to supply fluid to outlet ports within the nose. The outlet ports include outlet ports directed in one or both of axial and radial directions. Pumping fluid to operate a progressive cavity section of the casing reamer shoe to rotate one or both the reamer part and the nose. Pumping fluid further comprises pumping fluid to operate an impeller to rotate one or both the reamer part and the nose. Pumping fluid further comprises supplying fluid to outlet ports within the nose to spray jets of fluid into the well from the nose. The first speed is faster than the second speed. The cooperating circumferential arrays of splines mesh via a circumferential array of pins. Each pin, of the circumferential array of pins, is tapered with decreasing radius from a central portion to each axial end of the pin. The cooperating circumferential arrays of splines comprise a radially-outward facing array of splines and a radially-inward facing array of splines. The cooperating circumferential arrays of splines are located at or near a first axial end of the shaft; and the shaft connects to the reaming part, or to a bearing on the tubular body, via a second set of cooperating circumferential arrays of splines, which are located at or near a second axial end of the shaft. The shaft is a hollow shaft sleeve. A hollow interior, defined by the hollow shaft sleeve, is closed. The universal joint is connected between the reamer part and the rotor. The universal joint is connected between the rotor and a bearing on the tubular body. The rotor is formed by a hollow helically lobed sleeve. The impeller comprises a circumferential array of fins on a radially inward facing surface of a sleeve that mounts the impeller to the tubular body. The circumferential array of fins are oriented parallel with an axis of the downhole reamer tool. The plurality of radial passageways are defined by slots in respective axial faces of each of a plurality of ring plates stacked axially one on the other. Each slot is curved or angled to eject fluid at non-zero angles relative to a radius defined by the respective ring plate and passing through a fluid exit end of the slot. The plurality of ring plates are stacked around a cylindrical wall of and coaxial with a collar, in which the plurality of radial passageways are defined from a central bore of the collar through the cylindrical wall of the collar. A pair of flanges, secured to or formed by the collar, compress the plurality of ring plates on the collar. An uphole flange of the pair of flanges connects to the tubular body. The cylindrical wall has an out-of-round circumferential profile that meshes with a corresponding inner circumferential profile of the plurality of ring plates. The out-of-round circumferential profile is polygonal. The impeller is connected to rotate the nose. The nose comprises one or more of blades and polycrystalline diamond cutters. The tubular body further comprises a progressive cavity section connected to rotate the nose independent of the rotation of the reamer part by the impeller. A wire brush scraper on an external surface of the downhole reamer tool. The progressive cavity section is connected to rotate a reamer part of a casing reamer shoe. The outer mandrel has a number of spiral lobes equal to the number of spiral lobes of the inner mandrel plus one. One of the inner and outer mandrel is non-rotatably coupled to an end of a casing and the other is non-rotatably coupled to a bit or shoe. An upper flow diverter that diverts fluid flow from a center region of the reaming assembly to the spacing between the inner and outer mandrels. A lower flow diverter that diverts fluid flow from the spacing between the inner and outer mandrels to a center region of the reaming assembly. The inner mandrel is hollow. The hollow of the inner mandrel is sized large enough to freely pass a standard drill bit therethrough. Upper and lower bearing assemblies rotatably coupled between the inner and outer mandrels. A) an elongated tubular housing, including: a1) a first end having a fluid inlet aperture; a2) a second end, opposite the first end, having a fluid outlet aperture; and a3) a coupling structure at the first end of the housing that selectably mates with a bottom end of a casing tube. A casing tube coupled to the housing. One of the inner and outer mandrel is non-rotatably coupled to an end of a casing and the other is non-rotatably coupled to a bit or shoe. An upper flow diverter that diverts fluid flow from a center region of the reaming assembly to the spacing between the inner and outer mandrels. A lower flow diverter that diverts fluid flow from the spacing between the inner and outer mandrels to a center **5** region of the reaming assembly. The hollow of the inner mandrel is sized large enough to freely pass a standard drill bit therethrough. Upper and lower bearing assemblies rotatably coupled between the inner and outer mandrels. A) an elongated tubular housing, including: a1) a first end having a fluid inlet aperture; a2) a second end, opposite the first end, having a fluid outlet aperture; and a3) a coupling structure at the first end of the housing that selectably mates with a bottom end of a casing tube; b) a first bearing pack disposed circumferentially about the first end of the housing; and c) a reaming tool functionally coupled to the motor. A casing tube coupled to the housing.

These and other aspects of the device and method are set out in the claims, which are incorporated here by reference.

BRIEF DESCRIPTION OF THE FIGURES

Embodiments will now be described with reference to the figures, in which like reference characters denote like elements, by way of example, and in which:

FIG. **1** is a perspective view of a downhole reamer tool with a progressive cavity power section.

FIGS. **2**A and **2**B collectively form a cross-section view of the downhole reamer tool of FIG. **1**.

FIG. **3** is an exploded perspective view of the downhole reamer tool of FIG. **1**.

FIG. **4** is a perspective view of a casing reamer shoe with an impeller-powered reamer.

FIGS. **5**A and **5**B are front and rear perspective views, respectively, of a discharge ring plate of the casing reamer shoe of FIG. **4**.

FIG. **6** is an exploded perspective view of the casing reamer shoe of FIG. **4**.

FIG. **7** is a cross-section view of the casing reamer shoe of FIG. **4**.

FIG. **8** is a section view taken along the **8-8** section lines of FIG. **7**.

FIG. **9** is a section view taken along the **9-9** section lines of FIG. **7**.

FIG. **10** is a perspective view of a further embodiment of a casing reamer shoe an impeller-powered reamer.

FIG. **11**A is a section view taken along section lines **11**A-**11**A of FIG. **10**.

FIG. **11**B is a section view taken along section lines **11**B-**11**B of FIG. **10**.

FIG. **12** is a perspective view of a discharge ring plate of the casing reamer shoe in FIG. **10**.

FIG. **13** is a cross-section view of the casing reamer shoe of FIG. **10**.

FIG. **14** is an exploded perspective view of the casing reamer shoe of FIG. **10**.

FIG. **15** is a perspective view of a further embodiment of a casing reamer shoe with a progressive cavity power section and an impeller-powered reamer.

FIGS. **16**A, **16**B and **16**C collectively form a cross-section view of casing reamer shoe of FIG. **15**.

FIG. **17** is an exploded perspective view of the casing reamer shoe of FIG. **15**.

FIG. **18** is a perspective view of a further embodiment of a casing reamer shoe with a progressive cavity power section.

FIGS. **19**A and **19**B collectively form a cross-section view of the casing reamer shoe of FIG. **18**.

FIG. **19**C is close up side elevation view of a drive pin from the universal joint of the embodiment of FIG. **19**A.

FIG. **20** is an exploded perspective view of the casing reamer shoe of FIG. **18**.

FIG. **21** is a perspective view of a further embodiment of a casing reamer shoe with a progressive cavity power section.

FIGS. **22**A and **22**B collectively form a cross-section view of the casing reamer shoe of FIG. **21**.

FIG. **23** is an exploded perspective view of the casing reamer shoe of FIG. **21** with a progressive cavity power section.

FIG. **24** is a perspective view of a further embodiment of a casing reamer shoe with a progressive cavity power section.

FIGS. **24**A and **24**B are enlarged detail perspective views of portions, circled in dashed lines, of the illustration of casing reamer shoe of FIG. **24**.

FIG. **25** is a cross-section view through the upper flow diverter of the casing reamer shoe of FIG. **24**.

FIG. **26** is a section view taken along the **26-26** section lines of FIG. **24**.

FIG. **27** is a perspective view of a further embodiment of a casing reamer shoe.

FIG. **28** is a side elevation view of a casing reamer shoe in use in horizontal well.

FIG. **29** is a perspective view of a further embodiment of a casing reamer shoe with an impeller-powered reamer and a casing scraper wire brush.

FIGS. **30**A and **30**B collectively form a cross-section view of the casing reamer shoe of FIG. **29**.

FIG. **31** is a perspective view of a further embodiment of a casing reamer shoe with a progressive cavity power section.

FIGS. **32**A and **32**B collectively form a cross-section view of the casing reamer shoe of FIG. **31**.

FIG. **33** is an exploded perspective view of the casing reamer shoe of FIG. **31** with a progressive cavity power section.

FIGS. **34**A and **34**B collectively form a cross-section view of the casing reamer shoe of FIG. **35**.

FIG. **35** is an exploded perspective view of a further embodiment of a casing reamer shoe with a progressive cavity power section.

FIG. **36** is a schematic view, partially in section, of an electrochemical machining method used to form a stator.

FIG. **37** is a schematic view, partially in section, of a three dimensional printing method used to form a stator.

FIG. **38** is a perspective exploded view of a drilling motor and a drill bit.

FIGS. **39**A-C collectively form a cross-section view of the drilling motor of FIG. **38**.

DETAILED DESCRIPTION

Immaterial modifications may be made to the embodiments described here without departing from what is covered by the claims.

In a typical power section of a positive displacement fluid motor used in drilling a wellbore that traverses subterranean hydrocarbon bearing formations, power generation is based upon the Moineau pump principle. In this type of motor design, a stator and rotor assembly converts the hydraulic energy of a pressurized circulating fluid to the mechanical energy of a rotating shaft. The rotor and stator are typically of a helically lobed design, with the rotor and stator having a corresponding helically lobed profile with plural helical lobes. The rotor is generally formed from steel or another suitable metal having one less lobe than the stator, which is typically lined with an elastomer layer.

In general, the power section may be categorized based upon the number of lobes and effective stages. The rotor and stator lobes may have a helical configuration defining plural stages, with each stage equating to the linear distance of a full wrap of the stator helix. The rotor and stator lobes and helix angles may be selected such that the rotor and stator seal at discrete intervals, which results in the creation of axial fluid chambers or cavities that are filled by the pressurized circulating fluid. The action of the pressurized circulating fluid causes the rotor to rotate and precess within the stator. Motor power characteristics are generally a function of the number of lobes, lobe geometry, helix angle and number of effective stages. Motor output torque is directly proportional to the differential pressure developed across the rotor and stator. In drilling operations, bit rotation speed is directly proportional to the circulating fluid flow rate between the rotor and stator.

Progressive cavity sections, such as pumps or motors, or used in downhole contexts other than drilling. For example, a progressive cavity pump may be used at the end of a sucker rod string in a production well. Similarly, cutting and servicing tools, as well as well perforating and stimulation tools may incorporate progressive cavity sections.

A reamer is a type of rotary cutting tool used to clean and in some cases enlarge the size of a previously formed hole, generally to leave the sides of the hole sufficiently smooth for later purposes. The process of cleaning or enlarging the hole may be called reaming. Reamers take many forms and may be designed for use as a hand tool or in a machine tool, such as a milling machine or drill press, in drilling system for drilling for oil, and/or in other earth drilling contexts, and others. In the context of drilling for oil, immediately after a hole is drilled, the hole may lack a clean, smooth profile suitable for casing.

Drilling may alter the characteristics of the surrounding formation and produce a void with respect to pressure, and water content. In some cases chemical interactions may occur by exposure of materials surrounding the hole to the air. Further, natural layering, fissures, and fracture lines may react differently to the hole than the surrounding material. Accordingly, such newly-drilled holes may end up with discontinuities that make it difficult to operate the hole as desired. Reamer systems may be used in such and other contexts to make the sides of the hole sufficiently smooth for continued operation. Also, in completion operations reaming is followed with installation of a casing string that prevents further distortion of the surrounding material from intruding on the working portion of the hole.

Casing may refer to steel pipe that is landed within the well and cemented in place during wellbore construction in order to stabilize the wellbore. The casing string may be made up of a plurality of casing sections, which are threaded together and collectively extend from the surface to a landing point within an open hole. The base of the casing string may contain a shoe, which may operate as one or more

of a reamer, guide, or float shoe. Once in position the casing may be cemented in place. Once casing is installed, the wellbore may be further extended by drilling through the casing shoe using a drill bit of a relatively smaller inner diameter than the diameter of the casing that is drilled through. Once drilling is complete, a subsequent casing string is run from surface to extend from the bottom of the previous casing string to the bottom of the further drilled open hole. Once installed, the subsequent casing string is cemented in place. The process can be repeated to further extend the wellbore, leading to a situation where the wellbore thus comprises a series of concentric casing strings of gradually decreasing inner diameter extending to great depths and distances within the formation.

Casing is usually selected to have an outer diameter that is commensurate with an open hole diameter. A float shoe may be used to guide the casing toward the center of the hole to minimize the impact of rock ledges or washouts in obstructing the travel of the casing string as the casing is run into the wellbore. The float shoe functions to assist in cementing operations, and may be constructed of a drillable material to permit the float shoe to be drilled through if the well is to be deepened beyond the casing landing point. If a casing string gets snagged on an obstruction in the well, the entire string may become jammed, holding up the completion operation and requiring extensive and expensive intervention operations. A reamer thus works synergistically with the running of a casing string to obliterate and remove obstructions in the wellbore, improving ease of casing travel through the well, reducing the chance of a stuck casing string, and all the while cleaning and polishing the wellbore to prepare same for cementing and completion. The nature of a reamer shoe as a reamer usually means that the reamer is wider than or equal to the outer diameter (OD) of the casing string, and thus difficult or impossible to remove from the well if run into the well with a casing string. Thus, a casing reamer shoe may be left at the bottom of the hole and drilled out if required.

Reaming a deviated well, such as a horizontal well, may present additional challenges relative to a vertical well. For example, it may be a challenge to slide a string of mandrels, pipes and others, inside the dogleg or toe part of the hole, as the weight of such units may rest against the side of the hole, creating friction. Such friction may increase the difficulty to advance a drill or reamer during horizontal operation, and may increase the chance of a casing string getting stuck or otherwise hung up prior to landing.

Referring to FIG. **28**, a method of using a downhole tool **10**, such as a reamer tool as shown, to cut the final size and finish of a horizontal drill hole is illustrated. Generally, a reamer tool will not make the original hole, but instead, will enlarge and/or clean or otherwise smooth the interior wall of a previously drilled or bored hole. In some cases, the reamer tools disclosed here may be used as part of a drilling operation, however. The illustrated reamer tool **10** may be supported at a downhole end of a casing **172**, which is supported by a suitable rig structure such as a derrick **170**. The reamer tool **10** may be disposed within a well bore **176**. The derrick **170** may include suitable structure and devices to operate the reamer tool **10** and to permit the incremental addition of casing sections to the casing string as the reamer tool **10** works its way in a downhole direction through the wellbore **176**. The reamer tool **10** may advantageously allow for the wellbore **176** to be reamed and lined with a casing **172** for future production and stimulation operations.

Referring to FIG. **28**, derrick **170** may comprise a lifting device such as a guyed mast, for example a gin pole, which may be articulated over a load by adjusting its guys. The term derrick may include the framework supporting a drilling apparatus in an oil well drilling or completion rig. The illustrated derrick comprises a crown block **178**. The illustrated crown block **178** may be functionally coupled to a traveling block **180** that travels vertically within the derrick **170**. A crown block may form a stationary section of a block and tackle system that contains a set of pulleys or sheaves through which the drill line **182** (wire rope) may be threaded and positioned opposite and above traveling block **180**. Traveling block **180** is the freely moving section of a block and tackle system that contains a set of pulleys or sheaves through which the drill line (wire rope) may be threaded and positioned opposite (and under) the crown block (the stationary section). The combination of the traveling block **180**, crown block **178** and wire rope drill line **182** may produce the ability to lift string weights in the hundreds of thousands of pounds. On larger drilling rigs, when raising and lowering derrick **170**, line tensions over a million pounds are not unusual.

Referring to FIG. **28**, the rig may comprise sufficient surface pumping equipment to operate the fluid-actuated reamer tool **10**. Derrick **170** may comprise a motor **184** or other power source that may be used to operate one or more pumps, winches, drills, and/or the like and combinations thereof. The motor **184** may be used to pump fluid through the casing **172** and through reamer tool **10** to cause the reamer tool **10** to rotate at high speeds and with sufficient torque to effectively ream the hole or wellbore **176**.

Derrick **170** may also include a blowout preventer **186** functionally coupled around a top of the wellbore **176**. The blowout preventer **186** may comprise a large, specialized valve or similar mechanical device, usually installed redundantly in stacks, used to seal, control and monitor an oil and gas well. Blowout preventers were developed to cope with extreme erratic pressures and uncontrolled flow (formation kick) emanating from a well reservoir during drilling. A kick may lead to a potentially catastrophic event known as a blowout. In addition to controlling the down hole (occurring in the drilled hole) pressure and the flow of oil and gas, s blowout preventer is intended to prevent tubing (e.g. drill pipe and well casing), tools and drilling fluid from being blown out of the wellbore (also known as the bore hole, the hole leading to the reservoir) when a blowout threatens. A blowout preventer improves the safety of crew, rig (the equipment system used to drill a wellbore) and environment, and are used in the monitoring and maintenance of well integrity. Blowout preventers are intended to provide fail-safety to the systems that include them.

Referring to FIG. **28**, the reamer tool **10** may be coupled to the bottom or downhole end of the casing **172** in a variety of suitable manners, including but not limited to mating threads, snap-fits, friction fitting, adhesives, bolts, and the like and combinations thereof. The reamer tool **10** may function with or as a shoe, which is the operating component that interfaces with the interior of the hole to be reamed and abrades away material, thereby reaming the hole. The shoe may include protrusions that, when the shoe spins, impact with non-cylindrical regions of the interior of the hole and thereby abrade the same making such regions smoother and increasing the effective interior diameter of the same so that the casing can follow behind the shoe without getting stuck.

The STAR—Stabilized Accentuated Reamer

Referring to FIGS. **1** and **2**A-B, a downhole reamer tool **10** is depicted comprising a reamer part **14** and a tubular body **12**. An interior passageway **160** may be defined between a downhole end **40** and an uphole end **42** of tubular

body **12**. Reamer part **14** may mount to tubular body **12** between the uphole end **42** and the downhole end **40**, for example at a location where axial ends **14**C, **14**D, of the reamer part **14**, and in the example shown axial ends **32**A, **32**B of the stator **32**, are spaced from both ends **40** and **42** of body **12**. Referring to FIGS. **1**, **2**A-B, and **3**, reamer part **14** may be mounted to rotate, relative to the tubular body **12**, for example around an outer circumferential path, such as path **13** (FIG. **1**), about an outer-facing surface **200** of the tubular body **12**. FIGS. **2**A-B, reamer part **14** may rotate upon application of fluid flow within interior passageway **160** of the tubular body **12**. Fluid flow may comprise the flow of drilling fluid or other suitable fluids, such as water or invert, through at least a portion of tool **10** from uphole end **42** to downhole end **40**.

Referring to FIG. **1**, reamer part **14** may be mounted in a suitable fashion to rotate relative to tubular body **12**. Reamer part **14** may be mounted to rotate via a suitable mechanism such as bearings (for example ball bearings, slide bearings, thrust bearings, or bearing surfaces), parts comprising sacrificial material, and others. Tubular body **12** may comprise tubing connectors **37** and **39** at the downhole end **40** and the uphole end **42**, respectively. Tubing connectors **37** and **39**, such as threaded pin and box ends as shown, may connect to part of the tubing string, such as casing string **173** or drilling string, including tools that make up the string. During use, body **12** may remain angularly stationary, while reamer part **14** may rotate relative to body **12**, under fluid flow. In cases where body **12** is rotating, for example if the tubing string is rotating, body **12** may rotate at a relatively faster rate relative to tubular body **12** than the tubing string. Reamer part **24** may mount to a motor housing sleeve **26** and in the example shown housing sleeve **26** rotates with reamer part **24**.

Referring to FIG. **1**, the exterior of tool **10** may comprise a suitable reamer part **14**. For example, a bladed profile with helical reamer blades **28** extending radially outwardly from a maximum outer diameter (OD) of the casing, tool or drill string may be used. The relative rotation caused by the fluid pumped through the interior passageway **160** may cause the reamer blades **28** to rotate and thereby ream the hole about the location of the tool within the drill hole. Reamer blades **28** may be configured to act as stabilizer blades when the reamer part **14** is not rotating, to center tool **10** within the drill hole or well.

Referring to FIG. **2**A, a motor **15**, such as a mud motor or progressive cavity power section (PC motor), may be connected to rotate the reamer part **14**. PC motor **15** may use fluid flow to create rotational motion, in the power section **17**, and such motion may be transferred to the reamer part **14**. The power section **17** of PC motor **15** may comprise an outer mandrel such as a stator **32** and an inner mandrel such as rotor **36**.

Referring to FIGS. **2**A and **3**, in some cases, the outer mandrel comprises a stator **32**, and the inner mandrel comprises a rotor **36**. Rotor **36** may comprise helical lobes **41** that extend from an exterior surface of rotor **36**. Stator **32** may comprise opposing helical lobes **33** that extend from an interior surface of stator **32** that faces helical lobes **41** of the rotor **36** after assembly. There may be a region between the rotor **36** and the stator **32** that is spaced and shaped to permit fluid to flow between from one axial end of the PC motor **15** to the other. The spiral lobes **33**, **41** may be mismatched such that they rotate against each other when fluid is pumped through the space between them and generate vibration (notation) as one rotates past the other. When the number of nodes on the rotor is one less than the number of nodes on the stator, the rotation may induce a vibration to reamer tool **10** and may help tool **10** overcome frictional forces and assist the blades **28** on an exterior of the stator **32** to cut through earth or rock. Motor **15** may comprise any suitable fluid-moving motor or pump. In some cases, PC motor **15** operates by rotating the outer mandrel relative to the inner mandrel, while in other cases, PC motor **15** rotates the inner mandrel relative to the outer mandrel. Lobe differentials, such as two or more lobes on the stator than on the rotor, may be used.

Referring to FIGS. **2** and **3**, stator **32** may have a suitable shape. Stator **32** may be formed by plural axial stator sections connected end to end. Stator **32** may comprise adjacent stator housing sections **32'-32"**. Stator housings **32'-32'"** may comprise an aperture or plurality of apertures **155** each sized to fit a single dowel **34**. Dowels **34** may connect and fix one stator housing sections **32'-32'"** to one or more of adjacent stator housing sections **32'-32'"**. The plural axial housing sections **32'-32'"**. Dowels may be secured to stator housing sections **32'-32'"** by adhesive, such as LOCTITE™ or another suitable adhesive.

Referring to FIG. **3**, the plural axial housing sections **32'-32'"** may be connected end to end. The plural axial stator sections **32-32'"** may be held together within an outer sleeve **46**, which holds the sections by a suitable mechanism, such as an interference fit between the plural axial stator sections **32'-32'"** and the outer motor sleeve **46**. The interference fit may be sufficiently tight to transmit torque during use between stator **32** and reamer part **14**. In some cases a zero or positive interference fit may be used. Assembly of stator sections **32'-32'"** may comprise sliding the outer motor sleeve **46** around the plural axial stator sections **32'-32'"**, to form the interference fit. Sliding may be carried out while one or both of a) the plural axial stator sections are cooled below, and b) the outer motor sleeve is heated above, room temperature. For example, dry ice may be loaded within sections **32'-32'"** after connection by dowels, and the sleeve **46** may be heated with a torch or other suitable mechanism. Next, the stator **32** may be hoisted in the air by a lifting mechanism such as a crane, and lowered into the sleeve **46**. Upon returning to room temperature, the parts contract and expand and grip one another. At room temperature it may be impossible to physically separate the stator **32** and sleeve **46**.

Referring to FIG. **3**, rotor contacting surfaces **188** of the stator **32**, and stator contacting surfaces **190** of the rotor **36**, may comprise rigid material, such as metal. Rigid includes non-elastomeric materials, and materials that do not flex when in use at downhole temperatures. Sealing may be achieved by carefully machining the surfaces **188** and **190** to achieve a sufficiently narrow clearance/negative interference fit to form an efficient pumping seal without seizing the unit. In some cases one or more of surfaces **188** and **190** are treated or coated to protect and increase the longevity of the tool **10**. The coating may be a bearing material with a coefficient of kinetic friction that is less than or equal to 0.2 in relation to steel. The bearing material may have a coefficient of kinetic friction that is less than 0.1, in relation to steel. Other bearing materials with higher coefficients of friction may be used. The bearing material may comprise a non-metal. The bearing material may comprise one or both nylon or ultra-high-molecular-weight polyethylene. The coating on one or more surfaces **188** and **190** may be applied to a thickness that will not change the rigid characteristics of each surface, so that the surfaces **188** and **190** still act as a metal on metal seal. An appropriate thickness, for example a thin coating with a diameter of 1/100 thousandth of an inch may be used, although thicknesses greater or smaller may be

used. The coating may be applied by spraying on one or more surfaces **188** and **190**. The coating may be cured in an oven to set. The coating may reduce or prevent corrosion, for example if an anti-corrosion agent is used. In some cases, anti-corrosion paint, such as a polytetrafluoroethylene-based paint, may be applied either alone or in combination with the coating. The coating may act as lubrication during operation of stator **32** and rotor **36**. In some cases, surface **188** and/or surface **190** comprise an elastomeric material, such as rubber.

Referring to FIGS. **2**A-B, during use, fluid, such as drilling fluid, may be pumped from an uphole end **42** through the motor **15** to and out the downhole end **40**. Motor **15** may comprise a fluid inlet **150** connected to the interior passageway **160**. Fluid may pass through interior passageway **160**, which in some cases extends from uphole end **42** through the uphole facing end **36**A of rotor **36** to the fluid inlet **150**. Fluid inlet **150** may provide an access point for fluid to travel to the helical lobes **33** and **41** of the motor **15**. Fluid inlet **150** may comprise a plurality of diverter ports **151**. Diverter ports **151** may be angularly spaced from one another about a reamer tool axis **153**. Diverter ports **151** may be oriented to have decreasing distance from downhole end **42** when moving from an entry **151'** to an exit **151"** of each of the plurality of diverter ports **151**. Interior passageway **160** may comprise a motor bypass **148** that diverts a portion of the fluid from traveling to fluid inlet **150** and onto the power section **177**. Motor bypass **148** may be defined by rotor **36**. In some cases motor bypass **148** is coaxial with the tubular body **12**. Fluid may exit from the power section **17** via a fluid outlet **15** of the motor **15**. Fluid outlet **157** may direct fluid flow from the space between the stator **32** and rotor **36** to the interior passageway **160**. Fluid outlet **157** may comprise a plurality of diverter ports **159**, that are angularly spaced from one another about axis **153**, in which ports **159** are oriented to have increasing distance from downhole end **42** when moving from an entry **159'** to an exit **159"** of each of the plurality of diverter ports **159**.

Referring to FIGS. **2**A-B and **3**, reamer part **14** may mount to the tubular body **12** via suitable bearings, such as bearing pack **149**, roller or slide bearings. Rotor **36** may comprise bearing packs **149** that rotatably couple the rotor **36** to the stator **32**. Bearing packs **149** may be replaced with any coupling structure that allows for rotational coupling, including but not limited to: ball bearings, roller bearings, ball thrust bearings, roller thrust bearings, tapered roller bearings, magnetic bearings, linear bearings, anti-friction bearings, rotary bearings, telescopic bearings, rotary unions, and the like and combinations thereof tool **10** may be completely sealed from wellbore fluids and pressure, such that fluid does not exit the exterior of the tool **10**, but instead is restricted to flow-through. Bearing pack **149** may comprise sealing ring **22**A that seals between the rotor and the stator. Sealing ring **22**A may provide a dynamic seal, which is a seal that maintains a seal during rotation of stator **32** and reamer housing sleeve **26**. During rotation, pack **149** may be exposed to circulated fluid within the interior passageway **160**. Circulated fluid may be used to cool the bearings by the sealing mechanism. Sealing ring may define teeth or fins **21** that interlock with opposing, complimentary teeth **19** defined by an end cap **18**A. End cap **18**A and seal ring **22**A may rotate with the stator **32**. A corresponding bearing pack **149** may be located on either end of the motor **15**. Pack **149** may comprise outer load collar **20**A and inner load collar **24**A that distribute the load from a tubing string, such as a casing string or drill string, to the rotor **36**. Pack **149** may be a plurality of bearing assemblies that secure axial ends of rotor **36** to the uphole end **42** and downhole end **40** of the tubular body **12**. The plurality of bearing assemblies may have matching parts, such as end caps **18**A, **18**B, seal rings **22**A, **22**B, outer load collars **20**A, **20**B, inner load collars **24**A, **24**B and others. Other mechanisms of securing rotor **36** to uphole end **42** and downhole end **40** may be used, such as an induced fit between complimentary features, adhesive, such as LOCTITE™, and others.

Referring to FIG. **3**, reamer part **14** may be mounted or formed on an external part of stator **32**. Reamer part **14** may comprise a sleeve, such as a sleeve formed by reamer housing sleeve **26**. Reamer housing sleeve **26** may be mounted coaxial with the tubular body **12**. Reamer part **14** and reamer housing sleeve **26** may be secured to rotate with stator **32** during operation of PC motor **15**.

Referring to FIG. **1**, reamer tool **10** may be configured for use in an oilfield application, for example as a drilling enhancement or for drilling applications. Reamer tool **10** may be used in drilling through unstable ground conditions. In the process of drilling, reamer tool **10** may be carried down casing pipe to the hole to protect the wall to achieve drilling work. Reamer part **14** may comprise one or more of reamer blades **28** and polycrystalline diamond cutters **30**. Reamer tool **10** may include a rotor and a stator rotatably coupled to each other (e.g. by operation of the illustrated pair of bearing packs disposed between the rotor and stator near opposite ends of tool **10**), wherein the stator envelopes the rotor. As used herein, neither "rotor" nor "stator" implies rotational movement or fixed positioning.

Tool **10** may be coupled to a drill string used to drill earth/rock, such as but not limited to for drilling oil wells. Tool **10** may couple between sections of a tubing string, such as a casing or drilling string, such that fluid that is pumped through the string goes through tool **10** as well. The rotor **36** may be fixedly coupled to coupling subs **38**, **16** at each ends **40**, **42**, respectively to allow the tool **10** to couple to the tubing string between segments of such. The tubing string, including tool **10**, may be positioned downhole in a well and fluid may be pumped through the tubing string to rotate the reamer part **14**. The drilling string may comprise a fluid-actuated drilling motor **15** and a drill bit (not pictured), both located in a downhole direction relative to the tool **10**. Pumping fluid through the tubing string may cause motor **15** to rotate the drill bit relative to tool **10**. While pumping fluid, the tubing string may remain angularly stationary to rotate the reamer part. Toole **10** may be used in a casing application as well.

The fluid may be diverted from the core of the drill string to a region between the rotor **36** and stator **32** of tool **10**. In such a region, the fluid causes the rotor **36** and stator **32** to rotate relative to each other (generally only one will rotate and the other stays in fixed angular relation to the rest of the string). The rotor **36** and stator **32** are attached to the string in such a way as to cause the rotational force created by the pumped drilling fluid to be applied only to the stator **32**, thereby causing it to rotate. The stator housing sections **32'-32'"** may comprise a bladed profile that may be beveled unto the base pipe OD to ensure that the leading edge is less aggressive and the ensuing cutting action and torque generated is gradual. This profile is both upward directional and downward directional since it is designed to be used to ream both downwards and upwards (forwards and backwards, for horizontal drilling/reaming).

Tool **10** may be used for horizontal drilling, as the friction between the drill string and the bottom arc of the drill hole (where the drill string rests because of gravity) may be a tremendous friction force to overcome. This may make the

horizontal well more difficult to drill, especially when the hole shifts, swells, cracks, fills-in, etc. Rotating the reamer tool **10** without having to rotate the whole drill string may improve the efficiency and utility of tool **10** in horizontal wells.

The illustrated tools **10** may be suited for rigs with sufficient hydraulic power to drill but where torque limitations on either surface equipment or string components or both, limit string rotation to combat hole problems. Example hole problems include tight spots, swelling shales and/or wellbore collapse, where traditionally, the solution would have required backreaming. The illustrated tools **10** may allow the drilling team to ream regions having such problems without requiring. The reamer tools **10** disclosed here may be used to ream a hole as it is being drilled.

The STAR Stabilized accentuated reamer tool **10** may actuate with circulation. When fluid is circulated up to the threshold flow rate, the external sleeve starts to rotate clockwise looking downwards. Such rotation is irrespective of the rotation of the drill string. The stabilized accentuated reamer is self torque-generating due to the associated hydraulic power section that generates both torque and rotation. This family of tools may enable a drilling team to ream in and out of hole without string rotation making it a suitable reaming solution for tight spots, hole pack-offs, swelling shales, and all manner of wellbore instability related issues. Due to its unique internal power generation this tool may contribute lesser torque to the string in drilling mode that regular reamers or stabilizers.

String rotation may be used to increase the available torque at the stabilized accentuated reamer for rock destruction and deformation. Due to its offset dynamics and harmonics (i.e. vibration during operation) tool **10** is expected to reduce stick slip or drill string vibrations. The stabilized accentuated reamer may be bored in the centre (i.e. include a narrowed core between the two diversion channels that allows fluid to pass either through the core or the diversion channels) to ensure better signal transfer for telemetry systems that require to communicate using the internal fluid medium in the drill string.

Tool **10** may act as a conventional stabilizer as well as a reamer. According to one embodiment of the invention, there is a tool **10** stabilizer with reaming functions for drilling applications. The reaming stabilizer may be hydraulically powered without a need for the string to rotate. The stabilizer allows a user to ream out the hole as the user goes down. In addition, if the casing or drilling string gets stuck, the user may activate the stabilizer to back up and ream along the way up. The stabilizer may be cheaper, doesn't lose the drill string, faster, more convenient, is easier to use, and less likely to get stuck. According to one embodiment of the invention, there is a tool **10** stabilizing accentuated reamer including a sealed motor section (i.e. no fluid going in or out of the string), a reaming stabilizer having an outer surface with multiple bearing packs, a flow diversion channel, a lobe (allows for the rotation), a stator with one more lobe than the rotor (stator is the outside component and the rotor is the internal component, even though the rotor would typically be the one that moves and in this case the rotor does not move at all), and a narrowed central bore.

According to one embodiment of the invention, there is a tool **10** stabilizing accentuated reamer that fits between sections of the drilling string and attaches to them the same way the drilling string sections attached to each other. The rotor attaches to the string adapters. The stator may be coupled to the rotor via sealed bearing packs and is disposed around the rotor. The flow diversion channels do not block flow of the fluid through the center but instead allow for flow to also go between the stator and rotor and thereby interact to cause rotation of the stator. The exterior surface of the stator has stabilizing geometry and reaming geometry so that it simultaneously performs both functions. According to one embodiment of the invention, there is a tool **10** stabilizing accentuated reamer including a sealed motor section (i.e. no fluid going in or out of the string) (may have sealable ports), a reaming stabilizer including an outer surface (e.g. hard facing, tungsten carbide inserts, any cutting surface, laser cladding, diamond impregnated, etc.), a plurality of multiple bearing packs (e.g. 2, 3, 4, 5, 6+, sealed, upward and downward acting bearings, ball bearings, radial bearings, friction, etc.), a plurality of flow diversion channels (e.g. multiple, center bore is there to allow for telemetry signals, center bore is narrowed), a plurality of lobes that allow for the rotation (e.g. wherein the external array of lobes has one more lobe than the internal), and a stator with one more lobes than the rotor.

In operation, the drill team assembles the drill string as drilling occurs, and in doing so includes the tool **10** between two segments of the drill string. The tool **10** reams the hole as it is drilled and the drill string may be pushed/pulled as desired to engage the drill bit and the tool **10** in positions as needed and as appropriate. Telemetry signals may be transmitted through the drilling fluid through the drill string and may pass through the tool **10** without interference from the tool **10**.

The Hydra

Referring to FIGS. **4** and **7**, a downhole reamer tool **10** is illustrated having a tubular body **12**, a reamer part **14**, and an impeller **58**. The reamer part **14** may be mounted to rotate relative to the body **12**. The impeller **58** may be mounted within the tubular body **12** and connected to rotate the reamer part **14**. Referring to FIGS. **6** and **7**, the interior passageway **160** may have a plurality of radial passageways, such as apertures **55**, that direct fluid through the interior passageway **160** in a radial direction **167** (FIG. **7**) against the impeller **58** to drive the impeller **58** and rotate the reamer part **14**.

Referring to FIGS. **6-8**, the impeller **58** may take a suitable shape. Referring to FIGS. **7-8**, a radially-inward facing surface **58**A of a sleeve **59** of the impeller **58** may comprise a circumferential array of fins **58**B. The sleeve **59** may mount the impeller **58** to the tubular body **12**. The circumferential array of fins **58**B may be oriented parallel with an axis **61** of the downhole reamer tool **10**. Other orientations may be used, including orientations where fins **58**B form a helix that wraps at least partially around surface **58**A. In the example shown, with fins **58**B parallel to axis **61**, fluid flow expelled in radial directions against fins **58**B imparts a circumferential torque upon fins **58**B, causing fins **58**B to spin.

Referring to FIGS. **7-8**, the radial passageways to impeller **58** may be formed by slots **57** in plates **56**. The plurality of radial passageways may be at least partially defined by slots **57** in respective axial faces **57**A of each of a plurality of ring plates **56** that are stacked axially one on the other. In the example shown, slots **57** are formed on one axial face **57**A per plate **56**, although in other cases slots **57** may be formed on opposing faces **57**A. Each slot may have a suitable shape, for example slots **57** may be curved or angled to eject fluid along an ejection path **71**B at a nonzero angle **71** relative to a radius **71**A, which is defined by the respective ring plate **56** and passes through a fluid exit end **71**C of the slot **57**. In the example shown, the orientation, size, and number of slots **57** in each plate **56** is selected to balance fluid momen-

tum and ejection direction, to minimize vibration inducement by operation of impeller **58**. In the example shown, all slots **57** are identical to provide symmetry and to maximize torque imparted upon impeller **58**. Each slot **57** may align to receive fluid flow from a respective aperture **55** from an inner mandrel collar **54**. The use of a plurality of plates **56** with slots **57** stacked one on the other creates a structural that acts as a single unit but without the demands of machining same if such were machined from a single block of material. Each plate **56** may be individually machined or otherwise fabricated with complex slots that may be impossible to form within a solid block.

Referring to FIGS. **7** and **8**, the plates **56** may be mounted in a suitable fashion within the tool **10**. In the example shown the plurality of ring plates **56** are stacked around a cylindrical wall **54**A of and coaxial with a collar **54**. The plurality of radial passageways, including apertures **55**, may be defined from a central bore **166** of the collar **54** through the cylindrical wall **54**A of the collar **54**. Referring to FIG. **8**, the cylindrical wall **54**A may have an out-of-round circumferential profile, such as a polygonal profile **54**C, that meshes with a corresponding inner circumferential profile, such as a polygonal profile **56**B, of the plurality of ring plates **56**. Matching torque transfer profiles permit the parts to rotate together, and facilitate drill out.

Referring to FIGS. **6** and **7**, the plates **56** may mount on the collar **54** via a suitable mechanism. For example, a pair of flanges, **53**A and **53**B, secured to or formed by the collar **54**, may compress the plurality of ring plates **56** on the collar **54**. In the example shown, flange **53**A is formed as part of collar **54**, while flange **54**B is part of a static mandrel **60** that is threaded or press fit to an uphole end of collar **54**. The flange **54**B effectively forms an uphole flange of the pair of flanges **53**A, **53**B, and connects to the tubular body **12**, in this case indirectly via mandrel **60**.

Referring to FIGS. **6**, **7**, and **9**, the reamer tool **10** may form a casing shoe reamer, with a nose **48**. The nose **48** may be structured as one or both a drill bit or a reamer. In the example shown, the nose **48** functions in a drill bit capacity. For example, the lipstick-style nose **48** defines one or more blades or bladed edges **48**B that are positioned to act upon debris directly axially in the path of the nose **48** to pulverize and clear same out of the path of the tool **10**. In other cases a reaming blade or other device may by mounted to a peripheral part of nose **48**.

Referring to FIGS. **6** and **7**, drilling and cleaning action may also be achieved using outlet ports **72** in the nose **48**. Interior passageway **160** may connect from the impeller **58** to the outlet ports **72**, to produce fluid jets during use that act to remove, pulverize, and wash out debris in the wellbore. Referring to FIG. **7**, the outlet ports **72** may include outlet ports directed in one or both of axial direction, in the case of port **72**A, and radial directions, in the case of port **72**B.

Referring to FIGS. **6** and **7**, the impeller **58** may be connected to rotate the nose **48**, for example if nose **48** is threaded or press fitted to radial bearing **52**, which threads or is press fit to reamer housing **50**, which is mounted to rotate with impeller **58** relative to tubular body **12**, in this case top sub **70**. Top sub **70** may define an uphole tubing connector **37**, and may mount via bearings **66**A and **66**B to a dynamic sleeve **68**, which threads or is press fit to reamer housing **50**. The top sub **70** may thread or press fit to a static sleeve **64**, which connects via radial set screws **62** to static mandrel **60**. In some cases, instead of or in addition to set screws **62**, one or more locking split rings may be used within grooves that align during make up between sleeves **64** and **60**. In one case during assembly the sleeve **60** is press fit into sub **70**, sleeves **68** and **64** are then connected to sub **70**, and as sleeve **64** is connected to sub **70**, sleeve **64** positions the split ring or rings within the aligned grooves to mate sleeves **60** and **64**. An uphole facing surface of the tool **10**, for example surface **60**A of static mandrel **60**, may be striated, with striations **60**B, or may be otherwise contoured to improve drillability. Reaming part **14** may be mounted to reamer housing **50**.

Referring to FIG. **7**, in use, the tool **10**, which may be a casing shoe reamer as shown, may connect to a downhole end of a casing string. Fluid may pass down the casing string bore, and into passageway **160**, passing into central bore **166** of collar **54**, where the fluid is then diverted radially outward through apertures **55**. From apertures **55**, the fluid passes into slots **57**, and is channeled radially outward to strike against fins **58**B of impeller **58**, causing impeller **58** to rotate. The rotation of the impeller **58** causes housing **50**, reamer part **14**, and nose **48** to rotate. Referring to FIGS. **7** and **9**, fluid that exits a downhole end **58**D of impeller **58** passes radially outward via outlet ports **73** into the wellbore, and radially inward into nose **48** via axial ports **52**A in radial bearing **52**. Fluid entering the hollow nose **48** is then ejected outward into the wellbore via ports **72**. Fluid ejected out into the wellbore acts to pulverize and entrain debris, creating a swirling vortex along with the rotation of the nose **48** and reamer part **14**, to lift debris up off the well bottom and carry same to surface. The reaming action of the reamer part **14** acts to smooth and enlarge the wellbore, preparing same for installation of the casing string. An impeller may permit the tool **10** to achieve high rpm in a relatively axially short span of space.

Referring to FIGS. **10-13** and **29**, **30**A, and **30**B, two other embodiments of impeller-powered reamer tools **10** are illustrated. Referring to FIG. **10**, the tool **10** illustrated has many of the same features as tool **10** from FIG. **4**. However, the nose **48** is configured to act as a reamer, with reamer blades **47**. In addition, the reamer part **14** comprises relatively long, straight blades **49**. Referring to FIG. **12**, each plate **56** has six slots **57** instead of the three slots **57** found on the plates **56** of the embodiment of FIG. **4**. Referring to FIGS. **29**, **30**A, and **30**B, the embodiment of FIG. **10** is illustrated with the addition of a wire brush scraper sub **75** between the nose **48** and the reamer housing **50**. The scraper sub **75** acts as a casing scraper to polish the wellbore, and may include a plurality of brushes **75**A on an external surface of the sub **75**.

The Hydra Hybrid

Referring to FIG. **15**, a further embodiment of a downhole reamer tool **10** is illustrated. The tool **10** has the ability to rotate the reamer part **14** and the nose **48** at different speed relative to the tubular body **12**. Referring to FIGS. **16**A-C and **17**, the tool **10** also comprises a progressive cavity power section **15** connected to rotate the nose **48**, the reamer part **14**, or both. In the example shown the motor **15** is connected to rotate the nose **48** independent of the rotation of the reamer part **14** by the impeller **58**.

Referring to FIGS. **16**A-C, reamer part **14** and nose **48** may be mounted to rotate at different speeds relative to the tubular body **12**, in this case top sub **98** and stator **32**. The reamer part **14** may be mounted to rotate relative to the tubular body **12** at a first speed under fluid flow in the interior passageway **160**. The nose **48** may be mounted to rotate relative to the tubular body **12** at a second speed under fluid flow in the interior passageway **160**. The first speed may be different, for example faster, than the second speed. The example shown provides relatively higher torque and rpm than the embodiments of FIGS. **4** and **10**.

Referring to FIGS. **16**A-C and **17**, the tool **10** may incorporate plural motors to plural parts. For example, a first motor, such as PC motor **15**, may be connected to rotate the nose **48** relative to the tubular body **12**. Also, a second motor, such as impeller **58**, may be connected to rotate the reamer part **14** relative to the tubular body **12**. The PC motor **15** may comprise a stator **32** and a rotor **36**. The stator **32** may be connected to the tubular body **12**, for example rotationally fixed to the tubular body **12** as shown. The rotor **36** may be connected to rotate the nose **48**. In other cases the stator **32** may rotate the reamer part **14** and the rotor **36** may be rotationally fixed to body **12**. In some cases the PC motor **15** is connected to rotate the reamer part **14**, while the impeller **58** is connected to rotate the nose **48**. The nose **48** may comprise one or more of blades **47** and polycrystalline diamond cutters (not shown).

Referring to FIGS. **16**A-C and **17**, the tool **10** may have various parts. A top sub **98** may define an uphole tubing connector **37** at uphole end **42**. The top sub **98** may be threaded or press fitted to the stator **32**, which may be made of plural or a single stator sections (a single piece is illustrated). The stator **32** is threaded or press fitted to a drive housing **96**, which houses a drive shaft **94**, which transfers torque from rotor **36** to a mandrel such as a drive adapter **92**. Drive housing **96** may thread or press fit to a drive adapter sub **90**, which mounts the drive adapter **92** via bearings **66**B and **66**C, and threads or is press fit to static sleeve **86**. Bearings **66**D and **66**B mount dynamic sleeve **88**, which connects via threading or press fit to reamer housing **50**.

Referring to FIGS. **16**A, **16**B and **17**, rotor contacting surfaces **188** of the stator **32**, and stator contacting surfaces **190** of the rotor **36**, may comprise rigid material, such as metal. In some cases one or more of surfaces **188** and **190** may be treated or coated. An example treating method includes laser treatment. The coating may be a bearing material with a coefficient of kinetic friction that is less than or equal to 0.2 in relation to steel. The bearing material may have a coefficient of kinetic friction that is less than 0.1, in relation to steel. The bearing material may comprise a non-metal. The bearing material may comprise one or both nylon or ultra-high-molecular-weight polyethylene. In other cases, surface **188** and/or surface **190** comprise an elastomeric material, such as rubber.

In use, when the casing string is downhole in a well, fluid is pumped through the casing string into an uphole portion **160**A of the interior passageway **160**. Fluid enters a fluid inlet **161** at an uphole end of the motor **15**, travelling in a downhole direction through the motor **15** while imparting torque upon the rotor **36**. The rotation of rotor **36** causes the nose **48** to rotate. Fluid travels around drive shaft **94**, and passes via radially inward ports **95** into central bore **160**B in drive adapter **92**. Fluid then travels through bore **166** in collar **54**, passing through apertures **55** and slots **57** to strike and rotate the impeller **58**, causing reamer part **14** to rotate for reaming action. Fluid then travels into the wellbore via exit ports **73** in reamer housing **50**, and while some fluid passes radially inward into nose **48** via ports **160**C, Once in the rotating nose **48**, fluid may exit via a variety of fluid outlet ports **72**, jetting out at various angles to assist in drilling, reaming, and debris clean out to surface.

MRS—Motorized Reamer Shoe

Referring to FIGS. **18**-**27**, several embodiments of a reamer tool **10** are illustrated, with reamer parts **14** powered by a PC motor **15**. Referring to FIGS. **19**A and **24**, embodiments are shown where the stator **32** rotates relative to a stationary rotor **36**, thereby rotating the reamer part **14**. Referring to FIGS. **19**A, **22**A, and **24**, all embodiments incorporate a universal joint to convert eccentric rotor **36** motion into concentric motion to reduce vibration and increase tool **10** effectiveness. Referring to FIGS. **19**A and **22**A, embodiments are shown with a hollow helically lobed sleeve rotor **36**. Tools **10** may be used in suitable applications, such as deep water or deep well applications, as well as conventional wells.

Referring to FIGS. **19**A-**19**B, and **20** an embodiment is shown where the stator **32** rotates relative to the rotor **36**. The stator **32** may be mounted to rotate relative to the rotor **36** upon application of fluid flow between the rotor **36** and the stator **32**. The reamer part **14** may be mounted to be rotated by the stator **32**. The rotor **36** may be connected, for example rotationally fixed to the tubular body **12**, for example by press fit or an uphole end **36**A of rotor **36** threading to a rotor adapter **110**, which mates with a drive shaft **124**, which mates with a drive adapter **144**, which threads or press fits to a bearing shaft **132**, which threads or press fits to a casing adapter/top sub **140**. A downhole end **36**B of the rotor **36** may form a free cantilevered end. The stator **32** may be mounted to rotate relative to top sub **140**, which defines an uphole tubing connector **37**, by an uphole end **32**A of stator **32** threading or press fitting to a stator adapter **108**, which threads or press fits to an end cap **128**, which mounts upon bearing shaft **132** via bearings **66** and **130**. A downhole end **32**B of stator **32** threads or press fits to reamer housing **50**, which mounts reamer part **14** and reamer blades **47**.

Referring to FIGS. **19**A-B, the tool **10** may form a casing reamer shoe. A nose **48** may form a downhole end **40** of the casing reamer shoe, and the stator **32** may be connected to rotate the nose **48**. In use the tubing or casing string may be positioned downhole in a well. Fluid may be pumped through the casing string to operate the progressive cavity power section **15**, in which pumping fluid causes the stator **32** and reamer parts **14**A and **14**B to rotate relative to the string and the rotor **36**. In use, fluid enters a portion **160**A of the interior passageway **160** via connector **37**, is redirected through the PC motor **15**, where the stator **32** is actuated to rotate, and the fluid exits the downhole end **32**B of the PC motor **15** into a central bore **160**B of the reamer housing **50**, where the fluid then exits the reamer tool **10** via one or outlet ports **72** within the nose **48**, for example ports **72**A pointed in an axial direction, and ports **72**B pointed in a radial direction. One or more outlet ports **72** may comprise a nozzle **77** fitted and rated to create a fluid jet of controlled characteristics upon exit. A stabilizer **141**, which includes a centralizer, may be present on top sub **140**.

Referring to FIGS. **19**A-B and **20**, the rotor **36** may be mounted to a universal joint for correcting eccentricity of rotation of rotor **36**. A universal joint includes a coupling that can transmit rotary motion by a shaft over a range of angles. The universal joint **79** may be connected between the rotor **36** and a bearing, such as bearing shaft **132** mounted on ball bearings **130** and **66**, on the tubular body, in this case top sub **140**. The universal joint **79** may be structured to convert eccentric motion of the rotor **36** into concentric motion. Referring to FIGS. **22**A-B, an example is shown where the universal joint **79** is connected between the reamer part **14** and the rotor **36**.

Referring to FIGS. **19**A-B and **20**, the universal joint **79** may comprise a drive shaft **124**. The shaft **124** may be mounted for rotation within the tubular body **12**. The shaft **124** and the rotor **36** may mate via cooperating circumferential arrays of splines **124**A and **125**A, for example which mesh via a circumferential array of pins **116**A. The cooperating circumferential arrays of splines may comprise a

radially-outward facing array of splines **124**B, for example mounted on the drive shaft **124**, and a radially-inward facing array of splines **125**A, for example mounted on the rotor **36**, or in this case on a rotor adapter **110** that threads or press fits to an uphole end **36**A of the rotor **36**.

A pin and splined connection can be tailored to provide the required degree of conversion from eccentricity to concentricity. Referring to FIG. **19**C, each pin **116**A, of the circumferential array of pins **116**A, may be tapered with decreasing radius from a central portion **117**C to each axial end **117**A and **117**B of the pin **116**A. In the example shown the pin **116**A is beveled at each end **117**A, and **117**B. The shape used permits the pin **116**A to tip axially forward and backward, while still retaining a meshing connection with the splines. Such allows the shaft **124** and adapter **110** to translate radially and pivot relative to one another. Pins **116**A may be made of rigid material that does not deform under the relatively high temperatures experienced downhole. Rubberless or other metal on metal embodiments of the progressive cavity sections disclosed here may be used in high temperature downhole applications.

Referring to FIGS. **19**A-B and **20**, a second set of splines and pins may be present. The cooperating circumferential arrays of splines **124**A, **125**A may be located at or near a first axial end **129**A of the shaft **124**. The shaft **124** may connect to a bearing, in this case bearing shaft **132** mounted to ball bearings **130** and **66**, on the tubular body **12**, via a second set of cooperating circumferential arrays of splines **124**B, **125**B. The second set of splines may be located at or near a second axial end **129**B of the shaft **124**. A second array of pins **116**B may cooperate with splines **124**B, **125**B. Splines **124**B, **125**B, and pins **116**B may have the same characteristics as splines **124**A, **125**A, and pins **116**A, respectively.

Referring to FIG. **22**A-B, an example is shown where the drive shaft **124** and spline-pin universal joint **79** is located between the rotor **36**, in this case a downhole end **36**B of rotor **36**, and the reaming part **14**. Specifically, the downhole end **36**B threads or press fits to a rotor adapter **110**, which mates with drive shaft **124** via a spline and pin connection as above, and drive shaft **124** mates with a drive adapter **144** via a second spline and pin connection. Adapter **144** threads or press fits to bearing shaft **132**, which threads or press fits into reamer housing **50**, which mounts reamer part **14** and nose **48**.

Referring to FIGS. **19**A-B and **20**, each set of splines may be protected by a respective drive boot, in this case boots **122**A and **122**B, which mount via split rings **120**A and **120**B, and thrust seat caps **112**A, **112**B, to the rotor adapter **110** and the drive adapter **144**, respectively. The thrust seat caps **112**A, **112**B form caps that secure the split rings **120**A and **120**B and keep the boots **122**A and **122**B in position around shaft **124** to protection the spline and pin connections clean from fluids. Such structures also help to contain lubricating fluid, such as grease from washing out of the spline and pin connections. A port **219** and an NPT threaded plug **221** may be used for grease injection in each of adaptors **110** and **144**. Each of adaptors **110** and **144** may have a pair of plugs **221** and ports **219**, one to permit venting while the other is filled.

Referring to FIGS. **31**-**33**, a further embodiment of a reamer tool **10** is illustrated. In the example shown, a drive shaft **124** is used to act as a universal joint **79** between the rotor **36** and the bearings **138** and **66**. The drive shaft **124** may also be used on the downhole end of the rotor **36** similar to the embodiment of FIG. **21**. The axial ends **129**A and **129**B of the shaft **124** may be press fit with rotor adapter **110** and drive adapter **144**. The drive shaft **124** may be made of a resilient metal, which bends elastically during use to convert eccentricity to concentricity, for example titanium and other suitable metals. The drive shaft **124** may thus form a flex-shaft.

Referring to FIGS. **34**A, **34**B and **35**, a further embodiment of a reamer tool **10** is illustrated. In the example shown, a drive shaft **124** is used in a form that combines ideas from the splines of the embodiment of FIG. **19**A, with the pinless design of FIG. **31**. In the example the spline sets **124**A-**125**A and **124**B-**125**B mate directly in a gear to gear fashion. Referring to FIGS. **34**A-B and **35**, the spline-spline connection may be structured to permit radial translation and pivoting between parts, similar to the type of movement permitted by the beveled drive pins **116**A. The splines **124**A may be tapered with decreasing distance from a central portion **119**C to each axial end **119**A and **119**B of each spline **124**A, **124**B. The shape used permits the drive shaft **124** to tip axially forward and backward, while still retaining a meshing connection with the splines. Such allows the shaft **124** and adapter **110** to translate radially and pivot relative to one another. Boots **122**A and **122**B may also be used.

Referring to FIGS. **19**A-B, the drive shaft **124** may be a hollow shaft sleeve as shown. A hollow interior **131**, defined by the hollow shaft sleeve, may be closed, for example by end caps **118**A, B secured within respective drive caps **114**A, **114**B. A hollow drive shaft may reduce the weight of the tool **10**, and also may assist in drilling out the tool **10** when sacrificed at the bottom of a casing string. The inner diameter **133** may be selected to be commensurate with an inner diameter **173**A of the casing **172** being run with tool **10**.

Referring to FIGS. **19**A-B, in use a casing string **173** may be positioned downhole in a well. Fluid may be pumped through the casing string **173** and into an uphole portion **160**A of interior passageway **160**. Fluid may pass drive shaft **124** around an annulus defined between the drive shaft **124** and the stator adapter **108**, by moving through radial ports **135** in drive adapter **144**, passing around the shaft **124**, and entering the PC motor **15**. The fluid flow through motor **15** causes the stator **32** or rotor **36** (in this case the stator **32**) to rotate, and the universal joint **79** acts to convert eccentric motion of the rotor **36**, relative to the stator **32**, into concentric motion, thus reducing vibration, which may deleteriously affect reaming operation. Fluid passing through motor **15** in a downhole direction then moves into bore **160**B and out the ports **72** in the nose **48** as previously discussed above. Referring to FIGS. **19**A and **22**B, uphole and downhole facing surfaces **137** and **139**, respectively, may be structured, for example striated as shown, to improve drillability. In the example shown an surface **137** defines a striated uphole entry to bearing shaft **132**, to permit a drill bit to be able to grip and drill through the shaft **132** and the interior contents of the tool **10**.

Referring to FIGS. **19**A-B and **20**, the rotor **36** may form a hollow helically lobed sleeve as shown. The rotor **36** may define a hollow interior **36**C, which may be closed against fluid passage, for example via one or more walls. In the example shown opposed axial ends **36**A and **36**B of the hollow helically lobed sleeve are blocked by respective end walls, namely provided by rotor adapter **110** and rotor plug **104**. An uphole facing surface of the wall may be striated. A casing **172** may be connected, for example directly as shown, or indirectly through intermediary parts or tools, to the downhole reamer tool **10**. An inner diameter **36**D of the hollow helically lobed sleeve of rotor **36** may be sized to be commensurate with, for example equal to, an inner diameter **173**A of the casing **172**. In some cases nominal deviations between diameters **36**D and **173**A may be present. For

example the diameter **36**D may be larger than the diameter **173**A, or smaller, for example equal to the drift ID of the casing. A smaller diameter **36**D may be acceptable at the bottom of the well, if no further sections will be drilled, or if only a limited number of sections are to be drilled and the diameter **36**D still permits sufficient play for such sections and casing to pass through. If the diameter **36**D is too small, milling tools may be required to mill out the excess diameter, and such milling tools may require an extra trip in and out of the well to position and retrieve such tools.

Referring to FIG. **28**, once the casing string is landed in the desired position, the casing **172** may be cemented in place. To accomplish such cement may be pumped down the internal bore of the casing **172**, to the casing reamer tool **10**, out the outlet ports **72** in the tool **10**, and up the annulus defined between the well and the casing string **173**. The tool **10** may be structured as a guide or float shoe, and may have a one-way valve to prevent backflow of cement. Upon setting of the cement, casing reamer tool may be drilled out by running a drill bit **181** at the end of a drill string **185** to the tool **10**, and operating the drill bit **181** to drill out an axial passage in the tool **10**. Once drilled out, the drill bit **181** continues on downhole to create and extend the well bore by adding a new section of well bore.

Referring to FIGS. **21-23**, a modification of the embodiment of FIG. **18** is illustrated. Referring to FIGS. **22**A and **22**B, in the example shown, fluid is pumped into a portion **160**A of the interior passageway **160**, passing into the motor **15**, and causing the rotor **36** to rotate, turn the drive shaft **124**, and turn the reamer part **14** and nose **48**. Fluid then continues down the internal annulus of the tool **10** between the drive shaft **124** and a static sleeve **142**, passing through radial ports **143** in drive adapter **144** and entering a bore **160**B of bearing shaft **132**, exiting the nose **48** via fluid ports **72**. Once the casing is landed the casing may be cemented in place and the tool **10** may be drilled through and the wellbore continued in a downhole direction.

Referring to FIGS. **24**, **24**A, **24**B, **25**, **26**, and **27**, a further embodiment of a downhole reamer tool **10**, such as a casing reamer shoe as shown, is illustrated. In the example shown fluid enters through the uphole end **42** into the portion **160**A of interior passageway **160**. The fluid passes through radial ports **135** into the motor **15**. Upper and lower bearing assemblies **223** and **225** may be used. The reaming tool **10** may agitate a drill string or casing string by generating a shock-wave due to the rotation of the tool. This extends the reach of the casing **50** by creating agitation. In some extended reach wells (e.g. horizontal wells that are longer than the vertical section of the well) the tool **10** may run the casing **50** further than normally would be possible without extra hydraulic or mechanical evacuation. The torque produced may allow the tool **10** to drill with a casing bit. The tool **10** may replace a jetting assembly in deep water operations.

Referring to FIGS. **36** and **39**A-C, an electrochemical machining (ECM) method and resulting downhole tool **10** are illustrated. Referring to FIG. **36**, in a first stage the stator is formed by ECM. Electrochemical machining (ECM) is a method of removing metal by an electrochemical process. It may be used for working extremely hard materials or materials that are difficult to machine using conventional methods. ECM may be used to cut small or odd-shaped angles, intricate contours or cavities in hard and exotic metals, such as titanium aluminides, and high nickel, cobalt, and rhenium alloys. Both external and internal geometries can be machined.

ECM may be characterized as "reverse electroplating" in that it removes material instead of adding it. An ECM cutting tool is guided along the desired path close to the workpiece but without touching the workpiece. High metal removal rates are possible with ECM, with no thermal or mechanical stresses being transferred to the part, and mirror surface finishes can be achieved.

In the ECM process, a cathode (tool) is advanced into an anode (workpiece). A pressurized electrolyte is injected at a set temperature to the area being cut. The feed rate may be the same as the rate of liquefication of the material. The gap between the tool and the workpiece may vary, for example within 80-800 micrometers or 0.003-0.030 inches, or other suitable distances smaller or greater. As electrons cross the gap, material from the workpiece is dissolved and the tool forms the desired shape in the workpiece according to the shape of the cutting tool. The electrolytic fluid carries away the metal hydroxide formed in the process.

Referring to FIG. **36**, the stator **32** may be made via ECM. A power supply **214** may be connected to a metal block or tube **202**, which forms a workpiece, and a shaping tool such as cutting tool **204**, for example to pass current between the metal tube **202** and the shaping tool **204**. The power supply **214** may thus establish an electrical field across gap **221** defined by the outer sidewall **225** of the cutting tool **204** and an inner sidewall **227** of the workpiece or tube **202**. The metal tube **202** may form an anode. The shaping tool **204** may form a cathode.

The shaping tool **204** may have a tool head **208** positioned adjacent a surface **220** of the shaping tool **204**, for example defining a gap between the tool head **208** and the surface **220**, with surface **220** being eroded and retreating as the tool head **208** advances. An electrolyte **210** or other suitable conductive fluid may be injected and continually flowed through the gap **221** between the tool head **208** and the surface **220**. The electrolyte **210** may be supplied to the shaping tool **204** from a suitable reservoir **203** via one or more of a pump **240** and a fluid line **216**, for example that extends through the interior of the shaping tool **204**. The electrolyte **210** may exit the shaping tool **204** via a nozzle **218**, for example defined within the tool head **208** of the shaping tool **204**, and upon exit the electrolyte comes into contact with the tube **202**. Once the electrolyte passes the gap **221** and absorbs metal from the tube **202**, the now-metal-carrying electrolyte may flow into a further reservoir **211**, where the fluid may be recycled back into the supply reservoir **203**, for example via a recovery line **213**. The fluid may be filtered or treated prior to re-entering reservoir **203**. In some cases spent fluid is discarded. A cooling circuit may be provided to manage temperature changes in the electrolyte fluid during the process.

During the ECM process the shaping tool **204** may be rotated and advanced around and along, respectively, an axis **209** of the metal tube **202**, for example in a direction **222**, via a suitable actuator **212** such as a linear actuator or hydraulic arm. Extension of the shaping tool **204** towards the surface **220** may cause release or removal of material from the metal tube **202**.

Outer sidewall **225** of the cutting tool **204** may have a suitable shape such as a helically lobed profile as shown. Extension and rotation of the shaping tool **204** into the tube **202** advances the surface **220** and erodes material in the interior of the metal tube **202** to form helical lobes that are contoured into an inner surface **206** of the metal tube **202**. The cutting tool **204** may rotate about the axis **209** such that the inner sidewall **227** of the workpiece or tube **202** takes on a shape that is the inverse of the helically lobed profile of the

outer sidewall **225** of the cutting tool **204**. Movement, for example advancement, extension, retraction, and/or rotation, of the shaping tool **204** may follow a preset path or pattern determined by a controller **258**. The rotation and advancement of the tool **204** may follow the profile lines of the helical lobes of the tool **204**, to ensure that the tube **202** takes on the same helically lobed profile. The controller **258** and the actuator **212** may be connected to one or more of the power supply **214**, actuator **212**, and pump **240** via respective control lines **244**, **242**, and **245**. In some cases variations of ECM may be used, such as electrical discharge machining (EDM), or other processes that involve selective erosion of the interior surfaces of the workpiece to achieve the desired interior shape.

Referring to FIGS. **38** and **39**A-C, a drilling motor tool **10** is illustrated. The tool **10** may be formed by ECM or another suitable method. ECM may permit a suitable stator **32** to be formed from a single integral block of material such as tube **202** (FIG. **36**). A single integral block of material may be initially a suitable unbroken shape such as a cylinder, although the block could have a solid or hollow core, and could be other than cylindrically shaped, such as shaped like a rectangular box. Further machining after ECM may be carried out to finalize the shape of the stator **32**. ECM may permit extended lengths of integral stator sections to be made, for example stator sections may be made with an axial length **219** (FIG. **38**) of at least fifty and in some cases fifty, eighty, one hundred fifty, and three hundred inches or more, defined between axial ends **32**A and **32**B of the stator. The resulting stator may have no break lines or transition points such as weld lines or abutting ends of adjacent sections connected by connectors such as dowels. Instead, the stator may have a continuous unbroken profile from axial end to axial end. The axial ends **32**A and **32**B may refer in some cases to the start and end points of the helically lobed profile. By contrast conventional computer numerical control (CNC) methods using a lathe and mill may only be able to create a stator section of thirty six inches or less. The length of a tool **10** produced by ECM may be limited by the axial length of the cutting tool **202**, with such axial length capable of being tailored to achieve the desired stator length, and hence in theory any length of stator **32** may be created. In other cases the rotor, or both the rotor and the stator, may be formed using ECM. In cases where the rotor is formed by ECM, the inner sidewall of the cutting tool may be shaped with a helically lobed profile, so that the cutting tool rotates about the axis such that the sidewall of the workpiece takes on a shape that is the inverse of the helically lobed profile of the inner sidewall of the cutting tool.

In some cases the resulting stator formed may be connected with adjacent stators as sections to form a larger stator. In the example shown the entire motor **15** is formed by a single stator **32**, in which a corresponding rotor **36** is inserted to assemble the motor **15**. Rotor contacting surfaces of the stator, and stator contacting surfaces of the rotor, may be rigid, for example metal, for further example the same type of metal or different metals as one another. In other cases an elastomeric coating such as rubber may be placed, for example lined with corresponding helically lobed shape, on the inner sidewall **227** of the stator **32**. Referring to FIGS. **28** and **38**, once formed and assembled, the tool **10** may be used in a downhole operation by positioning the tool **10** in a well bore **176**, and pumping fluid to operate the progressive cavity section to rotate the rotor relative to the stator. In the example shown the tool **10** may be connected to or incorporate a drill bit **181**, such that the rotor **36** is connected to rotate the drill bit **181** under fluid pressure to drill the well.

Referring to FIGS. **39**A-C, the tool **10** assembled may incorporate various suitable features, such as uphole and downhole tubing connectors **39** and **37**, respectively, bearings **128**, reamers **24**, a drive shaft **94**, and top and bottom subs **16** and **38**, respectively.

Methods may be used other than ECM to form a stator **32** out of a single integral block of material. Referring to FIG. **37**, for example, three-dimensional printing may be used. Three-dimensional (3D) printing, also known as a form of additive manufacturing (AM), refers to processes used to create a three-dimensional object in which layers of material are formed under computer control to create an object. Objects may be of almost any shape or geometry and may be produced using digital model data from a 3D model or another electronic data source such as an Additive Manufacturing File (AMF) file. Stereolithography (STL) is one of the most common file types that 3D printers can read. Thus, unlike material removed from a stock in a conventional machining process, 3D printing or AM builds a three-dimensional object from computer-aided design (CAD) model or AMF file by successively adding material layer by layer.

In some cases the stator **32** may be formed as a single piece. For example the stator **32** may be formed as a single piece by three dimensional printing. Layers of metal may be added until the desired shape is achieved. The resulting stator may be used in a rubberless, rigid contact surface application as described elsewhere in this document. A hollow rotor sleeve may be inserted into the stator to form a progressive cavity power section. In other cases a single piece stator may be made by other suitable methods, such as electrochemical machining, or one piece CNC machining.

Referring to FIG. **37**, the stator **32** may be made via a 3D printer **224**. The 3D printer **224** may comprise a structural frame **232** upon which actuators and workpieces are mounted. Frame **232** may comprise a set of guide rails **230** mounted to the structural frame **232**, a printing head **234** mounted to the guide rails **230**, for example to slide in opposed directions along arrows **250** and in directions into and out of the page to provide freedom of movement in a plane **251**, which in the example shown is a horizontal plane. A nozzle **228** may be mounted to the printing head **234**. Printing material **226** may be supplied from a reservoir **252** to the printing head **234** and ejected onto a substrate such as platform **236** via the nozzle **228**, for example to form the stator **32**. The platform **236** may be raised and lowered via an actuator **248** such as in opposed directions **260**, for example to facilitate addition of the printing material **226** to the platform **236**. Actuators that do not require rails may be used, for example robotic arms may be used as actuators. The printing head **234**, the actuator **248**, and the container **252** may be connected to a controller **238** via respective control lines **254**, **262**, and **246**. Once completed and cured, a rotor may be inserted into the stator **32** to assemble the tool **10**.

Referring to FIGS. **2**A, **2**B, and **3**, stators **32** may be made by other suitable methods such as using dowels **34**. A progressive cavity section may be produced with a stator **32** and a rotor **36**, in which the stator is formed by plural axial stator sections, such as sections **32'-32'''** connected end to end. Adjacent axial stator sections, of the plural axial stator sections, may be connected by dowels **36** as before. Dowels may refer to pegs as shown in FIG. **3** that are separate and independent to sections **32'-32'''**, or dowels may refer to pegs that are integral with one of the stator sections and extend out into engagement with an adjacent section in use. Adhesive and other techniques may be used as described else-

where in this document. Dowels may be used to construct any suitable downhole tool incorporating a progressive cavity section.

The techniques, methods, and processes described here may be used to make and use various downhole tools, from drilling motors, to reamers, to rotary steerables, stimulation tools, pulsation tools, and others.

The stator **32**, rotor **36**, or both, may be subjected to various surface treatments to improve performance, for example to increase physical properties. Such treatments may include varying the coefficient of friction, surface hardness, metal porosity, and residual surface stresses. Processes may include heat treatments such as laser hardening, nitriding, carborizing, or boronzing, to modify surface hardness. Teflon, or ceramic coating, or polishing, may be used or carried out to reduce friction. Surface coating processes such as a chrome overlay, carbide overlay, physical vapor deposition, chemical vapor deposition, or high velocity oxygen fuel (HVOF) processes may be used.

The tool **10** may be used in a drilling application. In such cases the tool **10** may be ran with a drilling rig outfitted to drill with casing. The nose **48** of the tool **10** may be of similar construction as a typical drill bit, for example with cutting structures impregnated into a metal matrix. After drilling the well, and after the casing has been cemented in place, the tool **10** may be drilled out. In some cases the nose **48** may need to be milled out by a milling tool due to the hardness of material of the nose **48**. Milling may require an extra run to bring the milling tool down the well, to the nose **48** and back up the well again, to change out the milling bit into a drill bit. In some cases a casing while drilling application may be carried out while drilling a vertical well, although the embodiments here are not limited to vertical wells. To drill a directional or horizontal well the tool **10** may have an adjustable housing, and may use a directional measurement (MWD—measuring while drilling) system. In some cases a non-magnetic environment may be needed be needed with certain MWD technology. In other cases a gyro may be used with a drilling application.

The reamer tool **10** may be considered to be a mandrel assembly, with an inner mandrel and an outer mandrel. The tool **10** may be coupled to the bottom end of the casing in a variety of manners, including but not limited to mating threads, press fits, snap-fits, friction fitting, adhesives, bolts, and the like and combinations thereof. The tool **10** may grip a shoe, which is the operating component that interfaces with the interior of the hole to be reamed and abrades away material, thereby reaming the hole. The shoe may include protrusions that, when the shoe spins, impact with non-smooth regions of the interior of the hole and thereby abrade the same making such regions more smooth and increasing the effective interior diameter of the same so that the casing can follow behind without getting stuck. After the drilling is completed for a particular section of a hole, the operator may put casing down the hole to create a smooth interior bore through which additional work may be completed.

However, the hole is generally not perfect and often includes defects that can stop the casing from going all the way down. Accordingly, it is desirable to put a reaming tool, the operating tip of which is usually called a shoe, towards the bottom to ream out the hole as the casing slides down. In one non-limiting embodiment, there is a reaming system, device, and/or mandrel assembly that is, advantageously, a low cost system that attaches to or includes one of a great variety of shoes (e.g. float shoe, reamer shoe, guide shoe) from a variety of manufacturers. The tool **10** may include an internal/central axle that rotates inside a housing and/or includes a pin-down connection (e.g. pin to pin, box-pin) to couple to a shoe so it can connect to any tool/shoe. The internal axle spins when fluid is pumped through the mandrel assembly and spins a sub that is connected to the shoe which therefore also spins. The internal axle and/or other centrally positioned parts may be of an aluminum, bronze, brass, and/or zinc alloy (or other material that may be drilled through rather easily, since the mandrel assembly is generally left at a bottom of the hole when the casing is finished being installed).

Additionally, although the figures illustrate an outer mandrel with a certain number of spiral lobes on an interior thereof, a different number of lobes and/or lobes of different slopes, curvatures, sizes, shapes and the like may be present. Finally, it is envisioned that the components of the device may be constructed of a variety of materials, including but not limited to metals (both drillable and not), plastics, ceramics, composites and the like and combinations thereof. Parts may be made up of more than one part connected together, for example a housing may be made of plural sleeves of material threaded or press fitted together to form one unit. Blades include helical blades. A magnet tool may be used in an uphole direction of the casing brush or other embodiments of tool **10** to assist in collectively large metallic debris.

Parts or components of tool **10** may be connected to one another and other parts of a tubing string by any suitable method, including mating threads, press fits, snap-fits, friction fitting, adhesives, bolts, bearings, and the like and combinations thereof. Points of dynamic contact may be coated with one or more of an anti-corrosion agent and a slip agent. Tools **10** may be used in suitable applications, such as deep water or deep well applications, as well as conventional wells. In some cases stators or rotors may be made with forty inches of axial length or more.

In the claims, the word "comprising" is used in its inclusive sense and does not exclude other elements being present. The indefinite articles "a" and "an" before a claim feature do not exclude more than one of the feature being present. Each one of the individual features described here may be used in one or more embodiments and is not, by virtue only of being described here, to be construed as essential to all embodiments as defined by the claims.

The embodiments of the invention in which an exclusive property or privilege is claimed are defined as follows:

1. A downhole tool comprising:

a progressive cavity section with a stator and a rotor;

in which the stator is formed from a single integral block of material, and the stator has a length of at least fifty inches defined between axial ends of the stator;

in which rotor contacting surfaces of the stator, and stator contacting surfaces of the rotor, are rigid and do not flex when in use at downhole temperatures;

in which the stator contacting surfaces and the rotor contacting surfaces are made of metal;

in which the stator is formed by electrochemical machining (ECM) to structure the rotor contacting surfaces of the stator to achieve a sufficiently narrow clearance or negative interference fit with the rotor to form an efficient pumping seal without seizing the progressive cavity section in use; and

in which the rotor contacting surfaces of the stator have been heat treated for increased surface hardness.

2. The downhole tool of claim **1** in which the progressive cavity section is connected to rotate a reamer part of a casing reamer shoe.

3. The downhole tool of claim 1 in which the progressive cavity section is connected to rotate a drill bit.

4. The downhole tool of claim 1 in which the stator has a length of at least eighty inches defined between axial ends of the stator.

5. The downhole tool of claim 4 in which the stator has a length of at least one hundred and fifty inches defined between axial ends of the stator.

6. The downhole tool of claim 5 in which the stator has a length of at least three hundred inches defined between axial ends of the stator.

7. The downhole tool of claim 1 in which the rotor is formed by electrochemical machining (ECM).

8. A method comprising:

positioning the downhole tool of claim 1 in a well; and

pumping fluid to operate the progressive cavity section to rotate the rotor relative to the stator.

9. The downhole tool of claim 1 in which the stator contacting surfaces of the rotor have been heat treated for increased surface hardness.

10. The downhole tool of claim 1 in which the rotor contacting surfaces of the stator and the stator contacting surfaces of the rotor have been heat treated with nitriding for increased surface hardness.

11. A method comprising:

forming a stator from a single integral block of material, in which the stator has a length of at least fifty inches defined between axial ends of the stator;

assembling a downhole tool by inserting a rotor into the stator;

in which rotor contacting surfaces of the stator, and stator contacting surfaces of the rotor, are rigid and do not flex when in use at downhole temperatures;

in which the stator contacting surfaces and the rotor contacting surfaces are made of metal;

in which the stator is formed by electrochemical machining (ECM) to structure the rotor contacting surfaces of the stator to achieve a sufficiently narrow clearance or negative interference fit with the rotor to form an efficient pumping seal without seizing the progressive cavity section in use; and

in which forming comprises heat treating the rotor contacting surfaces of the stator to increase surface hardness.

12. The method of claim 11 in which the stator and the rotor within the downhole tool form a progressive cavity power section connected to rotate a reamer part of a casing reamer shoe.

13. The method of claim 11 in which the stator and the rotor within the downhole tool form a progressive cavity power section connected to rotate a drill bit.

14. The method of claim 11 in which the stator has a length of at least eighty inches defined between axial ends of the stator.

15. The method of claim 14 in which the stator has a length of at least one hundred and fifty inches defined between axial ends of the stator.

16. The method of claim 15 in which the stator has a length of at least three hundred inches defined between axial ends of the stator.

17. The method of claim 11 in which the rotor is formed by electrochemical machining (ECM).

18. The method of claim 11 in which the stator contacting surfaces of the rotor have been heat treated to increase surface hardness.

19. The method of claim 11 in which the rotor contacting surfaces of the stator and the stator contacting surfaces of the rotor have been heat treated with nitriding to increase surface hardness.

* * * * *