(19) China National Intellectual Property Administration

(12) Invention Patent Application

(10) Application Publication No. CN 102501016 A

(43) Date of Application Publication 2012. 06. 20

(21) Application No. 201110346733. 7

(22) Date of Application 2011. 11. 04

(71) Applicant China National Offshore Oil Corporation

Address 100010 No. 25 Chaoyangmen North Street, Dongcheng District, Beijing

Applicant CNOOC Energy Technology & Services Limited

(72) Inventors Liu Zhilong; Yang Wanyou; Yao Zhixiang

(74) Patent Agency Beiyang Patent Agency 12201

Agent Zhang Jinting

(51) Int. CI.

B23P 15/00(2006.01)

B23H 3/00(2006.01)

Claims: 1 page Instruction Book: 3 pages Attached Figures: 1 page

(54) Title of Invention

A method for processing the stator of a fully metallic screw pump

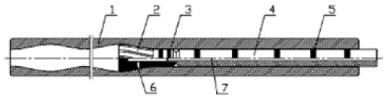

(57) Abstract

This invention discloses a processing method for the stator of a fully metallic screw pump, which includes the following steps: I) complete the processing of the stator blank, where the stator blank has a central hole formed for creating a stator cavity; II) use electrochemical machining to shape the stator cavity; III) perform polishing treatment on the stator cavity; IV) carry out surface hardening treatment on the stator cavity. This invention employs electrochemical machining combined with polishing and surface hardening treatments to address the difficulties in processing the stator of a fully metallic screw pump. This processing method offers significant advantages for machining difficult-to-process materials, complex shapes, or thin-walled parts. Moreover, this processing method features a broad range of applicable materials, high production efficiency, high forming precision, and the reusability of electrode components. This invention breaks through the technical blockade imposed by overseas nations, which have long relied on hydraulic forming techniques for producing fully metallic screw pump stators. It opens a new pathway for producing fully metallic screw pump stators, effectively reducing the difficulty and enhancing the efficiency of processing fully metallic screw pump stators.

CN 102501016 A

Full-Metal-Power B.V. EX. 1005

1. A method for processing the stator of a fully metallic screw pump is characterized by the following steps:

I) Completing the processing of the stator blank, where the stator blank has a central hole formed for creating a stator cavity;

II) Using electrochemical machining to shape the stator cavity;

1) Fixing the stator blank on the electrochemical machining equipment and installing the electrode assembly into the central hole of the blank; the electrode assembly consists of a machining electrode coaxially fixed to an electrode stem;

The machining electrode has a shaping section and a sealing section; the sealing section of the machining electrode is equipped with a seal; before starting the electrochemical machining, the machining electrode is installed at one end of the stator blank; the sealing section of the machining electrode is installed inside the central hole of the stator blank, while the shaping section of the machining electrode is outside the stator blank; the shaping section of the machining electrode has a discharge hole;

An insulating and aligning sleeve projects outward from the electrode stem; before starting the electrochemical machining, one end of the electrode stem protrudes from the other end of the stator blank and is connected to the rotating and withdrawing component of the electrochemical machining equipment; the electrode stem has an internal flow passage connected to the discharge hole;

2) The positive terminal of the DC power supply is connected to the stator blank, and the negative terminal is connected to the electrode assembly. Simultaneously, the electrolyte is injected into the flow passage, and the rotating and withdrawing component of the electrochemical machining equipment is activated; the rotating and withdrawing component pulls out the electrode assembly, forming the stator cavity inside the central hole of the stator blank.

III) Performing polishing treatment on the stator cavity;

IV) Carrying out surface hardening treatment on the stator cavity.

2. The method for processing the stator of a fully metallic screw pump according to claim 1 is characterized by: the polishing treatment method in step III) which is any one of electrochemical polishing, magnetic polishing, and mechanical polishing.

3. The method for processing the stator of a fully metallic screw pump according to claim 1 is characterized by: the surface hardening treatment method in step IV) which is any one of nickel plating hardening, nitriding hardening, carburizing hardening, and quenching hardening.

A Method for Processing the Stator of A Fully Metallic Screw Pump

Technical Field

[0001] This invention relates to a processing method for screw pump stators, particularly to a method for processing the stator of a fully metallic screw pump.

Background Information about the Technical Field

[0002] At present, in oilfield production, there are two types of oil extraction screw pumps: rubber stator screw pumps and metal stator screw pumps. Rubber stator screw pumps use rubber stators, which are easy to process and form, but are not suitable for high-temperature wells and are prone to damage. Fully metallic screw pumps can withstand higher downhole temperatures and are suitable for high-temperature wells. However, the cavity of the stator in fully metallic screw pumps is complex, making conventional processing challenging.

[0003] Currently, although hydraulic forming technology abroad can produce high-quality fully metallic screw pump stators, the long-term technological blockade has prevented the application of such technology in China. While China has achieved maturity and expertise in electrolytic machining for forming multi-head (over five heads) screw drill tools approximately three meters in length with uniform wall thickness, there has been no attempt to process longer, larger cutting volume, and fewer-head (two-head) metal stators.

Content of the Invention

[0004] This invention offers a processing method for fully metallic screw pump stators, characterized by high production efficiency, high forming accuracy, and low processing costs, effectively addressing the technical challenges present in existing technologies.

[0005] The technical solution presented by this invention to address the technical challenges present in existing technologies is: a method for processing the stator of a fully metallic screw pump, comprising the following steps: I) completing the processing of the stator blank, where the stator blank has a central hole formed for creating stator cavity; II) using electrochemical machining to shape the stator cavity; 1) fixing the stator blank on the electrochemical machining equipment and installing the electrode assembly into the central hole of the blank; the electrode assembly consists of a machining electrode coaxially fixed to an electrode stem; the machining electrode has a shaping section and a sealing section; the sealing section of the machining electrode is equipped with a seal; before starting the electrochemical machining, the machining electrode is installed at one end of the stator blank; the sealing section of the machining electrode is installed inside the central hole of the stator blank, while the shaping section of the machining electrode is outside the stator blank; the shaping section of the machining electrode has a discharge hole; an insulating and aligning sleeve projects outward from the electrode stem; before starting the electrochemical machining, one end of the electrode stem protrudes from the other end of the stator blank and is connected to the rotating and withdrawing component of the electrochemical machining equipment; the electrode stem has an internal flow passage connected to the discharge hole; 2) the positive terminal of the DC power supply is connected to the stator blank, and the negative terminal is connected to the electrode assembly; simultaneously, electrolyte is injected into the flow passage, and the rotating and withdrawing component of the electrochemical machining equipment is activated; the rotating and withdrawing component pulls out the electrode assembly, forming the stator cavity inside the central hole of the stator blank; III) performing polishing treatment on the stator cavity; IV) carrying out surface hardening treatment on the stator cavity.

[0006] The polishing treatment method in step III) is any one of electrochemical polishing, magnetic polishing, or mechanical polishing.

[0007] The surface hardening treatment method in step IV) is any one of nickel plating hardening, nitriding hardening, carburizing hardening, and quenching hardening.

[0008] The advantages and positive effects of this invention stem from its use of electrochemical machining combined with polishing and surface hardening treatments to address the difficulties in processing the stator of a fully metallic screw pump. This processing method offers significant advantages for machining difficult-to-process materials, complex shapes, or thin-walled parts. Moreover, this processing method features a broad range of applicable materials, high production efficiency, high forming precision, and the reusability of electrode components. This invention breaks through the technical blockade imposed by overseas nations, which have long relied on hydraulic forming techniques for producing fully metallic screw pump stators. It opens a new pathway

for producing fully metallic screw pump stators, effectively reducing the difficulty and enhancing the efficiency of processing fully metallic screw pump stators.

Description of Attached Figures

[0009] Figure 1 is a schematic diagram of substep 1) in step II) of this invention;

[0010] Figure 2 is a schematic diagram of substep 2) in step II) of this invention;

[0011] Figure 3 is a schematic diagram of the fully metallic screw pump stator formed by this invention.

[0012] In the figures: 1. Stator blank, 2. Machining electrode, 3. Seal, 4. Electrode stem, 5. Insulating and aligning sleeve, 6. Discharge hole, 7. Flow passage.

Specific Embodiment

[0013] To gain a deeper understanding of this invention's content, characteristics, and benefits, the following embodiment is provided and explained in detail with reference to the attached figures:

[0014] A method for processing the stator of a fully metallic screw pump, including the following steps:

[0015] I) Completing the processing of the stator blank 1, where the stator blank 1 has a central hole formed for creating a stator cavity.

[0016] II) Using electrochemical machining to shape the stator cavity;

[0017] The specific steps are as follows:

[0018] 1) Fixing the stator blank 1 on the electrochemical machining equipment and installing the electrode assembly into the central hole of the stator blank 1, as shown in Figure 1; the electrode assembly consists of a machining electrode 2 coaxially fixed to an electrode stem 4;

[0019] The machining electrode 2 has a shaping section and a sealing section; the sealing section of the machining electrode is equipped with a seal 3; before starting the electrochemical machining, the machining electrode 2 is installed at one end of the stator blank 1; the sealing section of the machining electrode 2 is installed inside the central hole of the stator blank 1, while the shaping section of the machining electrode 2 is outside the stator blank 1; the shaping section of the machining electrode 2 has a discharge hole 6;

[0020] An insulating and aligning sleeve 5 projects outward from the electrode stem 4; the outwardly protruding insulating and aligning sleeve 5 ensures that there is a gap between the machining electrode 2 and electrode stem 4 and the central hole of the stator blank 1, preventing contact; before starting the electrochemical machining, one end of the electrode stem 4 protrudes from the other end of the stator blank 1 and is connected to the rotating and withdrawing component of the electrochemical machining equipment; the electrode stem 4 has an internal flow passage 7 connected to the discharge hole 6;

[0021] 2) The positive terminal of the DC power supply is connected to the stator blank 1, and the negative terminal is connected to the electrode assembly. Simultaneously, electrolyte is injected into the flow passage 7, and the rotating and withdrawing component of the electrochemical machining equipment is activated, as shown in Figure 2; electrolyte flows into the electrode stem 4 and out from the shaping section of machining electrode 2, then out through the end face of the shaping cavity of stator blank 1, forming an electrical circuit between the two electrodes, thereby achieving electrochemical anodic dissolving. As the electrode assembly performs rotational and linear motion relative to the stator blank 1, the metal on the central hole of the stator blank 1 is continuously electrolyzed, and the electrolysis products are continuously washed away by the electrolyte. Eventually, the gaps between the two electrodes become consistent across all areas; with the rotating and withdrawing component of the electrochemical machining equipment pulling out the electrode assembly, the surface of the central hole of the stator blank 1 forms a shape similar to the working surface of the shaping section of the machining electrode, thus forming the stator cavity, as shown in Figure 3.

[0022] III) Polishing of the stator cavity can be done using any of the following methods: electrochemical polishing, magnetic polishing, and mechanical polishing.

[0023] IV) Surface hardening treatment on the stator cavity can be done using any of the following methods: nickel plating hardening, nitriding hardening, carburizing hardening, and quenching hardening.

[0024] Although the preferred embodiment of this invention has been described above with reference to the attached figures, this invention is not limited to the specific embodiment described. The specific embodiment

above is illustrative and not restrictive. Those of ordinary skill in the art, inspired by this invention, can make many variations without departing from the purpose and scope of protection of this invention and the claims. All such variations fall within the scope of protection of this invention.

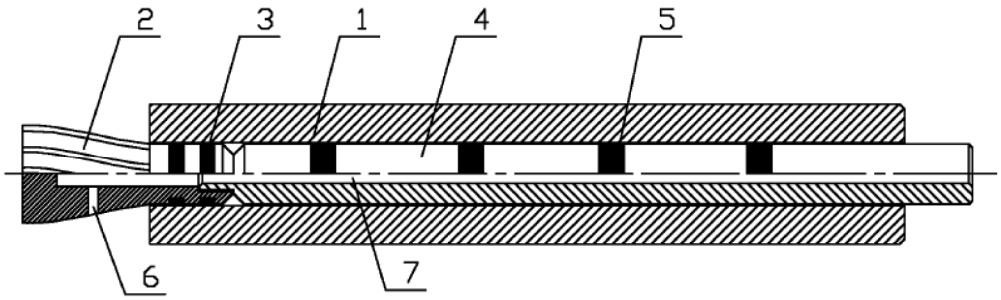

Figure 1

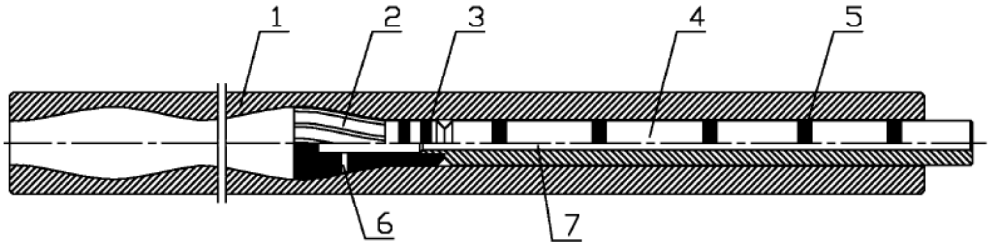

Figure 2

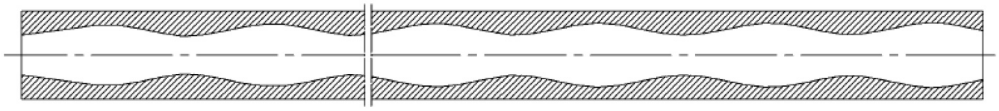

Figure 3