INTERNATIONAL TELECOMMUNICATION UNION

ITU-T

TELECOMMUNICATION
STANDARDIZATION SECTOR
OF ITU

G.992.1

(06/99)

SERIES G: TRANSMISSION SYSTEMS AND MEDIA, DIGITAL SYSTEMS AND NETWORKS

Digital transmission systems – Digital sections and digital line system – Access networks

---

Asymmetric digital subscriber line (ADSL) transceivers

ITU-T Recommendation G.992.1

(Previously CCITT Recommendation)

IPR2025-00395
Petitioners' Exhibit 1011
Page 1 of 256

ITU-T G-SERIES RECOMMENDATIONS

TRANSMISSION SYSTEMS AND MEDIA, DIGITAL SYSTEMS AND NETWORKS

INTERNATIONAL TELEPHONE CONNECTIONS AND CIRCUITS	G.100–G.199
INTERNATIONAL ANALOGUE CARRIER SYSTEM	
GENERAL CHARACTERISTICS COMMON TO ALL ANALOGUE CARRIER-TRANSMISSION SYSTEMS	G.200–G.299
INDIVIDUAL CHARACTERISTICS OF INTERNATIONAL CARRIER TELEPHONE SYSTEMS ON METALLIC LINES	G.300–G.399
GENERAL CHARACTERISTICS OF INTERNATIONAL CARRIER TELEPHONE SYSTEMS ON RADIO-RELAY OR SATELLITE LINKS AND INTERCONNECTION WITH METALLIC LINES	G.400–G.449
COORDINATION OF RADIOTELEPHONY AND LINE TELEPHONY	G.450–G.499
TESTING EQUIPMENTS	
TRANSMISSION MEDIA CHARACTERISTICS	G.600–G.699
DIGITAL TRANSMISSION SYSTEMS	
TERMINAL EQUIPMENTS	G.700–G.799
DIGITAL NETWORKS	G.800–G.899
DIGITAL SECTIONS AND DIGITAL LINE SYSTEM	G.900–G.999
General	G.900–G.909
Parameters for optical fibre cable systems	G.910–G.919
Digital sections at hierarchical bit rates based on a bit rate of 2048 kbit/s	G.920–G.929
Digital line transmission systems on cable at non-hierarchical bit rates	G.930–G.939
Digital line systems provided by FDM transmission bearers	G.940–G.949
Digital line systems	G.950–G.959
Digital section and digital transmission systems for customer access to ISDN	G.960–G.969
Optical fibre submarine cable systems	G.970–G.979
Optical line systems for local and access networks	G.980–G.989
Access networks	**G.990–G.999**

For further details, please refer to ITU-T List of Recommendations.

ITU-T RECOMMENDATION G.992.1

ASYMMETRIC DIGITAL SUBSCRIBER LINE (ADSL) TRANSCEIVERS

Summary

This Recommendation describes Asymmetric Digital Subscriber Line (ADSL) Transceivers on a metallic twisted pair that allows high-speed data transmission between the network operator end (ATU-C) and the customer end (ATU-R). This Recommendation provides a variety of bearer channels in conjunction with one of three other services dependent on the environment:

1) ADSL transmission simultaneously on the same pair with voice (band) service;
2) ADSL transmission simultaneously on the same pair with G.961 (Appendix I or II) ISDN services; or
3) ADSL transmission on the same pair with voiceband transmission and with TCM-ISDN (G.961 Appendix III) in an adjacent pair.

Systems allow approximately 6 Mbit/s downstream and approximately 640 kbit/s upstream data rates depending on the deployment and noise environment.

This Recommendation specifies the physical layer characteristics of the Asymmetric Digital Subscriber Line (ADSL) interface to metallic loops.

This Recommendation has been written to help ensure the proper interfacing and interworking of ADSL transmission units at the customer end (ATU-R) and at the network operator end (ATU-C) and also to define the transport capability of the units. Proper operation shall be ensured when these two units are manufactured and provided independently. A single twisted pair of telephone wires is used to connect the ATU-C to the ATU-R. The ADSL transmission units must deal with a variety of wire pair characteristics and typical impairments (e.g. crosstalk and noise).

An ADSL transmission unit can simultaneously convey all of the following: downstream simplex bearers, duplex bearers, a baseband analogue duplex channel, and ADSL line overhead for framing, error control, operations and maintenance. Systems support a minimum of 6.144 Mbit/s downstream and 640 kbit/s upstream.

This Recommendation includes mandatory requirements, recommendations and options; these are designated by the words "shall", "should" and "may" respectively. The word "will" is used only to designate events that take place under some defined set of circumstances.

Two categories of performance are specified. Category I performance is required for compliance with this Recommendation; performance enhancement options are not required for category I equipment. Category II is a higher level of performance (i.e. longer lines and greater impairments). Category II performance and characteristics are not required for compliance with this Recommendation.

This Recommendation defines several optional capabilities and features:

- echo cancellation;
- trellis coded modulation;
- dual latency;
- transport of a network timing reference;
- transport of STM and/or ATM;
- reduced overhead framing modes.

It is the intention of this Recommendation to provide, by negotiation during initialization, for U-interface compatibility and interoperability between transceivers complying to this Recommendation and between transceivers that include different combinations of options.

Source

ITU-T Recommendation G.992.1 was prepared by ITU-T Study Group 15 (1997-2000) and was approved under the WTSC Resolution No. 1 procedure on 22 June 1999.

IPR2025-00395
Petitioners' Exhibit 1011
Page 3 of 256

FOREWORD

ITU (International Telecommunication Union) is the United Nations Specialized Agency in the field of telecommunications. The ITU Telecommunication Standardization Sector (ITU-T) is a permanent organ of the ITU. The ITU-T is responsible for studying technical, operating and tariff questions and issuing Recommendations on them with a view to standardizing telecommunications on a worldwide basis.

The World Telecommunication Standardization Conference (WTSC), which meets every four years, establishes the topics for study by the ITU-T Study Groups which, in their turn, produce Recommendations on these topics.

The approval of Recommendations by the Members of the ITU-T is covered by the procedure laid down in WTSC Resolution No. 1.

In some areas of information technology which fall within ITU-T's purview, the necessary standards are prepared on a collaborative basis with ISO and IEC.

NOTE

In this Recommendation, the expression "Administration" is used for conciseness to indicate both a telecommunication administration and a recognized operating agency.

INTELLECTUAL PROPERTY RIGHTS

The ITU draws attention to the possibility that the practice or implementation of this Recommendation may involve the use of a claimed Intellectual Property Right. The ITU takes no position concerning the evidence, validity or applicability of claimed Intellectual Property Rights, whether asserted by ITU members or others outside of the Recommendation development process.

As of the date of approval of this Recommendation, the ITU had received notice of intellectual property, protected by patents, which may be required to implement this Recommendation. However, implementors are cautioned that this may not represent the latest information and are therefore strongly urged to consult the TSB patent database.

© ITU 2000

All rights reserved. No part of this publication may be reproduced or utilized in any form or by any means, electronic or mechanical, including photocopying and microfilm, without permission in writing from the ITU.

IPR2025-00395
Petitioners' Exhibit 1011
Page 4 of 256

CONTENTS

		Page
1	Scope	1
1.1	System reference model	2
1.2	Objectives	2
2	References	3
3	Definitions	3
4	Abbreviations	6
5	Reference Models	9
5.1	ATU-C transmitter reference models	9
	5.1.1 ATU-C transmitter reference model for STM transport	10
	5.1.2 ATU-C transmitter reference model for ATM transport	11
5.2	ATU-R transmitter reference models	12
	5.2.1 ATU-R transmitter reference model for STM transport	12
	5.2.2 ATU-R transmitter reference model for ATM transport	13
5.3	ATU-C/R transmitter timing model (Annex C only)	13
6	Transport capacity	14
6.1	Transport of STM data	15
6.2	Transport of ATM data	16
6.3	ADSL system overheads and total bit rates	17
7	ATU-C functional characteristics	18
7.1	STM Transmission Protocol Specific functionalities	19
	7.1.1 ATU-C input and output V interfaces for STM transport	19
	7.1.2 Downstream simplex channels – bit rates	19
	7.1.3 Downstream/upstream duplex channels – bit rates	19
	7.1.4 Payload transfer delay	20
	7.1.5 Framing Structure for STM transport	20
7.2	ATM Transport Protocol Specific functionalities	20
	7.2.1 ATU-C input and output V interface for ATM transport	20
	7.2.2 Payload transfer delay	21
	7.2.3 ATM Cell specific functionalities	21
	7.2.4 Framing Structure for ATM transport	23
7.3	Network timing reference (NTR)	24
	7.3.1 Need for NTR	24
	7.3.2 Transport of the NTR	24
7.4	Framing	25
	7.4.1 Data symbols	25

IPR2025-00395
Petitioners' Exhibit 1011
Page 5 of 256

Page

7.4.2 Synchronization 33
7.4.3 Reduced overhead framing 35
7.5 Scramblers 37
7.6 Forward error correction 38
7.6.1 Reed-Solomon coding 38
7.6.2 Reed-Solomon Forward Error Correction Superframe Synchronization 38
7.6.3 Interleaving 38
7.6.4 Support of higher downstream bit rates with $S = 1/2$ (optional) 39
7.7 Tone ordering 40
7.8 Constellation encoder (trellis code version) 42
7.8.1 Bit extraction 42
7.8.2 Bit conversion 43
7.8.3 Coset partition and trellis diagram 43
7.8.4 Constellation encoder 47
7.9 Constellation encoder – No trellis coding 50
7.9.1 Bit extraction 50
7.9.2 Constellation encoder 50
7.10 Gain scaling 50
7.11 Modulation 51
7.11.1 Subcarriers 51
7.11.2 Modulation by the inverse discrete Fourier transform (IDFT) 51
7.11.3 Synchronization symbol 52
7.11.4 Inverse synchronization symbol (Annex C only) 52
7.12 Cyclic prefix 53
7.13 Transmitter dynamic range 53
7.13.1 Maximum clipping rate 53
7.13.2 Noise/distortion floor 53
7.14 ATU-C Downstream Transmitter spectral masks 54
7.15 Dual Bitmapping and Rate Conversion (Annex C only) 54
7.16 FEXT Bitmapping (Annex C only) 54
8 ATU-R Functional Characteristics 54
8.1 STM Transmission Protocol Specific functionalities 54
8.1.1 ATU-R input and output T interfaces for STM transport 54
8.1.2 Downstream simplex channels – Transceiver bit rates 55
8.1.3 Duplex channels – Transceiver bit rates 55
8.1.4 Framing Structure for STM transport 55
8.2 ATM Transport Protocol Specific functionalities 56
8.2.1 ATU-R input and output T interfaces for ATM transport 56

IPR2025-00395
Petitioners' Exhibit 1011
Page 6 of 256

Page

8.2.2 ATM Cell specific functionalities 56
8.2.3 Framing Structure for ATM transport 56
8.3 Network timing reference 57
8.4 Framing 57
8.4.1 Data symbols 57
8.4.2 Synchronization 61
8.4.3 Reduced overhead framing 63
8.5 Scramblers 63
8.6 Forward error correction 63
8.7 Tone ordering 63
8.8 Constellation encoder – Trellis version 64
8.9 Constellation encoder – Uncoded version 64
8.10 Gain scaling 64
8.11 Modulation 64
8.11.1 Subcarriers 64
8.11.2 Modulation by the inverse discrete Fourier transform 65
8.11.3 Synchronization symbol 65
8.11.4 Inverse synchronization symbol (Annex C only) 65
8.12 Cyclic prefix 65
8.13 Transmitter dynamic range 65
8.13.1 Maximum clipping rate 65
8.13.2 Noise/distortion floor 65
8.14 ATU-R Upstream Transmitter spectral response 66
8.15 Dual Bitmapping and Rate Conversion (Annex C only) 66
8.16 FEXT Bitmapping (Annex C only) 66
9 EOC Operations and Maintenance 66
9.1 Clear EOC 66
9.2 Embedded operations channel (EOC) requirements 67
9.2.1 EOC organization and protocol 67
9.2.2 EOC message structure 67
9.2.3 EOC message sets 68
9.2.4 Data registers in the ATU-R 72
9.2.5 EOC protocol states 73
9.3 In-service performance monitoring and surveillance 80
9.3.1 ADSL line related primitives 81
9.3.2 STM data path related primitives 83
9.3.3 ATM data path related primitives 83
9.3.4 Other ADSL indicators, parameters and signals 85

IPR2025-00395
Petitioners' Exhibit 1011
Page 7 of 256

Page

9.4 Failures and Performance Parameters 85
9.5 Test Parameters 85
9.5.1 Near-end test parameters 85
9.5.2 Far-end test parameters 86
10 Initialization 86
10.1 Overview 86
10.1.1 Basic functions of initialization 86
10.1.2 Transparency to methods of separating upstream and downstream signals 87
10.1.3 Implementation of service options for ADSL 87
10.1.4 Resetting during initialization and data transmission 87
10.1.5 Initialization with Hyperframe (Annex C only) 88
10.2 Handshake – ATU-C 88
10.2.1 CL messages 88
10.2.2 MS messages 88
10.3 Handshake – ATU-R 89
10.3.1 CLR messages 89
10.3.2 MS messages 90
10.4 Transceiver training – ATU-C 91
10.4.1 C-QUIET2 91
10.4.2 C-PILOT1 91
10.4.3 C-PILOT1A 92
10.4.4. C-QUIET3A 92
10.4.5 C-REVERB1 92
10.4.6 C-PILOT2 93
10.4.7 C-ECT 93
10.4.8 C-REVERB2 93
10.4.9 C-QUIET5 93
10.4.10 C-PILOT3 93
10.4.11 C-REVERB3 93
10.5 Transceiver training – ATU-R 93
10.5.1 R-QUIET2 93
10.5.2 R-REVERB1 94
10.5.3 R-QUIET3 94
10.5.4 R-ECT 94
10.5.5 R-REVERB2 95
10.6 Channel analysis (ATU-C) 95
10.6.1 C-SEGUE1 95
10.6.2 C-RATES1 95
10.6.3 C-CRC1 96

IPR2025-00395
Petitioners' Exhibit 1011
Page 8 of 256

Page

10.6.4 C-MSG1 97
10.6.5 C-CRC2 98
10.6.6 C-MEDLEY 98
10.7 Channel analysis (ATU-R) 99
10.7.1 R-SEGUE1 99
10.7.2 R-REVERB3 99
10.7.3 R-SEGUE2 99
10.7.4 R-RATES1 99
10.7.5 R-CRC1 100
10.7.6 R-MSG1 100
10.7.7 R-CRC2 101
10.7.8 R-MEDLEY 101
10.7.9 R-REVERB4 102
10.8 Exchange – ATU-C 103
10.8.1 C-REVERB4 104
10.8.2 C-SEGUE2 104
10.8.3 C-RATES-RA 104
10.8.4 C-CRC-RA1 105
10.8.5 C-MSG-RA 106
10.8.6 C-CRC-RA2 106
10.8.7 C-REVERB-RA 106
10.8.8 C-SEGUE-RA 106
10.8.9 C-MSG2 106
10.8.10 C-CRC3 108
10.8.11 C-RATES2 108
10.8.12 C-CRC4 109
10.8.13 C-B&G 109
10.8.14 C-CRC5 109
10.8.15 C-REVERB5 109
10.8.16 C-SEGUE3 110
10.9 Exchange – ATU-R 110
10.9.1 R-SEGUE3 110
10.9.2 R-MSG-RA 110
10.9.3 R-CRC-RA1 111
10.9.4 R-RATES-RA 112
10.9.5 R-CRC-RA2 112
10.9.6 R-REVERB-RA 112
10.9.7 R-SEGUE-RA 112
10.9.8 R-MSG2 113
10.9.9 R-CRC3 114

IPR2025-00395
Petitioners' Exhibit 1011
Page 9 of 256

Page

10.9.10 R-RATES2 114
10.9.11 R-CRC4 114
10.9.12 R-REVERB5 115
10.9.13 R-SEGUE4 115
10.9.14 R-B&G 115
10.9.15 R-CRC5 116
10.9.16 R-REVERB6 116
10.9.17 R-SEGUE5 116
10.9.18 Details of Initialization timing 116

11 AOC on-line adaptation and reconfiguration 119

11.1 The ADSL overhead control (AOC) channel 119
11.1.1 AOC message header 119
11.1.2 AOC protocol 119

11.2 On-line adaptation – Bit swapping 120
11.2.1 Bit swap channel 120
11.2.2 Superframe counting 120
11.2.3 Bit swap request 120
11.2.4 Extended bit swap request 121
11.2.5 Bit swap acknowledge 122
11.2.6 Bit swap – Receiver 122
11.2.7 Bit swap – Transmitter 123

Annex A – Specific requirements for an ADSL system operating in the frequency band above POTS 123

A.1 ATU-C Functional Characteristics (pertains to clause 7) 123
A.1.1 Pilot Frequency (supplements 7.11.1.2) 123
A.1.2 ATU-C downstream transmit spectral mask (replaces 7.14) 123
A.1.3 ATU-C transmitter PSD mask for reduced NEXT 127

A.2 ATU-R (see clause 8) 128
A.2.1 Modulation by the inverse discrete Fourier transform (see 8.11.2) 128
A.2.2 Synchronization symbol (supplements 8.11.3) 129
A.2.3 Cyclic prefix (replaces 8.12) 129
A.2.4 ATU-R transmitter spectral mask (replaces 8.14) 129
A.2.5 Nyquist frequency (supplements 8.11.1.2) 132

A.3 Initialization (see clause 10) 133
A.3.1 Power cut-back (supplements 10.4.5.1) 133
A.3.2 Estimated average upstream loop attenuation (see 10.8.9.1) 133
A.3.3 Estimated average downstream loop attenuation (supplements 10.9.8.1) 133
A.3.4 C-PILOT1 (supplements 10.4.2) 133
A.3.5 R-REVERB1 (see 10.5.2) 133

IPR2025-00395
Petitioners' Exhibit 1011
Page 10 of 256

Page

A.3.6 C-ECT (see 10.4.7) 133
A.3.7 R-ECT (see 10.5.4) 133
A.3.8 C-MSG2 (supplements 10.8.9) 134
A.3.9 R-MSG2 (supplements 10.9.8) 134
A.4 Electrical characteristics (new) 134
A.4.1 DC characteristics 134
A.4.2 Voiceband characteristics 134
A.4.3 ADSL band characteristics 135

Annex B – Specific requirements for an ADSL system operating in the frequency band above ISDN as defined in ITU-T Recommendation G.961 Appendices I and II 136
B.1 ATU Functional Characteristics (see clause 7) 136
B.1.1 Data Subcarriers (see 7.11.1.1) 136
B.1.2 Pilot Frequency (see 7.11.1.2) 136
B.1.3 Downstream transmit spectral mask (replaces 7.14) 136
B.2 ATU-R functional characteristics (see clause 8) 140
B.2.1 ATU-R transmit reference models 140
B.2.2 ATU-R Upstream transmit spectral mask (replaces 8.14) 141
B.2.3 Data subcarriers (replaces 8.11.1.1) 143
B.2.4 Pilot frequency 144
B.2.5 Nyquist frequency (supplements 8.11.1.2) 144
B.2.6 Modulation by the Inverse Discrete Fourier Transform (replaces 8.11.2) 144
B.2.7 Synchronization symbol (supplements 8.11.3) 144
B.2.8 Cyclic prefix (replaces 8.12) 144
B.3 Initialization (see clause 10) 145
B.3.1 Handshake – ATU-C (supplements 10.2) 145
B.3.2 Handshake – ATU-R (supplements 10.3) 145
B.3.3 Power Cut-back (supplements 10.4.5.1) 146
B.3.4 Estimated average upstream loop attenuation (see 10.8.9.1) 146
B.3.5 Estimated average downstream loop attenuation (10.9.8.1) 146
B.3.6 C-PILOT1 (for 10.4.3) 146
B.3.7 R-REVERB1 (supplements 10.5.2) 146
B.3.8 R-MEDLEY (replaces 10.7.8) 147
B.3.9 C-MSG2 (supplements 10.8.9) 147
B.3.10 R-MSG2 (supplements 10.9.8) 147
B.3.11 C-ECT and R-ECT (supplements 10.4.7 and 10.5.4) 147
B.3.12 C-B&G (replaces 10.8.13) 147

Annex C – Specific requirements for an ADSL system operating in the same cable as ISDN as defined in ITU-T Recommendation G.961 Appendix III 150
C.1 Scope 150

IPR2025-00395
Petitioners' Exhibit 1011
Page 11 of 256

Page

C.2 Definitions 150
C.3 Reference Models 151
C.3.1 ATU-C transmitter reference model (replaces figures in 5.1) 151
C.3.2 ATU-R transmitter reference model (replaces figures in 5.2) 153
C.3.3 ATU-C/R transmitter timing model (replacement for 5.3) 155
C.4 ATU-C functional characteristics (pertains to clause 7) 158
C.4.1 STM transmission protocols specific functionality (pertains to 7.1) 158
C.4.2 ATM transmission protocols specific functionalities (pertains to 7.2) 159
C.4.3 Framing (pertains to 7.4) 159
C.4.4 Dual Bitmapping and Rate Conversion (replaces 7.15) 164
C.4.5 FEXT Bitmapping (replaces 7.16) 166
C.4.6 Tone Ordering (replacement for 7.7) 167
C.4.7 Modulation (pertains to 7.11) 167
C.4.8 ATU-C Downstream transmit spectral mask (replaces 7.14) 167
C.5 ATU-R Functional Characteristics (pertains to clause 8) 168
C.5.1 Framing (pertains to 8.4) 168
C.5.2 Dual Bitmapping and rate conversion (replaces 8.15) 171
C.5.3 FEXT Bitmapping (replaces 8.16) 173
C.5.4 Tone Ordering (pertains to 8.7) 173
C.5.5 Modulation (pertains to 8.11) 173
C.5.6 ATU-R Upstream Transmit Spectral Mask (supplements 8.14) 174
C.6 EOC Operation and Maintenance (pertains to clause 9) 174
C.6.1 ADSL line related primitives (supplements 9.3.1) 174
C.6.2 Test Parameters (supplements 9.5) 174
C.7 Initialization 174
C.7.1 Initialization with Hyperframe (replaces 10.1.5) 174
C.7.2 Handshake – ATU-C (supplements 10.2) 178
C.7.3 Handshake – ATU-R (supplements 10.3) 178
C.7.4 Transceiver Training – ATU-C (supplements 10.4) 179
C.7.5 Transceiver Training – ATU-R (supplements 10.5) 180
C.7.6 Channel analysis (ATU-C) (supplements 10.6) 181
C.7.7 Channel analysis (ATU-R) (supplements 10.7) 183
C.7.8 R-SEGUE1 (supplements 10.7.1) 184
C.7.9 Exchange – ATU-C (supplements 10.8) 185
C.7.10 Exchange – ATU-R (supplements 10.9) 186
C.8 AOC On-line adaptation and reconfiguration (pertains to clause 11) 191

Annex D – ATU-C and ATU-R state diagrams 192
D.1 Introduction 192
D.2 Definitions 192

IPR2025-00395
Petitioners' Exhibit 1011
Page 12 of 256

Page

D.3 State Diagrams 193

Annex E – POTS and ISDN-BA splitters 198

E.1 Type 1 – European 198

E.1.1 Impedance matching 198

E.1.2 Return loss 198

E.1.3 Insertion loss 199

E.1.4 Insertion loss distortion 199

E.1.5 Isolation 199

E.1.6 Signal power 199

E.1.7 Ringing 199

E.1.8 Unbalance about Earth (ETS-300.001, § 4.2.1 and § 4.2.2) 199

E.1.9 Frequencies and levels for pulse metering (ETS-300.001, § 1.7.8) 200

E.2 Type 2 – North America 200

E.2.1 Introduction 200

E.2.2 DC characteristics 203

E.2.3 Voiceband characteristics 203

E.2.4 ADSL band testing 209

E.2.5 Home premises physical considerations 211

E.3 Type 3 – ADSL above ISDN (ITU-T G.961 Appendix I or II) 211

E.4 Type 4 – Type for Japan 212

E.4.1 Introduction 212

E.4.2 DC Characteristics 212

E.4.3 AC Characteristics 214

Annex F – ATU-x Classification and Performance for Region A (North America) 219

F.1 Classification definitions 219

F.2 Performance requirements 219

F.2.1 Crosstalk interference 220

F.2.2 Impulse noise 221

F.2.3 POTS 222

Annex G – ATU-x Classification and Performance for Region B (Europe) 223

G.1 Performance requirements 223

Appendix I – ATM Layer to Physical Layer Logical Interface 224

Appendix II – Dynamic (on-line) Rate Adaptation 226

II.1 Introduction 226

II.1.1 General concepts 227

IPR2025-00395
Petitioners' Exhibit 1011
Page 13 of 256

Page

II.2 DRA protocol and messages 227
II.2.1 DRA concept 227
II.2.2 DRA-AOC messages 227
II.3 Monitoring 228
II.3.1 DRA_Monitor_Request 228
II.3.2 DRA_Monitor_Reply 228
II.4 Configuration 229
II.4.1 DRA_Configuration_Request 229
II.4.2 DRA_Configuration_Reply 230
II.5 Exchange 231
II.5.1 DRA_Exchange_Request 231
II.5.2 DRA_Exchange_Reply 232
II.6 Swap 233
II.6.1 Example 235
II.6.2 DRA_Swap_Request 235
II.6.3 DRA_Swap_Reply 236
II.7 DRA state diagram 237
II.7.1 State machine conventions 237
II.7.2 ATU-R state machine 238
II.7.3 ATU-C state machine 239

Appendix III – Compatibility with other customer premises equipment 240

Appendix IV – Bibliography 240

IPR2025-00395
Petitioners' Exhibit 1011
Page 14 of 256

Recommendation G.992.1

ASYMMETRIC DIGITAL SUBSCRIBER LINE (ADSL) TRANSCEIVERS

(Geneva, 1999)

1 Scope

For interrelationships of this Recommendation with other G.99x-series Recommendations, see Recommendation G.995.1.

This Recommendation describes the interface between the telecommunications network and the customer installation in terms of their interaction and electrical characteristics. The requirements of this Recommendation apply to a single asymmetric digital subscriber line (ADSL).

ADSL provides a variety of bearer channels in conjunction with other services:

- ADSL service on the same pair with voiceband services (including POTS and voiceband data services). The ADSL occupies a frequency band above the voiceband, and is separated from it by filtering;
- ADSL on the same pair as ISDN as defined in Recommendation G.961 Appendices I and II. The ADSL occupies a frequency band above the ISDN, and is separated from it by filtering;
- ADSL service on the same pair with voiceband services (including POTS and voiceband data services), and with ISDN as defined in Recommendation G.961 Appendix III in an adjacent pair.

In the direction from the network operator to the customer premises (i.e. downstream), the bearer channels may consist of full duplex low-speed bearer channels and simplex high-speed bearer channels; in the other direction (i.e. upstream), only low-speed bearer channels are provided.

The transmission system is designed to operate on two-wire twisted metallic cable pairs with mixed gauges. This Recommendation is based on the use of cables without loading coils, but bridged taps are acceptable in all but a few unusual situations.

Specifically, this Recommendation:

- defines the combined options and ranges of the simplex and full-duplex bearer channels provided;
- defines the line code and the spectral composition of the signals transmitted by both ATU-C and ATU-R;
- specifies the transmit signals at both the ATU-C and ATU-R;
- describes the organization of transmitted and received data into frames;
- defines the functions of the operations channel;
- defines the ATU-R to service module(s) interface functions;
- defines the Transmission Convergence Sublayer for ATM transport.

In Annexes A, B and C it also:

- describes the transmission technique used to support the simultaneous transport on a single twisted-pair of voiceband services and both simplex and duplex bearer channels;
- describes the transmission technique used to support the simultaneous transport on a single twisted-pair of ISDN services as defined in Recommendation G.961 Appendices I and II, and both simplex and duplex bearer channels;

IPR2025-00395
Petitioners' Exhibit 1011
Page 15 of 256

- describes the transmission technique used to support the simultaneous transport on a single twisted-pair of voiceband services and both simplex and duplex bearer channels when they are subject to crosstalk from ISDN as defined in Recommendation G.961 Appendix III.

1.1 System reference model

The system reference model shown in Figure 1-1 illustrates the functional blocks required to provide ADSL service.

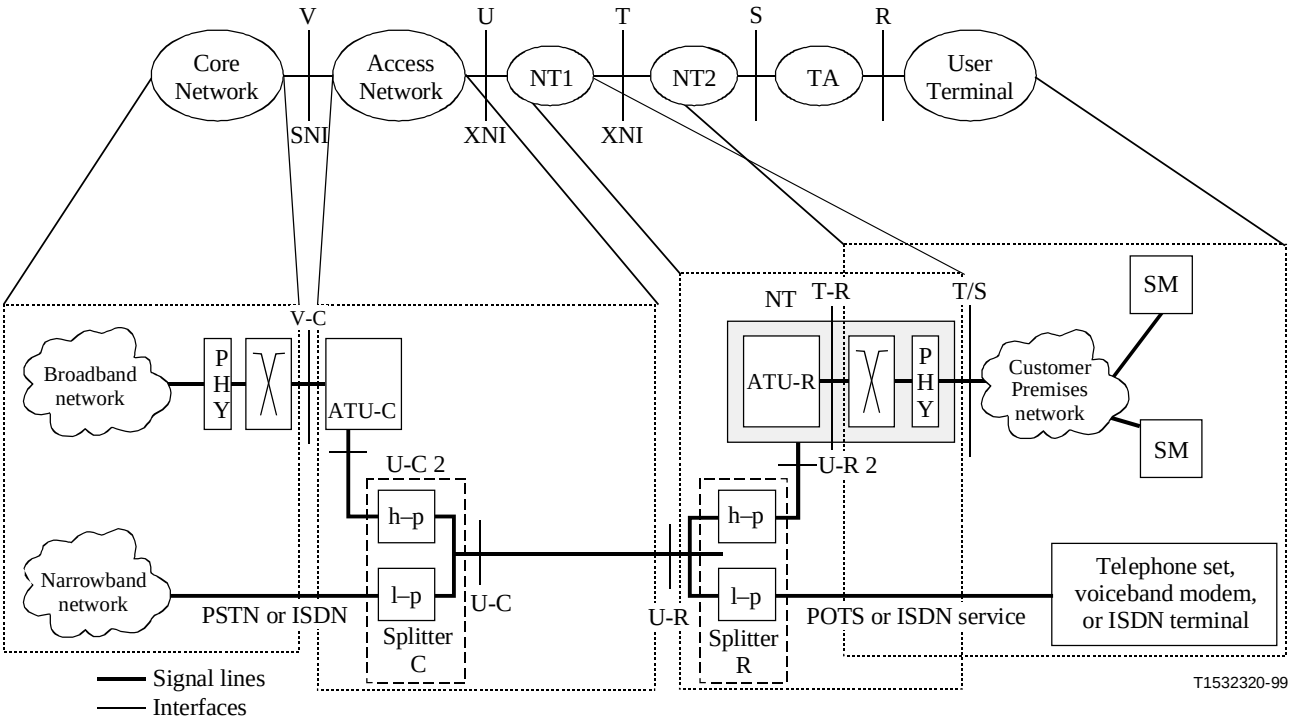

NOTE 1 – The U-C and U-R interfaces are fully defined in this Recommendation. The V-C and T-R interfaces are defined only in terms of logical functions, not physical. The T/S interface is not defined here.
NOTE 2 – The V-C interface may consist of interface(s) to one or more (STM or ATM) switching systems.
NOTE 3 – Implementation of the V-C and T-R interfaces is optional when interfacing elements are integrated into a common element.
NOTE 4 – One or other of the high-pass filters, which are part of the splitters, may be integrated into the ATU-x; if so, then the U-C 2 and U-R 2 interfaces become the same as the U-C and U-R interfaces, respectively.
NOTE 5 – A digital carrier facility (e.g. SONET extension) may be interposed at the V-C.
NOTE 6 – Due to the asymmetry of the signals on the line, the transmitted signals shall be distinctly specified at the U-R and U-C reference points.
NOTE 7 – The nature of the customer installation distribution and customer premises network (e.g. bus or star, type of media) is for further study.
NOTE 8 – More than one type of T-R interface may be defined, and more than one type of T/S interface may be provided from an ADSL NT (e.g. NT1 or NT2 types of functionalities).
NOTE 9 – A future issue of this Recommendation may deal with customer installation distribution and home network requirements.
NOTE 10 – Specifications for the splitters are given in Annex E.

Figure 1-1/G.992.1 – ADSL system reference model

1.2 Objectives

This Recommendation defines the minimal set of requirements to provide satisfactory simultaneous transmission between the network and the customer interface of a variety of high-speed simplex and low-speed duplex channels and other services such as POTS or ISDN. This Recommendation permits network providers an expanded use of existing copper facilities. All physical layer aspects required to ensure compatibility between equipment in the network and equipment at a remote

IPR2025-00395
Petitioners' Exhibit 1011
Page 16 of 256

location are specified. Equipment may be implemented with additional functions and procedures.

2 References

The following ITU-T Recommendations and other references contain provisions which, through reference in this text, constitute provisions of this Recommendation. At the time of publication, the editions indicated were valid. All Recommendations and other references are subject to revision; all users of this Recommendation are therefore encouraged to investigate the possibility of applying the most recent edition of the Recommendations and other references listed below. A list of the currently valid ITU-T Recommendations is regularly published.

– ITU-T Recommendation G.961 (1993), *Digital transmission system on metallic local lines for ISDN basic rate access*.

– ITU-T Recommendation G.994.1 (1999), *Handshake procedures for Digital Subscriber Line (DSL) transceivers*.

– ITU-T Recommendation G.996.1 (1999), *Test procedures for Digital Subscriber Line (DSL) transceivers*.

– ITU-T Recommendation G.997.1 (1999), *Physical layer management for Digital Subscriber Line (DSL) transceivers*.

– ITU-T Recommendation I.361 (1999), *B-ISDN ATM layer specification*.

– ITU-T Recommendation I.432.1 (1999), *B-ISDN user-network interface – Physical layer specification*: *General characteristics*.

For Annex B

– ETSI TS 102 080 V1.3.1 (1998), *Transmission and Multiplexing (TM); Integrated Services Digital Network (ISDN) basic rate access; Digital transmission system on metallic local lines*.

For Annex E

– ITU-T Recommendation G.117 (1996), *Transmission aspects of unbalance about earth*.

– ITU-T Recommendation Q.552 (1996), *Transmission characteristics at 2-wire analogue interfaces of digital exchanges*.

– ETSI ETS 300 001 ed.4 (1997), *Attachments to the Public Switched Telephone Network (PSTN); General technical requirements for equipment connected to an analogue subscriber interface in the PSTN*.

3 Definitions

This Recommendation defines the following terms:

3.1 ADSL Lines: See 5.1/G.997.1.

3.2 ADSL system overhead: All overhead needed for system control, including CRC, EOC, AOC synchronization bytes, fixed indicator bits for OAM, and FEC; that is, the difference between total data rate and net data rate.

IPR2025-00395
Petitioners' Exhibit 1011
Page 17 of 256

3.3 aggregate data rate: Data rate transmitted by an ADSL system in any one direction; it includes both net data rate and overhead used by the system for EOC, AOC, CRC check bytes, fixed indicator bits for OAM, synchronization control bytes and capacity for bearer channel synchronization control (i.e. $K_F + K_I$ times 32 kbit/s); it does not include Reed-Solomon FEC redundancy.

3.4 anomalies: An anomaly is a discrepancy between the actual and desired characteristics of an item. The desired characteristics may be expressed in the form of a specification. An anomaly may or may not affect the ability of an item to perform a required function. Performance anomalies are defined in 9.3.1.1 (see Figure 9-4).

3.5 bearer channel: A user data stream of a specified data rate that is transported transparently by an ADSL system.

3.6 bridged taps: Sections of unterminated twisted-pair cables connected in parallel across the cable under consideration.

3.7 category I: Basic category of transceivers with no performance-enhancing options, which meet a basic set of performance requirements.

3.8 category II: Category of transceivers with performance-enhancing options which meet an expanded set of performance requirements.

3.9 channelization: Allocation of the net data rate to bearer channels.

3.10 data frame: A grouping of bytes from fast and interleaved paths over a single symbol time period after addition of FEC bytes and after interleaving (at reference point C of Figure 7-5).

3.11 data symbol rate: The net average rate (after allowing for the overhead of the synchronization symbol) at which symbols carrying user data are transmitted (= 4 kbaud).

3.12 dBrn: Ratio (in decibels) of a power level with respect to a reference power of 1 pico-Watt (equivalent –90 dBm) (reference: Recommendation O.41 – Annex A).

3.13 defects: A defect is a limited interruption in the ability of an item to perform a required function. It may or may not lead to maintenance action depending on the results of additional analysis. Successive anomalies causing a decrease in the ability of an item to perform a required function are considered as a defect (see Figure 9-4).

3.14 DMT symbol: A set of complex values $\{Z_i\}$ forming the frequency domain inputs to the inverse discrete Fourier transform (IDFT) (see 7.11.2). The DMT symbol is equivalently the set of real valued time samples, $\{x_n\}$, related to the set of $\{Z_i\}$ via the IDFT.

3.15 downstream: The transport of data in the ATU-C to ATU-R direction.

3.16 dual latency: Simultaneous transport of multiple data bearer channels in any one direction, in which user data is allocated to both the fast and interleaved paths; that is, $\text{sum}(B_F) > 0$ and $\text{sum}(B_I) > 0$.

3.17 embedded operations channel: A component of ADSL system overhead which provides communications between management entities in the ATU-C and ATU-R. It includes both clear channel and stateful messaging modes.

3.18 far-end: Far-end means performance of the downstream loop-side received signal at the input of the ATU-R, where this performance is reported to the ATU-C in upstream indicators (see Figure 9-4), or performance of the upstream loop-side received signal at the input of the ATU-C, where this performance is reported to the ATU-R in downstream overhead indicators; this case is a mirror image of the above (see Figure 9-4).

IPR2025-00395
Petitioners' Exhibit 1011
Page 18 of 256

3.19 FEC output data frame: The grouping of bytes from fast or interleaved path over a single symbol time period after addition of FEC bytes and before interleaving (at reference point B, Figures 7-8, and 7-9).

3.20 indicator bits: Bits used for OAM purposes; embedded in the synchronization bytes.

3.21 loading coils: Inductors placed in series with the cable at regular intervals in order to improve the voiceband response; removed for DSL use.

3.22 Mux data frame: The grouping of bytes from fast or interleaved path over a single symbol time period before addition of FEC bytes and before interleaving (at reference point A, Figures 7-8 and 7-9).

3.23 near-end: Near-end means performance of the loop-side received signal at the input of the ATU (see Figure 9-4).

3.24 net data rate: Data rate that is available for user data in any one direction; for the downstream direction this is the sum of the net simplex and duplex data rates.

3.25 network timing reference: An 8 kHz timing marker used to support the distribution of a timing reference over the network.

3.26 primitives: Primitives are basic measures of performance, usually obtained from digital signal line codes and frame formats, or as reported in overhead indicators from the far-end. Performance primitives are categorized as events, anomalies and defects. Primitives may also be basic measures of other quantities (e.g. ac or battery power), usually obtained from equipment indicators (see Figure 9-4).

3.27 subcarrier: A particular complex valued input, Z_i, to the IDFT (see 7.11.2).

3.28 showtime: The state of either ATU-C or ATU-R – reached after all initialization and training is completed – in which user data is transmitted.

3.29 single latency: Simultaneous transport of one or more bearer channels in any one direction, in which all user data is allocated to either the fast or the interleaved path; that is, either $\text{sum}(B_F) > 0$ or $\text{sum}(B_I) > 0$.

3.30 splitter: Filter that separates the high frequency signals (ADSL) from the voiceband signals; (frequently called POTS splitter even though the voiceband signals may comprise more than POTS).

3.31 superframe: A grouping of 68 data symbols and one synchronization symbol, over a total time duration of 17 ms (see Figure 7-5).

3.32 symbol rate: The rate at which all symbols, including the synchronization symbol, are transmitted [(69/68)*4.0 = 4.0588 kbaud]; contrasted with the data symbol rate.

3.33 sync byte: An overhead byte present at the beginning of each mux data frame (called "fast" byte in the fast path and "sync" byte in the interleaved path).

3.34 sync frame: A frame with deterministic content sent in the 69th symbol of a superframe (called "synchronization symbol" in Figure 7-5).

3.35 thresholds: See clause 8/G.997.1.

3.36 Threshold Crossing Alert: See Recommendation G.997.1.

3.37 total data rate: Aggregate data rate plus FEC overhead.

3.38 upstream: The transport of data in the ATU-R to ATU-C direction.

3.39 voiceband: 0 to 4 kHz; expanded from the traditional 0.3 to 3.4 kHz to deal with voiceband data services wider than POTS.

3.40 voiceband services: POTS and all data services that use the voiceband or some part of it.

IPR2025-00395
Petitioners' Exhibit 1011
Page 19 of 256

4 Abbreviations

This Recommendation uses the following abbreviations:

ADC	Analogue-to-digital converter
ADSL	Asymmetric digital subscriber line
AEX	A(S) extension byte: byte inserted in the transmitted ADSL frame structure to provide Synchronization capacity that is shared among ASx bearer channels
AFE	Analogue Front End
AGC	Automatic gain control
AOC	ADSL overhead control channel
AS0 to AS3	Downstream simplex bearer channel designators
ASx	Any one of the simplex bearer channels AS0 to AS3
ATM	Asynchronous transfer mode
ATU	ADSL Transceiver Unit
ATU-C	ATU at the central office end (i.e. network operator)
ATU-R	ATU at the remote terminal end (i.e. CP)
ATU-x	Any one of ATU-C or ATU-R
BER	Bit Error Rate
B_F	The number of bytes per frame in a data stream allocated to the fast (i.e. non-interleaved) buffer
B_I	The number of bytes per frame in a data stream allocated to the interleaved buffer
B_i	Number of bits allocated to subcarrier index i
BRA	Basic rate access
C-B&G	Central Office Bits and Gains Information
CI	Customer installation
CLP	Cell Loss Priority
CO	Central office
CP	Customer Premises
CRC	Cyclic Redundancy Check
CRC-8f	Cyclic redundancy check using CRC-8-fast data
CRC-8i	Cyclic redundancy check using CRC-8-interleaved data
CSA	Carrier serving area
DAC	Digital-to-analogue converter
DB	Dual Bitmap (Annex C)
DC	Direct current
DF	Data Frame
DMT	Discrete multitone
DSL	Digital subscriber line
EC	Echo cancelling
EOC	Embedded operations channel (between the ATU-C and ATU-R)
ERL	Echo return loss
ES	Errored second

IPR2025-00395
Petitioners' Exhibit 1011
Page 20 of 256

FDM	Frequency-division multiplexing
FEBE	Far-end Block Error
FEBE-F	Binary indication of far-end block error count-fast data
FEBE-I	Binary indication of far-end block error count-interleaved data
FEC	Forward error correction
FECC-F	Binary indication of forward error correction count-fast data
FECC-I	Binary indication of forward error correction count-interleaved data
FEXT	Far-end crosstalk
FFEC	Far-end Forward Error Correction
FHEC	Far-end Header Error Check
FLCD	Far-end Loss of Cell Delineation
FNCD	Far-end No Cell Delineation
FOCD	Far-end Out of Cell Delineation
GF	Galois Field
GNTPDN	Grant Power Down
GSTN	General switched telephone network
HDSL	High bit rate digital subscriber line
HEC	Header error control
HPF	High pass filter
IB	Indicator Bit
ib0-23	Indicator bits
ID code	Vendor identification code
IDFT	Inverse discrete Fourier transform
ISDN	Integrated Services Digital Network
K_F	Number of bytes in a downstream (or upstream) fast mux data frame
K_I	Number of bytes in a downstream (or upstream) interleaved mux data frame
LCD	Loss of Cell Delineation
LEX	L(S) Extension byte: byte inserted in the transmitted ADSL frame structure to provide synchronization capacity that is shared among LSx and ASx bearer channels
LOF	Loss of frame defect
LOS	Loss-of-signal defect
LPR	Loss-of-power defect
LS0-2	DUPLEX bearer channel designators
LSB	Least significant bit
LSx	Any one of the duplex bearer channels LS0-2
LTR	Local timing reference
MC	Maximum count indication
MSB	Most significant bit
MTPR	Multitone power ratio
NCD	No cell delineation
NEXT	Near-end crosstalk

IPR2025-00395
Petitioners' Exhibit 1011
Page 21 of 256

N_F	Number of bytes in a downstream (or upstream) FEC output-fast data frame
N_I	Number of bytes in a downstream (or upstream) FEC output-interleaved data frame
NI	Network interface
NID	Network interface Device
NMS	Network Management System
n_{PCB}	Power cut-back index (See 10.4.5.1)
NT	Network termination
NTR	Network timing reference: 8 kHz reference to be transmitted downstream
OAM	Operations, administration and maintenance
OCD	Out of Cell Delineation
OSS	Operations Support System
PHY	Physical Layer
PMD/TC	Physical Media Dependent
POTS	Plain old telephone service; one of the services using the voiceband; sometimes used as a descriptor for all voiceband services
ppm	Parts per million
PRBS	Pseudo-random bit sequence
PRD	Pseudo-random downstream sequence
PRU	Pseudo-random upstream sequence
PSD	Power spectral density
PSTN	Public switched telephone network
QAM	Quadrature amplitude modulation
R-B&G	Remote End Bits and Gains Information
RDI	Remote Defect Indication
REJPDN	Reject Power Down
REQPDN	Request Power Down
rfi	Remote failure indication
R_F	Number of downstream (or upstream) FEC redundancy bytes for fast buffer
R_I	Number of downstream (or upstream) FEC redundancy bytes for interleaved buffer
rms	Root mean square
RRSI	Configuration parameters for FEC and interleaving
RS	Reed-Solomon
RT	Remote terminal
SB	Sync Byte
sc0-7	Synchronization control bit(s)
SEF	Severely errored frame
SM	Service module
SNR	Signal-to-Noise Ratio
SONET	Synchronous optical network
SPF	Superframe

IPR2025-00395
Petitioners' Exhibit 1011
Page 22 of 256

SRL	Singing return loss
STM	Synchronous transfer mode
SWB	Sliding Window Buffer (Annex C)
TC	Transmission convergence (sublayer)
TCM	Time Compression Multiplex
T-R	Interface(s) between ATU-R and switching layer (ATM or STM)
T/S	Interface(s) between ADSL network termination and CI or home network
TTR	TCM-ISDN Timing Reference (Annex C)
Tx	Transmitter
U-C	Loop interface-central office end
U-R	Loop interface-remote terminal end
UTC	Unable to comply
V-C	Logical interface between ATU-C and a digital network element such as one or more switching systems
ZHP	Impedance high-pass filter
4-QAM	4-point QAM (i.e. two bits per symbol)
⊕	Exclusive-or; modulo-2 addition

5 Reference Models

Figures 5-1 to 5-4 are not requirements or suggestions for building a DMT transmitter. Rather, they are models for facilitating accurate and concise DMT signal waveform descriptions. In the figures Z_i is DMT subcarrier i (defined in the frequency domain), and x_n is the nth IDFT output sample (defined in the time domain). The DAC and analogue processing block of Figures 5-1 to 5-4 construct the continuous transmit voltage waveform corresponding to the discrete digital input samples. More precise specifications for this analogue block arise indirectly from the analogue transmit signal linearity and power spectral density specifications of 7.13 and 7.14. The use of the figures as a transmitter reference model allows all initialization signal waveforms to be described through the sequence of DMT symbols, $\{Z_i\}$, required to produce that signal. Allowable differences in the characteristics of different digital-to-analogue and analogue processing blocks will produce somewhat different continuous-time voltage waveforms for the same initialization signal. However, a compliant transmitter will produce initialization signals whose underlying DMT subcarrier sequences match exactly those provided in the signal descriptions of 10.4 to 10.9.

5.1 ATU-C transmitter reference models

ATM and STM are application options. ATU-C and ATU-R may be configured for either STM bit sync transport or ATM cell transport. Hybrid configurations (i.e. some applications run over ATM, some do not, simultaneously) are outside the scope of this Recommendation.

If the U-C interface is STM bit sync based (i.e. no ATM cells on U-C interface), the ATU-C is configured for STM transport and shall comply to 5.1.1, 6.1 and 7.1. If the U-C interface is ATM cell based (i.e. only ATM cells on U-C interface), the ATU-C is configured for ATM transport and shall comply to 5.1.2, 6.2 and 7.2.

If the U-R interface is STM bit sync based (i.e. no ATM cells on U-R interface), the ATU-R is configured for STM transport and shall comply to 5.2.1, 6.1 and 8.1. If the U-R interface is ATM cell based (i.e. only ATM cells on U-R interface), the ATU-R is configured for ATM transport and shall comply to 5.2.2, 6.2 and 8.2.

IPR2025-00395
Petitioners' Exhibit 1011
Page 23 of 256

5.1.1 ATU-C transmitter reference model for STM transport

Figure 5-1 is a block diagram of an ADSL Transceiver Unit-Central office (ATU-C) transmitter showing the functional blocks and interfaces that are referenced in this Recommendation for the downstream transport of STM data.

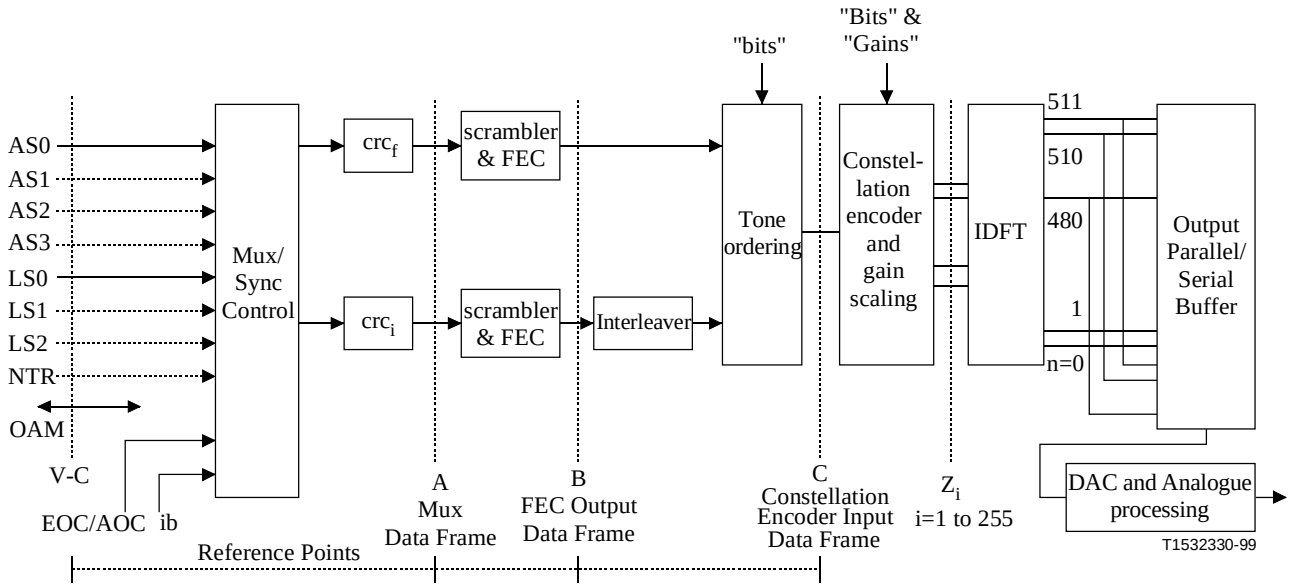

NOTE – Solid versus dashed lines are used to indicate required versus optional capabilities respectively. This figure is not intended to be complete in this respect, see clauses 6 and 7 for specific details.

Figure 5-1/G.992.1 – ATU-C transmitter reference model for STM transport

Support of STM is optional; if it is provided, however, the following requirements shall be met:

- The basic STM transport mode is bit serial.
- The framing mode used determines if byte boundaries, if present at the V-C interface, shall be preserved.
- Outside the ASx/LSx serial interfaces data bytes are transmitted MSB first. All serial processing in the ADSL frame (e.g. CRC, scrambling, etc.) shall, however, be performed LSB first, with the outside world MSB considered by the ADSL as LSB. As a result, the first incoming bit (outside world MSB) shall be the first processed bit inside the ADSL (ADSL LSB).
- ADSL equipment shall support at least bearer channels AS0 and LS0 downstream as defined in 6.1. Support of other bearer channels is optional.
- Two paths are shown between the Mux/Sync control and Tone ordering; the "fast" path provides low latency; the interleaved path provides very low error rate and greater latency. The allocation of user data at the V-C interface to these paths is defined in 7.4. An ADSL system supporting STM shall be capable of operating in a dual latency mode for the downstream direction, in which user data is allocated to both paths (i.e. fast and interleaved), and a single latency mode for both the downstream and upstream directions, in which all user data is allocated to one path (i.e. fast or interleaved). An ADSL system supporting STM transport may be capable of operating in an optional dual latency mode for the upstream, in which user data is allocated to both paths (i.e. fast and interleaved).

IPR2025-00395
Petitioners' Exhibit 1011
Page 24 of 256

5.1.2 ATU-C transmitter reference model for ATM transport

Figure 5-2 is a block diagram of an ADSL Transceiver Unit-Central office (ATU-C) transmitter showing the functional blocks and interfaces that are referenced in this Recommendation for the downstream transport of ATM data.

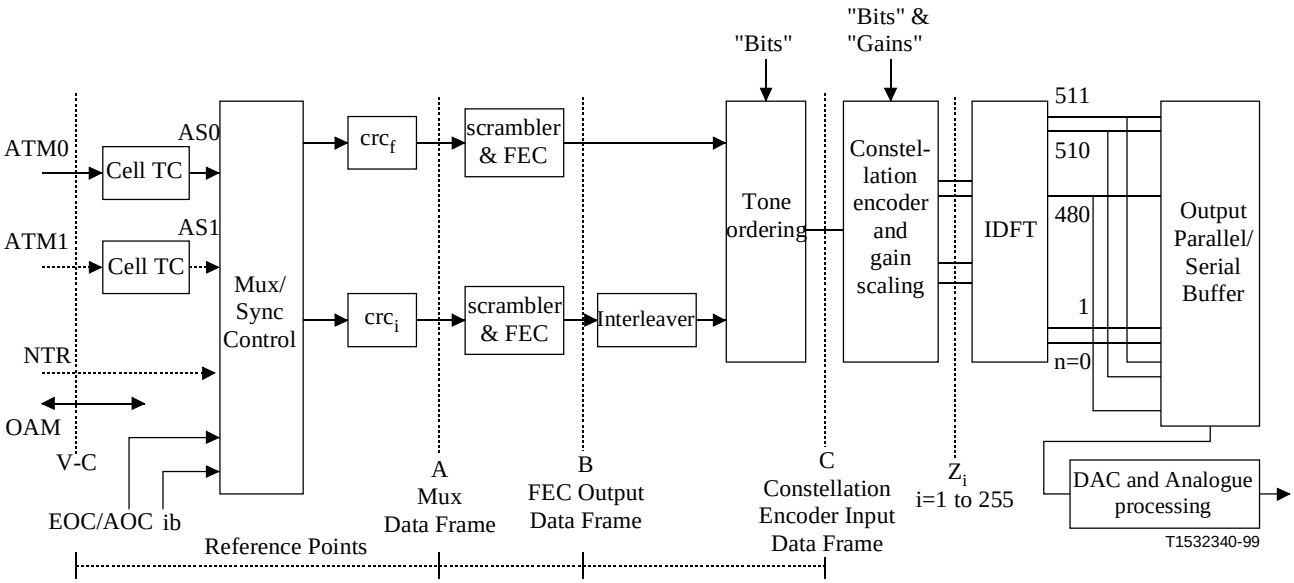

NOTE – Solid versus dashed lines are used to indicate required versus optional capabilities respectively. This figure is not intended to be complete in this respect, see clauses 6 and 7 for specific details.

Figure 5-2/G.992.1 – ATU-C transmitter reference model for ATM transport

Support of ATM is optional; if it is provided, however, the following requirements shall be met:

- Byte boundaries at the V-C interface shall be preserved in the ADSL data frame.
- Outside the ASx/LSx serial interfaces data bytes are transmitted MSB first. All serial processing in the ADSL frame (e.g. CRC, scrambling, etc.) shall, however, be performed LSB first, with the outside world MSB considered by the ADSL as LSB. As a result, the first incoming bit (outside world MSB) will be the first processed bit inside the ADSL (ADSL LSB), and the CLP bit of the ATM cell header will be carried in the MSB of the ADSL frame byte (i.e. processed last).
- ADSL equipment shall support at least bearer channel AS0 downstream as defined in 6.2. Support of other bearer channels is optional.
- Two paths are shown between the Mux/Sync control and Tone ordering; the "fast" path provides low latency; the interleaved path provides very low error rate and greater latency. The allocation of user data at the V-C interface to these paths is defined in clause 7. An ADSL system supporting ATM transport shall be capable of operating in a single latency mode, in which all user data is allocated to one path (i.e. fast or interleaved). An ADSL system supporting ATM transport may be capable of operating in an optional dual latency mode, in which user data is allocated to both paths (i.e. fast and interleaved).

IPR2025-00395
Petitioners' Exhibit 1011
Page 25 of 256

5.2 ATU-R transmitter reference models

5.2.1 ATU-R transmitter reference model for STM transport

Figure 5-3 is a block diagram of an ATU-R transmitter showing the functional blocks and interfaces that are referenced in this Recommendation for the upstream transport of STM data.

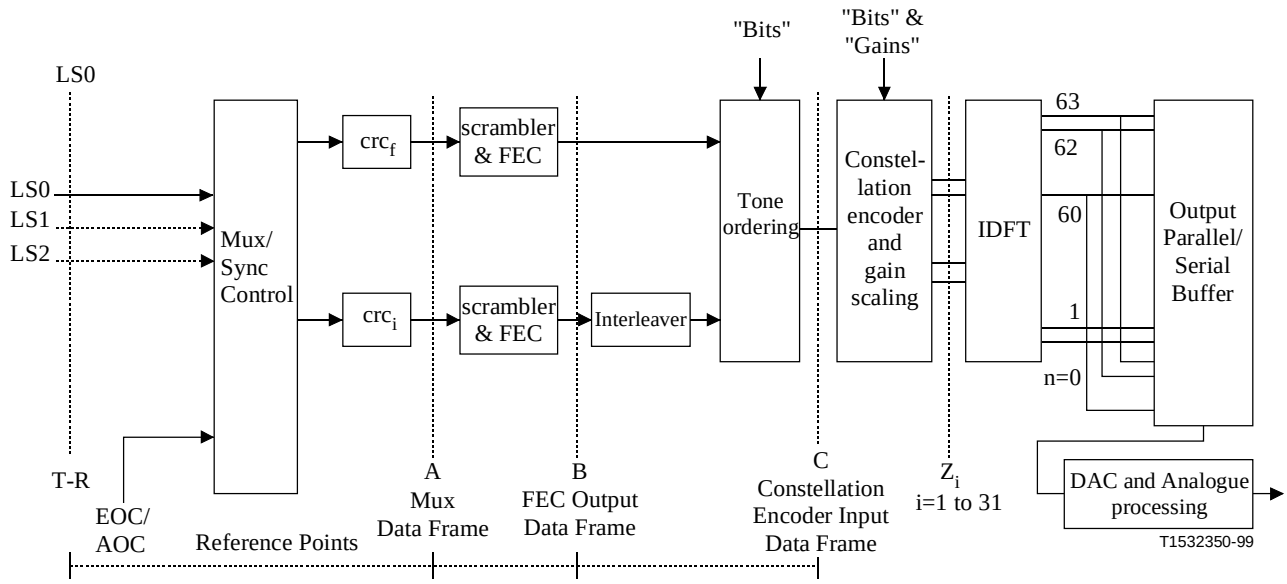

NOTE – Solid versus dashed lines are used to indicate required versus optional capabilities respectively. This figure is not intended to be complete in this respect, see clauses 6 and 8 for specific details.

Figure 5-3/G.992.1 – ATU-R transmitter reference model for STM transport

Support of STM is optional; if it is provided, however, the following requirements shall be met:

- The basic STM transport mode is bit serial.
- The framing mode used determines if byte boundaries, if present at the T-R interface, shall be preserved.
- Outside the LSx serial interfaces data bytes are MSB transmitted first. All serial processing in the ADSL frame (e.g. CRC, scrambling, etc.) shall, however, be performed LSB first, with the outside world MSB considered by the ADSL as LSB. As a result, the first incoming bit (outside world MSB) will be the first processed bit inside the ADSL (ADSL LSB).
- ADSL equipment shall support at least bearer channel LS0 upstream as defined in 6.1. Support of other bearer channels is optional.
- Two paths are shown between the Mux/Sync control and Tone ordering; the "fast" path provides low latency; the interleaved path provides very low error rate and greater latency. The allocation of user data at the T-R interface to these paths is defined in 8.4. An ADSL system supporting STM shall be capable of operating in a dual latency mode for the downstream direction, in which user data is allocated to both paths (i.e. fast and interleaved), and a single latency mode for both the downstream and upstream directions, in which all user data is allocated to one path (i.e. fast or interleaved). An ADSL system supporting STM transport may be capable of operating in an optional dual latency mode for the upstream, in which user data is allocated to both paths (i.e. fast and interleaved).

IPR2025-00395
Petitioners' Exhibit 1011
Page 26 of 256

5.2.2 ATU-R transmitter reference model for ATM transport

Figure 5-4 is a block diagram of an ATU-R transmitter showing the functional blocks and interfaces that are referenced in this Recommendation for the upstream transport of ATM data.

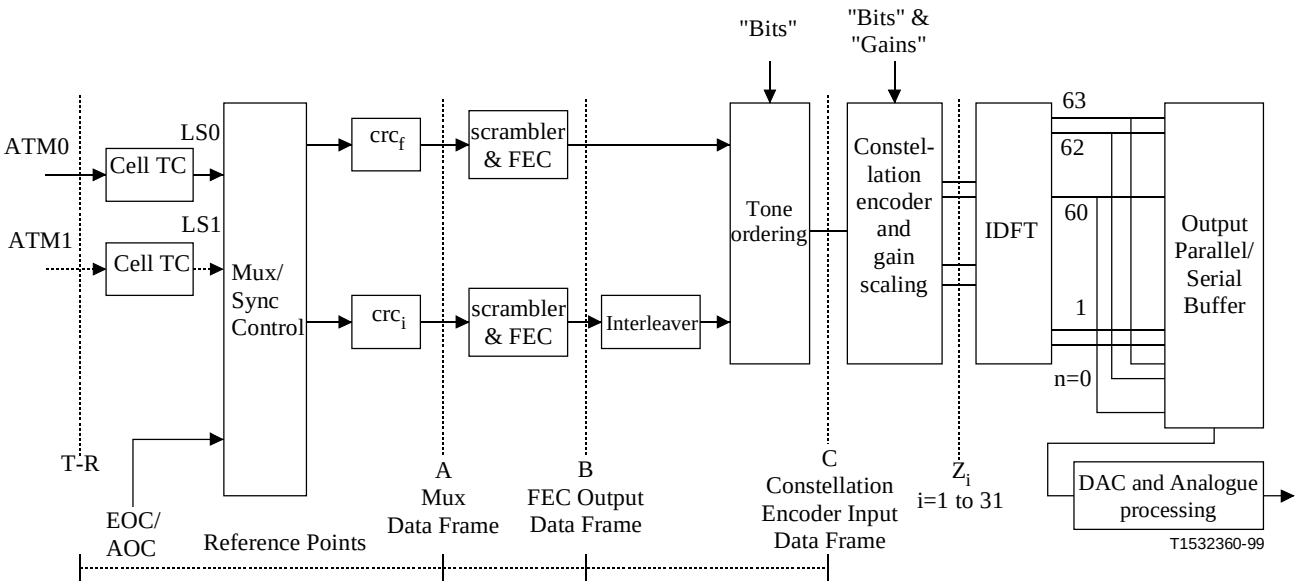

NOTE – Solid versus dashed lines are used to indicate required versus optional capabilities respectively. This figure is not intended to be complete in this respect, see clauses 6 and 8 for specific details.

Figure 5-4/G.992.1 – ATU-R transmitter reference model for ATM transport

Support of ATM is optional; if it is provided, however, the following requirements shall be met:

- Byte boundaries at the T-R interface shall be preserved in the ADSL data frame.
- Outside the LSx serial interfaces data bytes are transmitted MSB first in accordance with Recommendations I.361 and I.432.1. All serial processing in the ADSL frame (e.g. CRC, scrambling, etc.) shall, however, be performed LSB first, with the outside world MSB considered by the ADSL as LSB. As a result, the first incoming bit (outside world MSB) will be the first processed bit inside the ADSL (ADSL LSB), and the CLP bit of the ATM cell header will be carried in the MSB of the ADSL frame byte (i.e. processed last).
- ADSL equipment shall support at least bearer channel LS0 upstream as defined in 6.2. Support of other bearer channels is optional.
- Two paths are shown between the Mux/Sync control and Tone ordering; the "fast" path provides low latency; the interleaved path provides very low error rate and greater latency. The allocation of user data at the T-R interface to these paths is defined in 8.4. An ADSL system supporting ATM transport shall be capable of operating in a single latency mode, in which all user data is allocated to one path (i.e. fast or interleaved). An ADSL system supporting ATM transport may be capable of operating in an optional dual latency mode, in which user data is allocated to both paths (i.e. fast and interleaved).

5.3 ATU-C/R transmitter timing model (Annex C only)

For Annex C, see C.3.3.

IPR2025-00395
Petitioners' Exhibit 1011
Page 27 of 256

6 Transport capacity

An ADSL system may transport up to seven user data streams on seven bearer channels simultaneously:

- up to four independent downstream simplex bearers [unidirectional from the network operator (i.e. V-C interface) to the CI (i.e. T-R interface)];
- up to three duplex bearers (bidirectional between the network operator and the CI).

The three duplex bearers may alternatively be configured as independent unidirectional simplex bearers, and the rates of the bearers in the two directions (network operator toward CI and vice versa) do not need to match.

All bearer channel data rates shall be programmable in any combination of integer multiples of 32 kbit/s. The ADSL data multiplexing format is flexible enough to allow other transport data rates, such as channelizations based on existing 1.544 Mbit/s, but the support of these data rates (non-integer multiples of 32 kbit/s) will be limited by the ADSL system's available capacity for synchronization (see Notes 1 and 2).

The maximum net data rate transport capacity of an ADSL system will depend on the characteristics of the loop on which the system is deployed, and on certain configurable options that affect overhead (see Note 3). The ADSL bearer channel rates shall be configured during the initialization and training procedure.

The transport capacity of an ADSL system per se is defined only as that of the bearer channels. When, however, an ADSL system is installed on a line that also carries POTS or ISDN signals, the overall capacity is that of POTS or ISDN plus ADSL.

A distinction is made between the transport of synchronous (STM) and asynchronous (ATM) data. An ATU-x shall be configured to support STM transmission or ATM transmission. If STM is supported, it shall be as defined in 6.1 and either 7.1 (ATU-C) or 8.1 (ATU-R). If ATM is supported, it shall be as defined in 6.2 and either 7.2 (ATU-C) or 8.2 (ATU-R). Bearer channels configured to transport STM data can also be configured to carry ATM data. ADSL equipment may be capable of simultaneously supporting both ATM and STM transport, but is otherwise outside the scope of this Recommendation.

If an ATU-x supports a particular bearer channel, it shall support it through both the fast and interleaved paths.

In addition, an ADSL system may transport a Network Timing Reference (NTR). The means for doing this are specified in 7.2.4.

NOTE 1 – Part of the ADSL system overhead is shared among the bearer channels for synchronization. The remainder of each channel's data rate that exceeds a multiple of 32 kbit/s is transported in this shared overhead. Only framing mode 0 supports non-integer multiples of 32 kbit/s.

NOTE 2 – The rates for all bearer channels are based on integer multiples of 32 kbit/s. ADSL deployments may, however, need to interwork with DS1 (1.544 Mbit/s) data. The ADSL system overhead and data synchronization (see 6.4.2) provide enough capacity to support the framed DS1 data streams transparently (i.e. the entire DS1 signal is passed through the ADSL transmission path without interpretation or removal of the framing bits and other overhead).

NOTE 3 – One part of the ADSL initialization and training sequence estimates the loop characteristics to determine whether the number of bytes per Discrete MultiTone (DMT) frame required for the requested configuration's aggregate data rate can be transmitted across the given loop. The net data rate is then the aggregate data rate minus ADSL system overhead. Part of the ADSL system overhead is dependent on the configurable options, such as allocation of bearer channels to interleaving or non-interleaving data buffers within the ADSL frame (discussed in 7.4 and 8.4), and part of it is fixed.

NOTE 4 – The latency mode of an ADSL system may be different for downstream and upstream transmission.

IPR2025-00395
Petitioners' Exhibit 1011
Page 28 of 256

6.1 Transport of STM data

ADSL systems transporting STM shall support the simplex bearer channel AS0 and the duplex bearer channel LS0 downstream; support of AS1, AS2, AS3, LS1 and LS2 is optional. Bearer channels AS0, LS0, and any other bearer channels supported shall be independently allocable to a particular latency path as selected by the ATU-C at start-up. The system shall support dual-latency downstream.

ADSL systems transporting STM shall support the duplex bearer channel LS0 upstream using a single latency path; support of LS1 and LS2 and dual latency is optional.

Bearer channel AS0 shall support the transport of data at all integer multiples of 32 kbit/s from 32 kbit/s to 6.144 Mbit/s. Bearer channel LS0 shall support 16 kbit/s and all integer multiples of 32 kbit/s from 32 kbit/s to 640 kbit/s.

When AS1, AS2, AS3, LS1 and LS2 are provided, they shall support the range of integer multiples of 32 kbit/s shown in Table 6-1. Support for integer multiples beyond those required and indicated therein is optional. Further, support for data rates based on non-integer multiples of 32 kbit/s is also optional.

Table 6-1/G.992.1 – Required 32 kbit/s integer multiples for transport of STM

Bearer channel	Lowest Required Integer Multiple	Largest Required Integer Multiple	Corresponding Highest Required Data Rate (kbit/s)
AS0	1	192	6144
AS1	1	144	4608
AS2	1	96	3072
AS3	1	48	1536
LS0	1	20	640
LS1	1	20	640
LS2	1	20	640

Table 6-2 illustrates the data rate terminology and definitions used for STM transport. The reference points refer to those shown in Figures 5-1 through 5-4.

Table 6-2/G.992.1 – Data Rate Terminology for STM transport

Data Rate						Equation (kbit/s)	Reference Point
		STM data rate	=	"Net data rate"		$\Sigma(B_I, B_F) \times 32$ (Note)	ASx + LSx
"Net data rate"	+	Frame overhead rate	=	"Aggregate data rate"		$\Sigma(K_I, K_F) \times 32$	A
"Aggregate data rate"	+	RS Coding overhead rate	=	"Total data rate"		$\Sigma(N_I, N_F) \times 32$	B
"Total data rate"	+	Trellis Coding overhead rate	=	Line rate		$\Sigma\, b_i \times 4$	U
NOTE – Net data rate increase by 16 kbit/s if a 16 kbit/s "C"-channel is used.							

IPR2025-00395
Petitioners' Exhibit 1011
Page 29 of 256

6.2 Transport of ATM data

An ADSL system transporting ATM shall support the single latency mode (Note 1) at all integer multiples of 32 kbit/s up to 6.144 Mbit/s downstream and up to 640 kbit/s upstream. For single latency, ATM data shall be mapped to bearer channel AS0 in the downstream direction and to bearer channel LS0 in the upstream direction. Single latency is defined as all payload data passing through a single latency path. It is important to note that with framing modes 0,1 and 2, overhead data exists in both latency paths even though the payload is allocated to a single latency path.

The need for dual latency for ATM services depends on the service/application profile and is under study. One of three different "latency classes" may be used via:

- single latency, not necessarily the same for each direction of transmission;
- dual latency downstream, single latency upstream;
- dual latency both upstream and downstream.

ADSL systems transporting ATM shall support bearer channel AS0 downstream and bearer channel LS0 upstream, with each of these bearer channels independently allocable to a particular latency path as selected by the ATU-C at start-up. Therefore, support of dual latency is optional for both downstream and upstream.

If downstream ATM data are transmitted through a single latency path (i.e. "fast" only or "interleaved" only), only bearer channel AS0 shall be used, and it shall be allocated to the appropriate latency path. If downstream ATM data are transmitted through both latency paths (i.e. "fast" and "interleaved"), only bearer channels AS0 and AS1 shall be used, and they shall be allocated to different latency paths.

Similarly, if upstream ATM data are transmitted through a single latency path (i.e. "fast" only or "interleaved" only), only bearer channel LS0 shall be used and it shall be allocated to the appropriate latency path. The choice of the fast or interleaved path may be made independently of the choice for the downstream data. If upstream ATM data are transmitted through both latency paths (i.e. "fast" and "interleaved"), only bearer channels LS0 and LS1 shall be used and they shall be allocated to different latency paths.

Bearer channel AS0 shall support the transport of data at all integer multiples of 32 kbit/s from 32 kbit/s to 6.144 Mbit/s. Bearer channel LS0 shall support all integer multiples of 32 kbit/s from 32 kbit/s to 640 kbit/s. Support for data rates based on non-integer multiples of 32 kbit/s is also optional.

When AS1 and LS1 are provided, they shall support the range of integer multiples of 32 kbit/s shown in Table 6-1. Support for integer multiples beyond those required and indicated in Table 6-1 is optional. Further, support for data rates based on non-integer multiples of 32 kbit/s is also optional.

Bearer channels AS2, AS3 and LS2 shall not be provided for an ATM based ATU-x.

NOTE 1 – For ATM systems, the channelization of different payloads is embedded within the ATM data stream using different Virtual Paths and/or Virtual Channels. Therefore the basic requirements for ATM are for only one ADSL bearer channel downstream and only one ADSL bearer channel upstream.

NOTE 2 – More details of the ATM to Physical layer logical interface are given in Appendix I.

Table 6-3 illustrates the data rate terminology and definitions used for ATM transport. The reference points refer to those shown in Figures 5-1 through 5-4.

IPR2025-00395
Petitioners' Exhibit 1011
Page 30 of 256

Table 6-3/G.992.1 – Data rate terminology for ATM transport

Data Rate					Equation (kbit/s)	Reference Point
53 × 8 × ATM cell rate			=	"Net data rate"	$\Sigma(B_I, B_F) \times 32$	ASx + LSx
"Net data rate"	+	Frame overhead rate	=	"Aggregate data rate"	$\Sigma(K_I, K_F) \times 32$	A
"Aggregate data rate"	+	RS Coding overhead rate	=	"Total data rate"	$\Sigma(N_I, N_F) \times 32$	B
"Total data rate"	+	Trellis Coding overhead rate	=	Line rate	$\Sigma\, b_i \times 4$	U

6.3 ADSL system overheads and total bit rates

The total bit rate transmitted by the ADSL system when operating in an optional reduced-overhead framing mode shall include capacity for:

- the data rate transmitted in the ADSL bearer channels;
- ADSL system overhead, which includes:
  - an ADSL embedded operations channel, EOC;
  - an ADSL overhead control channel, AOC;
  - CRC check bytes;
  - fixed indicator bits for OAM;
  - FEC redundancy bytes.

When operating in the full-overhead mode, the total bit rate shall also include capacity for the synchronization control bytes and capacity for bearer channel synchronization control.

The above data streams shall be organized into ADSL frames and superframes as defined in 7.4 and 8.4 for the downstream and upstream data, respectively.

The internal overhead channels and their rates are shown in Table 6-4.

IPR2025-00395
Petitioners' Exhibit 1011
Page 31 of 256

Table 6-4/G.992.1 – Internal overhead channel functions and rates

	Downstream rate (kbit/s) minimum/maximum		Upstream rate (kbit/s) minimum/maximum	
	Number of ASx bearer channels > 1	**Number of ASx bearer channels = 1**	**Number of LSx bearer channels > 1**	**Number of LSx bearer channels = 1**
Synchronization control, CRC and AOC; interleaved buffer	32/32	32/32	32/32	32/32
Synchronization control, CRC, EOC and indicator bits; fast buffer	32/32	32/32	32/32	32/32
Total for reduced overhead framing	32/64 (Note 2)	32/64 (Note 2)	32/64 (Note 2)	32/64 (Note 2)
Synchronization capacity (shared among all bearer channels)	64/128 (Note 3)	64/96 (Note 3)	32/64 (Note 3)	32/32 (Note 3)
Total (Note 1)	128/192	128/160	96/128	96/96

NOTE 1 – The overhead required for FEC is not shown in this table.

NOTE 2 – With the reduced overhead framing modes, a 32 kbit/s ADSL system overhead is present in each buffer type. However, when all ASx and LSx are allocated to one buffer type, synchronization control, CRC, EOC, AOC and indicator bits may be carried in a single 32 kbit/s ADSL system overhead present in the buffer type used. With full overhead framing, a 32 kbit/s ADSL system overhead is always present in each buffer type.

NOTE 3 – The shared synchronization capacity includes 32 kbit/s shared among LSx within the interleave buffer, 32 kbit/s shared among LSx within the fast buffer, 32 kbit/s shared among ASx within the interleave buffer, and 32 kbit/s shared among ASx within the fast buffer. The maximum rate occurs when at least one ASx is allocated to each type of buffer; the minimum rate occurs when all ASx and LSx are allocated to one buffer type.

7 ATU-C functional characteristics

An ATU-C may support STM transmission or ATM transmission or both. If STM is supported it shall be as defined in 7.1. If ATM is supported it shall be as defined in 7.2.

Framing modes that shall be supported depend upon the ATU-C being configured for either STM or ATM transport, and are defined in 7.1.5 and 7.2.4 respectively. If framing mode k is supported, then modes k-1, …, 0 shall also be supported.

During initialization, the ATU-C and ATU-R shall indicate a framing mode number 0, 1, 2 or 3 which they intend to use. The lowest indicated framing mode shall be used (see 10.6.4 and 10.7.6).

Using framing mode 0 ensures than an STM based ATU-x with an external ATM TC will interoperate with an ATM based ATU-x. Additional modes of interoperation are possible depending upon optional features provided in either ATU-x.

An ATU-C may provide a Network Timing Reference (NTR). This operation shall be independent of any clocking that is internal to the ADSL system. If provided, the NTR shall be inserted in the U-C framing structure as described in 7.3.2.

IPR2025-00395
Petitioners' Exhibit 1011
Page 32 of 256

7.1 STM Transmission Protocol Specific functionalities

7.1.1 ATU-C input and output V interfaces for STM transport

The functional data interfaces at the ATU-C for STM transport are shown in Figure 7-1. Input interfaces for the high-speed downstream simplex bearer channels are designated AS0 through AS3; input/output interfaces for the duplex bearer channels are designated LS0 through LS2. There shall also be a duplex interface for operations, administration, maintenance (OAM) and control of the ADSL system.

The data rates of the input and output data interfaces at the ATU-C are specified in 6.1. The data rate at a given interface shall match the rate of the bearer channel configured to that interface.

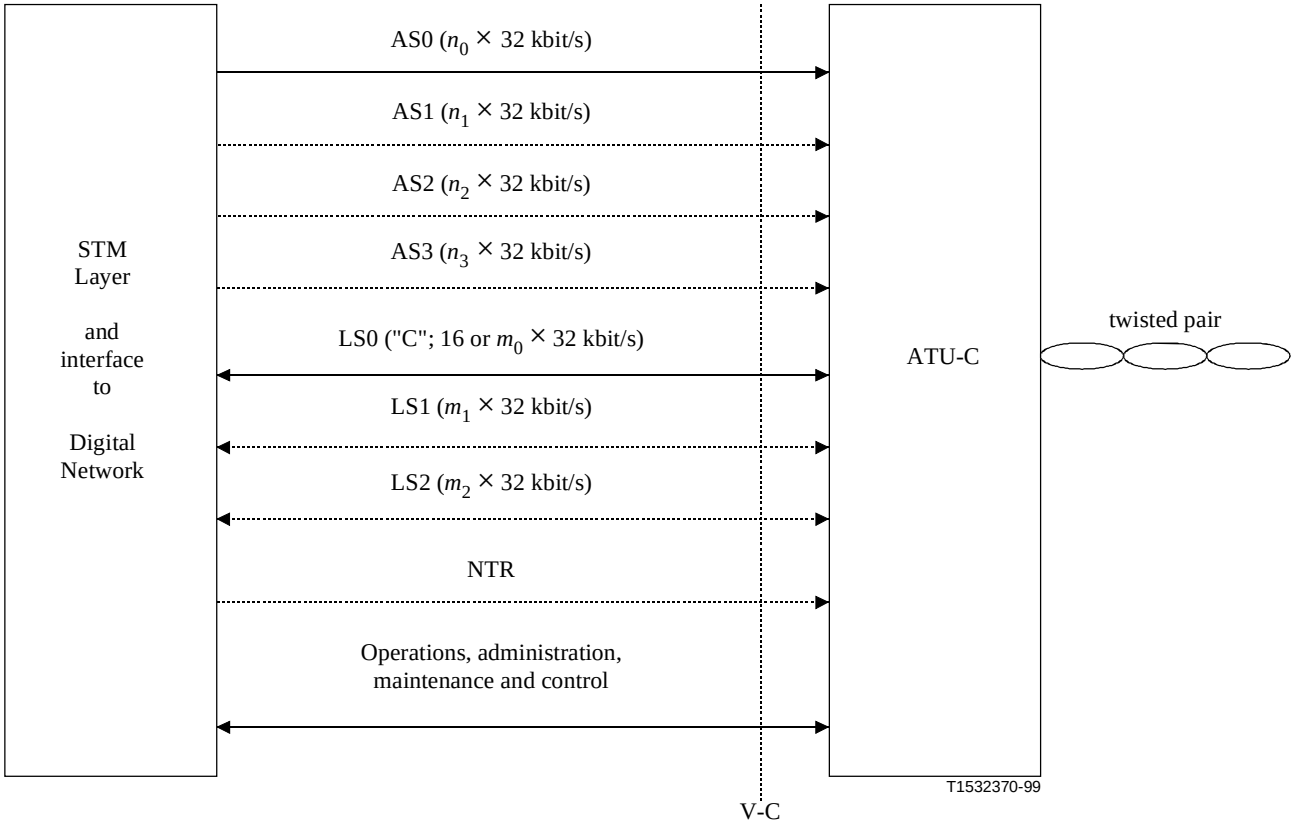

NOTE – Optional bearer channels (both duplex and simplex) and features are shown with dotted lines.

Figure 7-1/G.992.1 – ATU-C functional interfaces for STM transport at the V-C reference point

7.1.2 Downstream simplex channels – bit rates

Four data input interfaces are defined at the ATU-C for the high-speed downstream simplex channels: AS0, AS1, AS2 and AS3 (ASx in general). The required data rate configurations are specified in 6.1.

7.1.3 Downstream/upstream duplex channels – bit rates

Three input and output data interfaces are defined at the ATU-C for the duplex channels supported by the ADSL system; LS0, LS1, and LS2 (LSx in general). The required data rate configurations are specified in 6.1.

IPR2025-00395
Petitioners' Exhibit 1011
Page 33 of 256

LS0 is also known as the "C" or control channel. It carries the signalling associated with the ASx bearer channels and it may also carry some or all of the signalling associated with the other duplex bearer channels.

7.1.4 Payload transfer delay

The one-way transfer delay for payload bits in all bearers (simplex and duplex) from the V reference point at central office end (V-C) to the T reference point at remote end (T-R) for channels assigned to the fast buffer shall be no more than 2 ms, and for channels assigned to the interleave buffer it shall be no more than $(4 + (S - 1)/4 + SxD/4)$ ms, where S and D are defined in 7.6. The same requirement applies in the opposite direction, from the T-R reference point to the V-C reference point.

7.1.5 Framing Structure for STM transport

An ATU-C configured for STM transport shall support the full overhead framing structure 0 as specified in 7.4. The support of full overhead framing structure 1 and the reduced overhead framing structures 2 and 3 is optional.

Preservation of V-C interface byte boundaries (if present) at the U-C interface may be supported for any of the U-C interface framing structures.

An ATU-C configured for STM transport may support insertion of a Network Timing Reference (NTR). If inserted, the NTR shall be inserted in the U-C framing structure as described in 7.3.2.

7.2 ATM Transport Protocol Specific functionalities

7.2.1 ATU-C input and output V interface for ATM transport

The functional data interfaces at the ATU-C for ATM are shown in Figure 7-2. The ATM channel ATM0 shall always be provided, the channel ATM1 is optional and may be provided for support of dual latency mode. Each channel operates as an interface to a physical layer pipe. When operating in dual latency mode, no fixed allocation between the ATM channels 0 and 1, on one hand, and transport of "fast" and "interleaved" data, on the other hand, is assumed. This relationship is configured inside the ATU-C.

Flow control functionality shall be available on the V reference point to allow the ATU-C (i.e. the physical layer) to control the cell flow to and from the ATM layer. This functionality is represented by Tx_Cell_Handshake and Rx_Cell_Handshake. A cell may be transferred from ATM to PHY layer only after the ATU-C has activated the Tx_Cell_Handshake. Similarly a cell may be transferred from the PHY layer to the ATM layer only after the Rx_Cell_Handshake. This functionality is important to avoid cell overflow or underflow in the ATU-C and ATM layers.

There shall also be a duplex interface for operations, administration, maintenance (OAM) and control of the ADSL system.

IPR2025-00395
Petitioners' Exhibit 1011
Page 34 of 256

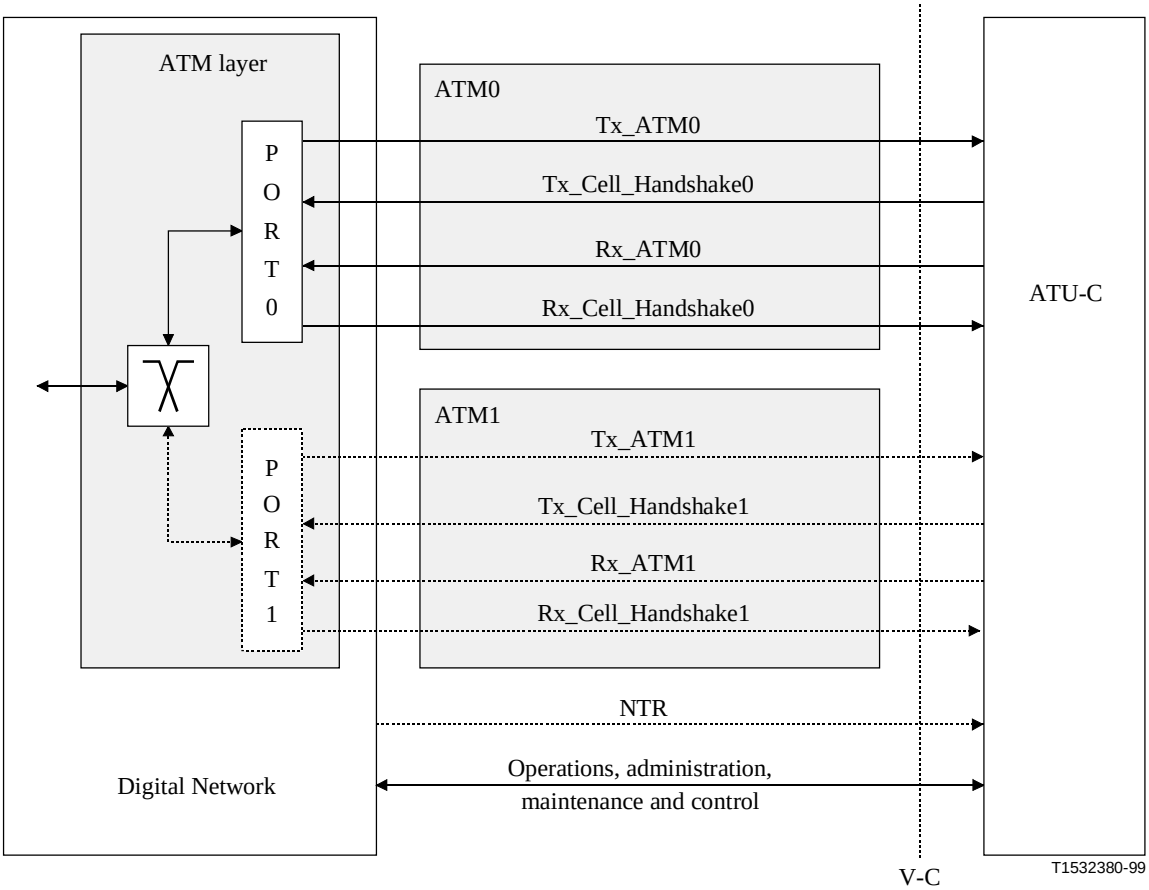

Figure 7-2/G.992.1 – ATU-C functional interfaces to the ATM layer at the V-C reference point

7.2.2 Payload transfer delay

The one-way transfer delay (excluding cell specific functionalities) for payload bits in all bearers (simplex and duplex) from the V reference point at central office end (V-C) to the T reference point at remote end (T-R) for channels assigned to the fast buffer shall be no more than 2 ms, and for channels assigned to the interleave buffer it shall be no more than $(4 + (S - 1)/4 + SxD/4)$ ms, where S and D are defined in 7.6. The same requirement applies in the opposite direction, from the T-R reference point to the V-C reference point.

NOTE – The additional delay introduced by the cell specific functionalities is implementation specific.

7.2.3 ATM Cell specific functionalities

7.2.3.1 Idle Cell Insertion

Idle cells shall be inserted in the transmit direction for cell rate decoupling. Idle cells are identified by the standardized pattern for the cell header given in Recommendation I.432.1.

NOTE – This Recommendation is written on the assumption that idle cells will be discarded by an ATU-R receiver.

7.2.3.2 Header Error Control (HEC) Generation

The HEC byte shall be generated in the transmit direction as described in Recommendation I.432.1, including the recommended modulo 2 addition (XOR) of the pattern 01010101_2 to the HEC bits.

IPR2025-00395
Petitioners' Exhibit 1011
Page 35 of 256

The generator polynomial coefficient set used and the HEC sequence generation procedure shall be in accordance with Recommendation I.432.1.

7.2.3.3 Cell payload scrambling

Scrambling of the cell payload field shall be used in the transmit direction to improve the security and robustness of the HEC cell delineation mechanism. In addition, it randomizes the data in the information field, for possible improvement of the transmission performance. The self synchronizing scrambler polynomial $X^{43} + 1$ and procedures defined in Recommendation I.432.1 shall be implemented.

NOTE – This Recommendation is written on the assumption that the cell payload will be descrambled by an ATU-R receiver.

7.2.3.4 Bit timing and ordering

When interfacing ATM data bytes to the AS0 or AS1 bearer channel, the most significant bit (MSB) shall be sent first. The AS0 or AS1 bearer channel data rates shall be integer multiples 32 kbit/s, with bit timing synchronous with the ADSL downstream modem timing base (see 7.4.2.1 and 7.4.2.2).

7.2.3.5 Cell Delineation

The cell delineation function permits the identification of cell boundaries in the payload. It uses the HEC field in the cell header.

Cell delineation shall be performed using a coding law checking the HEC field in the cell header according to the algorithm described in Recommendation I.432.1. The ATM cell delineation state machine is shown in Figure 7-3. The details of the state diagram are described below:

1) In the HUNT state, the delineation process is performed by checking bit-by-bit for the correct HEC. Once such an agreement is found, it is assumed that one header has been found, and the method enters the PRESYNC state. When byte boundaries are available within the receiving Physical Layer prior to cell delineation as with the framing modes 1, 2 and 3 (see 7.4), the cell delineation process may be performed byte-by-byte.

2) In the PRESYNC state, the delineation process is performed by checking cell-by-cell for the correct HEC. The process repeats until the correct HEC has been confirmed *DELTA* (see Note) times consecutively. If an incorrect HEC is found, the process returns to the HUNT state.

3) In the SYNC state, the cell delineation will be assumed to be lost if an incorrect HEC is obtained *ALPHA* times consecutively.

IPR2025-00395
Petitioners' Exhibit 1011
Page 36 of 256

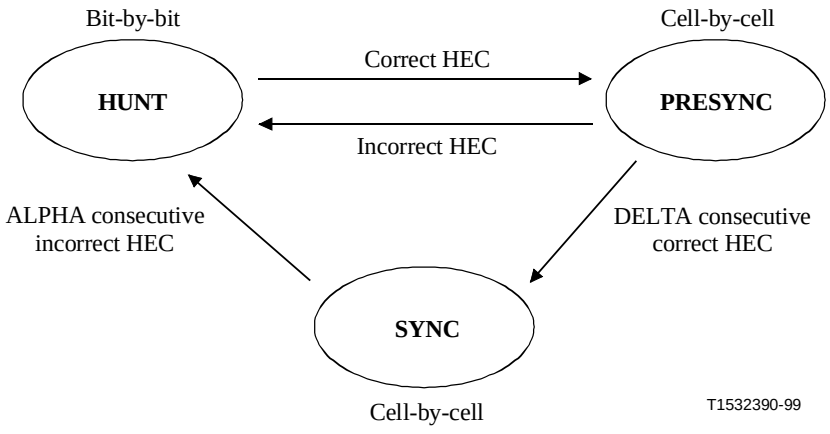

NOTE – With reference to Recommendation I.432.1, no recommendation is made for the values of ALPHA and DELTA as the choice of these values is not considered to effect interoperability. However, it should be noted that the use of the values suggested in Recommendation I.432 (ALPHA = 7, DELTA = 6) may be inappropriate due to the particular transmission characteristics of ADSL.

Figure 7-3/G.992.1 – ATM cell delineation state machine

7.2.3.6 Header Error Control Verification

The HEC covers the entire cell header. The code used for this function is capable of either:

- single bit error correction; or
- multiple bit error detection.

Error detection shall be implemented as defined in Recommendation I.432.1 with the exception that any HEC error shall be considered as a multiple bit error, and therefore, HEC error correction shall not be performed.

7.2.4 Framing Structure for ATM transport

An ATU-C configured for ATM transport shall support the full overhead framing structures 0 and 1 as specified in 7.4. The support of reduced overhead framing structures 2 and 3 is optional.

The ATU-C transmitter shall preserve V-C interface byte boundaries (explicitly present or implied by ATM cell boundaries) at the U-C interface, independent of the U-C interface framing structure.

To ensure framing structure 0 interoperability between an ATM ATU-C and an ATM cell TC plus an STM ATU-R (i.e. ATM over STM), the following shall apply:

- an STM ATU-R transporting ATM cells and not preserving T-R byte boundaries at the U-R interface shall indicate during initialization that frame structure 0 is the highest frame structure supported;
- an STM ATU-R transporting ATM cells and preserving T-R byte boundaries at the U-R interface shall indicate during initialization that frame structure 0, 1, 2 or 3 is the highest frame structure supported, as applicable to the implementation;
- an ATM ATU-C receiver operating in framing structure 0 cannot assume that the ATU-R transmitter will preserve T-R interface byte boundaries at the U-R interface and shall therefore perform the cell delineation bit-by-bit (see 7.2.3.5).

An ATU-C configured for ATM transport may support insertion of a Network Timing Reference (NTR). The network operator may choose not to insert the NTR. If inserted, the NTR shall be inserted in the U-C framing structure as described in 7.3.2.

IPR2025-00395
Petitioners' Exhibit 1011
Page 37 of 256

7.3 Network timing reference (NTR)

7.3.1 Need for NTR

Some services require that a reference clock be available in the higher layers of the protocol stack (i.e. above the physical layer); this is used to guarantee end-to-end synchronization of transmit and receive sides. Examples are Voice and Telephony Over ATM (VTOA) and Desktop Video Conferencing (DVC).

To support the distribution of a timing reference over the network, the ADSL system may transport an 8 kHz timing marker as NTR. This 8 kHz timing marker may be used for voice/video playback at the decoder (D/A converter) in DVC and VTOA applications. The 8 kHz timing marker is input to the ATU-C as part of the interface at the V-C reference point.

7.3.2 Transport of the NTR

The intention of the NTR transport mechanism is that the ATU-C should provide timing information at the U-C reference point to enable the ATU-R to deliver to the T-R reference point timing information that has a timing accuracy corresponding to the accuracy of the clock provided to the V-C reference point. If provided, the NTR shall be inserted in the U-C framing structure as follows:

- The ATU-C may generate an 8 kHz local timing reference (LTR) by dividing its sampling clock by the appropriate integer (276 if 2.208 MHz is used).
- It shall transmit the change in phase offset between the input NTR and LTR (measured in cycles of the 2.208 MHz clock, that is, units of approximately 452 ns) from the previous superframe to the present one; this shall be encoded into four bits ntr3-ntr0 (with ntr3 the MSB), representing a signed integer in the –8 to +7 range in 2's-complement notation. The bits ntr3-ntr0 shall be carried in the indicator bits 23 (ntr3) to 20 (ntr0); see Table 7-2.
- A positive value of the change of phase offset, $\Delta^2\phi$ shall indicate that the LTR is higher in frequency than the NTR.
- Alternatively, the ATU-C may choose to lock its downstream sampling clock (2.208 MHz) to 276 times the NTR frequency; in that case it shall encode $\Delta^2\phi$ to zero.

The NTR has a maximum frequency variation of ±32 ppm. The LTR, as specified in 7.11.1, has a maximum frequency variation of ±50 ppm. The maximum mismatch is therefore ±82 ppm. This would result in an average change of phase offset of approximately ±3.5 clock cycles over one 17 ms superframe, which can be mapped into 4 overhead bits.

One method that the ATU-C may use to measure this change of phase offset is shown in Figure 7-4.

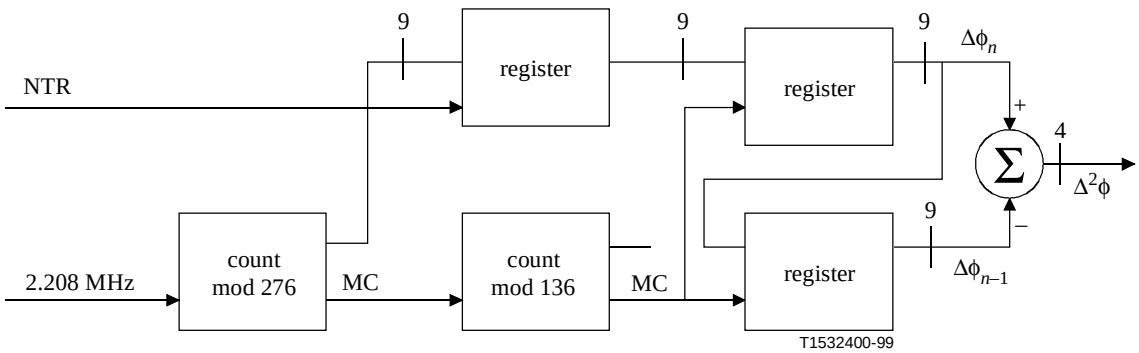

(MC is maxcount indication before foldover to 0)

Figure 7-4/G.992.1 – Example implementation of the $\Delta^2\phi$ measurement

IPR2025-00395
Petitioners' Exhibit 1011
Page 38 of 256

7.4 Framing

This subclause specifies framing of the downstream signal (ATU-C transmitter). The upstream framing (ATU-R transmitter) is specified in 8.4.

Two types of framing are defined: full overhead and reduced overhead. Furthermore, two versions of full overhead and two versions of reduced overhead are defined. The four resulting framing modes are defined in Table 7-1 and shall be referred to as framing modes 0, 1, 2 and 3.

Table 7-1/G.992.1 – Definition of framing modes

Framing structure	Description
0	Full overhead framing with asynchronous bit-to-modem timing (see 7.4.1) (i.e. enabled synchronization control mechanism, see 7.4.2)
1	Full overhead framing with synchronous bit-to-modem timing (see 7.4.1) (i.e. disabled synchronization control mechanism, see 7.4.2)
2	Reduced overhead framing with separate fast and sync byte in fast and interleaved latency buffer respectively (i.e. 64 kbit/s framing overhead) (see 7.4.3.1)
3	Reduced overhead framing with merged fast and sync byte, using either the fast or the interleaved latency buffer (i.e. 32 kbit/s framing overhead) (see 7.4.3.2)

Requirements for framing modes to be supported depend upon the ATU-C being configured for either STM or ATM transport, and are defined in 7.1.5 and 7.2.4 respectively.

The ATU-C shall indicate during initialization the highest framing structure number it supports. If the ATU-C indicates it supports framing structure k, it shall also support all framing structures $k – 1$ to 0. If the ATU-R indicates a lower framing structure number during initialization, the ATU-C shall fall back to the framing structure number indicated by the ATU-R.

As specified in clause 5, outside the ASx/LSx serial interfaces data bytes are transmitted MSB first in accordance with Recommendations G.703, G.709, I.361, and I.432.1. All serial processing in the ADSL frame (e.g. CRC, scrambling, etc.) shall, however, be performed LSB first, with the outside world MSB considered by the ADSL as LSB. As a result, the first incoming bit (outside world MSB) will be the first processed bit inside the ADSL (ADSL LSB).

7.4.1 Data symbols

Figures 5-1 and 5-2 show functional block diagrams of the ATU-C transmitter with reference points for data framing. Up to four downstream simplex data channels and up to three duplex data channels shall be synchronized to the 4 kHz ADSL DMT frame rate, and multiplexed into two separate data buffers (fast and interleaved). A cyclic redundancy check (CRC), scrambling, and forward error correction (FEC) coding shall be applied to the contents of each buffer separately, and the data from the interleaved buffer shall then be passed through an interleaving function. The two data streams shall then be tone ordered as defined in 7.7, and combined into a data symbol that is input to the constellation encoder. After constellation encoding, the data shall be modulated to produce an analogue signal for transmission across the customer loop.

A bit-level framing pattern shall not be inserted into the data symbols of the frame or superframe structure. DMT frame (i.e. symbol) boundaries are delineated by the cyclic prefix inserted by the modulator (see 7.12). Superframe boundaries are determined by the synchronization symbol, which shall also be inserted by the modulator, and which carries no user data (see 7.11.3).

IPR2025-00395
Petitioners' Exhibit 1011
Page 39 of 256

Because of the addition of FEC redundancy bytes and data interleaving, the data frames (i.e. bit-level data prior to constellation encoding) have different structural appearance at the three reference points through the transmitter. As shown in Figures 5-1 and 5-2, the reference points for which data framing will be described in the following subclauses are:

- A (Mux data frame): the multiplexed, synchronized data after the CRC has been inserted (synchronization is described in 7.4.2, CRC is specified in 7.4.1.5. Mux data frames shall be generated at a nominal 4 kbaud (i.e. every 250 µs).
- B (FEC output data frame): the data frame generated at the output of the FEC encoder at the DMT symbol rate, where an FEC block may span more than one DMT symbol period.
- C (constellation encoder input data frame): the data frame presented to the constellation coder.

7.4.1.1 Superframe structure

ADSL uses the superframe structure shown in Figure 7-5. Each superframe is composed of 68 data frames, numbered from 0 to 67, which are encoded and modulated into DMT symbols, followed by a synchronization symbol, which carries no user or overhead bit-level data and is inserted by the modulator (see 7.11.3) to establish superframe boundaries. From the bit-level and user data perspective, the DMT symbol rate is 4000 baud (period = 250 µs), but in order to allow for the insertion of the synchronization symbol the transmitted DMT symbol rate is 69/68 × 4000 baud.

Each data frame within the superframe contains data from the fast buffer and the interleaved buffer. The size of each buffer depends on the assignment of bearer channels made during initialization (see 7.4.1.2 and 10.6.2).

IPR2025-00395
Petitioners' Exhibit 1011
Page 40 of 256

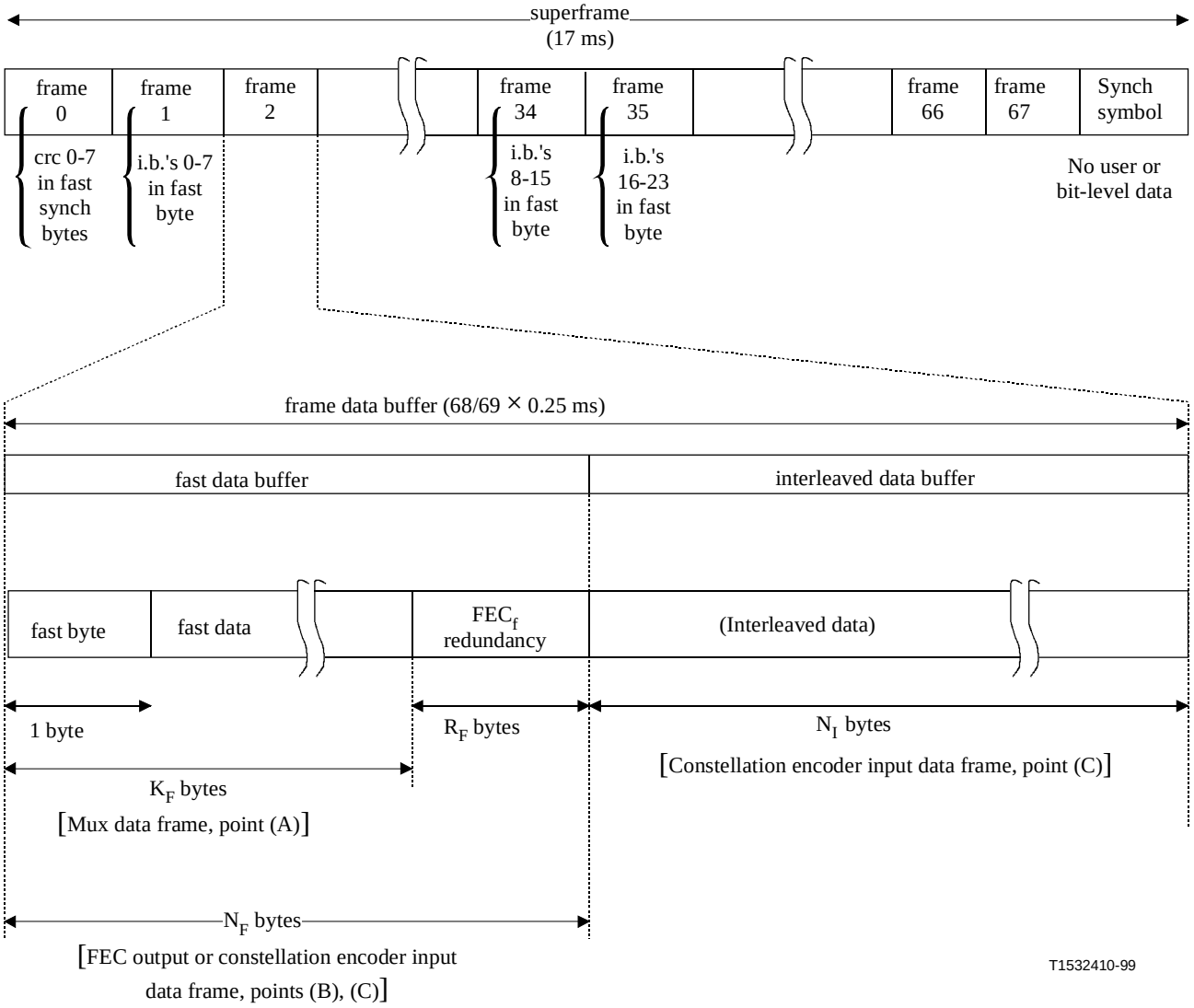

Figure 7-5/G.992.1 – ADSL superframe structure – ATU-C transmitter

During each ADSL superframe, eight bits shall be reserved for the CRC on the fast data buffer (crc0-crc7), and 24 indicator bits (ib0-ib23) shall be assigned for OAM functions. As shown in Figure 7-6, the synchronization byte of the fast data buffer ("fast byte") carries the CRC check bits in frame 0 and the indicator bits in frames 1, 34 and 35. The fast byte in other frames is assigned in even-/odd-frame pairs to either the EOC or to synchronization control of the bearer channels assigned to the fast buffer.

Bit 0 of the fast byte in an even-numbered frame (other than frames 0 and 34) and bit 0 of the fast byte of the odd-numbered frame immediately following shall be set to "0" to indicate these frames carry a synchronization control information.

When they are not required for synchronization control, CRC, or indicator bits, the fast bytes of two successive ADSL frames, beginning with an even-numbered frame, may contain indications of "no synchronization action" (see 7.4.2), or alternatively, they may be used to transmit one EOC message, consisting of 13 bits. The indicator bits are defined in Table 7-2.

Bit 0 of the fast byte in an even-numbered frame (other than frames 0 and 34) and bit 0 of the fast byte of the odd-numbered frame immediately following shall be set to "1" to indicate these frames carry a 13-bit EOC message plus one additional bit, r1 (see clause 9). The r1 bit is reserved for future use and shall be set to "1".

IPR2025-00395
Petitioners' Exhibit 1011
Page 41 of 256

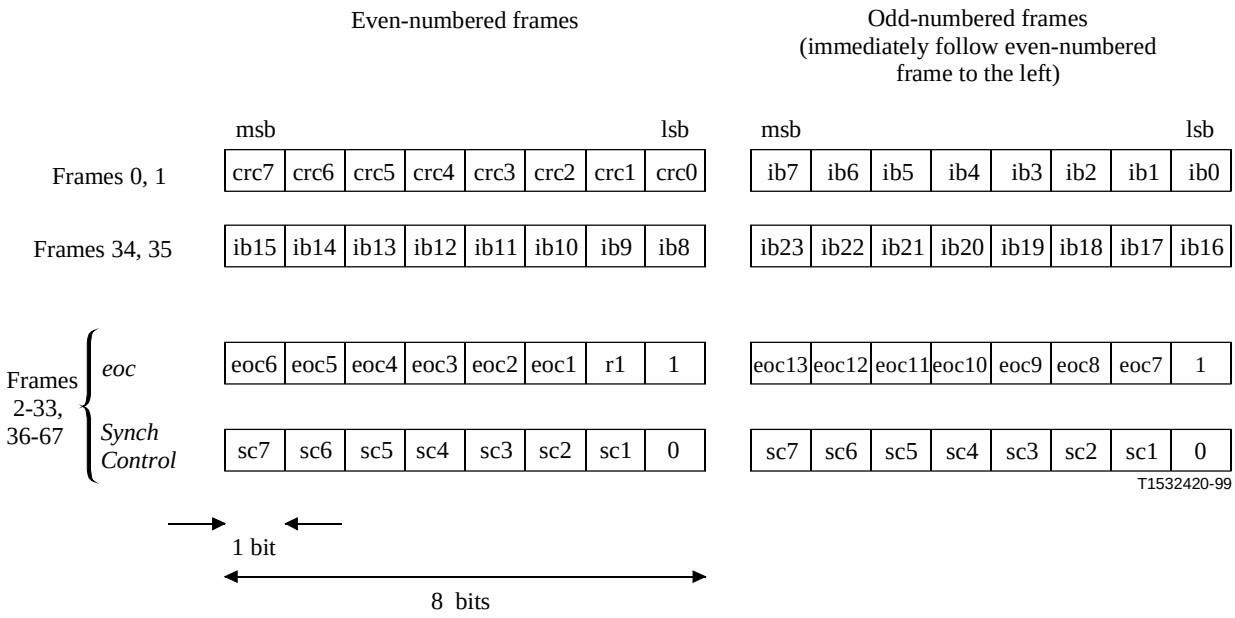

In all frames bit 7 = MSB and bit 0 = LSB.

Figure 7-6/G.992.1 – Fast synchronization byte ("fast byte") format – ATU-C transmitter

Table 7-2/G.992.1 – Definition of indicator bits, ATU-C transmitter (fast data buffer, downstream direction)

Indicator bit (Note 1)	Definition (Note 2)
Ib0-ib7	Reserved for future use
Ib8	FEBE-I
Ib9	FECC-I
Ib10	FEBE-F
Ib11	FECC-F
Ib12	LOS
Ib13	RDI
Ib14	NCD-I (used for ATM only, shall be set to "1" for STM)
Ib15	NCD-F (used for ATM only, shall be set to "1" for STM)
Ib16	HEC-I (used for ATM only, shall be set to "1" for STM)
Ib17	HEC-F (used for ATM only, shall be set to "1" for STM)
Ib18-19	Reserved for future use
Ib20-23	NTR0-3 (if NTR is not transported, ib20-23 shall be set to "1" – they are active low)
NOTE 1 – See 9.3.1 for the definition of the bits and their use. NOTE 2 – Because all indicator bits are defined as active low, reserved bits shall be set to "1".	

Eight bits per ADSL superframe shall be used for the CRC on the interleaved data buffer (crc0-crc7). As shown in Figures 7-7 and 7-9, the synchronization byte of the interleaved data buffer ("sync byte") carries the CRC check bits for the previous superframe in frame 0. In all other frames (1 through 67), the sync byte shall be used for synchronization control of the bearer channels assigned to the interleaved data buffer or used to carry an ADSL overhead control (AOC) channel. In the full overhead mode (see 7.4.1.2), when any bearer channel appears in the interleave buffer, then

IPR2025-00395
Petitioners' Exhibit 1011
Page 42 of 256

the AOC data shall be carried in the LEX byte, and the sync byte shall designate when the LEX byte contains AOC data and when it contains data bytes from the bearer channel. When no bearer channels are allocated to the interleave data buffer (i.e. all $B_i(ASx) = B_i(LSx) = 0$), then the sync byte shall carry the AOC data directly (AEX and LEX bytes, described in 7.4.1.2, do not exist in the interleaved buffer in this case). The format of the sync byte is described in 7.4.2.2.

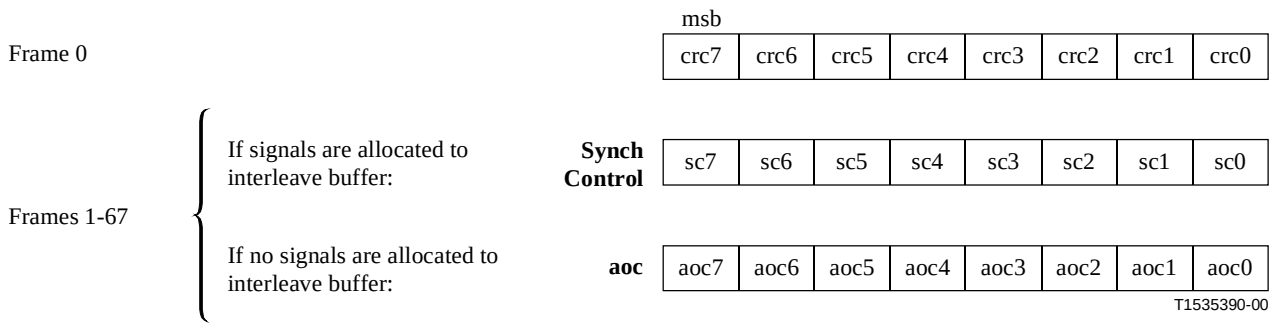

NOTE – The names "fast byte" and "sync byte" are abbreviations for, and are used interchangeably with, "fast synchronization byte" and "interleaved synchronization byte", respectively.

Figure 7-7/G.992.1 – Interleaved synchronization byte ("sync byte") format – ATU-C transmitter

7.4.1.2 Frame structure (with full overhead)

Each data frame shall be encoded into a DMT symbol, as described in 7.7 through 7.9. As is shown in Figure 7-5, each frame is composed of a fast data buffer and an interleaved data buffer, and the frame structure has a different appearance at each of the reference points (A, B and C). The bytes of the fast data buffer shall be clocked into the constellation encoder first, followed by the bytes of the interleaved data buffer. Bytes are clocked least significant bit first.

Each bearer channel shall be assigned to either the fast or the interleaved buffer during initialization (see 10.6.2), and a pair of bytes, $[B_F,B_I]$, transmitted for each bearer channel, where B_F and B_I designate the number of bytes allocated to the fast and interleaved buffers, respectively.

The seven $[B_F,B_I]$ pairs to specify the downstream bearer channel rates are:

- $B_F(ASx)$, $B_I(ASx)$ for X = 0, 1, 2 and 3, for the downstream simplex channels;
- $B_F(LSx)$, $B_I(LSx)$ for X = 0, 1 and 2, for the (downstream transport of the) duplex channels.

The rules for allocation are:

- for any bearer channel, X, except the 16 kbit/s C-channel option, either $B_F(X)$ = the number of bytes per frame of the fast buffer and $B_I(X) = 0$, or $B_F(X) = 0$ and $B_I(X)$ = the number of bytes per frame of the interleaved buffer;
- for the 16 kbit/s C-channel option, $B_F(LS0) = 255$ (11111111_2) and $B_I(LS0) = 0$, or $B_F(LS0) = 0$ and $B_I(LS0) = 255$.

7.4.1.2.1 Fast data buffer (with full overhead)

The frame structure of the fast data buffer shall be as shown in Figure 7-8 for reference points A and B, which are defined in Figures 5-1 and 5-2.

IPR2025-00395
Petitioners' Exhibit 1011
Page 43 of 256

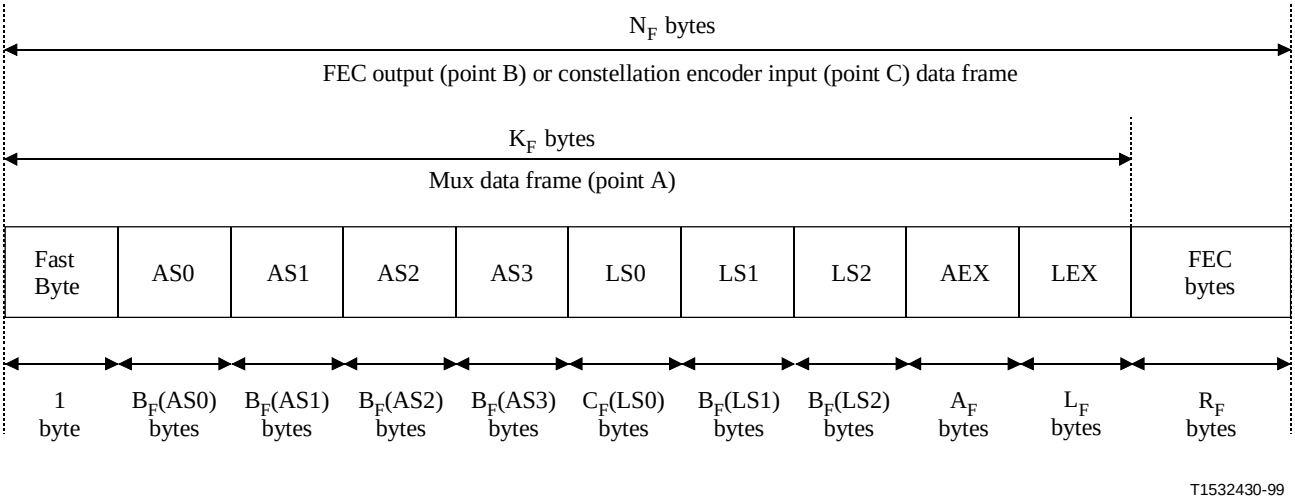

Figure 7-8/G.992.1 – Fast data buffer – ATU-C transmitter

The following shall hold for the parameters shown in Figure 7-8:

$$C_F(LS0) = 0 \quad \text{if } B_F(LS0) = 255(11111111_2) \tag{7-1}$$
$$= B_F(LS0) \quad \text{otherwise}$$

$$N_F = K_F + R_F \tag{7-2}$$

where R_F = number of FEC redundancy bytes, and

$$K_F = 1 + \sum_{i=0}^{3} B_F(ASi) + A_F + C_F(LS0) + \sum_{j=1}^{2} B_F(LSj) + L_F \tag{7-3}$$

where:

$$A_F = 0 \quad \text{if } \sum_{i=0}^{3} B_F(ASi) = 0$$
$$= 1 \quad \text{otherwise} \tag{7-4}$$

and:

$$L_F = 0 \quad \text{if } B_f(ASi) = 0 \text{ for } i = 0-3 \text{ and } B_f(LSj) = 0 \text{ for } j = 0-2$$
$$= 1 \quad \text{otherwise (including } B_F(LS0) = 255) \tag{7-5}$$

At reference point A (Mux data frame) in Figures 5-1 and 5-2, the fast buffer shall always contain at least the fast byte. This is followed by B_F(AS0) bytes of channel AS0, then B_F(AS1) bytes of channel AS1, B_F(AS2) bytes of channel AS2 and B_F(AS3) bytes of channel AS3. Next come the bytes for any duplex (LSx) channels allocated to the fast buffer. If any B_F(ASx) is non-zero, then both an AEX and an LEX byte follow the bytes of the last LSx channel, and if any B_F(LSx) is non-zero, the LEX byte shall be included.

When B_F(LS0) = 255, no bytes are included for the LS0 channel. Instead, the 16 kbit/s C-channel shall be transported in every other LEX byte on average, using the sync byte to denote when to add the LEX byte to the LS0 bearer channel.

R_F FEC redundancy bytes shall be added to the mux data frame (reference point A) to produce the FEC output data frame (reference point B), where R_F is given in the RATES1 options used during

IPR2025-00395
Petitioners' Exhibit 1011
Page 44 of 256

initialization.

Because the data from the fast buffer is not interleaved, the constellation encoder input data frame (reference point C) is identical to the FEC output data frame (reference point B).

7.4.1.2.2 Interleaved data buffer (with full overhead)

The frame structure of the interleaved data buffer is shown in Figure 7-9 for reference points A and B, which are defined in Figures 5-1 and 5-2.

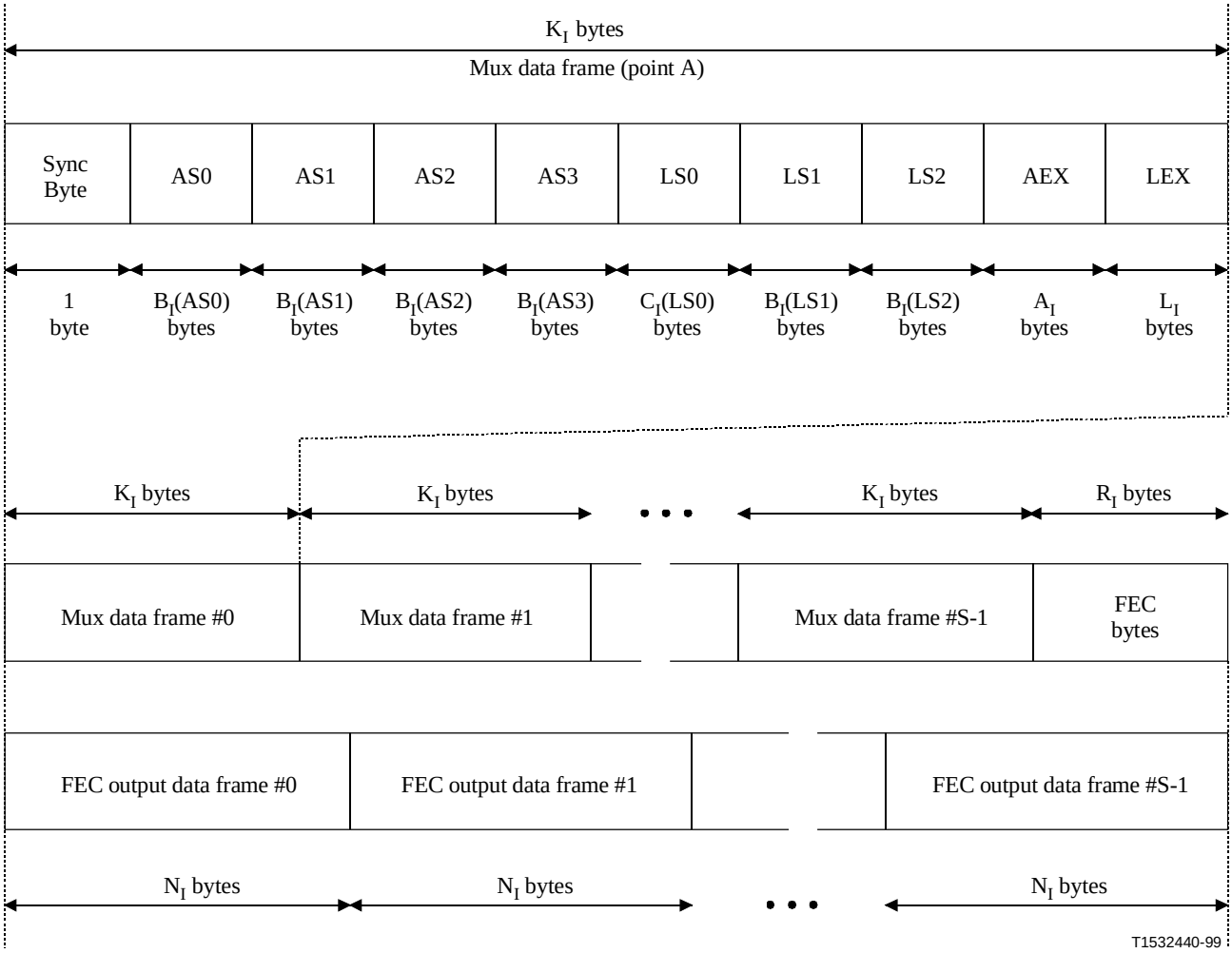

Figure 7-9/G.992.1 – Interleaved data buffer, ATU-C transmitter

The following shall hold for the parameters shown in Figure 7-9:

$$C_I(LS0) = 0 \quad \text{if } B_I(LS0) = 255(11111111_2) \tag{7-6}$$

$$= B_I(\text{LS0}) \quad \text{otherwise}$$

$$N_I = (S \times K_I + R_I)/\text{S} \tag{7-7}$$

where R_I = number of FEC redundancy bytes and S = number of DMT symbols per FEC codeword.

$$K_I = 1 + \sum_{i=0}^{3} B_I(ASi) + A_I + C_I(LS0) + \sum_{j=1}^{2} B_I(LSj) + L_I \tag{7-8}$$

IPR2025-00395
Petitioners' Exhibit 1011
Page 45 of 256

where:

$$A_I = 0 \qquad \text{if } \sum_{i=0}^{3} BI(ASi) = 0$$
$$= 1 \qquad \text{otherwise} \tag{7-9}$$

and:

$$L_I = 0 \quad \text{if } B_I(ASi) = 0 \text{ for } i = 0-3 \text{ and } B_I(LSj) = 0 \text{ for } j = 0-2$$
$$= 1 \quad \text{otherwise (including } B_I(LS0) = 255) \tag{7-10}$$

At reference point A, the Mux data frame, the interleaved data buffer shall always contain at least the sync byte. The rest of the buffer shall be built in the same manner as the fast buffer, substituting B_I in place of B_F. The length of each mux data frame is K_I bytes, as defined in Figure 7-9.

The FEC coder shall take in S mux data frames and append R_I FEC redundancy bytes to produce the FEC codeword of length $N_{FEC} = S \times K_I + R_I$ bytes. The FEC output data frames shall contain $N_I = N_{FEC}/S$ bytes, where N_I is an integer. When $S > 1$, then for the S frames in an FEC codeword, the FEC output Data Frame (reference point B) shall partially overlap two mux data frames for all except the last frame, which shall contain the R_I FEC redundancy bytes.

The FEC output data frames are interleaved to a specified interleave depth. The interleaving process (see 7.6.3) delays each byte of a given FEC output data frame a different amount, so that the constellation encoder input data frames will contain bytes from many different FEC data frames. At reference point A in the transmitter, mux data frame 0 of the interleaved data buffer is aligned with the ADSL superframe and mux data frame 0 of the fast data buffer (this is not true at reference point C). At the receiver, the interleaved data buffer will be delayed by ($S \times$ interleave depth $\times$ 250) µs with respect to the fast data buffer, and data frame 0 (containing the CRC bits for the interleaved data buffer) will appear a fixed number of frames after the beginning of the receiver superframe.

7.4.1.3 Hyperframe Structure (Annex C only)

For Annex C, see C.4.3.2.

7.4.1.4 Subframe Structure (Annex C only)

For Annex C, see C.4.3.3.

7.4.1.5 Cyclic redundancy check (CRC)

Two cyclic redundancy checks (CRCs) – one for the fast data buffer and one for the interleaved data buffer – shall be generated for each superframe and transmitted in the first frame of the following superframe. Eight bits per buffer type (fast or interleaved) per superframe are allocated to the CRC check bits (7.4.1.1). These bits are computed from the k message bits using the equation:

$$\text{crc(D)} = M(\text{D})\ \text{D}^8 \text{ modulo } G(\text{D}) \tag{7-11}$$

where:

$$M(\text{D}) = m_0\text{D}^{k-1} + m_1\text{D}^{k-2} + \ldots + m_{k-2}\text{D} + m_{k-1} \tag{7-12}$$

is the message polynomial,

$$G(\text{D}) = \text{D}^8 + \text{D}^4 + \text{D}^3 + \text{D}^2 + 1 \tag{7-13}$$

is the generating polynomial,

$$\text{crc(D)} = c_0\ \text{D}^7 + c_1\text{D}^6 + \ldots + c_6\ \text{D} + c_7 \tag{7-14}$$

IPR2025-00395
Petitioners' Exhibit 1011
Page 46 of 256

is the check polynomial, and D is the delay operator. That is, CRC is the remainder when $M(\mathrm{D})\ \mathrm{D}^8$ is divided by $G(\mathrm{D})$. The CRC check bits are transported in the synchronization bytes (fast and interleaved, 8 bits each) of frame 0 for each data buffer.

The bits (i.e. message polynomials) covered by the CRC include:

- fast data buffer:
  - frame 0: ASx bytes (X = 0, 1, 2, 3), LSx bytes (X = 0, 1, 2), followed by any AEX and LEX bytes;
  - all other frames: fast byte, followed by ASx bytes (X = 0, 1, 2, 3), LSx bytes (X = 0, 1, 2), and any AEX and LEX bytes.
- interleaved data buffer:
  - frame 0: ASx bytes (X = 0, 1, 2, 3), LSx bytes (X = 0, 1, 2), followed by any AEX and LEX bytes;
  - all other frames: sync byte, followed by ASx bytes (X = 0, 1, 2, 3), LSx bytes (X = 0, 1, 2), and any AEX and LEX bytes.

Each byte shall be clocked into the CRC least significant bit first.

The number of bits over which the CRC is computed varies with the allocation of bytes to the fast and interleaved data buffers (the numbers of bytes in ASx and LSx vary according to the $[B_F,B_I]$ pairs; AEX is present in a given buffer only if at least one ASx is allocated to that buffer; LEX is present in a given buffer only if at least one ASx or one LSx is allocated to that buffer).

Because of the flexibility in assignment of bearer channels to the fast and interleaved data buffers, CRC field lengths over an ADSL superframe will vary from approximately 67 bytes to approximately 14 875 bytes.

7.4.2 Synchronization

If the bit timing base of the input user data streams is not synchronous with the ADSL modem timing base, the input data streams shall be synchronized to the ADSL timing base using the synchronization control mechanism (consisting of synchronization control byte and the AEX and LEX bytes). Forward-error-correction coding shall always be applied to the synchronization control byte(s).

If the bit timing base of the input user data streams is synchronous with the ADSL modem timing base, then the synchronization control mechanism is not needed, and the synchronization control byte shall always indicate "no synchronization action" (see Tables 7-3 and 7-4).

7.4.2.1 Synchronization for the fast data buffer

Synchronization control for the fast data buffer may occur in frames 2 through 33, and 36 through 67 of an ADSL superframe as described in 7.4.1.1, where the fast byte may be used as the synchronization control byte. No synchronization action shall be taken for those frames for which the fast byte is used for CRC, fixed indicator bits, or EOC.

The format of the fast byte when used as synchronization control for the fast data buffer shall be as given in Table 7-3.

IPR2025-00395
Petitioners' Exhibit 1011
Page 47 of 256

Table 7-3/G.992.1 – Fast byte format for synchronization

Bits	Designation	Codes
sc7, sc6	ASx bearer channel designator	"00_2": AS0 "01_2": AS1 "10_2": AS2 "11_2": AS3
sc5, sc4	Synchronization control for the designated ASx bearer channel	"00_2": no synchronization action "01_2": add AEX byte to designated ASx bearer channel "11_2": add AEX and LEX bytes to ASx bearer channel "10_2": delete last byte from designated ASx bearer channel
sc3, sc2	LSx bearer channel designator	"00_2": LS0 "01_2": LS1 "10_2": LS2 "11_2": no synchronization action
sc1	Synchronization control for the designated LSx bearer channel	"1_2": add LEX byte to designated LSx bearer channel "0_2": delete last byte from designated LSx bearer channel
sc0	Synchronization/EOC designator	"0_2": perform synchronization control as indicated in sc7-sc1 "1_2": this byte is part of an EOC frame

ADSL deployments may need to interwork with DS1 (1.544 Mbit/s) or DS1C (3.152 Mbit/s) rates. The synchronization control option that allows adding up to two bytes to an ASx bearer channel provides sufficient overhead capacity to transport combinations of DS1 or DS1C channels transparently (without interpreting or stripping and regenerating the framing embedded within the DS1 or DS1C). The synchronization control algorithm shall, however, guarantee that the fast byte in some minimum number of frames is available to carry EOC frames, so that a minimum EOC rate (4 kbit/s) may be maintained.

When the data rate of the C-channel is 16 kbit/s, the LS0 bearer channel is transported in the LEX byte, using the "add LEX byte to designated LSx channel", with LS0 as the designated channel, every other frame on average.

If the bit timing base of the input bearer channels (ASx, LSx) is synchronous with the ADSL modem timing base then ADSL systems need not perform synchronization control by adding or deleting AEX or LEX bytes to/from the designated ASx and LSx channels, and the synchronization control byte shall indicate "no synchronization action" (i.e. sc7-0 coded "$XX0011X0_2$", with X discretionary).

7.4.2.2 Synchronization for the interleaved data buffer

Synchronization control for the interleaved data buffer can occur in frames 1 through 67 of an ADSL superframe as described in 7.4.1.1, where the sync byte may be used as the synchronization control byte. No synchronization action shall be taken during frame 0, where the sync byte is used for CRC during frames when the LEX byte carries the AOC.

The format of the sync byte when used as synchronization control for the interleaved data buffer shall be as given in Table 7-4. In the case where no signals are allocated to the interleaved data buffer, the sync byte shall carry the AOC data directly, as shown in Figure 7-7 in 7.4.1.1.

IPR2025-00395
Petitioners' Exhibit 1011
Page 48 of 256

Table 7-4/G.992.1 – Sync byte format for synchronization

Bits	Designation	Codes
sc7, sc6	ASx bearer channel designator	"00_2": AS0 "01_2": AS1 "10_2": AS2 "11_2": AS3
sc5, sc4	Synchronization control for the designated ASx bearer channel	"00_2": no synchronization action "01_2": add AEX byte to designated ASx bearer channel "11_2": add AEX and LEX bytes to ASx bearer channel "10_2": delete last byte from designated ASx bearer channel
sc3, sc2	LSx bearer channel designator	"00_2": LS0 "01_2": LS1 "10_2": LS2 "11_2": no synchronization action
sc1	Synchronization control for the designated LSx bearer channel	"1_2": add LEX byte to designated LSx bearer channel "0_2": delete last byte from designated LSx bearer channel
sc0	Synchronization/AOC designator	"0_2": perform synchronization control as indicated in sc7-sc1 "1_2": LEX byte carries ADSL overhead control channel data; synchronization control is allowed for "add AEX" or "delete" as indicated in sc7-sc1

ADSL deployments may need to interwork with DS1 (1.544 Mbit/s) or DS1C (3.152 Mbit/s) rates. The synchronization control option that allows adding up to two bytes to an ASx bearer channel provides sufficient overhead capacity to transport combinations of DS1 or DS1C channels transparently (without interpreting or stripping and regenerating the framing embedded within the DS1 or DS1C).

When the data rate of the C-channel is 16 kbit/s, the LS0 bearer channel is transported in the LEX byte, using the "add LEX byte to designated LSx channel", with LS0 as the designated channel, every other frame on average.

If the bit timing base of the input bearer channels (ASx, LSx) is synchronous with the ADSL modem timing base then ADSL systems need not perform synchronization control by adding or deleting AEX or LEX bytes to/from the designated ASx and LSx channels, and the synchronization control byte shall indicate "no synchronization action". In this case, and when framing mode 1 is used, the sc7-0 shall always be coded "$XX0011XX_2$", with X discretionary. When sc0 is set to 1, the LEX byte shall carry AOC. When sc0 is set to 0, the LEX byte shall be coded 00_{16}. The sc0 may be set to 0 only in between transmissions of 5 concatenated and identical AOC messages.

7.4.3 Reduced overhead framing

The format described in 7.4.1.2 for full overhead framing includes overhead to allow for the synchronization of seven ASx and LSx bearer channels. When the synchronization function described in 7.4.2 is not required, the ADSL equipment may operate in a reduced overhead mode. This mode retains all the full overhead mode functions except synchronization control. When using the reduced overhead framing, the framing structure shall be as defined in 7.4.3.1 or 7.4.3.2.

IPR2025-00395
Petitioners' Exhibit 1011
Page 49 of 256

7.4.3.1 Reduced overhead framing with separate fast and sync bytes

The AEX and LEX bytes shall be eliminated from the ADSL frame format, and both the fast and sync bytes shall carry overhead information as described in 7.4.1.2. The fast byte carries the fast buffer CRC, indicator bits, and EOC messages, and the sync byte carries the interleave buffer CRC and AOC messages. The assignment of overhead functions to fast and sync bytes when using the full overhead framing and when using the reduced overhead framing with separate fast and sync bytes shall be as shown in Table 7-5.

In the reduced overhead framing with separate fast and sync bytes, the structure of the fast data buffer shall be as shown in 7.4.1.2.1 with A_F and L_F set to "0". The structure of the interleaved data buffer shall be as shown in 7.4.1.2.2 with A_I and L_I set to "0".

Table 7-5/G.992.1 – Overhead functions for framing modes

Frame Number	Full Overhead Mode		Reduced Overhead Mode	
	Fast Sync	**Interleave Sync**	**Fast Sync**	**Interleave Sync**
0	fast CRC	interleaved CRC	fast CRC	interleaved CRC
1	IB0-7	sync or AOC	IB0-7	AOC
34	IB8-15	sync or AOC	IB8-15	AOC
35	IB16-23	sync or AOC	IB16-23	AOC
all other frames	sync or EOC	sync or AOC	sync or EOC (Note)	AOC
NOTE – In the reduced overhead mode, only "no synchronization action" code shall be used.				

7.4.3.2 Reduced overhead framing with merged fast and sync bytes

In the single latency mode, data is assigned to only one data buffer (fast or interleaved). If data is assigned to only the fast buffer, then only the fast byte shall be used to carry overhead information. If data is assigned to only the interleave buffer, then only the sync byte shall be used to carry overhead information. Reduced overhead framing with merged fast and sync bytes shall not be used when operating in dual latency mode.

For ADSL systems transporting data using a single data buffer (fast or interleaved), the CRC, indicator, EOC and AOC function shall be carried in a single overhead byte assigned to separate data frames within the superframe structure. The CRC remains in frame 0 and the indicator bits in frames 1, 34 and 35. The AOC and EOC bytes are assigned to alternate pairs of frames. For ADSL equipment operating in single latency mode using the reduced overhead framing with merged fast and sync bytes, the assignment of overhead functions shall be as shown in Table 7-6.

In the single latency mode using the reduced overhead framing with merged fast and sync bytes, only one data buffer shall be used. If the fast data buffer is used, the structure of the fast data buffer shall be as shown in 7.4.1.2.1 (with A_F and L_F set to "0") and the interleaved data buffer shall be empty (no sync byte and $K_I = 0$). If the interleaved data buffer is used, the structure of the interleaved data buffer shall be as shown in 7.4.1.2.2 (with A_I and L_I set to "0") and the fast data buffer shall be empty (no fast byte and $K_F = 0$).

IPR2025-00395
Petitioners' Exhibit 1011
Page 50 of 256

Table 7-6/G.992.1 – Overhead functions for reduced overhead mode – with merged fast and sync bytes

Frame Number	(Fast Buffer Only) Fast Byte format	(Interleaved Buffer Only) Sync Byte format
0	Fast CRC	Interleaved CRC
1	IB0-7	IB0-7
34	IB8-15	IB8-15
35	IB16-23	IB16-23
4n+2, 4n+3 with n = 0...16, n ≠ 8	EOC or sync (Note)	EOC or sync (Note)
4n, 4n+1 with n = 0...16, n ≠ 0	AOC	AOC
NOTE – In the reduced overhead mode, only the "no synchronization action" code shall be used.		

7.5 Scramblers

The binary data streams output (LSB of each byte first) from the fast and interleaved data buffers shall be scrambled separately using the following algorithm for both:

$$d'_n = d_n \oplus d'_{n-18} \oplus d'_{n-23} \tag{7-15}$$

where d_n is the n-th output from the fast or interleaved buffer (i.e. input to the scrambler), and d'_n is the n-th output from the corresponding scrambler. This is illustrated in Figure 7-10.

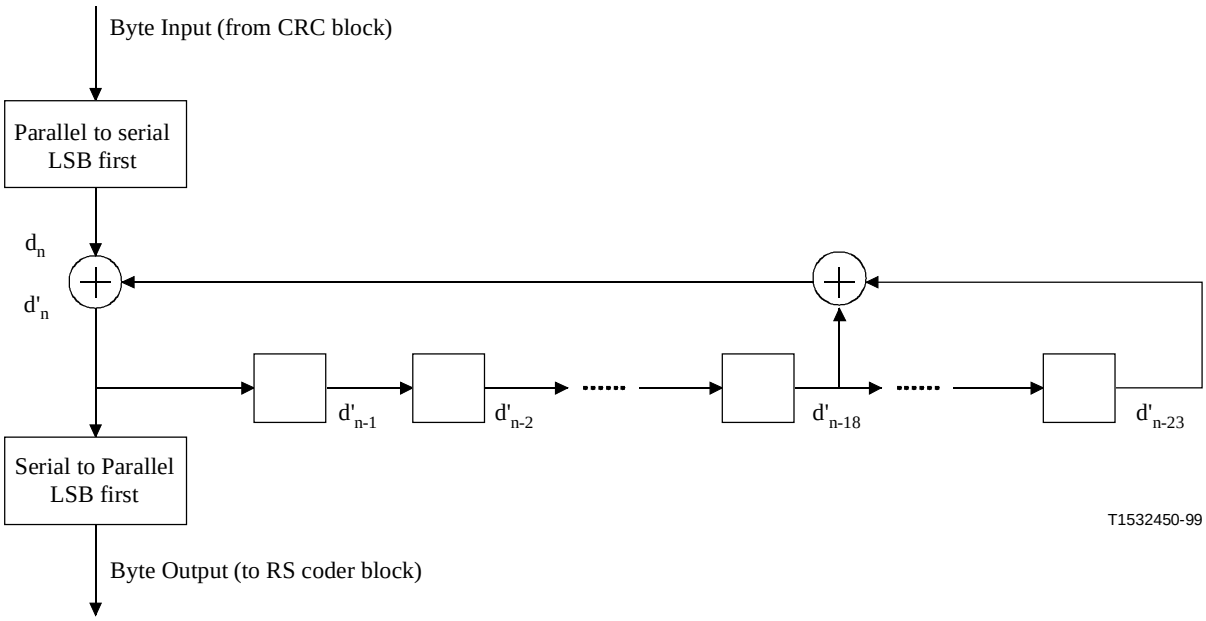

Figure 7-10/G.992.1 – Scrambler

These scramblers are applied to the serial data streams without reference to any framing or symbol synchronization. Descrambling in receivers can likewise be performed independent of symbol synchronization.

IPR2025-00395
Petitioners' Exhibit 1011
Page 51 of 256

7.6 Forward error correction

The ATU-C shall support downstream transmission with at least any combination of the FEC coding capabilities shown in Table 7-7.

Table 7-7/G.992.1 – Minimum FEC coding capabilities for ATU-C

Parameter	Fast buffer	Interleaved buffer
Parity bytes per R-S codeword	R_F = 0, 2, 4, 6, 8, 10, 12, 14, 16 (Note 1)	R_I = 0, 2, 4, 6, 8, 10, 12, 14, 16 (Notes 1 and 2)
DMT symbols per R-S codeword	S = 1	S = 1, 2, 4, 8, 16
Interleave depth	Not applicable	D = 1, 2, 4, 8, 16, 32, 64
NOTE 1 – R_F can be > 0 only if K_F > 0, and R_I can be > 0 only if K_I > 0. NOTE 2 – R_I shall be an integer multiple of S.		

The ATU-C shall also support upstream transmission with at least any combination of the FEC coding capabilities shown in Table 8-3.

7.6.1 Reed-Solomon coding

R (i.e. R_F or R_I) redundant check bytes c_0 , c_1, ..., c_{R-2}, c_{R-1} shall be appended to K (i.e. K_F or $S \times K_I$) message bytes m_0, m_1, ..., m_{K-2}, m_{K-1} to form a Reed-Solomon codeword of size $N = K + R$ bytes. The check bytes are computed from the message byte using the equation:

$$C(\mathrm{D}) = M(\mathrm{D})\ \mathrm{D}^{\mathrm{R}} \text{ modulo } G(\mathrm{D}) \tag{7-16}$$

where:

$$M(\mathrm{D}) = m_0\ \mathrm{D}^{\mathrm{K}-1} + m_1\ \mathrm{D}^{\mathrm{K}-2} + \ldots + m_{\mathrm{K}-2}\ \mathrm{D} + m_{\mathrm{K}-1} \tag{7-17}$$

is the message polynomial,

$$C(\mathrm{D}) = c_0\ \mathrm{D}^{\mathrm{R}-1} + c_1\ \mathrm{D}^{\mathrm{R}-2} + \ldots + c_{\mathrm{R}-2}\ \mathrm{D} + c_{\mathrm{R}-1} \tag{7-18}$$

is the check polynomial, and

$$G(D) = \prod_{i=0}^{R-1} \left(D + \alpha^{\mathrm{i}}\right) \tag{7-19}$$

is the generator polynomial of the Reed-Solomon code, where the index of the product runs from $i = 0$ to R–1. That is, C(D) is the remainder obtained from dividing M(D) D^{R} by G(D). The arithmetic is performed in the Galois Field GF(256), where α is a primitive element that satisfies the primitive binary polynomial $x^8 + x^4 + x^3 + x^2 + 1$. A data byte (d_7, d_6, ..., d_1, d_0) is identified with the Galois Field element $d_7\alpha^7 + d_6\alpha^6 \ \ldots + d_1\alpha + d_0$

The number of check bytes R, and the codeword size N vary, as explained in 7.4.

7.6.2 Reed-Solomon Forward Error Correction Superframe Synchronization

When entering the SHOWTIME state after completion of Initialization and Fast Retrain, the ATU shall align the first byte of the first Reed-Solomon codeword with the first data byte of DF 0.

7.6.3 Interleaving

The Reed-Solomon codewords in the interleave buffer shall be convolutionally interleaved. The interleaving depth varies, as explained in 7.4, but shall always be a power of 2. Convolutional

IPR2025-00395
Petitioners' Exhibit 1011
Page 52 of 256

interleaving is defined by the rule:

Each of the N bytes B_0, B_1, ..., B_{N-1} in a Reed-Solomon codeword is delayed by an amount that varies linearly with the byte index. More precisely, byte D_i (with index i) is delayed by (D–1) × i bytes, where D is the interleave depth.

An example for N = 5, D = 2 is shown in Table 7-8, where Bj_i denotes the i-th byte of the j-th codeword.

Table 7-8/G.992.1 – Convolutional interleaving example for N = 5, D = 2

Interleaver input	Bj_0	Bj_1	Bj_2	Bj_3	Bj_4	$Bj+1_0$	$Bj+1_1$	$Bj+1_2$	$Bj+1_3$	$Bj+1_4$
Interleaver output	Bj_0	$Bj-1_3$	Bj_1	$Bj-1_4$	Bj_2	$Bj+1_0$	Bj_3	$Bj+1_1$	Bj_4	$Bj+1_2$

With the above-defined rule, and the chosen interleaving depths (powers of 2), the output bytes from the interleaver always occupy distinct time slots when N is odd. When N is even, a dummy byte shall be added at the beginning of the codeword at the input to the interleaver. The resultant odd-length codeword is then convolutionally interleaved, and the dummy byte shall then be removed from the output of the interleaver.

7.6.4 Support of higher downstream bit rates with S = 1/2 (optional)

With a rate of 4000 data frames per second and a maximum of 255 bytes (maximum RS codeword size) per data frame, the ADSL downstream line rate is limited to approximately 8 Mbit/s per latency path. The line rate limit can be increased to about 16 Mbit/s for the interleaved path by mapping two RS codewords into one FEC data frame (i.e. by using S = 1/2 in the interleaved path). S = 1/2 shall be used in the downstream direction only over bearer channel AS0. Support of S = 1/2 is optional.

When the K_I data bytes per interleaved mux data frame cannot be packed into one RS codeword, i.e. K_I is such that $K_I + R > 255$, the K_I data bytes shall be split into two consecutive RS codewords. When K_I is even, the first and second codeword have the same length $N_I1 = N_I2 = (K_I/2 + R_I)$, otherwise the first codeword is one byte longer than the second, i.e. first codeword has $N_I1 = (K_I + 1)/2 + R_I$ bytes, the second codeword has $N_I2 = (K_I - 1)/2 + R_I$ bytes. For the FEC output data frame, $N_I = N_I1 + N_I2$, with $N_I < 511$ bytes.

The convolutional interleaver requires all codewords to have the same odd length. To achieve the odd codeword length, insertion of a dummy (not transmitted) byte may be required. For S = 1/2, the dummy byte addition to the first and/or second codeword at the input of the interleaver shall be as in Table 7-9.

Table 7-9/G.992.1 –Dummy byte insertion at interleaver input for S = 1/2

N_Id1	N_Id2	Dummy Byte Insertion Action
Odd	Odd	No action
Even	Even	Add one dummy byte at the beginning of both codewords
Odd	Even	Add one dummy byte at the beginning of the second codeword
Even	Odd	Add one dummy byte at the beginning of the first codeword and two dummy bytes at the beginning of the second codeword [the de-interleaver shall insert one dummy byte into the de-interleaver matrix on the first byte and the (D + 1)th byte of the corresponding codeword to make the addressing work properly]

IPR2025-00395
Petitioners' Exhibit 1011
Page 53 of 256

7.7 Tone ordering

A DMT time-domain signal has a high peak-to-average ratio (its amplitude distribution is almost Gaussian), and large values may be clipped by the digital-to-analogue converter. The error signal caused by clipping can be considered as an additive negative impulse for the time sample that was clipped. The clipping error power is almost equally distributed across all tones in the symbol in which clipping occurs. Clipping is therefore most likely to cause errors on those tones that, in anticipation of a higher received SNR, have been assigned the largest number of bits (and therefore have the densest constellations). These occasional errors can be reliably corrected by the FEC coding if the tones with the largest number of bits have been assigned to the interleave buffer.

The numbers of bits and the relative gains to be used for every tone shall be calculated in the ATU-R receiver, and sent back to the ATU-C according to a defined protocol (see 10.9.14). The pairs of numbers are typically stored, in ascending order of frequency or tone number *i*, in a bit and gain table.

The "tone-ordered" encoding shall first assign the $8 \times N_F$ bits from the fast data buffer (see 7.4) to the tones with the smallest number of bits assigned to them, and then the $8 \times N_I$ bits from the interleave data buffer to the remaining tones.

All tones shall be encoded with the number of bits assigned to them; one tone may therefore have a mixture of bits from the fast and interleaved buffers.

The ordered bit table b'_i shall be based on the original bit table b_i as follows:

For $k = 0$ to 15 {

From the bit table, find the set of all i with the number of bits per tone $b_i = k$

Assign b_i to the ordered bit allocation table in ascending order of i

}

A complementary de-ordering procedure should be performed in the ATU-R receiver. It is not necessary, however, to send the results of the ordering process to the receiver because the bit table was originally generated in the ATU-R, and therefore that table has all the information necessary to perform the de-ordering.

Figures 7-11 and 7-12 show an example of tone ordering and bit extraction (without and with trellis coding respectively) for a 6-tone DMT case, with $N_F = 1$ and $N_I = 1$ for simplicity.

IPR2025-00395
Petitioners' Exhibit 1011
Page 54 of 256

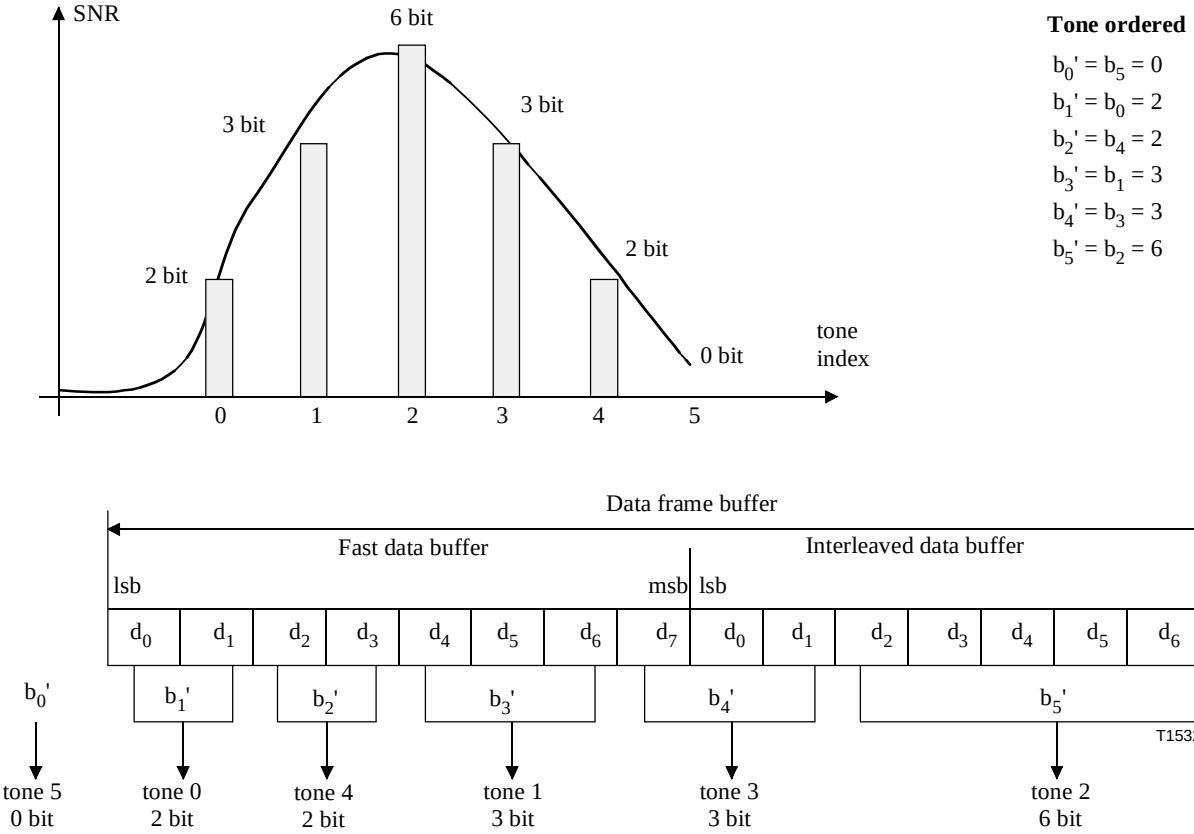

Figure 7-11/G.992.1 – Tone ordering and bit extraction example (without trellis coding)

IPR2025-00395
Petitioners' Exhibit 1011
Page 55 of 256

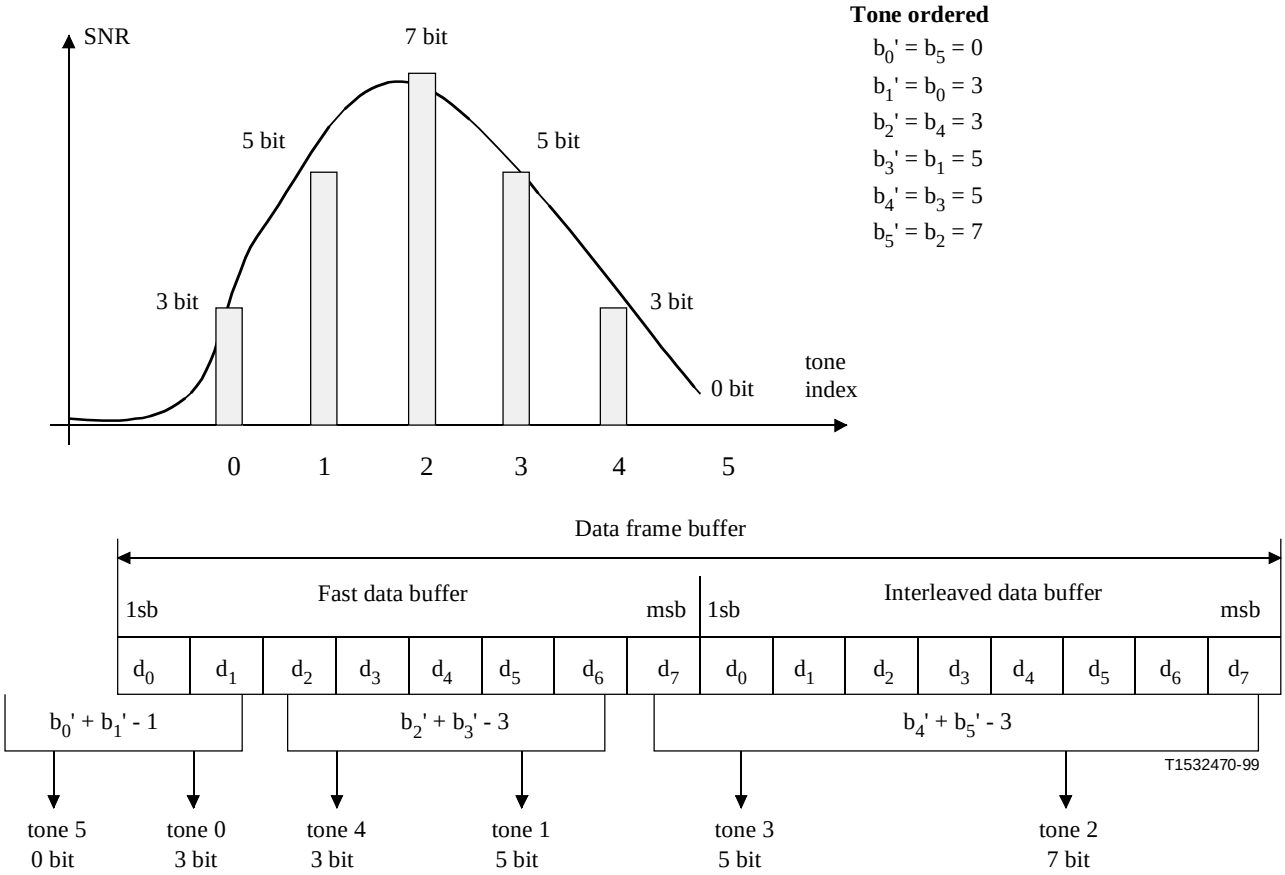

Figure 7-12/G.992.1 – Tone ordering and bit extraction example (with trellis coding)

7.8 Constellation encoder (trellis code version)

Block processing of Wei's 16-state 4-dimensional trellis code is optional to improve system performance. An algorithmic constellation encoder shall be used to construct constellations with a maximum number of bits equal to N_{downmax}, where $8 \le N_{\text{downmax}} \le 15$.

7.8.1 Bit extraction

Data bytes from the data frame buffer shall be extracted according to a reordered bit allocation table b'_i, least significant bit first. Because of the 4-dimensional nature of the code, the extraction is based on pairs of consecutive b'_i, rather than on individual ones, as in the non-trellis-coded case. Furthermore, due to the constellation expansion associated with coding, the bit allocation table, b'_i, specifies the number of coded bits per tone, which can be any integer from 2 to 15. Given a pair (x, y) of consecutive b'_i, $x + y - 1$ bits (reflecting a constellation expansion of 1 bit per 4 dimensions, or one half bit per tone) are extracted from the data frame buffer. These $z = x + y - 1$ bits $(t_z, t_{z-1}, ..., t_1)$ are used to form the binary word u as shown in Table 7-10. The tone ordering procedure ensures $x \le y$. Single-bit constellations are not allowed because they can be replaced by 2-bit constellations with the same average energy. Refer to 7.8.2 for the reason behind the special form of the word u for the case $x = 0$, $y > 1$.

IPR2025-00395
Petitioners' Exhibit 1011
Page 56 of 256

Table 7-10/G.992.1 – Forming the binary word *u*

Condition	Binary word/comment
$x > 1, y > 1$	$u = (t_z, t_{z-1}, ..., t_1)$
$x = 1, y \geq 1$	Condition not allowed
$x = 0, y > 1$	$u = (t_z, t_{z-1}, ..., t_2, 0, t_1, 0)$
$x = 0, y = 0$	Bit extraction not necessary, no message bits being sent
$x = 0, y = 1$	Condition not allowed
NOTE – t_1 is the first bit extracted from the data frame buffer.	

The last two 4-dimensional symbols in the DMT symbol shall be chosen to force the convolutional encoder state to the zero state. For each of these symbols, the 2 LSBs of u are predetermined, and only $(x + y - 3)$ bits shall be extracted from the data frame buffer and shall be allocated to $t_3, t_4, ..., t_z$.

7.8.2 Bit conversion

The binary word $u = (u_{z'}, u_{z'-1}, ..., u_1)$ determines two binary words $v = (v_{z'-y}, ..., v_0)$ and $w = (w_{y-1}, ..., w_0)$, which are used to look up two constellation points in the encoder constellation table. For the usual case of $x > 1$ and $y > 1$, $z' = z = x + y - 1$, and v and w contain x and y bits respectively. For the special case of $x = 0$ and $y > 1$, $z' = z + 2 = y + 1$, $v = (v_1, v_0) = 0$ and $w = (w_{y-1}, ..., w_0)$. The bits (u_3, u_2, u_1) determine (v_1, v_0) and (w_1, w_0) according to Figure 7-13.

The convolutional encoder shown in Figure 7-13 is a systematic encoder (i.e. u_1 and u_2 are passed through unchanged) as shown in Figure 7-14. The convolutional encoder state (S_3, S_2, S_1, S_0) is used to label the states of the trellis shown in Figure 7-16. At the beginning of a DMT symbol period, the convolutional encoder state is initialized to (0, 0, 0, 0).

The remaining bits of v and w are obtained from the less significant and more significant parts of $(u_{z'}, u_{z'-1}, ..., u_4)$, respectively. When $x > 1$ and $y > 1$, $v = (u_{z'-y+2}, u_{z'-y+1}, ..., u_4, v_1, v_0)$ and $w = (u_{z'}, u_{z'-1}, ..., u_{z'-y+3}, w_1, w_0)$. When $x = 0$, the bit extraction and conversion algorithms have been judiciously designed so that $v_1 = v_0 = 0$. The binary word v is input first to the constellation encoder, and then the binary word w.

In order to force the final state to the zero state (0, 0, 0, 0), the 2 LSBs u_1 and u_2 of the final two 4-dimensional symbols in the DMT symbol are constrained to $u_1 = S_1 \oplus S_3$, and $u_2 = S_2$.

7.8.3 Coset partition and trellis diagram

In a trellis code modulation system, the expanded constellation is labelled and partitioned into subsets ("cosets") using a technique called mapping by set-partitioning. The 4-dimensional cosets in Wei's code can each be written as the union of two Cartesian products of two 2-dimensional cosets. For example, $C_4^0 = (C_2^0 \times C_2^1) \cup (C_2^2 \times C_2^3)$. The four constituent 2-dimensional cosets, denoted by $C_2^0, C_2^1, C_2^2, C_2^3$, are shown in Figure 7-15.

The encoding algorithm ensures that the two least significant bits of a constellation point comprise the index i of the 2-dimensional coset C_2^i in which the constellation point lies. The bits (v_1, v_0) and (w_1, w_0) are in fact the binary representations of this index.

The three bits (u_2, u_1, u_0) are used to select one of the eight possible 4-dimensional cosets. The eight cosets are labelled C_4^i where i is the integer with binary representation (u_2, u_1, u_0). The additional bit u_3 (see Figure 7-13) determines which one of the two Cartesian products of 2-dimensional cosets in

IPR2025-00395
Petitioners' Exhibit 1011
Page 57 of 256

the 4-dimensional coset is chosen. The relationship is shown in Table 7-11. The bits (v_1, v_0) and (w_1, w_0) are computed from (u_3, u_2, u_1, u_0) using the linear equations given in Figure 7-13.

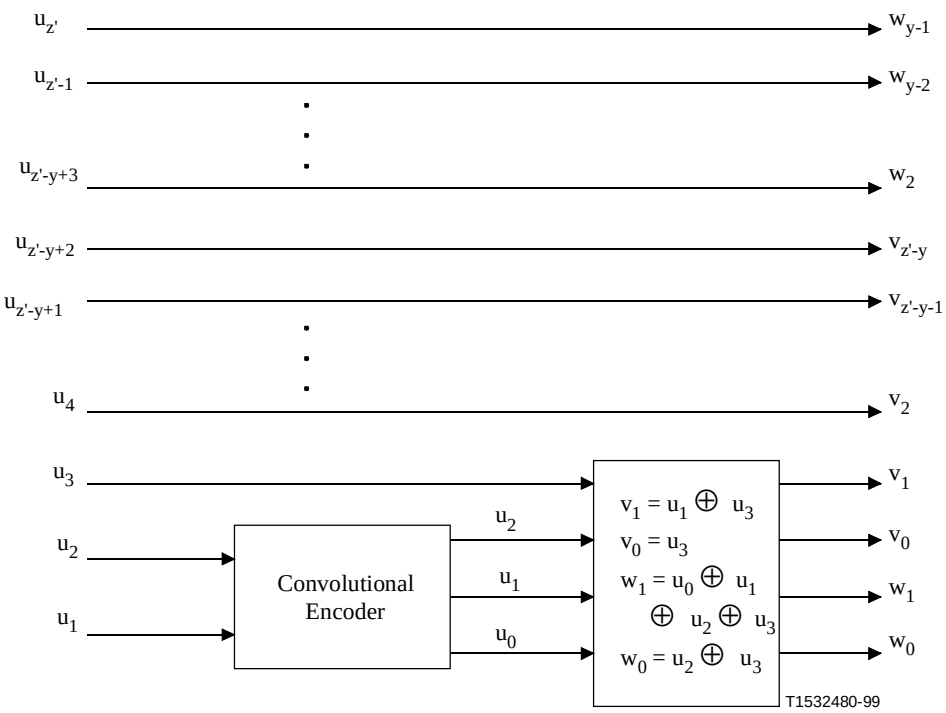

Figure 7-13/G.992.1 – Conversion of *u* to *v* and *w*

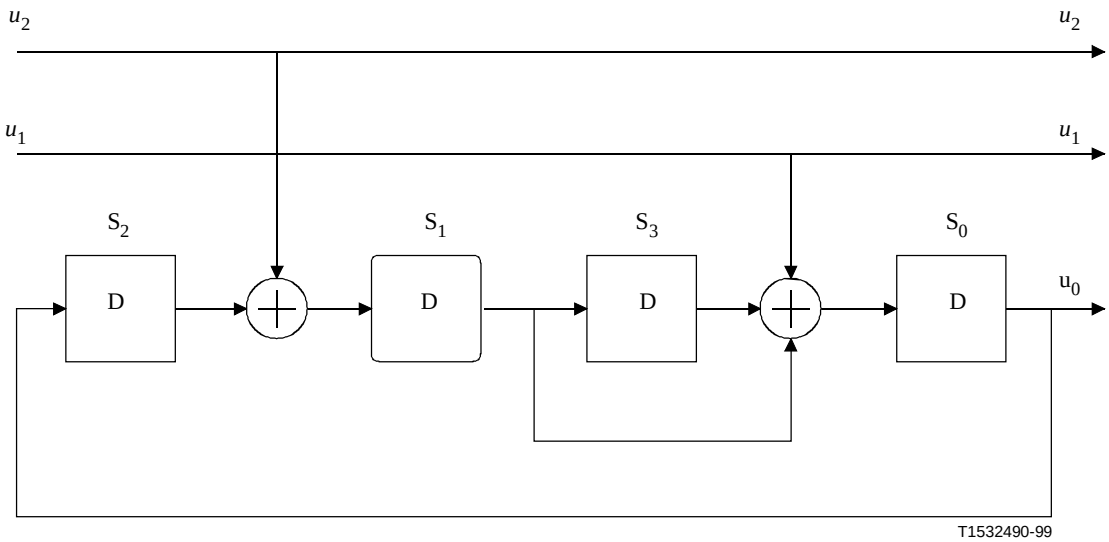

Figure 7-14/G.992.1 – Finite state machine for Wei's encoder

IPR2025-00395
Petitioners' Exhibit 1011
Page 58 of 256

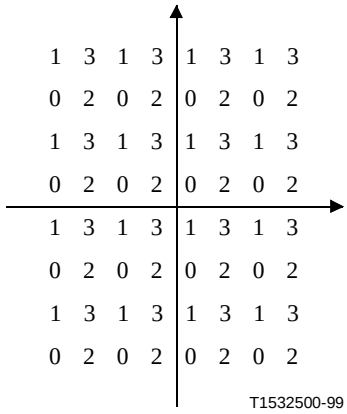

Figure 7-15/G.992.1 – Convolutional encoder

Table 7-11/G.992.1 – Relation between 4-dimensional and 2-dimensional cosets

4-D coset	u_3	u_2	u_1	u_0	v_1	v_0	w_1	w_0	2-D cosets
C_4^0	0	0	0	0	0	0	0	0	$C_2^0 \times C_2^0$
	1	0	0	0	1	1	1	1	$C_2^3 \times C_2^3$
C_4^4	0	1	0	0	0	0	1	1	$C_2^0 \times C_2^3$
	1	1	0	0	1	1	0	0	$C_2^3 \times C_2^0$
C_4^2	0	0	1	0	1	0	1	0	$C_2^2 \times C_2^2$
	1	0	1	0	0	1	0	1	$C_2^1 \times C_2^1$
C_4^6	0	1	1	0	1	0	0	1	$C_2^2 \times C_2^1$
	1	1	1	0	0	1	1	0	$C_2^1 \times C_2^2$
C_4^1	0	0	0	1	0	0	1	0	$C_2^0 \times C_2^2$
	1	0	0	1	1	1	0	1	$C_2^3 \times C_2^1$
C_4^5	0	1	0	1	0	0	0	1	$C_2^0 \times C_2^1$
	1	1	0	1	1	1	0	1	$C_2^3 \times C_2^2$
C_4^3	0	0	1	1	1	0	0	0	$C_2^2 \times C_2^0$
	1	0	1	1	0	1	1	1	$C_2^1 \times C_2^3$
C_4^7	0	1	1	1	1	0	1	1	$C_2^2 \times C_2^3$
	1	1	1	1	0	1	0	0	$C_2^1 \times C_2^0$

IPR2025-00395
Petitioners' Exhibit 1011
Page 59 of 256

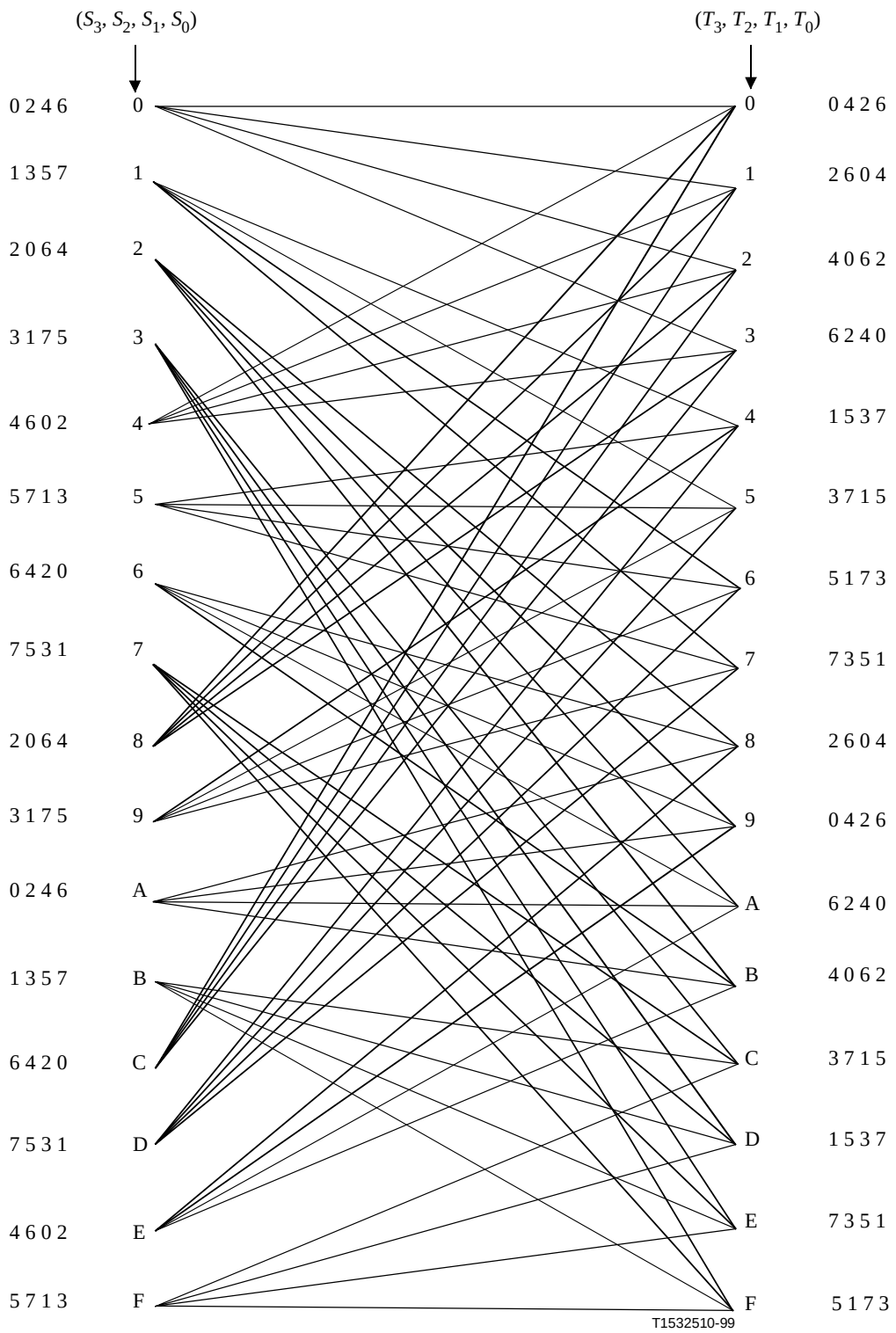

Figure 7-16/G.992.1 – Trellis diagram

Figure 7-16 shows the trellis diagram based on the finite state machine in Figure 7-14, and the one-to-one correspondence between (u_2, u_1, u_0) and the 4-dimensional cosets. In the figures, $S = (S_3, S_2, S_1, S_0)$ represents the current state, while $T = (T_3, T_2, T_1, T_0)$ represents the next state in the finite state machine. S is connected to T in the constellation diagram by a branch determined by the values of u_2 and u_1. The branch is labelled with the 4-dimensional coset specified by the values of u_2, u_1 (and $u_0 = S_0$, see Figure 7-15). To make the constellation diagram more readable, the indices of the 4-dimensional coset labels are listed next to the starting and end points of the

IPR2025-00395
Petitioners' Exhibit 1011
Page 60 of 256

branches, rather than on the branches themselves. The leftmost label corresponds to the uppermost branch for each state. The constellation diagram is used when decoding the trellis code by the Viterbi algorithm.

7.8.4 Constellation encoder

For a given subcarrier, the encoder shall select an odd-integer point (X, Y) from the square-grid constellation based on the b bits of either $\{v_{b-1}, v_{b-2}, ..., v_1, v_0\}$ or $\{w_{b-1}, w_{b-2}, ..., w_1, w_0\}$. For convenience of description, these b bits are identified with an integer label whose binary representation is $(v_{b-1}, v_{b-2}, ..., v_1, v_0)$, but the same encoding rules apply also to the w vector. For example, for $b = 2$, the four constellation points are labelled 0, 1, 2, 3 corresponding to $(v_1, v_0) = (0, 0), (0, 1), (1, 0), (1, 1)$, respectively.

NOTE – v_0 is the first bit extracted from the buffer.

7.8.4.1 Even values of *b*

For even values of b, the integer values X and Y of the constellation point (X, Y) shall be determined from the b bits $\{v_{b-1}, v_{b-2}, ..., v_1, v_0\}$ as follows. X and Y are the odd integers with two-complement binary representations $(v_{b-1}, v_{b-3}, ..., v_1, 1)$ and $(v_{b-2}, v_{b-4}, ..., v_0, 1)$, respectively. The most significant bits (MSBs), v_{b-1} and v_{b-2}, are the sign bits for X and Y, respectively.

Figure 7-17 shows example constellations for $b = 2$ and $b = 4$.

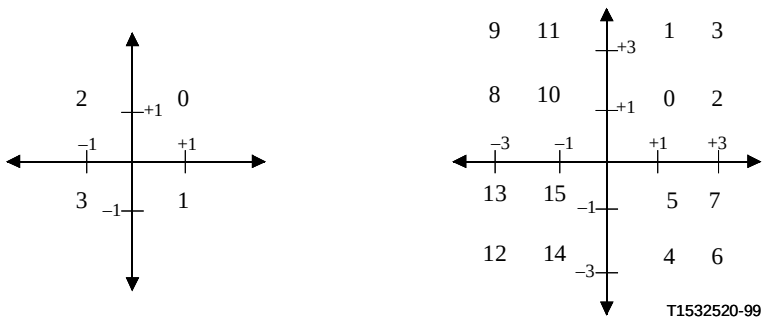

NOTE – The values of X and Y shown represent the output of the constellation encoder. These values require appropriate scaling such that:
1) all constellations regardless of size represent the same RMS energy; and
2) by the fine gain scaling (7.10) before modulation by the IDFT (7.11.2).

Figure 7-17/G.992.1 – Constellation labels for *b* = 2 and *b* = 4

The 4-bit constellation can be obtained from the 2-bit constellation by replacing each label n by a 2×2 block of labels as shown in Figure 7-18.

$4n + 1$	$4n + 3$
$4n$	$4n + 2$

Figure 7-18/G.992.1 – Expansion of point *n* into the next larger square constellation

IPR2025-00395
Petitioners' Exhibit 1011
Page 61 of 256

The same procedure can be used to construct the larger even-bit constellations recursively.

The constellations obtained for even values of b are square in shape. The least significant bits $\{v_1, v_0\}$ represent the coset labelling of the constituent 2-dimensional cosets used in the 4-dimensional Wei trellis code.

7.8.4.2 Odd values of *b*, *b* = 3

Figure 7-19 shows the constellation for the case $b = 3$.

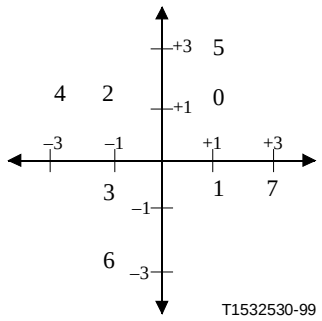

NOTE – The values of X and Y shown represent the output of the constellation encoder. These values require appropriate scaling such that:

1) all constellations regardless of size represent the same RMS energy; and
2) by the fine gain scaling (7.10) before modulation by the IDFT (7.11.2).

Figure 7-19/G.992.1 – Constellation labels for *b* = 3

7.8.4.3 Odd values of *b*, *b* > 3

If b is odd and greater than 3, the 2 MSBs of X and the 2 MSBs of Y are determined by the 5 MSBs of the b bits. Let $c = (b + 1)/2$, then X and Y have the two-complement binary representations $(X_c, X_{c-1}, v_{b-4}, v_{b-6}, ..., v_3, v_1, 1)$ and $(Y_c, Y_{c-1}, v_{b-5}, v_{b-7}, v_{b-9}, ..., v_2, v_0, 1)$, where X_c and Y_c are the sign bits of X and Y respectively. The relationship between X_c, X_{c-1}, Y_c, Y_{c-1} and v_{b-1}, v_{b-2}, ..., v_{b-5} is shown in Table 7-12.

IPR2025-00395
Petitioners' Exhibit 1011
Page 62 of 256

Table 7-12/G.992.1 – Determining the top 2 bits of *X* and *Y*

$v_{b-1}, v_{b-2}, ..., v_{b-5}$	X_c, X_{c-1}	Y_c, Y_{c-1}
0 0 0 0 0	0 0	0 0
0 0 0 0 1	0 0	0 0
0 0 0 1 0	0 0	0 0
0 0 0 1 1	0 0	0 0
0 0 1 0 0	0 0	1 1
0 0 1 0 1	0 0	1 1
0 0 1 1 0	0 0	1 1
0 0 1 1 1	0 0	1 1
0 1 0 0 0	1 1	0 0
0 1 0 0 1	1 1	0 0
0 1 0 1 0	1 1	0 0
0 1 0 1 1	1 1	0 0
0 1 1 0 0	1 1	1 1
0 1 1 0 1	1 1	1 1
0 1 1 1 0	1 1	1 1
0 1 1 1 1	1 1	1 1
1 0 0 0 0	0 1	0 0
1 0 0 0 1	0 1	0 0
1 0 0 1 0	1 0	0 0
1 0 0 1 1	1 0	0 0
1 0 1 0 0	0 0	0 1
1 0 1 0 1	0 0	1 0
1 0 1 1 0	0 0	0 1
1 0 1 1 1	0 0	1 0
1 1 0 0 0	1 1	0 1
1 1 0 0 1	1 1	1 0
1 1 0 1 0	1 1	0 1
1 1 0 1 1	1 1	1 0
1 1 1 0 0	0 1	1 1
1 1 1 0 1	0 1	1 1
1 1 1 1 0	1 0	1 1
1 1 1 1 1	1 0	1 1

IPR2025-00395
Petitioners' Exhibit 1011
Page 63 of 256

Figure 7-20 shows the constellation for the case $b = 5$.

	24	26	20	22	
19	09	11	01	03	17
18	08	10	00	02	16
31	13	15	05	07	29
30	12	14	04	06	28
	25	27	21	23	

NOTE 1 – As with Figure 7-19, the X and Y values are on a ±1, ±3, … grid.

NOTE 2 – The values of X and Y shown represent the output of the constellation encoder. These values require appropriate scaling such that:

1) all constellations regardless of size represent the same RMS energy; and
2) by the fine gain scaling (7.10) before modulation by the IDFT (7.11.2).

Figure 7-20/G.992.1 – Constellation labels for $b = 5$

The 7-bit constellation shall be obtained from the 5-bit constellation by replacing each label n by the 2 × 2 block of labels as shown in Figure 7-18.

Again, the same procedure shall be used to construct the larger odd-bit constellations recursively. Note also that the least significant bits $\{v_1, v_0\}$ represent the coset labelling of the constituent 2-dimensional cosets used in the 4-dimensional Wei trellis code.

7.9 Constellation encoder – No trellis coding

An algorithmic constellation encoder shall be used to construct constellations with a maximum number of bits equal to N_{downmax}, where $8 \le N_{\text{downmax}} \le 15$. The constellation encoder shall not use trellis coding with this option.

7.9.1 Bit extraction

Data bits from the frame data buffer shall be extracted according to a reordered bit allocation table b'_i, least significant bit first. The number of bits per tone, b'_i, can take any non-negative integer values not exceeding N_{downmax}, and greater than 1. For a given tone $b = b'_i$ bits are extracted from the data frame buffer, and these bits form a binary word $\{v_{b-1}, v_{b-2}, ..., v_1, v_0\}$. The first bit extracted shall be v_0 , the LSB.

7.9.2 Constellation encoder

The constellation encoder requirements are as specified in 7.8.4.

7.10 Gain scaling

For the transmission of data symbols gain scaling, g_i, shall be applied as requested by the ATU-R (see 10.9.14 and A.1.2.1 or B.1.3.1) and possibly updated during Showtime via the bit swap procedure. Only values of g_i equal to zero or within a range of approximately 0.19 to 1.33 (i.e. –14.5 dB to +2.5 dB) may be used. For the transmission of synchronization symbols, no gain scaling shall be applied as defined in Annexes A, B and C.

IPR2025-00395
Petitioners' Exhibit 1011
Page 64 of 256

Each constellation point, (X_i, Y_i), i.e. complex number $X_i + jY_i$, output from the encoder is multiplied by g_i:

$$Z_i = g_i\,(X_i + jY_i) \tag{7-20}$$

NOTE – The g_i define a scaling of the root mean square (rms) subcarrier levels relative to those used in C-MEDLEY (see 10.6.6). They are independent of any methods that manufacturers may use to simplify implementation (e.g. constellation nesting).

7.11 Modulation

7.11.1 Subcarriers

The frequency spacing, Δf, between subcarriers is 4.3125 kHz, with a tolerance of ±50 ppm.

7.11.1.1 Data subcarriers

The channel analysis signal defined in 10.6.6 allows for a maximum of 255 carriers (at frequencies $n\Delta f$, n = 1 to 255) to be used. The lower limit of n depends on both the duplexing and service options selected. For example, for ADSL above POTS service option as defined in Annex A, if overlapped spectrum is used to separate downstream and upstream signals, then the lower limit on n is determined by the POTS splitting filters; if frequency-division multiplexing (FDM) is used the lower limit is set by the downstream-upstream separation filters.

In all cases the cut-off frequencies of these filters are completely at the discretion of the manufacturer, and the range of usable n is determined during the channel estimation.

7.11.1.2 Pilot

Carrier #N_{pilot} (f_{pilot} = 4.3125 × N_{pilot} kHz) shall be reserved for a pilot; that is $b(N_{\text{pilot}}) = 0$ and $g(N_{\text{pilot}}) = g_{\text{sync}}$.

N_{pilot} and g_{sync} are defined in Annexes A, B and C. The value g_{sync} represents the gain scaling applied to the sync symbol.(See 10.4.2.)

The data modulated onto the pilot subcarrier shall be a constant {0,0}. Use of this pilot allows resolution of sample timing in a receiver modulo-8 samples. Therefore a gross timing error that is an integer multiple of eight samples could still persist after a micro-interruption (e.g. a temporary short-circuit, open circuit or severe line hit); correction of such timing errors is made possible by the use of the synchronization symbol defined in 7.11.3.

7.11.1.3 Nyquist frequency

The carrier at the Nyquist frequency (#256) shall not be used for user data and shall be real valued; other possible uses are for further study.

7.11.1.4 DC

The carrier at DC (#0) shall not be used, and shall contain no energy.

7.11.2 Modulation by the inverse discrete Fourier transform (IDFT)

The modulating transform defines the relationship between the 512 real values x_n and the Z_i:

$$x_n = \sum_{i=0}^{511} \exp\left(\frac{j\pi ni}{256}\right) Z_i \qquad \text{for } n = 0 \text{ to } 511 \tag{7-21}$$

IPR2025-00395
Petitioners' Exhibit 1011
Page 65 of 256

The constellation encoder and gain scaling generate only 255 complex values of Z_i. In order to generate real values of x_n, the input values (255 complex values plus zero at DC and one real value for Nyquist if used) shall be augmented so that the vector Z has Hermitian symmetry. That is,

$$Z_i = \text{conj}\,(Z'_{512-i}) \qquad \text{for } i = 257 \text{ to } 511 \tag{7-22}$$

7.11.3 Synchronization symbol

The synchronization symbol permits recovery of the frame boundary after micro-interruptions that might otherwise force retraining.

The data symbol rate, f_{symb} = 4 kHz, the carrier separation, Δf = 4.3125 kHz, and the IDFT size, N = 512, are such that a cyclic prefix of 40 samples could be used. That is,

$$(512 + 40) \times 4.0 = 512 \times 4.3125 = 2208 \tag{7-23}$$

The cyclic prefix shall, however, be shortened to 32 samples, and a synchronization symbol (with a nominal length of 544 samples) is inserted after every 68 data symbols. That is,

$$(512 + 32) \times 69 = (512 + 40) \times 68 \tag{7-24}$$

The data pattern used in the synchronization symbol shall be the pseudo-random sequence PRD, (d_n, for n == 1 to 512) defined by:

$$d_n = 1 \qquad \text{for } n = 1 \text{ to } 9 \tag{7-25}$$

$$d_n = d_{n-4} \oplus d_{n-9} \qquad \text{for } n = 10 \text{ to } 512 \tag{7-26}$$

The first pair of bits (d_1 and d_2) shall be used for the DC and Nyquist subcarriers (the power assigned to them is zero, so the bits are effectively ignored); the first and second bits of subsequent pairs are then used to define the X_i and Y_i for i = 1 to 255 as shown in Table 7-13.

Table 7-13/G.992.1 – Mapping of two data bits into a 4-QAM constellation

d_{2i+1}, d_{2i+2}	Decimal label (Note)	X_i, Y_i
0 0	0	+ +
0 1	1	+ –
1 0	2	– +
1 1	3	– –
NOTE – This labelling is different from the mapping in Figure 7-17 where d_{2i+1} would be considered the first and least significant bit.		

The period of the PRD is only 511 bits, so d_{512} shall be equal to d_1.

The d_1-d_9 shall be re-initialized for each synchronization symbol, so each symbol uses the same data.

Bits 129 and 130, which modulate the pilot carrier, shall be overwritten by {0,0}: generating the {+,+} constellation.

The minimum set of subcarriers to be used is the set used for data transmission (i.e. those for which $b_i > 0$); subcarriers for which $b_i = 0$ may be used at a reduced PSD as defined in transmit PSD paragraphs of Annexes A, B and C. The data modulated onto each subcarrier shall be as defined above; it shall not depend on which subcarriers are used.

7.11.4 Inverse synchronization symbol (Annex C only)

For Annex C, see C.4.7.1.

IPR2025-00395
Petitioners' Exhibit 1011
Page 66 of 256

7.12 Cyclic prefix

The last 32 samples of the output of the IDFT (x_n for n = 480 to 511) shall be prepended to the block of 512 samples and read out to the digital-to-analogue converter (DAC) in sequence. That is, the subscripts, n, of the DAC samples in sequence are 480 ... 511, 0 ... 511.

The cyclic prefix shall be used for all symbols beginning with the C-RATES1 segment of the initialization sequence, as defined in 10.6.2.

7.13 Transmitter dynamic range

The transmitter includes all analogue transmitter functions: the D/A converter, the anti-aliasing filter, the hybrid circuitry, and the high-pass part of the POTS or ISDN splitter. The transmitted signal shall conform to the frequency requirements as described in 7.11.1 for frequency spacing.

7.13.1 Maximum clipping rate

The maximum output signal of the transmitter shall be such that the signal shall be clipped no more than 0.00001% of the time.

7.13.2 Noise/distortion floor

The signal-to-noise plus distortion ratio of the transmitted signal in a given subcarrier is specified as the ratio of the rms value of the tone in that subcarrier to the rms sum of all the non-tone signals in the 4.3125 kHz frequency band centered on the subcarrier frequency. This ratio is measured for each subcarrier used for transmission using a MultiTone Power Ratio (MTPR) test as shown in Figure 7-21.

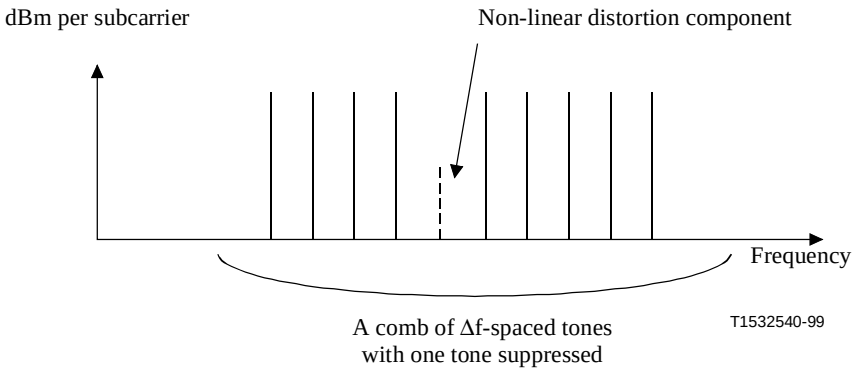

Figure 7-21/G.992.1 – MTPR test

Over the transmission frequency band, the MTPR of the transmitter in any subcarrier shall be no less than ($3N_{\text{downi}} + 20$) dB, where N_{downi} is defined as the size of the constellation (in bits) to be used on subcarrier i . The minimum transmitter MTPR shall be at least 38 dB (corresponding to an N_{downi} of 6) for any subcarrier.

NOTE – Signals transmitted during normal initialization and data transmission cannot be used for this test because the DMT symbols have a cyclic prefix appended, and the PSD of a non-repetitive signal does not have nulls at any subcarrier frequencies. A gated FFT-based analyser could be used, but this would measure both the non-linear distortion and the linear distortion introduced by the transmit filter. Therefore this test will require that the transmitter be programmed with special software, probably to be used during development only. The subject of an MTPR test that can be applied to a production modem is for further study.

IPR2025-00395
Petitioners' Exhibit 1011
Page 67 of 256

7.14 ATU-C Downstream Transmitter spectral masks

Spectral masks for the three service options are defined in Annexes A, B and C.

For Annex A, see A.1.2 and A.1.3.

For Annex B, see B.1.3.

For Annex C, see C.4.8.

7.15 Dual Bitmapping and Rate Conversion (Annex C only)

For Annex C, see C.4.4.

7.16 FEXT Bitmapping (Annex C only)

For Annex C, see C.4.5.

8 ATU-R Functional Characteristics

An ATU-R may support STM transmission or ATM transmission or both. If STM is supported, it shall be as defined in 8.1. If ATM is supported, it shall be as defined in 8.2.

Framing modes that shall be supported depend upon the ATU-R being configured for either STM or ATM transport, and are defined in 8.1.4 and 8.2.3 respectively. If framing mode k is supported, then modes $k - 1, \ldots, 0$ shall also be supported.

During initialization, the ATU-C and ATU-R shall indicate a framing mode number 0, 1, 2 or 3 which they intend to use. The lowest indicated framing mode shall be used (see 10.6.4 and 10.7.6).

An ATU-R may support reconstruction of a Network Timing Reference (NTR) from the downstream indicator bits.

8.1 STM Transmission Protocol Specific functionalities

8.1.1 ATU-R input and output T interfaces for STM transport

The functional data interfaces at the ATU-R are shown in Figure 8-1. Output interfaces for the high-speed downstream simplex bearer channels are designated AS0 through AS3; input-output interfaces for the duplex bearer channels are designated LS0 through LS2. There may also be a functional interface to transport operations, administration and maintenance (OAM) indicators from the CI to the ATU-R; this interface may physically be combined with the LS0 interface.

The data rates of the input and output data interfaces at the ATU-R for the default configurations are specified in 6.1.

IPR2025-00395
Petitioners' Exhibit 1011
Page 68 of 256

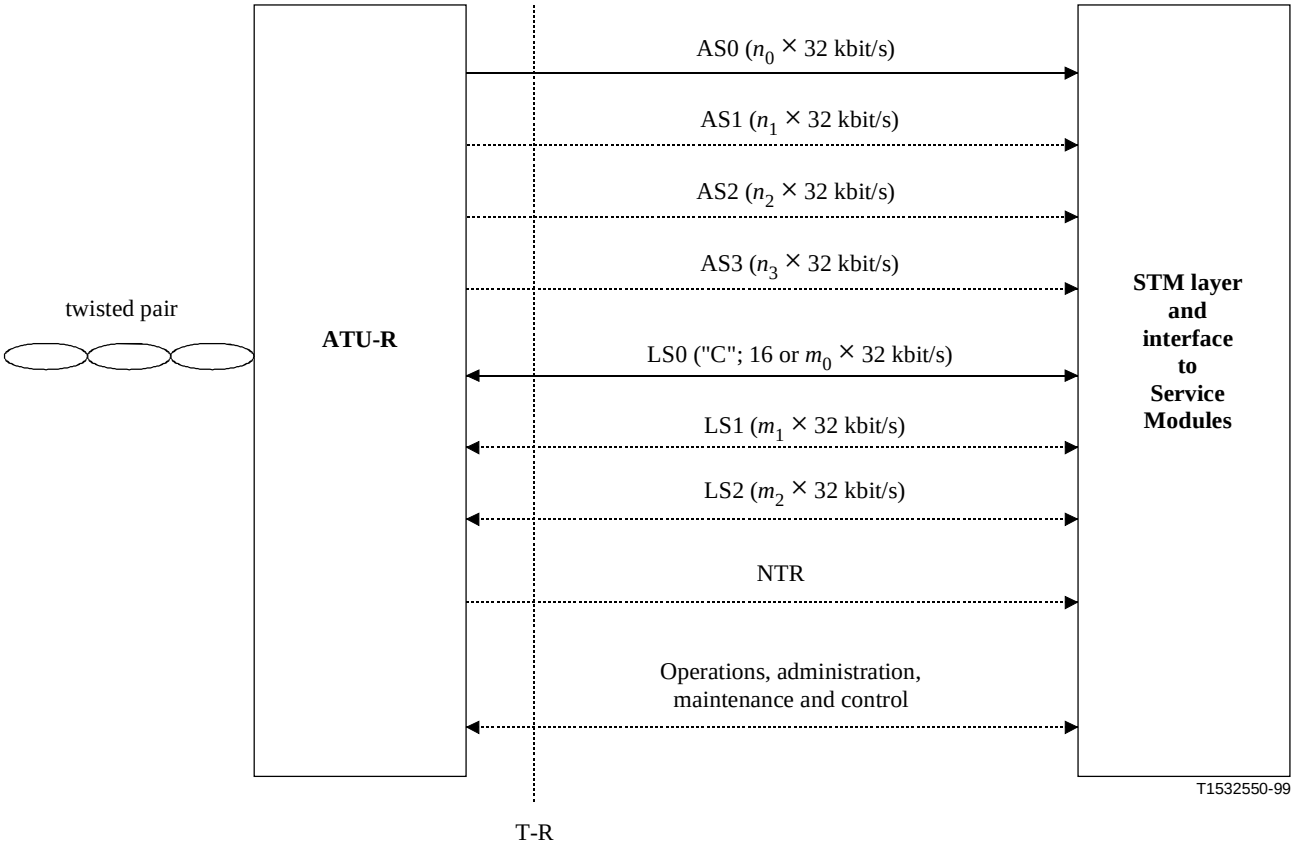

NOTE – Optional bearer channels (both duplex and simplex) and features are shown with dotted lines.

Figure 8-1/G.992.1 – ATU-R functional interfaces for STM transport at the T-R reference point

8.1.2 Downstream simplex channels – Transceiver bit rates

The simplex channels are transported in the downstream direction only; therefore their data interfaces at the ATU-R operate only as outputs. The rates are the same as those for the ATU-C transmitter, as specified in 6.1.

8.1.3 Duplex channels – Transceiver bit rates

The duplex channels are transported in both directions, so the ATU-R shall provide both input and output data interfaces. The rates are the same as for the ATU-C, as specified in 6.1.

8.1.4 Framing Structure for STM transport

An ATU-R configured for STM transport shall support the full overhead framing structure 0 as specified in 8.4. The support of full overhead framing structure 1 and reduced overhead framing structures 2 and 3 is optional.

Preservation of T-R interface byte boundaries (if present) at the U-R interface may be supported for any of the U-R interface framing structures.

An ATU-R configured for STM transport may support reconstruction of a Network Timing Reference (NTR).

IPR2025-00395
Petitioners' Exhibit 1011
Page 69 of 256

8.2 ATM Transport Protocol Specific functionalities

8.2.1 ATU-R input and output T interfaces for ATM transport

The ATU-R input and output T interfaces are identical to the ATU-C input and output interfaces, as described in 7.2 and as shown in Figure 8-2.

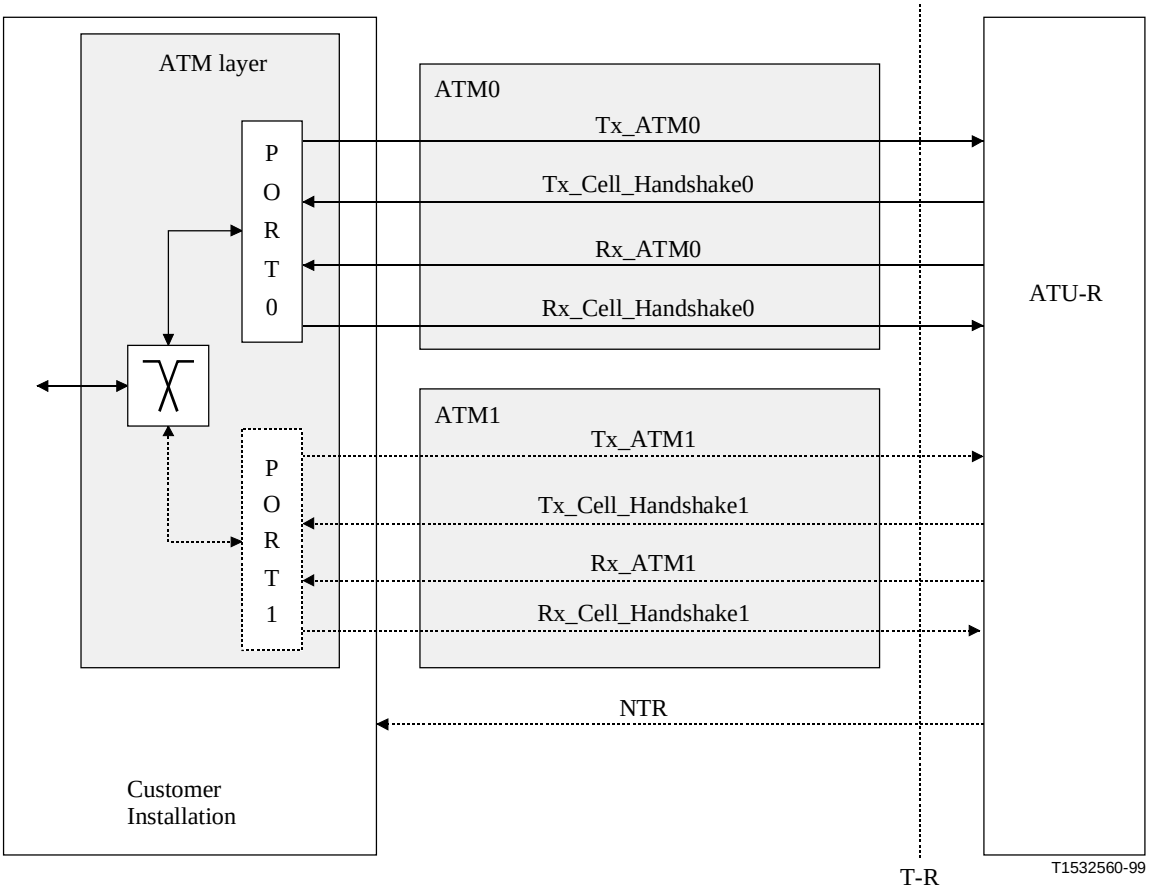

Figure 8-2/G.992.1 – ATU-R functional interfaces to the ATM layer at the T-R reference point

8.2.2 ATM Cell specific functionalities

The ATM cell specific functionalities performed at the ATU-R shall be identical to the ATM cell specific functionalities performed at the ATU-C, as described in 7.2.3.

8.2.3 Framing Structure for ATM transport

An ATU-R configured for ATM transport shall support the full overhead framing structures 0 and 1 as specified in 8.4. The support of reduced overhead framing structures 2 and 3 is optional.

The ATU-R transmitter shall preserve T-R interface byte boundaries (explicitly present or implied by ATM cell boundaries) at the U-R interface, independent of the U-R interface framing structure.

An ATU-R configured for ATM transport may support reconstruction of a Network Timing Reference (NTR).

To ensure framing structure 0 interoperability between an ATM ATU-R and an ATM cell TC plus an STM ATU-C (i.e. ATM over STM), the following shall apply:

- an STM ATU-C transporting ATM cells and not preserving V-C byte boundaries at the U-C interface shall indicate during initialization that frame structure 0 is the highest frame

IPR2025-00395
Petitioners' Exhibit 1011
Page 70 of 256

structure supported;

- an STM ATU-C transporting ATM cells and preserving V-C byte boundaries at the U-C interface shall indicate during initialization that frame structure 0, 1, 2 or 3 is the highest frame structure supported, as applicable to the implementation;
- an ATM ATU-R receiver operating in framing structure 0 cannot assume that the ATU-C transmitter will preserve V-C interface byte boundaries at the U-C interface and shall therefore perform the cell delineation bit-by-bit (see 7.2.3.5).

8.3 Network timing reference

If the ATU-C has indicated that it will use indicator bits 20 to 23 (see 10.6.4) to transmit the change of phase offset, the ATU-R may deliver the 8 kHz signal to the T-R interface.

8.4 Framing

Framing of the upstream signal (ATU-R transmitter) closely follows the downstream framing (ATU-C transmitter), which is specified in 7.4, but with the following exceptions:

- there are no ASx channels and no AEX byte;
- a maximum of three channels exist, so that only three B_F, B_I pairs are specified;
- the minimum RS FEC coding parameters and interleave depth differ (see Table 8-3);
- four bits of the fast and sync bytes are unused (corresponding to the bit positions used by the ATU-C transmitter to specify synchronization control for the ASx channels) (see Tables 8-1 and 8-2);
- the four indicator bits for NTR transport are not used in upstream direction.

Two types of framing are defined: full overhead and reduced overhead. Furthermore, two versions of full overhead and two versions of reduced overhead are defined. The four resulting framing structures are defined as for the ATU-C in 7.4 and are referred to as framing structures 0, 1, 2 and 3.

Requirements for framing structures to be supported depend upon the ATU-R being configured for either STM or ATM transport, and are defined in 8.1.4 and 8.2.3, respectively.

As specified in clause 5, outside the ASx/LSx serial interfaces data bytes are transmitted MSB first in accordance with Recommendations G.703, G.707, I.361 and I.432.1. All serial processing in the ADSL frame (e.g. CRC, scrambling, etc.) shall, however, be performed LSB first, with the outside world MSB considered by the ADSL as LSB. As a result, the first incoming bit (outside world MSB) will be the first processed bit inside the ADSL (ADSL LSB).

8.4.1 Data symbols

The ATU-R transmitter is functionally similar to the ATU-C transmitter, as specified in 7.4.1, except that up to three duplex data channels are synchronized to the 4 kHz ADSL DMT symbol rate (instead of up to four simplex and three duplex channels as is the case for the ATU-C) and multiplexed into the two separate buffers (fast and interleaved). The ATU-R transmitter and its associated reference points for data framing are shown in Figures 5-3 and 5-4.

8.4.1.1 Superframe structure

The superframe structure of the ATU-R transmitter is identical to that of the ATU-C transmitter, as specified in 7.4.1.1 and shown in Figure 7-5.

The ATU-R shall support the indicator bits defined in Table 7-2. The indicator bits, ib20-23, shall not transport NTR in the upstream direction and shall be set to "1".

IPR2025-00395
Petitioners' Exhibit 1011
Page 71 of 256

8.4.1.2 Frame structure (with full overhead)

Each data frame shall be encoded into a DMT symbol, as described in 8.8 through 8.11.4. As specified for the ATU-C and shown in Figure 7-5, each frame is composed of a fast data buffer and an interleaved data buffer, and the frame structure has a different appearance at each of the reference points (A, B and C). The bytes of the fast data buffer shall be clocked into the constellation encoder first, followed by the bytes of the interleaved data buffer. Bytes are clocked least significant bit first.

The assignment of bearer channels to the fast and interleaved buffers shall be configured during initialization (see 10.7.4) with the exchange of a (B_F, B_I) pair for each data stream, where B_F designates the number of bytes of a given data stream to allocate to the fast buffer, and B_I designates the number of bytes allocated to the interleaved data buffer.

The three possible (B_F, B_I) pairs are B_F(LSx), B_I(LSx) for X = 0, 1 and 2, for the duplex channels; they are specified as for the ATU-C in 10.7.4.

8.4.1.2.1 Fast data buffer

The frame structure of the fast data buffer is shown in Figure 8-3 for the three reference points that are defined in Figures 5-3 and 5-4. This structure is the same as that specified for the ATU-C with the following exceptions:

- ASx bytes do not appear;
- the AEX byte does not appear.

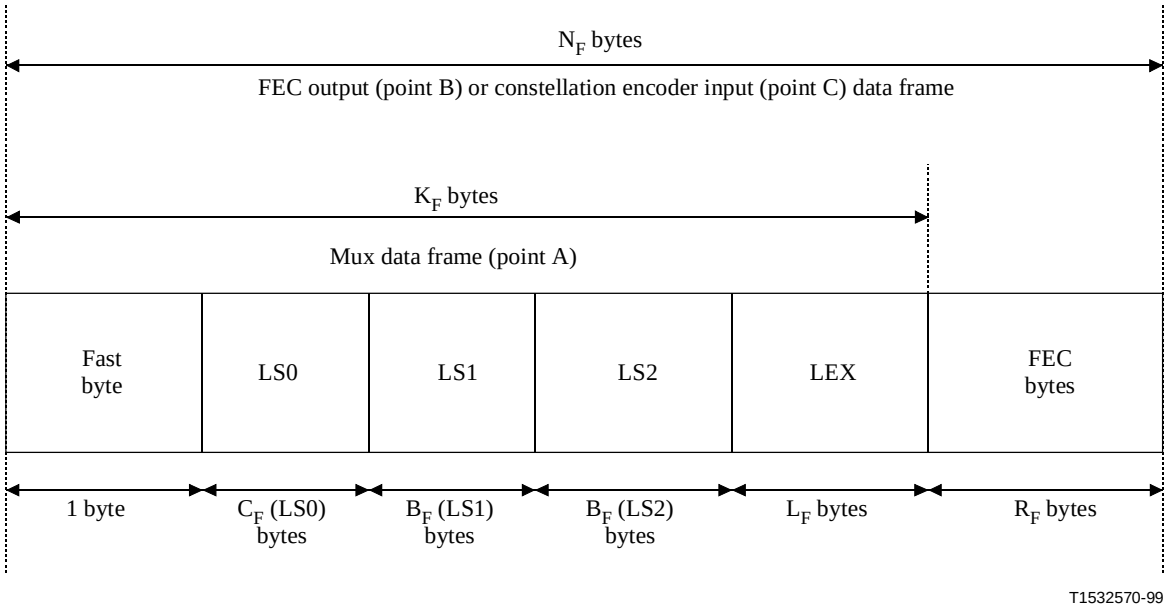

Figure 8-3/G.992.1 – Fast data buffer – ATU-R transmitter

IPR2025-00395
Petitioners' Exhibit 1011
Page 72 of 256

The following shall hold for the parameters shown in Figure 8-3:

$$C_F(LS0) = 0 \quad \text{if } B_F(LS0) = 255\ (11111111_2) \tag{8-1}$$

$$= B_F(LS0) \quad \text{otherwise}$$

$$L_F = 0 \quad \text{if } B_F(LS0) = B_F(LS1) = B_F(LS2) = 0 \tag{8-2}$$

$$= 1 \quad \text{otherwise}$$

$$K_F = 1 + C_F(LS0) + B_F(LS1) + B_F(LS2) + L_F \tag{8-3}$$

$$N_F = K_F + R_F \tag{8-4}$$

where:

R_F = number of upstream FEC redundancy bytes in fast path.

At reference point A (the mux data frame) in Figures 5-3 and 5-4, the fast buffer always contains at least the fast byte. This is followed by B_F(LS0) bytes of channel LS0, then B_F(LS1) bytes of channel LS1, and B_F(LS2) bytes of channel LS2, and if any B_F(LSx) is non-zero, a LEX byte.

When B_F(LS0) = 255 (11111111_2), no separate bytes are included for the LS0 channel. Instead, the 16 kbit/s C-channel shall be transported in every other LEX byte on average, using the synchronization byte to denote when to add the LEX byte to the LS0 bearer channel.

R_F FEC redundancy bytes shall be added to the mux data frame (reference point A) to produce the FEC output data frame (reference point B), where R_F is given in the C-RATES1 signal options received from the ATU-C during initialization (see 10.6.2). Because the data from the fast data buffer is not interleaved, the constellation encoder input data frame (reference point C) is identical to the FEC output data frame (reference point B).

8.4.1.2.2 Interleaved data buffer

The frame structure of the interleaved data buffer is shown in Figure 8-4 for the three reference points that are defined in Figures 5-3 and 5-4. This structure is the same as that specified for the ATU-C, with the following exceptions:

- ASx bytes do not appear;
- the AEX byte does not appear.

IPR2025-00395
Petitioners' Exhibit 1011
Page 73 of 256

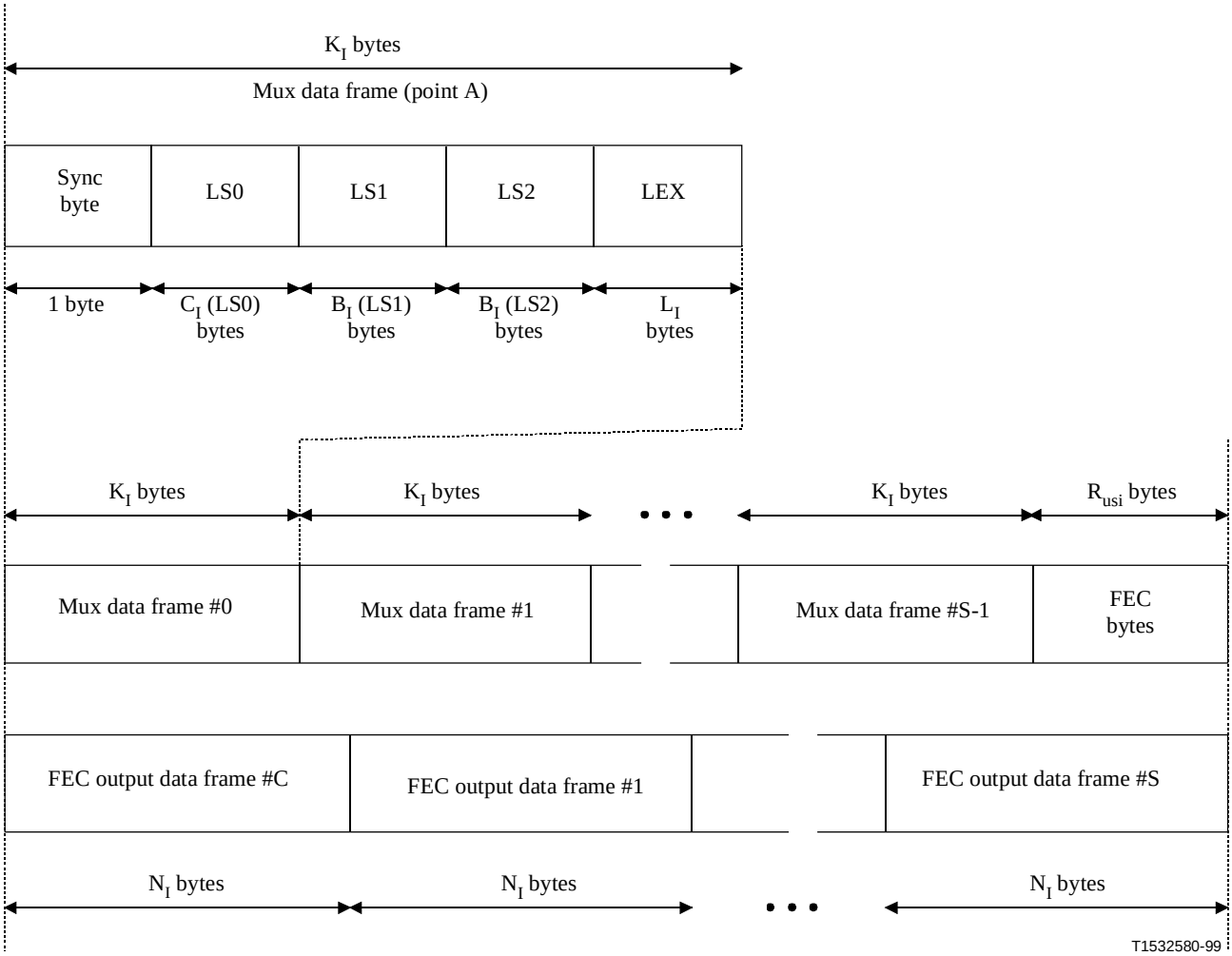

Figure 8-4/G.992.1 – Interleaved data buffer – ATU-R transmitter

The following shall hold for the parameters shown in Figure 8-4:

$$C_I(LS0) = 0 \quad \text{if } B_I(LS0) = 255\ (11111111_2) \tag{8-5}$$

$$= B_I(LS0) \quad \text{otherwise}$$

$$L_I = 0 \quad \text{if } B_I(LS0) = B_I(LS1) = B_I(LS2) = 0 \tag{8-6}$$

$$= 1 \quad \text{otherwise}$$

$$K_I = 1 + C_I(LS0) + B_I(LS1) + B_I(LS2) + L_I \tag{8-7}$$

$$N_I = (S \times K_I + R_I)/S \tag{8-8}$$

where:

R_I = number of upstream FEC redundancy bytes in interleaved path; and

S = number of mux data frames per FEC codeword (see 8.6).

8.4.1.3 Hyperframe structure (Annex C only)

For Annex C, see C.5.1.2.

8.4.1.4 Subframe structure (Annex C only)

For Annex C, see C.5.1.3.

IPR2025-00395
Petitioners' Exhibit 1011
Page 74 of 256

8.4.1.5 Cyclic redundancy check (CRC)

Two cyclic redundancy checks (CRCs) – one for the fast data buffer and one for the interleaved data buffer – are generated for each superframe and transmitted in the first frame of the following superframe. Eight bits per buffer type (fast or interleaved) per superframe are allocated to the CRC check bits. These bits are computed from the *k* message bits using the equation:

The CRC bits are transported in the fast byte (8 bits) of frame 0 in the fast data buffer, and the sync byte (8 bits) of frame 0 in the interleaved data buffer.

The bits covered by the CRC include:

- for the fast data buffer:
  - *frame* 0: LSx bytes ($X = 0, 1, 2$), followed by the LEX byte;
  - *all other frames:* fast byte, followed by LSx bytes ($X = 0, 1, 2$), and LEX byte.
- for the interleaved data buffer:
  - *frame* 0: LSx bytes ($X = 0, 1, 2$), followed by the LEX byte;
  - *all other frames:* sync byte, followed by LSx bytes ($X = 0, 1, 2$), and LEX byte.

Each byte shall be clocked into the CRC least significant bit first.

The CRC-generating polynomial, and the method of generating the CRC byte are the same as for the downstream data; these are specified in 7.4.1.3.

8.4.2 Synchronization

If the bit timing base of the input user data streams is not synchronous with the ADSL modem timing base, the input data streams shall be synchronized to the ADSL timing base using the synchronization control mechanism (consisting of synchronization control byte and the LEX byte). Forward-error-correction coding shall always be applied to the synchronization control byte(s).

If the bit timing base of the input user data streams is synchronous with the ADSL modem timing base, then the synchronization control mechanism is not needed. The synchronization control byte shall always indicate "no synchronization action" (see Table 8-1).

8.4.2.1 Synchronization for the fast data buffer

Synchronization control for the fast data buffer can occur in frames 2 through 33 and 36 through 67 of an ADSL superframe as described in 7.4.1.1, where the fast byte may be used as the synchronization control byte. No synchronization action is to be taken for those frames in which the fast byte is used for CRC, fixed indicator bits, or EOC.

The format of the fast byte when used as synchronization control for the fast data buffer shall be as given in Table 8-1.

In the case where no signals are allocated to the interleaved data buffer, the sync byte carries the AOC data directly as shown in Figure 7-7.

IPR2025-00395
Petitioners' Exhibit 1011
Page 75 of 256

Table 8-1/G.992.1 – Fast byte format for synchronization

Bit	Application	Specific usage
sc7-sc4	Not used	Set to "0_2" until specified otherwise
sc3, sc2	LSx channel designator	"00_2": channel LS0 "01_2": channel LS1 "10_2": channel LS2 "11_2": no synchronization action
sc1	Synchronization control for the designated LSx channel	"1_2": add LEX byte to designated LSx channel "0_2": delete last byte from designated LSx channel
sc0	Synchronization/EOC designator	"0_2": perform synchronization control as indicated in sc7-sc1 "1_2": this byte is part of an EOC frame

If the bit timing base of the input bearer channels (LSx) is synchronous with the ADSL modem timing base, then ADSL systems need not perform synchronization control by adding or deleting LEX bytes to/from the designated LSx channels, and the synchronization control byte shall indicate "no synchronization action" (i.e. sc7-0 coded "$000011X0_2$", with X discretionary).

When the data rate of the C-channel is 16 kbit/s, the LS0 bearer channel shall be transported in the LEX byte, using the "add LEX byte to designated LSx channel", with LS0 as the designated channel, every other frame on average.

8.4.2.2 Synchronization for the interleaved data buffer

Synchronization control for the interleaved data buffer can occur in frames 1 through 67 of an ADSL superframe as described in 7.4.1.1, where the sync byte may be used as the synchronization control byte. No synchronization action shall be taken during frame 0, where the sync byte is used for CRC, and frames when the LEX byte carries the AOC.

The format of the sync byte when used as synchronization control for the interleaved data buffer shall be as given in Table 8-2. In the case where no signals are allocated to the interleaved data buffer, the sync byte shall carry the AOC data directly, as shown in Figure 7-7 in 7.4.1.1.

Table 8-2/G.992.1 – Sync byte format for synchronization

Bit	Application	Specific usage
sc7-sc4	Not used	Set to "0_2" until specified otherwise
sc3, sc2	LSx channel designator	"00_2":channel LS0 "01_2":channel LS1 "10_2":channel LS2 "11_2":no synchronization action
sc1	Synchronization control for the designated LSx channel	"1_2": add LEX byte to designated LSx channel "0_2": delete last byte from designated LSx channel
sc0	Synchronization/AOC designator	"0_2": perform synchronization control as indicated in sc3-sc1 "1_2": LEX byte carries ADSL overhead control channel data; a delete synchronization control may be allowed as indicated in sc3-sc1

IPR2025-00395
Petitioners' Exhibit 1011
Page 76 of 256

When the data rate of the C-channel is 16 kbit/s, the LS0 bearer channel shall be transported in the LEX byte, using the "add LEX byte to designated LSx channel", with LS0 as the designated channel, every other frame on average.

If the bit timing base of the input bearer channels (LSx) is synchronous with the ADSL modem timing base, then ADSL systems need not perform synchronization control by adding or deleting LEX bytes to/from the designated LSx channels, and the synchronization control byte shall indicate "no synchronization action". In this case, and when framing structure 1 is used, the sc7-0 shall always be coded "$000011XX_2$", with X discretionary. When sc0 is set to "1", the LEX byte shall carry AOC. When sc0 is set to "0", the LEX byte shall be coded 00_{16}. The sc0 may be set to "0" only in between transmissions of 5 concatenated and identical AOC messages.

8.4.3 Reduced overhead framing

The format described in 8.4.1.2 for full overhead framing includes overhead to allow for the synchronization of three LSx bearer channels. When the synchronization function described in 8.4.2 is not required, the ADSL equipment may operate in a reduced overhead mode. This mode retains all the full overhead mode functions except synchronization control. When using the reduced overhead framing, the framing structure shall be as defined in 7.4.3.1 (when using separate fast and sync bytes) or 7.4.3.2 (when using merged fast and sync bytes).

8.5 Scramblers

The data streams output from the fast and interleaved buffers shall be scrambled separately using the same algorithm as for the downstream signal, specified in 7.5.

8.6 Forward error correction

The upstream data shall be Reed-Solomon coded and interleaved using the same algorithm as for the downstream data, specified in 7.6.

The FEC coding overhead, the number of symbols per FEC codeword, and the interleave depth are given in the C-RATES1 options received from the ATU-C during initialization (see 10.6.2).

The ATU-R shall support upstream transmission with at least any combination of the FEC coding capabilities shown in Table 8-3.

Table 8-3/G.992.1 – Minimum FEC coding capabilities for ATU-R

Parameter	Fast buffer	Interleaved buffer
Parity bytes per RS codeword	R_F = 0, 2, 4, 6, 8, 10, 12, 14, 16 (Note 1)	R_I = 0, 2, 4, 6, 8, 10, 12, 14, 16 (Notes 1 and 2)
DMT symbols per RS codeword	S = 1	S = 1, 2, 4, 8, 16
Interleave depth	not applicable	D = 1, 2, 4, 8
NOTE 1 – R_F can be > 0 only if K_F > 0 and R_I can be > 0 only if K_I > 0. NOTE 2 – R_I shall be an integer multiple of S.		

The ATU-R shall also support downstream transmission with at least any combination of the FEC coding capabilities shown in Table 7-7.

8.7 Tone ordering

The tone-ordering algorithm shall be the same as for the downstream data, specified in 7.7.

IPR2025-00395
Petitioners' Exhibit 1011
Page 77 of 256

8.8 Constellation encoder – Trellis version

Block processing of Wei's 16-state 4-dimensional trellis code to improve system performance is optional. An algorithmic constellation encoder shall be used to construct constellations with a maximum number of bits equal to N_{upmax}, where $8 \leq N_{upmax} \leq 15$.

The encoding algorithm shall be the same as that used for downstream data (with the substitution of the constellation limit of N_{upmax} for $N_{downmax}$), specified in 7.8.

8.9 Constellation encoder – Uncoded version

An algorithmic constellation encoder shall be used to construct constellations with a maximum number of bits equal to N_{upmax} , where $8 \leq N_{upmax} \leq 15$. The encoding algorithm is the same as that used for downstream data (with the substitution of the constellation limit of N_{upmax} for $N_{downmax}$), which is specified in 7.9. The constellation encoder shall not use trellis coding with this option.

8.10 Gain scaling

For the transmission of data symbols gain scaling, g_i, shall be applied as requested by the ATU-C (see 10.8.13 and A.2.4.1 or B.2.2.1) and possibly updated during Showtime via the bit swap procedure. Only values of g_i equal to 0 or within a range of approximately 0.19 to 1.33 (i.e. –14.5 dB to +2.5 dB) may be used. For the transmission of synchronization symbols, gain scaling shall be applied as defined in Annexes A, B and C.

Each constellation point, (X_i, Y_i), i.e. complex number, $X_i + jY_i$, output from the encoder is multiplied by g_i:

$$Z_i = g_i\,(X_i + jY_i) \tag{8-9}$$

NOTE – The g_i define a scaling of the root mean square (rms) subcarrier levels relative to those used in R-MEDLEY (see 10.7.8). They are independent of any methods that manufacturers may use to simplify implementation (e.g. constellation nesting).

8.11 Modulation

The frequency spacing, Δf, between subcarriers shall be 4.3125 kHz with a tolerance of ±50 ppm.

8.11.1 Subcarriers

8.11.1.1 Data subcarriers

The channel analysis signal, defined in 10.7, allows for a maximum of 31 carriers (at frequencies $n\Delta f$) to be used. The range of n depends on the service option selected. For example, for ADSL above POTS (see Annex A) the lower limit is set by the POTS/ADSL splitting filters; the upper limit is set by the transmit and receive band-limiting filters, and shall be no greater than 31; the cut-off frequencies of these filters are at the discretion of the manufacturer because the range of usable n is determined during the channel estimation.

The data subcarriers for Annex B are defined in B.2.3.

8.11.1.2 Nyquist frequency

The subcarrier at the Nyquist frequency shall not be used for user data and shall be real valued; other possible uses are for further study.

The Nyquist frequency for Annexes A and C is specified in A.2.5.

The Nyquist frequency for Annex B is specified in B.2.5.

IPR2025-00395
Petitioners' Exhibit 1011
Page 78 of 256

8.11.1.3 DC

The subcarrier at DC (#0) shall not be used, and shall contain no energy.

8.11.2 Modulation by the inverse discrete Fourier transform

For Annexes A and C, see A.2.1.

For Annex B, see B.2.6.

8.11.3 Synchronization symbol

The synchronization symbol permits recovery of the frame boundary after micro-interruptions that might otherwise force retraining.

The data symbol rate, f_{symb} = 4 kHz, the subcarrier separation, Δf = 4.3125 kHz, and the IDFT size, N = 64, are such that a cyclic prefix of 5 samples could be used. That is,

$$(64 + 5) \times 4.0 = 64 \times 4.3125 = 276 \qquad (8\text{-}10)$$

The cyclic prefix shall, however, be shortened to 4 samples, and a synchronization symbol (with a nominal length of 68 samples) inserted after every 68 data symbols. That is,

$$(64 + 4) \times 69 = (64 + 5) \times 68 \qquad (8\text{-}11)$$

The data pattern used in the synchronization symbol shall be as defined in the appropriate annexes.

For Annexes A and C, see A.2.2.

For Annex B, see B.2.7.

The minimum set of subcarriers to be used is the set used for data transmission (i.e. those for which $b_i > 0$); subcarriers for which $b_i = 0$ may be used at a reduced PSD as defined in transmit PSD paragraphs of Annexes A, B and C. The data modulated onto each subcarrier shall be as defined above; it shall not depend on which subcarriers are used.

8.11.4 Inverse synchronization symbol (Annex C only)

For Annex C, see C.5.5.1.

8.12 Cyclic prefix

For Annexes A and C, see A.2.3.

For Annex B, see B.2.8.

8.13 Transmitter dynamic range

The transmitter includes all analogue transmitter functions: the D/A converter, the anti-aliasing filter, the hybrid circuitry, and the POTS splitter. The transmitted signal shall conform to the frequency requirements described in 8.11.1 for frequency spacing.

8.13.1 Maximum clipping rate

The maximum output signal of the transmitter shall be such that the signal shall be clipped no more than 0.00001% of the time.

8.13.2 Noise/distortion floor

The signal-to-noise plus distortion ratio of the transmitted signal in a given subcarrier is specified as the ratio of the rms value of the full-amplitude tone in that subcarrier to the rms sum of all the non-tone signals in the 4.3125 kHz frequency band centred on the subcarrier frequency. This ratio is measured for each subcarrier used for transmission using a MultiTone Power Ratio (MTPR) test as

IPR2025-00395
Petitioners' Exhibit 1011
Page 79 of 256

shown in Figure 7-21.

Over the transmission frequency band, the MTPR of the transmitter in any subcarrier shall be no less than $(3N_{upi} + 20)$ dB, where N_{upi} is defined as the size of the constellation (in bits) to be used on subcarrier i. The transmitter MTPR shall be +38 dB (corresponding to an N_{upi} of 6) for any subcarrier.

NOTE – Signals transmitted during normal initialization and data transmission cannot be used for this test because the DMT symbols have a cyclic prefix appended, and the PSD of a non-repetitive signal does not have nulls at any subcarrier frequencies. A gated FFT-based analyser could be used, but this would measure both the non-linear distortion and the linear distortion introduced by the transmit filter. Therefore this test will require that the transmitter be programmed with special software, probably to be used during development only. The subject of an MTPR test that can be applied to a production modem is for further study.

8.14 ATU-R Upstream Transmitter spectral response

Spectral masks for the three service options are defined in Annexes A, B, and C:

For Annex A, see A.2.4.

For Annex B, see B.2.2.

For Annex C, see C.5.6.

NOTE – The band from 25 to 276 kHz that is referred to is the union of the bands used for ADSL above POTS and ADSL above ISDN. Limits defined within this band apply also to any narrower bands used.

8.15 Dual Bitmapping and Rate Conversion (Annex C only)

For Annex C, see C.5.2.

8.16 FEXT Bitmapping (Annex C only)

For Annex C, see C.5.3.

9 EOC Operations and Maintenance

9.1 Clear EOC

Support of autonomous data messages is mandatory. It provides the physical layer channel defined in 6.1/G.997.1. The channel is provided in both the upstream and the downstream direction by transmission of autonomous messages with EOC field settings as shown in 9.2.3.4.

These autonomous data messages may be transmitted from either the ATU-C or the ATU-R and are transparent to the current state of the EOC state machine. That is, these autonomous messages transporting clear channel data can be inserted regardless of the current state of the EOC state machine. There is no requirement that these autonomous messages be inserted contiguously. That is other EOC messages may be inserted between any two autonomous messages. There is also no requirement for any specific rate of insertion of autonomous messages into the EOC.

When an autonomous data message is received, the byte payload is placed in a buffer on the receiving ATU. Assembly into PDUs is defined in Recommendation G.997.1.

The clear EOC does not support flow control. It is assumed that a higher level protocol implemented over this data path will support a flow control mechanism if required. Additionally, any system implementing a stack and application using the clear EOC (such as that defined in Recommendation G.997.1) should disable, at the higher layers, the further sending of autonomous data frames should a significant number of these higher layer messages be left without response from the receiver.

IPR2025-00395
Petitioners' Exhibit 1011
Page 80 of 256

9.2 Embedded operations channel (EOC) requirements

An embedded operations channel for communication between the ATU-C and ATU-R shall be used for in-service and out-of-service maintenance and for the retrieval of ATU-R status information and ADSL performance monitoring parameters.

9.2.1 EOC organization and protocol

The ADSL EOC allows the ATU-C (acting as master of the link) to invoke commands and the ATU-R (acting as slave) to respond to the commands. The ATU-C determines the EOC rate of the ADSL link; therefore only one EOC message shall be inserted in the upstream direction (by the ATU-R) for each received EOC message. One exception to this is for the "dying gasp" message, which is the only autonomous message currently allowed from the ATU-R and is inserted as soon as appropriate bytes are available.

This subclause defines only the content and meaning of the EOC messages; their insertion into the data frames is defined in 7.4.1 and 8.4.1.

9.2.2 EOC message structure

The 13 bits of an EOC message are partitioned among five fields, which are summarized in Table 9-1 and defined in the following subclauses. The EOC protocol states are defined in 9.2.5.

Table 9-1/G.992.1 – EOC message fields

Field #	Bit(s)	Description	Notes
1	1, 2	Address field	Can address 4 locations
2	3	Data (0) or opcode (1) field	Data used for read/write or when an autonomous data message is sent
3	4	Byte parity field Odd (1) or even (0)	Byte order indication for multi-byte transmission
4	5	Autonomous message field: ATU-C • set to "1" for ATU-C commands sent to ATU-R • set to "0" for autonomous transfers ATU-R • set to "1" for response to ATU-C command • set to "0" for autonomous transfers	Set to "0" by ATU-R to send dying gasp message or autonomous data transfers
5	6-13	Information field	One out of 58 opcodes or 8 bits of data

9.2.2.1 Address field (# 1)

The two bits of the address field can address up to four locations. Only two locations are presently defined:

- 11_2: ATU-C address;
- 00_2: ATU-R address.

10_2 and 01_2 are reserved for future use, and are presently invalid.

The ATU-C shall address messages to the ATU-R by setting the ADDRESS field equal to the ATU-R address. When responding to a message from the ATU-C, the ATU-R shall keep the ADDRESS field equal to its own ATU-R address. Only when sending an autonomous message to

IPR2025-00395
Petitioners' Exhibit 1011
Page 81 of 256

the ATU-C shall the ATU-R set the ADDRESS field equal to the ATU-C address.

9.2.2.2 Data or opcode field (# 2)

A 0 (zero) in this field indicates that the information field of the current EOC message contains a data byte; a 1 that it contains an operation code for an ADSL EOC message.

9.2.2.3 Byte parity field (# 3)

For the first byte of data that is to be either read or written, this bit shall be set to "1" to indicate "odd" byte. For the next byte, it shall be set to "0" to indicate "even" byte and so on, alternately. This bit helps to speed up multi-byte reads and writes of data by eliminating the need for intermediate opcodes to indicate to the far-end that the previous byte was successfully received.

The byte parity field shall always be set to "1" if the EOC message is an autonomous message or if the information field carries an opcode different from the Next Byte opcode. The byte parity field may be set to "0" otherwise.

9.2.2.4 Autonomous message field (# 4)

At the ATU-C a 1 in this field designates that the current EOC message is an EOC protocol command (master) message; a 0 designates that this is an autonomous transfer that does not disrupt the current EOC protocol state at either the ATU-C or ATU-R. At the ATU-R a 1 in this field designates that the current EOC message is an EOC protocol response (slave) message; a 0 designates that it is an autonomous transfer that does not disturb the current EOC protocol state at either the ATU-C or the ATU-R. The only autonomous transfer currently defined for the ATU-C is the autonomous data transfer defined in 9.2.3.4. The ATU-R supports the "dying gasp" (see 9.2.5.4) message and upstream autonomous data transfers (defined in 9.2.3.4).

9.2.2.5 Information field (# 5)

Up to 58 different opcodes or 8 bits of (binary or ASCII) data may be encoded in the information field.

The opcode set is restricted to codes that provide a minimum Hamming distance of 2 between all opcodes, and a minimum distance of 3 between certain critical codes and all other codes.

9.2.3 EOC message sets

The ATU-C sends EOC (command) messages to the ATU-R to perform certain functions. Some of these functions require the ATU-R to activate changes in the circuitry (e.g. to send CRC bits that are corrupted). Other functions that can be invoked are to read from and write into data registers located at the ATU-R. The data registers are used for reading status- or performance-monitoring parameters from the ATU-R, or for limited maintenance extensions to the CI wiring distribution network or service modules.

Some of these commands are "latching", meaning that a subsequent command shall be required to release the ATU-R from that state. Thus, multiple ADSL EOC-initiated actions can be in effect simultaneously. A separate command, "Return To Normal", is used to unlatch all latched states. This command is also used to bring the ADSL system to a known state, the idle state, when no commands are active in the ATU-R location. To maintain the latched state, the command "Hold State" shall be sent to bring the ADSL system to a known state, the Idle State.

The ATU-C always issues the EOC messages, and the ATU-R acknowledges that it has received a message correctly by echoing it, or by sending a response message.

There are four types of EOC messages:

- bidirectional EOC messages: these are sent by the ATU-C, must be echoed by the ATU-R as an indication of correct reception and require an opcode;

IPR2025-00395
Petitioners' Exhibit 1011
Page 82 of 256

- ATU-C to ATU-R (downstream) messages: these are sent by the ATU-C, are not echoed by the ATU-R and require an opcode;
- ATU-R to ATU-C (upstream) messages: these are sent by the ATU-R, are not echoed by the ATU-C and require an opcode; these are EOC protocol responses to downstream commands or an autonomous message such as "dying gasp"(i.e. unsolicited);
- Autonomous Data Transfers: these are autonomous data transfers sent by either the ATU-C or ATU-R, they are unsolicited, are not echoed or acknowledged at the EOC layer, do not use an opcode and do not affect the EOC protocol state.

All the EOC messages and their opcodes are summarized in Table 9-2.

Table 9-2/G.992.1 – EOC message opcodes

HEX (Note 1)	Opcode meaning	Direction (Note 2)	Abbreviation and notes
01_{16}	Hold state	d/u	HOLD
$F0_{16}$	Return all active conditions to normal	d/u	RTN
02_{16}	Perform "self test"	d/u	SLFTST
04_{16}	Unable to comply (UTC)	u	UTC
07_{16}	Request corrupt CRC	d/u	REQCOR (latching)
08_{16}	Request end of corrupt CRC	d/u	REQEND
$0B_{16}$	Notify corrupt CRC	d/u	NOTCOR (latching)
$0D_{16}$	Notify end of corrupt CRC	d/u	NOTEND
$0E_{16}$	End of data	d/u	EOD
10_{16}	Next byte	d	NEXT
13_{16}	Request update of test parameters	d/u	REQTPU
20_{16}, 23_{16}, 25_{16}, 26_{16}, 29_{16}, $2A_{16}$, $2C_{16}$, $2F_{16}$, 31_{16}, 32_{16}, 34_{16}, 37_{16}, 38_{16}, $3B_{16}$, $3D_{16}$, $3E_{16}$	Write data register numbers 0-F	d/u	WRITE
40_{16}, 43_{16}, 45_{16}, 46_{16}, 49_{16}, $4A_{16}$, $4C_{16}$, $4F_{16}$, 51_{16}, 52_{16}, 54_{16}, 57_{16}, 58_{16}, $5B_{16}$, $5D_{16}$, $5E_{16}$	Read data register numbers 0-F	d/u	READ
19_{16}, $1A_{16}$, $1C_{16}$, $1F_{16}$	Vendor proprietary protocols	d/u	
$E7_{16}$	Dying gasp	u	DGASP

IPR2025-00395
Petitioners' Exhibit 1011
Page 83 of 256

Table 9-2/G.992.1 – EOC message opcodes *(concluded)*

HEX (Note 1)	Opcode meaning	Direction (Note 2)	Abbreviation and notes
15_{16}, 16_{16}, 80_{16}, 83_{16}, 85_{16}, 86_{16}, 89_{16}, $8A_{16}$, $8C_{16}$, $8F_{16}$	Undefined codes		These codes are reserved for future use and shall not be used for any purpose

NOTE 1 – The opcode values are given in HEX (MSB left, LSB right) with the MSB mapping to bit eoc13 and the LSB to bit eoc6 (see Table 9-1). The values guarantee a minimum Hamming distance of:

- 2 between all opcodes (by requiring odd parity for all but two critical codes);
- 3 between the "Return to Normal" (or "idle") code and all other codes; and
- 3 between the "Dying Gasp" code and all other codes.

NOTE 2 – The three types of messages are identified as:

- d/u (downstream/upstream) bidirectional messages (9.2.3.1);
- d (downstream): ATU-C to ATU-R messages (9.2.3.2);
- u (upstream): ATU-R to ATU-C messages (9.2.3.3).

9.2.3.1 Bidirectional EOC messages

Messages that may *be* sent by the ATU-C, and echoed by the ATU-R as an indication of correct reception are as follows (with their abbreviated names and hex opcodes in parentheses):

- *Hold State*: (HOLD, 01_{16}) This message tells the ATU-R to maintain the ATU-R EOC processor and any active ADSL EOC-controlled operations (such as latching commands) in their present state.
- *Return to Normal (Idle Code)*: (RTN, $F0_{16}$) This message releases all outstanding EOC-controlled operations (latched conditions) at the ATU-R and returns the ADSL EOC processor to its initial state. This code is also the message sent during idle states.
- *Request Corrupt CRC*: (REQCOR , 07_{16}) This message requests the ATU-R to send corrupt CRCs to the ATU-C until cancelled by the "Request End of Corrupt CRC" or "Return to Normal" message. In order to allow multiple ADSL EOC-initiated actions to be in effect simultaneously, the "Request corrupt CRC" command shall be latching.
- *Request End of Corrupt CRC*: (REQEND, 08_{16}) This message requests the ATU-R to stop sending corrupt CRCs toward the ATU-C.
- *Notify Corrupted CRC*: (NOTCOR, $0B_{16}$) This message notifies the ATU-R that intentionally corrupted CRCs will be sent from the ATU-C until cancellation is indicated by "Notify End of Corrupted CRC" or "Return to Normal".
- *Notify End of Corrupted CRC*: (NOTEND, $0D_{16}$) This message notifies the ATU-R that the ATU-C has stopped sending corrupted CRCs.
- *Perform Self Test*: (SLFTST, 02_{16}) This message requests the ATU-R to perform a self test. The result of the self test shall be stored in a register at the ATU-R. After the ATU-R self test, the ATU-C reads the test results from the ATU-R register.
- *Receive/Write Data (Register #)*: (WRITE, see Table 9-2) This message directs the ATU-R to enter the Data Write Protocol state, receive data, and write it in the register specified by the Opcode.

IPR2025-00395
Petitioners' Exhibit 1011
Page 84 of 256

- *Read/Send Data (Register #)*: (READ, see Table 9-2) This message directs the ATU-R to enter the Data Read Protocol state, read data from the register specified by the Opcode, and transmit it to the ATU-C.
- *End of Data*: (EOD, $0E_{16}$) This message is sent by the ATU-C after it has sent all bytes of data to the ATU-R (see Note).
- *Request Test Parameter Update*: (REQTPU, 13_{16}): This message requests the ATU-R to update the test parameter set as defined in 9.3.1.4 and 9.3.4.1. Test parameters shall be supported by the ATU-R and shall be updated within 10 seconds after the request is received. Updated test parameters may be read by the ATU-C thereafter.
- *Vendor Proprietary Opcodes*: (VPC, 19_{16}, $1A_{16}$, $1C_{16}$, $1F_{16}$) Four opcodes have been reserved for vendor proprietary use. The ATU-C shall read the Vendor ID (identification) code register of the ATU-R to ensure compatibility between ATUs before using proprietary opcodes.
- *Undefined Command Codes*: All command codes not defined are reserved for future use, and shall not be used for any purpose.

NOTE – This message has a slightly different meaning when sent by the ATU-R, as defined in 9.2.5.3.2.

9.2.3.2 ATU-C to ATU-R messages

One message that may be sent only by the ATU-C is:

- *Next Byte*: (NEXT, 10_{16}) This message is sent repeatedly by the ATU-C (toggling bit four for multi-byte data until all data has been sent) while it is in Data Read Protocol state (i.e. after the ATU-R has acknowledged the previously sent *Receive/Write Data* command).

9.2.3.3 ATU-R to ATU-C messages

Additional messages that may be sent only by the ATU-R are:

- *Unable to Comply Acknowledgement*: (UTC, 04_{16}) The ATU-R shall send this message when it receives an ADSL EOC message that it cannot perform, either because it does not recognize or implement the command or because the command is unexpected, given the current state of the ADSL EOC interface. An example of an unexpected command is one that indicates that the information field contains data, but that was not preceded by a "Write Data" command.
- *End of Data*: (EOD, $0E_{16}$) This message is sent by the ATU-R:
  - in response to a "Next Byte" message from the ATU-C that is received after all bytes have been read from the currently addressed ATU-R register; or
  - in response to a message from the ATU-C that contains a data byte after all bytes have been written to the currently addressed ATU-R register.
- *Dying gasp*: (DGASP, $E7_{16}$) This is the only autonomous (i.e. unsolicited) message that the ATU-R may send; see 9.2.5.4.
- *Vendor Proprietary Opcodes*: (VPC, 19_{16}, $1A_{16}$, $1C_{16}$, $1F_{16}$) Four opcodes have been reserved for vendor proprietary use.

9.2.3.4 Autonomous Data Transfers

Autonomous Data Transfers are unsolicited data transfers that can be initiated by either the ATU-C or ATU-R. Unlike normal EOC protocol messages, autonomous data transfers require no echoing (acknowledgements) at the EOC layer nor repetition. This light weight approach to data transfers enables high speed, unsolicited management exchanges ($32 \times 8 \times 4/68 = 15$ kbit/s) between the ATU-C and ATU-R without impacting the current EOC protocol states.

IPR2025-00395
Petitioners' Exhibit 1011
Page 85 of 256

Autonomous Data Transfers can be inserted regardless of the state of the EOC state machine. An Autonomous Data Transfer will not change the EOC message/echo-response protocol state nor can it count as a response to any ATU-C protocol message. An Autonomous Data Transfer allows for the transport of a single byte of data and does not require the repetitive EOC message/echo-response protocol. Consecutive Autonomous Data Transfers can be issued as soon as "fast" byte pairs are available for EOC messages. The flow of Autonomous Data Transfers can be interrupted at any time for bidirectional, ATU-C to ATU-R or ATU-R to ATU-C EOC messages. The ATU-C shall format all Autonomous Data Transfers (to the ATU-R) with the Address field (#1) set to 00_2 (ATU-R's address); the Data field (#2) set to 0 (data); the Byte parity field (#3) set to 1; the Autonomous message field (#4) shall be set to 0 (autonomous); and the information field (#5) will be used for 8 bits of data. The ATU-R shall format all Autonomous Data Transfers (to the ATU-C) with the Address field (#1) set to 11_2 (ATU-C's address); the Data field (#2) set to 0 (data); the Byte parity field (#3) set to 1; the Autonomous message field (#4) shall be set to 0 (autonomous); and the information field (#5) will be used for 8 bits of data.

9.2.4 Data registers in the ATU-R

The ATU-R registers shall be defined as:

- ATU-R Vendor ID: 8 bytes (see 9.3.3/G.994.1);
- ATU-R Revision Number: vendor discretionary;
- ATU-R Serial number (32 bytes): The format of the ATU-R Serial Number is vendor discretionary;
- Self Test Results: The most significant byte of the Self Test Results shall be 00_{16} if the self test passed, and 01_{16} if it failed (the meaning of "failure" is vendor discretionary); other values are reserved for future use. The length and syntax of the remainder are vendor discretionary;
- Line attenuation (1 byte): The line attenuation is defined in 9.5.1;
- SNR Margin (1 byte): The SNR margin is defined in 9.5.1;
- ATU-R configuration (30 bytes): The ATU-R configuration data, as defined in 8.4 and Table 10-9, shall be read (one byte for each variable) in the following order:
  - downstream B_F(AS0), B_I(AS0), B_F(AS1), B_I(AS1), B_F(AS2), B_I(AS2), B_F(AS3), B_I(AS3);
  - downstream B_F(LS0), B_I(LS0), B_F(LS1), B_I(LS1), B_F(LS2), B_I(LS2), reserved;
  - upstream B_F(LS0), B_I(LS0), B_F(LS1), B_I(LS1), B_F(LS2), B_I(LS2), reserved;
  - downstream RS_F, RS_I, S, D ($RS_F = R_F$, $RS_I = R_I/S$);
  - upstream RS_F, RS_I, S, D ($RS_F = R_F$, $RS_I = R_I/S$).

Both reserved bytes shall be set to 00_{16}.

Table 9-3 summarizes the ATU-R data registers and their applications.

IPR2025-00395
Petitioners' Exhibit 1011
Page 86 of 256

Table 9-3/G.992.1 – ATU-R data registers

Reg. #	Use	Length	Description
0_{16}	Read (R)	8 bytes (see 9.3.3/G.994.1)	ATU-R vendor ID
1_{16}	R	Vendor discretionary	ATU-R version number minus one
2_{16}	R	32 bytes	ATU-R serial #
3_{16}	R	Vendor discretionary	Self test results
4_{16}	Read/Write (R/W)	Vendor discretionary	Vendor discretionary
5_{16}	R/W	Vendor discretionary	Vendor discretionary
6_{16}	R	1 byte	Line attenuation
7_{16}	R	1 byte	SNR margin
8_{16}	R	30 bytes	ATU-R Configuration (see 8.4 and Note 1)
9_{16}-F_{16}	Reserved	Reserved	(Note 2)
NOTE 1 – Registers shall be read most significant byte first. NOTE 2 – Registers 9 through F are reserved for future use; ATU-R shall respond UTC (unable to comply) if requested to read from or write to one of these registers.			

9.2.5 EOC protocol states

The ADSL EOC protocol operates in a repetitive command and response mode. The ATU-C acts as the master and issues command messages; the ATU-R acts as slave and responds to the messages issued by the ATU-C. Three identical properly-addressed consecutive (i.e. no other EOC messages are received in between) messages shall be received before an action is initiated (both at ATU-C and ATU-R). Only one command and only three or fewer messages, under the control of the ATU-C, shall be outstanding (i.e. unacknowledged) at any one time.

NOTE – This restriction on the number of messages guarantees that an ATU-R with fewer opportunities to insert EOC frames into the upstream path will be able to acknowledge all EOC messages from the ATU-C.

The procedure for dealing with outstanding messages at the ATU-C is shown in Figure 9-1. Only when it has no outstanding messages may the ATU-C send a message different from the previous message sent; this will then result in one outstanding message. When one or two messages are outstanding, the ATU-C may only repeat the previous message sent; thereby ensuring that all outstanding messages will be identical.

IPR2025-00395
Petitioners' Exhibit 1011
Page 87 of 256

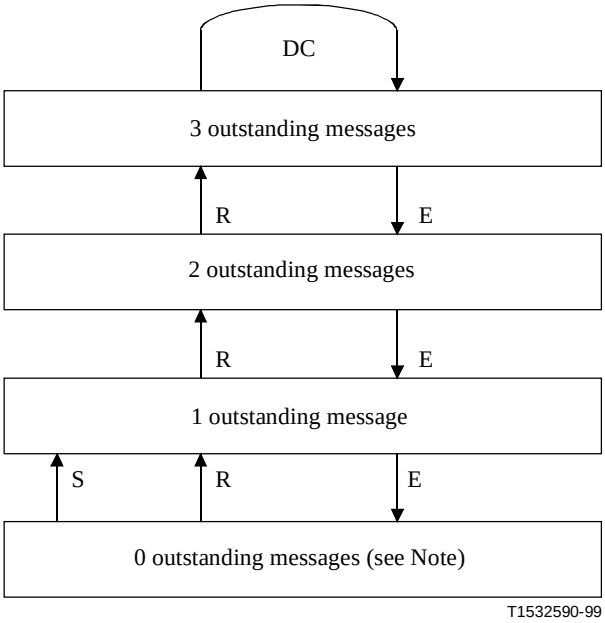

S = Send new message
R = Repeat last message
E = EOC message received
DC = Dummy code

NOTE – Immediately after initialization, the ATU-C shall have no outstanding messages.

Figure 9-1/G.992.1 – ATU-C state diagram for outstanding EOC messages

For E, R and S all the EOC messages with bit 5 set to "1" shall be considered. Other EOC messages shall not cause a change of state in the EOC state machine.

Whenever there are three outstanding messages, the ATU-C shall stop sending messages and stuff the available EOC bandwidth with dummy synchronization control bytes (see 7.4.1.1). Sending messages may be resumed after receiving one or more acknowledgements (echoes) from the ATU-R. Only one command shall be outstanding at any time. Therefore, all outstanding messages shall be identical. To deal with messages that are not echoed by the ATU-R (e.g. those that are erased from the line due to impulse noise and will therefore remain outstanding), the ATU-C shall implement an adequate error recovery mechanism. This mechanism does not affect interoperability and is therefore outside the scope of this Recommendation.

The EOC protocol state diagrams of the ATU-R and ATU-C shall be as shown in Figures 9-2 and 9-3, respectively.

IPR2025-00395
Petitioners' Exhibit 1011
Page 88 of 256

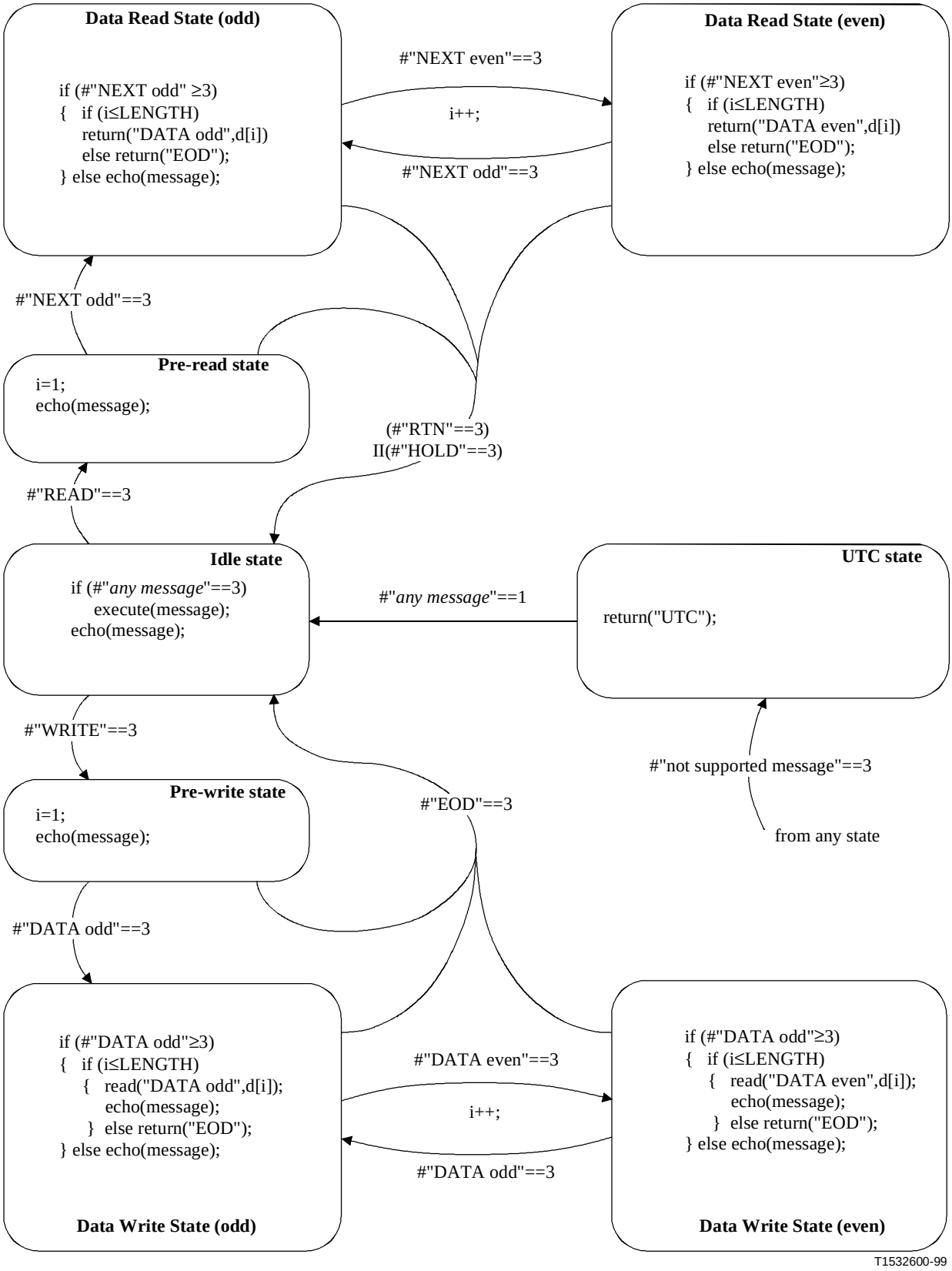

Figure 9-2/G.992.1 – EOC receiver state machine at ATU-R

IPR2025-00395
Petitioners' Exhibit 1011
Page 89 of 256

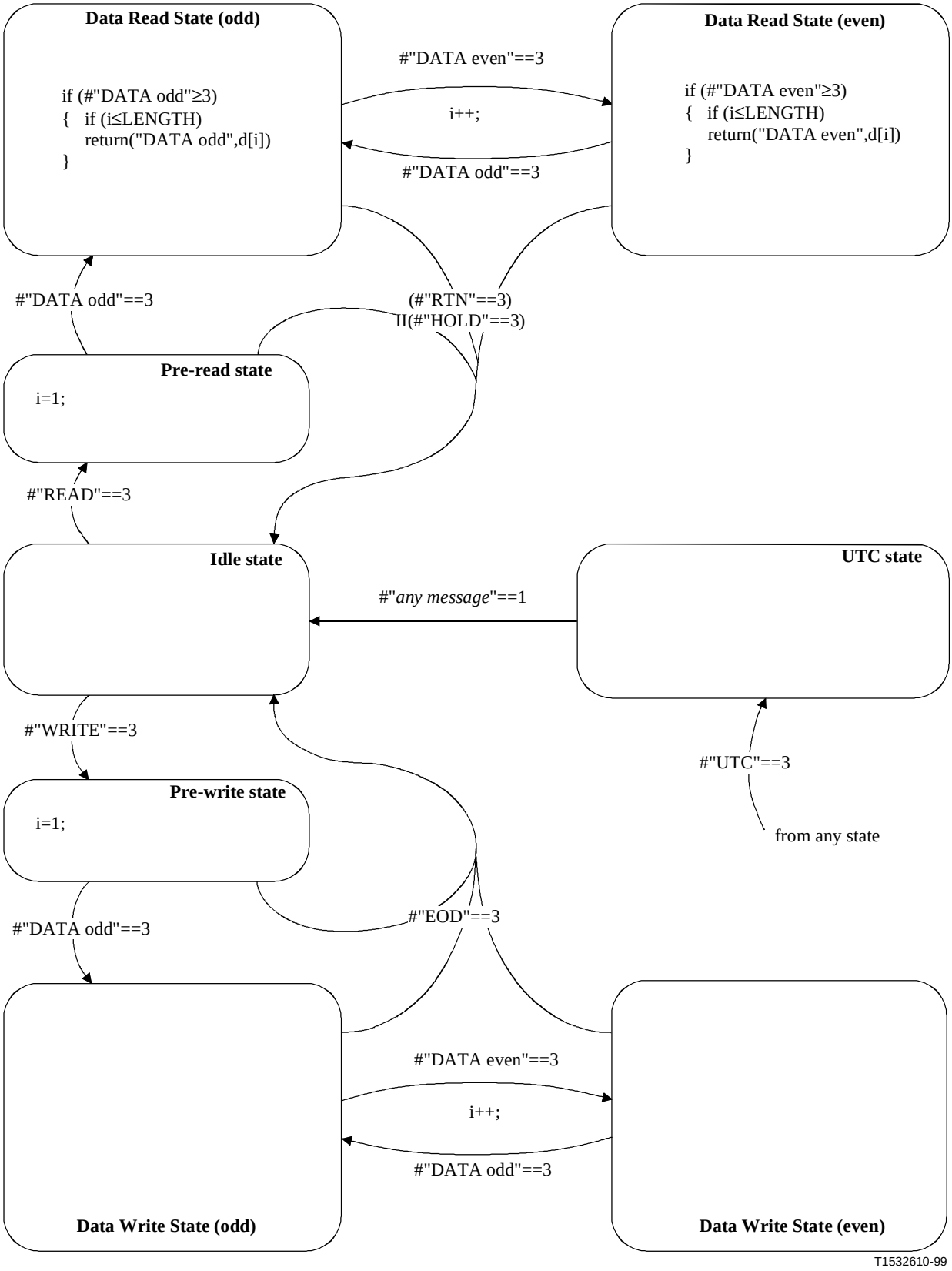

Figure 9-3/G.992.1 – EOC receiver state machine at ATU-C

IPR2025-00395
Petitioners' Exhibit 1011
Page 90 of 256

The following shall govern state changes as shown in Figures 9-2 and 9-3:

1) The protocol state changes are performed based on received messages. At ATU-C, received messages are responses from the ATU-R to messages sent from the ATU-C. Depending on the ATU-C receiver protocol state, the ATU-C transmitter message set may be restricted. It is left up to the ATU-C transmitter to organize and send a sequence of messages such that the right response from the ATU-R is achieved based on the receiver protocol state machines.

2) *(#"message"==N)* is true if and only if the previously received N messages are identical (i.e. all 13 bits equal) and properly addressed (i.e. having ATU-R address). *(#"message"==1)* means the most recently received message is different (in at least 1 out of 13 bits) from the immediately preceding message and is properly addressed.

3) Moving to another state (based on the message received) shall be considered first, then the (same or new) state shall be executed. At the ATU-R execution of commands in the Idle state shall be as described in 9.2.5.3 (invoking latching, unlatching or self test).

4) All the EOC messages with bit 5 set to "1" shall be considered as received messages and cause an EOC response message at the ATU-R. Other EOC messages shall not cause a change of state in the EOC state machine and shall not cause an EOC response message at the ATU-R.

The responses allowed from the ATU-R fall into three categories:

- message/echo-response protocol states: Idle State and EXE State;
- message/unable-to-Comply-response protocol state: UTC State;
- message/data-response protocol states: Data Read States and Data Write States (Data Read States includes Pre-Read, Data Read odd and Data Read even states) (Data Write State includes Pre-Write, Data Write odd and Data Write even states).

In addition to these states, one autonomous message shall be allowed from the ATU-R to the ATU-C to indicate "dying gasp". This message does not change the protocol state, nor does it count as a response to any ATU-C message; however, other actions (e.g. an automatic reset at the ATU-C) taken as a result of receiving this message may lead to a change of state (e.g. back to Idle State).

The EOC protocol shall enter the Message/Echo-response protocol state (Idle state) when the ATUs transition from the initialization and training sequence to steady state transmission. In order to cause the desired action in the ATU-R, the ATU-C shall repeat the message (without exceeding the limit of outstanding messages) until it receives three identical consecutive EOC message echoes from the ATU-R. This completes the command and response protocol, but the ATU-C may continue to send the same message thereafter. The command and response protocol for that message must be completed before a new message (containing a new command), which may induce a different protocol state in the ATU-R, may be issued.

At the ATU-R, depending on the state it is in, various restricted sets of EOC messages shall be acceptable. These sets shall be as shown in Table 9-4. Reception of other, inapplicable, messages shall result in an Unable-to-Comply (UTC) response to the ATU-C.

IPR2025-00395
Petitioners' Exhibit 1011
Page 91 of 256

Table 9-4/G.992.1 – EOC messages acceptable at the ATU-R

ATU-R state	EOC messages acceptable at the ATU-R			
Idle	all messages acceptable			
UTC	all messages acceptable			
Data pre-read	Read	NEXT odd	RTN	HOLD
Data read odd, even	NEXT odd	NEXT even	RTN	HOLD
Data pre-write	WRITE	DATA odd	EOD	
Data write odd, even	DATA odd	DATA even	EOD	

9.2.5.1 Message/echo-response protocol state

This state is identical to the Idle state shown in Figures 9-2 and 9-3.

To initiate an action at the ATU-R, the ATU-C shall begin sending EOC messages with the Data/opcode set to "1" and with the appropriate message opcode in the information field.

The ATU-R shall initiate action when, and only when, three identical, consecutive, and properly addressed EOC frames that contain a message recognized by the ATU-R have been received. The ATU-R shall respond to all received messages. The response shall be an echo of the received ADSL EOC message. The combination of the ATU-C sending an ADSL EOC frame and the ATU-R echoing the frame back comprises the message/echo-response protocol state.

For the ATU-C to confirm correct reception of the message by the ATU-R, the message/echo-response ADSL EOC protocol state is repeated until the master node receives three identical and consecutive echoes. This serves as an implicit acknowledgement to the ATU-C that the ATU-R has correctly received the transmitted message and is acting on it. This completes the message/echo-response protocol mode.

Because EOC frames are inserted into ADSL frames only when the appropriate byte is available, the amount of time it takes to complete a message under error-free conditions will depend on the vendor's synchronization control algorithm, on the number of signals allocated to the fast buffer, and on the rates of those signals.

The ATU-C continuously sends the activating message after the receipt of the three valid echoes, or alternatively, it may switch to sending the "Hold State" message. If the message was one of the latching commands, then the ATU-R shall maintain the commanded condition until the ATU-C issues the appropriate command that ends the specific latched condition or until the ATU-C issues the "Return to Normal" command (at which time all latched conditions in the ATU-R must be terminated).

9.2.5.2 Message/unable-to-comply response protocol state

When the ATU-R does not support a message that it has received three times identically and consecutively, it shall respond with the Unable-To-Comply (UTC) ADSL EOC response message with its own address in lieu of a third identical and consecutive echo. In this manner, the ATU-R will switch to the message/UTC-response protocol state.

The transmission by the ATU-R and reception by the ATU-C of three identical, consecutive, properly-addressed Unable-To-Comply messages constitutes notification to the ATU-C that the ATU-R does not support the requested function, at which time the ATU-C may abandon its attempt.

9.2.5.3 Message/data-response protocol state

The ATU-C may either write data into, or read data from the ATU-R memory.

IPR2025-00395
Petitioners' Exhibit 1011
Page 92 of 256

9.2.5.3.1 Data read protocol

To read data from the ATU-R, the ATU-C shall send an appropriate read opcode message to the ATU-R that specifies the register to be read. After receiving at least three identical and consecutive acknowledgements, the ATU-C shall request the first byte to be sent from the ATU-R by sending "Next Byte" messages with bit four set to "1", indicating a request for an "odd" byte. The ATU-R shall respond to these "Next Byte" messages by echoing them until it has received three such messages consecutively, identically and properly addressed. Beginning with the third such reception, the ATU-R shall respond by sending the first byte of the register in the information field of an ADSL EOC frame with bit four set to "1" to indicate "odd byte" and with bit 3 set to "0" to indicate that the EOC frame is a data frame (as opposed to a frame that contains an opcode in the information field). The ATU-C continues to send the "Next Byte" message with bit four set to "odd byte", and the ATU-R continues to respond with a data frame containing the first byte of data and bit four equal to "odd byte", until the ATU-C has received at least three consecutive, identical and properly addressed data frames with bit four set to "odd byte".

If there are more data to be read, the ATU-C shall request the second byte of data by sending "Next Byte" messages with bit four set to "0" ("even byte"). The ATU-R echoes all messages received until three such "Next Byte" messages have been received, and on the third consecutive, identical and properly addressed "Next Byte" message, the ATU-R starts sending data frames containing the second byte of the register with bit four set to "even byte". The ATU-C continues to send the "Next Byte" message with bit four set to "even byte", and the ATU-R continues to respond with a data frame containing the second byte of data and bit four set to "even byte".

The process continues for the third and all subsequent bytes with the value of bit four toggling from "odd byte" to "even byte" or vice versa, on each succeeding byte. Each time bit four is toggled, the ATU-R echoes for two correct frames, and starts sending the data frame on the third reception. The process ends only when all data in the register has been read.

To continue reading data, once the ATU-R is in the Data Read odd or even State, the only message that the ATU-C is allowed to send is the "Next Byte" message with bit four toggling. To end the data read mode abnormally, the ATU-C sends either "Hold State" or "Return to Normal", depending on whether any latched states are to be retained. If the ATU-R receives any other message three times consecutively, identically and properly addressed while it is in Data Read odd or even State, it shall go into the UTC State.

If, after all bytes have been read from the ATU-R register, the ATU-C continues to send the "Next Byte" message with bit four toggled, then the ATU-R shall send an "End of Data" message (with bit three set to "1" indicating opcode) beginning with the third such reception.

For the ATU-C, the data read mode ends either when the ATU-C has received the last requested data byte three times consecutively, identically and properly addressed, or when the ATU-C has received three consecutive, identical and properly addressed "End of Data" messages with bit three set to "1". The ATU-C shall then switch itself and the ATU-R over to the Idle State with the "Hold State" or "Return to Normal" message, and the ATU-R shall release the register and leaves the Data Read State after receiving three identical, consecutive and properly addressed "Hold State" or "Return to Normal" messages.

9.2.5.3.2 Data write protocol

To write data to the ATU-R's memory, the ATU-C shall send a "Write Data" opcode message to the ATU-R that specifies the register to be written. When the ATU-R acknowledges with three consecutive, identical and properly addressed echo messages, the ATU-C sends the first byte of data. The ATU-R shall acknowledge the receipt of the byte with an echo of the message. After the ATU-C is satisfied with three identical, consecutive and properly addressed echo responses, it shall start sending the next byte of data. Each time the ATU-C receives at least three identical and consecutive correct data echo responses, it shall switch to sending the next byte of data. It shall also toggle the

IPR2025-00395
Petitioners' Exhibit 1011
Page 93 of 256

"odd/even" bit accordingly. ("Next Byte" messages are not used in the Data Write mode.) The ATU-C shall end the write mode with the "End of Data" message indicating to the ATU-R to release the register and return to the Idle State.

To continue writing data, once the ATU-R is in the Data Write odd or even state, the only message that the ATU-C is allowed to send is the "DATA Byte" message with bit 3 set to "0" and with bit four toggling or, to end the Data Write state abnormally, the ATU-C may switch to the "EOD" message. If the ATU-R receives any other message three times consecutively, identically and properly addressed while it is in Data Write state, it shall go into the UTC state.

If, after all bytes have been written to the ATU-R register, the ATU-C continues to send a next byte of data, then the ATU-R shall send an "End of Data" message (with bit three set to "1" indicating opcode), beginning with the third such reception.

9.2.5.4 "Dying gasp"

The ATU-R shall have the ability to detect when the electrical power has been shut off. After such detection of a near-end Loss-of-Power (LPR) condition (see 9.3.4.1), the ATU-R shall insert priority EOC messages into the ADSL upstream data to implement a "dying gasp" as an LPR indicator. The "dying gasp" EOC message shall have bit 5 set to "0" to indicate autonomous message, bit 3 set to "1" to indicate opcode, and shall contain the "dying gasp" opcode (see Table 9-2) in the information field.

At least six contiguous dying gasp EOC messages shall be inserted in the next (at least twelve) available ADSL upstream bytes available for EOC (see 8.4.1) beginning with an even-numbered frame, regardless of the number of EOC frames received in the downstream channel.

The ATU-C shall not send a response to a "dying gasp" message back to the ATU-R. An LPR indicator is present at the ATU-C if at least 4 "dying gasp" messages are received within the last twelve contiguous upstream bytes available for EOC, beginning with the an even-numbered frame (see Loss-of-Power primitive definition in 9.3.4). Sending the "dying gasp" shall not cause the ATU-R to change the EOC protocol state, nor shall receiving it cause the ATU-C to immediately change state.

9.3 In-service performance monitoring and surveillance

ADSL systems have been designed to deliver packet-/cell-based payloads. However, when ADSL systems operate in the STM mode non-cell based data paths may be transported. The performance monitoring capabilities required to maintain those data paths are embedded within the packet/cell systems. The ADSL system shall support the data path monitoring requirements as required by the specific payload technology (Figure 9-4).

IPR2025-00395
Petitioners' Exhibit 1011
Page 94 of 256

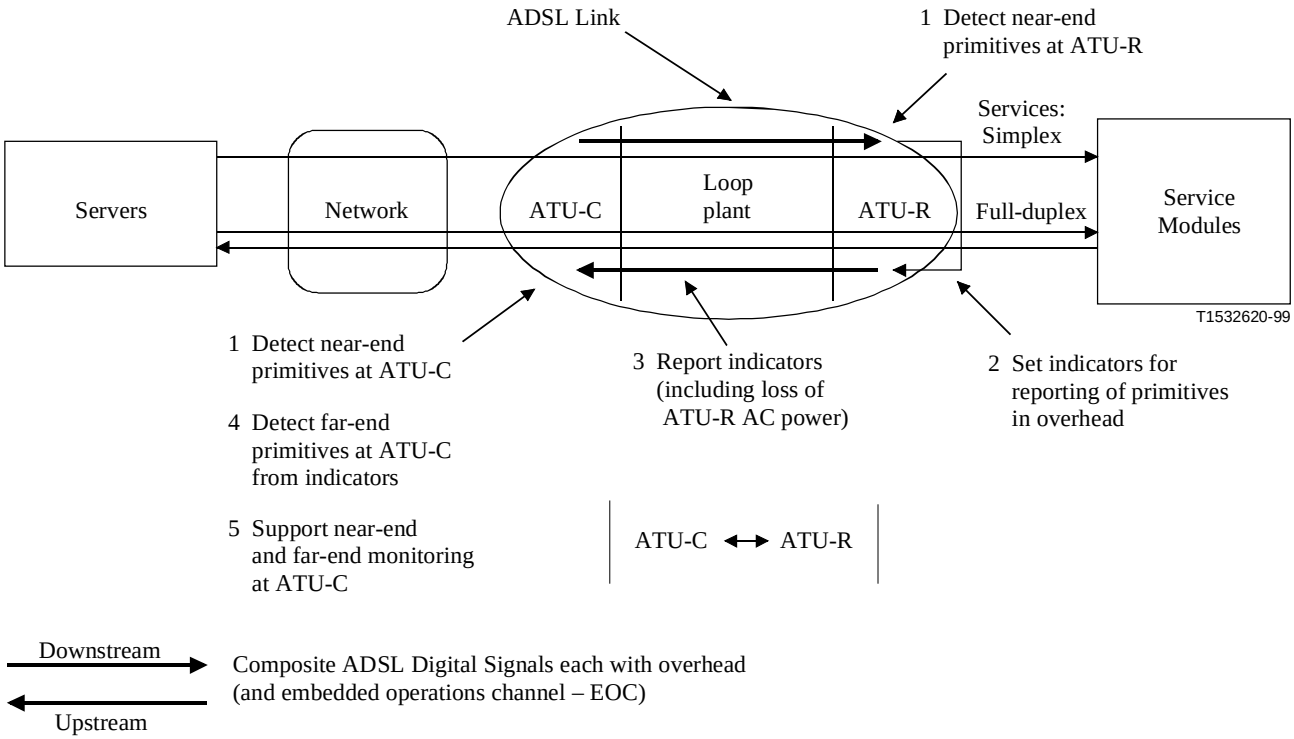

Figure 9-4/G.992.1 – In-service surveillance of the ADSL link shown from standpoint of ATU-C

9.3.1 ADSL line related primitives

9.3.1.1 ADSL line related near-end anomalies

Four near-end anomalies are defined:

- **Forward error correction interleaved (FEC-I) anomaly**: An FEC-I anomaly occurs when a received FEC code for the interleaved data stream indicates that errors have been corrected.
- **Forward error correction fast (FEC-F) anomaly**: An FEC-F anomaly occurs when a received FEC code for the fast data stream indicates that errors have been corrected.
- **Cyclic redundancy check interleaved (CRC-I) anomaly**: A CRC-I anomaly occurs when a received CRC-8 code for the interleaved data stream is not identical to the corresponding locally generated code.
- **Cyclic redundancy check fast (CRC-F) anomaly**: A CRC-F anomaly occurs when a received CRC-8 code for the fast data stream is not identical to the corresponding locally generated code.

9.3.1.2 ADSL line related far-end anomalies

Similarly, four far-end anomalies are defined:

- **Far-end forward error correction interleaved (FFEC-I) anomaly**: An FFEC-I anomaly is an FEC-I anomaly detected at the far-end that is reported once per superframe by the FECC-I indicator. The FECC-I indicator shall be coded "1" to indicate that no FEC-I anomaly is present in the previous superframe and shall be coded to "0" to indicate that at least one FEC-I anomaly is present in the previous superframe. An FFEC-I anomaly occurs when a received FECC-I indicator is set to "0". An FFEC-I anomaly terminates when a received FECC-I indicator is set to "1".

IPR2025-00395
Petitioners' Exhibit 1011
Page 95 of 256

- **Far-end forward error correction fast (FFEC-F) anomaly**: An FFEC-F anomaly is an FEC-F anomaly detected at the far-end and is reported once per superframe by the FECC-F indicator. The FECC-F indicator shall be coded and reported in the same way as the FECC-I indicator. The FFEC-F anomaly shall occur and terminate in the same way as the FEBE-I anomaly.
- **Far-end Block Error interleaved (FEBE-I) anomaly**: An FEBE-I anomaly is a CRC-I anomaly detected at the far-end and is reported once per superframe by the FEBE-I indicator (see 7.4.1.1). The FEBE-I indicator shall be coded "1" to indicate that no CRC-I anomaly is present in the previous superframe and shall be coded "0"to indicate that a CRC-I anomaly is present in the previous superframe. An FEBE-I anomaly occurs when a received FEBE-I indicator is set to "0". An FEBE-I anomaly terminates when a received FEBE-I indicator is set to "1".
- **Far-end Block Error fast (FEBE-F) anomaly**: An FEBE-F anomaly is a CRC-F anomaly detected at the far-end and is reported once per superframe by the FEBE-F indicator (see 7.4.1.1). The FEBE-F indicator shall be coded and reported in the same way as the FEBE-I indicator. The FEBE-F anomaly shall occur and terminate in the same way as the FEBE-I anomaly.

9.3.1.3 ADSL line related near-end defects

Two near-end defects are defined:

- **Loss-of-signal (LOS) defect**: A pilot tone reference power is established by averaging the ADSL pilot tone power for 0.1 s after the start of steady state data transmission (i.e. after initialization), and a threshold shall be set at 6 dB below this. A LOS defect then occurs when the level of the received ADSL pilot tone power, averaged over a 0.1 s. period, is lower than the threshold, and terminates when measured in the same way it is at or above the threshold.
- **Severely errored frame (SEF) defect**: An SEF defect occurs when the content of two consecutively received ADSL synchronization symbols does not correlate with the expected content over a subset of the tones. An SEF defect terminates when the content of two consecutively received ADSL synchronization symbols correlate with the expected contents over the same subset. The correlation method, the selected subset of tones, and the threshold for declaring these defect conditions are implementation discretionary.

For Annex C, see C.6.1.

9.3.1.4 ADSL line related far-end defects

Similarly, two far-end defects are defined:

- **Loss-of-signal (LOS) defect**: A reference power is established by averaging the ADSL power over a 0.1 s period and over a subset of tones after the start of steady state data transmission (i.e. after initialization), and a threshold shall be set at 6 dB below this. A LOS defect occurs when the level of the received ADSL power, averaged over a 0.1 s period and over the same subset of tones, is lower than the threshold, and terminates when measured in the same way it is at or above the threshold. The subset of tones, over which the ADSL power is averaged, is implementation discretionary and may be restricted at the ATU-R to only the downstream pilot tone.
- **Far-end Remote defect indication (RDI)**: An RDI defect is an SEF defect detected at the far-end and is reported once per superframe by the RDI indicator. The RDI indicator (see 7.4.1.1) shall be coded "1" to indicate that no SEF defect is present in the previous superframe and shall be coded "0" to indicate that an SEF defect is present in the previous superframe. An RDI defect occurs when a received RDI indicator is set to "0". An RDI defect terminates when a received RDI indicator is set to "1".

IPR2025-00395
Petitioners' Exhibit 1011
Page 96 of 256

For Annex C, see C.6.1.2.

9.3.2 STM data path related primitives

In case STM data are transported on the U-interface, various ADSL payload types can be used. These payload types are not specified in this Recommendation and are for further study. The ADSL payload related primitives for STM transport are specific to a particular payload type and are for further study.

9.3.3 ATM data path related primitives

9.3.3.1 ATM data path related near-end anomalies

Six near-end anomalies are defined:

- **No Cell Delineation interleaved (NCD-I) anomaly**: An NCD-I anomaly occurs immediately after ATM Cell TC start-up when ATM data are allocated to the interleaved buffer and as long as the cell delineation process operating on these data is in the HUNT or PRESYNC state (see Figure 7-3). Once cell delineation is acquired, subsequent losses of cell delineation shall be considered OCD-I anomalies.
- **No Cell Delineation fast (NCD-F) anomaly**: An NCD-F anomaly occurs immediately after ATM Cell TC start-up when ATM data are allocated to the fast buffer and as long as the cell delineation process operating on these data is in the HUNT or PRESYNC state (see Figure 7-3). Once cell delineation is acquired, subsequent losses of cell delineation shall be considered OCD-F anomalies.
- **Out of Cell Delineation interleaved (OCD-I) anomaly**: An OCD-I anomaly occurs when ATM data are allocated to the interleaved buffer and the cell delineation process operating on these data transitions from SYNC to HUNT state (see Figure 7-3). An OCD-I anomaly terminates when the cell delineation process transitions from PRESYNC to SYNC state or when the LCD-I defect maintenance state is entered.
- **Out of Cell Delineation fast (OCD-F) anomaly**: An OCD-F anomaly occurs when ATM data are allocated to the fast buffer and the cell delineation process operating on these data transitions from SYNC to HUNT state (see Figure 7-3). An OCD-F anomaly terminates when the cell delineation process transitions from PRESYNC to SYNC state or when the LCD-F defect maintenance state is entered.
- **Header Error Control interleaved (HEC-I) anomaly**: An HEC-I anomaly occurs when an ATM cell header error check fails on the interleaved data (see 7.2.3.6).
- **Header Error Control fast (HEC-F) anomaly**: An HEC-F anomaly occurs when an ATM cell header error check fails on the fast data (see 7.2.3.6).

9.3.3.2 ATM data path related far-end anomalies

Similarly, six far-end anomalies are defined:

- **Far-end No Cell Delineation interleaved (FNCD-I) anomaly**: An FNCD-I anomaly is an NCD-I anomaly detected at the far-end and is reported once per superframe by the NCD-I indicator (see 7.4.1.1). The NCD-I indicator shall be coded "1" to indicate no NCD-I anomaly or OCD-I anomaly or LCD-I defect is present in the previous superframe and shall be coded "0" to indicate that at least one NCD-I anomaly or OCD-I anomaly or LCD-I defect is present in the previous superframe. An FNCD-I anomaly occurs immediately after ATU start-up and terminates if a received NCD-I indicator is coded "1".
- **Far-end No Cell Delineation fast (FNCD-F) anomaly**: An FNCD-F anomaly is an NCD-F anomaly detected at the far-end and is reported once per superframe by the NCD-F indicator (see 7.4.1.1). The NCD-F indicator shall be coded and reported in the same way as the NCD-I indicator. The FNCD-F anomaly shall occur and terminate in the same way as the

IPR2025-00395
Petitioners' Exhibit 1011
Page 97 of 256

FNCD-I anomaly.

- **Far-end Out of Cell Delineation interleaved (FOCD-I) anomaly**: An FOCD-I anomaly is an OCD-I anomaly detected at the far-end and is reported once per superframe by the NCD-I indicator (see 7.4.1.1). An FOCD-I anomaly occurs if no FNCD-I anomaly is present and a received NCD-I indicator is coded "0". An FOCD-I anomaly terminates if a received NCD-I indicator is coded "1".
- **Far-end Out of Cell Delineation fast (FOCD-F) anomaly**: An FOCD-F anomaly is an OCD-F anomaly detected at the far-end and is reported once per superframe by the NCD-F indicator (see 7.4.1.1). The FOCD-F anomaly shall occur and terminate in the same way as the FOCD-I anomaly.
- **Far-end Header Error Control interleaved (FHEC-I) anomaly**: An FHEC-I anomaly is an HEC-I anomaly detected at the far-end and is reported once per superframe by the HEC-I indicator (see 7.4.1.1). The HEC-I indicator shall be coded "1" to indicate that no HEC-I anomaly is present in the previous superframe and shall be coded "0" to indicate that at least one HEC-I anomaly is present in the previous superframe. An FHEC-I anomaly occurs when a received HEC-I indicator is set to "0". An FHEC-I anomaly terminates when a received HEC-I indicator is set to "1".
- **Far-end Header Error Control fast (FHEC-F) anomaly**: An FHEC-F anomaly is an HEC-F anomaly detected at the far-end and is reported once per superframe by the HEC-F indicator (see 7.4.1.1). The HEC-F indicator shall be coded and reported in the same way as the HEC-I indicator. The FHEC-F anomaly shall occur and terminate in the same way as the FHEC-I anomaly.

NOTE – The HEC-I and HEC-F anomalies are reported once per superframe. This results in a low granularity of hec anomaly reporting since hundreds of ATM cells may be received over a one superframe time period.

9.3.3.3 ATM data path related near-end defects

Two near-end defects are defined:

- **Loss of Cell Delineation interleaved (LCD-I) defect**: An LCD-I defect occurs when at least one OCD-I anomaly is present in each of 4 consecutive superframes and no SEF defect is present. An LCD-I defect terminates when no OCD-I anomaly is present in 4 consecutive superframes.
- **Loss of Cell Delineation fast (LCD-F) defect**: An LCD-F defect occurs when at least one OCD-F anomaly is present in each of 4 consecutive superframes and no SEF defect is present. An LCD-F defect terminates when no OCD-I anomaly is present in 4 consecutive superframes.

9.3.3.4 ATM data path related far-end defects

Similarly, two far-end defects are defined:

- **Far-end Loss of Cell Delineation interleaved (FLCD-I) defect**: An FLCD-I defect is an LCD-I defect detected at the far-end and is reported by the NCD-I indicator (see 7.4.1.1). An FLCD-I defect occurs when an FOCD-I anomaly is present and 4 consecutively received NCD-I indicators are coded 0 and no RDI defect is present. An FLCD-I defect terminates if four consecutively received NCD-I indicators are coded "1".
- **Far-end Loss of Cell Delineation fast (FLCD-F) defect**: An FLCD-F defect is an LCD-F defect detected at the far-end and is reported by the NCD-F indicator (see 7.4.1.1). An FLCD-F defect occurs and terminates in the same way as the FLCD-I defect.

IPR2025-00395
Petitioners' Exhibit 1011
Page 98 of 256

9.3.4 Other ADSL indicators, parameters and signals

9.3.4.1 Other near-end primitives

One other near-end primitive is defined:

- **Loss-of-power (LPR)**: An LPR primitive occurs when the ATU electrical supply (mains) power drops to a level equal to or below the manufacturer-determined minimum power level required to ensure proper operation of the ATU. An LPR primitive terminates when the power level exceeds the manufacturer determined minimum power level.

9.3.4.2 Other far-end primitives

Similarly, one other far-end primitive is defined:

- **Far-end Loss-of-power (LPR)**: A far-end LPR primitive is an LPR primitive detected at the far-end and is reported by the LPR indicator. The LPR indicator shall be coded with emergency priority in the next six available outgoing EOC messages (see the EOC protocol for "dying gasp" in 9.2.5.4). A far-end LPR primitive occurs when an LPR indicator is present. A far-end LPR primitive terminates if for a period of 0.5 s no LPR indicator is present and no near-end LOS defect is present. The condition for an LPR indicator being present is defined in the EOC protocol for "dying gasp" (9.2.5.4).

9.4 Failures and Performance Parameters

Failures, performance parameters and storage and reporting thereof shall be implemented as defined in Recommendation G.997.1.

9.5 Test Parameters

The attenuation (ATN) and signal-to-noise ratio (SNR) margin test parameters apply to on-demand test requests; e.g. to check for adequate physical media performance margin at acceptance and after repair verification, or at any other time following the execution of initialization and training sequence of the ADSL system. ATN and SNR, as measured by the receivers at both the ATU-C and the ATU-R shall be externally accessible from the ATU-C, but they are not required to be continuously monitored. They are made available on-demand as defined in 9.2.3.

9.5.1 Near-end test parameters

The following near-end test parameters shall be provided at the ATU-C and the ATU-R:

- **Attenuation (ATN)**: The attenuation is the difference in dB between the power received at the near-end and that transmitted from the far-end. Received signal power in dBm is the sum of all data-carrying (i.e. $b_i > 0$) DMT subcarrier powers averaged over a 1 second period. Transmitted signal power is $-3.65 - 2n + 10 \log (\Sigma g_i^2)$ dBm, summed over the data-carrying subcarriers. The attenuation ranges from 0 to 63.5 dB with 0.5 dB steps.
- **Signal-to-Noise Ratio (SNR) margin**: The signal-to-noise ratio margin represents the amount of increased received noise (in dB) relative to the noise power that the system is designed to tolerate and still meet the target BER of 10^{-7}, accounting for all coding (e.g. trellis coding, RS FEC) gains included in the design. The SNR margin ranges from –64.0 dB to +63.5 dB with 0.5 dB steps.

For Annex C, see C.6.2.1.

IPR2025-00395
Petitioners' Exhibit 1011
Page 99 of 256

9.5.2 Far-end test parameters

The following far-end test parameters shall be provided at the ATU-C:

- **Far-end Attenuation (ATN)**: The far-end attenuation is the attenuation measured at the far-end. It can be read from the EOC ATN register using the EOC command set (see 9.2.4). The EOC ATN register shall be coded as an unsigned integer, ranging from 0 to 127, corresponding to a 0 to 63.5 dB attenuation (0.5 dB steps).
- **Far-end Signal-to-Noise Ratio (SNR) margin**: The far-end signal-to-noise ratio margin is the signal-to-noise ratio margin measured at the far-end. It can be read from the EOC SNR register using the EOC command set (see 9.2.4). The EOC SNR register shall be coded as a 2's complement signed integer, ranging from –128 to +127, corresponding to a –64 to +63.5 dB signal-to-noise ratio margin (0.5 dB steps).

For Annex C, see C.6.2.2.

10 Initialization

10.1 Overview

10.1.1 Basic functions of initialization

ADSL transceiver initialization is required in order for a physically connected ATU-R and ATU-C pair to establish a communications link. The procedures for initiating a connection are specified in Recommendation G.994.1. This clause specifies the transceiver initialization and training procedures.

In order to maximize the throughput and reliability of this link, ADSL transceivers shall determine certain relevant attributes of the connecting channel and establish transmission and processing characteristics suitable to that channel. The time line of Figure 10-1 provides an overview of this process. In Figure 10-1, each receiver can determine the relevant attributes of the channel through the transceiver training and channel analysis procedures. Certain processing and transmission characteristics can also be established at each receiver during this time. During the exchange process, each receiver shares with its corresponding far-end transmitter certain transmission settings that it expects to see. Specifically, each receiver communicates to its far-end transmitter the number of bits and relative power levels to be used on each DMT subcarrier, as well as any messages and final data rates information. For highest performance, these settings should be based on the results obtained through the transceiver training and channel analysis procedures.

ATU-C

Handshake Procedures (10.2 and G.994.1)	Transceiver training (10.4)	Channel analysis (10.6)	Exchange (10.8)

ATU-R

Handshake Procedures (10.3 and G.994.1)	Transceiver training (10.5)	Channel analysis (10.7)	Exchange (10.9)

Time →

Figure 10-1/G.992.1 – Overview of initialization

Determination of channel attribute values and establishment of transmission characteristics requires that each transceiver produce, and appropriately respond to, a specific set of precisely-timed signals. This clause describes these initialization signals, along with the rules that determine the proper starting and ending time for each signal. This description is made through the definition of initialization signalling states in which each transceiver will reside, and the definition of

IPR2025-00395
Petitioners' Exhibit 1011
Page 100 of 256

initialization signals that each transceiver will generate. A state and the signal generated while in that state have the same name, which may sometimes, for clarity, be prefixed by "state" or "signal".

The sequence of generated downstream and upstream states/signals for a successful initialization procedure is shown by the time lines of Figures 10-1 to 10-4; details of the timing of the states are shown in Figures 10-5 and 10-6. The dashed arrows indicate that the change of state in the ATU-x at the head of the arrow is caused by a successful reception of the last signal shown in the box at the base of the arrow. For example, in Figure 10-3, the ATU-R stays in state R-REVERB3 until it finishes receiving C-CRC2, at which point it moves on to R-SEGUE2 after an appropriate delay (see 10.7.2).

NOTE – The figures show the sequence of events in a successful initialization.

An overall state diagram is specified in Annex D, including the handling of failures to detect signals, timeouts, etc.

The description of a signal will consist of three parts:

- The first part is a description of the voltage waveform that the transmitter shall produce at its output when in the corresponding state. The output voltage waveform of a given initialization signal is described using the DMT transmitter reference models shown in Figures 5-1 to 5-4.
- The second is a statement of the required duration, expressed in DMT symbol periods, of the signal. This signal duration may be a constant or may depend upon the detected signalling state of the far-end transceiver. The duration of a single DMT symbol period depends on whether the cyclic prefix is being used; some initialization signals contain a cyclic prefix, and some do not. ATU-C signals up to and including C-SEGUE1 are transmitted without a cyclic prefix; those from C-RATES1 on are transmitted with a prefix. Similarly, ATU-R signals up to and including R-SEGUE1 do not use a prefix; those from R-REVERB3 onward do. The duration of any signal in seconds is therefore the defined number of DMT symbol periods times the duration of the DMT symbol being used.
- The third part of a signal's description is a statement of the rule specifying the next state.

10.1.2 Transparency to methods of separating upstream and downstream signals

Manufacturers may choose to implement this Recommendation using either frequency-division-multiplexing (FDM) or echo cancelling (overlapped spectrum) to separate upstream and downstream signals. The initialization procedure described here ensures compatibility between these different implementations by specifying all upstream and downstream control signals to be in the appropriate, but narrower, frequency bands that would be used by an FDD transceiver, and by defining a time period during which an overlapped spectrum transceiver can train its echo canceller.

10.1.3 Implementation of service options for ADSL

The initialization procedure described here uses single tones to identify specific options. The frequencies of these tones vary depending upon whether the ADSL service is offered with POTS or ISDN service as defined in Recommendation G.961, Appendix I, II, or III.

These frequencies are therefore identified here only as variables, which are defined in Annexes A, B, and C of this Recommendation.

10.1.4 Resetting during initialization and data transmission

Resetting may occur if errors or malfunctions are detected or timeout limits are exceeded at various points in the initialization sequence and SHOWTIME. An ATU executes a reset by transitioning to G.994.1 procedures. An ATU-R detecting an error condition shall transition to R-SILENT0 (see Recommendation G.994.1). An ATU-C detecting an error condition shall transition to C-SILENT1 (see Recommendation G.994.1).

IPR2025-00395
Petitioners' Exhibit 1011
Page 101 of 256

Annex D specifies the state transitions that shall occur if errors or malfunctions are detected or timeout limits are exceeded at various points in the initialization sequence. Annex D also specifies conditions for which retraining may be required during data transmission (i.e. after a successful initialization).

10.1.5 Initialization with Hyperframe (Annex C only)

For Annex C, see C.7.1.

10.2 Handshake – ATU-C

The detailed procedures for handshake at the ATU-C are defined in Recommendation G.994.1. An ATU-C, after power-up or on conditions shown in Figure D.1, shall enter the initial Recommendation G.994.1 state C-SILENT1. The ATU-C may transition to C-TONES under instruction of the network. From either state, operation shall proceed according to the procedures defined in Recommendation G.994.1.

If G.994.1 procedures select this Recommendation as the mode of operation, the ATU-C shall transition to state C-QUIET2 at the conclusion of G.994.1 operation. All subsequent signals shall be transmitted using PSD levels as defined in the remainder of this subclause.

10.2.1 CL messages

An ATU-C wishing to indicate G.992.1 capabilities in a G.994.1 CL message shall do so by setting to ONE at least one of the Standard Information Field {SPar(1)} G.992.1 bits as defined in Table 23/G.994.1. For each G.992.1 {SPar(1)} bit set to ONE, a corresponding {NPar(2)} field shall also be present (see 9.4/G.994.1). The G.994.1 CL message:{NPar(2)} fields corresponding to the {SPar(1)} bits are defined in Table 10-1.

Table 10-1/G.992.1 – ATU-C CL message NPar(2) bit definitions

NPar(2) bit	Definition
R-ACK1	Shall always be set to ONE. Signifies that the ATU-C is capable of sending C-PILOT1A, C-QUIET3A, C-PILOT2 and C-QUIET5 during transceiver training.
R-ACK2	Shall always be set to ONE in a CL message. Signifies that the ATU-C is capable of sending C-PILOT1, C-PILOT2 and C-PILOT3 during transceiver training.
Tones 1 to 32	See B.3.1.1.
STM	If set to ONE, signifies that the ATU-C can be configured for STM bit sync transport.
ATM	If set to ONE, signifies that the ATU-C can be configured for ATM cell transport.
EOC-Clear	If set to ONE, signifies that the ATU-C supports transmission and reception of G.997.1 OAM frames.
DBM	See C.7.2.1.

At least one of the STM and ATM bits shall be set to ONE in a CL message.

10.2.2 MS messages

An ATU-C selecting a G.992.1 mode of operation in a G.994.1 MS message shall do so by setting to ONE the appropriate Standard Information Field {SPar(1)} G.992.1 bits as defined in Table 23/G.994.1. For the G.992.1 {SPar(1)} bit set to ONE, a corresponding {NPar(2)} field shall also be present (see 9.4/G.994.1). The G.994.1 MS message {NPar(2)} fields corresponding to the {SPar(1)} bit are defined in Table 10-2.

IPR2025-00395
Petitioners' Exhibit 1011
Page 102 of 256

Table 10-2/G.992.1 – ATU-C MS message NPar(2) bit definitions

NPar(2) bit	Definition
R-ACK1	Signifies that the ATU-C shall send C-PILOT1A, C-QUIET3A, C-PILOT2 and C-QUIET5 during transceiver training.
R-ACK2	Signifies that the ATU-C shall send C-PILOT1, C-PILOT2 and C-PILOT3 during transceiver training.
Tones 1 to 32	See B.3.1.2.
STM	Signifies that the ATU-C is configured for STM bit sync transport.
ATM	Signifies that the ATU-C is configured for ATM cell transport.
EOC-Clear	Set to ONE, if and only this bit was set to ONE in both last previous CL message and last previous CLR message. Signifies that both ATU-C and ATU-R may transmit and receive G.997.1 OAM frames.
DBM	See C.7.2.2.

One and only one of the R-ACK1 and R-ACK2 bits shall be set to ONE in an MS message sent from the ATU-C. If both bits are enabled in the CL and CLR message, the R-ACK1 or R-ACK2 selection is at the ATU-C's discretion.

One and only one of the STM and ATM bits shall be set to ONE in an MS message sent from the ATU-C. If both bits are enabled in the CL and CLR message, the STM or ATM selection is at the ATU-C's discretion.

10.3 Handshake – ATU-R

The detailed procedures for handshake at the ATU-R are defined in Recommendation G.994.1. An ATU-R, after power-up or on conditions shown in Figure D.2, shall enter the initial G.994.1 state R-SILENT0. Upon command from the host controller, the ATU-R shall initiate handshaking by transitioning from the R-SILENT0 state to the G.994.1 R-TONES-REQ state. Operation shall then proceed according to the procedures defined in Recommendation G.994.1.

If G.994.1 procedures select this Recommendation as the mode of operation, the ATU-R shall transition to state R-QUIET2 at the conclusion of G.994.1 operation. All subsequent signals shall be transmitted using PSD levels as defined in the remainder of this subclause.

10.3.1 CLR messages

An ATU-R wishing to indicate G.992.1 capabilities in a G.994.1 CLR message shall do so by setting to ONE at least one of the Standard Information Field {SPar(1)} G.992.1 bits as defined in Table 23/G.994.1. For each G.992.1 {SPar(1)} bit set to ONE, a corresponding {NPar(2)} field shall also be present (see 9.4/G.994.1). The G.994.1 CLR message {NPar(2)} fields corresponding to the {SPar(1)} bits are defined in Table 10-3.

IPR2025-00395
Petitioners' Exhibit 1011
Page 103 of 256

Table 10-3/G.992.1 – ATU-R CLR message NPar(2) bit definitions

NPar(2) bit	Definition
R-ACK1	If set to ONE, signifies that the ATU-R is capable of receiving C-PILOT1A, C-QUIET3A, C-PILOT2 and C-QUIET5 during transceiver training.
R-ACK2	If set to ONE, signifies that the ATU-R is capable of receiving C-PILOT1, C-PILOT2 and C-PILOT3 during transceiver training.
Tones 1 to 32	See B.3.2.1.
STM	If set to ONE, signifies that the ATU-R can be configured for STM bit sync transport.
ATM	If set to ONE, signifies that the ATU-R can be configured for ATM cell transport.
EOC-Clear	If set to ONE, signifies that the ATU-R supports transmission and reception of G.997.1 OAM frames.
DBM	See C.7.3.1.

At least one of the R-ACK1 and R-ACK2 bits shall be set to ONE in a CLR message.

At least one of the STM and ATM bits shall be set to ONE in a CLR message.

10.3.2 MS messages

An ATU-R selecting a G.992.1 mode of operation in a G.994.1 MS message shall do so by setting to ONE the appropriate Standard Information Field {SPar(1)} G.992.1 bits as defined in Table 23/G.994.1. For the G.992.1 {SPar(1)} bit set to ONE, a corresponding {NPar(2)} field shall also be present (see 9.4/G.994.1). The G.994.1 MS message {NPar(2)} fields corresponding to the {SPar(1)} bit are defined in Table 10-4.

Table 10-4/G.992.1 – ATU-R MS message NPar(2) bit definitions

NPar(2) bit	Definition
R-ACK1	Signifies that the ATU-C shall send C-PILOT1A, C-QUIET3A, C-PILOT2 and C-QUIET5 during transceiver training.
R-ACK2	Signifies that the ATU-C shall send C-PILOT1, C-PILOT2 and C-PILOT3 during transceiver training.
Tones 1 to 32	See B.3.2.2.
STM	Set to ONE if and only if this bit was set to ONE in both the last previous CL message and the last previous CLR message. Signifies that the ATU-C and ATU-R shall be configured for STM bit sync transport.
ATM	Set to ONE if and only if this bit was set to ONE in both the last previous CL message and the last previous CLR message. Signifies that the ATU-C and ATU-R shall be configured for ATM cell transport.
EOC-Clear	Set to ONE, if and only this bit was set to ONE in both last previous CL message and last previous CLR message. Signifies that both ATU-C and ATU-R may transmit and receive G.997.1 OAM frames.
DBM	See C.7.3.2.

One and only one of the R-ACK1 and R-ACK2 bits shall be set to ONE in an MS message sent from the ATU-R. If both bits are enabled in the CL and CLR message, the R-ACK1 or R-ACK2 selection is at the ATU-R's discretion.

One and only one of the STM and ATM bits shall be set to ONE in an MS message sent from the ATU-R. If both bits are enabled in the CL and CLR message, the STM or ATM selection is at the ATU-R's discretion.

IPR2025-00395
Petitioners' Exhibit 1011
Page 104 of 256

10.4 Transceiver training – ATU-C

This subclause and 10.5 describe the signals transmitted during transceiver training by the ATU-C and ATU-R, respectively. Synchronization of the mutual training begins with the transmission of R-REVERB1 (see 10.5.2), and is maintained throughout training by both transceivers counting the number of symbols from that point on.

QUIET signals are defined as zero output voltage from the DAC of Figures 5-1 through 5-4.

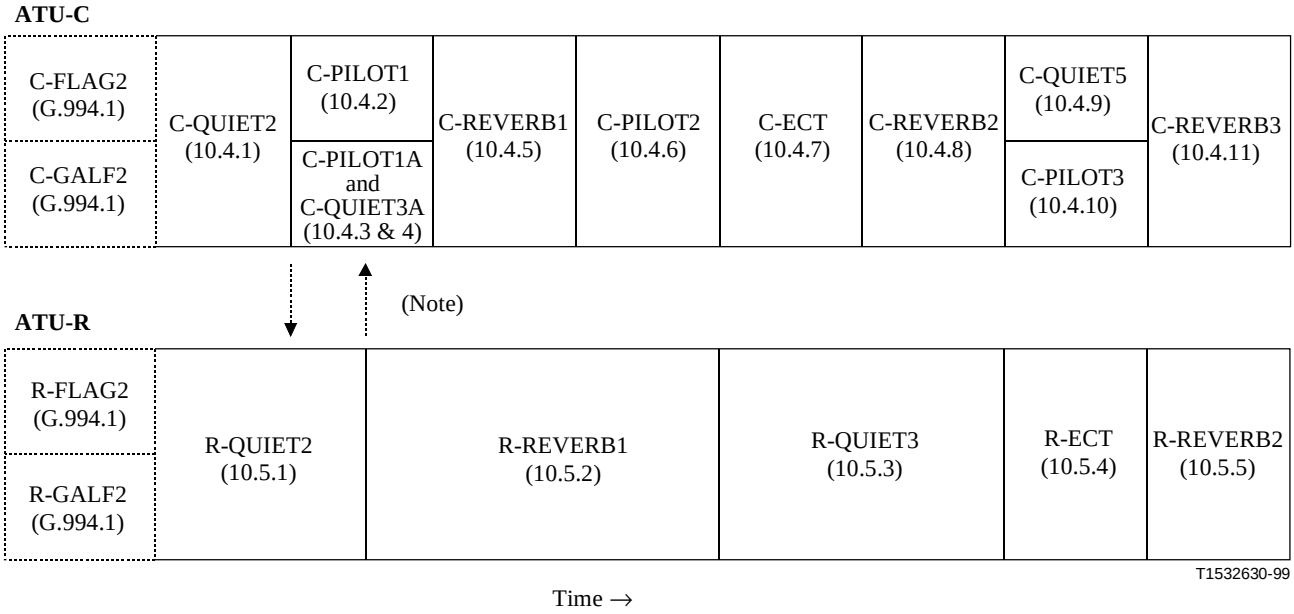

NOTE – Because the ATU-C and ATU-R states are synchronized from this point on, no more "cause-and-effect" arrows are shown.

Figure 10-2/G.992.1 – Timing diagram of transceiver training (10.4-10.5)

10.4.1 C-QUIET2

C-QUIET2 begins at the termination of either C-FLAG2 or C-GALF2 (see Recommendation G.994.1).

The minimum duration of C-QUIET2 is 128 symbols. The maximum duration of C-QUIET2 is 2048 symbols.

The state that the ATU-C enters following C-QUIET2 depends upon parameters negotiated in the G.994.1 procedure.

10.4.2 C-PILOT1

During C-PILOT1, the ATU-C shall measure the aggregate received upstream power on a subset of the subcarriers transmitted during R-REVERB1, and thereby calculate a downstream PSD (see 10.4.5).

Within 16 symbols after detection of the first symbol of R-REVERB1 the ATU-C shall start a timer: this establishes synchronization of the subsequent transitions between states at ATU-C and ATU-R. After 512 symbols the ATU-C shall go to C-REVERB1. Thus the minimum duration of C-PILOT is 512 symbols, but it will exceed this by the round-trip propagation and signal-processing time plus the amount of time required by ATU-R to detect C-PILOT1 and respond by transmitting R-REVERB1 (see 10.5.2).

IPR2025-00395
Petitioners' Exhibit 1011
Page 105 of 256

C-PILOT1 is a single frequency sinusoid at $f_{\text{C-PILOT1}}$ defined as:

$$X_k = \begin{cases} 0, & k \neq n_{C-PILOT1}, 0 \leq k \leq 256 \\ A_{C-PILOT1}, & k = n_{C-PILOT1} \end{cases}$$

with $k = n_{\text{C-PILOT1}}$ defined in Annexes A, B and C. $A_{\text{C-PILOT1}}$ shall be such that the transmit power level is –3.65 dBm. The duration of C-PILOT1 can be up to 4436 symbols.

C-REVERB1 follows C-PILOT1.

For Annex A, see A.1.1.

For Annex B, see B.3.6.

For Annex C, see C.7.4.1.

10.4.3 C-PILOT1A

C-PILOT1A is the same transmitted signal as C-PILOT1 (10.4.2). The duration of C-PILOT1A can be up to 4000 symbols. The exact duration of C-PILOT1A depends upon the duration of R-QUIET2.

Within 16 symbols after detection of the first symbol of R-REVERB1 the ATU-C shall start a timer (this establishes synchronization of the subsequent transitions between states at the ATU-C and ATU-R) and shall proceed to C-QUIET3A.

An ATU-C implementation which would like to know that an ATU-R will acquire pilot lock prior to the start of R-REVERB1 can detect the length of R-QUIET2.

C-QUIET3A follows C-PILOT1A.

10.4.4 C-QUIET3A

Within 512 to 516 symbols after detection of the first symbol of R-REVERB1, the ATU-C shall go to C-REVERB1. Thus the minimum duration of C-QUIET3A is 512-16 (496) symbols, the maximum is 516 symbols. The total duration of C-QUIET3A and C-PILOT1A is a minimum of 512 symbols, but it will exceed this (up to a maximum duration of 4436 symbols) by the round-trip propagation and signal-processing time plus the amount of time required by ATU-R to detect C-PILOT1A and respond by transmitting R-REVERB1.

C-REVERB1 follows C-QUIET3A.

10.4.5 C-REVERB1

C-REVERB1 is a signal that allows the ATU-C and ATU-R receiver to adjust its automatic gain control (AGC) to an appropriate level. The data pattern used in C-REVERB1 shall be the pseudo-random downstream sequence (PRD), d_n for n = 1 to 512, defined in 7.11.3 and repeated here for convenience:

$$\begin{aligned} d_n &= 1 && \text{for } n = 1 \text{ to } 9 \\ &= d_{n-4} \oplus d_{n-9} && \text{for } n = 10 \text{ to } 512 \end{aligned} \qquad (10\text{-}1)$$

The bits shall be used as follows: the first pair of bits (d_1 and d_2) is used for the DC and Nyquist subcarriers (the power assigned to them is, of course, zero, so the bits are effectively ignored); then the first and second bits of subsequent pairs are used to define the X_i and Y_i for i = 1 to 255 as defined in Table 7-13.

The period of PRD is only 511 bits, so d_{512} shall be equal to d_1. The bits d_1 to d_9 shall be re-initialized for each symbol, so each symbol of C-REVERB1 is identical.

Bits 129 and 130, which modulate the pilot carrier, shall be overwritten by {0,0}: generating the {+,+} constellation.

IPR2025-00395
Petitioners' Exhibit 1011
Page 106 of 256

The duration of C-REVERB1 is 512 (repeating) symbols without cyclic prefix.

10.4.5.1 Power Cut-back

The nominal transmit PSD for C-REVERB1 is –40 dBm/Hz (i.e. –3.65 dBm total transmit power in any 4.3125 kHz wide sliding window over the used passband). If, however, the total upstream power measured during R-REVERB1 exceeds the levels defined in the appropriate Annex (A, B or C), the transmit PSD shall be reduced to a level of $-40 - 2n_{PCB}$ dBm/Hz as defined in that annex with $n_{PCB} = 0$ to 6.

For Annexes A and C, see A.3.1.

For Annex B, see B.3.3.

10.4.6 C-PILOT2

The C-PILOT2 signal is the same as C-PILOT1; the duration is 3072 symbols. C-ECT follows C-PILOT2.

10.4.7 C-ECT

C-ECT is a vendor-defined signal that is used to train the echo canceller at ATU-C for overlapped spectrum implementations. Vendors of FDM versions have complete freedom to define their C-ECT signal. The duration of C-ECT, however, is fixed at 512 symbols. The receiver at ATU-R should ignore this signal. C-REVERB2 follows C-ECT.

NOTE – The level of the ADSL signal in the frequency band from 0 to about 10 kHz that leaks through the POTS low-pass filter is tightly limited (see Annex E). Therefore it is recommended that subcarriers 1-4 not be used for C-ECT, or, at least, that they be transmitted at a much lower level.

Annex B supplemental information appears in B.3.11.

10.4.8 C-REVERB2

C-REVERB2 is a signal that allows the ATU-R receiver to perform synchronization and to train any receiver equalizer. C-REVERB2 is the same as C-REVERB1 (see 10.4.5). The duration of C-REVERB2 is 1536 (repeating) symbols without cyclic prefix. The state following C-REVERB2 depends upon negotiated parameters in Recommendation G.994.1.

10.4.9 C-QUIET5

The duration of C-QUIET5 is 512 symbols. C-REVERB3 follows C-QUIET5.

10.4.10 C-PILOT3

C-PILOT3 signal is the same as C-PILOT1 (10.4.2). The duration of C-PILOT3 is 512 symbols.

C-REVERB3 follows C-PILOT3.

10.4.11 C-REVERB3

C-REVERB3 is a second training signal, which allows the ATU-R receiver to perform or maintain synchronization and to further train any receiver equalizer. C-REVERB3 is the same as C-REVERB2 (see 10.4.8). The duration of C-REVERB3 is 1024 (repeating) symbols without cyclic prefix. This is the last segment of transceiver training. C-SEGUE1 follows immediately.

10.5 Transceiver training – ATU-R

10.5.1 R-QUIET2

R-QUIET2 begins at the termination of either R-FLAG2 or R-GALF2 (see Recommendation G.994.1).

IPR2025-00395
Petitioners' Exhibit 1011
Page 107 of 256

The minimum duration of R-QUIET2 is 128 DMT symbols after the detection of C-PILOT1/1A. The ATU-R shall progress to R-REVERB1 only after it has detected any part of C-PILOT1/1A that is needed for reliable detection. The maximum duration of R-QUIET2 of 8000 symbols.

Loop timing is defined as the combination of the slaving of an ADC clock to the received signal (i.e. to the other transceiver's DAC clock), and tying the local DAC and ADC clocks together. Loop timing shall always be performed at the ATU-R. Loop timing shall be acquired during the period that begins with the start of R-QUIET2 and ends before the last 512 symbols of R-REVERB1. An ATU-C may train its equalizer during the last 512 symbols of R-REVERB1. Such equalizer training, at the ATU-C, requires sufficient sampling clock stability at the ATU-R transmitter. After loop timing is acquired at ATU-R, the ATU-R shall reacquire loop timing after a period with free running timing (i.e. no C-PILOT over maximum 512 symbols) within 512 symbols after the C-PILOT reappearing. This applies to C-QUIET5 and may also apply to C-QUIET3A and C-ECT.

NOTE – The delay in the ATU-R in going from R-QUIET2 to R-REVERB1 is to allow the possibility that the ATU-R may fully synchronize its time base before sending R-REVERB1 and the possibility that the implementation of G.994.1 and G.992.1 may be in separate entities.

10.5.2 R-REVERB1

R-REVERB1 is used to allow the ATU-C to:

- measure the upstream wideband power in order to adjust the ATU-C transmit power level;
- adjust its receiver gain control;
- synchronize its receiver and train its equalizer.

The bits shall be used as defined in Annexes A, B and C.

For Annex A, see A.3.5.

For Annex B, see B.3.7.

For Annex C, see C.7.5.2.

The period of PRD is only 63 bits, so d_{64} shall be equal to d_1.

The d_1 to d_6 shall be re-initialized for each symbol, so each symbol of R-REVERB1 uses the same data.

The nominal transmit PSD for R-REVERB1 and all subsequent upstream signals is –38 dBm/Hz (i.e. –1.65 dBm total transmit power in any 4.3125 kHz wide sliding window over the used passband).

R-REVERB1 is a periodic signal, without cyclic prefix, that is transmitted consecutively for 4096 symbols. The first 512 symbols coincide with C-QUIET3 or C-PILOT1 signal in time, the second 512 symbols coincide with C-REVERB1, and the last 3072 symbols coincide with C-PILOT2. R-QUIET3 immediately follows R-REVERB1.

10.5.3 R-QUIET3

The duration of R-QUIET3 is 2048 symbols, of which the first 512 symbols coincide with C-ECT in time, and the next 1536 symbols coincide with C-REVERB2. The final symbol of R-QUIET3 may be shortened by any number of samples to accommodate transmitter-to-receiver frame alignment. R-ECT immediately follows R-QUIET3.

10.5.4 R-ECT

R-ECT, similar to C-ECT, is a vendor-defined signal that may be used to train an echo canceller at ATU-R. Vendors of FDM versions have absolute freedom to define R-ECT signal. The duration of R-ECT, however, is fixed at 512 DMT symbols. The receiver at ATU-C ignores this signal. R-REVERB2 follows R-ECT.

IPR2025-00395
Petitioners' Exhibit 1011
Page 108 of 256

NOTE – The level of the ADSL signal in the frequency band from 0 to about 10 kHz that leaks through the POTS low-pass filter is tightly limited (see Annex E). Therefore it is recommended that subcarriers 1-4 not be used for R-ECT, or, at least, that they be transmitted at a much lower level.

Annex B supplemental information appears in B.3.11.

10.5.5 R-REVERB2

The signal R-REVERB2 is the same as R-REVERB1 (see 10.5.2); it can be used by ATU-C to perform timing recovery and receiver equalizer training. The duration of R-REVERB2 shall be between 1024 and 1056 symbols. This signal is the last segment of transceiver training. ATU-R then begins channel analysis and starts transmitting R-SEGUE1.

10.6 Channel analysis (ATU-C)

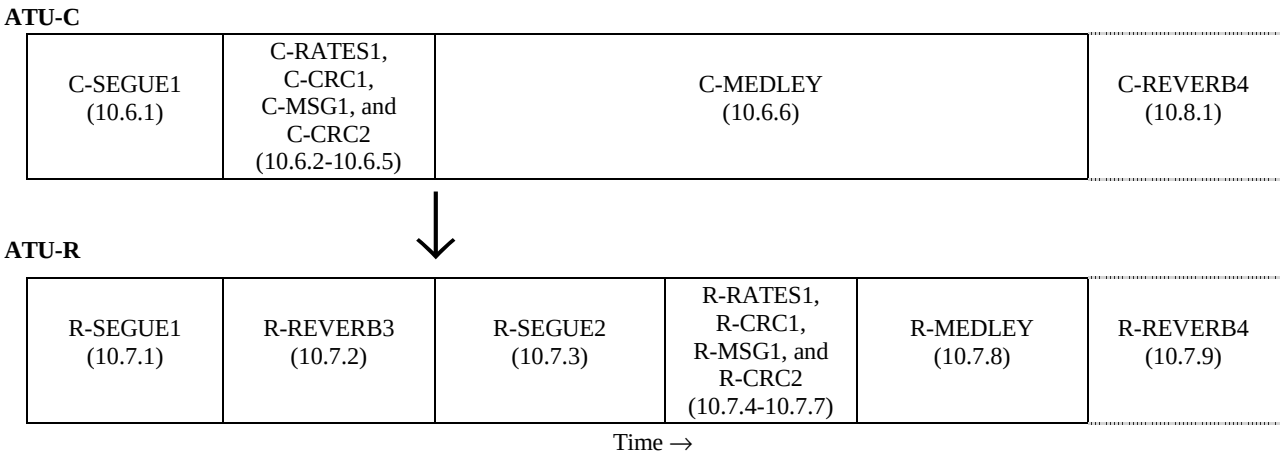

Figure 10-3/G.992.1 – Timing diagram of channel analysis (10.6-10.7)

During channel analysis the synchronization between ATU-C and ATU-R may be broken during R-REVERB3, which has an indefinite duration; this potential timeout is described in 10.7.2. Furthermore, if during channel analysis any CRC check sum indicates an error in any of the control data, this shall trigger a reset to C-SILENT1 (see Recommendation G.994.1).

10.6.1 C-SEGUE1

Except for the pilot tone, C-SEGUE1 shall be generated from a tone-by-tone 180 degree phase reversal of C-REVERB1 (i.e. + maps to –, and – maps to +, for each of the 4-QAM signal constellation). The duration of C-SEGUE1 is 10 (repeating) symbol periods. Following C-SEGUE1, ATU-C enters state C-RATES1.

10.6.2 C-RATES1

C-RATES1 is the first ATU-C signal for which a cyclic prefix (defined in 7.12) is used. The purpose of C-RATES1 is to transmit four options for data rates and formats to the ATU-R. Each option consists of three fields:

- B_F lists the number of bytes in the fast buffer for each of AS0, AS1, AS2, AS3, LS0, LS1, LS2, LS0 (upstream), LS1 (upstream), LS2 (upstream) channels, in that order; B_F has a total of 80 (= 10 × 8) bits. The first 8 bits of B_F specify the number of bytes in AS0, the second 8 bits specify the number of bytes in AS1, and so on. Each byte of B_F is transmitted with least significant bit first.
- B_I similarly lists the number of bytes in the interleaved buffer. In order to support data rates greater than 8 Mbit/s, the B_I field is eight bits.

IPR2025-00395
Petitioners' Exhibit 1011
Page 109 of 256

- $\{RS_F, RS_I, S, I, FS(\text{LS2})\}$ is a ten-byte quantity comprising (one byte each):
  - the RS_F field, containing RS_F, the number of parity bytes per symbol in the downstream fast buffer, with $0 \le RS_F \le 63$ and RS_F equal to R_F (R_F is defined in 7.4.1.2.1);
  - the RS_I field, containing the value of RS_I, the number of parity bytes per symbol in the downstream interleave buffer, with $0 \le RS_I \le 63$ and RS_I equal to R_I/S (R_I and S are defined in 7.4.1.2.2);
  - the S field, containing the value of S, the number of symbols per codeword (downstream), with $0 \le S \le 63$;
  - the I field, containing the eight least significant bits I_7 to I_0 of the downstream interleave depth in codewords, with $0 \le I \le 128$;
  - the FS(LS2) field is a field of eight zeros;
  - the same five quantities $\{RS_F, RS_I, S, I, FS(\text{LS2})\}$ in the upstream direction (one-byte each, in that order).

The four options are transmitted in order of decreasing preference. C-RATES1 is preceded by a 4-byte prefix of $\{01010101\ 01010101\ 01010101\ 01010101_2\}$. Table 10-5 summarizes C-RATES1.

Table 10-5/G.992.1 – C-RATES1

	Prefix	**Option 1**			**Option 2**			**Option 3**			**Option 4**		
		B_F	B_I	*RRSI*	B_F	B_I	*RRSI*	B_F	B_I	*RRSI*	B_F	B_I	*RRSI*
Number of bytes	4	10	10	10	10	10	10	10	10	10	10	10	10

Only one bit of information is transmitted in each symbol of C-RATES1: a zero bit is encoded to one symbol of C-REVERB1 and a one bit is encoded to one symbol of C-SEGUE1. Since there are a total of 992 bits of C-RATES1 information, the duration of C-RATES1 is 992 symbols. The 992 bits are to be transmitted in the order shown in Table 10-5, with the least significant bit first. That is, the least significant bit of option 1, B_F, is to be transmitted during the 33rd symbol of C-RATES1, after the prefix. Following C-RATES1, the ATU-C shall enter state C-CRC1.

10.6.3 C-CRC1

C-CRC1 is a cyclic redundancy check for detection of errors in the reception of C-RATES1 at the ATU-R. The CRC bits are computed from the C-RATES1 bits using the equation:

$$c(\mathrm{D}) = a(\mathrm{D})\ \mathrm{D}^{16} \text{ modulo } \mathrm{g}(\mathrm{D}), \tag{10-2}$$

where:

$$a(\mathrm{D}) = a_0\ \mathrm{D}^{959} + a_1\ \mathrm{D}^{958} \ldots + a_{959} \tag{10-3}$$

is the message polynomial formed from the 960 bits of C-RATES1, with a_0 the least significant bit of the first byte of C-RATES1 (i.e. option 1 B_F);

$$\mathrm{g}(\mathrm{D}) = \mathrm{D}^{16} + \mathrm{D}^{12} + \mathrm{D}^{5} + 1 \tag{10-4}$$

is the CRC generator polynomial, and

$$\mathrm{c}(\mathrm{D}) = c_0\mathrm{D}^{15} + c_1\mathrm{D}^{14} \ldots + c_{14}\mathrm{D} + c_{15} \tag{10-5}$$

is the CRC check polynomial.

The 16 bits c_0-c_{15} are transmitted (c_0 first and c_{15} last) in 16-symbol periods using the method described in 10.6.2. Following C-CRC1, the ATU-C shall enter state C-MSG1.

IPR2025-00395
Petitioners' Exhibit 1011
Page 110 of 256

10.6.4 C-MSG1

C-MSG1 transmits a 48-bit message signal to the ATU-R. This message includes vendor identification, ATU-C transmit power level used, trellis code option, echo canceller option, etc. The message, *m*, is defined by:

$$m = \{m_{47}, m_{46}, \ldots, m_1, m_0\} \tag{10-6}$$

with m_0 being transmitted first. The message components are defined in the following subclauses, and their assigned positions within the composite message, *m*, are defined in Table 10-6.

A total of 48 symbol periods are used to communicate the 48-bit message, using the encoding method described in 10.6.2. Following C-MSG1, the ATU-C shall enter signalling state C-CRC2.

Table 10-6/G.992.1 – Assignment of 48 bits of C-MSG1

Suffix(ces) of m_i (Note 1)	Parameter (Note 3)
47-44	Minimum required downstream SNR margin at initialization (Note 2)
43-18	Reserved for future use
17	Trellis coding option
16	Overlapped spectrum option (Note 4)
15	Unused (shall be set to "1")
14-12	Reserved for future use
11	NTR
10-9	Framing mode
8-6	Transmit PSD during initialization
5, 4	Reserved
3, 2, 1, 0	Maximum numbers of bits per subcarrier supported
NOTE 1 – Within the separate fields the least significant bits have the lowest subscripts. NOTE 2 – A positive number of dB; binary coded 0-15 dB. NOTE 3 – All reserved bits shall be set to "0". NOTE 4 – The initialization sequence allows for interworking of overlapped and non-overlapped spectrum implementations. Therefore, this indication is for information only.	

10.6.4.1 Minimum required SNR margin – Bits 47-44

Binary coded 0 to 15 dB.

10.6.4.2 Trellis coding option – Bit 17

$m_{17} = 0$ indicates no trellis coding capability, $m_{17} = 1$ indicates trellis coding capability.

10.6.4.3 Overlapped Spectrum option – Bit 16

$m_{16} = 0$ indicates no echo cancellation, $m_{16} = 1$ indicates echo cancellation.

10.6.4.4 Unused – Bit 15

m_{15} shall be set to "1".

IPR2025-00395
Petitioners' Exhibit 1011
Page 111 of 256

10.6.4.5 NTR – Bit 11

m_{11} = 1 indicates that the ATU-C will use indicator bits ib23 to ib20 as defined in 7.3.2 for the transport of the NTR.

10.6.4.6 Framing mode – Bits 10, 9

m_{10} and m_9 are used by the ATU-C to indicate which of the four framing structures is to be used (see 7.4). The lowest framing structure indicated by the ATU-C or ATU-R shall be used.

10.6.4.7 Transmit PSD during initialization – Bits 8, 7, 6

The ATU-C shall report the level of C-REVERB1 chosen as a result of the calculation described in 10.4.5. The encoding rules for m_8, m_7, m_6 are shown in Table 10-7.

Table 10-7/G.992.1 – C-MSG1 encoding rules for transmit PSD during C-REVERB1

m_8	m_7	m_6	PSD dBm/Hz
1	1	1	–40
1	1	0	–42
1	0	1	–44
1	0	0	–46
0	1	1	–48
0	1	0	–50
0	0	1	–52
NOTE – The rules for selecting a reduced PSD level depend on the service option, and are defined in Annexes A, B and C; the levels themselves are independent of the service option, and are defined here.			

10.6.4.8 Maximum numbers of bits per subcarrier supported – Bits 3-0

The N_{downmax} (transmit) capability shall be binary encoded onto $\{m_3, ..., m_0\}$ (e.g. $1101_2 = 13$). The maximum number of bits for the upstream data, N_{upmax}, that the ATU-C receiver can support need not be signalled to the ATU-R; it will be implicit in the bits and gains message, C-B&G, which is transmitted after channel analysis.

10.6.5 C-CRC2

C-CRC2 is a cyclic redundancy check for detection of errors in the reception of C-MSG1 at the ATU-R. The CRC generator polynomial is as defined in 10.6.3. The CRC message polynomial is as constructed in 10.6.3, with m_0 corresponding to a_0 and m_{47} corresponding to a_{47}. The CRC check polynomial is generated in the same way as defined in 10.6.3. These 16 bits are transmitted in 16-symbol periods using the method described in 10.6.2. Following C-CRC2, the ATU-C shall enter signalling state C-MEDLEY.

10.6.6 C-MEDLEY

C-MEDLEY is a wideband pseudo-random signal used for estimation at the ATU-R of the downstream SNR. The data to be transmitted are derived from the pseudo-random sequence, PRD, and modulated as defined in 10.4.5. In contrast to C-REVERB1, however, the cyclic prefix is used and the data sequence continues from one symbol to the next (i.e. d_1 to d_9 are not re-initialized for each symbol); since PRD is of length 511, and 512 bits are used for each symbol, the subcarrier vector for C-MEDLEY therefore changes from one symbol period to the next. The pilot subcarrier is overwritten by the (+,+) signal constellation. C-MEDLEY is transmitted for 16 384 symbol periods.

IPR2025-00395
Petitioners' Exhibit 1011
Page 112 of 256

Following C-MEDLEY the ATU-C shall enter the state C-REVERB4.

10.7 Channel analysis (ATU-R)

During channel analysis there are two situations where the ATU-R will reset itself to R-SILENT0 (see Recommendation G.994.1): a timeout and a detected error in the received control data. A timeout occurs if the time in R-REVERB3 exceeds the limit of 4000 symbols. Also, if any C-CRC checksum indicates there is an error in the received control data, then it shall trigger a reset to R-SILENT0 (see Recommendation G.994.1).

10.7.1 R-SEGUE1

R-SEGUE1 is generated from a tone-by-tone 180 degree phase reversal of R-REVERB1 (i.e. + maps to –, and – maps to ++, for each of the 4-QAM signal constellation). The duration of R-SEGUE1 is 10-symbol periods. Following R-SEGUE1 the ATU-R shall enter state R-REVERB3.

10.7.2 R-REVERB3

R-REVERB3 is similar to R-REVERB1 (see 10.5.2); the only difference is that R-REVERB3 is the first ATU-R signal with the addition of a cyclic prefix to every symbol (defined in 8.11.4). The duration of R-REVERB3 is not fixed but has a maximum of 4000 symbols. If C-CRC2 is not detected within 4000 symbols, the ATU-R shall timeout and reset to R-SILENT0 (see Recommendation G.994.1). After detection of C-RATES1 through C-CRC2, the ATU-R shall continue to send R-REVERB3 for 20 additional symbols before entering R-SEGUE2.

10.7.3 R-SEGUE2

The signal R-SEGUE2 is similar to R-SEGUE1 (see 10.7.1); the only difference is the addition of the cyclic prefix. Following R-SEGUE2 the ATU-R shall enter state R-RATES1.

10.7.4 R-RATES1

See Table 10-8.

Table 10-8/G.992.1 – R-RATES1

	Prefix	Option 1			Option 2			Option 3			Option 4		
		B_F	B_I	*RRSI*	B_F	B_I	*RRSI*	B_F	B_I	*RRSI*	B_F	B_I	*RRSI*
Number of bytes	4	3	3	5	3	3	5	3	3	5	3	3	5

The purpose of R-RATES1 for the upstream channel is the same as that of C-RATES1 for the downstream channel (see 10.6.2). Each option consists of three fields:

- B_F lists the number of bytes in the fast buffer for each of LS0, LS1, LS2, in that order; B_F has a total of 24 (= 3 × 8) bits. The first 8 bits of B_F specify the number of bytes in LS0, the second 8 bits specify the number of bytes in LS1, and so on. Each byte of B_F is transmitted with least significant bit first;
- B_I similarly lists the number of bytes in the interleaved buffer;
- {RS_F, RS_I, S, I, FS(LS2)} is a five-byte quantity comprising:
  - RS_F, the number of parity bytes per symbol in the fast buffer (upstream);
  - RS_I, the number of parity bytes per symbol in the interleave buffer (upstream);
  - S, the number of symbols per codeword (upstream);
  - I, the interleave depth (upstream) in codewords for the interleave buffer;

IPR2025-00395
Petitioners' Exhibit 1011
Page 113 of 256

– FS(LS2) is a field of eight zeros.

The four options are transmitted in order of decreasing preference. For the present system, ATU-C has control over all the data rates, so R-RATES1 is copied from the appropriate fields of C-RATES1.

Only one bit of information is transmitted during each symbol period of R-RATES1: a zero bit is encoded to one symbol of R-REVERB1 and a one bit is encoded to one symbol of R-SEGUE1 (with addition of cyclic prefix). Since there are a total of 384 bits of RATES1 information, the length of R-RATES1 is 384 symbols. The 384 bits are to be transmitted in the order shown in Table 10-8, with the least significant bit first. That is, the least significant bit of option 1, B_F (see Table 10-8), is to be transmitted during the 33rd symbol of R-RATES1, after the prefix. Following R-RATES1, the ATU-R shall enter state R-CRC1.

10.7.5 R-CRC1

R-CRC1 is a cyclic redundancy check intended for detection of an error in the reception of R-RATES1 at the ATU-C. The CRC polynomial c(D) and generator polynomial g(D) are the same as for C-CRC1 (see 10.6.3). The 16 bits c_0 to c_{15} are transmitted (c_0 first and c_{15} last) in 16-symbol periods using the same method as R-RATES1 (see 10.7.4). Following R-CRC1, the ATU-R shall enter state R-MSG1.

10.7.6 R-MSG1

R-MSG1 transmits a 48-bit message signal to the ATU-C. This message includes vendor identification, trellis code option, echo canceller option, etc. The message, *m*, is defined by:

$$m = \{m_{47}, m_{46}, \ldots, m_1, m_0\} \tag{10-7}$$

with m_0, the least significant bit, being transmitted first. The message components are defined in the following subclauses, and their assigned positions within the composite message, *m*, are defined in Table 10-9.

A total of 48-symbol periods are used to communicate the 48-bit message, using the encoding method described in 10.7.4. Following R-MSG1, the ATU-R shall enter signalling state R-CRC2.

Table 10-9/G.992.1 – Assignment of 48 bits of R-MSG1

Suffix(ces) of m_i (Note 1)	Parameter (Note 2)
47-18	Reserved for future use
17	Trellis coding option
16	Overlapped spectrum option (Note 3)
15	Unused (shall be set to "1")
14	Support of higher bit rates (S = 1/2) (see 7.6.3)
13	Support of dual latency downstream
12	Support of dual latency upstream
11	Network Timing Reference
10, 9	Framing mode

IPR2025-00395
Petitioners' Exhibit 1011
Page 114 of 256

Table 10-9/G.992.1 – Assignment of 48 bits of R-MSG1 *(concluded)*

Suffix(ces) of m_i (Note 1)	Parameter (Note 2)
8-4	Reserved for future use
3-0	Maximum numbers of bits per subcarrier supported
NOTE 1 – Within the separate fields the least significant bits have the lowest subscripts. NOTE 2 – All reserved bits shall be set to "0". NOTE 3 – The initialization sequence allows for interworking of overlapped and non-overlapped spectrum implementations. Therefore, this indication is for information only.	

10.7.6.1 Trellis coding option – Bit 17

$m_{17} = 0$ indicates no trellis coding capability; $m_{17} = 1$ indicates trellis coding capability.

10.7.6.2 Echo cancellation option – Bit 16

$m_{16} = 0$ indicates no echo cancellation; $m_{16} = 1$ indicates echo cancellation.

10.7.6.3 Unused – Bit 15

m_{15} shall be set to "1".

10.7.6.4 Framing Mode – Bits 10, 9

m_{10} and m_9 are used by the ATU-R to indicate which of the four framing structures is to be used (see 8.4). The lowest framing structure indicated by the ATU-C or ATU-R shall be used.

10.7.6.5 Network timing reference – Bit 4

$m_4 = 1$ indicates the ATU-R supports reconstruction of the network timing reference from the downstream indicator bits 23-20.

10.7.6.6 Maximum numbers of bits per subcarrier supported – Bits 3-0

The N_{upmax} (transmit) capability is encoded onto $\{m_3, ..., m_0\}$ with a conventional binary representation (e.g. $1101_2 = 13$).

NOTE – The maximum number of bits for the downstream data, N_{downmax}, that the ATU-R receiver can support need not be signalled to the ATU-C; it will be implicit in the bits and gains message, R-B&G, which is transmitted after channel analysis.

10.7.7 R-CRC2

R-CRC2 is a cyclic redundancy check for detection of errors in the reception of R-MSG1 at the ATU-C. The CRC generator polynomial is as defined in 10.7.5. The CRC message polynomial is as constructed in 10.7.5, with m_0 corresponding to a_0 and m_{47} corresponding to a_{47}. The CRC check polynomial is generated in exactly the same way as described in 10.7.5. These 16 bits are transmitted in 16-symbol periods using the method described in 10.7.5. Following R-CRC2, the ATU-R shall enter state R-MEDLEY.

10.7.8 R-MEDLEY

R-MEDLEY is a wideband pseudo-random signal used for estimation of the upstream SNR at the ATU-C. The data to be transmitted are derived from the pseudo-random sequence PRU defined in 10.5.2. In contrast to R-REVERB1, however, the cyclic prefix is used and the data sequence continues from one symbol to the next (i.e. d_1 to d_6 are not re-initialized for each symbol). Because the sequence is of length 63, and 64 bits are used for each symbol, the subcarrier vector for

IPR2025-00395
Petitioners' Exhibit 1011
Page 115 of 256

R-MEDLEY changes from one symbol period to the next. R-MEDLEY is transmitted for 16 384 symbol periods. Following R-MEDLEY the ATU-R enters signalling state R-REVERB4.

For Annex B, see B.3.8.

For Annex C, see C.7.8.3.

10.7.9 R-REVERB4

R-REVERB4 is the same as R-REVERB3 (see 10.7.2). The duration of R-REVERB4 is 128 symbols. This signal marks the end of channel analysis, and R-SEGUE3 immediately follows R-REVERB4.

IPR2025-00395
Petitioners' Exhibit 1011
Page 116 of 256

10.8 Exchange – ATU-C

The timing diagram of exchange is shown in Figure 10-4.

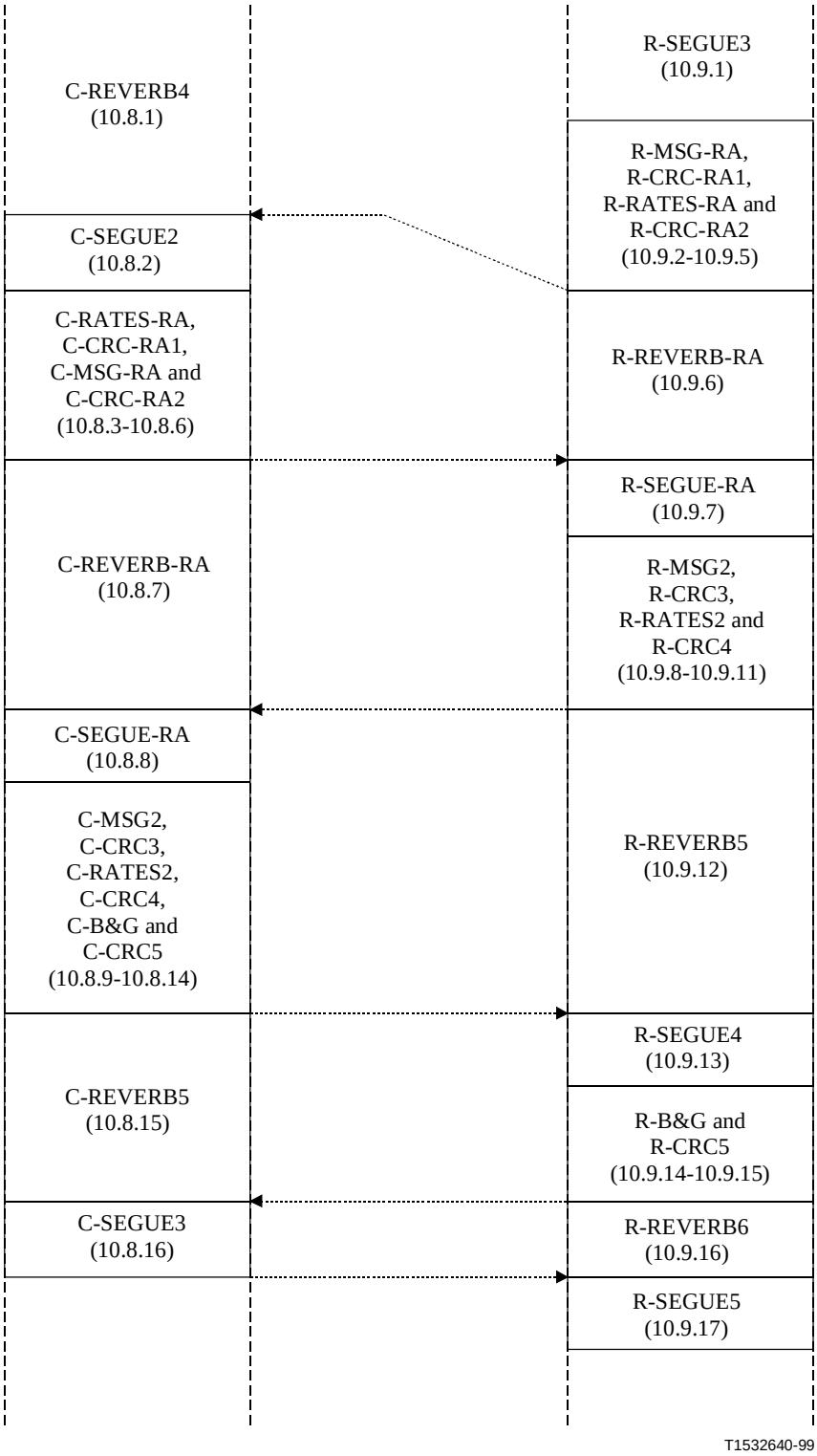

Figure 10-4/G.992.1 – Timing diagram of exchange

IPR2025-00395
Petitioners' Exhibit 1011
Page 117 of 256

During exchange there are two events that shall cause the ATU-C to reset to C-SILENT1 (see Recommendation G.994.1): timeouts and error detection by a CRC checksum. The exchange procedure is partly synchronized between ATU-C and ATU-R, and partly interactive. During the interactive part (C-REVERB4, C-REVERB5, C-REVERB-RA) a timeout shall occur when the time in the C-REVERB4 state exceeds 6000 symbols or when the time in C-REVERB-RA or C-REVERB5 state exceeds 4000 symbols.

10.8.1 C-REVERB4

C-REVERB4 is similar to C-REVERB2 (see 10.4.8), the only difference being the addition of a cyclic prefix on every symbol, and a maximum duration of 6000 symbols. C-REVERB4 continues into the exchange procedure, and its duration is not fixed. The timeout features of C-REVERB4 are defined in 10.8.4.

If the ATU-C does not detect R-CRC-RA2 within 6000 symbols, it shall timeout and reset to C-SILENT1 (see Recommendation G.994.1). After detection of R-SEGUE3 through R-CRC-RA2, the ATU-C shall continue to transmit C-REVERB4 for another 80 symbols before progressing to state C-SEGUE2.

10.8.2 C-SEGUE2

The signal C-SEGUE2 is the same as C-SEGUE1 (see 10.6.1), the only difference is the addition of the cyclic prefix. The duration of C-SEGUE2 is 10 symbol periods. Following C-SEGUE2 the ATU-C shall enter state C-RATES-RA to begin a second exchange of rates.

10.8.3 C-RATES-RA

C-RATES-RA is used to send four new options for transport configuration for both upstream and downstream. C-RATES-RA content is not constrained by previous messages (e.g. C-RATES1 and R-MSG-RA).

These options will, in general, be closer to the optimum bit rate for the channel than those in C-RATES1, and should be based on the channel information received in R-MSG-RA.

The format of C-RATES-RA is the same as that of C-RATES1, except that the 4-byte prefix ($55\ 55\ 55\ 55_{16}$) is not transmitted, and the signal is transmitted eight bits per symbol, as defined for C-MSG2 (see 10.8.9). The duration of C-RATES-RA is 120 symbols.

The $\{RS_F, RS_I, S, I, FS(\text{LS2})\}$ shall have an extended syntax (compared to C-RATES1). It is a ten-byte quantity comprising (one byte each):

- the RS_F field, containing RS_F, the number of parity bytes per symbol in the downstream fast buffer in bits 5 (MSB) to 0 (LSB) with RS_F equal to R_F (R_F is defined in 7.4.1.2.1);
- the RS_I field, containing:
  - the value of RS_I, the number of parity bytes per symbol in the downstream interleave buffer, in bits 5 (MSB) to 0 (LSB), with RS_I equal to R_I/S (R_I and S are defined in 7.4.1.2.2); and;
  - the most significant bit B_8 of B_I (AS0), the number of payload bytes in the AS0 bearer channel in the downstream interleave buffer, in bit 7;

IPR2025-00395
Petitioners' Exhibit 1011
Page 118 of 256

- the *S* field, containing:
  - the value of *S*, the number of downstream symbols per codeword (downstream) in bits 5 (MSB) to 0 (LSB). The necessity to use S = 1/2 would be indicated by $K_I + R_I > 255$ (see 7.4.1.2.2 and 7.6.4). Nevertheless, the *S* field bits 5-0 shall be coded $\{000000_2\}$ to indicate S = 1/2;
  - the two most significant bits, I_9 and I_8, of the downstream interleave depth in codewords, *I*, in bits 7 and 6;
- the *I* field, containing the eight least significant bits I_7 to I_0 of the downstream interleave depth in codewords;
- the *FS(LS2)* field, containing eight zero bits;
- the same five quantities $\{RS_F, RS_I, S, I, FS(\mathrm{LS2})\}$ in the upstream direction (one-byte each, in that order).

The four options are transmitted in order of decreasing preference. Table 10-10 summarizes C-RATES-RA and Table 10-11 summarizes the RRSI fields.

Table 10-10/G.992.1 – C-RATES-RA

	Option 1			**Option 2**			**Option 3**			**Option 4**		
	B_F	B_I	*RRSI*	B_F	B_I	*RRSI*	B_F	B_I	*RRSI*	B_F	B_I	*RRSI*
Number of bytes	10	10	10	10	10	10	10	10	10	10	10	10

Table 10-11/G.992.1 – RRSI fields of C-RATES-RA

	←——— bits ———→							
fields	7	6	5	4	3	2	1	0
RS_F	0	0	value of RS_F MSB					LSB
RS_I	B_8 (AS0)	0	value of RS_I MSB					LSB
S	I_9	I_8	value of S MSB					LSB
I	I_7	I_6	I_5	I_4	I_3	I_2	I_1	I_0
FS(LS2)	value of FS(LS2) *set to* $\{00000000_2\}$							

10.8.4 C-CRC-RA1

C-CRC-RA1 is a cyclic redundancy check for detection of errors in the reception of C-RATES-RA at the ATU-R. Its relation to C-RATES-RA1 is the same as that of C-CRC3 to C-MSG2 (see 10.8.10). Its 16 bits shall be transmitted in 2 symbols (see 10.8.9). Following C-CRC-RA1, the ATU-C shall enter state C-MSG-RA.

IPR2025-00395
Petitioners' Exhibit 1011
Page 119 of 256

10.8.5 C-MSG-RA

C-MSG-RA is the same in format as C-MSG1; the bit assignment is as shown in Table 10-12.

Table 10-12/G.992.1 –Assignment of 48 bits of C-MSG-RA

Suffix(ces) of m_i (Note 1)	Parameter (Note 2)
47-44	New minimum required downstream ATU-R noise margin at initialization
43-38	Minimum required downstream ATU-R noise margin in steady state (–32 to +31 dB)
37-32	Maximum allowed downstream ATU-R noise margin at initialization and in steady state (–32 to +31 dB)
31-0	Reserved for future use

NOTE 1 – Within the separate fields the least significant bits have the lowest subscripts.

NOTE 2 – All reserved bits shall be set to "0".

NOTE 3 – Minimum and maximum values are defined in Recommendation G.997.1.

NOTE 4 – Only the minimum and maximum downstream ATU-R noise margins are communicated to the ATU-R. This information is needed for the downstream B&G table calculation at the ATU-R. The minimum and maximum upstream ATU-C noise margins are used locally at the ATU-C for the upstream B&G table calculation.

The 48 bits are transmitted in 6 symbols (see 10.8.9). Following C-MSG-RA the ATU-C shall enter state C-CRC-RA2.

10.8.6 C-CRC-RA2

C-CRC-RA2 is a cyclic redundancy check for detection of errors in the reception of C-MSG-RA at the ATU-R. Its relation to C-MSG-RA is the same as that of C-CRC3 to C-MSG2 (see 10.8.10). Its 16 bits shall be transmitted in 2 symbols (see 10.8.5). Following C-CRC-RA2, the ATU-C shall enter state C-REVERB-RA.

10.8.7 C-REVERB-RA

C-REVERB-RA is the same as C-REVERB4. If, however, the ATU-C does not detect R-SEGUE-RA within 4000 symbols it shall timeout and reset to C-SILENT1 (see Recommendation G.994.1). After detection of R-CRC4, the ATU-C shall continue to transmit C-REVERB-RA for at least another 80 symbols before moving to state C-SEGUE-RA.

10.8.8 C-SEGUE-RA

C-SEGUE-RA is the same as C-SEGUE2. Following C-SEGUE-RA the ATU-C shall enter state C-MSG2.

10.8.9 C-MSG2

C-MSG2 transmits a 32-bit message signal to the ATU-R. This message includes the total number of bits per symbol supported, the estimated upstream loop attenuation, and the performance margin with the selected rate option. The message, m, is defined by:

$$m = \{m_{31}, m_{30}, ..., m_1, m_0\} \tag{10-8}$$

with m_0 being transmitted first. The message components are defined in the following subclauses, and their assigned positions within the composite message, m, are defined in Table 10-13.

IPR2025-00395
Petitioners' Exhibit 1011
Page 120 of 256

Table 10-13/G.992.1 – Assignment of 32 bits of C-MSG2

Suffix(ces) of m_i (Note 1)	Parameter (Note 2)
31-26	Estimated average loop attenuation
25-21	Reserved for future use
20-16	Performance margin with selected rate option
15-9	Reserved for future use
8-0	Total number of bits supported
NOTE 1 – Within the separate fields the least significant bits have the lowest subscripts. NOTE 2 – All reserved bits shall be set to "0".	

A total of 4-symbol periods are used to communicate the 32-bit message, with 8 bits transmitted on each symbol. Two bits are encoded onto each of the subcarriers numbered $n_{1C\text{-}MSG2}$ through ($n_{1C\text{-}MSG2}$ + 3) using the 4-QAM constellation labelling given in 7.11.3 (for the synchronization symbol) and 10.4.5 (for C-REVERB1). The same two bits are also encoded in the same way onto a set of backup carriers, namely, subcarriers $n_{2C\text{-}MSG2}$ through ($n_{2C\text{-}MSG2}$ + 3). The least significant byte of the message is transmitted in the first symbol of C-MSG2, with the two least significant bits of each byte encoded onto carriers $n_{1C\text{-}MSG2}$ and $n_{2C\text{-}MSG2}$. In addition, the pilot, subcarrier $n_{C\text{-}PILOT1}$, shall be modulated with (+,+). Following C-MSG2, the ATU-C shall enter signalling state C-CRC3.

$n_{1C\text{-}MSG2}$ and $n_{2C\text{-}MSG2}$ shall be used as defined in Annexes A, B and C.

For Annex A, see A.3.8.

For Annex B, see B.3.9.

For Annex C, see C.7.9.1.

10.8.9.1 Estimated average upstream loop attenuation

During channel analysis the ATU-C receiver estimates the upstream channel gain of each subcarrier in preparation for computing the SNR for each tone; it shall also calculate the average loop attenuation. This attenuation is defined as the difference between the total maximum transmit power (as defined in A.2.4.3.3 for Annexes A and C, and in B.2.2.3.2 for Annex B) and the total received power, rounded to the nearest 0.5 dB.

For Annexes A and C, see A.3.2.

For Annex B, see B.3.4.

The attenuation is encoded into bits 31-26 of C-MSG2 as the integer binary representation of twice the attenuation (e.g. if the average attenuation is 21.5 dB then $\{m_{31}, ..., m_{26}\} = 101011_2$).

10.8.9.2 Performance margin with selected rate option

The ATU-C receiver shall select one of the rates options sent from the ATU-C during C-RATES-RA with a satisfactory upstream performance margin. This selected option is encoded in C-RATES2. This margin (rounded to the nearest dB) is encoded into bits 20-16 of C-MSG2 using a conventional binary representation (e.g. if the margin is 9 dB then $\{m_{20}, ..., m_{16}\} = 01001_2$).

10.8.9.3 Total number of bits per symbol supported

The ATU-C receiver shall also calculate the maximum number of bits per symbol that the upstream channel can support with the performance margin defined in C-MSG-RA at an error rate of 10^{-7}. This number is encoded into bits 8-0 using a conventional binary representation [e.g. if the

IPR2025-00395
Petitioners' Exhibit 1011
Page 121 of 256

maximum number of bits that can be supported is 127 (data rate = 508 kbit/s), $\{m_8, ..., m_0\} = 001111111_2$].

10.8.10 C-CRC3

C-CRC3 is a cyclic redundancy check for detection of errors in the reception of C-MSG2 at the ATU-R. The CRC polynomial c(D) and generator polynomial g(D) are the same as for C-CRC1, as defined in 10.6.3. These 16 bits shall be transmitted in 2-symbol periods using the method described in 10.8.9. Following C-CRC3, the ATU-C shall enter state C-RATES2.

10.8.11 C-RATES2

C-RATES2 is the reply to R-RATES-RA. It combines the selected downstream option with the selected upstream option. It thus transmits the final decision on the rates that will be used in both directions.

The ATU-C shall not change the downstream option from that selected in R-RATES2.

The length of C-RATES2 is 8 bits, and the bit pattern for C-RATES2 is shown in Table 10-14. Other bit patterns that are not specified in the table are reserved for future use. If none of the options requested during C-RATES1 or C-RATES-RA can be implemented, ATU-C then returns to C-SILENT1 (see Recommendation G.994.1) for retraining. One symbol period is used to transmit these 8 bits using the method described in 10.8.9. Following C-RATES2, the ATU-C shall enter signalling state C-CRC4.

Table 10-14/G.992.1 – Bit pattern for C-RATES2

(Downstream, upstream)	Bit pattern for C-RATES2 (MSB first) (Note)
(option 1, option 1)	00010001_2
(option 1, option 2)	00010010_2
(option 1, option 3)	00010100_2
(option 1, option 4)	00011000_2
(option 2, option 1)	00100001_2
(option 2, option 2)	00100010_2
(option 2, option 3)	00100100_2
(option 2, option 4)	00101000_2
(option 3, option 1)	01000001_2
(option 3, option 2)	01000010_2
(option 3, option 3)	01000100_2
(option 3, option 4)	01001000_2
(option 4, option 1)	10000001_2
(option 4, option 2)	10000010_2
(option 4, option 3)	10000100_2
(option 4, option 4)	10001000_2
All options fail	00000000_2
NOTE – All other bit patterns that are not shown are reserved for future use.	

IPR2025-00395
Petitioners' Exhibit 1011
Page 122 of 256

10.8.12 C-CRC4

C-CRC4 is a cyclic redundancy check for detection of errors in the reception of C-RATES2 at the ATU-R. Its relation to C-RATES2 is the same as that of C-CRC3 to C-MSG2. Its 16 bits shall be transmitted in 2 symbols (see 10.8.11). Following C-CRC4, the ATU-C shall enter state C-B&G.

10.8.13 C-B&G

For Annex B, see B.3.12.

For Annex C, see C.7.9.2.

C-B&G shall be used to transmit to the ATU-R the bits and gains information, $\{b_1, g_1, b_2, g_2, \ldots, b_{31}, g_{31}\}$, that are to be used on the upstream carriers. b_i indicates the number of bits to be coded by the ATU-R transmitter onto the ith upstream carrier; g_i indicates the scale factor, relative to the gain that was used for that carrier during the transmission of R-MEDLEY, that shall be applied to the ith upstream carrier. Because no bits or energy will be transmitted at DC or one-half the sampling rate, b_0, g_0, b_{32}, and g_{32} are all presumed to be zero and shall not be transmitted.

Each b_i shall be represented as an unsigned 4-bit integer, with valid b_is lying in the range of zero to N_{upmax}, the maximum number of bits that the ATU-R is prepared to modulate onto any subcarrier, which is communicated in R-MSG1.

Each g_i shall be represented as an unsigned 12-bit fixed-point quantity, with the binary point assumed just to the right of the third most significant bit. For example, a g_i with binary representation (most significant bit listed first) 001.010000000_2 would instruct the ATU-R to scale the constellation for carrier i, by a gain factor of 1.25, so that the power in that carrier shall be 1.94 dB higher than it was during R-MEDLEY.

For subcarriers on which no data are to be transmitted, and the receiver will never allocate bits (e.g. out-of-band subcarriers) both b_i and g_i shall be set to zero (0000_2 and $00000000\ 0000_2$, respectively). For subcarriers on which no data are to be currently transmitted, but the receiver may allocate bits later (e.g. as a result of an SNR improvement), the b_i shall be set to zero and the g_i to a value in the 0.19 to 1.33 range (000.001100000_2 to 001.010101011_2).

The C-B&G information shall be mapped in a 496-bit (62 byte) message m defined by:

$$m = \{m_{495}, m_{494}, \ldots, m_1, m_0\} = \{g_{31}, b_{31}, \ldots, g_1, b_1\}, \qquad (10\text{-}9)$$

with the MSB of b_i and g_i in the higher m index and m_0 being transmitted first. The message m shall be transmitted in 62 symbols, using the transmission method as described in 10.8.9.

Following C-B&G, the ATU-C shall enter the state C-CRC5.

10.8.14 C-CRC5

C-CRC5 is a cyclic redundancy check for detection of errors in the reception of C-B&G at the ATU-R. Its relation to C-B&G is the same as that of C-CRC3 to C-MSG2. Its 16 bits shall be transmitted in 2 symbols (see 10.8.9). Following C-CRC5, the ATU-C shall enter state C-REVERB5.

10.8.15 C-REVERB5

C-REVERB5 is the same as C-REVERB4 (see 10.8.1). The only difference is the maximum duration of 4000 symbols. The duration of C-REVERB5 depends upon the state of the ATU-R and the internal processing of the ATU-C. The ATU-C shall transmit C-REVERB5 until it has received, checked the reliability of, and established in the ATU-C transmitter, the downstream bits and gains information contained in R-B&G. If bits and gains information is not received, checked and

IPR2025-00395
Petitioners' Exhibit 1011
Page 123 of 256

established within 4000 symbols, the ATU-C shall timeout and reset to C-SILENT1 (see Recommendation G.994.1). The ATU-C shall enter state C-SEGUE3 as soon as it is prepared to transmit according to the conditions specified in R-B&G.

10.8.16 C-SEGUE3

C-SEGUE3 is used to notify the ATU-R that the ATU-C is about to enter the steady-state signalling state C-SHOWTIME. The signal C-SEGUE3 is the same as C-SEGUE2 (see 10.8.2). The duration of C-SEGUE3 is 10 symbol periods. Following C-SEGUE3 the ATU-C has completed initialization and shall enter state C-SHOWTIME.

10.9 Exchange – ATU-R

During exchange there are two cases when the ATU-R shall reset itself: timeouts and error detection by a CRC checksum. Both shall trigger a reset to R-SILENT0 (see Recommendation G.994.1). The exchange procedure is partly synchronized between ATU-C and ATU-R, and partly interactive. During the interactive parts (R-REVERB-RA, R-REVERB5 and R-REVERB6) a timeout shall occur when the time in either state exceeds 4000 symbols.

10.9.1 R-SEGUE3

The signal R-SEGUE3 is the same as R-SEGUE2 (see 10.7.3). The duration of R-SEGUE3 is 10 symbol periods. Following R-SEGUE3 the ATU-R shall enter state R-MSG-RA to begin a second exchange of rates.

10.9.2 R-MSG-RA

R-MSG-RA is similar to R-MSG2, but expanded by 80 bits. The bit assignments are as shown in Table 10-15.

Table 10-15/G.992.1 – Assignment of 80 bits of R-MSG-RA

Suffix(ces) of m_i (Note 1)	Parameter (Note 2)
79-56	Reserved for future use
55-49	Number of RS overhead bytes, (R)
48-40	Number of RS payload bytes, (K)
39-32	Number of tones carrying data (ncloaded)
31-25	Estimated average loop attenuation
24-21	Coding gain
20-16	Performance margin with selected rate option
15-14	Reserved for future use
13-12	Maximum Interleave Depth
11-0	Total number of bits per DMT symbol, B_{max}
NOTE 1 – Within the separate fields the least significant bits have the lowest subscripts. NOTE 2 – All reserved bits shall be set to "0".	

For Annex C, see C.7.10.1.

10.9.2.1 Number or RS overhead bytes (R)

This is the R (R_I or R_F, as defined in 7.4.1.2) parameter used to calculate B_{max}.

This parameter shall be calculated assuming single latency operation with $S \leq 1$.

IPR2025-00395
Petitioners' Exhibit 1011
Page 124 of 256

10.9.2.2 Number of RS payload bytes (K)

This is the K (K_I or K_F, as defined in 7.4.1.2) parameter used to calculate B_{max}.

This parameter shall be calculated assuming single latency operation with $S \leq 1$.

10.9.2.3 Number or tones carrying data (ncloaded)

This is the number of subcarriers with $b_i > 0$ used to calculate B_{max}.

10.9.2.4 Estimated average loop attenuation

This parameter shall be defined as in R-MSG2, see 10.9.8.

10.9.2.5 Coding gain

The coding gain of RS FEC and trellis coding as used to calculate B_{max}.

The coding gain is expressed in steps of 0.5 dB in the 0 to 7.5 dB range.

10.9.2.6 Performance margin with selected rate option

This parameter shall be defined as in R-MSG2, see 10.9.8. If R-RATES-RA indicates "no option selected", then this parameter shall be set to "0" or reflect the performance margin in dB corresponding to B_{max} (which may be 0 to 3 dB above the minimum requested SNR margin).

10.9.2.7 Maximum Interleaving Depth

This parameter shall reflect the maximum interleaving depth supported by the ATU-R receiver as defined in Table 10-16.

Table 10-16/G.992.1 – Bit settings for Maximum Interleaving Depth

Bit 13	Bit 12	D_{max}
0	0	64 (mandatory)
0	1	128 (optional)
1	0	256 (optional)
1	1	512 (optional)

10.9.2.8 Total number of bits supported (B_{max})

This parameter shall be defined as in R-MSG2, see 10.9.8. If both ATU-C and ATU-R support trellis coding, then trellis coding shall be assumed when calculating B_{max}.

The following relationship exists between B_{max}, ncloaded, K and R:

With trellis coding $B_{max} = 8 \times (K + R/S) + \text{roundup}(ncloaded/2) + 4 = \Sigma\, b_i$

Without trellis coding $B_{max} = 8 \times (K + R/S) = \Sigma\, b_i$

For Annex C, see C.7.10.1.1.

10.9.3 R-CRC-RA1

R-CRC-RA1 is a cyclic redundancy check for detection of errors in the reception of R-MSG-RA. Its relation to R-MSG-RA is the same as that of R-CRC3 to R-MSG2. Following R-CRC-RA1, the ATU-R shall enter state R-RATES-RA.

IPR2025-00395
Petitioners' Exhibit 1011
Page 125 of 256

10.9.4 R-RATES-RA

R-RATES-RA is the reply to C-RATES1 based on the results of the downstream channel analysis and is similar to R-RATES2. Instead of listing the B_F, B_I as in C-RATES1, the ATU-R does one of the following:

- sends back only the option number of the highest data rate that can be supported based on the measured SNR of the downstream channel (not taking into account impulse noise resilience);
- indicates that no option selection was made at this time, but will be made later based on C-RATES-RA information;
- indicates none of the options requested during C-RATES1 can be implemented.

As in R-RATES2, 4 bits are used for the option number. A total of 8 bits are used for R-RATES-RA, and the bit patterns are shown in Table 10-17. Other bit patterns that are not specified in the table are reserved for future use. One symbol period is used to transmit these 8 bits using the method described in 10.9.8. Following R-RATES-RA, the ATU-R shall enter state R-CRC-RA2.

The format of R-RATES-RA is the same as R-RATES2, except for the additional bit pattern used to indicate "no option selected".

Table 10-17/G.992.1 – Bit pattern for R-RATES-RA

Downstream	Bit pattern for R-RATES-RA (MSB first)
Option 1	00010001_2
Option 2	00100010_2
Option 3	01000100_2
Option 4	10001000_2
No option selected	00000001_2
All options fail	00000000_2
NOTE – All other bit patterns that are not shown are reserved for future use.	

10.9.5 R-CRC-RA2

R-CRC-RA2 is a cyclic redundancy check for detection of errors in the reception of R-RATES-RA. Its relation to R-RATES-RA is the same as that of R-CRC3 to R-MSG2. Following R-CRC-RA2, the ATU-R shall enter state R-REVERB-RA.

10.9.6 R-REVERB-RA

R-REVERB-RA is the same as R-REVERB3 (see 10.7.2). The duration of R-REVERB-RA depends upon the signalling state of the ATU-C and the internal processing of the ATU-R, but has a maximum of 4000 symbols. The ATU-R shall transmit R-REVERB-RA until it has received and checked the reliability of the upstream bits and gains information contained in C-RATES-RA. After the ATU-R has received C-CRC-RA2, it shall continue to transmit R-REVERB-RA for another 64 symbols. It shall then enter R-SEGUE-RA.

If it has not successfully detected all the control signals within 4000 symbols, it shall timeout and reset to R-SILENT0 (see Recommendation G.994.1).

10.9.7 R-SEGUE-RA

R-SEGUE-RA is the same as R-SEGUE4. Following R-SEGUE-RA, the ATU-R shall enter state R-MSG2.

IPR2025-00395
Petitioners' Exhibit 1011
Page 126 of 256

10.9.8 R-MSG2

R-MSG2 transmits a 32-bit message signal to the ATU-C. This message includes the total number of bits per symbol supported, the estimated downstream loop attenuation, and the performance margin with the selected rate option. The message, *m*, is defined by:

$$m = \{m_{31}, m_{30}, ..., m_1, m_0\} \quad (10\text{-}10)$$

with m_0 being transmitted first. The message components are defined in the following subclauses, and their assigned positions within the composite message, *m*, are defined in Table 10-18.

Table 10-18/G.992.1 – Assignment of 32 bits of R-MSG2

Suffix(ces) of m_i (Note 1)	Parameter (Note 2)
31-25	Estimated average loop attenuation
24-21	Reserved for future use
20-16	Performance margin with selected rate option
15-12	Reserved for future use
11-0	Total number of bits supported
NOTE 1 – Within the separate fields the least significant bits have the lowest subscripts. NOTE 2 – All reserved bits shall be set to "0".	

A total of 4 symbol periods are used to communicate the 32-bit message, with 8 bits transmitted on each symbol. Two bits are encoded onto each of the subcarriers numbered $n_{1R\text{-}MSG2}$ through ($n_{1R\text{-}MSG2}$ + 3) using the 4-QAM constellation labelling given in 8.11.3 (for the synchronization symbol) and 10.4.5 (for C-REVERB1). The same two bits are also encoded in the same way onto a set of backup carriers, namely, subcarriers $n_{2R\text{-}MSG2}$ through ($n_{2R\text{-}MSG2}$ + 3). The least significant byte of the message is transmitted in the first symbol of R-MSG2, with the two least significant bits of each byte encoded onto carriers $n_{1R\text{-}MSG2}$ and $n_{2R\text{-}MSG2}$. Following R-MSG2, the ATU-R shall enter state R-CRC3.

$n_{1R\text{-}MSG2}$ and $n_{2R\text{-}MSG2}$ shall be used as defined in Annexes A, B and C.

For Annex A, see A.3.9.

For Annex B, see B.3.10.

For Annex C, see C.7.10.2.

10.9.8.1 Estimated average downstream loop attenuation

During channel analysis the ATU-R receiver estimates the downstream channel gain of each subcarrier in preparation for computing the SNR for each tone; it shall also calculate the average loop attenuation. This attenuation is defined as the difference between ATU-C maximum total transmit power (as defined in A.1.2.3.3 for Annexes A and C, and B.1.3.2.2 for Annex B, taking into account power cut-back) and the total received power, rounded to the nearest 0.5 dB.

For Annexes A and C, see A.3.3.

For Annex B, see B.3.5.

The attenuation is encoded into bits 31-25 of R-MSG2 as the integer binary representation of twice the attenuation [e.g. if the average attenuation is 21.5 dB then $\{m_{31}, ..., m_{25}\} = 0101011_2$].

IPR2025-00395
Petitioners' Exhibit 1011
Page 127 of 256

10.9.8.2 Performance margin with selected rate option

The ATU-R receiver shall select one of the rates options sent from the ATU-C during C-RATES1 or C-RATES-RA with a satisfactory downstream margin. This selected option is encoded in R-RATES2. This margin (rounded to the nearest dB) is encoded into bits 20-16 of R-MSG2 using a conventional binary representation [e.g. if the margin is 9 dB then $\{m_{20}, ..., m_{16}\} = 01001_2$].

10.9.8.3 Total number of bits per symbol supported

The ATU-R receiver shall also calculate the maximum number of bits per symbol that the downstream channel can support with the performance margin defined in C-MSG1 or C-MSG-RA at an error rate of 10^{-7}. This number is encoded into bits 11-0 using a conventional binary representation [e.g. if the maximum number of bits that can be supported is 1724 (data rate = 6896 kbit/s), $\{m_{11}, ..., m_0\} = 11010111100_2$].

For Annex C, see C.7.10.2.1.

10.9.9 R-CRC3

R-CRC3 is a cyclic redundancy check for detection of errors in the reception of R-MSG2 at the ATU-C. The CRC polynomial c(D) and generator polynomial g(D) are as described in 10.6.3. These bits are transmitted in 2 symbol periods using the method described in 10.9.8. Following R-CRC3, the ATU-R shall enter state R-RATES2.

10.9.10 R-RATES2

R-RATES2 is the reply to C-RATES-RA based on the results of the downstream channel analysis. Instead of listing the B_F, B_I as in C-RATES1, the ATU-R sends back only the option number of the selected data rate that can be supported based on the measured SNR of the downstream channel (not taking into account impulse noise resilience). As in C-RATES2, 4 bits are used for the option number. A total of 8 bits are used for R-RATES2, and the bit patterns are shown in Table 10-19. Other bit patterns that are not specified in the table are reserved for future use. If none of the options requested during C-RATES1 can be implemented, ATU-R then returns to R-SILENT0 (see Recommendation G.994.1) for retraining. One symbol period is used to transmit these 8 bits using the method described in 10.9.8. Following R-RATES2, the ATU-R shall enter state R-CRC4.

Table 10-19/G.992.1 – Bit pattern for R-RATES2

Downstream	Bit pattern for R-RATES2 (MSB first)
Option 1	00010001_2
Option 2	00100010_2
Option 3	01000100_2
Option 4	10001000_2
All options fail	00000000_2
NOTE – All other bit patterns that are not shown are reserved for future use.	

If it is determined that none of the four options can be implemented with the connection, the ATU-R shall return to R-SILENT0 (see Recommendation G.994.1) for retraining.

10.9.11 R-CRC4

R-CRC4 is a cyclic redundancy check for detection of errors in the reception of R-RATES2 at the ATU-C. Its relation to R-RATES2 is the same as that of R-CRC3 to R-MSG2. Following R-CRC4, the ATU-R shall enter state R-REVERB5.

IPR2025-00395
Petitioners' Exhibit 1011
Page 128 of 256

10.9.12 R-REVERB5

R-REVERB5 is the same as R-REVERB3 (see 10.7.2). The duration of R-REVERB5 depends upon the signalling state of the ATU-C and the internal processing of the ATU-R, but has a maximum of 4000 symbols. The ATU-R shall transmit R-REVERB5 until it has received and checked the reliability of the upstream bits and gains information contained in C-B&G. After the ATU-R has received C-CRC5, it shall continue to transmit R-REVERB5 for another 64 symbols. It shall then enter R-SEGUE4. If it has not successfully detected all the control signals within 4000 symbols, it shall timeout and reset to R-SILENT0 (see Recommendation G.994.1).

10.9.13 R-SEGUE4

The purpose of R-SEGUE4 is to notify the ATU-C that the ATU-R is about to enter R-B&G. R-SEGUE4 is the same as R-SEGUE3 (see 10.9.1). The duration of R-SEGUE4 is 10 symbol periods. Following R-SEGUE4, the ATU-R shall enter state R-B&G.

10.9.14 R-B&G

The purpose of R-B&G is to transmit to the ATU-C the bits and gains information, $\{b_1, g_1, b_2, g_2, ..., b_{255}, g_{255}\}$, to be used on the downstream subcarriers. b_i indicates the number of bits to be coded by the ATU-C transmitter onto the ith downstream subcarrier; g_i indicates the scale factor that shall be applied to the ith downstream subcarrier, relative to the gain that was used for that carrier during the transmission of C-MEDLEY. Because no bits or energy will be transmitted at DC or one-half the sampling rate, b_0, g_0, b_{256}, and g_{256} are all presumed to be zero, and are not transmitted. Because subcarrier N_{pilot} is reserved as the pilot tone, $b(N_{\text{pilot}})$, shall be set to 0 and $g(N_{\text{pilot}})$ shall be set to g_{sync}. N_{pilot} and g_{sync} are defined in Annexes A, B and C. The value g_{sync} represents the gain scaling applied to the sync symbol.

Each b_i is represented as an unsigned 4-bit integer, with valid b_i lying in the range of zero to N_{downmax}, the maximum number of bits that the ATU-C is prepared to modulate onto any subcarrier, which is communicated in C-MSG1.

Each g_i is represented as an unsigned 12-bit fixed-point quantity, with the binary point assumed just to the right of the third most significant bit. For example, a g_i with binary representation (most significant bit listed first) 001.010000000_2 would instruct the ATU-C to scale the constellation for carrier i by a gain factor of 1.25, so that the power in that carrier shall be 1.94 dB higher than it was during C-MEDLEY.

For subcarriers on which no data are to be transmitted, and the receiver will never allocate bits (e.g. out-of-band subcarriers) both b_{i} and g_{i} shall be set to zero (0000_2 and $00000000\ 0000_2$, respectively). For subcarriers on which no data are to be currently transmitted, but the receiver may allocate bits later (e.g. as a result of an SNR improvement), the b_{i} shall be set to zero and the g_i to a value in the 0.19 to 1.33 range (000.001100000_2 to 001.010101011_2).

The R-B&G information shall be mapped in a 4080-bit (510 byte) message m defined by:

$$m = \{m_{4079}, m_{4078}, \ldots, m_1, m_0\} = \{g_{255}, b_{255}, \ldots, g_1, b_1\}, \qquad (10\text{-}11)$$

with the MSB of b_{i} and g_{i} in the higher m index and m_0 being transmitted first. The message m shall be transmitted in 510 symbols, using the transmission method as described in 10.9.8.

Following R-B&G, the ATU-C shall enter the state R-CRC5.

IPR2025-00395
Petitioners' Exhibit 1011
Page 129 of 256

10.9.15 R-CRC5

R-CRC5 is a cyclic redundancy check for detection of errors in the reception of R-B&G at the ATU-C. Its relation to R-B&G is the same as that of R-CRC3 to R-MSG2. Following R-CRC5, the ATU-R shall enter state R-REVERB6.

10.9.16 R-REVERB6

R-REVERB6 is the same as R-REVERB3 (see 10.7.2). The duration of R-REVERB6 depends upon the signalling state of the ATU-C and the internal processing of the ATU-R, but has a maximum of 4000 symbols. The ATU-R shall transmit R-REVERB6 until it has detected all ten symbols of C-SEGUE3; it shall then enter R-SEGUE5. If it has not successfully detected C-SEGUE3 within 4000 symbols, it shall timeout and reset to R-SILENT0 (see Recommendation G.994.1).

10.9.17 R-SEGUE5

The purpose of R-SEGUE5 is to notify the ATU-C that the ATU-R is about to enter the steady-state signalling state R-SHOWTIME. R-SEGUE5 is identical to R-SEGUE3 (see 10.9.1). The duration of R-SEGUE5 is 10 symbol periods. Following R-SEGUE5, the ATU-R has completed initialization and shall enter state R-SHOWTIME.

10.9.18 Details of Initialization timing

The requirements for the initialization sequence (as defined in 10.1 through 10.9) are shown in Figures 10-5 and 10-6. Figure 10-5 shows the first part of the initialization sequence, up to C-MEDLEY and R-MEDLEY. Figure 10-6 shows the rest of the initialization sequence.

IPR2025-00395
Petitioners' Exhibit 1011
Page 130 of 256

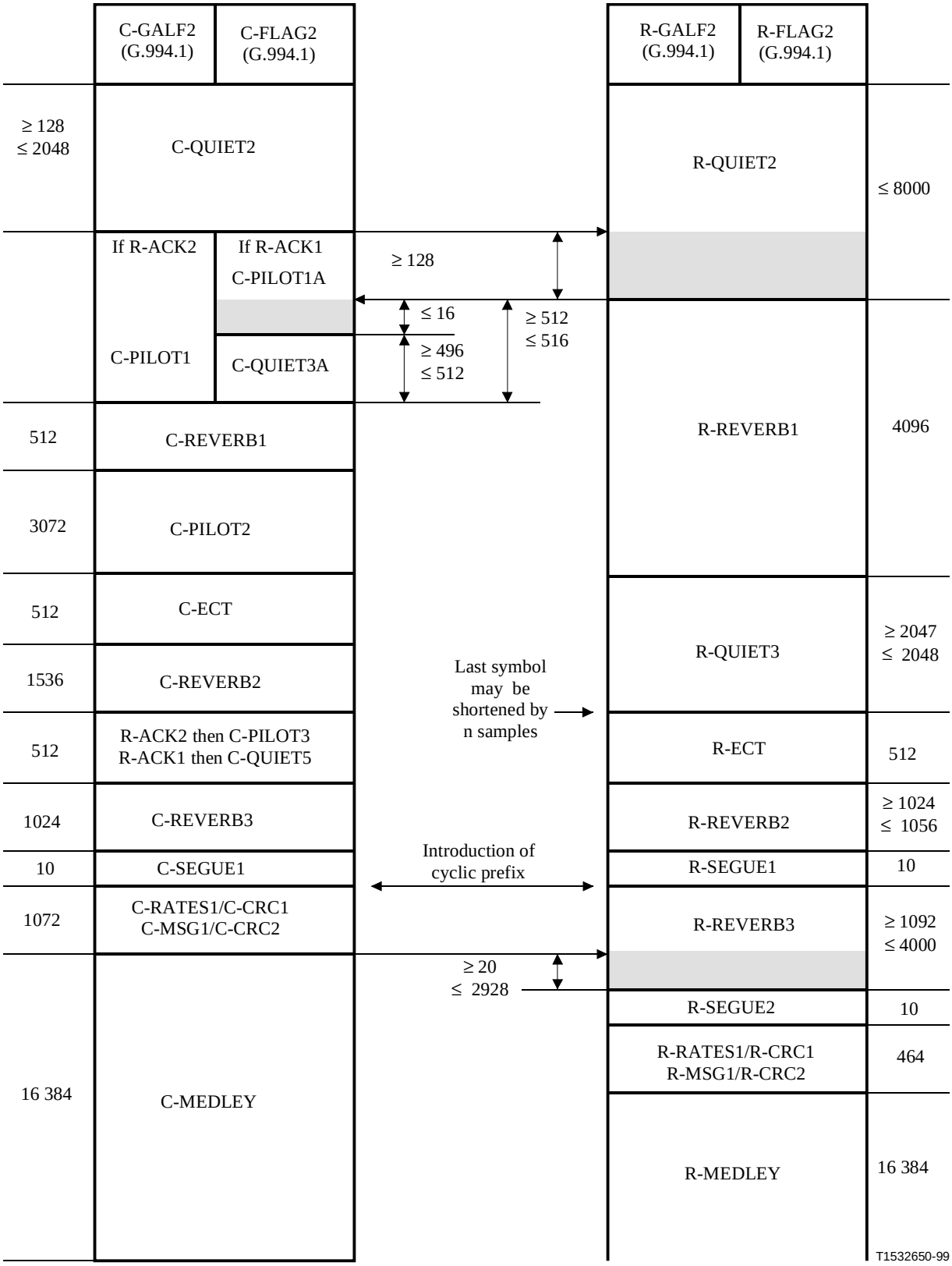

Figure 10-5/G.992.1 – Timing diagram of the initialization sequence – Part 1

IPR2025-00395
Petitioners' Exhibit 1011
Page 131 of 256

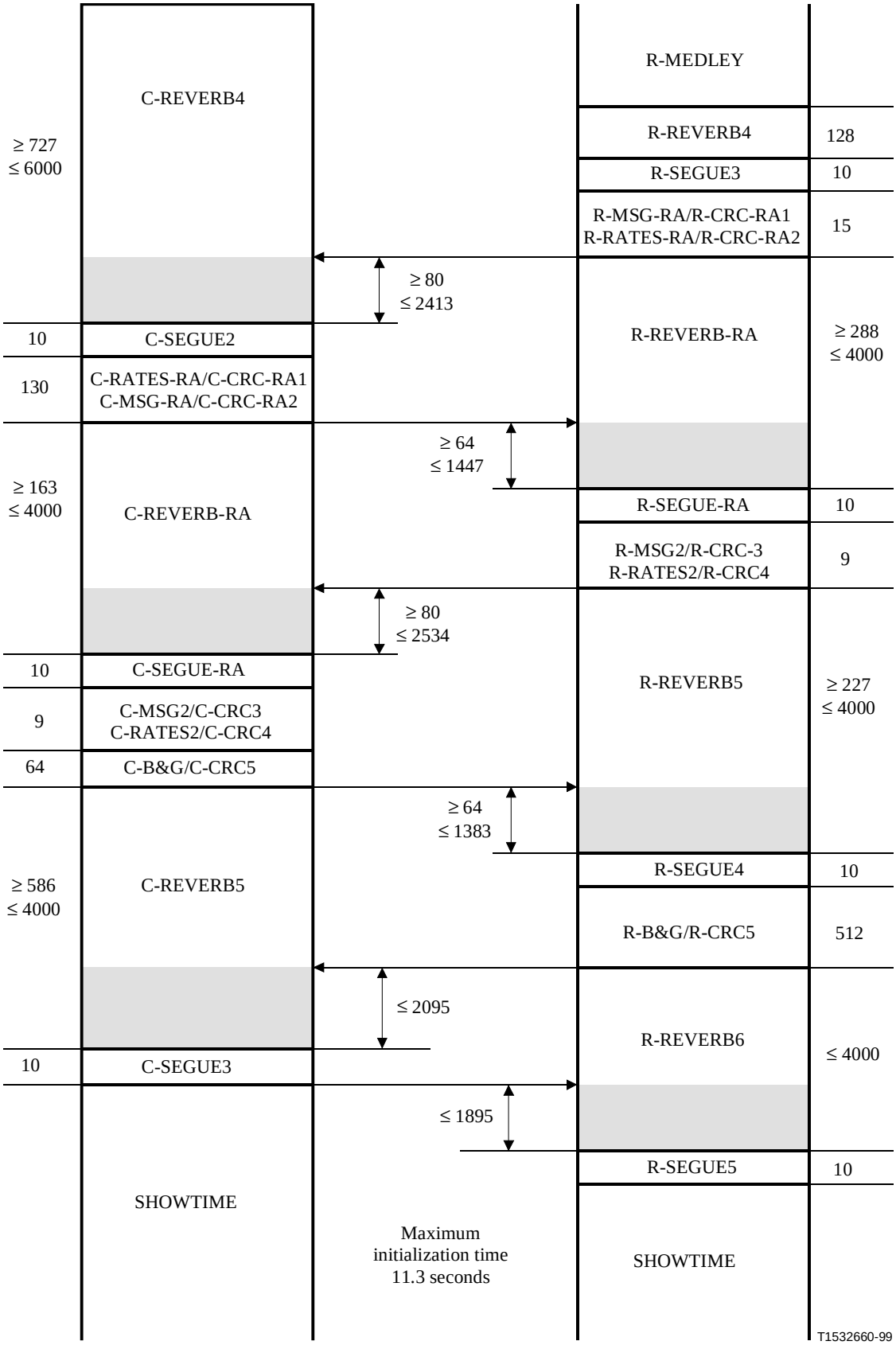

Figure 10-6/G.992.1 – Timing diagram of the initialization sequence – Part 2

IPR2025-00395
Petitioners' Exhibit 1011
Page 132 of 256

11 AOC on-line adaptation and reconfiguration

11.1 The ADSL overhead control (AOC) channel

The AOC data are carried as overhead bytes in the ADSL framing structure. The actual multiplexing of these overhead bytes into the ADSL framing structure depends on the framing structure used (i.e. full overhead or reduced overhead) and on the allocation of any bearer channel to the fast or interleaved data buffer (see 7.4).

11.1.1 AOC message header

The type and length of an AOC message (except for the acknowledge messages) are identified by a byte-length header. In particular, the AOC channel sends the all binary zeros "00000000_2" AOC stuffing pattern in the Idle State, and a valid AOC message always begins with a non-zero byte. Table 11-1 summarizes the current valid AOC message headers. For example, in the case of a bit swap, the AOC header "11111111_2" will be detected, and the next byte of AOC data shall determine whether the message is a bit swap request or a bit swap acknowledge (see 11.2.5). In the case when a function is requested but cannot be performed by either the ATU-C or the ATU-R for any reason (e.g. because the requested b_i value exceeds the maximum number of bits per tone supported), an unable to comply message ("11110000_2") is issued. Future AOC headers can be added when new AOC messages/functions are identified. Also, a block of AOC header values ("$1100xxxx_2$") is set aside for vendor specific AOC messages.

Table 11-1/G.992.1 – AOC message headers

Header	Message length (bytes)	Interpretation
00001111_2	Undefined	Reconfiguration message
$1100xxxx_2$	Undefined	Vendor specific message
11110000_2	1	Unable to comply message (Note)
11111100_2	13	Extended bit swap request message
11111111_2	9	Bit swap request message
11111111_2	3	Bit swap acknowledge message
NOTE – The "unable to comply" message shall consist of a single byte: the header byte.		

The header bytes values are given in binary format (MSB left, LSB right) and represent aoc7-aoc0 bits (MSB in bit 7, LSB in bit 0) as carried in the overhead (see 7.4.1.2 and 8.4.1.2). All other bytes in the AOC message shall be mapped according to the same convention.

11.1.2 AOC protocol

All AOC messages shall be transmitted 5 consecutive times (i.e. 5 concatenated and identical messages without AOC stuffing patterns in between) for extra security. At least 20 AOC stuffing patterns shall be inserted between two consecutive groups of five concatenated and identical messages.

An ATU-x receiving an AOC message shall act on that AOC message only if it has received three identical messages in a time period spanning 5 of that particular message. When an ATU-x receives an unrecognizable command, it shall take no action.

IPR2025-00395
Petitioners' Exhibit 1011
Page 133 of 256

11.2 On-line adaptation – Bit swapping

Bit swapping enables an ADSL system to change the number of bits assigned to a subcarrier, or change the transmit energy of a subcarrier without interrupting data flow.

Either ATU-x may initiate a bit swap; the swapping procedures in the upstream and downstream channels are independent, and may take place simultaneously.

For the bit swap protocol, the "receiver" is the ATU-x that is receiving the data; it transmits a bit swap (extended or simple) request message and receives the bit swap acknowledge message. The "transmitter" is the ATU-x that is transmitting the data; it receives a bit swap request (extended or simple) message and shall transmit the bit swap acknowledge message.

There shall be a maximum of one downstream bit swap request outstanding at any time. There shall be a maximum of one upstream bit swap request outstanding at any time.

11.2.1 Bit swap channel

The bit swap process uses the AOC channel, described in 11.1. All bit swap messages shall be repeated five consecutive times over this channel.

11.2.2 Superframe counting

The transceivers coordinate the bit swaps as follows:

- The ATU-C and ATU-R transmitters shall start their counters immediately after transmitting C-SEGUE3 and R-SEGUE5 (see 10.8.16 and 10.9.17), respectively; this marks the transition between initialization and steady state operation.
- Superframe counting starts with the first superframe at beginning of Showtime being superframe 0.
- Each transmitter shall increment its counter after sending each ADSL superframe (see 7.4.1.1).
- Correspondingly, each receiver shall start its counter immediately after receiving C-SEGUE3 or R-SEGUE5, respectively, and then increment it after receiving each superframe.
- Superframe counting is performed MOD 256.

Synchronization of the corresponding transmitter and receiver superframe counters is maintained using the synchronization symbol in the ADSL frame structure. Any form of restart that requires a transition from initialization to steady state shall reset the superframe counter.

11.2.3 Bit swap request

The receiver shall initiate a bit swap by sending a bit swap request to the transmitter via the AOC channel. This request tells the transmitter which subcarriers are to be modified.

The format of the request is shown in Table 11-2.

Table 11-2/G.992.1 – Format of the bit swap request message

Message header	Message fields 1-4	
$\{11111111_2\}$ (8 bits)	Command (8 bits)	Subchannel index (8 bits)

IPR2025-00395
Petitioners' Exhibit 1011
Page 134 of 256

The request shall comprise nine bytes as follows:

- an AOC message header consisting of 8 binary ones;
- message fields 1-4, each of which consists of an eight-bit command followed by a related eight-bit subchannel index. Valid eight-bit commands for the bit swap message shall be as shown in Table 11-3. The eight-bit subchannel index is counted from low to high frequencies with the lowest frequency subcarrier having the number zero. Subcarrier 0 shall not be used.

Table 11-3/G.992.1 – Bit swap request commands

Value	Interpretation
00000000_2	Do nothing
00000001_2	Increase the number of allocated bits by one
00000010_2	Decrease the number of allocated bits by one
00000011_2	Increase the transmitted power by 1 dB
00000100_2	Increase the transmitted power by 2 dB
00000101_2	Increase the transmitted power by 3 dB
00000110_2	Reduce the transmitted power by 1 dB
00000111_2	Reduce the transmitted power by 2 dB
$00001xxx_2$	Reserved for vendor discretionary commands

The bit swap request message (i.e. header and message fields) shall be transmitted five consecutive times.

To avoid g_i divergence between ATU-C and ATU-R after several bit swaps, for a g_i update of Δ dB the new g_i value should be given by:

$$g_i' = (1/512) \times \text{round}(512 \times g_i \times 10 \exp(\Delta/20)) \qquad (11\text{-}1)$$

11.2.4 Extended bit swap request

Any on-line adaptation may be encoded in an extended bit swap request. However, because a single-bit subcarrier is not allowed, an extended bit swap request containing 6 fields shall be used when decreasing the number of bits on a subcarrier from 2 to 0, or when increasing the number of bits on a subcarrier from 0 to 2. The format of this extended bit swap request is similar to that of the bit swap request (11.2.3), but the number of message fields is increased to 6, and a different message header is used. The format of the request is shown in Table 11-4.

Table 11-4/G.992.1 – Format of the extended bit swap request message

Message header	Message fields 1-6	
$\{11111100_2\}$ (8 bits)	Command (8 bits)	Subchannel index (8 bits)

IPR2025-00395
Petitioners' Exhibit 1011
Page 135 of 256

The receiver shall initiate an extended bit swap by sending an extended bit swap request message to the transmitter. This request tells the transmitter which subcarriers are to be modified. The extended bit swap request message shall comprise 13 bytes as follows:

- An eight-bit extended bit swap request message header of $\{11111100_2\}$.
- Message fields 1 to 6, each of which is defined as in 11.2.3.

The receiver shall use two identical message fields to request a 0 to 2 increase or a 2 to 0 decrease of the number of bits on a subcarrier, according to the allowable bit swap commands defined in Table 11-2.

The extended bit swap request is transmitted five consecutive times.

11.2.5 Bit swap acknowledge

NOTE – "Bit swap" will be used hereafter to refer to either a regular or an extended bit swap.

Within 400 ms after receiving the bit swap request message, the transmitter shall send a bit swap acknowledge message, which shall contain the following:

- a bit-swap acknowledge message header coded "11111111_2";
- one message field, which consists of an eight-bit bit-swap acknowledge command followed by an eight-bit superframe counter number. The acknowledge command shall be coded "11111111_2"; the counter number indicates when the bit swap is to take place. This number shall be at least 47 greater than the counter number when the request was received (this corresponds to a minimum wait time of 800 ms). The new bit and/or transmit power table(s) shall then take effect starting from the first frame (frame 0) of an ADSL superframe, after the specified superframe counter number has been reached. That is, if the bit swap superframe counter number contained in the bit swap acknowledge message is *n*, then the new table(s) shall take effect starting from frame 0 of the (*n*+1)th ADSL superframe.

See Table 11-5.

Table 11-5/G.992.1 – Format of the bit swap acknowledge

Message header	Acknowledge command	Bit swap superframe counter number
11111111_2 (8 bits)	11111111_2 (8 bits)	(8 bits)

The bit swap acknowledge is transmitted five consecutive times.

11.2.6 Bit swap – Receiver

The receiver shall start a timeout of 500 ± 20 ms from the moment it sends a bit swap request message. When no acknowledgement has been detected in this timeout interval, the receiver shall resend a bit swap request message (which shall have the same parameters) and restart the timeout. Only when an acknowledgement has been detected within the timeout interval shall the receiver prepare for a bit swap at the time specified in the acknowledge message.

Upon timeout, the bit swap message shall be transmitted. However, after a finite (implementation dependent) number of unsuccessful retries, the receiver shall take recovery actions to accomplish bit swap; those recovery actions are also vendor discretionary.

IPR2025-00395
Petitioners' Exhibit 1011
Page 136 of 256

The receiver shall then wait until the superframe counter equals the value specified in the bit swap acknowledge message. Then, beginning with frame 0 of the next ADSL superframe the receiver shall:

- Change the bit assignment of the appropriate subcarriers and perform tone reordering based on the new subcarrier bit assignment.
- Update applicable receiver parameters of the appropriate subcarriers to account for a change in their transmitted energy.

  NOTE – A new bit swap request shall only be sent after the previous bit swap has taken place or when the 500 ± 20 ms timeout has occurred while waiting for a bit swap acknowledge.

11.2.7 Bit swap – Transmitter

After transmitting the bit swap acknowledge, the transmitter shall wait until the superframe counter equals the value specified in the bit swap acknowledge. Then, beginning with frame 0 of the next ADSL superframe, the transmitter shall:

- change the bit assignment of the appropriate subcarriers, and perform tone reordering based on the new subcarrier bit assignment;
- change the transmit energy in the appropriate subcarriers by the desired factor.

If the transmitter receives a new bit swap request message while waiting, it shall immediately stop waiting and update the superframe counter for bit swap according to the new message. It shall restart the process for the newly arrived bit swap request message assuming that the new message equals the previous.

ANNEX A

Specific requirements for an ADSL system operating in the frequency band above POTS

This annex defines those parameters of the ADSL system that have been left undefined in the body of this Recommendation because they are unique to an ADSL service that is frequency-division duplexed with POTS.

A.1 ATU-C Functional Characteristics (pertains to clause 7)

A.1.1 Pilot Frequency (supplements 7.11.1.2)

The downstream pilot frequency shall be 276 kHz; that is, $n_{\text{C-PILOT}} = 64$.

A.1.2 ATU-C downstream transmit spectral mask (replaces 7.14)

The band from 25 to 1104 kHz that is referred to is the widest possible band (used for ADSL over POTS implemented with overlapped spectrum). Limits defined within this band apply also to any narrower bands used.

Figure A.1 shows a representative spectral mask for the transmit signal. The low-frequency stop-band is defined as the POTS band, the high-frequency stop-band is defined as frequencies greater than 1104 kHz.

IPR2025-00395
Petitioners' Exhibit 1011
Page 137 of 256

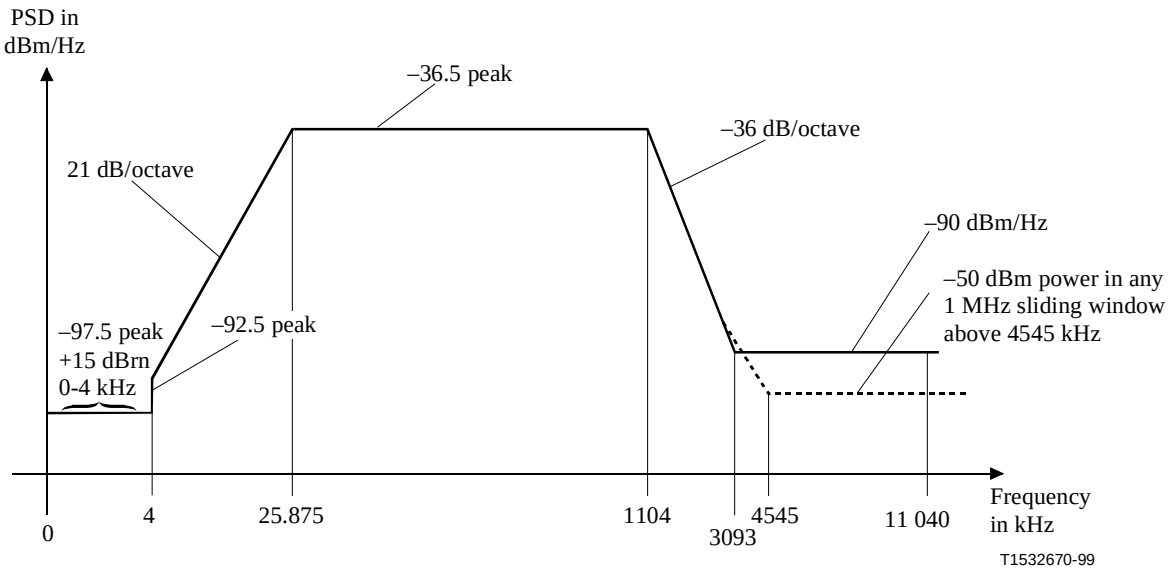

Frequency band *f* (kHz)	Equation for line (dBm/Hz)
$0 < f < 4$	–97.5, with max power in the in 0-4 kHz band of +15 dBrn
$4 < f < 25.875$	$-92.5 + 21 \times \log_2 (f/4)$
$25.875 < f < 1104$	–36.5
$1104 < f < 3093$	$-36.5 - 36 \times \log_2 (f/1104)$
$3093 < f < 4545$	–90 peak, with max power in the [*f*, *f* + 1 MHz] window of $(-36.5 - 36 \times \log_2 (f/1104) + 60)$ dBm
$4545 < f < 11\,040$	–90 peak, with max power in the [*f*, *f* + 1 MHz] window of –50 dBm

NOTE 1 – All PSD measurements are in 100 Ω; the POTS band total power measurement is in 600 Ω.

NOTE 2 – The breakpoint frequencies and PSD values are exact; the indicated slopes are approximate.

NOTE 3 – Above 25.875 kHz, the peak PSD shall be measured with a 10 kHz resolution bandwidth.

NOTE 4 – The power in a 1 MHz sliding window is measured in a 1 MHz bandwidth, starting at the measurement frequency.

NOTE 5 – The step in the PSD mask at 4 kHz is to protect V.90 performance. Originally, the PSD mask continued the 21 dB/octave slope below 4 kHz hitting a floor of –97.5 dBm/Hz at 3400 Hz. It was recognized that this might impact V.90 performance, and so the floor was extended to 4 kHz.

NOTE 6 – All PSD and power measurements shall be made at the U-C interface (see Figure 1-1); the signals delivered to the PSTN are specified in Annex E.

Figure A.1/G.992.1 – ATU-C transmitter PSD mask

A.1.2.1 Passband PSD and response

The average PSD within the used passband shall be no greater than –40 dBm/Hz reduced by power cut-back (see 10.4.5.1); the lower end of this passband depends on which service and duplexing option is used, and is manufacturer discretionary; the upper end depends on whether the signal is for initialization (see A.1.2.3.1) or steady state (see A.1.2.3.3).

The passband ripple shall be no greater than +3.5 dB; the maximum PSD of $(-40 - 2n_{PCB} + 3.5)$ dBm/Hz applies across the whole band from 25 kHz to 1104 kHz.

The group delay variation over the passband shall not exceed 50 µs.

IPR2025-00395
Petitioners' Exhibit 1011
Page 138 of 256

A.1.2.2 Stop-band PSDs

A.1.2.2.1 Low frequency stop-band rejection

The total power in the voiceband (0 to 4 kHz) shall not exceed +15 dBrn (see Recommendation G.996.1 for the method of measurement).

In the transition band from 4 kHz to 25.875 kHz, the maximum PSD is given by a straight line on a log scale from –92.5 dBm/Hz, at just above 4 kHz, to –36.5 dBm/Hz, at 25.875 kHz; that is $(-92.5 + 21 \times \log(f/4)/\log(2))$ dBm/Hz .

A.1.2.2.2 High frequency stop-band rejection

The PSD shall decrease at a rate greater than or equal to 36 dB/octave from $(-40 + 3.5 - 2n_{PCB})$ dBm/Hz at the band edge (1.104 MHz) to –90 dBm/Hz at 3.093 MHz. Above 3.093 MHz the PSD shall not exceed –90 dBm/Hz. Additionally, there shall be less than –50 dBm of power measured in any 1 MHz sliding window above 4.545 MHz.

A.1.2.3 Transmit power spectral density and aggregate power level

There are three different PSD masks for the ATU-C transmit signal, depending on the type of signal sent. In all cases the power in the voiceband measured at the U-C interface and that is delivered to the Public Switched Telephone Network (PSTN) interface shall conform to the specification in A.1.2.2.1.

The power emitted by the ATU-C is limited by the requirements in this subclause. Notwithstanding these requirements, it is assumed that the ADSL will comply with applicable national requirements on emission of electromagnetic energy.

A.1.2.3.1 All initialization signals (except C-ECT) starting with C-REVERB1

The nominal PSD in the band from 25.875 to 1104 kHz shall be set at –40 dBm/Hz for an aggregate transmit power not greater than 20.4 dBm. If measurement of the upstream power indicates that power cut-back is necessary, then the nominal PSD shall be set to a level of $-40 - 2n_{PCB}$ dBm/Hz (as described in 10.4.5.1).

During the C-REVERB and C-SEGUE signals, all subcarriers from index *i* to 255 shall be transmitted, with *i* vendor discretionary (see A.1.2.1). However, at the vendor's discretion, one or more of these subcarriers may not be transmitted during the C-MEDLEY signal.

To allow for non-ideal transmit filter effects (e.g. passband ripple and transition band rolloff), the maximum transmit PSD shall be no more than 1 dB above the nominal PSD level. The maximum transmit PSD shall therefore be no higher than $-39 - 2n_{PCB}$ dBm/Hz.

A.1.2.3.2 C-ECT

Because C-ECT is a vendor defined signal (see 10.4.7), the PSD specification shall be interpreted only as a maximum. This maximum level is $-39 - 2n_{PCB}$ dBm/Hz for the band from 25.875 to 1104 kHz. Subcarriers 1 to 5 may be used, but the power in the voiceband that is delivered to the PSTN interface shall conform to the specification given in A.1.2.2.1.

IPR2025-00395
Petitioners' Exhibit 1011
Page 139 of 256

A.1.2.3.3 Steady-state data signal

The nominal PSD in the band from 25.875 to 1104 kHz shall be set at –40 dBm/Hz. The nominal aggregate power shall be set at –3.65 + 10log(*ncdown*) dBm, where *ncdown* is the number of subcarriers used (i.e. with $b_i > 0$) (20.4 dBm if all subcarriers are used). The transmit PSD and aggregate power may, however, be changed from their nominal values in either of the following circumstances:

- A power cut-back may have been applied, reducing the nominal PSD level to $-40 - 2n_{PCB}$ dBm/Hz (see 10.4.5.1).
- The bits and gains table (received from the ATU-R during initialization and possibly updated through bit swaps, see R-B&G in 10.9.14 and 11.2) may not allocate bits to some subcarriers and may finely adjust (i.e. within the range –14.5 to +2.5 dB) the transmit PSD level of others in order to equalize expected error rates on each of those subcarriers.
- Vendor discretionary transmit PSD levels for unused subcarriers (i.e. with $b_i = 0$). The maximum transmit PSD for these subcarriers is specified in b) and c) below.

To allow for non-ideal transmit filter effects (e.g. passband ripple and transition band rolloff), the maximum transmit PSD shall be no more than 1 dB above the finely adjusted nominal PSD level. The maximum transmit PSD shall therefore be no higher than $-36.5 - 2n_{PCB}$ dBm/Hz.

The transmit PSD of each subcarrier is defined as follows:

a) For the subcarriers with ($b_i > 0$), the ATU-C transmitter shall transmit at PSD levels equal to that specified by the g_i (e.g. $g_i = 1$, then transmit at C-MEDLEY transmit PSD level). The aggregate transmit power in these subcarriers shall not exceed $-3.65 + 10\log(ncdown_1) - 2n_{PCB}$ dBm by more than 0.7 dB, where $ncdown_1$ is the number of these subcarriers (i.e. with $b_i > 0$).

b) For the subcarriers with ($b_i = 0$ and $g_i > 0$), the ATU-C transmitter should and is recommended to transmit at PSD levels equal to that specified by the g_i (e.g. $g_i = 1$, then transmit at C-MEDLEY level), with a 4-QAM constellation point (which may change from symbol to symbol). The ATU-R receiver cannot assume any particular PSD levels on those subcarriers. The transmit PSD levels of those subcarriers shall be no higher than the C-REVERB1 transmit PSD level + $10\log(g_i^2)$ dB. The aggregate transmit power in these subcarriers shall not exceed $-3.65 + 10\log(ncdown_2) - 2n_{PCB}$ dBm, where $ncdown_2$ is the number of these subcarriers (i.e. with $b_i = 0$ and $g_i > 0$).

c) For the subcarriers with ($b_i = 0$ and $g_i = 0$), the ATU-C transmitter should and is recommended to transmit no power on those subcarriers. The ATU-R receiver cannot assume any particular PSD levels on those subcarriers. The transmit PSD levels of those subcarriers with $g_i = 0$ shall be at least 10 dB below the sync symbol reference transmit PSD level if the subcarrier is below the lowest used subcarrier (lowest i with $b_i > 0$) and shall be below the sync symbol reference transmit PSD level if the subcarrier is above the lowest used subcarrier.

The aggregate transmit power over the 25.875 to 1104 kHz band shall be no higher than $20.4 - 2n_{PCB}$ dBm, which is equivalent to an average transmit PSD of no higher than $-40 - 2n_{PCB}$ dBm/Hz.

It is recommended that the g_i values for subcarriers with $g_i > 0$ are constraint within ±2.5 dB with respect to g_{sync}, during initialization and subsequent bit swaps, to avoid cyclostationary interference from the synchronization symbol.

IPR2025-00395
Petitioners' Exhibit 1011
Page 140 of 256

A.1.2.3.4 Synchronization symbol

At initialization time, the sync symbol reference transmit PSD level shall be set at $-40 - 2n_{PCB}$ $+10\log(g_{sync}^2)$ dBm/Hz, with g_{sync}^2 defined as the average g_i^2 value over the used (i.e. $b_i > 0$) subcarriers. The sync symbol reference transmit PSD shall not be updated with used subcarrier gain changes during SHOWTIME.

The transmit PSD level for those subcarriers with $g_i > 0$ shall be the sync symbol reference transmit PSD level. The transmit PSD levels of those subcarriers with $g_i = 0$ shall be at least 10 dB below the sync symbol reference transmit PSD level if the subcarrier is below the lowest used subcarrier (lowest i with $b_i > 0$) and shall be below the sync symbol reference transmit PSD level if the subcarrier is above the lowest used subcarrier.

Since the g_i are applied only to the data symbols, the transmit PSD of a synchronization symbol differs from the transmit PSD of a data symbol. These g_i are calculated for the multipoint constellations in order to equalize the expected error rate on all subcarriers, and are therefore irrelevant for most of the 4-QAM modulated subcarriers of the synchronization symbol.

A.1.3 ATU-C transmitter PSD mask for reduced NEXT

Figure A.2 defines a spectral mask for the ATU-C transmitted signal, which results in reduced NEXT into the ADSL upstream band, relative to the mask in A.1.2. Adherence to this mask will in many cases result in improved upstream performance of the other ADSL systems in the same or adjacent binder group, with the improvement dependent upon the other interferers. This mask differs from the mask in A.1.2 only in the band from 4 kHz to 138 kHz.

IPR2025-00395
Petitioners' Exhibit 1011
Page 141 of 256

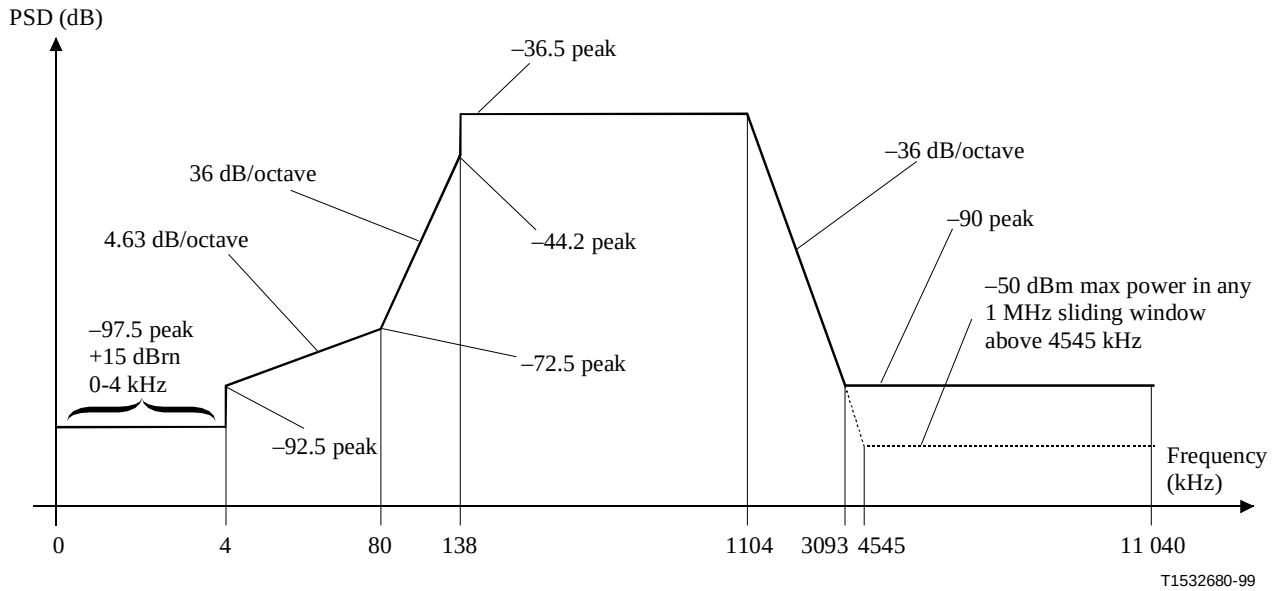

Frequency band *f* (kHz)	Equation for line (dBm/Hz)
$0 < f < 4$	–97.5, with max power in the in 0-4 kHz band of +15 dBrn
$4 < f < 80$	$-92.5 + 4.63 \times \log_2 (f/4)$
$80 < f < 138$	$-72.5 + 36 \times \log_2 (f/80)$
$138 < f < 1104$	–36.5
$1104 < f < 3093$	$-36.5 - 36 \times \log_2(f/1104)$
$3093 < f < 4545$	–90 peak, with max power in the [*f*, *f* + 1 MHz] window of $(-36.5 - 36 \times \log_2(f/1104) + 60)$ dBm
$4545 < f < 11\,040$	–90 peak, with max power in the [*f*, *f* + 1 MHz] window of –50 dBm

NOTE 1 – All PSD measurements are in 100 Ω; the POTS band total power measurement is in 600 Ω.

NOTE 2 – The breakpoint frequencies and PSD values are exact; the indicated slopes are approximate.

NOTE 3 – Above 25.875 kHz, the peak PSD shall be measured with a 10 kHz resolution bandwidth.

NOTE 4 – The power in a 1 MHz sliding window is measured in a 1 MHz bandwidth, starting at the measurement frequency.

NOTE 5 – The step in the PSD mask at 4 kHz is to protect V.90 performance. Originally, the PSD mask continued the 21 dB/octave slope below 4 kHz hitting a floor of –97.5 dBm/Hz at 3400 Hz. It was recognized that this might impact V.90 performance, and so the floor was extended to 4 kHz.

NOTE 6 – All PSD and power measurements shall be made at the U-C interface (see Figure 1-1); the signals delivered to the PSTN are specified in Annex E.

Figure A.2/G.992.1 – ATU-C transmitter PSD mask for reduced NEXT

A.2 ATU-R (see clause 8)

A.2.1 Modulation by the inverse discrete Fourier transform (see 8.11.2)

The modulating transform defines the relationship between the 64 real values x_n and the Z_i

$$x_n = \sum_{i=0}^{63} \exp\left(\frac{j\pi ni}{32}\right) Z_i \qquad \text{(A-1)}$$

IPR2025-00395
Petitioners' Exhibit 1011
Page 142 of 256

The encoder and scaler generate only 31 complex values of Z_i (plus zero at DC and one real value if the Nyquist frequency is used). In order to generate real values of x_n, these values shall be augmented so that the vector Z has Hermitian symmetry. That is,

$$Z_i = conj[Z_{64-i}] \text{ for } i = 33 \text{ to } 63 \qquad \text{(A-2)}$$

A.2.2 Synchronization symbol (supplements 8.11.3)

The data pattern used in the synchronization symbol shall be the pseudo-random sequence PRU (d_n, for $n = 1$ to 64), defined by:

$$d_n = 1 \qquad \text{for } n = 1 \text{ to } 6 \qquad \text{(A-3)}$$

$$d_n = d_{n\text{-}5} \oplus d_{n\text{-}6} \qquad \text{for } n = 7 \text{ to } 64 \qquad \text{(A-4)}$$

The bits are used as follows: the first pair of bits (d_1 and d_2) is used for the DC and Nyquist subcarriers (the power assigned to them is, of course, zero, so the bits are effectively ignored); then the first and second bits of subsequent pairs shall be used to define the X_i and Y_i for i = 1 to 31 as shown in Table 7-13.

The period of PRU is only 63 bits, so $d_{64} = d_1$.

The d_1-d_{96} are re-initialized for each symbol, so each symbol of R-REVERB1 uses the same data.

A.2.3 Cyclic prefix (replaces 8.12)

The cyclic prefix shall be used for all symbols beginning with segment C-REVERB3 of the initialization sequence, as defined in 10.7.2.

The last 4 samples of the output of the IDFT (x_k for k = 60 to 63) shall be prepended to the block of 64 samples and read out to the DAC in sequence. That is, the subscripts, k, of the DAC samples in sequence are 60...63, 0...63.

A.2.4 ATU-R transmitter spectral mask (replaces 8.14)

Figure A.3 shows a PSD mask for the transmitted signal. The passband is defined as frequency range over which the modem transmits, which may be narrower than the 25.875 to 138 kHz shown. The low-frequency stop-band is defined as the voiceband.

IPR2025-00395
Petitioners' Exhibit 1011
Page 143 of 256

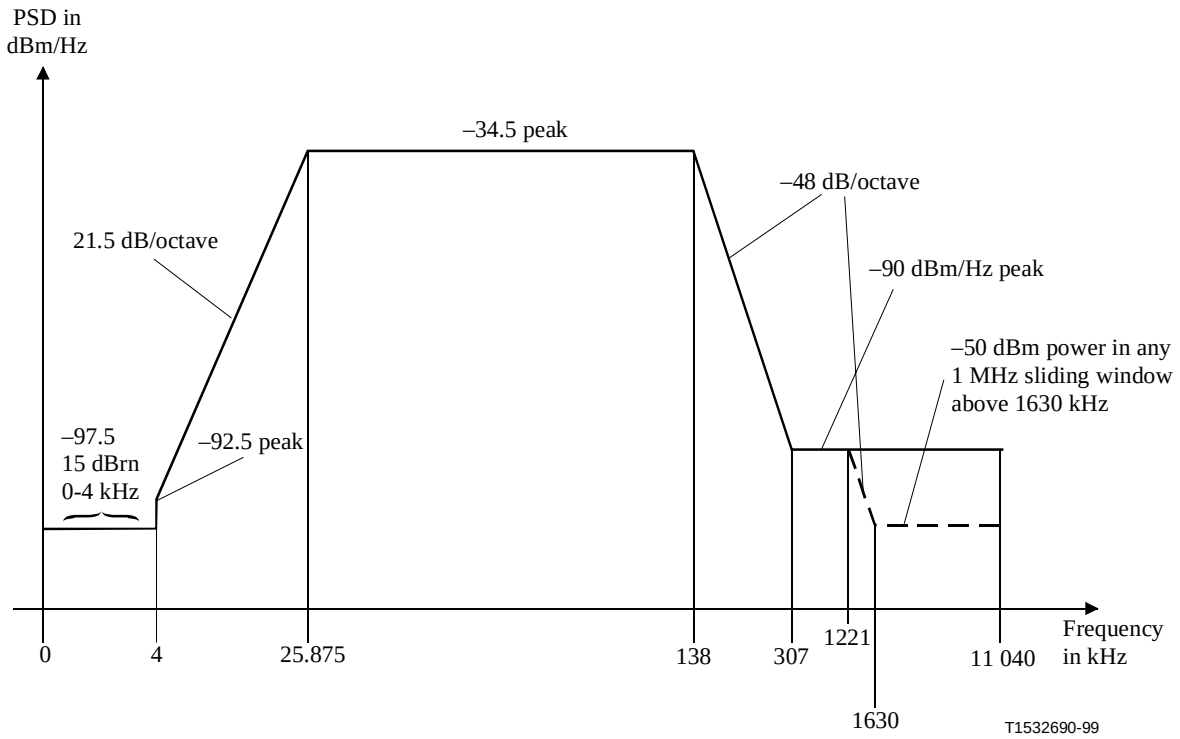

Frequency band *f* (kHz)	Equation for line (dBm/Hz)
$0 < f < 4$	–97.5, with max power in the in 0-4 kHz band of +15 dBrn
$4 < f < 25.875$	$-92.5 + 21.5 \times \log_2(f/4)$
$25.875 < f < 138$	–34.5
$138 < f < 307$	$-34.5 - 48 \times \log_2(f/138)$
$307 < f < 1221$	–90
$1221 < f < 1630$	–90 peak, with max power in the [*f*, *f* + 1 MHz] window of $(-90 - 48 \times \log_2(f/1221) + 60)$ dBm
$1630 < f < 11\,040$	–90 peak, with max power in the [*f*, *f* + 1 MHz] window of –50 dBm

NOTE 1 – All PSD measurements are in 100 Ω; the POTS band total power measurement is in 600 Ω.

NOTE 2 – The breakpoint frequencies and PSD values are exact; the indicated slopes are approximate.

NOTE 3 – Above 25.875 kHz, the peak PSD shall be measured with a 10 kHz resolution bandwidth.

NOTE 4 – The power in a 1 MHz sliding window is measured in a 1 MHz bandwidth, starting at the measurement frequency.

NOTE 5 – The step in the PSD mask at 4 kHz is to protect V.90 performance. Originally, the PSD mask continued the 21.5 dB/octave slope below 4 kHz hitting a floor of –97.5 dBm/Hz at 3400 Hz. It was recognized that this might impact V.90 performance, and so the floor was extended to 4 kHz.

NOTE 6 – All PSD and power measurements shall be made at the U-C interface (see Figure 1-1); the signals delivered to the PSTN are specified in Annex E.

Figure A.3/G.992.1 – ATU-R transmitter PSD mask

A.2.4.1 Passband PSD and response

The average PSD within the used passband shall be no greater than –38 dBm/Hz; the upper end of this passband depends on whether the signal is for initialization (see A.2.4.3.1) or steady state (see A.2.4.3.3).

The passband ripple shall be no greater than +3.5 dB; the maximum PSD of –34.5 dBm/Hz applies across the whole band from 25 kHz to 138 kHz.

The group delay variation over the passband shall not exceed 50 µs.

IPR2025-00395
Petitioners' Exhibit 1011
Page 144 of 256

A.2.4.2 Stop-band PSDs

A.2.4.2.1 Low frequency stop-band rejection

The total power in the voiceband (0 Hz to 4 kHz) shall not exceed +15 dBrn (see Recommendation G.996.1 for the method of measurement).

In the transition band from 4 kHz to 25.875 kHz, the maximum PSD is given by a straight line on a log scale from –92.5 dBm/Hz, at just above 4 kHz, to –34.5 dBm/Hz at 25.875 kHz; that is $(-92.5 + 21.5 \times \log(f/4)/\log(2))$ dBm/Hz.

A.2.4.2.2 High frequency stop-band rejection

The PSD shall decrease at 48 dB/octave from (–38 dBm/Hz + 3.5 dB) at the band-edge (138 kHz) to –90 dBm/Hz at 307 kHz. In addition, the power in any 1 MHz sliding window from 1630 kHz to 11.04 MHz shall not exceed –50 dBm.

A.2.4.3 Transmit power spectral density and aggregate power level

There are three different PSD masks for the ATU-C transmit signal, depending on the type of signal sent. In all cases the power in the voiceband measured at the U-R interface and that is delivered to the POTS interface shall conform to the specification in A.2.4.2.1.

A.2.4.3.1 All initialization signals (except R-ECT) starting with R-REVERB1

The nominal PSD in the band from 25 to 138 kHz shall be –38 dBm/Hz for an aggregate power of not greater than 12.5 dBm.

During the R-REVERB and R-SEGUE signals, all subcarriers from index *i* to 31 shall be transmitted, with *i* vendor discretionary (see A.2.4.1). However, at the vendor's discretion, one or more of these subcarriers may not be transmitted during the R-MEDLEY signal.

To allow for non-ideal transmit filter effects (e.g. passband ripple and transition band rolloff), the maximum transmit PSD shall be no more than 1 dB above the nominal PSD level. The maximum transmit PSD shall therefore be no higher than –37 dBm/Hz.

A.2.4.3.2 R-ECT

Since R-ECT is a vendor-defined signal (see 10.5.4), the PSD specification should be interpreted only as a maximum. This maximum level is –37 dBm/Hz for the band from 25.875 to 138 kHz. Subcarriers 1-5 may be used, but the power in the voiceband that is delivered to the POTS interface shall conform to the specification given in A.2.4.2.1.

A.2.4.3.3 Steady-state data signal

The nominal PSD in the band from 25.875 to 138 kHz shall be set at –38 dBm/Hz. The nominal aggregate power shall be set at $-1.65 + 10\log(ncup)$ dBm, where *ncup* is the number of subcarriers used (i.e. with $b_i > 0$) (12.5 dBm if all subcarriers are used). The transmit PSD and aggregate power may, however, be changed from their nominal values in either of the following circumstances:

- The bits and gains table (received from the ATU-C during initialization and possibly updated through bit swaps, see C-B&G in 10.8.13 and 11.2) may not allocate bits to some subcarriers and may finely adjust (i.e. within the range –14.5 to +2.5 dBm) the transmit PSD level of others in order to equalize expected error rates on each of those subcarriers.
- Vendor discretionary transmit PSD levels for unused subcarriers (i.e. $b_i = 0$). The maximum transmit PSD for these subcarriers is specified in b) and c) below.

To allow for non-ideal transmit filter effects (e.g. passband ripple and transition band rolloff), the maximum transmit PSD shall be no more than 1 dB above the finely adjusted nominal PSD level. The maximum transmit PSD shall therefore be no higher than –34.5 dBm/Hz.

IPR2025-00395
Petitioners' Exhibit 1011
Page 145 of 256

The transmit PSD of each subcarrier is defined as follows:

a) For the subcarriers with ($b_i > 0$), the ATU-R transmitter shall transmit at PSD levels equal to that specified by the g_i (e.g. $g_i = 1$, then transmit at R-MEDLEY transmit PSD level). The aggregate transmit power in these subcarriers shall not exceed $-1.65 + 10\log(ncup_1)$ dBm by more than 0.7 dB, where $ncup_1$ is the number of these subcarriers (i.e. with $b_i > 0$).

b) For the subcarriers with ($b_i = 0$ and $g_i > 0$), the ATU-R transmitter should and is recommended to transmit at PSD levels equal to that specified by the g_i (e.g. $g_i = 1$, then transmit at R-MEDLEY level), with a 4-QAM constellation point (which may change from symbol to symbol). The ATU-C receiver cannot assume any particular PSD levels on those subcarriers. The transmit PSD levels of those subcarriers shall be no higher than the R-REVERB1 transmit PSD level + $10\log(g_i^2)$ dB. The aggregate transmit power in these subcarriers shall not exceed $-1.65 + 10\log(ncup_2)$ dBm, where $ncup_2$ is the number of these subcarriers (i.e. with $b_i = 0$ and $g_i > 0$).

c) For the subcarriers with ($b_i = 0$ and $g_i = 0$), the ATU-R transmitter should and is recommended to transmit no power on those subcarriers. The ATU-C receiver cannot assume any particular PSD levels on those subcarriers. The transmit PSD levels of those subcarriers with $g_i = 0$ shall be at least 10 dB below the sync symbol reference transmit PSD level if the subcarrier is below the lowest used subcarrier (lowest i with $b_i > 0$) and shall be below the sync symbol reference transmit PSD level if the subcarrier is above the lowest used subcarrier.

The aggregate transmit power over the 25.875 to 138 kHz band shall be no higher than 12.5 dBm, which is equivalent to an average transmit PSD of no higher than –38 dBm/Hz.

It is recommended that the g_i values for subcarriers with $g_i > 0$ are constraint within ±2.5 dB with respect to g_{sync}, during initialization and subsequent bit swaps, to avoid cyclostationary interference from the synchronization symbol.

A.2.4.3.4 Synchronization symbol

At initialization time, the sync symbol reference transmit PSD level shall be set at $-38 + 10\log(g_{sync}^2)$ dBm/Hz , with g_{sync}^2 defined as the average g_i^2 value over the used (i.e. $b_i > 0$) subcarriers. The sync symbol reference transmit PSD shall not be updated with used subcarrier gain changes during SHOWTIME.

The transmit PSD level for those subcarriers with $g_i > 0$ shall be the sync symbol reference transmit PSD level. The transmit PSD levels of those subcarriers with $g_i = 0$ shall be at least 10 dB below the sync symbol reference transmit PSD level if the subcarrier is below the lowest used subcarrier (lowest i with $b_i > 0$) and shall be below the sync symbol reference transmit PSD level if the subcarrier is above the lowest used subcarrier.

Since the g_i are applied only to the data symbols, the transmit PSD of a synchronization symbol differs from the transmit PSD of a data symbol. These g_i are calculated for the multipoint constellations in order to equalize the expected error rate on all subcarriers, and are therefore irrelevant for most of the 4-QAM modulated subcarriers of the synchronization symbol.

A.2.5 Nyquist frequency (supplements 8.11.1.2)

The upstream Nyquist frequency shall be at subcarrier #32 (f = 138 kHz).

IPR2025-00395
Petitioners' Exhibit 1011
Page 146 of 256

A.3 Initialization (see clause 10)

A.3.1 Power cut-back (supplements 10.4.5.1)

If the total upstream power measured on subcarriers 7-18 during R-REVERB1 is greater than 3 dBm, then the PSD for C-REVERB1 and all subsequent downstream signals shall be as shown in Table A.1.

Table A.1/G.992.1 – Power cut-back: downstream PSD as a function of upstream received power

Upstream received power (dBm) <	3	4	5	6	7	8	9
Max downstream PSD (dBm/Hz)	–40	–42	–44	–46	–48	–50	–52

This chosen level shall become the reference level for all subsequent gain calculations.

A.3.2 Estimated average upstream loop attenuation (see 10.8.9.1)

With the allowable transmit PSDs –38 dBm/Hz over the 25.875 to 138 kHz band, the total transmit power, as used for this calculation, shall be 12.5 dBm.

A.3.3 Estimated average downstream loop attenuation (supplements 10.9.8.1)

With the allowable transmit PSDs as defined in Table 10-7 (–40 dBm/Hz to –52 dBm/Hz) and a maximum bandwidth of approximately 1074 kHz if using overlapped spectrum, the total transmit power, as used for this calculation, may range from a maximum of 20.3 dBm in steps of –2 dB to a minimum of 8.3 dBm.

A.3.4 C-PILOT1 (supplements 10.4.2)

$f_{C\text{-}PILOT1} = 276$ kHz that is, $N_{C\text{-}PILOT1} = 64$.

A.3.5 R-REVERB1 (see 10.5.2)

The data pattern used in R-REVERB1 is the pseudo-random upstream sequence PRU defined in A.2.2 and repeated here for convenience:

$$d_n = 1 \qquad \text{for } n = 1 \text{ to } 6 \tag{A-5}$$

$$d_n = d_{n\text{-}5} \oplus d_{n\text{-}6} \qquad \text{for } n = 7 \text{ to } 64 \tag{A-6}$$

The bits defined in 10.5.2 shall be used as follows: the first pair of bits (d_1 and d_2) is used for the DC and Nyquist subcarriers (the power assigned to them is, of course, zero, so the bits are effectively ignored); then the first and second bits of subsequent pairs are used to define the X_i and Y_i for $i = 1$ to 31 as defined for C-REVERB1 in Table 7-13. Although data bits are defined for all the subcarriers, the subcarriers actually transmitted during R-REVERB1 start from a vendor discretionary subcarrier index (see A.2.4.3.1). No gain scaling shall be applied to any subcarrier.

A.3.6 C-ECT (see 10.4.7)

The level of the ADSL signal in the frequency band from 0 to about 10 kHz that leaks through the POTS low-pass filter is tightly limited (see 7.14). Therefore it is recommended that subcarriers 1-4 not be used for C-ECT, or, at least, that they be transmitted at a much lower level.

A.3.7 R-ECT (see 10.5.4)

The level of the ADSL signal in the frequency band from 0 to about 10 kHz that leaks through the POTS low-pass filter is tightly limited (see Annex E). Therefore it is recommended that subcarriers 1-4 not be used for R-ECT, or, at least, that they be transmitted at a much lower level.

IPR2025-00395
Petitioners' Exhibit 1011
Page 147 of 256

A.3.8 C-MSG2 (supplements 10.8.9)

$n_{1C\text{-}MSG2} = 43$

$n_{2C\text{-}MSG2} = 91$

A.3.9 R-MSG2 (supplements 10.9.8)

$N_{1R\text{-}MSG2} = 10$

$N_{2R\text{-}MSG2} = 20$

A.4 Electrical characteristics (new)

This subclause specifies the combination of ATU-x and high-pass filter, as shown in Figure 1-1; further information about the low-pass filter is specified in Annex E.

A.4.1 DC characteristics

All requirements of this Recommendation shall be met in the presence of all POTS loop currents from 0 mA to 100 mA, and differential loop voltages as follows:

- DC voltages of 0 V to minus 60 V.
- Ringing signals no larger than 103 V rms at any frequency from 20 to 30 Hz with a DC component in the range from 0 V to minus 60 V.
- The input DC resistance of the ATU-x at the U-x interface shall be greater than or equal to 5 MΩ.

NOTE – The most common implementation of the splitter filters is with the low-pass and high-pass connected in parallel at the U-x port. In this arrangement the high-pass filter will typically block DC with capacitors.

A.4.2 Voiceband characteristics

A.4.2.1 Input impedance

The imaginary part of the ATU-x input impedance, as measured at the U-x interface, at 4 kHz shall be in the range of 1.1-2.0 kΩ (approximately equivalent to a 20-34 nF capacitor) for the ATU-R (or the ATU-C that has an integrated splitter and high-pass function) and in the range of 500 Ω to 1.0 kΩ (approximately equivalent to 40-68 nF) for the ATU-C designed to be used with an external splitter. In both cases, the imaginary part of the impedance shall increase monotonically below 4 kHz.

Refer to Annex E for additional information.

A.4.2.2 ADSL noise interference into the POTS circuit

This is the specification for the voiceband PSD of the ATU-C and ATU-R (see 7.14 and 8.14, respectively).

IPR2025-00395
Petitioners' Exhibit 1011
Page 148 of 256

A.4.3 ADSL band characteristics

A.4.3.1 Longitudinal balance

Longitudinal balance at the U-C and U-R interfaces shall be >40 dB over the frequency range 30 kHz to 1104 kHz. If only the HPF part of the POTS splitter is integrated in the ATU, the measurement of the longitudinal balance in the ADSL band shall be performed as shown in Figure A.4. If both the LPF and the HPF parts of the POTS splitter are integrated in the ATU, the measurement of the longitudinal balance in the ADSL band shall be performed with the PSTN and POTS interfaces terminated with ZTC and ZTR, respectively, as shown in Figure A.5. Longitudinal balance is given by the equation:

$$LBal = 20\log\left|\frac{e_l}{e_m}\right| \text{ dB} \qquad \text{(A-7)}$$

where:

e_l = the applied longitudinal voltage (referenced to the building or green wire ground of the ATU);

e_m = the resultant metallic voltage appearing across a terminating resistor.

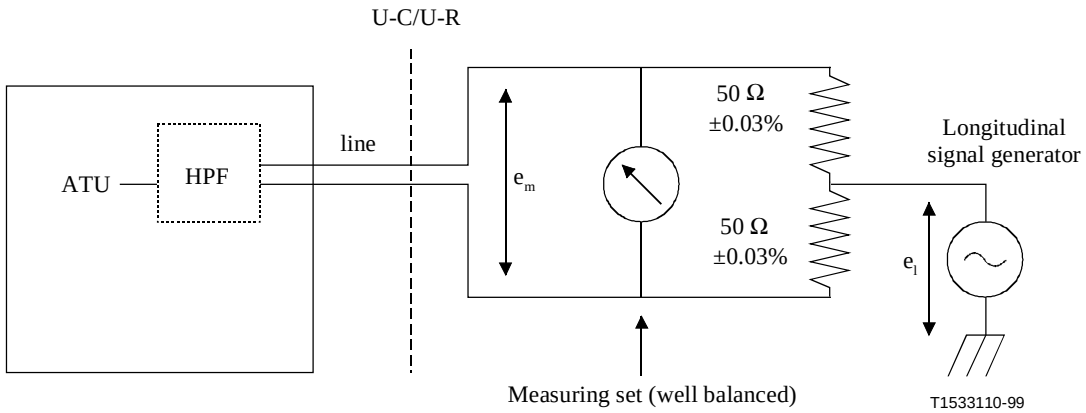

Figure A.4/G.992.1 – Longitudinal balance above 30 kHz measurement method (only HPF integrated)

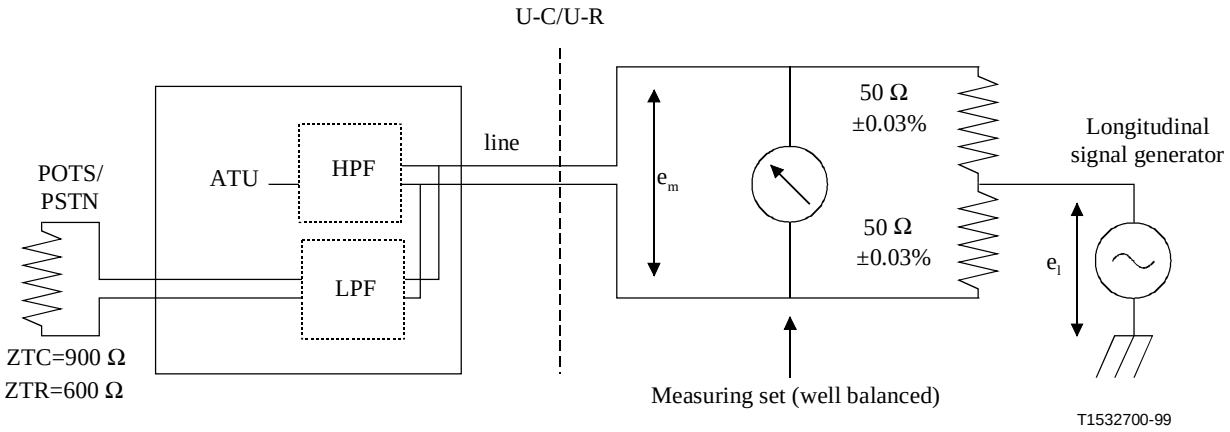

Figure A.5/G.992.1 – Longitudinal balance above 30 kHz measurement method (HPF and LPF integrated)

IPR2025-00395
Petitioners' Exhibit 1011
Page 149 of 256

ANNEX B

Specific requirements for an ADSL system operating in the frequency band above ISDN as defined in ITU-T Recommendation G.961 Appendices I and II

This annex defines those parameters of the ADSL system that have been left undefined in the body of this Recommendation because they are unique to an ADSL service that is frequency-division duplexed with ISDN-BA on the same subscriber line ADSL. The scope is to establish viable ways enabling the simultaneous deployment of asymmetric services and 160 kbit/s (2B+D) Basic Rate Access with the constraint to use existing transmission technologies as those specified in Recommendation G.961 Appendices I and II.

B.1 ATU Functional Characteristics (see clause 7)

The ADSL signals described herein shall be allocated above the operating band of ISDN-BA signals based on 2B1Q/4B3T line signals as those defined in Recommendation G.961 Appendices I and II. In order to allow sufficient upstream bandwidth capacity, the ATU-R shall have a transmission bandwidth making use of tones 33 to 63. The use of an extended range making use of tones between 1 and 63 is optional.

The IDFT implementation at the ATU-R side shall be implemented as follows. Tones 33 to 63 will contain complex values generated by the encoder and scaler. The values in tones 1 to 31 will be:

a) mirrored complex-conjugate of tones 33-63 if the ATU-R transmitter uses only 32 tones (tone #32 = 0);

b) zero if the ATU-R transmitter uses 64 tones and the ATU-C receiver uses 32 tones (tone #32 = 0);

c) complex data generated by the encoder and scaler if both the ATU-R transmitter and ATU-C receiver use 64 tones (tone 32 also equals value generated by encoder and scaler).

The information whether the upstream transmitter and/or receiver uses 32 or 64 tones is negotiated via G.994.1 using the bits defined in 10.2 and 10.3.

B.1.1 Data Subcarriers (see 7.11.1.1)

The channel analysis signal defined in 10.6.6 allows for a maximum of 255 carriers (at frequencies $n\Delta f$, $n = 1$ to 255) to be used, but for this service the lower limit of n is 33. The use of tones below 33 is optional. Frequency Division Duplexing (FDD) may be used to separate the upstream and downstream signals, and the lower limit on n is determined by the up/down splitting filters. The cut-off frequencies of these filters are at the discretion of the manufacturer, and the range of usable n is determined during the channel estimation.

B.1.2 Pilot Frequency (see 7.11.1.2)

The downstream pilot frequency shall be 414 kHz; that is, $N_{\mathrm{PILOT}} = 96$.

B.1.3 Downstream transmit spectral mask (replaces 7.14)

Figure B.1 shows the spectral mask for the transmit signal. The low-frequency stop-band is the upstream band, the high-frequency stop-band is defined as frequencies greater than 1104 kHz.

IPR2025-00395
Petitioners' Exhibit 1011
Page 150 of 256

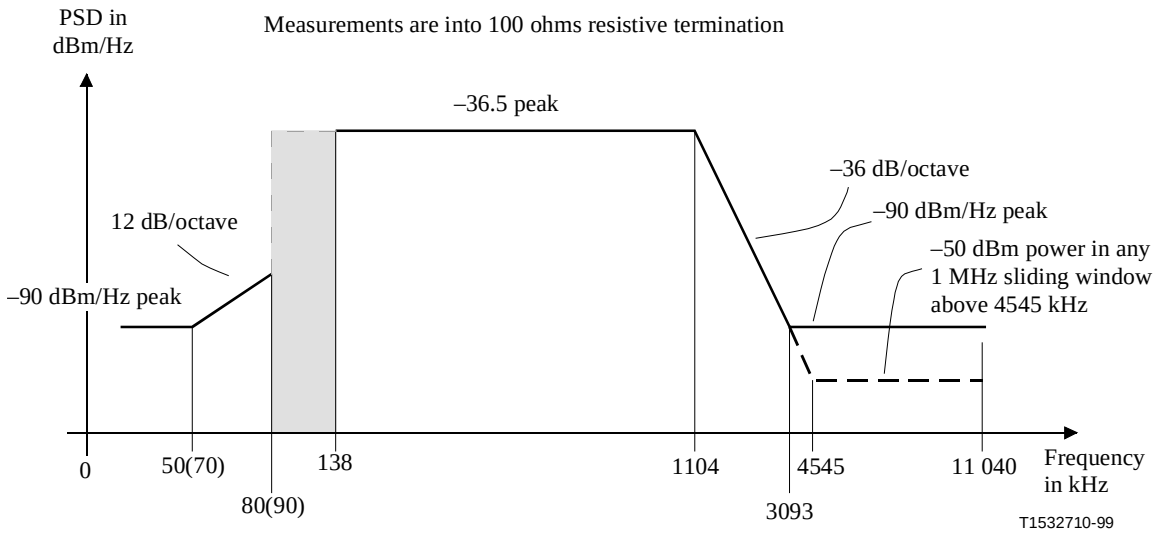

Frequency band f (kHz)	Equation for line (dBm/Hz)
$0 < f < 50(70)$	–90
$>f_1=50(70) < f < 80(90)$	$-90 + 12 \times \log_2(f/f_1)$
$80(90) < f < 138$	Note 2
$138 < f < 1104$	–36.5
$1104 < f < 3093$	$-36.5 - 36 \times \log_2(f/1104)$
$3093 < f < 4545$	–90 peak, with max power in the [f, f + 1 MHz] window of $(-36.5 - 36 \times \log_2(f/1104) + 60)$ dBm
$4545 < f < 11\ 040$	–90 peak, with max power in the [f, f + 1 MHz] window of –50 dBm

NOTE 1 – 50 and 80 kHz are frequency limits referring to ADSL over ISDN lines operating with 2B1Q code (G.961 Appendix II). 70 and 90 kHz are frequency limits referring to ADSL over ISDN lines operating with 4B3T code (G.961 Appendix I).

NOTE 2 – The value of PSD in this region depends on the low-pass and high-pass filter designs. The filters affect the ISDN-BA performance when combined with ADSL in two ways:

1) the residual ADSL power, filtered by the high pass and received by the ISDN-BA receiver as noise;

2) the amplitude and phase distortion introduced by low-pass filters.

It is expected that the degradation impact on the ISDN-BA line system performance be not more than 4.5 dB and 4 dB, for 2B1Q and 4B3T line codes respectively, at the insertion loss reference frequency.

Figure B.1/G.992.1 – ATU-C transmitter PSD mask

The maximum level of the PSD of the ADSL signal measured at the ISDN port of the splitter shall not exceed the limits defined in the first two rows of the table in Figure B.1.

All PSD measurements made at the Line port of the ISDN splitter shall use a 100 Ω resistive reference impedance.

All PSD measurements made at the ISDN port of the ISDN splitter shall use the design impedance of ISDN-BA for 2B1Q and 4B3T respectively as defined in ETSI TS 102 080 (V1.3.1).

B.1.3.1 Passband PSD and response

The average PSD within the used passband shall be no greater than –40 dBm/Hz reduced by power cut-back in multiples of 2 dB; the lower end of this passband depends on which service and duplexing option is used, and is manufacturer discretionary; the upper end depends on whether the signal is for initialization (see B.2.2.3.1) or steady state (see B.2.2.3.2).

IPR2025-00395
Petitioners' Exhibit 1011
Page 151 of 256

The passband ripple shall be no greater than +3.5 dB; the maximum PSD of ($-40 - 2n_{PCB} + 3.5$) dBm/Hz applies across the whole band from 138 kHz to 1104 kHz.

The group delay variation over the passband shall not exceed 50 µs.

B.1.3.2 Transmit power spectral density and Nominal aggregate power level

There are two different PSD masks for the ATU-C transmit signal, depending on the type of signal sent.

The power emitted by the ATU-C is limited by the requirements in this subclause. Notwithstanding these requirements, it is assumed that the ADSL will comply with applicable national requirements on emission of electromagnetic energy.

B.1.3.2.1 All initialization signals starting with C-REVERB1

The nominal PSD in the band from 138 to 1104 kHz shall be set at –40 dBm/Hz for an aggregate transmit power not greater than 19.9 dBm. If measurement of the upstream power indicates that power cut-back is necessary, then the nominal PSD shall be set to a level of $-40 - 2n_{PCB}$ dBm/Hz as described in 10.4.5.1.

During the C-REVERB and C-SEGUE signals, all subcarriers from index i to 255 shall be transmitted, with i vendor discretionary (see B.1.3.1). However, at the vendor's discretion, one or more of these subcarriers may not be transmitted during the C-MEDLEY signal.

To allow for non-ideal transmit filter effects (e.g. passband ripple and transition band rolloff), the maximum transmit PSD shall be no more than 1 dB above the nominal PSD level. The maximum transmit PSD shall therefore be no higher than $-39 - 2n_{PCB}$ dBm/Hz.

B.1.3.2.2 Steady-state data signal

The nominal PSD in the band from 138 to 1104 kHz shall be set at –40 dBm/Hz. The nominal aggregate power shall be set at $-3.65 + 10\log(ncdown)$ dBm, where *ncdown* is the number of subcarriers used (i.e. with $b_i > 0$) (19.9 dBm if all subcarriers are used). The transmit PSD and aggregate power may, however, be changed from their nominal values in either of the following circumstances:

- A power cut-back may have been applied, reducing the nominal PSD level to $-40 - 2n_{PCB}$ dBm/Hz (see 10.4.5.1).
- The bits and gains table (received from the ATU-R during initialization and possibly updated through bit swaps, see R-B&G in 10.9.14 and 11.2) may not allocate bits to some subcarriers and may finely adjust (i.e. within the range –14.5 to +2.5 dB) the transmit PSD level of others in order to equalize expected error rates on each of those subcarriers.
- Vendor discretionary transmit PSD levels for unused subcarriers (i.e. with $b_i = 0$). The maximum transmit PSD for these subcarriers is specified in b) and c) below.

To allow for non-ideal transmit filter effects (e.g. passband ripple and transition band rolloff), the maximum transmit PSD shall be no more than 1 dB above the finely adjusted nominal PSD level. The maximum transmit PSD shall therefore be no higher than $-36.5 - 2n_{PCB}$ dBm/Hz.

The transmit PSD of each subcarrier is defined as follows:

a) For the subcarriers with ($b_i > 0$), the ATU-C transmitter shall transmit at PSD levels equal to those specified by the g_i (e.g. $g_i = 1$, then transmit at C-MEDLEY transmit PSD level). The aggregate transmit power in these subcarriers shall not exceed $-3.65 + 10\log(ncdown_1) - 2n_{PCB}$ dBm by more than 0.7 dB, where $ncdown_1$ is the number of these subcarriers (i.e. with $b_i > 0$).

IPR2025-00395
Petitioners' Exhibit 1011
Page 152 of 256

b) For the subcarriers with (b_i = 0 and g_i > 0), the ATU-C transmitter should and is recommended to transmit at PSD levels equal to those specified by the g_i (e.g. g_i = 1, then transmit at C-MEDLEY level), with a 4-QAM constellation point (which may change from symbol to symbol). The ATU-R receiver cannot assume any particular PSD levels on those subcarriers. The transmit PSD levels of those subcarriers shall be no higher than the C-REVERB1 transmit PSD level + 10log(g_i^2) dB. The aggregate transmit power in these subcarriers shall not exceed –3.65 + 10log($ncdown_2$) – $2n_{PCB}$ dBm, where $ncdown_2$ is the number of these subcarriers (i.e. with $b_i = 0$ and $g_i > 0$).

c) For the subcarriers with (b_i = 0 and g_i = 0), the ATU-C transmitter should and is recommended to transmit no power on those subcarriers. The ATU-R receiver cannot assume any particular PSD levels on those subcarriers. The transmit PSD levels of those subcarriers with $g_i = 0$ shall be at least 10 dB below the sync symbol reference transmit PSD level if the subcarrier is below the lowest used subcarrier (lowest i with $b_i > 0$) and shall be below the sync symbol reference transmit PSD level if the subcarrier is above the lowest used subcarrier.

The aggregate transmit power over the 138 to 1104 kHz band shall be no higher than 19.9 – $2n_{PCB}$ dBm, which is equivalent to an average transmit PSD of no higher than –40 – $2n_{PCB}$ dBm/Hz.

It is recommended that the g_i values for subcarriers with $g_i > 0$ are constraint within ±2.5 dB with respect to g_{sync}, during initialization and subsequent bit swaps, to avoid cyclostationary interference from the synchronization symbol.

B.1.3.2.3 Synchronization symbol

At initialization time, the sync symbol reference transmit PSD level shall be set at –40 – $2n_{PCB}$ + 10log(g_{sync}^2) dBm/Hz, with g_{sync}^2 defined as the average g_i^2 value over the used (i.e. b_i > 0) subcarriers. The sync symbol reference transmit PSD shall not be updated with used subcarrier gain changes during SHOWTIME.

The transmit PSD level for those subcarriers with $g_i > 0$ shall be the sync symbol reference transmit PSD level. The transmit PSD levels of those subcarriers with $g_i = 0$ shall be at least 10 dB below the sync symbol reference transmit PSD level if the subcarrier is below the lowest used subcarrier (lowest i with b_i > 0) and shall be below the sync symbol reference transmit PSD level if the subcarrier is above the lowest used subcarrier.

Since the g_i are applied only to the data symbols, the transmit PSD of a synchronization symbol differs from the transmit PSD of a data symbol. These g_i are calculated for the multipoint constellations in order to equalize the expected error rate on all subcarriers, and are therefore irrelevant for most of the 4-QAM modulated subcarriers of the synchronization symbol.

IPR2025-00395
Petitioners' Exhibit 1011
Page 153 of 256

B.2 ATU-R functional characteristics (see clause 8)

B.2.1 ATU-R transmit reference models

The ATU-R reference model for STM transport is given in Figure B.2. The ATU-R reference model for ATM transport is given in Figure B.3.

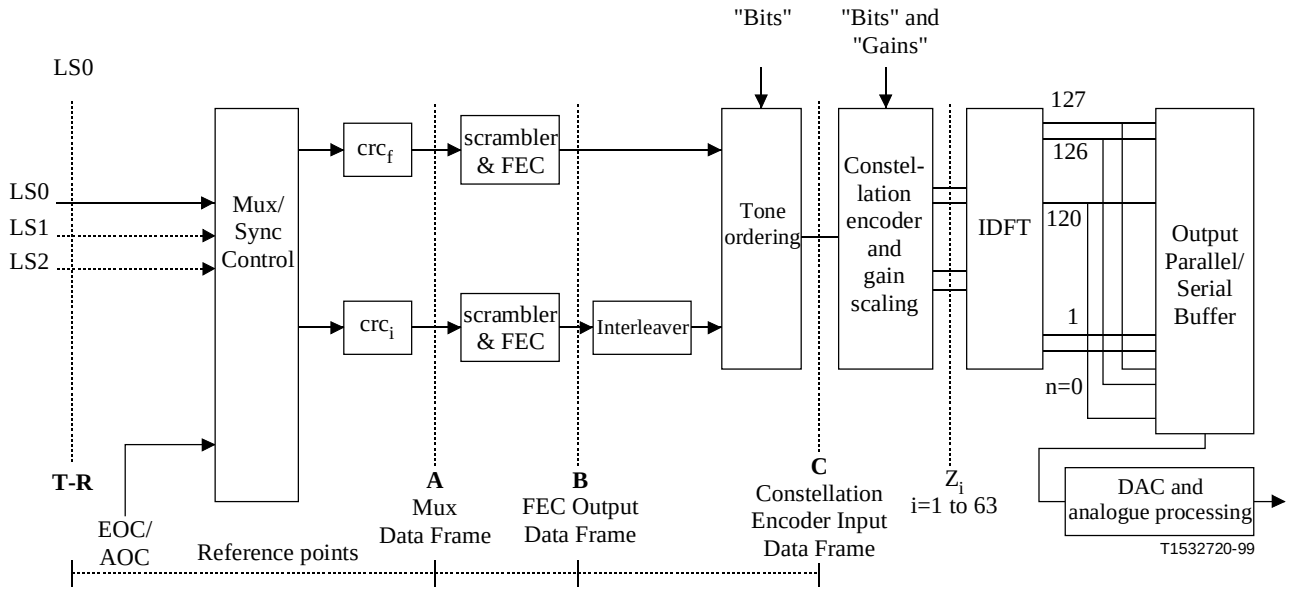

Figure B.2/G.992.1 – ATU-R transmitter reference mode for STM transport

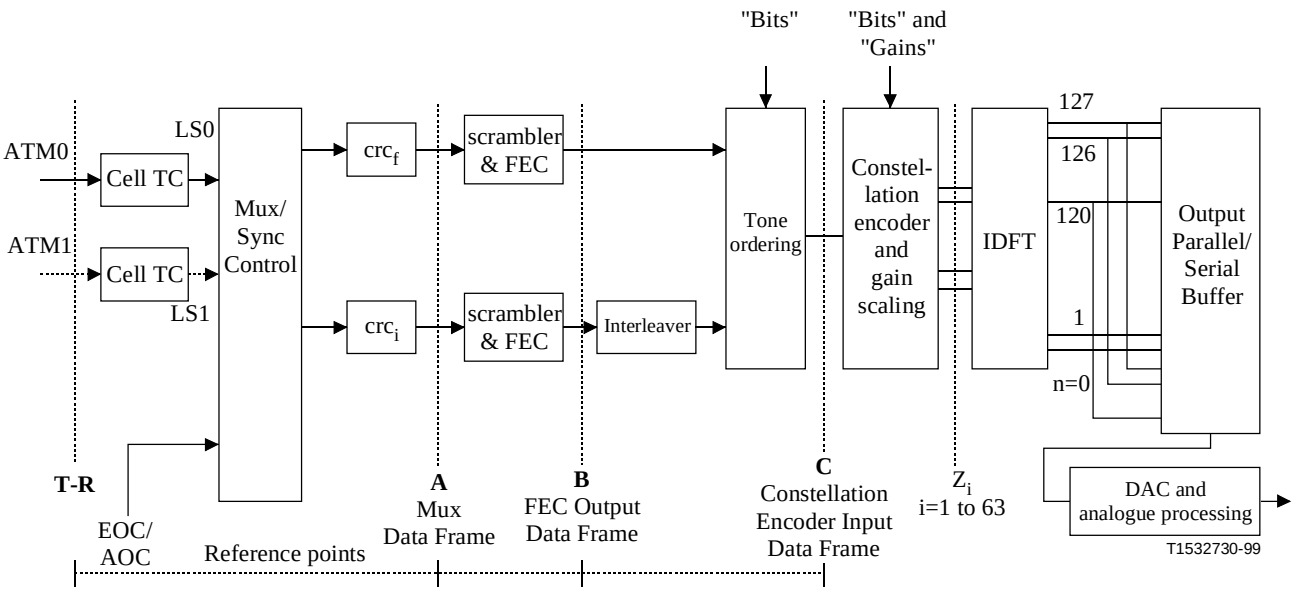

Figure B.3/G.992.1 – ATU-R transmitter reference model for ATM transport

IPR2025-00395
Petitioners' Exhibit 1011
Page 154 of 256

B.2.2 ATU-R Upstream transmit spectral mask (replaces 8.14)

Figure B.4 shows the spectral mask for the transmit signal. The low-frequency stop-band is defined as the ISDN band, the high-frequency stop-band is defined as frequencies greater than 276 kHz.

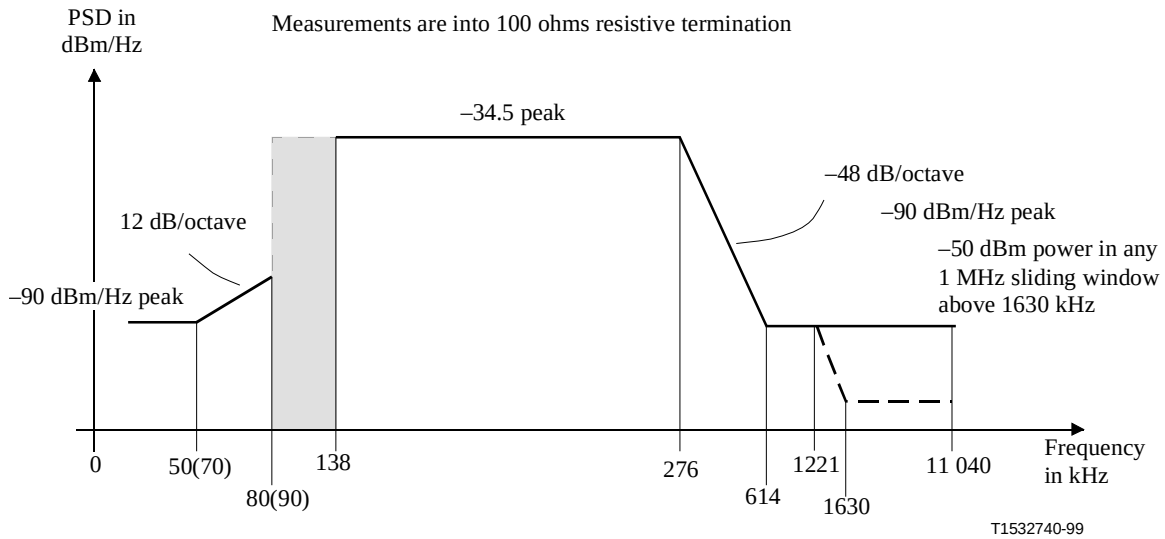

Frequency band *f* (kHz)	Equation for line (dBm/Hz)
$0 < f < 50(70)$	–90
$>f_1=50(70) < f < 80(90)$	$-90 + 12 \times \log_2(f/f_1)$
$80(90) < f < 138$	Note 2
$138 < f < 276$	–34.5
$276 < f < 614$	$-34.5 - 48 \times \log_2(f/276)$
$614 < f < 1221$	–90
$1221 < f < 1630$	–90 peak, with max power in the [*f*, *f* + 1 MHz] window of $(-90 - 48 \times \log_2(f/1221) + 60)$ dBm
$1630 < f < 11\,040$	–90 peak, with max power in the [*f*, *f* + 1 MHz] window of –50 dBm

NOTE 1 – 50 and 80 kHz are frequency limits referring to ADSL over ISDN lines operating with 2B1Q code (G.961 Appendix II). 70 and 90 kHz are frequency limits referring to ADSL over ISDN lines operating with 4B3T code (G.961 Appendix I).

NOTE 2 – The value of PSD in this region depends on the low-pass and high-pass filter designs. The filters affect the ISDN-BA performance when combined with ADSL in two ways:

1) the residual ADSL power, filtered by the high pass and received by the ISDN-BA receiver as noise;

2) the amplitude and phase distortion introduced by low-pass filters.

It is expected that the degradation impact on the ISDN-BA line system performance be not more than 4.5 dB and 4 dB, for 2B1Q and 4B3T line codes respectively, at the insertion loss reference frequency.

Figure B.4/G.992.1 – ATU-R transmitter PSD mask

The maximum level of the PSD of the ADSL signal measured at the ISDN port of the splitter shall not exceed the limits defined in the first two rows of the table in Figure B.4.

All PSD measurements made at the Line port of the ISDN splitter shall use a 100 Ω resistive reference impedance.

All PSD measurements made at the ISDN port of the ISDN splitter shall use the design impedance of ISDN-BA for 2B1Q and 4B3T respectively as defined in ETSI TS 102 080 (V1.3.1).

IPR2025-00395
Petitioners' Exhibit 1011
Page 155 of 256

B.2.2.1 Passband PSD and response

The average PSD within the used passband shall be no greater than –38 dBm/Hz; the upper end of this passband depends on whether the signal is for initialization (see B.2.2.3.1) or steady state (see B.2.2.3.2).

The passband ripple shall be no greater than +3.5 dB; the maximum PSD of –34.5 dBm/Hz applies across the whole band from 138 kHz to 276 kHz.

The group delay variation over the passband shall not exceed 50 µs.

B.2.2.2 Stop-band PSDs

See Figure B.4.

B.2.2.3 Transmit power spectral density and Nominal aggregate power level

There are two different PSD masks for the ATU-R transmit signal, depending on the type of signal sent. In all cases the power in the voiceband measured at the U-R interface and that is delivered to the ISDN interface shall conform to the specification in Figure B.4.

B.2.2.3.1 All initialization signals starting with R-REVERB1

The nominal PSD in the band from 138 to 276 kHz shall be –38 dBm/Hz for an aggregate power of not greater than 13.3 dBm.

The nominal aggregate power level shall be 13.26 dBm.

During the R-REVERB and R-SEGUE signals, all subcarriers from index i to 63 shall be transmitted, with i vendor discretionary. However, at the vendor's discretion, one or more of these subcarriers may not be transmitted during the R-MEDLEY signal.

To allow for non-ideal transmit filter effects (e.g. passband ripple and transition band rolloff), the maximum transmit PSD shall be no more than 1 dB above the nominal PSD level. The maximum transmit PSD shall therefore be no higher than –37 dBm/Hz.

B.2.2.3.2 Steady-state data signal

The nominal PSD in the band from 138 to 276 kHz shall be set at –38 dBm/Hz. The nominal aggregate power shall be set at $-1.65 + 10\log(ncup)$ dBm, where $ncup$ is the number of subcarriers used (i.e. with $b_i > 0$) (13.3 dBm if all subcarriers are used). The transmit PSD and aggregate power may, however, be changed from their nominal values in either of the following circumstances:

- The bits and gains table (received from the ATU-C during initialization and possibly updated through bit swaps, see C-B&G in 10.8.13 and 11.2) may not allocate bits to some subcarriers and may finely adjust (i.e. within the range –14.5 to +2.5 dBm) the transmit PSD level of others in order to equalize expected error rates on each of those subcarriers.
- Vendor discretionary transmit PSD levels for unused subcarriers (i.e. $b_i = 0$). The maximum transmit PSD for these subcarriers is specified in b) and c) below.

To allow for non-ideal transmit filter effects (e.g. passband ripple and transition band rolloff), the maximum transmit PSD shall be no more than 1 dB above the finely adjusted nominal PSD level. The maximum transmit PSD shall therefore be no higher than –34.5 dBm/Hz.

The transmit PSD of each subcarrier is defined as follows:

a) For the subcarriers with ($b_i > 0$), the ATU-R transmitter shall transmit at PSD levels equal to those specified by the g_i (e.g. $g_i = 1$, then transmit at R-MEDLEY transmit PSD level). The aggregate transmit power in these subcarriers shall not exceed $-1.65 + 10\log(ncup_1)$ dBm by more than 0.7 dB, where $ncup_1$ is the number of these subcarriers (i.e. with $b_i > 0$).

IPR2025-00395
Petitioners' Exhibit 1011
Page 156 of 256

b) For the subcarriers with (b_i = 0 and g_i > 0), the ATU-R transmitter should and is recommended to transmit at PSD levels equal to those specified by the g_i (e.g. g_i = 1, then transmit at R-MEDLEY level), with a 4-QAM constellation point (which may change from symbol to symbol). The ATU-C receiver cannot assume any particular PSD levels on those subcarriers. The transmit PSD levels of those subcarriers shall be no higher than the R-REVERB1 transmit PSD level + 10log(g_i^2) dB. The aggregate transmit power in these subcarriers shall not exceed –1.65 + 10log($ncup_2$) dBm, where $ncup_2$ is the number of these subcarriers (i.e. with $b_i = 0$ and $g_i > 0$).

c) For the subcarriers with (b_i = 0 and g_i = 0), the ATU-R transmitter should and is recommended to transmit no power on those subcarriers. The ATU-C receiver cannot assume any particular PSD levels on those subcarriers. The transmit PSD levels of those subcarriers with $g_i = 0$ shall be at least 10 dB below the sync symbol reference transmit PSD level if the subcarrier is below the lowest used subcarrier (lowest i with $b_i > 0$) and shall be below the sync symbol reference transmit PSD level if the subcarrier is above the lowest used subcarrier.

The aggregate transmit power over the 138 to 276 kHz band shall be no higher than 13.3 dBm, which is equivalent to an average transmit PSD of no higher than –38 dBm/Hz.

It is recommended that the g_i values for subcarriers with $g_i > 0$ are constraint within ±2.5 dB with respect to g_{sync}, during initialization and subsequent bit swaps, to avoid cyclostationary interference from the synchronization symbol.

B.2.2.3.3 Synchronization symbol

At initialization time, the sync symbol reference transmit PSD level shall be set at –38 + 10log(g_{sync}^2) dBm/Hz, with g_{sync}^2 defined as the average g_i^2 value over the used (i.e. $b_i > 0$) subcarriers. The sync symbol reference transmit PSD shall not be updated with used subcarrier gain changes during SHOWTIME.

The transmit PSD level for those subcarriers with $g_i > 0$ shall be the sync symbol reference transmit PSD level. The transmit PSD levels of those subcarriers with $g_i = 0$ shall be at least 10 dB below the sync symbol reference transmit PSD level if the subcarrier is below the lowest used subcarrier (lowest i with $b_i > 0$) and shall be below the sync symbol reference transmit PSD level if the subcarrier is above the lowest used subcarrier.

Since the g_i are applied only to the data symbols, the transmit PSD of a synchronization symbol differs from the transmit PSD of a data symbol. These g_i are calculated for the multipoint constellations in order to equalize the expected error rate on all subcarriers, and are therefore irrelevant for most of the 4-QAM modulated subcarriers of the synchronization symbol.

B.2.3 Data subcarriers (replaces 8.11.1.1)

The channel analysis signal (R-REVERB1) defined in B.3.7 allows for a maximum of 63 carriers, however the use of carriers between n = 1 to 32 is optional and their use is negotiated through G.994.1 (see B.3.1 and B.3.2). This lower limit on n is partly determined by the ISDN/ADSL splitting filters. If FDM is used to separate the upstream and downstream ADSL signals, the upper limit is set by down-up splitting filters. The cut-off frequencies of these filters are completely at the discretion of the manufacturer, and the range of usable n is determined during the channel estimation.

IPR2025-00395
Petitioners' Exhibit 1011
Page 157 of 256

B.2.4 Pilot frequency

There is no upstream pilot, the ATU-R shall perform slave loop timing based on the downstream pilot.

B.2.5 Nyquist frequency (supplements 8.11.1.2)

The upstream Nyquist frequency shall be at subcarrier #64 (f = 276 kHz).

B.2.6 Modulation by the Inverse Discrete Fourier Transform (replaces 8.11.2)

The modulating transform defines the relationship between the 128 real values x_k and the Z_i:

$$x_k = \sum_{i=0}^{127} \exp\left(\frac{j\pi ki}{64}\right) Z_i \qquad \text{for } k = 0 \text{ to } 127$$

The encoder and scaler generate complex values of Z_i corresponding to tones 1 to 63 (plus zero at DC and one real value if the Nyquist frequency is used). In order to generate real values of x_k, these values shall be augmented so that the vector Z_i has Hermitian symmetry. That is,

$$Z_i = \text{conj}[Z_{128\text{-i}}] \qquad \text{for } i = 65 \text{ to } 128$$

If the carriers N = 1 to 32 are not used, then:

$$Z_i = 0 \qquad \text{for } i = 1 \text{ to } 32$$

NOTE – For the mirrored complex conjugate transmitter,

$$Z_i = \text{conj}[Z_{64\text{-i}}] \qquad \text{for } i = 1 \text{ to } 31$$

$$Z_{32} = 0$$

B.2.7 Synchronization symbol (supplements 8.11.3)

The data pattern used in the synchronization symbol shall be the pseudo-random sequence PRU (d_n, for n = 1 to 128), defined by:

$$d_n = 1 \qquad \text{for } n = 1 \text{ to } 6$$

$$d_n = d_{n\text{-}5} \oplus d_{n\text{-}6} \qquad \text{for } n = 7 \text{ to } 128$$

The bits are used as follows: the first pair of bits (d_1 and d_2) is used for the DC and Nyquist subcarriers (the power assigned to them is zero, so the bits are effectively ignored); then the first and second bits of subsequent pairs shall be used to define the X_i and Y_i for i = 1 to 63 in accordance to Table 7-13.

B.2.8 Cyclic prefix (replaces 8.12)

The cyclic prefix shall be used for all symbols beginning with segment C-REVERB3 of the initialization sequence, as defined in 10.7.2.

The last 8 samples of the output of the IDFT (x_k for k = 120 to 127) shall be prepended to the block of 64 samples and read out to the DAC in sequence. That is, the subscript, k, of the DAC samples in sequence are 120...127, 0…127.

IPR2025-00395
Petitioners' Exhibit 1011
Page 158 of 256

B.3 Initialization (see clause 10)

B.3.1 Handshake – ATU-C (supplements 10.2)

B.3.1.1 CL messages (supplements 10.2.1)

See Table B.1.

Table B.1/G.992.1 – ATU-C CL message NPar(2) bit definitions for Annex B

NPar(2) bit	Definition
Tones 1 to 32	If set to ONE, signifies that the ATU-C is capable of receiving upstream tones 1 to 32 during transceiver training (only applicable for G.992.1 Annex B).

B.3.1.2 MS messages (supplements 10.2.2)

See Table B.2.

Table B.2/G.992.1 – ATU-C MS message NPar(2) bit definitions for Annex B

NPar(2) bit	Definition
Tones 1 to 32	Signifies that the ATU-R is allowed to transmit upstream tones 1 to 32 during transceiver training (only applicable for G.992.1 Annex B).

B.3.2 Handshake – ATU-R (supplements 10.3)

B.3.2.1 CLR messages (supplements 10.3.1)

See Table B.3.

Table B.3/G.992.1 – ATU-R CLR message NPar(2) bit definitions for Annex B

NPar(2) bit	Definition
Tones 1 to 32	If set to ONE, signifies that the ATU-R is capable of transmitting upstream tones 1 to 32 during transceiver training (only applicable for G.992.1 Annex B).

B.3.2.2 MS messages (supplements 10.3.2)

See Table B.4.

Table B.4/G.992.1 – ATU-R MS message NPar(2) bit definitions for Annex B

NPar(2) bit	Definition
Tones 1 to 32	Set to ONE if and only if this bit was set to ONE in both the last previous CL message and the last previous CLR message. Signifies that the ATU-R is allowed to transmit upstream tones 1 to 32 (or a subset thereof) during transceiver training (only applicable for G.992.1 Annex B).

IPR2025-00395
Petitioners' Exhibit 1011
Page 159 of 256

B.3.3 Power Cut-back (supplements 10.4.5.1)

If the total upstream power measured on 12 consecutive subcarriers in the range 36 to 51 during R-REVERB1 is greater than 3 dBm, then the PSD for C-REVERB1 and all subsequent downstream signals shall be as shown in Table B.5.

The ATU-C shall choose 12 consecutive subcarriers in the range 36 to 51 actually transmitted at nominal power by the ATU-R. In the case where the ATU-C cannot find 12 such subcarriers, the ATU-C is allowed to use less subcarriers in the upstream power measurement, but shall compensate the measurement accordingly.

Table B.5/G.992.1 – Power cut-back: downstream PSD as a function of upstream received power

Upstream received power (dBm) <	0	1.5	3	4.5	6	7.5	9
Max downstream PSD (dBm/Hz)	–40	–42	–44	–46	–48	–50	–52

This chosen level shall become the reference level for all subsequent gain calculations.

B.3.4 Estimated average upstream loop attenuation (see 10.8.9.1)

With the allowable transmit PSDs –38 dBm/Hz over the 138 to 276 kHz band, the total transmit power, as used for this calculation, shall be 13.3 dBm.

B.3.5 Estimated average downstream loop attenuation (10.9.8.1)

With the allowable transmit PSDs as defined in Table B.5 (–40 dBm/Hz to –52 dBm/Hz) over the 138 to 1104 kHz band, the total transmit power, as used for this calculation, may range from a maximum of 19.9 dBm in steps of –2 dB to a minimum of 7.9 dBm.

B.3.6 C-PILOT1 (for 10.4.3)

$f_{C\text{-}PILOT1}$ = 414 kHz that is, $n_{C\text{-}PILOT1}$ = 96.

B.3.7 R-REVERB1 (supplements 10.5.2)

The data pattern used in R-REVERB1 shall be the pseudo-random sequence PRU (d_n , for n = 1 to 128), defined by:

$$d_n = 1 \qquad \text{for } n = 1 \text{ to } 6$$

$$d_n = d_{n\text{-}5} \oplus d_{n\text{-}6} \qquad \text{for } n = 7 \text{ to } 128$$

The bits are used as follows: the first pair of bits (d_1 and d_2) is used for the DC and Nyquist subcarriers (the power assigned to them is, of course, zero, so the bits are effectively ignored); then the first and second bits of subsequent pairs shall be used to define the X_i and Y_i for i = 1 to 63 as defined for C-REVERB1 (see 10.4.5).

NOTE – The d_1 to d_6 are re-initialized for each symbol, so each symbol of R-REVERB1 uses the same data.

IPR2025-00395
Petitioners' Exhibit 1011
Page 160 of 256

B.3.8 R-MEDLEY (replaces 10.7.8)

R-MEDLEY is a wideband pseudo-random signal used for estimation of the upstream SNR at the ATU-C. The data to be transmitted are derived from the pseudo-random sequence PRU defined in 10.5.2 (R-REVERB1). In contrast to R-REVERB1, however, the cyclic prefix is used and the data sequence continue from one symbol to the next. Because the sequence is of length 63, and 128 bits are used for each symbol, the subcarrier vector for R-MEDLEY changes from one symbol to the next. R-MEDLEY is transmitted for 16 384 symbol periods. Following R-MEDLEY, the ATU-R enters signalling state R-REVERB4.

B.3.9 C-MSG2 (supplements 10.8.9)

$n_{C\text{-}MSG1} = 75$

$n_{C\text{-}MSG2} = 91$

B.3.10 R-MSG2 (supplements 10.9.8)

$N_{R\text{-}MSG1} = 44$

$N_{R\text{-}MSG2} = 49$

B.3.11 C-ECT and R-ECT (supplements 10.4.7 and 10.5.4)

Because C-ECT and R-ECT are vendor defined signals (see 10.4.7 and 10.5.4) the PSD specification shall be interpreted only as a maximum. This maximum level is $-39 - 2n_{PCB}$ (for C-ECT) and –37 (for R-ECT) dBm/Hz (with n indicating the power cut-back, n = 0 to 6) for the band from 138 kHz to 1104 kHz (for C-ECT) and to 276 (for R-ECT). Subcarriers 1 to 31 may be used, but the power in the ISDN band shall conform to the specification given in B.1.3 and B.2.2.

B.3.12 C-B&G (replaces 10.8.13)

C-B&G shall be used to transmit to the ATU-R the bits and gains information, {i.e. $b_1, g_1, b_2, g_2, \ldots, b_{63}, g_{63},$}that are to be used on the upstream carriers. b_i indicates the number of bits to be coded by the ATU-R transmitter onto the *ith* upstream carrier; g_i indicates the scale factor, relative to the gain that was used for that carrier during the transmission of R-MEDLEY, that shall be applied to the *ith* upstream carrier. Because no bits or energy shall be transmitted at DC or one-half the sampling rate, b_0, g_0, b_{64}, and g_{64} shall all be presumed to be zero and shall not be transmitted.

Each b_i shall be represented as an unsigned 4-bit integer, with valid b_is lying in the range of zero to N_{upmax}, the maximum number of bits that the ATU-R is prepared to modulate onto any subcarrier, which is communicated in R-MSG1.

Each g_i shall be represented as an unsigned 12-bit fixed-point quantity, with the binary point assumed just to the right of the third most significant bit. For example, a g_i with binary representation (most significant bit listed first) 001.010000000_2 would instruct the ATU-R to scale the constellation for carrier *i*, by a gain factor of 1.25, so that the power in that carrier shall be 1.94 dB higher than it was during R-MEDLEY.

For subcarriers on which no data are to be transmitted, and the receiver will never allocate bits (e.g. out-of-band subcarriers) both b_i and g_i shall be set to zero (0000 and 00000000 0000, respectively). For subcarriers on which no data are to be currently transmitted, but the receiver may allocate bits later (e.g. as a result of an SNR improvement), the b_i shall be set to zero and the g_i a value in the 0.19 to 1.33 range (000.001100000_2 to 001.010101011_2).

IPR2025-00395
Petitioners' Exhibit 1011
Page 161 of 256

The C-B&G information shall be mapped in a 1008-bit (126 byte) message m defined by:

$$m = \{m_{1007}, m_{1006}, \ldots, m_1, m_0\} = \{g_{63}, b_{63}, \ldots, g_1, b_1\}$$

with the MSB of b_i and g_i in the higher m index and m_0 being transmitted first. The message m shall be transmitted in 126 symbols, using the transmission method as described 10.8.9.

Following C-B&G, the ATU-C shall enter the state C-CRC5. The new timing diagram of the initialization sequence (part 2) (modified from the diagram given in 10.9.18) is shown in Figure B.5.

IPR2025-00395
Petitioners' Exhibit 1011
Page 162 of 256

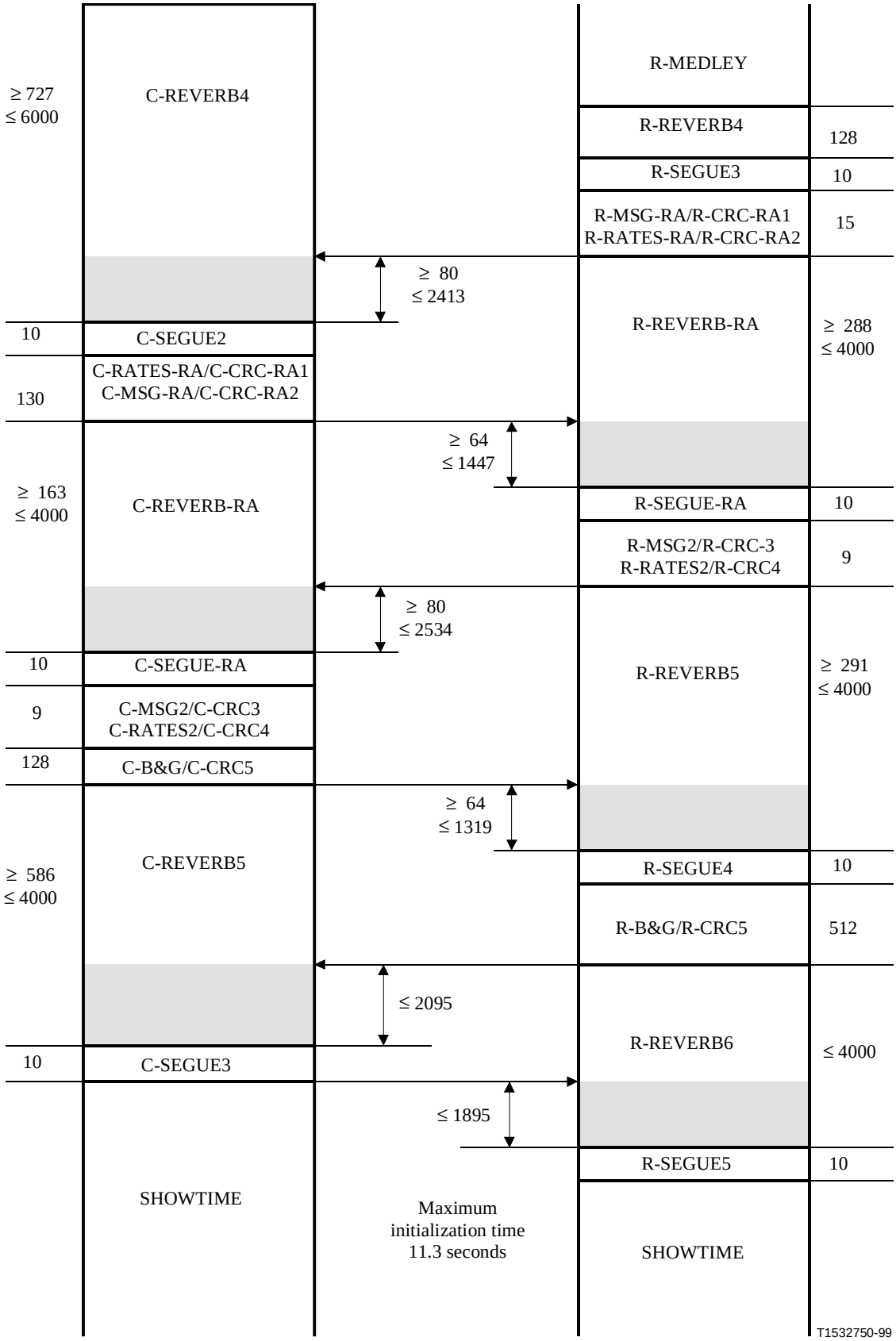

Figure B.5/G.992.1 – Timing diagram of the initialization sequence – Part 2

IPR2025-00395
Petitioners' Exhibit 1011
Page 163 of 256

ANNEX C

Specific requirements for an ADSL system operating in the same cable as ISDN as defined in ITU-T Recommendation G.961 Appendix III

C.1 Scope

This annex describes those specifications that are unique to an ADSL system coexisting in the same binder as TCM-ISDN as defined Recommendation G.961 Appendix III. The subclauses in this annex provide supplementary and replacement material to the clauses in the main body. The nature of the material is parenthetically indicated in the subclause heading. The modifications described in this annex allow a performance improvement from the ADSL system specified in Annex A in an environment coexisting with TCM-ISDN in the same cable. This annex also defines those parameters of this ADSL system that have been left undefined in the main body of this Recommendation. It is recommended that ADSL system implementing Annex C also implements Annex A.

C.2 Definitions

Bitmap-F_C	ATU-R transmitter bitmap under TCM-ISDN FEXT noise generated at ATU-C
Bitmap-F_R	ATU-C transmitter bitmap under TCM-ISDN FEXT noise generated at ATU-R
Bitmap-N_C	ATU-R transmitter bitmap under TCM-ISDN NEXT noise generated at ATU-C
Bitmap-N_R	ATU-C transmitter bitmap under TCM-ISDN NEXT noise generated at ATU-R
Dual Bitmap	The Dual Bitmap method has dual bit rates under the FEXT and NEXT noise from TCM-ISDN
FEXT Bitmap	Similar to the Dual Bitmap method however transmission only occurs during FEXT noise from TCM-ISDN
$FEXT_C$ duration	TCM-ISDN FEXT duration at ATU-C estimated by the ATU-R
$FEXT_C$ symbol	DMT symbol transmitted by ATU-R during TCM-ISDN FEXT
$FEXT_R$ duration	TCM-ISDN FEXT duration at ATU-R estimated by the ATU-C
$FEXT_R$ symbol	DMT symbol transmitted by ATU-C during TCM-ISDN FEXT
Hyperframe	5 Superframes structure which synchronized TTR
$NEXT_C$ duration	TCM-ISDN NEXT duration at ATU-C estimated by the ATU-R
$NEXT_C$ symbol	DMT symbol transmitted by ATU-R during TCM-ISDN NEXT
$NEXT_R$ duration	TCM-ISDN NEXT duration at ATU-R estimated by the ATU-C
$NEXT_R$ symbol	DMT symbol transmitted by ATU-C during TCM-ISDN NEXT
N_{SWF}	Sliding Window frame counter
Subframe	10 consecutive DMT symbols (except for sync symbols) according to TTR timing
TTR	TCM-ISDN Timing Reference
TTR_C	Timing reference used in ATU-C

IPR2025-00395
Petitioners' Exhibit 1011
Page 164 of 256

TTR_R	Timing reference used in ATU-R
UI	Unit Interval

C.3 Reference Models

C.3.1 ATU-C transmitter reference model (replaces figures in 5.1)

See Figures C.1 and C.2.

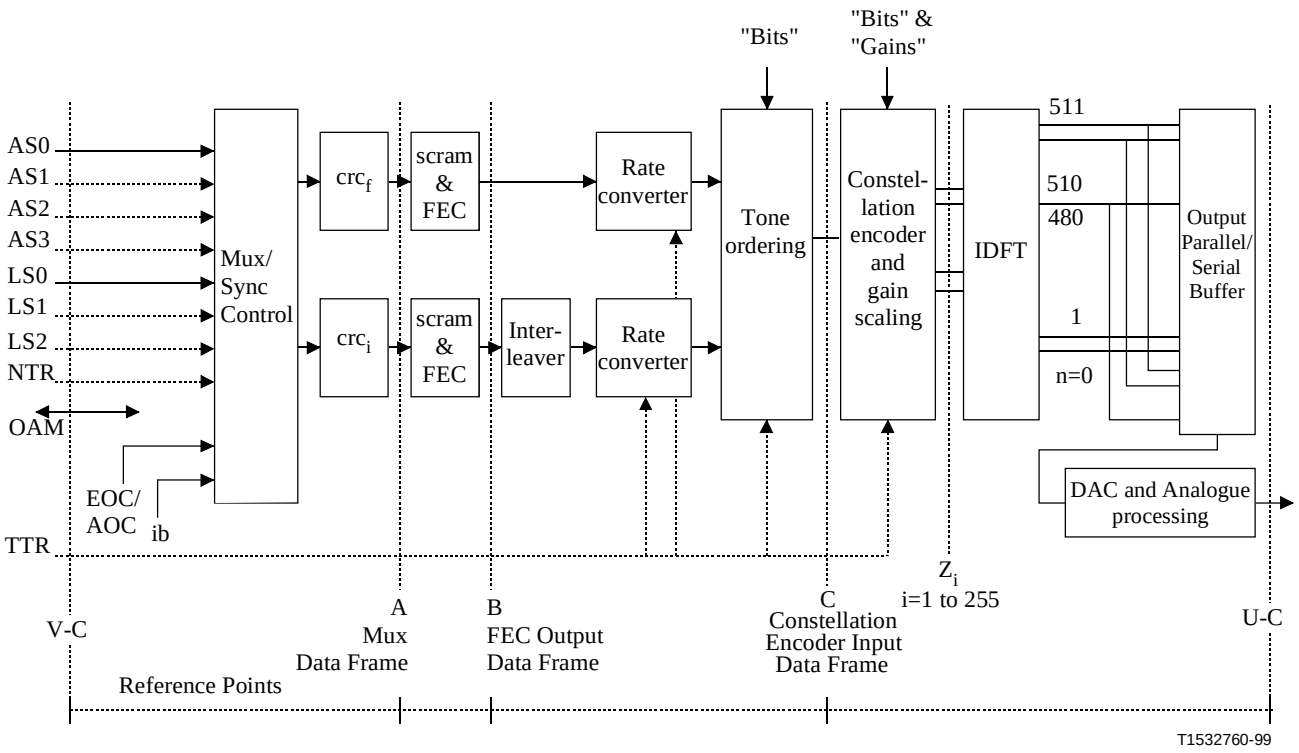

NOTE – The TTR may be generated in ATU-C without being provided from the TCM-ISDN clock.

Figure C.1/G.992.1 – ATU-C transmitter reference model for STM transport

IPR2025-00395
Petitioners' Exhibit 1011
Page 165 of 256

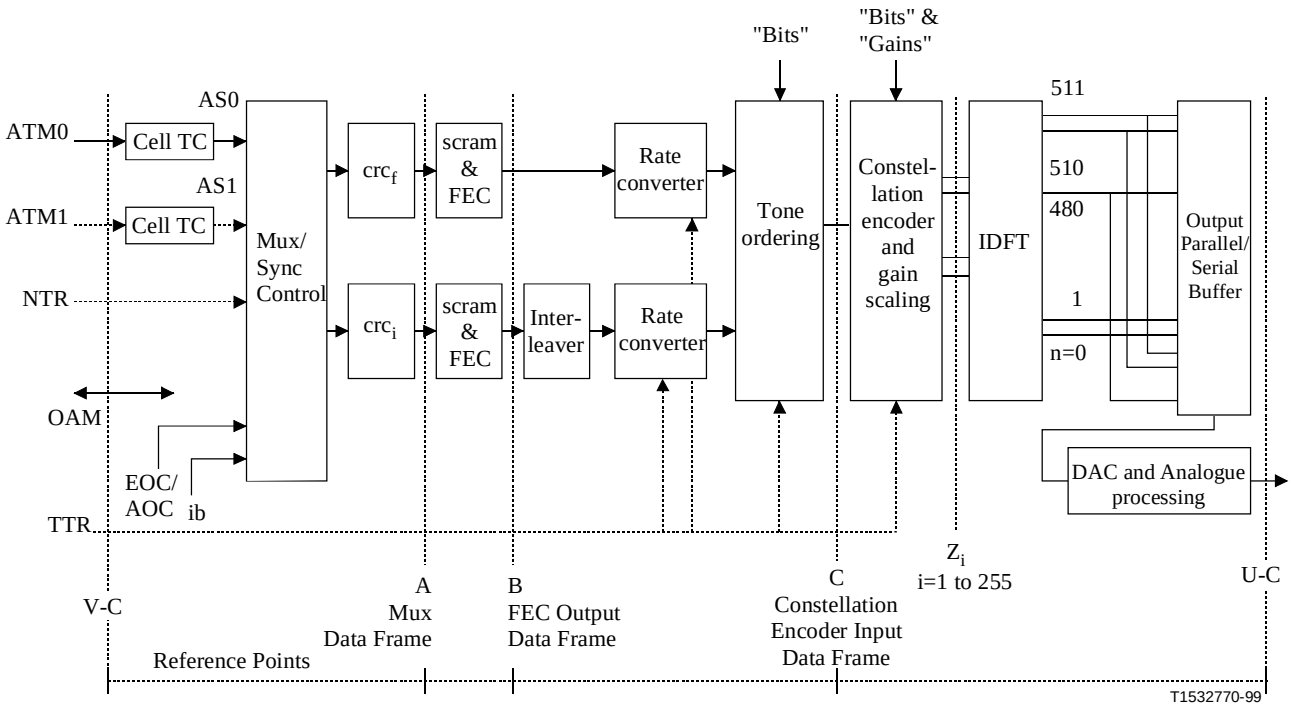

NOTE – The TTR may be generated in ATU-C without being provided from the TCM-ISDN clock.

Figure C.2/G.992.1 – ATU-C transmitter reference model for ATM transport

IPR2025-00395
Petitioners' Exhibit 1011
Page 166 of 256

C.3.2 ATU-R transmitter reference model (replaces figures in 5.2)

See Figures C.3 and C.4.

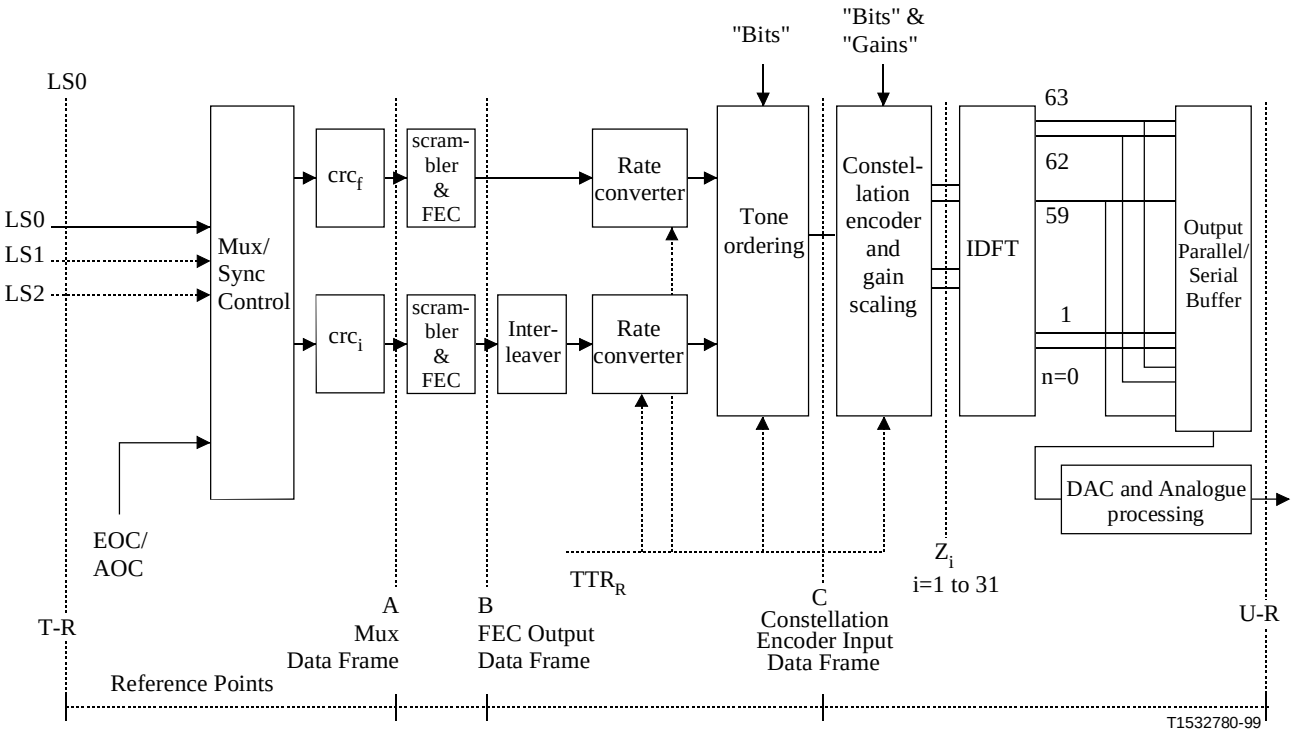

NOTE – The TTR$_R$ shall be generated in ATU-R from the received TTR$_C$ signal, and it is locked to 690 periods of upstream sampling clock (276 kHz).

Figure C.3/G.992.1 – ATU-R transmitter reference model for STM transport

IPR2025-00395
Petitioners' Exhibit 1011
Page 167 of 256

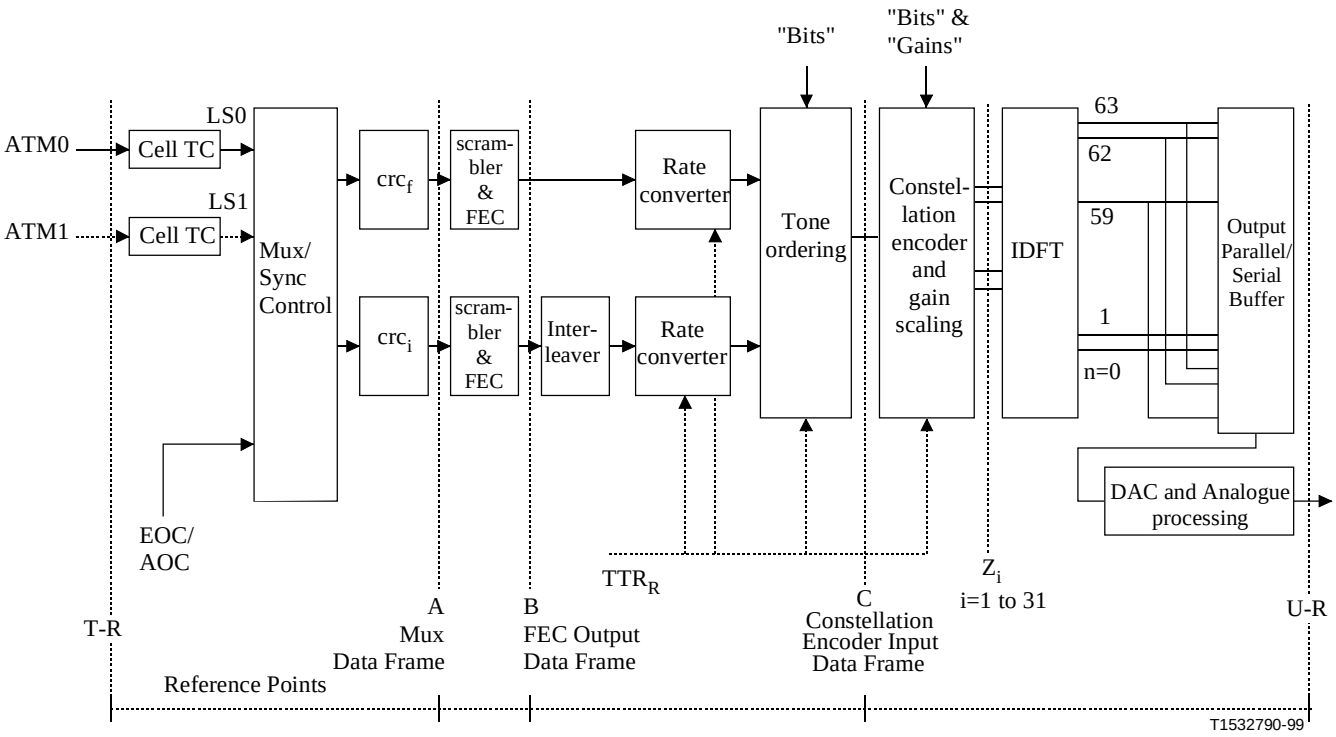

NOTE – The TTR_R shall be generated in ATU-R from the received TTR_C signal, and it is locked to 690 periods of upstream sampling clock (276 kHz).

Figure C.4/G.992.1 – ATU-R transmitter reference model for ATM transport

IPR2025-00395
Petitioners' Exhibit 1011
Page 168 of 256

C.3.3 ATU-C/R transmitter timing model (replacement for 5.3)

C.3.3.1 TCM-ISDN crosstalk timing model (new)

Figure C.5 shows the timing chart of the crosstalk from TCM-ISDN.

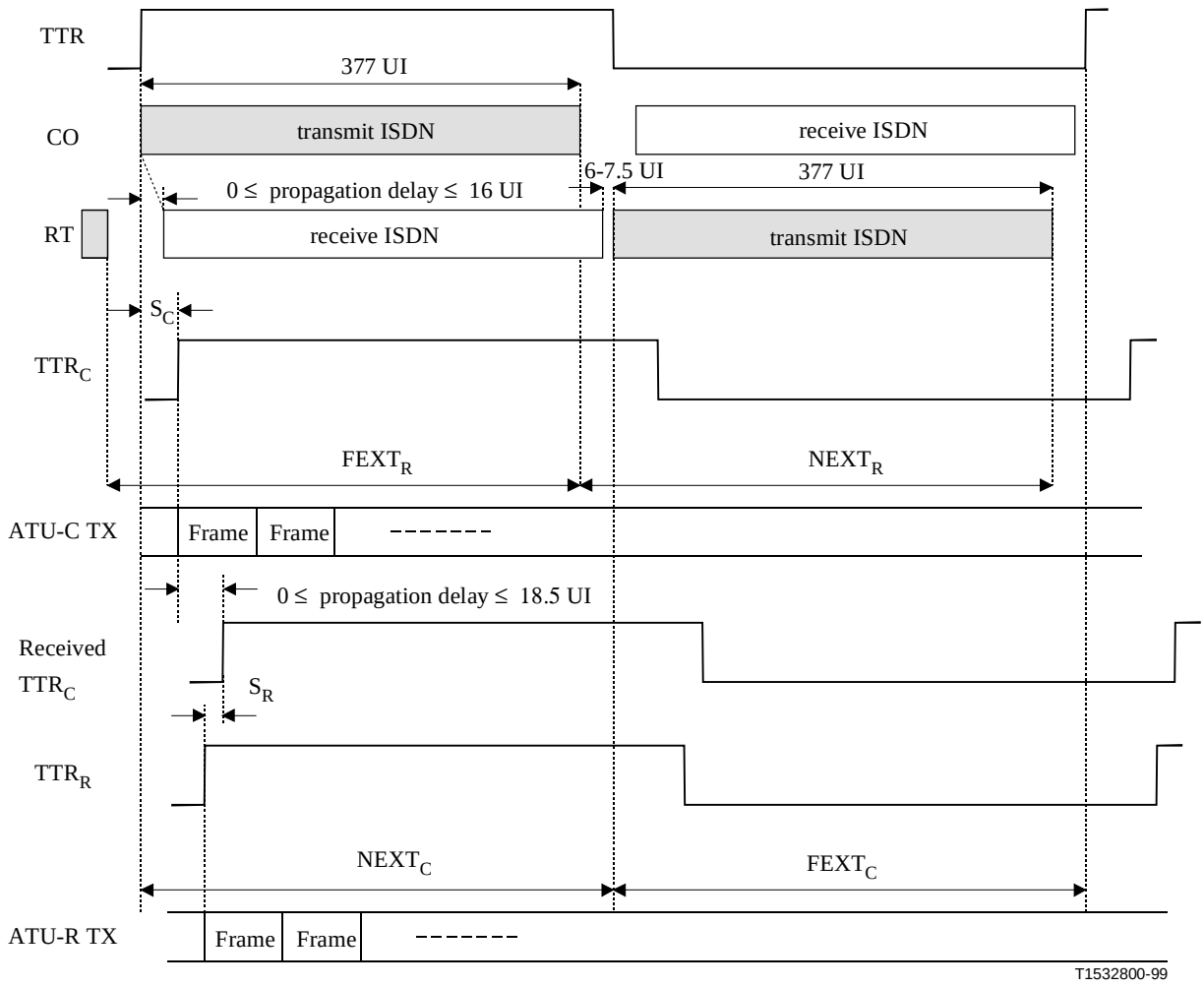

1 UI = 3.125 µs

$FEXT_R$ and **$NEXT_R$** are estimated by ATU-C

$FEXT_C$ and **$NEXT_C$** are estimated by ATU-R

TTR	TCM-ISDN timing reference
TTR_C	Timing reference used in ATU-C
Received TTR_C	Received TTR_C at ATU-R
TTR_R	Timing reference used in ATU-R
S_C	55 × 0.9058 µs: Offset from TTR to TTR_C
S_R	–42 × 0.9058 µs: Offset from received TTR_C to TTR_R

Figure C.5/G.992.1 – Timing chart of the TCM-ISDN crosstalk

The data stream of TCM-ISDN is transmitted in TTR period. CO transmits the stream in the first half of the TTR period and RT transmits in the second half of the TTR period. ATU-C receives NEXT noise from the ISDN in the first half of the TTR period and FEXT noise from the ISDN in the second half of the TCM-ISDN period. On the other hand, ATU-R receives FEXT noise from the ISDN in the first half of the TTR period and NEXT noise from the ISDN in the second half of the TTR period.

IPR2025-00395
Petitioners' Exhibit 1011
Page 169 of 256

As defined in C.7.6.2 and C.7.8.3, the ATU-C shall estimate the $FEXT_R$ and $NEXT_R$ duration at ATU-R, and the ATU-R shall estimate $FEXT_C$ and $NEXT_C$ duration at ATU-C taking propagation delay on the subscribe line into consideration.

The ATU-C shall transmit any symbols by synchronizing with the TTR_C. The ATU-R shall transmit any symbols synchronizing with the TTR_R generated from received TTR_C.

C.3.3.2 Sliding window (new)

Figure C.6 shows the timing chart of the transmission for the Annex C downstream at ATU-C.

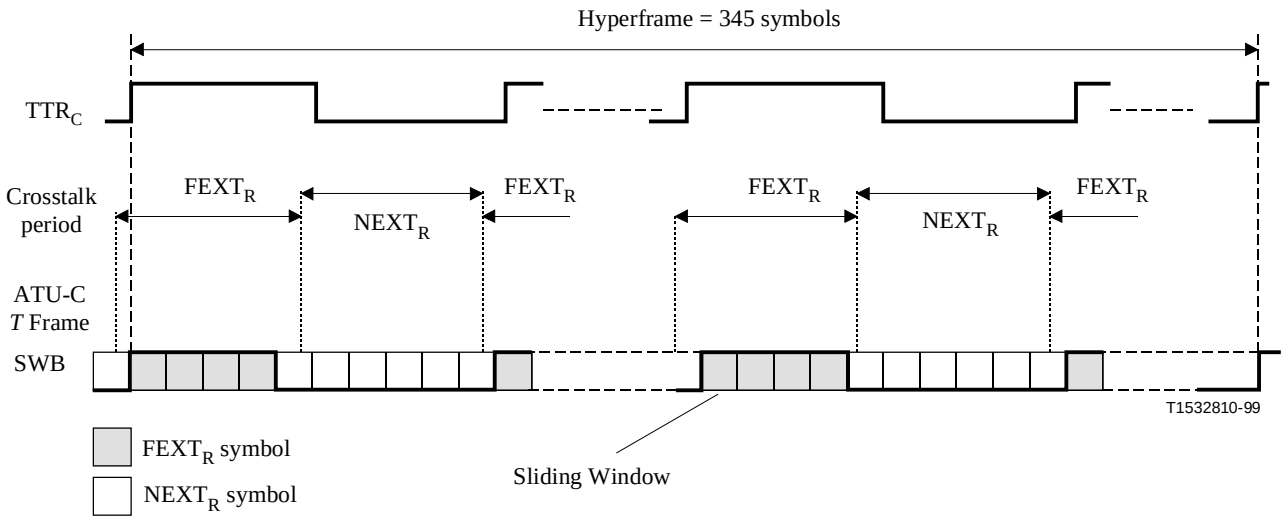

Figure C.6/G.992.1 – Sliding window for downstream symbols

The Sliding Window defines the transmission symbols under the crosstalk noise environment synchronized to the period of TTR. The $FEXT_{C/R}$ symbol represents the symbol completely inside the $FEXT_{C/R}$ duration. The $NEXT_{C/R}$ symbol represents any symbol containing the $NEXT_{C/R}$ duration. Thus, there are more $NEXT_{C/R}$ symbols than $FEXT_{C/R}$ symbols.

The ATU-C decides which transmission symbol is $FEXT_R$ or $NEXT_R$ symbol according to the sliding window and transmits it with the corresponding bit table. Similarly, the ATU-R decides the transmission symbol is a $FEXT_C$ or $NEXT_C$ and transmits it with the corresponding bit table. Although the phase of the sliding window is asynchronous with $TTR_{C/R}$, the pattern is fixed to the 345 frames of the hyperframe.

C.3.3.3 ATU-C Symbol Synchronization to TTR (new)

345 symbols are 34 cycles with cyclic prefix of TTR_C (or 32 cycles of TTR_C without cyclic prefix). This implies a PLL lock at the ATU-R.

C.3.3.4 Dual Bitmap switching (new)

The ATU-C transmits $FEXT_R$ symbols using Bitmap-F_R (in $FEXT_R$ duration), and transmits $NEXT_R$ symbols using Bitmap-N_R (in $NEXT_R$ duration) according to the result of initialization. The ATU-R transmits $FEXT_C$ symbols using Bitmap-F_C (in $FEXT_C$ duration), and transmits $NEXT_C$ symbols using Bitmap-N_C (in $NEXT_C$ duration) in the same manner.

The ATU-C shall have the capability to disable Bitmap-N_C and Bitmap-N_R (see C.4.5 and C.5.3).

IPR2025-00395
Petitioners' Exhibit 1011
Page 170 of 256

C.3.3.5 Loop timing at ATU-R (new)

The phase relation between received symbol and transmitted symbol of ATU-R at the reference point U-R shall meet the phase tolerances as shown in Figure C.7.

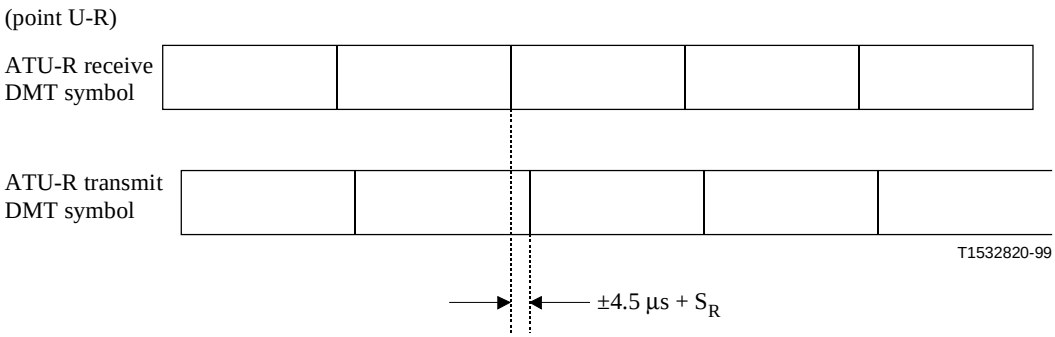

Figure C.7/G.992.1 – Loop timing for ATU-R

IPR2025-00395
Petitioners' Exhibit 1011
Page 171 of 256

C.4 ATU-C functional characteristics (pertains to clause 7)

C.4.1 STM transmission protocols specific functionality (pertains to 7.1)

C.4.1.1 ATU-C input and output V interface for STM transport (replaces figure in 7.1.1)

See Figure C.8.

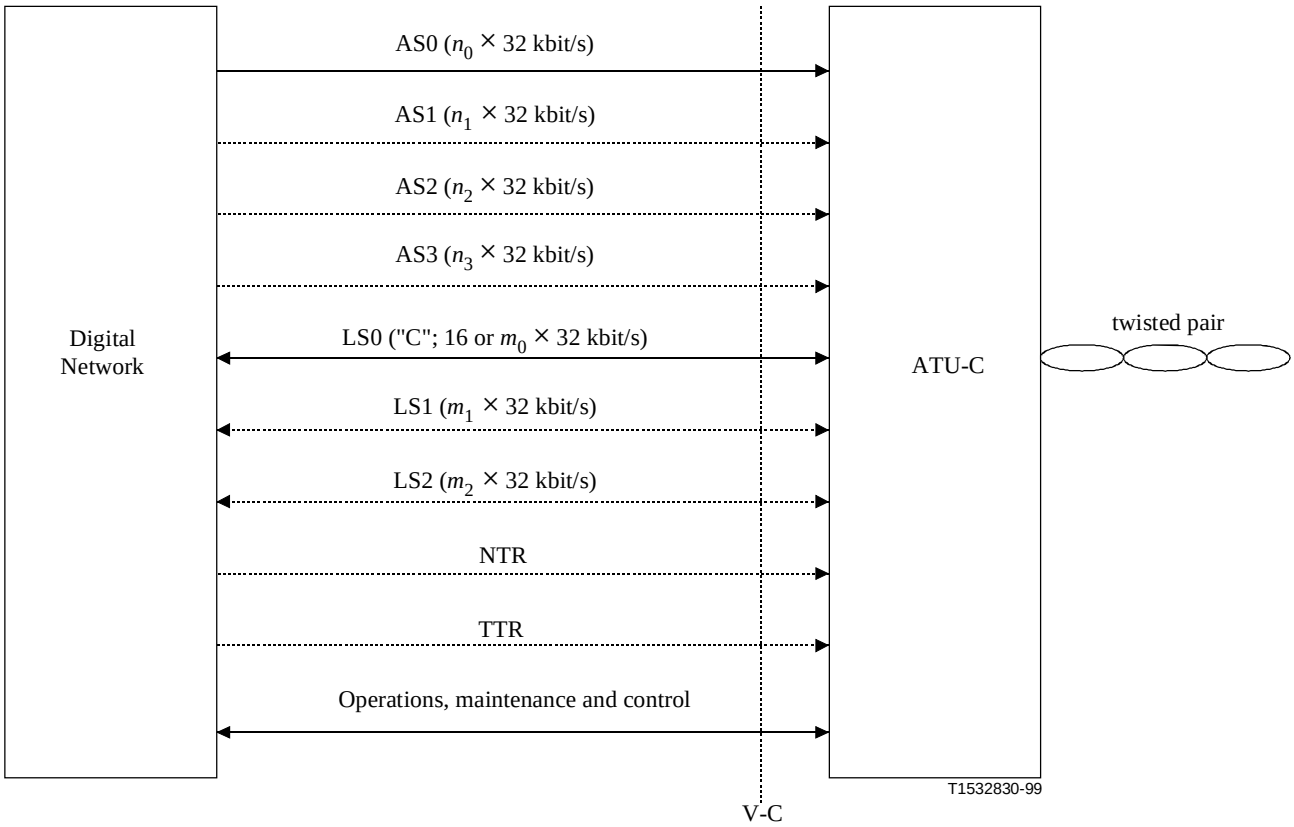

NOTE 1 – Optional bearer channels (both duplex and simplex) and features are shown with dotted lines.
NOTE 2 – TTR may be generated in the ATU-C without being provided from the V-C reference point.

Figure C.8/G.992.1 – ATU-C functional interfaces for STM transport at the V-C reference point

C.4.1.2 Payload transfer delay (supplements 7.1.4)

Since Annex C uses a rate converter, the maximum payload transfer delay is longer than specified values in 7.1.4. The additional one-way transfer delay due to the rate converters shall be less than 1.7 ms for fast data and 13 ms for interleaved data.

IPR2025-00395
Petitioners' Exhibit 1011
Page 172 of 256

C.4.2 ATM transmission protocols specific functionalities (pertains to 7.2)

C.4.2.1 ATU-C Input and Output V interface for ATM transport (replaces figure in 7.2.1)

See Figure C.9.

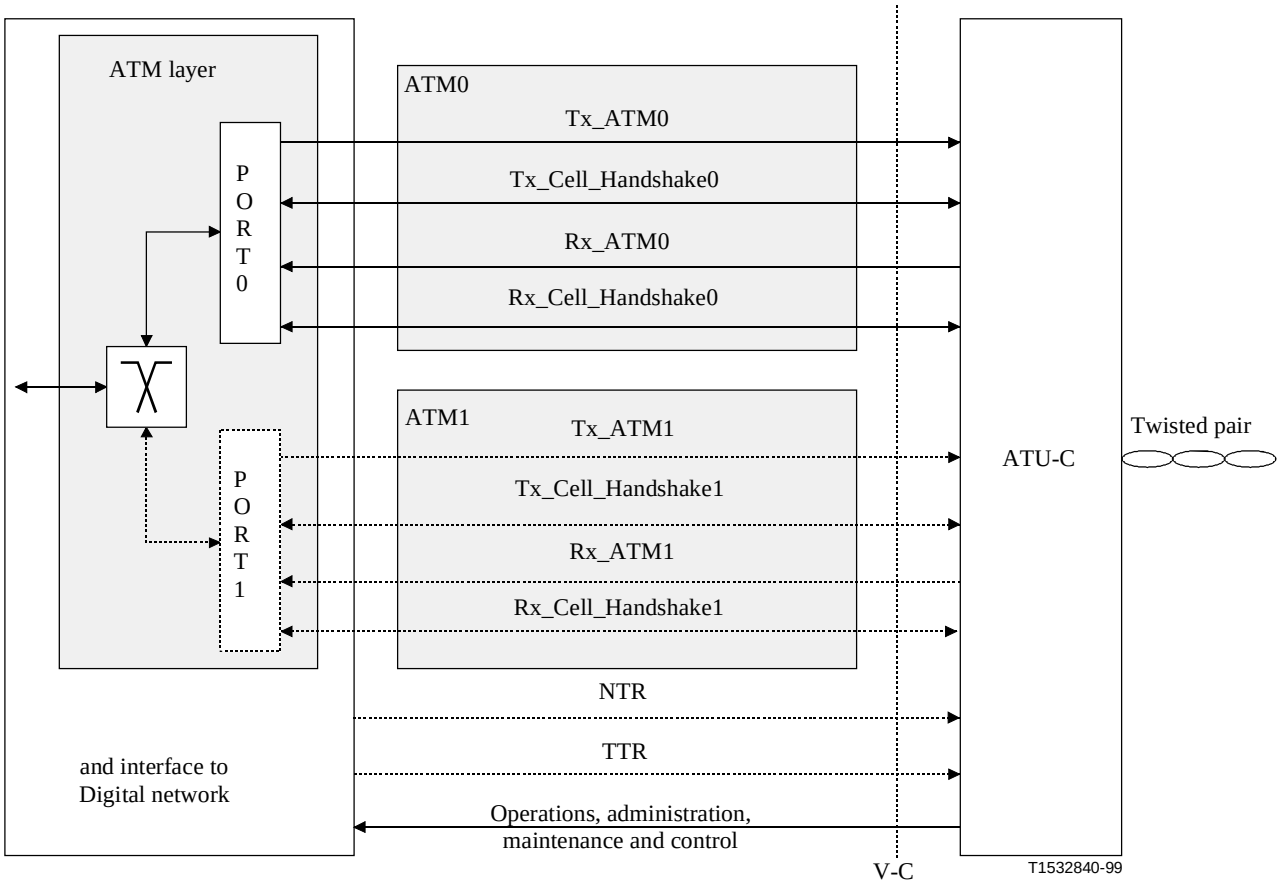

NOTE – TTR can be generated in the ATU-C without being provided from the V-C reference point.

Figure C.9/G.992.1 – ATU-C functional interfaces to the ATM layer at the V-C reference point

C.4.2.2 Payload transfer delay (supplements 7.2.2)

Since Annex C uses a rate converter, the maximum payload transfer delay is longer than specified values in 7.2.2. The additional one-way transfer delay due to the rate converters shall be less than 1.7 ms for fast data and 13 ms for interleaved data.

C.4.3 Framing (pertains to 7.4)

C.4.3.1 Superframe structure (supplements 7.4.1.1)

Since the rate converter reorders the user data and overhead bit-level data to create hyperframes, the input data frames to the constellation encoder are different than those defined in 7.4.1.1.

C.4.3.2 Hyperframe structure (replaces 7.4.1.3)

Annex C uses the hyperframe structure shown in Figure C.10. Figure C.10 shows the phase relationship between the TTR_C and the hyperframe at the point U-C. Each hyperframe is composed of 5 superframes, which are numbered from 0 to 4. In order to indicate the boundary of the hyperframe, the inverse synch symbol is used for the 4th superframe (SPF#3), which is generated

IPR2025-00395
Petitioners' Exhibit 1011
Page 173 of 256

from a tone-by-tone 180-degree phase reversal of the synchronization symbol (see C.4.7.1) except for the pilot tone.

The bit-level data stream from the rate-converter is extracted according to the size of Bitmap-F_R and Bitmap-N_R using the Sliding Window (see C.3.3.2).

In order to make the bit rate to be a multiple of 32 kbit/s, the dummy bits are inserted at the end of hyperframe by the rate converter (see C.4.4.2). The hyperframe is composed of 345 DMT symbols, numbered from 0 to 344. Each symbol is assigned as $FEXT_R$ or $NEXT_R$ symbol in a $FEXT_R$ or $NEXT_R$ duration (see C.2), and the following numerical formula gives the information which duration N_{dmt}-th DMT symbol belongs to at ATU-C transmitter (see Figure C.11).

For $N_{dmt} = 0, 1, ..., 344$

$S = 272 \times N_{dmt} \bmod 2760$

if { $(S + 271 < a)$ or $(S > a + b)$ } then $FEXT_R$ symbol

else then $NEXT_R$ symbol

where $a = 1243$, $b = 1461$

Thus, 128 DMT symbols are allocated in the $FEXT_R$ duration, and 217 DMT symbols are allocated in the $NEXT_R$ duration. The symbols are composed of:

$FEXT_R$ symbol:

Number of symbol using Bitmap-F_R	= 126
Number of synch symbol	= 1
Number of inverse synch symbol	= 1

$NEXT_R$ symbol:

Number of symbol using Bitmap-N_R	= 214
Number of synch symbol	= 3

During FEXT Bitmap mode, the ATU-C shall transmit only the pilot tone in $NEXT_R$ symbols.

IPR2025-00395
Petitioners' Exhibit 1011
Page 174 of 256

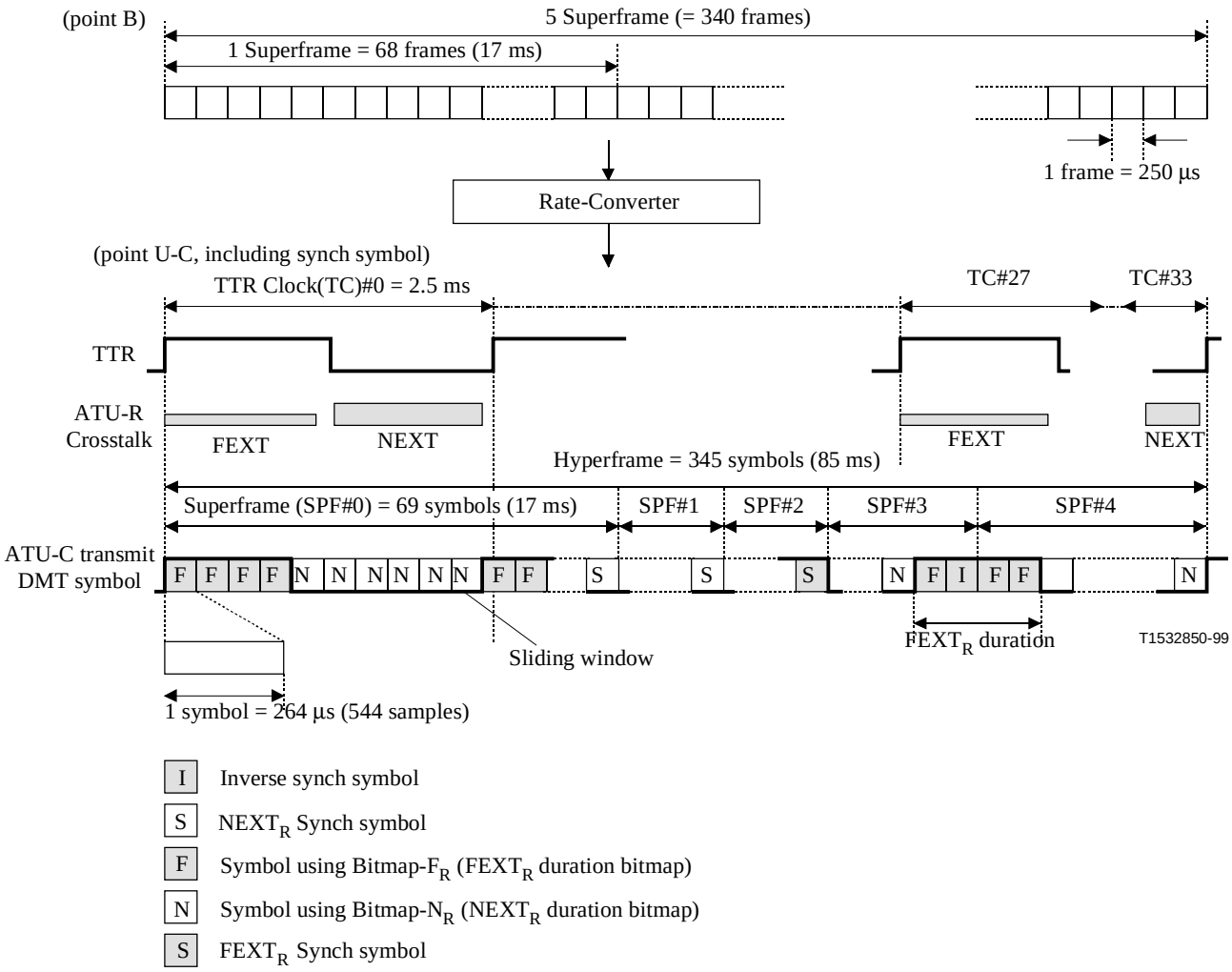

I Inverse synch symbol

S NEXT$_R$ Synch symbol

F Symbol using Bitmap-F$_R$ (FEXT$_R$ duration bitmap)

N Symbol using Bitmap-N$_R$ (NEXT$_R$ duration bitmap)

S FEXT$_R$ Synch symbol

Figure C.10/G.992.1 – Hyperframe structure for downstream

IPR2025-00395
Petitioners' Exhibit 1011
Page 175 of 256

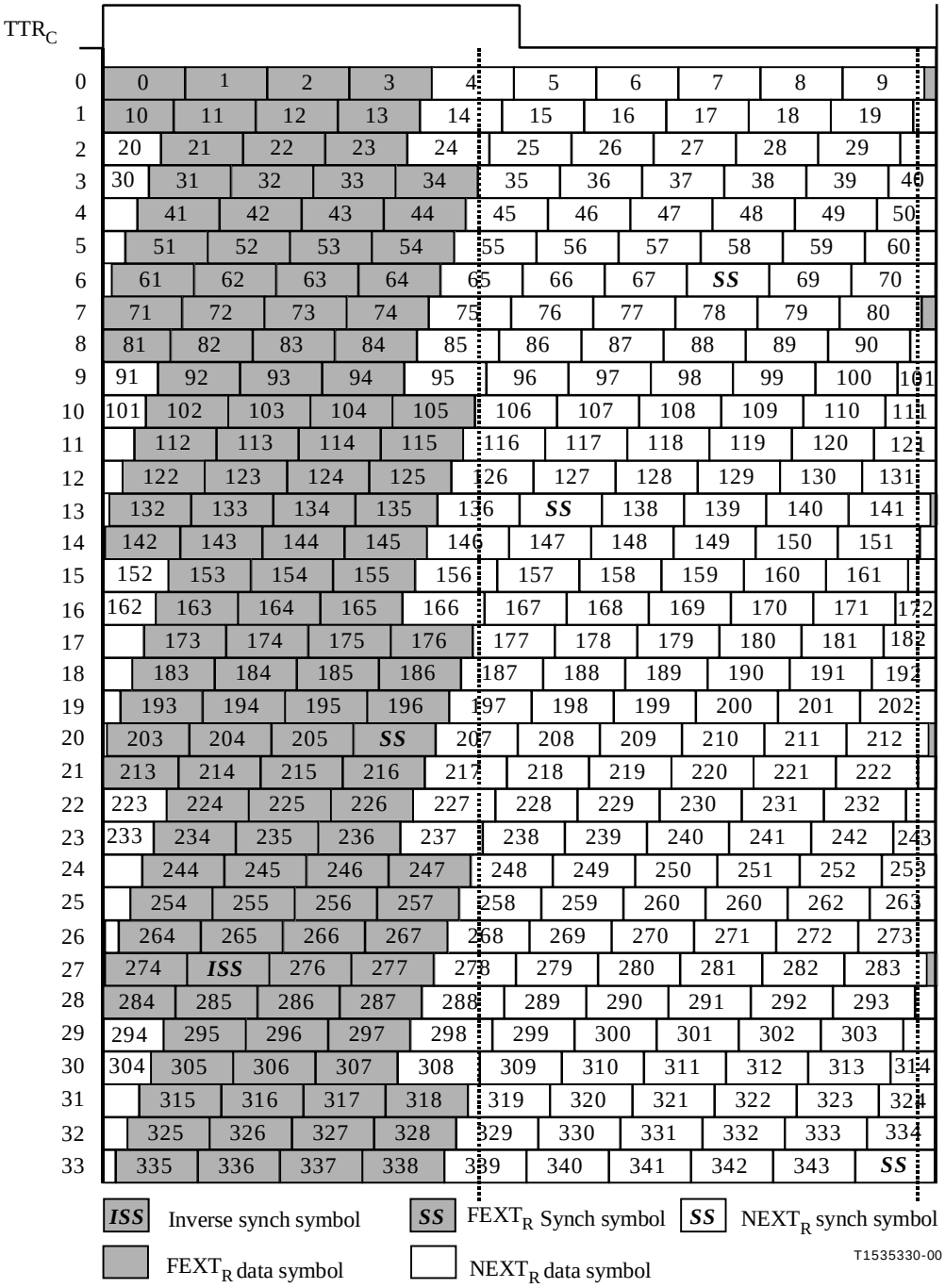

Figure C.11/G.992.1 – Symbol pattern in a hyperframe with cyclic prefix – Downstream

IPR2025-00395
Petitioners' Exhibit 1011
Page 176 of 256

C.4.3.3 Subframe Structure (replaces 7.4.1.4)

A subframe is 10 consecutive DMT symbols (except for synch symbols) as shown in Table C.1. The 34 subframes form a hyperframe.

Table C.1/G.992.1 – Subframe (downstream)

Subframe No.	DMT symbol No.	Note
0	0-9	
1	10-19	
2	20-29	
3	30-39	
4	40-49	
5	50-59	
6	60-70	#68 is Synch Symbol
7	71-80	
8	81-90	
9	91-100	
10	101-110	
11	111-120	
12	121-130	
13	131-141	#137 is Synch Symbol
14	142-151	
15	152-161	
16	162-171	
17	172-181	
18	182-191	
19	192-201	
20	202-212	#206 is Synch Symbol
21	213-222	
22	223-232	
23	233-242	
24	243-252	
25	253-262	
26	263-272	
27	273-283	#275 is Inverse Synch Symbol
28	284-293	
29	294-303	
30	304-313	
31	314-323	
32	324-333	
33	334-344	#344 is Synch Symbol

IPR2025-00395
Petitioners' Exhibit 1011
Page 177 of 256

C.4.4 Dual Bitmapping and Rate Conversion (replaces 7.15)

The functions of the rate converter (see C.4.4.2), tone ordering (see C.4.6), constellation encoding, and gain scaling shall use one of two bitmaps stored in the ATU. This method is called the dual bitmap.

C.4.4.1 Dual Bitmap (new)

The Dual Bitmap method has individual bit rates under the FEXT and NEXT noise, and this needs an additional bit and gain table, $\{b_i, g_i\}$, and ordered bit table, b'_i, for the tone ordering. The dual bitmaps are switched synchronized with the sliding window pattern of NEXT/FEXT symbols. The number of bits and the relative gains to be used for every tone are calculated in the bit loading algorithm during the initialization sequence, and transmitted in R-B&G.

C.4.4.2 Rate Converter (new)

The rate converter buffering changes the data frame boundaries between the reference points B and C according to Bitmap-F_R, Bitmap-N_R and the Sliding Window. Two independent rate converters are prepared for fast data and interleaved data. The amount of fast and interleaved data in Bitmap-F_R and Bitmap-N_R shall be calculated with the following formulae and illustrated in Figure C.12:

If $t_{Rf} \le n_{R\max}$:

$$n_{Rf} = t_{Rf}$$

$$n_{Ri} = n_R - n_{Rf}$$

$$f_{Rf} = t_{Rf}$$

$$f_{Ri} = f_R - f_{Rf}$$

If $t_{Rf} > n_{R\max}$:

$$n_{Rf} = n_{R\max}$$

$$n_{Ri} = 0$$

$$f_{Rf} = \begin{cases} f_{Rf4} = \left\lceil \dfrac{t_{Rf} \times 10 - n_{Rf} \times 6}{4} \right\rceil \\ f_{Rf3} = \left\lceil \dfrac{t_{Rf} \times 10 - n_{Rf} \times 7}{3} \right\rceil \end{cases}$$

$$f_{Ri} = \begin{cases} f_{Ri4} = f_R = f_{Rf4} \\ f_{Ri3} = f_R - f_{Rf3} \end{cases}$$

Where:

t_{Rf} is the number of allocated bits in one frame for fast bytes at the reference point B.

t_{Ri} is the number of allocated bits for interleaved bytes at the reference point B.

f_{Rf} and n_{Rf} are the numbers of fast bits in Bitmap-F_R and Bitmap-N_R, respectively.

f_{Rf3} is the number of fast bits in Bitmap-F_R if the subframe (see C.4.3.3) contains 3 Bitmap-F_R except for synch symbols.

IPR2025-00395
Petitioners' Exhibit 1011
Page 178 of 256

f_{Rf4} is the number of fast bits in Bitmap-F_R if the subframe contains 4 Bitmap-F_R except for synch symbols.

f_{Ri} and n_{Ri} are the numbers of interleaved bits in Bitmap-F_R and Bitmap-N_R, respectively.

n_R is the number of total bits in Bitmap-N_R, which is specified in the B&G tables.

During FEXT Bitmap mode, n_{Rf} and n_{Ri} are zero.

To convert the bit rate to be a multiple of 32 kbit/s, the dummy bits for fast data are inserted to the tail of each subframe, and the dummy bits for interleaved data are inserted to the end of the Hyperframe. The number of the dummy bits shall be as follows:

If $t_{Rf} \le n_{R\max}$:

$$dummy_{Rf} = 0$$

$$dummy_{Ri} = \left(f_{Ri} \times 126 + n_{Ri} \times 214\right) - t_{Ri} \times 340$$

If $t_{Rf} > n_{R\max}$:

$$dummy_{Rf4} = \left(f_{Rf} \times 4 + n_{Rf} \times 6\right) - t_{Rf} \times 10$$

$$dummy_{Rf3} = \left(f_{Rf} \times 3 + n_{Rf} \times 7\right) - t_{Rf} \times 10$$

$$dummy_{Ri} = \left(f_{Ri4} \times 96 + f_{Ri3} \times 30\right) - t_{Ri} \times 340$$

If the fast data buffer uses single latency only, the dummy bits are inserted at the tail of each FEXT symbol in the 4 Bitmap-F_R constructed subframe. The number of dummy bits shall be as follows:

$$dummy_{SRf} = f_{Rf3} - f_{Rf4}$$

The receiver shall determine Bitmap-F_R and Bitmap-N_R so that $dummy_{Ri}$ is less than 126 in the initialization sequence. At the receiver, the inserted dummy bits shall be removed.

IPR2025-00395
Petitioners' Exhibit 1011
Page 179 of 256

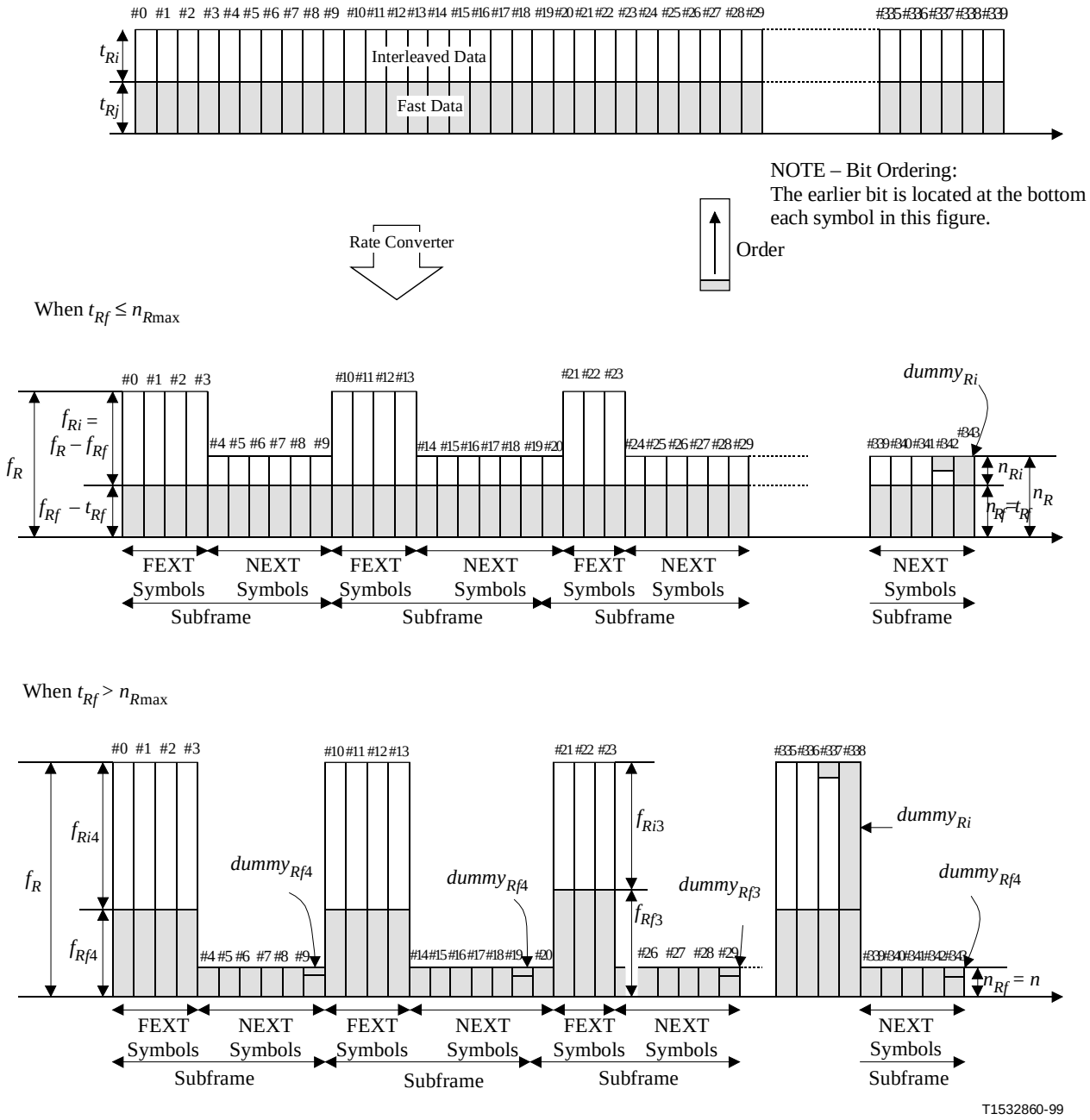

Figure C.12/G.992.1 – Bit distribution for Rate Converter under Dual latency and Dual Bitmap mode

C.4.5 FEXT Bitmapping (replaces 7.16)

The FEXT Bitmapping mode uses the Dual Bitmapping technique (C.4.4) to transmit data only during FEXT. The ATU-C shall transmit only the pilot tone during the $NEXT_R$ symbol. The ATU-R disables Bitmap-N_C and shall not transmit any signal during the $NEXT_C$ symbol (see Figures C.10 and C.13).

The Dual versus FEXT bitmapping mode is selected during G.994.1 using bit "DBM" (see 10.2 and 10.3).

IPR2025-00395
Petitioners' Exhibit 1011
Page 180 of 256

C.4.6 Tone Ordering (replacement for 7.7)

A DMT time-domain signal has a high peak-to-average ratio (its amplitude distribution is almost Gaussian), and large values may be clipped by the digital-to-analogue converter. The error signal caused by clipping can be considered as an additive negative impulse for the time sample that was clipped. The clipping error power is almost equally distributed across all tones in the symbol in which clipping occurs. Clipping is therefore most likely to cause errors on those tones that, in anticipation of a higher received SNR, have been assigned the largest number of bits (and therefore have the densest constellations). These occasional errors can be reliably corrected by the FEC coding if the tones with the largest number of bits have been assigned to the interleave buffer.

The numbers of bits and the relative gains in two bitmaps to be used for every tone are calculated in ATU-R receiver, and sent back to ATU-C according to a defined protocol (see 10.9.14). The pairs of numbers are typically stored, in ascending order of frequency or tone numbers *i*, in bit and gain tables for Bitmap-F_R and Bitmap-N_R.

For Bitmap-F_R, the "tone-ordered" encoding shall first assign f_{Rf} bits from the rate converter (see C.4.4.2) to the tones with the smallest number of bits assigned to them, and the remaining f_{Ri} bits to the remaining tones. For Bitmap-N_R, it shall first assign n_{Rf} bits from the rate converter to the tones with the smallest number of bits assigned to them, and the remaining n_{Ri} bits to the remaining tones.

All tones shall be encoded with the number of bits assigned to them; one tone in each bitmap may therefore have a mixture of bits from the fast and interleaved buffers.

The ordered bit tables b'_{iF} and b'_{iN} shall be based on the original bit tables b_{iF} and b_{iN} as follows:

For k = 0 to 15 {

From the bit table, find the set of all i with the number of bits per tone $b_i = k$

Assign b_i to the ordered bit allocation table in ascending order of i

}

Two ordered bit tables for Bitmap-F_R and Bitmap-N_R shall be prepared. A complementary de-ordering procedure should be performed in ATU-R receiver. It is not necessary, however, to send the results of the ordering process to the receiver because the bit tables F_R and N_R were originally generated in ATU-R, and therefore those tables have all the information necessary to perform the de-ordering.

C.4.7 Modulation (pertains to 7.11)

C.4.7.1 Inverse Synchronization Symbol (replaces 7.11.4)

Except for the pilot tone, Inverse Synchronization symbol shall be generated from a tone-by-tone 180 degree phase reversal of Synchronization symbol (i.e. + maps to –, and – maps to +, for each of the 4-QAM signal constellation).

C.4.8 ATU-C Downstream transmit spectral mask (replaces 7.14)

The downstream spectral mask of Annex C shall use the same masks as Annex A. When C-MSG1 bit 16 is 0, the PSD mask specified in A.1.3 shall be used. When C-MSG1 bit 16 is 1, the PSD mask specified in A.1.2 shall be used.

IPR2025-00395
Petitioners' Exhibit 1011
Page 181 of 256

C.5 ATU-R Functional Characteristics (pertains to clause 8)

C.5.1 Framing (pertains to 8.4)

C.5.1.1 Superframe structure (replaces 8.4.1.1)

The superframe structure of ATU-R transmitter is identical to that of ATU-C transmitter, as specified in C.4.3.1.

C.5.1.2 Hyperframe structure (replaces 8.4.1.3)

The hyperframe structure of ATU-R transmitter is functionally similar to that of ATU-C transmitter, except that the inverse synch symbol is used in the 1st superframe (SPF#0) (see Figure C.13). The hyperframe is composed of 345 DMT symbols, numbered from 0 to 344. Each symbol is under $FEXT_C$ or $NEXT_C$ duration (see C.5.3), and the following numerical formula gives the information which duration N_{dmt}-th DMT symbol belongs to at ATU-R transmitter (see Figure C.14).

For $N_{dmt} = 0, 1, \ldots, 344$

$S = 272 \times N_{dmt} \bmod 2760$

if { (S > a) and (S + 271 < a + b) } then $FEXT_C$ symbol

else then $NEXT_C$ symbol

where a = 1315, b = 1293

128 DMT symbols are allocated in the $FEXT_C$ duration, and 217 DMT symbols are allocated in the $NEXT_C$ duration. The symbols are composed of:

$FEXT_C$ symbol:

Number of symbol using Bitmap-F_C	= 126
Number of synch symbol	= 1
Number of inverse synch symbol	= 1

$NEXT_C$ symbol:

Number of symbol using Bitmap-N_C	= 214
Number of synch symbol	= 3

During FEXT Bitmapping mode, the ATU-R shall not transmit any signal.

IPR2025-00395
Petitioners' Exhibit 1011
Page 182 of 256

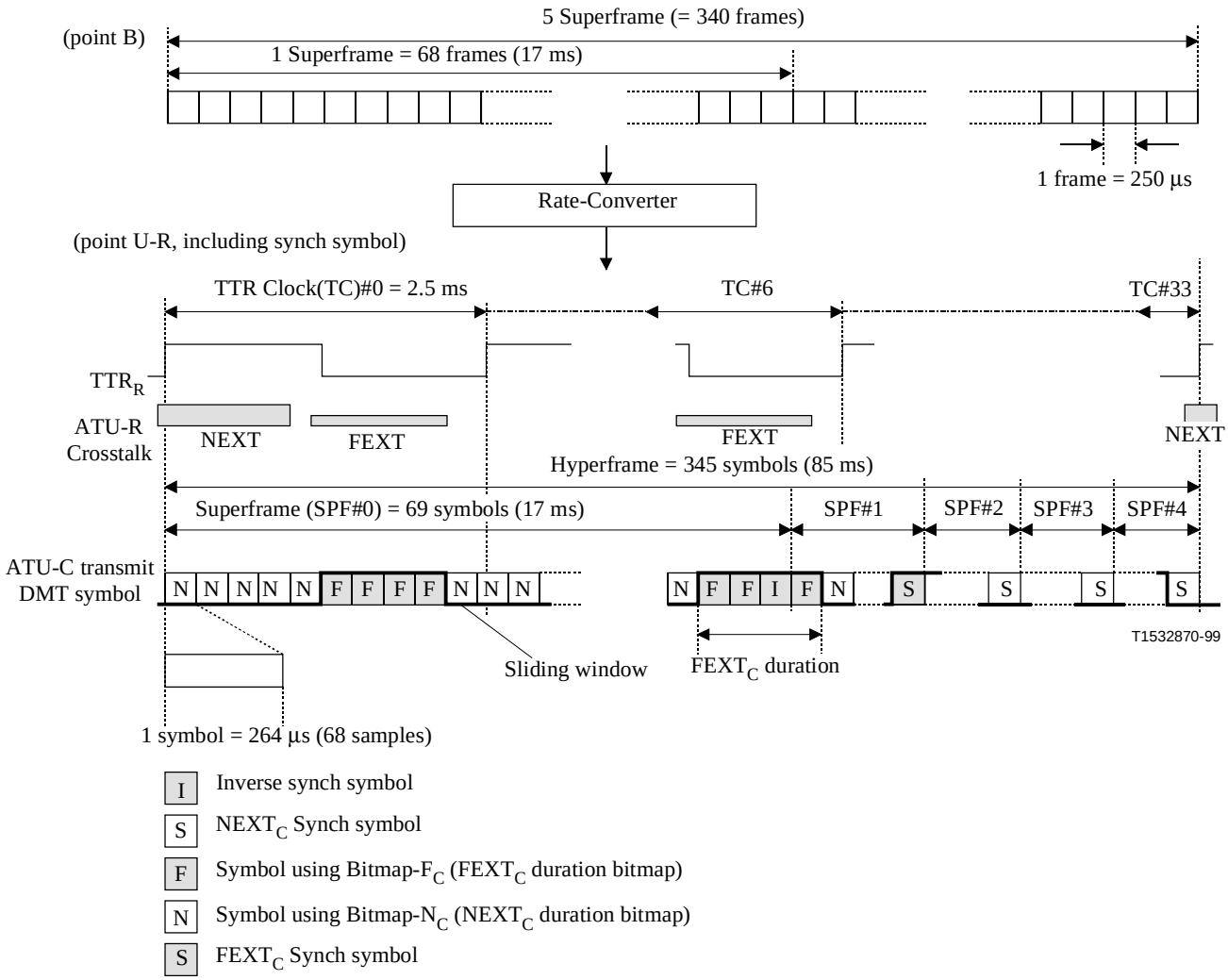

I Inverse synch symbol

S NEXT$_C$ Synch symbol

F Symbol using Bitmap-F$_C$ (FEXT$_C$ duration bitmap)

N Symbol using Bitmap-N$_C$ (NEXT$_C$ duration bitmap)

S FEXT$_C$ Synch symbol

Figure C.13/G.992.1 – Hyperframe structure for upstream

IPR2025-00395
Petitioners' Exhibit 1011
Page 183 of 256

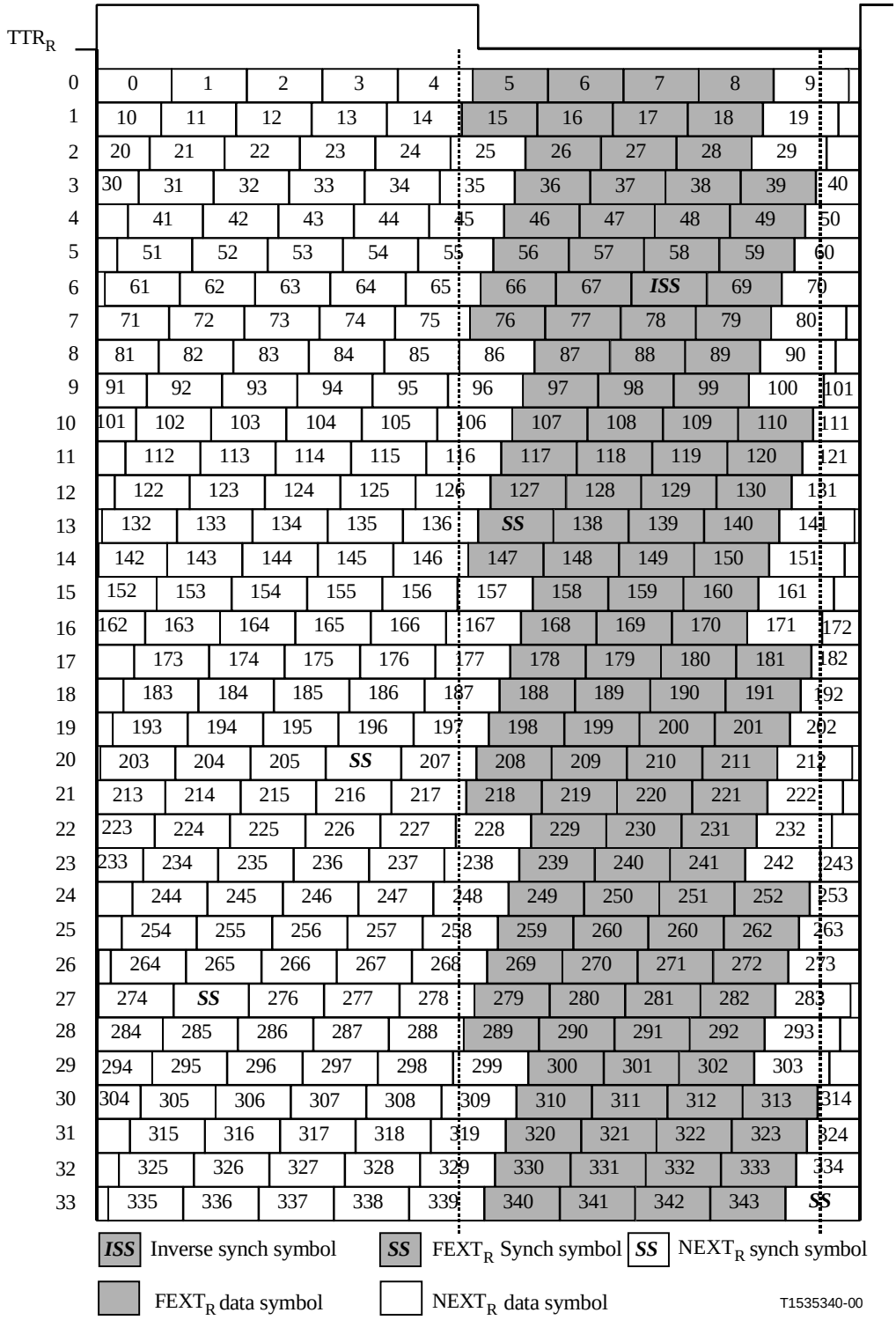

Figure C.14/G.992.1 – Symbol pattern in a hyperframe with cyclic prefix – Upstream

C.5.1.3 Subframe structure (replaces 8.4.1.4)

A subframe is 10 consecutive DMT symbols (except for synch symbols) as shown in Table C.2. The 34 subframes form a hyperframe.

IPR2025-00395
Petitioners' Exhibit 1011
Page 184 of 256

Table C.2/G.992.1 – Subframe (upstream)

Subframe No.	DMT symbol No.	Note
0	0-9	
1	10-19	
2	20-29	
3	30-39	
4	40-49	
5	50-59	
6	60-70	#68 is Inverse Synch Symbol
7	71-80	
8	81-90	
9	91-100	
10	101-110	
11	111-120	
12	121-130	
13	131-141	#137 is Synch Symbol
14	142-151	
15	152-161	
16	162-171	
17	172-181	
18	182-191	
19	192-201	
20	202-212	#206 is Synch Symbol
21	213-222	
22	223-232	
23	233-242	
24	243-252	
25	253-262	
26	263-272	
27	273-283	#275 is Synch Symbol
28	284-293	
29	294-303	
30	304-313	
31	314-323	
32	324-333	
33	334-344	#344 is Synch Symbol

C.5.2 Dual Bitmapping and rate conversion (replaces 8.15)

The function of the rate converter (see C.5.2.2), tone ordering (see C.5.4), constellation encoding, and gain scaling shall use one of two bitmaps stored in the ATU. This method is called the dual bitmap.

IPR2025-00395
Petitioners' Exhibit 1011
Page 185 of 256

C.5.2.1 Dual Bitmap (new)

The Dual Bitmap switching shall be the same as for the downstream data, specified in C.4.4.1. The number of bits and the relative gains to be used for every tone are calculated in the bit loading algorithm during the initialization sequence, and transmitted in C-B&G.

C.5.2.2 Rate Converter (new)

The rate converter buffering changes the data frame boundaries between the reference points B and C according to Bitmap-F_C, Bitmap-N_C and the Sliding Window. Two independent rate converters are prepared for fast data and interleaved data. The amounts of fast and interleaved data in Bitmap-F_C and Bitmap-N_C shall be calculated in the following formulae:

If $t_{Cf} \le n_{Cmax}$:

$$n_{Cf} = t_{Cf}$$

$$n_{Ci} = n_C - n_{Cf}$$

$$f_{Cf} = t_{Cf}$$

$$f_{Ci} = f_C - f_{Cf}$$

If $t_{Cf} > n_{Cmax}$:

$$n_{Cf} = n_{C\max}$$

$$n_{Ci} = 0$$

$$f_{Cf} = \begin{cases} f_{Cf4} = \left\lceil \dfrac{t_{Cf} \times 10 - n_{Cf} \times 6}{4} \right\rceil \\ f_{Cf3} = \left\lceil \dfrac{t_{Cf} \times 10 - n_{Cf} \times 7}{3} \right\rceil \end{cases}$$

$$f_{Ci} = \begin{cases} f_{Ci4} = f_C - f_{C4} \\ f_{Ci3} = f_C - f_{Cf3} \end{cases}$$

Where:

t_{Cf} is the number of allocated bits in one frame for fast bytes at the reference point B.

t_{Ci} is the number of allocated bits for interleaved bytes at the reference point B.

f_{Cf} and n_{Cf} are the numbers of fast bits in Bitmap-F_C and Bitmap-N_C, respectively.

f_{Cf3} is the number of fast bits in Bitmap-F_C if the subframe (see C.5.1.3) contains 3 Bitmap-F_C except for synch symbols.

f_{Cf4} is the number of fast bits in Bitmap-F_C if the subframe contains 4 Bitmap-F_C except for synch symbols.

f_{Ci} and n_{Ci} are the numbers of interleaved bits in Bitmap-F_C and Bitmap-N_C, respectively.

n_C is the number of total bits in Bitmap-N_C, which is specified in the B&G tables.

During FEXT Bitmap mode, n_{Cf} and n_{Ci} are zero.

IPR2025-00395
Petitioners' Exhibit 1011
Page 186 of 256

To convert the bit rate to be a multiple of 32 kbit/s, the dummy bits for fast data are inserted to the tail of each subframe, and the dummy bits for interleaved data are inserted to the end of the Hyperframe. The number of the dummy bits shall be as follows:

If $t_{Cf} \leq n_{Cmax}$:

$$dummy_{Cf} = 0$$

$$dummy_{Ci} = \left(f_{Ci} \times 126 + n_{Ci} \times 214\right) - t_{Ci} \times 340$$

If $t_{Cf} > n_{Cmax}$:

$$dummy_{Cf\,4} = \left(f_{Cf} \times 4 + n_{Cf} \times 6\right) - t_{Cf} \times 10$$

$$dummy_{Cf\,3} = \left(f_{Cf} \times 3 + n_{Cf} \times 7\right) - t_{Cf} \times 10$$

$$dummy_{Ci} = \left(f_{Ci4} \times 96 + f_{Ci3} \times 30\right) - t_{Ci} \times 340$$

If the fast data buffer uses single latency only, the dummy bits are inserted at the tail of each FEXT symbol in the 4 Bitmap-F_R constructed subframe. The number of dummy bits shall be as follows:

$$dummy_{Ci} = \left(f_{Ci4} \times 96 + f_{Ci3} \times 30\right) - t_{Ci} \times 340$$

The receiver shall determine Bitmap-F_C and Bitmap-N_C so that $dummy_{Ci}$ is less than 126 in the initialization sequence. At the receiver, the inserted dummy bits shall be removed.

C.5.3 FEXT Bitmapping (replaces 8.16)

The FEXT Bitmapping mode uses the Dual Bitmapping technique (C.4.4) to transmit data only during FEXT. The ATU-C shall transmit only the pilot tone during the $NEXT_R$ symbol. The ATU-R disables Bitmap-N_C and shall not transmit any signal during the $NEXT_C$ symbol (see Figures C.10 and C.13).

The Dual versus FEXT bitmapping mode is selected during G.994.1 using bit "DBM" (see 10.2 and 10.3).

C.5.4 Tone Ordering (pertains to 8.7)

The tone ordering algorithm shall be the same as for the downstream data, specified in C.4.4.

For Bitmap-F_C, the "tone-ordered" encoding shall first assign f_{Cf} bits from the rate converter (see C.5.2.2) to the tones with the smallest number of bits assigned to them, and the remaining f_{Ci} bits to the remaining tones. For Bitmap-N_C, it shall first assign n_{Cf} bits from the rate converter to the tones with the smallest number of bits assigned to them, and the remaining n_{Ci} bits to the remaining tones. Two ordered bit tables for Bitmap-F_C and Bitmap-N_C shall be prepared.

C.5.5 Modulation (pertains to 8.11)

C.5.5.1 Inverse synchronization symbol (replaces 8.11.4)

Inverse Synchronization symbol shall be generated from a tone-by-tone 180 degree phase reversal of Synchronization symbol (i.e. + maps to –, and – maps to +, for each of the 4-QAM signal constellation).

C.5.5.2 Gain scaling in synchronization symbol (new)

At initialization time, the sync symbol reference transmit PSD level shall be set at the nominal PSD level $+10\log(g_{sync}^2)$ dBm/Hz, with g_{sync}^2 defined as the average g_i^2 value over the used (i.e. $b_i > 0$) subcarriers in the NEXT or FEXT bitmap, whichever results in the highest average gain. The sync

IPR2025-00395
Petitioners' Exhibit 1011
Page 187 of 256

symbol reference transmit PSD shall not be updated with used subcarrier gain changes during SHOWTIME.

C.5.6 ATU-R Upstream Transmit Spectral Mask (supplements 8.14)

The upstream spectral mask of Annex C uses the same mask as Annex A.

C.6 EOC Operation and Maintenance (pertains to clause 9)

C.6.1 ADSL line related primitives (supplements 9.3.1)

C.6.1.1 ADSL line related near-end defects (supplements 9.3.1.3)

Two near-end defects are further defined:

- *Loss-of-signal (LOS)*: The ADSL power shall be measured only in the $FEXT_C$ duration at ATU-C, or only in the $FEXT_R$ duration at ATU-R.
- *Severely errored frame (SEF)*: A SEF defect occurs when the content of two consecutively received ADSL synchronization symbols in the $FEXT_C$ duration at ATU-C, or in the $FEXT_R$ duration at ATU-R, does not correlate with the expected content over a subset of the tones. An SEF defect terminates when the content of two consecutively received ADSL synchronization symbols in the $FEXT_C$ duration at ATU-C, or in the $FEXT_R$ duration at ATU-R, correlate with the expected contents over the same subset. The correlation method, the selected subset of tones, and the threshold for declaring these defect conditions are implementation discretionary.

C.6.1.2 ADSL line related far-end defects (supplements 9.3.1.4)

Loss-of-signal is further defined:

- *Loss-of-signal (LOS)*: The ADSL power shall be measured only in the $FEXT_C$ duration at ATU-C, or only in the $FEXT_R$ duration at ATU-R.

C.6.2 Test Parameters (supplements 9.5)

C.6.2.1 Near-end test parameters (supplements 9.5.1)

The near-end primitives are further defined:

- *Attenuation (ATN)*: The received signal power shall be measured only in the $FEXT_C$ duration at ATU-C, or only in the $FEXT_R$ duration at ATU-R.
- *Signal-to-Noise ratio (SNR) margin*: During FEXT Bitmap mode, this primitive represents the snr margin in the $FEXT_C$ duration at ATU-C, or in the $FEXT_R$ duration at ATU-R.

C.6.2.2 Far-end test parameters (supplements 9.5.2)

The far-end primitives are further defined:

- *Attenuation (ATN)*: The received signal power shall be measured only in the $FEXT_C$ duration at ATU-C, or only in the $FEXT_R$ duration at ATU-R.
- *Signal-to-Noise ratio SNR margin*: During FEXT Bitmap mode, this primitive represents the snr margin in the $FEXT_C$ duration at ATU-C, or in the $FEXT_R$ duration at ATU-R.

C.7 Initialization

C.7.1 Initialization with Hyperframe (replaces 10.1.5)

The exchange of messages between ATU-C and ATU-R should be performed in $FEXT_C$ and

IPR2025-00395
Petitioners' Exhibit 1011
Page 188 of 256

$FEXT_R$. The DMT symbol has two symbol rates: one is 4.3125 kbaud for the symbol without a cyclic prefix, and the other is $4 \times 69/68$ kbaud for the symbol with a cyclic prefix. 32 times of the TTR has the same period as 345 times of the 4.3125 kbaud, and 34 times of the TTR is the same as 345 times of $4 \times 69/68$ kHz.

During FEXT Bitmap mode, the ATU-R shall not transmit any signal during the $NEXT_C$ symbols duration and the ATU-C shall transmit only the pilot tone as the $NEXT_R$ signal except:

- C-PILOT1 (C-PILOT1A) which is accompanied by A_{48} signal (see C.7.4.1);
- C-QUIETn where no signal is transmitted.

The ATU-C begins transmitting C-PILOT1 at the beginning of the hyperframe without cyclic prefix. The ATU-C informs the phase of the TTR_C to ATU-R during C-PILOT1. The ATU-R begins transmitting R-REVERB1 at the beginning of the hyperframe without cyclic prefix. The ATU-R performs the training of any receiver equalizer using this phase information of the TTR_R generated from received TTR_C.

From C-PILOT1 to C-SEGUE1, the following numerical formula gives the information which duration N_{dmt}-th DMT symbol belongs to at ATU-R (see Figure C.15).

For $N_{dmt} = 0, 1, \ldots 344$

$S = 256 \times N_{dmt} \bmod 2760$

if { $(S + 255 < a)$ or $(S > a + b)$ } then $FEXT_R$ symbols

else then $NEXT_R$ symbols

where a = 1243, b = 1461

In order to enter C-RATES1 at the beginning of the hyperframe with cyclic prefix, the number of symbols from C-PILOT1 to C-SEGUE1 shall be a multiple of 345 DMT symbols.

From R-REVERB1 to R-SEGUE1, the following numerical formula gives the information which duration N_{dmt}-th symbol belongs to at ATU-C (see Figure C.16).

For $N_{dmt} = 0, 1, \ldots, 344$,

$S = 256 \times N_{dmt} \bmod 2760$

if { $(S > a)$ and $(S + 255 < a + b)$ } then $FEXT_C$ symbols

else then $NEXT_C$ symbols

where a = 1315, b = 1293

From C-RATES1 to C-SEGUE3, the number of symbols is a multiple of 345 DMT symbols. The following numerical formula gives the information which duration N_{dmt}-th DMT symbol belongs to. ATU-C transmits the message data in $FEXT_R$ symbols (see Figure C.11).

For $N_{dmt} = 0, 1, \ldots, 344$

$S = 272 \times N_{dmt} \bmod 2760$

if { $(S + 271 \geq a)$ and $(S \leq a + b)$ } then $NEXT_R$ symbols

else then $FEXT_R$ symbols

where a = 1243, b = 1461

The ATU-R enters R-REVERB3 at the beginning of the hyperframe with cyclic prefix, which is extracted from received signal. From R-REVERB3 to R-SEGUE5, the number of symbols is a multiple of 345 DMT symbols. The following numerical formula gives the information which duration N_{dmt}-th DMT symbol belongs to. ATU-R transmits the message data in $FEXT_C$ symbols

IPR2025-00395
Petitioners' Exhibit 1011
Page 189 of 256

(see Figure C.14).

For N_{dmt} = 0, 1, ..., 344

$S = 272 \times N_{dmt} \bmod 2760$

if { (S > a) and (S + 271 < a + b) } then $FEXT_C$ symbols

else then $NEXT_C$ symbols

where a = 1315, b = 1293

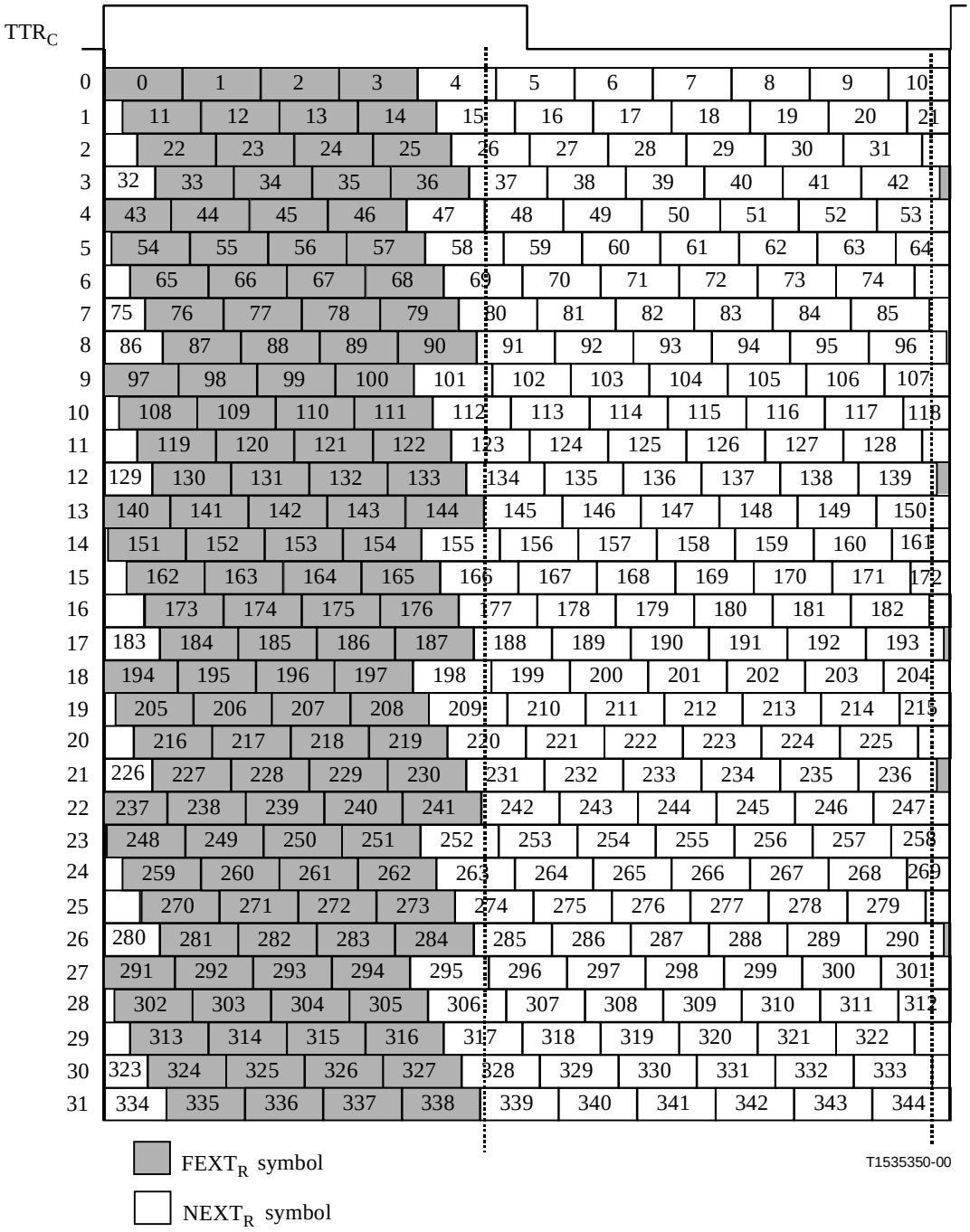

Figure C.15/G.992.1 – Symbol pattern in a hyperframe without cyclic prefix – Downstream

IPR2025-00395
Petitioners' Exhibit 1011
Page 190 of 256

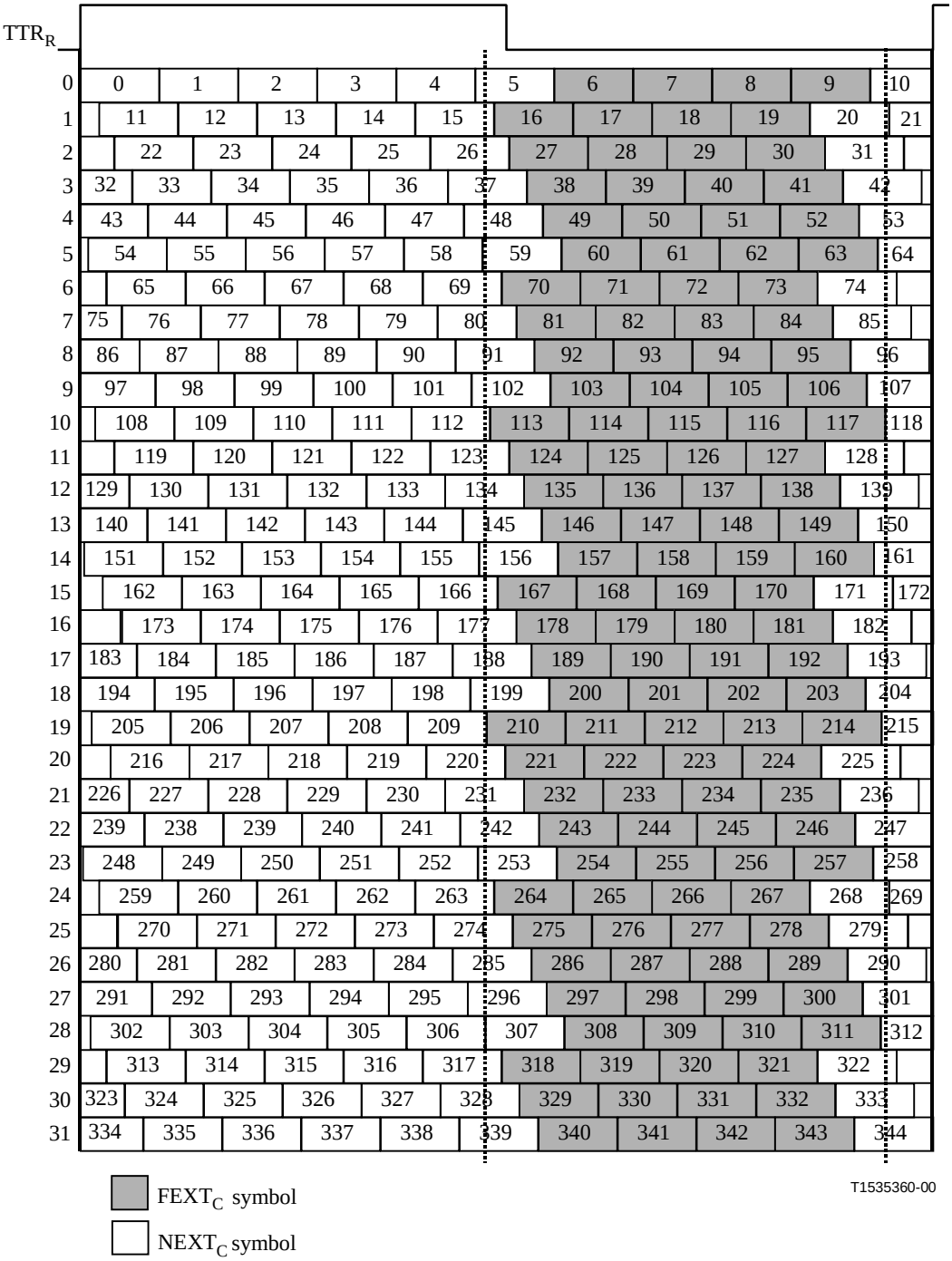

Figure C.16/G.992.1 – Symbol pattern in a hyperframe without cyclic prefix – Upstream

IPR2025-00395
Petitioners' Exhibit 1011
Page 191 of 256

C.7.2 Handshake – ATU-C (supplements 10.2)

C.7.2.1 CL messages (supplements 10.2.1)

See Table C.3.

Table C.3/G.992.1 – ATU-C CL message NPar(2) bit definitions for Annex C

NPar(2) bit	Definition
DBM	If set to ZERO, this bit shall indicate Bitmap-N_R and Bitmap-N_C are enabled (Dual Bitmap mode) and are used to transmit data. If set to ONE, this bit shall indicate Bitmap-N_R and Bitmap-N_C are disabled (FEXT Bitmap mode), i.e. only Bitmap-F_R and Bitmap-F_C are used to transmit data by ATU-C and ATU-R respectively. This mode selection shall be only performed by the ATU-C. If it is set to ONE in a CL message, it must be set to ONE in subsequent MS messages from either the ATU-C or ATU-R (only applicable for G.992.1 Annex C).

C.7.2.2 MS messages (supplements 10.2.2)

See Table C.4.

Table C.4/G.992.1 – ATU-C MS message NPar(2) bit definitions for Annex C

NPar(2) bit	Definition
DBM	If set to ZERO, this bit shall indicate Bitmap-N_R and Bitmap-N_C are enabled (Dual Bitmap mode) and are used to transmit data. If set to ONE, this bit shall indicate Bitmap-N_R and Bitmap-N_C are disabled (FEXT Bitmap mode), i.e. only Bitmap-F_R and Bitmap-F_C are used to transmit data by ATU-C and ATU-R respectively. This mode selection shall be only performed by ATU-C. This bit shall be set to ONE if it was set to ONE in a previous CL message (only applicable for G.992.1 Annex C).

C.7.3 Handshake – ATU-R (supplements 10.3)

C.7.3.1 CLR messages (supplements 10.3.1)

See Table C.5.

Table C.5/G.992.1 – ATU-R CLR message NPar(2) bit definitions for Annex C

NPar(2) bit	Definition
DBM	This bit shall be set to ONE.

IPR2025-00395
Petitioners' Exhibit 1011
Page 192 of 256

C.7.3.2 MS messages (supplements 10.3.2)

Table C.6.

Table C.6/G.992.1 – ATU-R MS message NPar(2) bit definitions for Annex C

NPar(2) bit	Definition
DBM	If set to ZERO, this bit shall indicate Bitmap-N_R and Bitmap-N_C are enabled (Dual Bitmap mode) and are used to transmit data. If set to ONE, this bit shall indicate Bitmap-N_R and Bitmap-N_C are disabled (FEXT Bitmap mode), i.e. only Bitmap-F_R and Bitmap-F_C are used to transmit data by ATU-C and ATU-R respectively. This mode selection shall be only performed by ATU-C. This bit shall be set to ONE if it was set to ONE in a previous CL message (only applicable for G.992.1 Annex C).

C.7.4 Transceiver Training – ATU-C (supplements 10.4)

During transceiver training from C-REVERB1 to C-SEGUE1 except C-PILOTn and C-QUIETn, the ATU-C shall transmit both $FEXT_R$ and $NEXT_R$ symbols when Bitmap-N_R is enabled (Dual Bitmap mode), and shall not transmit the $NEXT_R$ symbols except pilot tone when Bitmap-N_R is disabled (FEXT Bitmap mode). The duration of each state is defined as Figure C.21.

C.7.4.1 C-PILOT1 (supplements 10.4.2)

The ATU-C shall start the N_{SWF} (sliding window frame) counter from 0 immediately after entering C-PILOT1, and increment the N_{SWF} counter modulo 345 after transmission of each DMT symbol. According to the sliding window function and this counter, the ATU-C decides to transmit all of the subsequent symbols in either $FEXT_R$ or $NEXT_R$ symbols (for example, see Figures C.11, C.15 and C.19).

C-PILOT1 has two subcarriers.

The first carrier is the pilot tone as a single frequency sinusoid $f_{\text{C-PILOT1}}$ = 276 kHz ($n_{\text{C-PILOT1}}$ = 64) (see 10.4.2).

The second carrier (A_{48}) is used to transmit $NEXT_R$/$FEXT_R$ information. The ATU-R can detect the phase information of the TTR_C from the A_{48} signal. The constellation encoding of the 48th carrier with 2-bit constellation shall be as follows:

(+ , +): indicates a $FEXT_R$ symbol;

(+ , –): indicates a $NEXT_R$ symbol.

C.7.4.2 C-PILOT1A (supplements 10.4.3)

C-PILOT1A has two subcarriers and it is the same transmitted signal as C-PILOT1 (C.7.4.1).

C.7.4.3 C-REVERB3 (supplements 10.4.11)

In order to synchronize the first symbol of C-RATES1 with the beginning of the hyperframe and to inform the entering timing of C-RATES1 to the ATU-R, the first symbol of C-SEGUE1 shall be transmitted inside of the $FEXT_R$ duration as shown in Figure C.17. Therefore, the duration of C-REVERB3 is 3628 DMT symbols.

IPR2025-00395
Petitioners' Exhibit 1011
Page 193 of 256

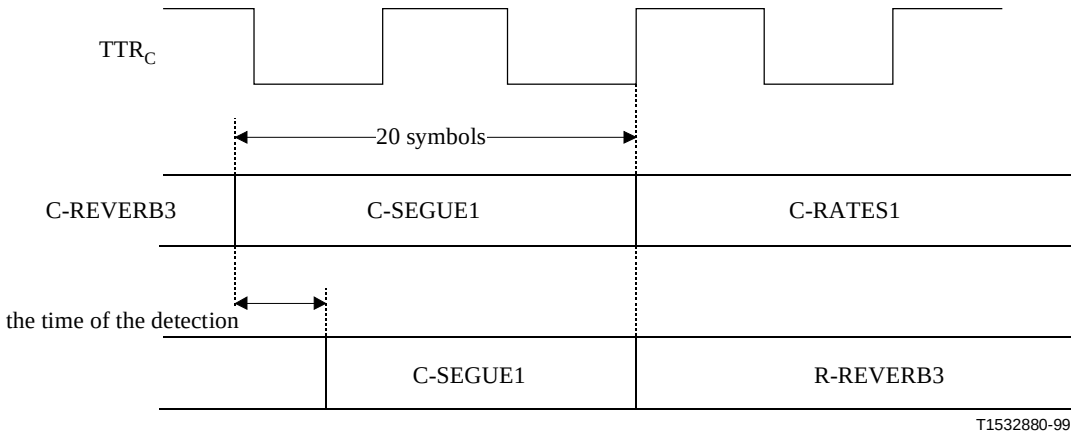

Figure C.17/G.992.1 – Timing diagram from C-SEGUE1 to C-RATES1

C.7.5 Transceiver Training – ATU-R (supplements 10.5)

During transceiver training from R-REVERB1 to R-SEGUE1 except R-QUIETn, the ATU-R shall transmit both $FEXT_C$ and $NEXT_C$ symbols when Bitmap-N_C is enabled (Dual Bitmap mode) and shall not transmit $NEXT_C$ symbols when Bitmap-N_C is disabled (FEXT Bitmap mode). The duration of each state is defined as Figure C.21.

C.7.5.1 R-QUIET2 (supplements 10.5.1)

The ATU-R enters R-REVERB1 after it completes timing recovery and Hyperframe synchronization from C-PILOT1/C-PILOT1A.

C.7.5.2 R-REVERB1 (supplements 10.5.2)

The data pattern used in R-REVERB1 is the pseudo-random upstream sequence PRU defined in 8.11.3 and repeated here for convenience:

$$\begin{cases} d_n = 1 & \text{for } n = 1 \text{ to } 6 \\ d_n = d_{n-5} \oplus d_{n-6} & \text{for } n = 7 \text{ to } 64 \end{cases} \qquad \text{(C.10-1)}$$

The ATU-R shall start its N_{SWF} counter immediately after entering R-REVERB1, and then increment the N_{SWF} counter with modulo 345 from 0 when it transmits each DMT symbol. The ATU-C and ATU-R shall have the same value since hyperframe alignment between the ATU-C and ATU-R shall be maintained. According to the sliding window and this counter, the ATU-R decides to transmit all of the subsequent symbols in either the $FEXT_C$ or the $NEXT_C$ symbol.

C.7.5.3 R-QUIET3 (replaces 10.5.3)

The final symbol of R-QUIET3 accommodates the frame alignment of the transmitter to that of the receiver. It may be shortened by any number of samples. The maximum duration of R-QUIET3 is 6145 DMT symbols.

C.7.5.4 R-REVERB2 (supplements 10.5.5)

After ATU-R detects C-SEGUE1, the ATU-R enters R-SEGUE1. The maximum duration of R-REVERB2 is 3643 DMT symbols.

IPR2025-00395
Petitioners' Exhibit 1011
Page 194 of 256

C.7.6 Channel analysis (ATU-C) (supplements 10.6)

ATU-C shall transmit only $FEXT_R$ symbols, and shall not transmit the $NEXT_R$ symbols except the pilot tone from C-RATES1 to C-CRC2. During C-MEDLEY, the ATU-C shall transmit both $FEXT_R$ and $NEXT_R$ symbols when Bitmap-N_R is enabled (Dual Bitmap mode). The ATU-C shall not transmit $NEXT_R$ symbols except the pilot tone, when Bitmap-N_R is disabled (FEXT Bitmap mode). The duration of each state is defined in Figure C.21.

C.7.6.1 C-SEGUE1 (supplements 10.6.1)

The duration of C-SEGUE1 is 20 symbols in order that the first symbol of C-SEGUE1 shall be inside of the $FEXT_R$ duration.

C.7.6.2 C-MEDLEY (supplements 10.6.6)

Basically, the definition of C-MEDLEY is the same as 10.6.6, except for the duration of the SNR estimation at ATU-R for the downstream. With the periodical noise of TCM-ISDN, SNR also changes in the same cycle, as shown in Figure C.18. The ATU-C transmits the signal in both of $NEXT_R$ and $FEXT_R$ symbols, and the ATU-R estimates two SNRs from the received $NEXT_R$ and $FEXT_R$ symbols, respectively, as defined in Figure C.19.

The following formula gives the information that received N_{dmt}-th DMT symbol belongs to:

For $N_{dmt} = 0, 1, \ldots, 344$

$S = 272 \times N_{dmt} \bmod 2760$

if { (S + 271 < a) or (S > d) } then symbol for estimation of $FEXT_R$ SNR

if { (S > b) and (S + 271 < c) } then symbol for estimation of $NEXT_R$ SNR

where a = 1243, b = 1403, c = 2613, d = 2704

When Bitmap-N_R is disabled (FEXT Bitmap mode), ATU-C shall transmit only the pilot tone as $NEXT_R$ symbol. The number of bits of $NEXT_R$ shall be no more than the number of bits of $FEXT_R$.

IPR2025-00395
Petitioners' Exhibit 1011
Page 195 of 256

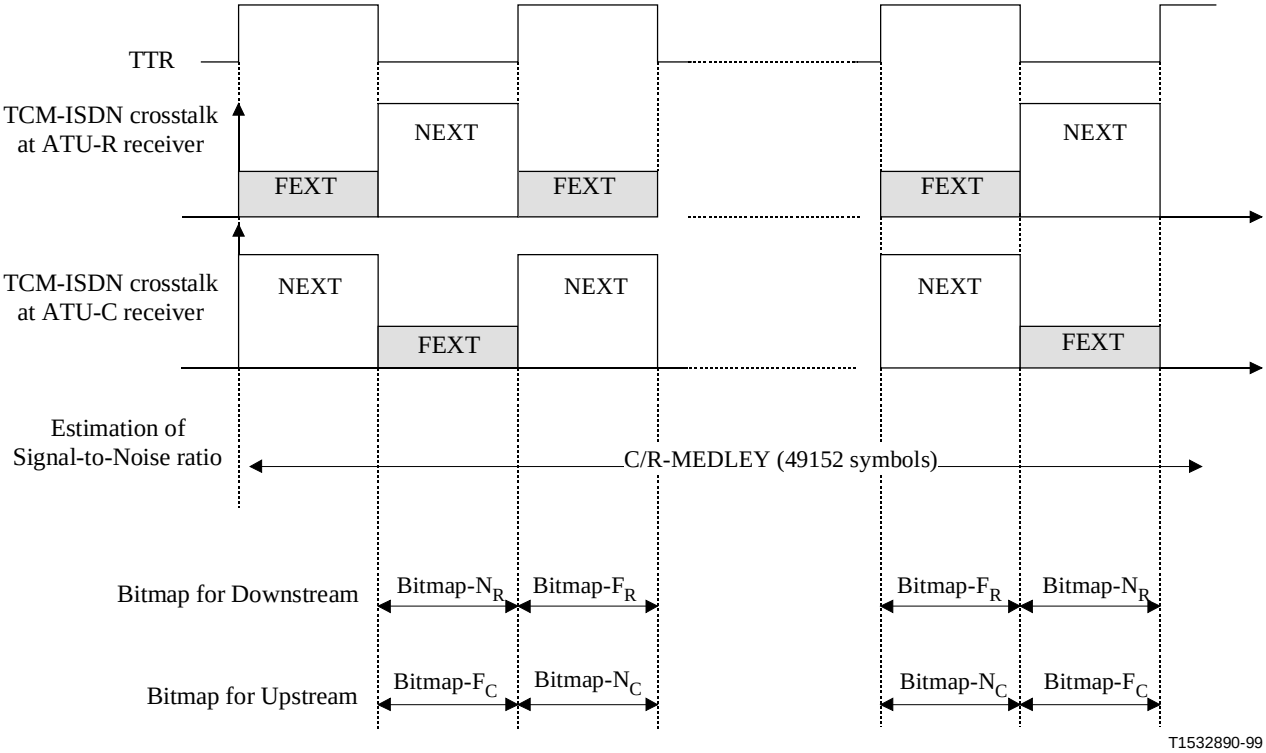

Figure C.18/G.992.1 – Estimation of periodic Signal-to-Noise Ratio

IPR2025-00395
Petitioners' Exhibit 1011
Page 196 of 256

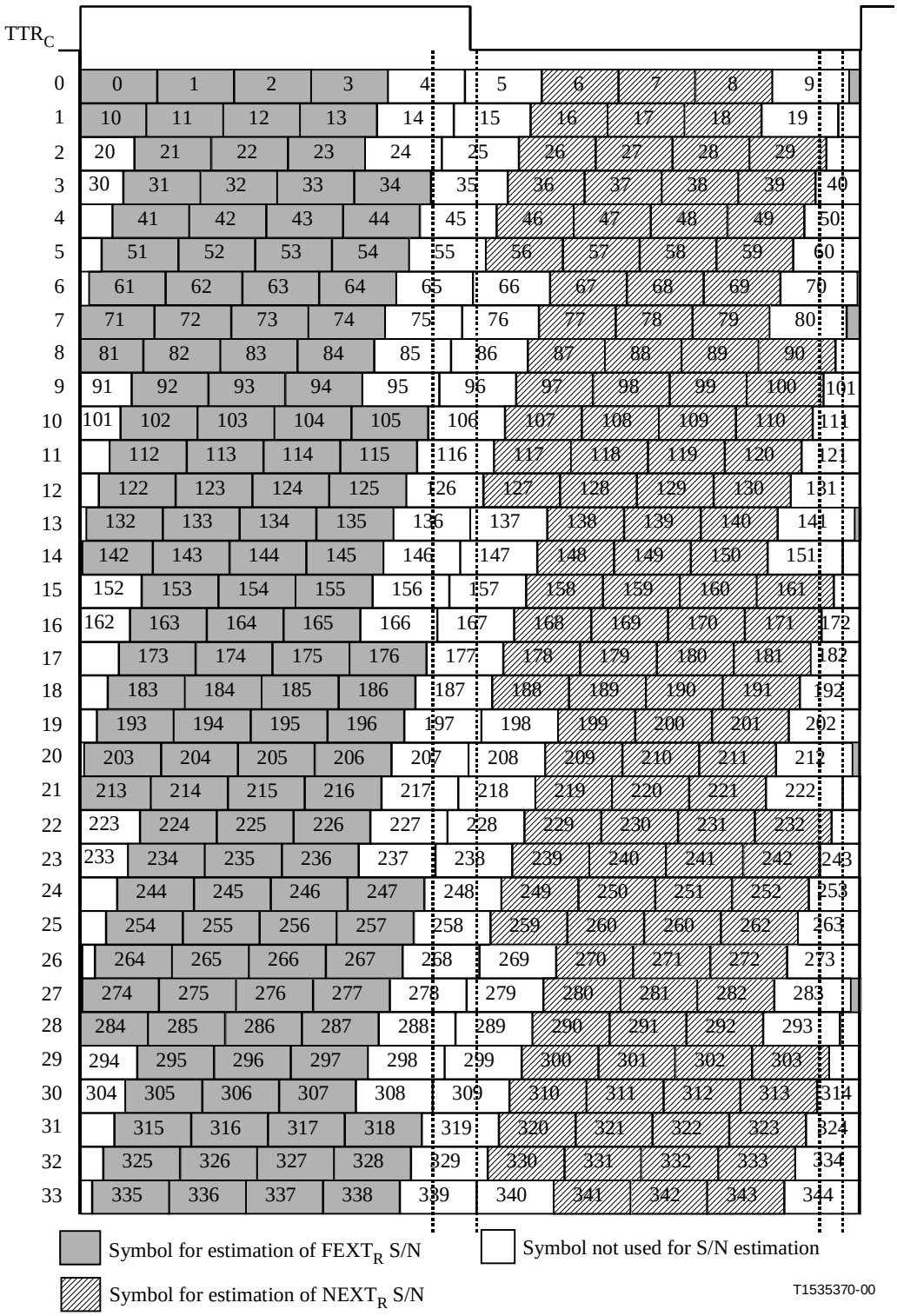

Figure C.19/G.992.1 – Symbol pattern in a hyperframe for S/N estimation – Downstream

C.7.7 Channel analysis (ATU-R) (supplements 10.7)

From R-RATES1 to R-CRC2, the ATU-R shall transmit only the $FEXT_C$ symbols and shall not transmit the $NEXT_C$ symbols. In R-SEGUE2 and R-MEDLEY, the ATU-R shall transmit both $FEXT_C$ and $NEXT_C$ symbols when Bitmap-N_C is enabled (Dual Bitmap mode) and shall not transmit $NEXT_C$ symbols when Bitmap-N_C is disabled (FEXT Bitmap mode). The duration of each state is defined in Figure C.21.

IPR2025-00395
Petitioners' Exhibit 1011
Page 197 of 256

C.7.8 R-SEGUE1 (supplements 10.7.1)

The maximum duration of R-SEGUE1 is 14 symbols (see Figure C.17).

C.7.8.1 R-REVERB3 (supplements 10.7.2)

The ATU-R shall start R-REVERB3 aligned with the beginning of a Hyperframe.

C.7.8.2 R-SEGUE2 (supplements 10.7.3)

The duration of R-SEGUE2 is 13 symbols.

C.7.8.3 R-MEDLEY (supplements 10.7.8)

Basically, the definition of R-MEDLEY is the same as 10.7.8, except for the duration of the SNR estimation at ATU-C for the upstream. With the periodical noise of TCM-ISDN, SNR also changes in the same cycle, as shown in Figure C.18. ATU-R shall transmit the signal in both of $NEXT_C$ and $FEXT_C$ symbols, and ATU-C shall estimate two SNRs from the received $NEXT_C$ and $FEXT_C$ symbols, respectively, as defined in Figure C.20.

The following numerical formula gives the information that received N_{dmt}-th DMT symbol belongs to:

For $N_{dmt} = 0, 1, \ldots, 344$

$S = 272 \times N_{dmt} \bmod 2760$

if { (S > b) and (S + 271 < c) } then symbol for estimation of $FEXT_C$ SNR

if { (S + 271 < a) } then symbol for estimation of $NEXT_C$ SNR

where a = 1148, b = 1315, c = 2608

When Bitmap-N_C is disabled (FEXT Bitmap mode), the ATU-R shall not transmit $NEXT_C$ symbol. The number of bits of $NEXT_C$ shall be no more than the number of bits of $FEXT_C$.

IPR2025-00395
Petitioners' Exhibit 1011
Page 198 of 256

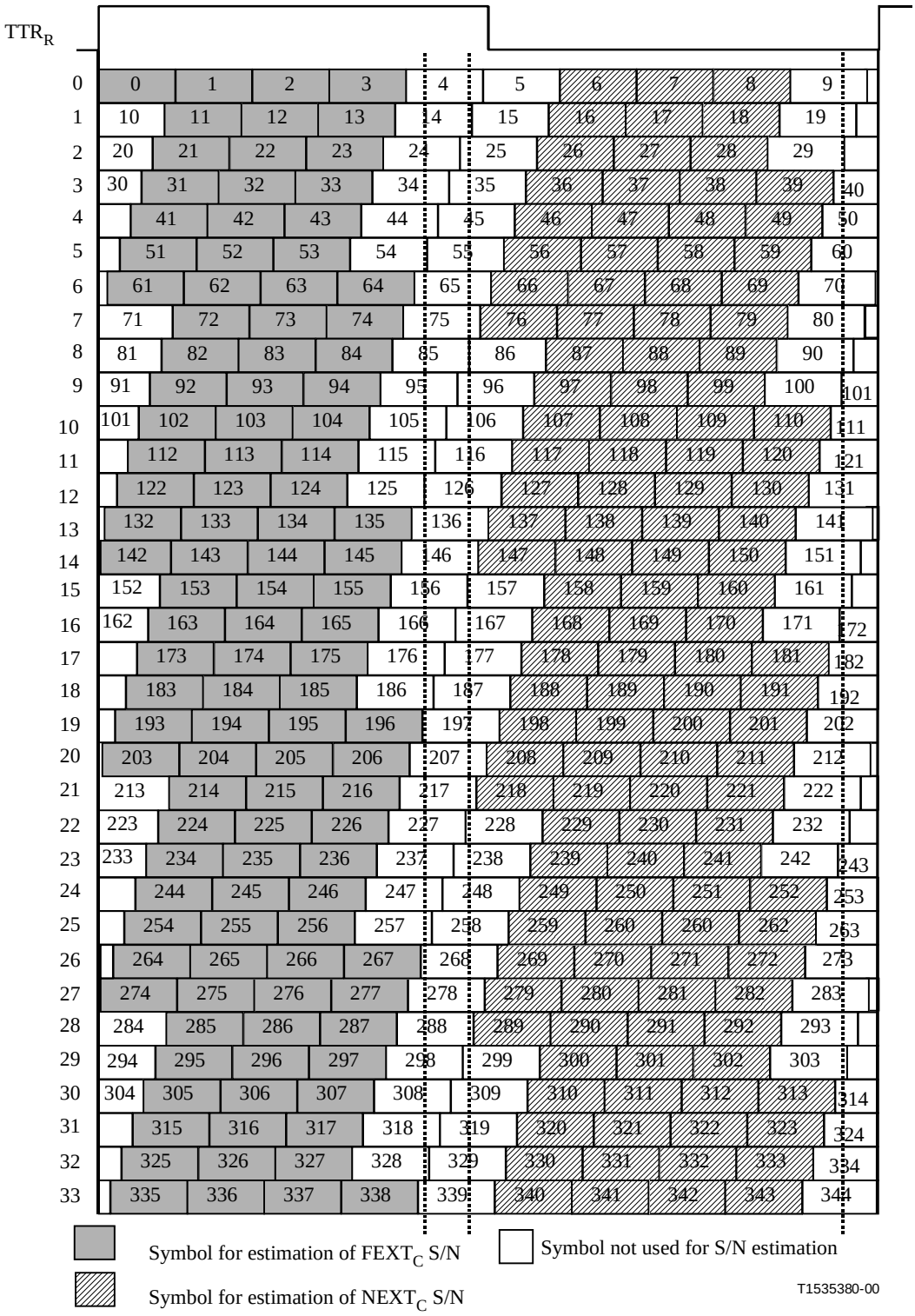

Figure C.20/G.992.1 – Symbol pattern in a hyperframe for S/N estimation – Upstream

C.7.9 Exchange – ATU-C (supplements 10.8)

During C-RATESn, C-MSGn, C-B&G, and C-CRCn, the ATU-C shall transmit the FEXT$_R$ symbol. In the other signals, the ATU-C shall transmit both FEXT$_R$ and NEXT$_R$ symbols when Bitmap-N$_R$ is enabled (Dual Bitmap mode), and shall not transmit the NEXT$_R$ symbols except pilot tone when Bitmap-N$_R$ is disabled (FEXT Bitmap mode). The duration of each state is defined in Figure C.22.

IPR2025-00395
Petitioners' Exhibit 1011
Page 199 of 256

C.7.9.1 C-MSG2 (supplements 10.8.9)

$n_{1C\text{-}MSG2} = 43$

$n_{2C\text{-}MSG2} = 91$

C.7.9.1.1 Total number of bits per symbol supported (supplements 10.8.9.3)

The maximum number of bits per symbol is defined at the reference point B, that is calculated from the $FEXT_C$ and $NEXT_C$ downstream channel performance (e.g. if the maximum numbers of bits that can be supported in $FEXT_C$ and $NEXT_C$ symbols are 111 and 88 {Total number of bits per symbol supported} = $(111 \times 126 + 88 \times 214)/340 = 96$).

NOTE – The number of symbols per hyperframe is 340. The number of FEXT symbols is 126. The number of NEXT symbols is 214.

C.7.9.2 C-B&G (replaces 10.8.13)

C-B&G shall be used to transmit to the ATU-R the bits and gains information, Bitmap-F_C $\{b_1, g_1, b_2, g_2, \ldots b_{31}, g_{31}\}$, and Bitmap-$N_C$ $\{b_{33}, g_{33}, b_{34}, g_{34}, \ldots, b_{63}, g_{63}\}$, that are to be used on the upstream carriers. b_i of Bitmap-F_C indicates the number of bits to be coded by ATU-R transmitter onto the i th upstream carrier in $FEXT_C$ symbols; g_i of Bitmap-F_C indicates the scale factor, relative to the gain that was used for that carrier during the transmission of R-MEDLEY, that shall be applied to the i th upstream carrier in $FEXT_C$ symbols. Similarly, b_i of Bitmap-N_C indicates the number of bits onto the $(i – 32)$ th upstream carrier in $NEXT_C$ symbols; g_i of Bitmap-N_C indicates the scale factor that shall be applied to the $(i – 32)$ th upstream carrier in $NEXT_C$ symbols.

Because no bits or energy will be transmitted at DC or one-half the sampling rate, b_0, g_0, b_{32}, g_{32}, b_{64}, and g_{64} are all presumed to be zero and shall not be transmitted.

The C-B&G information shall be mapped in a 992-bit (124 byte) message m defined by:

$$m = \{m_{991}, m_{990}, \ldots, m_1, m_0\} = \{ g_{63}, b_{63}, \ldots, g_{33}, b_{33}, g_{31}, b_{31}, \ldots, g_1, b_1\}, \qquad \text{(C.10-2)}$$

with the MSB of b_i and g_i in the higher m index and m_0 being transmitted first. The message m shall be transmitted in 124 symbols, using the transmission method as described in 10.8.9.

When Bitmap-N_C is disabled (FEXT Bitmap mode), b_i and g_i of Bitmap-N_C shall be set to zero.

C.7.9.3 C-SEGUE3 (replaces 10.8.16)

The duration of C-SEGUE3 is 18 symbols. Following C-SEGUE3, the ATU-C completes the initialization and enters C-SHOWTIME. In C-SHOWTIME, ATU-C shall transmit the signal using Bitmap-F_R and Bitmap-N_R with the sliding window.

When Bitmap-N_R is disabled (FEXT Bitmap mode), ATU-C shall transmit only the pilot tone as $NEXT_R$ symbols.

C.7.10 Exchange – ATU-R (supplements 10.9)

ATU-R shall transmit only the $FEXT_C$ symbols in R-MSGn, R-RATESn, R-B&G, R-CRCn. In other signals, the ATU-R shall transmit both $FEXT_C$ and $NEXT_C$ symbols when Bitmap-N_C is enabled (Dual Bitmap mode) and shall not transmit $NEXT_C$ symbols when Bitmap-N_C is disabled (FEXT Bitmap mode). The duration of each state is defined in Figure C.22.

C.7.10.1 R-MSG-RA (supplements 10.9.2)

Replace Table 10-15 with Table C.7.

IPR2025-00395
Petitioners' Exhibit 1011
Page 200 of 256

Table C.7/G.992.1 – Assignment of 80 bits of R-MSG-RA (Annex C)

Suffix(ces) of m_i (Note)	Parameter All reserved bits shall be set to 0
79-68	Reserved for ITU-T
67-56	$B_{fast\text{-}max}$
55-49	Number of RS overhead bytes, (R)
48-40	Number of RS payload bytes, K
39-32	Number of tones carrying data (ncloaded)
31-25	Estimated average loop attenuation
24-21	Coding gain
20-16	Performance margin with selected rate option
15-14	Reserved for ITU-T
13-12	Maximum Interleave Depth
11-0	Total number of bits per DMT symbol, B_{max}
NOTE – Within the separate fields the least significant bits have the lowest subscripts.	

C.7.10.1.1 Total number of bits supported (B_{max}) (replaces 10.9.2.8)

This parameter shall be defined as in R-MSG2, see C.7.9.1.

C.7.10.1.2 $B_{fast\text{-}max}$ (new)

$B_{fast\text{-}max}$ is the maximum number of bits of the fast buffer for fast data transmitted on the condition that the bits of the fast data can be equally assigned to all FEXT-symbols and NEXT-symbols.

Fast Buffered Data $B_{fast\text{-}max}$ is t_f.

C.7.10.2 R-MSG2 (supplements 10.9.8)

$N_{1R\text{-}MSG2} = 10$

$N_{2R\text{-}MSG2} = 20$

C.7.10.2.1 Total number of bits per symbol supported (supplements 10.9.8.3)

The maximum number of bits per symbol is defined at the reference point B, that is calculated from the $FEXT_R$ and $NEXT_R$ downstream channel performance. For example, if the maximum numbers of bits that can be supported in $FEXT_R$ and $NEXT_R$ symbols are 111 and 88, the total number of bits per symbol supported is $(111 \times 126 + 88 \times 214)/340 = 96$.

NOTE – The number of symbols per hyperframe is 340, the number of FEXT symbols is 126, and the number of NEXT symbols is 214.

C.7.10.3 R-B&G (replaces 10.9.14)

The purpose of R-B&G is to transmit to ATU-C the bits and gains information, Bitmap-F_R $\{b_1, g_1, b_2, g_2, ..., b_{255}, g_{255}\}$, and Bitmap-$N_R$ $\{b_{257}, g_{257}, b_{258}, g_{258}, ..., b_{511}, g_{511}\}$, to be used on the downstream subcarriers. b_i of Bitmap-F_R indicates the number of bits to be coded by ATU-C transmitter onto the i th downstream subcarrier in $FEXT_R$ symbols; g_i of Bitmap-F_R indicates the scale factor that shall be applied to the i th downstream subcarrier in $FEXT_R$ symbols, relative to the gain that was used for that carrier during the transmission of C-MEDLEY. Similarly, b_i of Bitmap-N_R indicates the number of bits onto the $(i – 256)$ th downstream carrier in $NEXT_R$ symbols; g_i of

IPR2025-00395
Petitioners' Exhibit 1011
Page 201 of 256

Bitmap-N_R indicates the scale factor that shall be applied to the (i – 256) th downstream carrier in $NEXT_R$ symbols. Because no bits or energy will be transmitted at DC or one-half the sampling rate, b_0, g_0, b_{256}, g_{256}, b_{512}, and g_{512} are all presumed to be zero, and are not transmitted. Because subcarrier 64 is reserved as the pilot tone, b_{64} and b_{320}, shall be set to 0, g_{64} and g_{320} shall be set to g_{sync}. The value g_{sync} represents the gain scaling applied to the sync symbol.

The R-B&G information shall be mapped in a 8160-bit (1020 byte) message m defined by:

$$m = \{m_{8159}, m_{8158}, \ldots, m_1, m_0\} = \{ g_{511}, b_{511}, \ldots, g_{257}, b_{257}, g_{255}, b_{255}, \ldots, g_1, b_1\}, \qquad \text{(C.10-3)}$$

with the MSB of b_i and g_i in the higher m index and m_0 being transmitted first. The message m shall be transmitted in 1020 symbols, using the transmission method as described in 10.9.8.

When Bitmap-N_R is disabled (FEXT Bitmap mode), b_i and g_i of Bitmap-N_R shall be set to zero.

C.7.10.4 R-SEGUE5 (replaces 10.9.17)

The duration of R-SEGUE5 is 13 symbols. Following R-SEGUE-5, ATU-R completes the initialization and enters R-SHOWTIME. In R-SHOWTIME, ATU-R shall transmit the signal using Bitmap-F_C and Bitmap-N_C with the sliding window.

When Bitmap-N_C is disabled (FEXT Bitmap mode), ATU-R shall not transmit $NEXT_C$ symbols.

IPR2025-00395
Petitioners' Exhibit 1011
Page 202 of 256

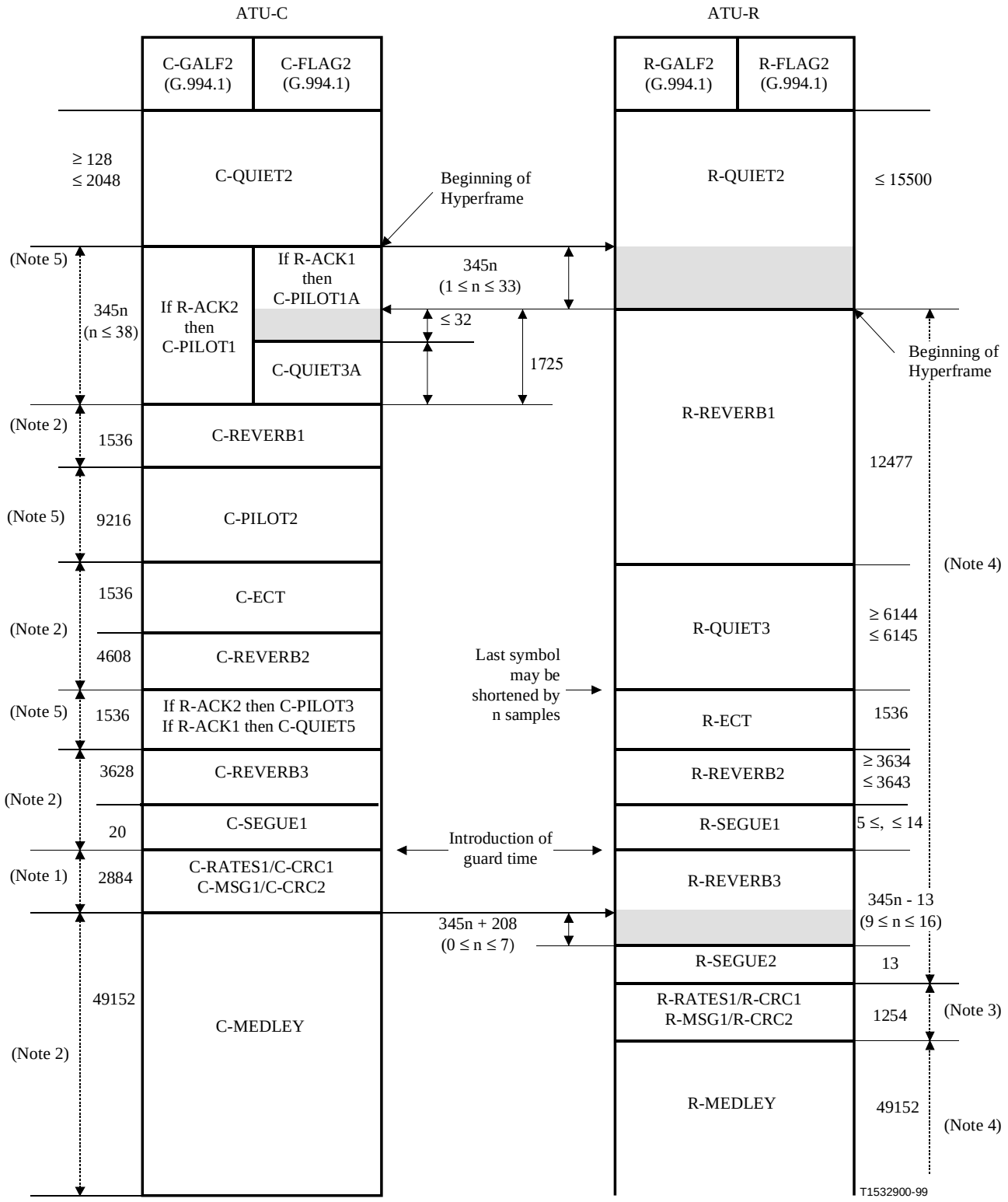

Figure C.21/G.992.1 – Timing diagram of the initialization sequence – Part 1

IPR2025-00395
Petitioners' Exhibit 1011
Page 203 of 256

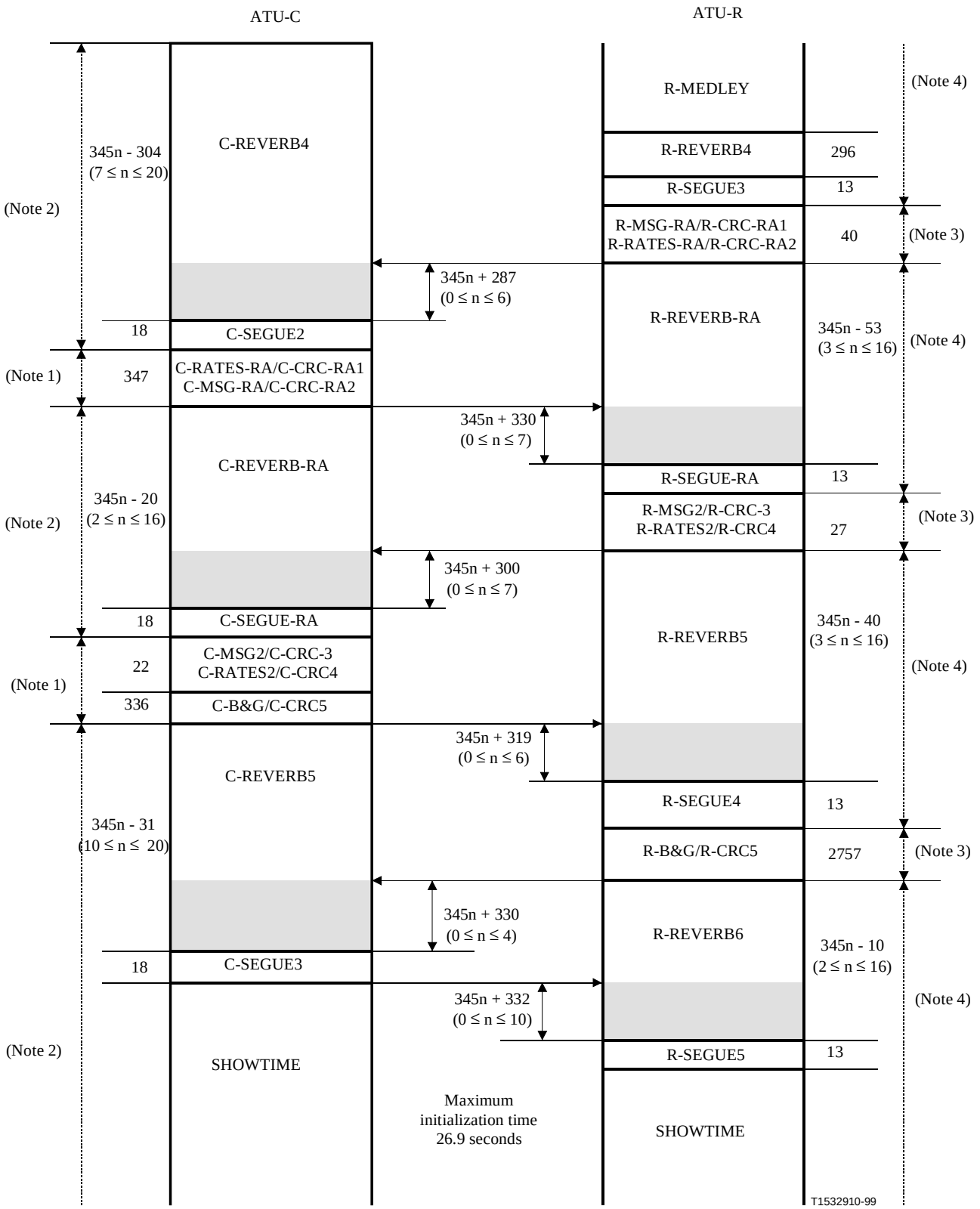

NOTE 1 – The ATU-C shall transmit the $FEXT_R$ symbols, and shall not transmit as $NEXT_R$ symbols except the pilot tone.

NOTE 2 – The ATU-C shall transmit both $FEXT_R$ and $NEXT_R$ symbols, when Bitmap-N_R is enabled (Dual Bitmap mode). ATU-C shall not transmit the $NEXT_R$ symbols except pilot tone, when Bitmap-N_R is disabled (FEXT Bitmap mode).

NOTE 3 – The ATU-R shall transmit the $FEXT_C$ symbols, and shall not transmit the $NEXT_C$ symbols.

NOTE 4 – The ATU-R shall transmit both $FEXT_C$ symbols, when Bitmap-N_C is enabled (Dual Bitmap mode). ATU-R shall not transmit $NEXT_C$ symbols, when Bitmap-N_C is disabled (FEXT Bitmap mode).

NOTE 5 – The ATU-C shall transmit both $FEXT_R$ and $NEXT_R$ symbols.

Figure C.22/G.992.1 – Timing diagram of the initialization sequence – Part 2

IPR2025-00395
Petitioners' Exhibit 1011
Page 204 of 256

C.8 AOC On-line adaptation and reconfiguration (pertains to clause 11)

C.8.1.1 Bit swap request (replaces 11.2.3)

The receiver shall initiate a bit swap by sending a bit swap request to the transmitter via the AOC channel. This request tells the transmitter which subcarriers are to be modified. The format of the request is shown in Table C.8.

Table C.8/G.992.1 – Format of the bit swap request message

Message header	Message field 1-4		
$\{11111111_2\}$ (8 bits)	Bitmap index (1 bit)	Command (7 bits)	Subchannel index (8 bits)

The request shall comprise nine bytes as follows:

- an AOC message header consisting of 8 binary ones;
- message fields 1-4, each of which consists of one-bit bitmap index, a seven-bit command followed by a related eight-bit subchannel index. One-bit bitmap index and valid seven-bit commands for the bit swap message shall be as shown in Table C.9. In Table C.9, the MSB for the bit swap request command represents the Bitmap index. For downstream data, Bitmap index equals 0 indicates Bitmap-F_R, and Bitmap index equals 1 indicates Bitmap-N_R. Similarly for upstream data, Bitmap index equals 0 indicates Bitmap-F_C, and 1 indicates Bitmap-N_C. The eight-bit subchannel index is counted from low to high frequencies with the lowest frequency subcarrier having the number zero. The subcarrier index zero shall not be used;
- the bit swap between $FEXT_{C/R}$ symbols and $NEXT_{C/R}$ symbols is not allowed.

Table C.9/G.992.1 – Bit swap request command

Value (8 bit)	Interpretation
$y0000000_2$	Do nothing
$y0000001_2$	Increase the number of allocated bits by one
$y0000010_2$	Decrease the number of allocated bits by one
$y0000011_2$	Increase the transmitted power by 1 dB
$y0000100_2$	Increase the transmitted power by 2 dB
$y0000101_2$	Increase the transmitted power by 3 dB
$y0000110_2$	Reduce the transmitted power by 1 dB
$y0000111_2$	Reduce the transmitted power by 2 dB
$y0001xxx_2$	Reserved for vendor discretionary commands
NOTE – y is "0" for $FEXT_{C/R}$ symbols, and "1" for $NEXT_{C/R}$ symbols of the Sliding Window.	

The bit swap request message (i.e. header and message fields) shall be transmitted five consecutive times.

IPR2025-00395
Petitioners' Exhibit 1011
Page 205 of 256

To avoid g_i divergence between ATU-C and ATU-R after several bit swaps, for a g_i update of Δ dB the new g_i value should be given by:

$$g_i' = (1/512) \times round(512 \times g_i \times 10 \exp(\Delta / 20)) \qquad \text{(C.11-1)}$$

C.8.1.2 Extended bit swap request (supplements 11.2.4)

The format of the extended bit swap request is shown in Table C.10.

Table C.10/G.992.1 – Format of the bit swap request message

Message header	Message field 1-6		
$\{11111100_2\}$ (8 bits)	Bitmap index (1 bit)	Command (7 bits)	Subchannel index (8 bits)

In the same manner as the bit swap request, each of the massage fields of the extended bit swap request consists of one-bit bitmap index, a seven-bit command followed by a related eight-bit subchannel index.

C.8.1.3 Bit swap acknowledge (supplements 11.2.5)

The bit swap superframe counter number shall only indicate the last superframe (SPF#4) of a hyperframe.

The new bit and/or transmit power table(s) shall then take effect starting from the first frame (frame 0) of SPF#0 of a hyperframe.

If the bit swap superframe counter number contained in the received bit swap acknowledge message does not indicate SPF#4, then the new table(s) shall take effect starting from frame 0 of SPF#0 of the next hyperframe.

ANNEX D

ATU-C and ATU-R state diagrams

D.1 Introduction

This annex provides state diagrams for the ATU-C and ATU-R, some portions of which are mandatory to guarantee interworking between different manufacturers' units, and some portions of which are presented here as an example only. Their functions may be required or desired, but the implementation is left to the vendor.

D.2 Definitions

The following terms and abbreviations are used in this annex. Where states or events have been defined elsewhere in this Recommendation, the definitions are referenced here for convenience.

D.2.1 LOF-rs: Loss of ADSL frame synch/resync event. This event occurs when some algorithm, which may be vendor-specific, determines that a resync attempt is required. Note that this LOF-rs event is probably (but not required to be) related to the SEF (severely errored frame) defect defined for operations and maintenance (see 9.3).

D.2.2 persistent LOF: Persistent LOF is declared after 2.5 ± 0.5 s of near-end LOF failure with SEF defect still present. LOF failure and SEF defect are defined for operations and maintenance in 9.3.

IPR2025-00395
Petitioners' Exhibit 1011
Page 206 of 256

D.2.3 persistent LOS: Persistent LOS is declared after 2.5 ± 0.5 s of near-end LOS failure with LOS defect still present. LOS failure and LOS defect are defined for operations and maintenance in 9.3.

D.2.4 high BER: High bit error rate in received data: detected by thresholding #CRC errors (near-end CRC-8i and CRC-8ni error anomalies, defined in 9.3) over some period of time.

D.2.5 host control channel: An ATU-C configuration control channel from some host controller, such as an ACOT (ADSL Central Office Terminal), which controls one or more ATU-C line units. Note that this channel has no relationship or direct interworking with the 64 or 16 kbit/s "C" bearer channel, which is sometimes also called a control channel.

D.2.6 reconfig1: A channelization reconfiguration that can be accomplished without resetting certain key portions of the data framing, transmitter, or receiver functions (6 and 7), and thus can be performed without disrupting channels that would not change as a result of the reconfiguration. For example, if four 1.536 Mbit/s simplex channels are currently active and are all allocated to the interleave data buffer, then a reconfiguration that requires two of them to remain active, and the other two to be replaced by a 3.088 Mbit/s channel would qualify as a reconfig1.

D.2.7 reconfig2: A channelization reconfiguration that requires resetting of some key portion of the data framing, transmitter, or receiver functions (6 and 7), and which thus cannot be achieved without loss of some user data. This reconfiguration request will require a fast retrain. Examples are:

– a change from the default bearer channel rates to optional rates, such as a request for a reconfiguration from a single 6.144 Mbit/s simplex bearer to a 6.312 Mbit/s simplex bearer, which requires a change in aggregate transmitted bit rate, FEC codeword size, and resetting the interleave/deinterleave functions;

– if four 1.536 Mbit/s simplex channels are currently active and are all allocated to the interleave data buffer, then a reconfiguration that requires one or more of them to move to the fast data buffer would require a fast retrain to allocate the extra AEX byte for the fast data buffer, to change the FEC codeword parameters of the interleaved data buffer, and to reset the interleave/deinterleave functions.

D.3 State Diagrams

State diagrams are given in Figure D.1 for the ATU-C, and in Figure D.2 for the ATU-R. States are indicated by ovals, with the name of the state given within the oval. The states are defined in Table D.1 for the ATU-C and in Table D.2 for the ATU-R. Transitions between states are indicated by arrows, with the event causing the transition listed next to the arrow. For some events, the source of the event is indicated with letter(s) and a colon preceding the event name; a key to the source events is provided at the bottom of each figure. All states except *Retrain* and *Resync* are mandatory.

In the state diagram for the ATU-C, a C-IDLE state would be desired to guarantee a quiet mode, which may be useful prior to provisioning, to allow certain tests (e.g. MLT), or to discontinue service. A selftest function is desirable, but it may be a vendor/customer option to define when selftest occurs (e.g. always at power-up or only under CO control), and which transition to take after successfully completing selftest [e.g. enter C-IDLE, or enter C-SILENT1 (see Recommendation G.994.1), or enter C-Activate/Init/Train].

A variety of "host controller" commands (events preceded by "c:") are shown as non-mandatory in the ATU-C state diagram to provide example events and transitions between states. The way in which these events are implemented is left to the vendor, since many options are possible (e.g. separate host controller port on the ATU-C, switches or other front-panel controls, fixed options).

IPR2025-00395
Petitioners' Exhibit 1011
Page 207 of 256

A *Retrain* state is shown as non-mandatory in both state diagrams (fast retrain is still under study). A *Resync* state is shown as non-mandatory in both state diagrams, to be left as a vendor option that may use vendor proprietary algorithms.

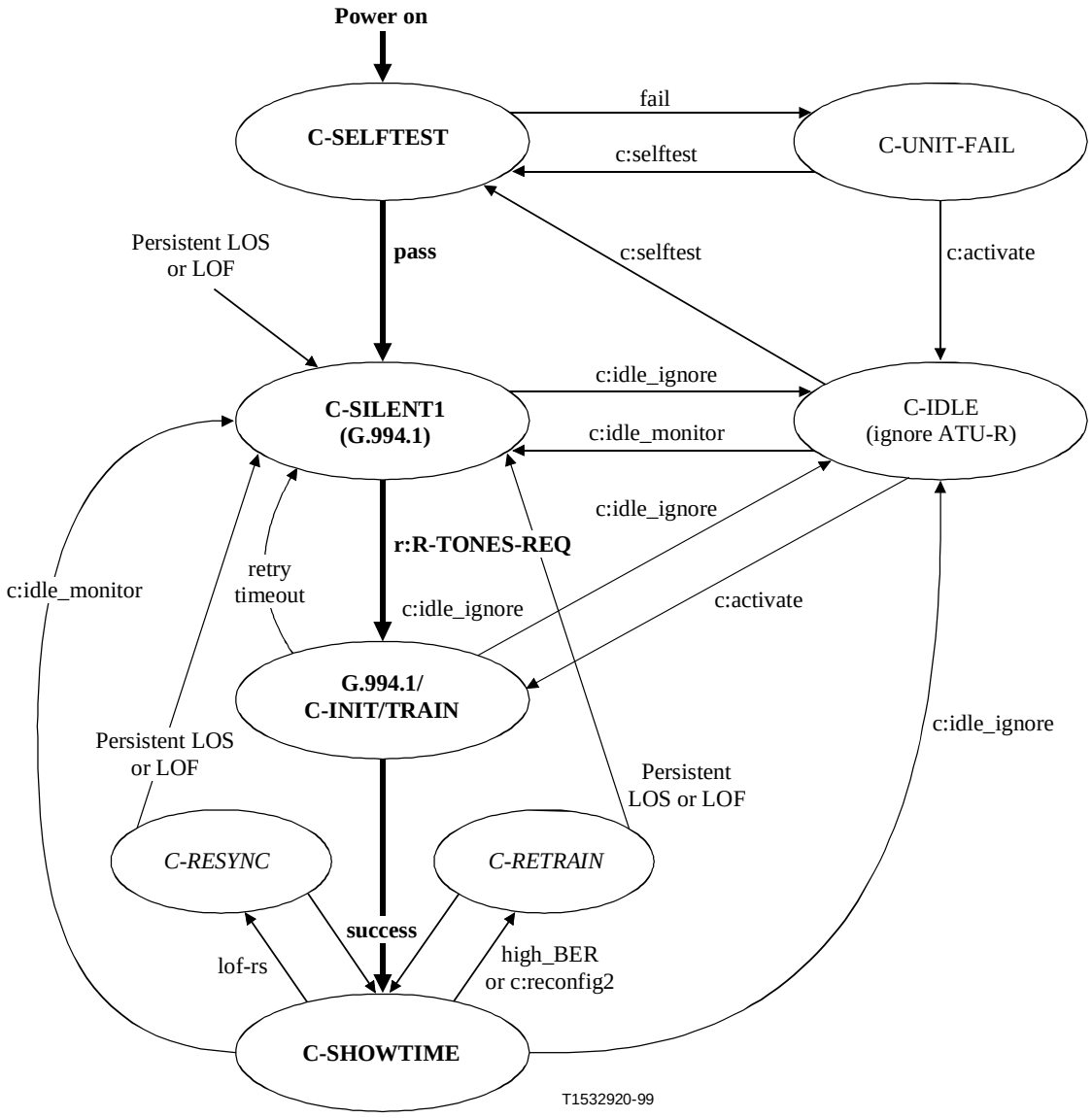

NOTE 1 – Event Sources:
c: __ host controller command.
r: __ received from ATU-R.
NOTE 2 – The main sequence of states is shown in **bold**.
NOTE 3 – Optional (vendor discretionary) states are shown in *italics*.
NOTE 4 – States are defined in Table D.1; terms in D.2.

Figure D.1/G.992.1 – State diagram for the ATU-C

IPR2025-00395
Petitioners' Exhibit 1011
Page 208 of 256

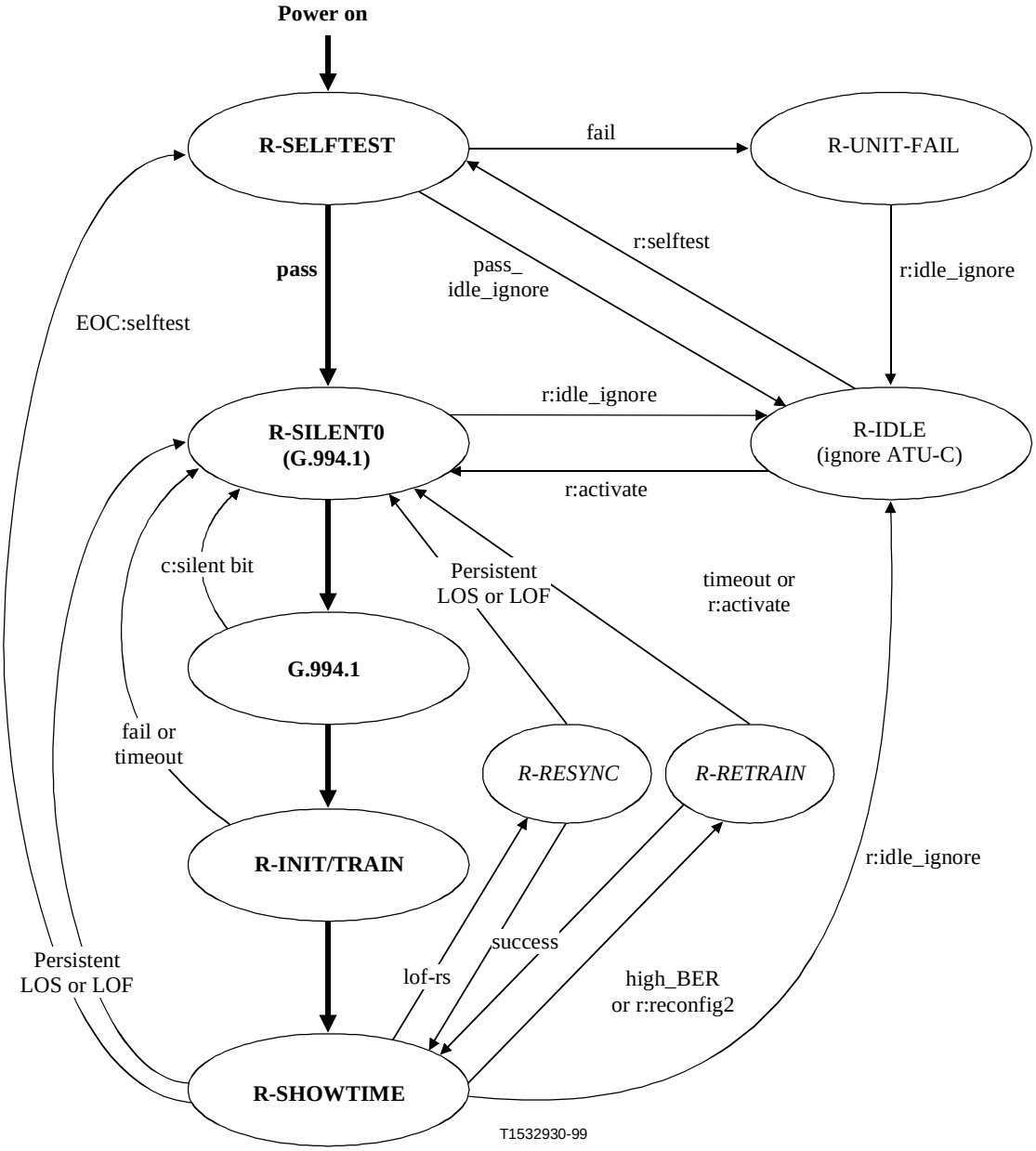

NOTE 1 – Event Sources:
r: __ host controller command.
c: __ received from ATU-C.
NOTE 2 – The main sequence of states is shown in **bold**.
NOTE 3 – Optional (vendor discretionary) states are shown in *italics*.
NOTE 4 – States are defined in Table D.2; terms in D.2.

Figure D.2/G.992.1 – State diagram for the ATU-R

IPR2025-00395
Petitioners' Exhibit 1011
Page 209 of 256

Table D.1/G.992.1 – ATU-C state definitions

State Name	Description
C-SELFTEST	Unit performs self test. Transmitter and receiver off (quiet at U-C interface); no response to host control channel (e.g. ACOT)
C-UNIT-FAIL	(self test failed) Monitor host control channel if possible (could allow ATU-x host controller to retrieve self test results)
C-IDLE (Idle; ignore ATU-R)	Transmitter and receiver off (no response to R-TONES-REQ). Monitor host control channel
C-TONES	Transmit C-TONES and transition back to C-IDLE
C-SILENT1 (see G.994.1) (Idle; monitor ATU-R)	Transmitter off Receiver on, monitor for R-TONES-REQ; if detected, transition to C-Activate/Init/Train state Monitor host control channel

G.994.1/
C-INIT/TRAIN
(Starts with State C-TONES of G.994.1; includes 10.2, 10.4, 10.6 and 10.8)
	Initialize Train_Try_Counter
	while (--Train_Try_Counter ≥ 0)
	{ Transmit C-TONES
	Start timer
	If G.994.1 begins before timer expires
	proceed with initialization/training
	If successful, transition to C-ACTIVE
	}
	Transition to C-SILENT1
	Monitor host control channel

C-SHOWTIME (Steady State Data Transmission; 6, 9.3 and 11)	Perform steady state bit pump functions (user data channels active) Allow bit swaps and non-intrusive reconfigurations (reconfig1) Monitor host control channel Monitor alarms, EOC, AOC If LOS or LOF event, transition to C-Activate/Init/Train
C-RESYNC (non-mandatory; vendor proprietary)	(State is entered when some algorithm, possibly based on loss of ADSL synch framing, determines that resync is required) Declare SEF (defined in 9.3.1.3) – user data transmission has been disrupted If signal present (i.e. not LOS) Attempt to find synch pattern and realign (vendor proprietary) If successful, remove SEF and transition to C-ACTIVE else time-out on SEF, declare LOF event, transition to C-Activate/Init/Train else time-out on LOS, declare LOS event, transition to C-Activate/Init/Train
C-RETRAIN (fast retrain for further study)	(State can only be entered if received signal is still present and if ADSL frame synch is still maintained) Declare SEF (defined in 9.3.1.3) – user data transmission has been disrupted If signal present (i.e. not LOS) Channel ID and bit allocation calculation Reset Data Framing and V-interface circuits If successful, remove SEF and return to C-ACTIVE else time-out on SEF, declare LOF event, transition to C-Activate/Init/Train else time-out on LOS, declare LOS event, transition to C-Activate/Init/Train

IPR2025-00395
Petitioners' Exhibit 1011
Page 210 of 256

Table D.2/G.992.1 – ATU-R state definitions

State Name	Description
R-SELFTEST	Unit performs self test. Transmitter and receiver off (quiet at U-R interface). If self test passes and receiver is in automatic training mode, transition to R-SILENT0 If self test passes and receiver is under external control, transition to R-IDLE else transition to R-UNIT-FAIL
R-UNIT-FAIL	(self test failed -- no exit from this state, except to cycle power)
R-SILENT0/ G.994.1	See G.994.1 Monitor host control channel
R-INIT/TRAIN (Starts with State R-TONES-REQ of G.994.1; includes 10.3, 10.5, 10.7 and 10.9)	Transmit R-ACK Proceed with Initialization and Training Sequence If successful, transition to R-ACTIVE else transition to R-SILENT0
R-SHOWTIME (Steady State Data Transmission; 7, 9.3, and 11)	Perform steady state bit pump functions (user data channels active) Allow bit swaps and non-intrusive reconfigurations (reconfig1) Monitor alarms, EOC, AOC, host control channel If LOS or LOF event, transition to R-SILENT0
R-IDLE (ignore ATU-C)	Transmitter and receiver off, monitor host control channel
R-RESYNC (non-mandatory; vendor proprietary)	(State is entered when some algorithm, probably based on loss of ADSL synch framing, determines that resync is required) Declare SEF (defined in 9.3.1.3) – user data transmission has been disrupted If signal present (i.e. not LOS) Attempt to find synch pattern and realign (vendor proprietary) If successful, remove SEF and transition to R-ACTIVE else time-out on SEF, declare LOF event, transition to R-SILENT0 else time-out on LOS, declare LOS event, transition to R-SILENT0
R-RETRAIN (fast retrain for further study)	(State can only be entered if received signal is still present and if ADSL frame synch is still maintained) Declare SEF (defined in 9.3.1.3) – user data transmission has been disrupted Reset Data Framing and T-interface circuits If signal present (i.e. not LOS) Channel ID and bit allocation calculation If successful, remove SEF and transition to R-ACTIVE else time-out on SEF, declare LOF event, transition to R-SILENT0 else time-out on LOS, declare LOS event, transition to R-SILENT0

IPR2025-00395
Petitioners' Exhibit 1011
Page 211 of 256

ANNEX E

POTS and ISDN-BA splitters

The purpose of the POTS splitter is twofold. For ADSL signals, protection from the high-frequency transients and impedance effects that occur during POTS operation – ringing transients, ring trip transients, and off-hook transients and impedance changes – is provided. For POTS voiceband service, the low-pass filters provide protection from ADSL signals which may impact, through non-linear or other effects, remote devices (handset, fax, voiceband, modem, etc.) and central office operation. This filtering should be performed while maintaining the quality of the end-to-end voiceband connection (i.e. between the POTS and PSTN interfaces).

Likewise, the ISDN-BA splitter is also twofold.

E.1 Type 1 – European

E.1.1 Impedance matching

The European harmonized matching impedance, $Z_{complex(1)}$, for non-voice terminals (e.g. voiceband modems). This compromise impedance is detailed more fully in Recommendation Q.552.

Different three-element compromise impedances are used for voice terminal operation in different countries. The text below details the reference impedances and any other country specific parameters. Component values are ±0.1% unless otherwise stated.

E.1.1.1 European harmonized – Non-voice terminals

$Z_{complex(1)}$ = 150 nF // 750 Ω + 270 Ω

E.1.1.2 Voice terminals

$Z_{complex(1)}$ = 150 nF // 750 Ω + 270 Ω

$Z_{complex(2)}$ = 230 nF // 1050 Ω + 320 Ω

$Z_{complex(3)}$ = 115 nF // 820 Ω + 220 Ω

$Z_{real(1)}$ = 600 Ω

$Z_{real(1)}$ = 800 Ω

E.1.2 Return loss

TELE port and LINE port return loss against $Z_{complex(n)}$ or $Z_{real(n)}$ when the other port is terminated in $Z_{complex(n)}$ or $Z_{real(n)}$ shall be as shown in Figure E.1.

IPR2025-00395
Petitioners' Exhibit 1011
Page 212 of 256

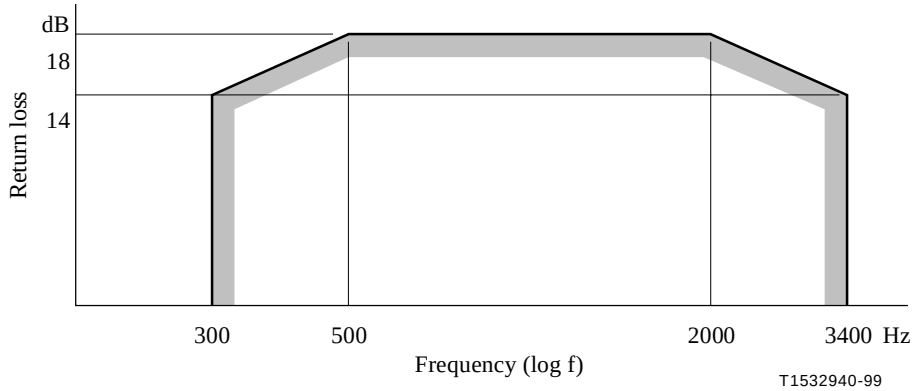

Figure E.1/G.992.1 – Minimum value of return loss against the test network for the exchange impedance at a 2-wire interface

E.1.3 Insertion loss

TELE port to LINE port insertion loss shall be < 1 dB at 1 kHz for $Z_{complex(n)}$

TELE port to LINE port insertion loss shall be < 0.3 dB at 1 kHz for $Z_{real(n)}$

E.1.4 Insertion loss distortion

Insertion loss distortion 200-4000 Hz	< ±1 dB	term = $Z_{complex(n)}$

E.1.5 Isolation

Isolation resistance, branch-earth	> 10 M Ω	term = ∞ Ω; 100 V DC
Isolation resistance, branch-branch	> 1 M Ω	term = ∞ Ω; 100 V DC
DC resistance	< 50 Ω	term = 0 Ω.

E.1.6 Signal power

Maximum peak signal power in 200-4000 Hz	< 3 dBm ETS-300.001 § 4.4.2 on 600 Ω
Loop current	< 100 mA

E.1.7 Ringing

Ringing frequency	25-50 Hz
Ringing AC	< 100 V_{rms}
Ringing DC (AC superimposed on DC)	< 100 V

E.1.8 Unbalance about Earth (ETS-300.001, § 4.2.1 and § 4.2.2)

LCL (test method Recommendation G.117, subclause 4.1.3)

TCL (test method Recommendation G.117, subclause 4.1.3)

15-50 Hz	> 40 dB terminated with 600 Ω
50-600 Hz	> 46 dB terminated with 600 Ω
600-3400 Hz	> 52 dB terminated with 600 Ω

IPR2025-00395
Petitioners' Exhibit 1011
Page 213 of 256

E.1.9 Frequencies and levels for pulse metering (ETS-300.001, § 1.7.8)

Frequency	12/16 kHz ±1%
Insertion loss	< 3 dB in 200 Ω
Maximum level	< 5 V_{rms} in 200 Ω

E.2 Type 2 – North America

E.2.1 Introduction

This subclause contains specifications for a POTS splitter appropriate to North America. The requirements contained in E.2 shall be met for a POTS splitter designed for deployment in North America. The purpose of the low-pass filters is twofold. For ADSL signals, protection from the high-frequency transients and impedance effects that occur during POTS operation – ringing transients, ring trip transients, and off-hook transients and impedance changes – is provided. For POTS voiceband service, the low-pass filters provide protection from ADSL signals which may impact, through non-linear or other effects, remote devices (handset, fax, voiceband, modem, etc.) and central office operation. This filtering should be performed while maintaining the quality of the end-to-end – that is, between the POTS and PSTN interfaces of Figure E.5 – Voiceband connection.

E.2.1.1 POTS splitter function location

Two POTS splitter functions are defined; one for the remote (R) end and one for the central office (CO) end. The function can be implemented either internally to the ATU-x modem or externally. In either case, all functions specified are required (exception is maintenance test signatures, see E.2.1.7).

In Figure E.2, the capacitors are shown as 0.12 μF. These capacitors are for DC blocking. They work in concert with the input to the modem's HPF function and are to be included in the input impedance calculation of the modem. This point is not available for inspection when the CO splitter function is provided internally to the modem and, therefore, the capacitors do not appear explicitly. The DC blocking function is, however, provided in the normal HPF function. This difference is taken into account in the test setups in this annex.

In a case where some or all of the HPF function are incorporated in the external CO POTS splitter, the 0.12 μF capacitors do not appear since the DC blocking will be included in the HPF function. Incorporating some or all of the HPF in the CO POTS splitter is for further study.

E.2.1.2 Frequencies used in testing

Two bands of frequencies are used for testing:

- Voiceband (VB) frequencies are from 0-4 kHz.
- ADSL Band frequencies are from 30-1104 kHz.

Testing is not performed between 4-30 kHz but it is expected that the LPF will be well behaved in that area.

All external POTS splitters with LPF or LPF/HPF included shall meet specifications between 30 and 1104 kHz.

Not all integral modem designs are intended to occupy the full spectrum between 30 and 1104 kHz. In each implementation, testing may be performed only on the utilized frequency band. The vendor in literature and in each test report shall explicitly state the band of frequencies used in testing each modem.

IPR2025-00395
Petitioners' Exhibit 1011
Page 214 of 256

E.2.1.3 Balanced terminations

All testing is done in a BALANCED (i.e. metallic) method. One end of some setups may contain an= unbalanced connection to facilitate testing methodology if the resultant measurement maintains balance.=

E.2.1.4 Single ended testing

Single ended testing is performed on each POTS splitter function. Specifications contained in this annex are written for single splitter functions, not end-to-end. Compliance with this annex does NOT guarantee end-to-end performance since the modems are not included in this annex testing.

E.2.1.5 POTS splitter functions

The external central office POTS splitter may be mounted some distance from the ATU-C modem. To protect from DC faults, DC blocking capacitors shall be included on the xDSL port of the POTS Splitter. These capacitors form part of the input to the xDSL HPF function and must be included in calculations of that input impedance (approximately 20-34 nF). If the POTS splitter function is included entirely within the modem, the capacitors shall be included as part of the HPF function. See Figure E.2.

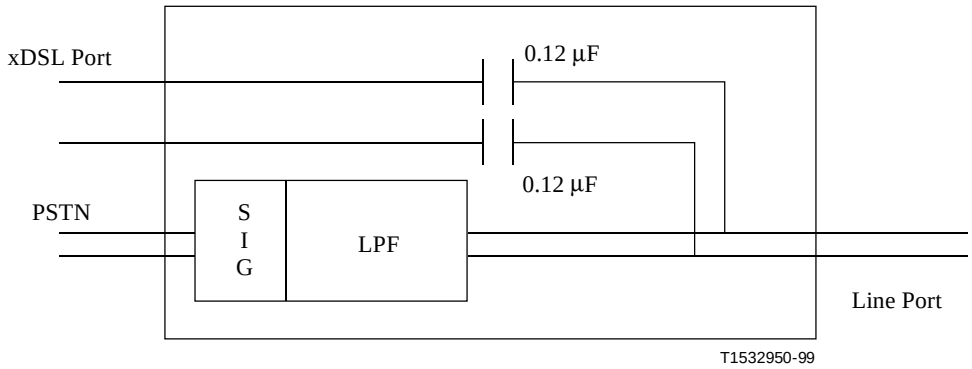

Figure E.2/G.992.1 – External POTS central office splitter without HPF function

The DC blocking capacitors are for the external POTS splitter, without the HPF function, only. Internal splitter function or external splitters with a complete HPF function may incorporate this capacitance in the input to the HPF function. The DC blocking capacitors are optional on splitters integrated within the equipment closely associated with the ATU-C. See Figure E.3.

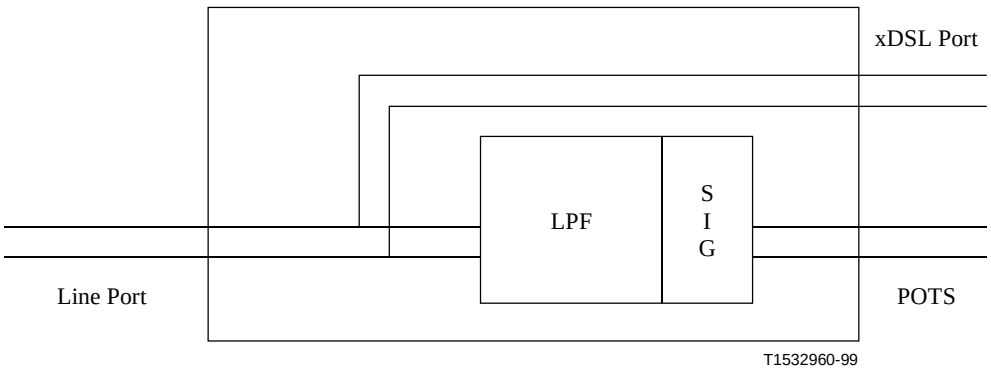

Figure E.3/G.992.1 – External POTS remote splitter

IPR2025-00395
Petitioners' Exhibit 1011
Page 215 of 256

E.2.1.6 ZHP defined

To facilitate testing of the POTS splitter independently of the actual modem or specific vendor, two ZHPs are defined in Figure E.4 to allow proper termination of the xDSL port during voiceband testing. The ZHP is valid only for voiceband frequencies. The combination of capacitors in the ZHP-r is only representative. The input shall be 27 nF, however derived.

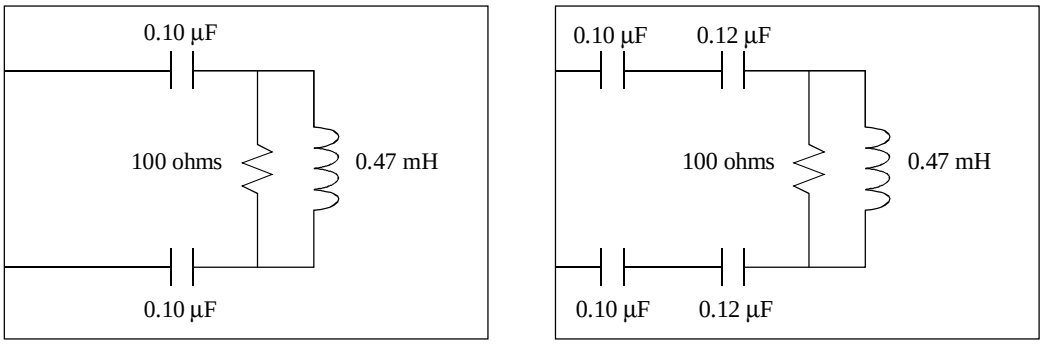

ZHP for External Central Office splitter

ZHP Remote end

NOTE – Component Tolerances: Capacitors: 2.5%, Resistors: 1%, Coils: 5%.

Figure E.4/G.992.1 – ZHP definitions

E.2.1.7 Maintenance test signatures

If the maintenance test signatures are provided, they shall be as shown in Figure E.5.

In order to allow the POTS splitter to be managed by the network operational support systems and to be identified by metallic loop test systems, the POTS splitter function may contain signatures that are activated only by the metallic test systems. The signatures are unique for ADSL and are different for each end of the loop. All central office end POTS splitters shall have the same signature and all remote end POTS splitters shall have the same signature. The signatures are designed to be active only during the maintenance test mode and will not interfere with normal operation of the circuit. The signatures are located on the POTS/PSTN side of the LPF function, protecting the ADSL band frequencies from the non-linear effects of the diodes. The signatures are defined in Figure E.5.

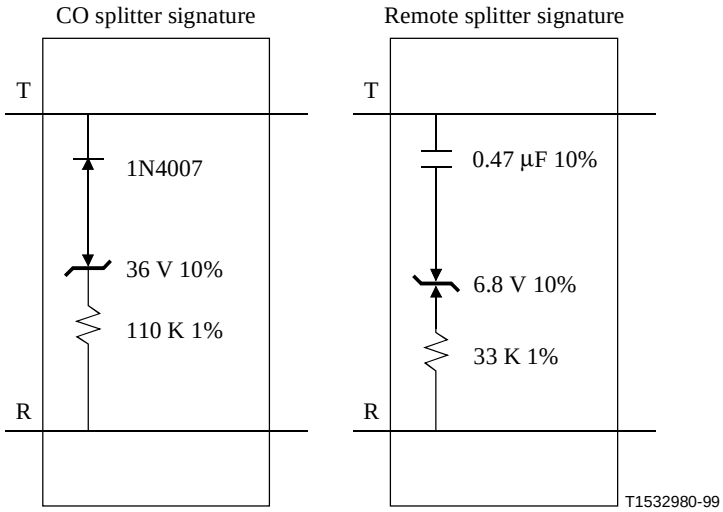

Figure E.5/G.992.1 – Maintenance test signatures

IPR2025-00395
Petitioners' Exhibit 1011
Page 216 of 256

E.2.2 DC characteristics

All requirements shall be met in the presence of all POTS loop currents from 0 mA to 100 mA. The low-pass filter shall pass POTS tip-to-ring DC voltages of 0 V to minus 60 V DC and ringing signals no larger than 103 V_{rms} superimposed on the DC signal at any frequency from 20 to 30 Hz.

The DC resistance from tip-to-ring at the PSTN interface with the U-C interface shorted, or at the POTS interface with the U-R interface shorted, shall be less than or equal to 25 Ω. The DC resistance from tip to ground and from ring to ground at the PSTN interface with the U-C interface open, or at the POTS interface with the U-R interface open, shall be greater than or equal to 5 MΩ.

E.2.3 Voiceband characteristics

E.2.3.1 Metallic balanced (differential mode)

E.2.3.1.1 Test loops

Loops to be used for testing are divided into two groups. This is done to obtain more specific requirements under the widely varying conditions of short and long loops and to account for the effect of the opposite splitter impedances being "seen" through the loop and affecting performance.

- Short loops: 0, 152 m (0.5 kft), 619 m (2.0 kft), 1520 m (5 kft) pairs of 26 AWG cables.
- Long loops: resistance design loops T #7, T #9, and T #13 and loops C #4, C #6, C #7 and C #8.

NOTE – Test loops are defined in Recommendation G.996.1.

E.2.3.1.2 Insertion loss at 1004 Hz

For each of the test loops specified in E.2.3.1.1, and using the test setup shown in Figures E.6 and E.7, the insertion loss from the source to the termination shall be measured with and without the splitter/ZHP combination inserted.

The increase in insertion loss at 1004 Hz on any of the test loops, due to the addition of the splitter/ZHP, shall be less than specified in Table E.1.

Table E.1/G.992.1 – Loss due to addition of splitter/ZHP

Description	Loss
Short loop, ZTc = 900, ZTr = 600	< 1.0 dB CO end
Long loop, ZTc = 900, ZTr = 600	< 0.75 dB CO end
Short loop, ZTc = 900, ZTr = 600	< 1.0 dB R end
Long loop, ZTc = 900, ZTr = 600	< 0.75 dB R end

E.2.3.1.3 Attenuation distortion in the voiceband

The variation of insertion loss with frequency shall be measured using the test setup in Figures E.6 and E.7. The defined ZHP will be attached to the xDSL port of the splitter. If the splitter is an internal part of the ATU, then the modem remains attached as the xDSL load. The increase in attenuation distortion, relative to the 1004 Hz insertion loss, caused by the POTS splitter with the ZHP (or modem) load attached using each of the test loops identified above, shall be less than that specified in Table E.2.

IPR2025-00395
Petitioners' Exhibit 1011
Page 217 of 256

Table E.2/G.992.1 – Increase in attenuation distortion caused by POTS splitter

Description	Loss (Note)	
	0.2-3.4 kHz	3.4-4.0 kHz
Short loop, CO splitter, ZTc = 900, ZTr = 600	+1.5 to –1.5	+2.0 to –2.0
Long loop, CO splitter, ZTc = 900, ZTr = 600	+0.5 to –1.5	+1.0 to –1.5
Short loop, R splitter, ZTc = 900, ZTr = 600	+1.5 to –1.5	+2.0 to –2.0
Long loop, R splitter, ZTc = 900, ZTr = 600	+0.5 to –1.5	+1.0 to –1.5
NOTE – Attenuation is a positive value, gain is a negative value.		

Figure E.6 defines the test configuration and the value of the test components that shall be used for transmission measurements in the voiceband for the central office POTS splitter.

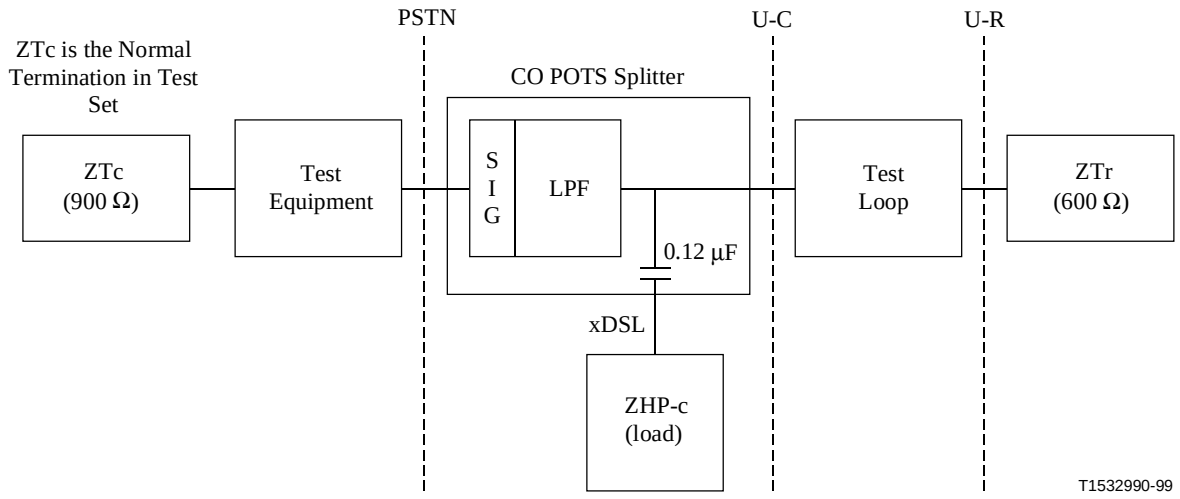

ZHP-c = the impedance presented to the POTS connection by an ATU-C through the capacitance of the POTS splitter DC blocking capacitors

NOTE – The DC blocking capacitors are only for the external POTS splitter without the HPF function. Internal splitter function or external splitters with a complete HPF function may incorporate this capacitance in the input to the PHF function.

Figure E.6/G.992.1 – Transmission measurements in voiceband for the central office splitter

IPR2025-00395
Petitioners' Exhibit 1011
Page 218 of 256

Figure E.7 defines the test configuration and the value of the test components that shall be used for transmission measurements in the voiceband for the remote POTS splitter.

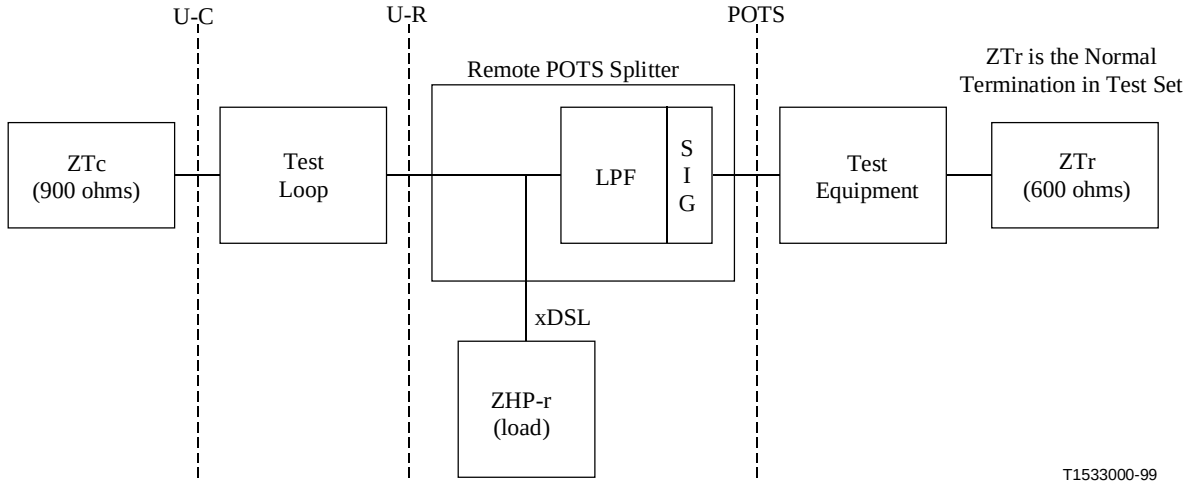

ZTc = 900 Ω
ZTr = 600 Ω
ZHP-r = the impedance presented to the POTS connection by an ATU-R

Figure E.7/G.992.1 – Transmission measurements in voiceband for the remote POTS splitter=

E.2.3.1.4 Delay distortion

The delay distortion of the POTS splitter shall be measured using Figures E.6 and E.7. The increase in delay distortion caused by the POTS splitter in each of the test loops shall be less than that specified in Table E.3.

Table E.3/G.992.1 – Increase in delay distortion caused by POTS splitter

Description	Delay distortion	
	0.6-3.2 kHz	0.2-4.0 kHz
Short loop, CO splitter, ZTc = 900, ZTr = 600	200 µs	250 µs
Long loop, CO splitter, ZTc = 900, ZTr = 600	200 µs	250 µs
Short loop, R splitter, ZTc = 900, ZTr = 600	200 µs	250 µs
Long loop, R splitter, ZTc = 900, ZTr = 600	200 µs	250 µs

E.2.3.1.5 Return loss

Figures E.8 and E.9 define the test configuration and the value of the test components that shall be used for impedance measurements in the voiceband for both the central office and remote POTS splitter units.

IPR2025-00395
Petitioners' Exhibit 1011
Page 219 of 256

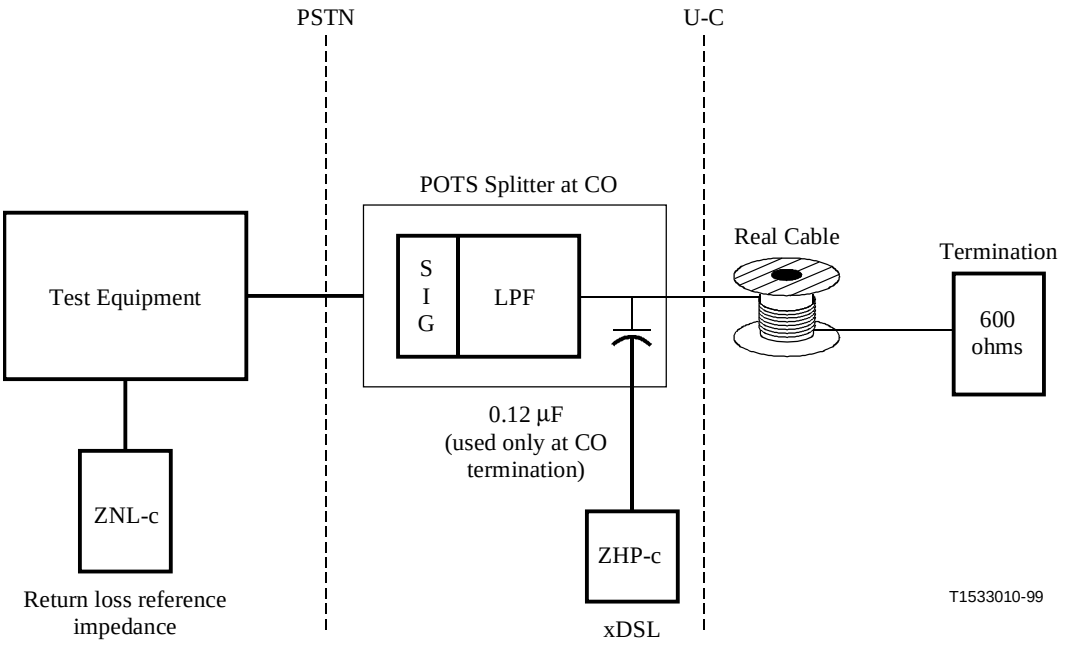

Figure E.8/G.992.1 – CO POTS splitter return loss setup

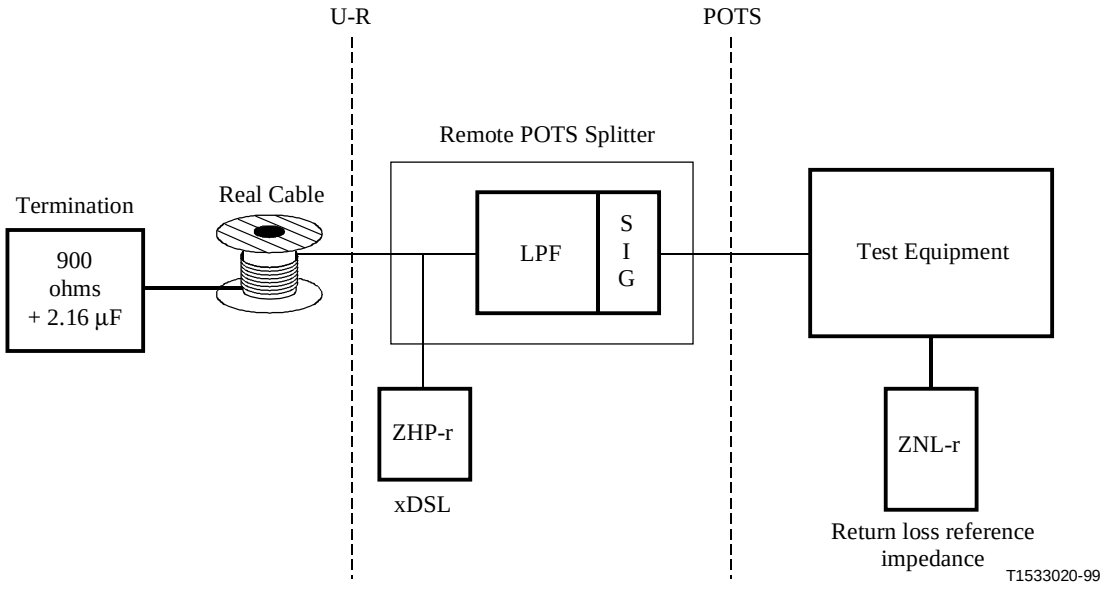

ZNL-c (see Note 2) = 800 Ω in parallel with the series connection of a 100 Ω resistor and a 50 nF capacitor (long loop model seen from CO)
ZNL-r (see Note 2) = 1330 Ω in parallel with the series connection of a 348 Ω resistor and a 100 nF capacitor (long loop model seen from RT)
ZHP-c = the impedance presented to the POTS connection by an ATU-C through the capacitance of the POTS splitter DC blocking capacitors
ZHP-r = the impedance presented to the POTS connection by an ATU-R

NOTE 1 – The DC blocking capacitors are for the external POTS splitter without the HPF function only. Internal splitter function or external splitters with a complete HPF function may incorporate this capacitance in the input to the HPF function.
NOTE 2 – This value comes from the Bellcore LSSGR as a reference compromise impedance for non-loaded cable.

Figure E.9/G.992.1 – Remote POTS splitter return loss setup

IPR2025-00395
Petitioners' Exhibit 1011
Page 220 of 256

The return loss of each splitter under the specified conditions, either with or without the ZHP attached, shall be greater than the values specified in Table E.4.

Table E.4/G.992.1 – Splitter return loss

Description	Zref	Zterm (Ω)	ERL (dB)	SRL-L (dB)	SRL-H (dB)	Comments
CO splitter	ZNL-c	600	8	5	5	
CO splitter	ZNL-c	600	N/A	N/A	2	Single freq.
RT splitter	ZNL-r	900	6	5	3	
RT splitter	ZNL-r	900	N/A	N/A	2	Single freq.
NOTE – Individual frequencies start at 2200 Hz and sweep to 3400 Hz.						

E.2.3.1.6 Distortion

The distortion contributed by the low-pass filter shall be measured using the test configuration of Figures E.6 and E.7 and the null loop.

With an applied 4-tone set, at a level of –9 dBm, the second and third order intermodulation distortion products shall be at least 57 dB and 60 dB, respectively, below the received signal level.

E.2.3.2 Longitudinal balance of POTS splitter

The longitudinal balance of the POTS splitter can be measured using two different techniques. One technique is to treat the POTS splitter as a separate entity which requires using the 2 PORT testing technique. The other technique is to test the CO splitter containing the POTS splitter, ATU-C and CO line card combination as a one port network. This one port network would require using the 1 PORT testing technique.

E.2.3.2.1 Longitudinal balance of POTS splitter using 2 PORT testing technique

This method shall be used to test a POTS splitter when it is treated as a separate entity.

The longitudinal balance of the POTS splitter (without loops), measured in either direction between the POTS/PSTN and line port, as a two-port device, shall be measured in accordance with the latest North American measurement practices. In the case where DC blocking capacitors are included as part of the splitter function on the xDSL port, the xDSL port shall be shorted. Otherwise, the xDSL port shall be open. Because of the maintenance signatures, the applied longitudinal voltage shall be maximum 3.0 V p-p. The balance shall be greater than 58 dB for frequencies between 200 Hz-1 kHz with a straight line level decreasing to 53 dB at 3 kHz. A DC bias current of 25 mA will be applied.

The termination of the test set is set for series-balance measurement per the latest North American measurement practices. Prior to testing, a test circuit balance (calibration) of 77 dB (58 + 19 dB) will be achieved to ensure 1 dB accuracy.

Figure E.10 shows the test setup for the external CO POTS splitter. The xDSL port is shorted. If testing longitudinal balance on an integrated CO modem, the ATU-C shall be connected but powered down.

Figure E.11 shows the test setup for the external remote POTS splitter.

IPR2025-00395
Petitioners' Exhibit 1011
Page 221 of 256

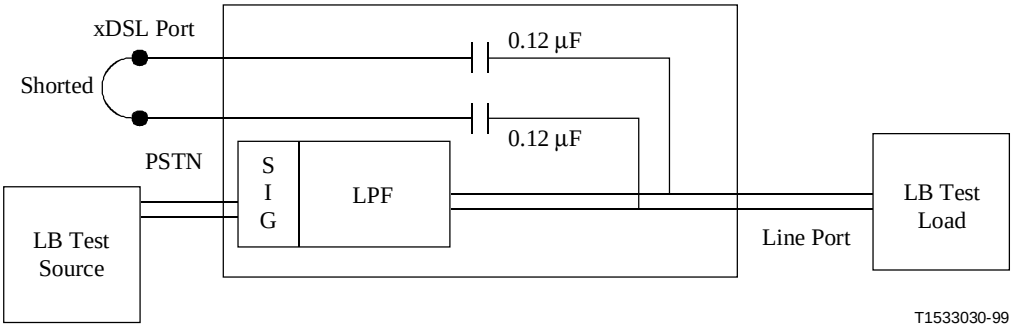

Figure E.10/G.992.1 – Longitudinal balance CO test setup

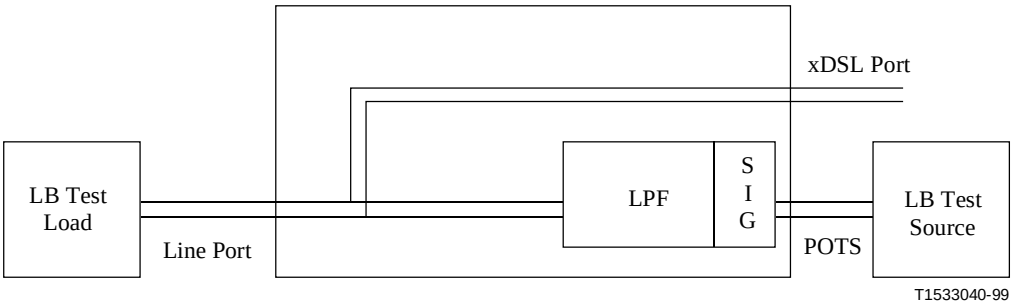

Figure E.11/G.992.1 – Longitudinal balance remote test setup

E.2.3.2.2 Longitudinal balance of POTS splitter using 1 PORT testing technique

This method shall be used to test a CO splitter when the POTS splitter, ATU-C and CO line card combination is treated as a one port network.

The longitudinal balance of the combined POTS splitter, ATU-C and CO line card (without loops) shall be measured in accordance with the latest North American measurement practices. Because of the maintenance signatures, the applied longitudinal voltage shall be maximum 3.0 V p-p. The balance shall be greater than 52 dB for frequencies between 200 Hz-3.2 kHz. A DC POTS load to generate a bias current of 25 mA will be used.

Prior to testing, a test circuit balance (calibration) of 71 dB (52 + 19 dB) will be achieved to ensure 1 dB accuracy.

Figure E.12 shows the test setup for the POTS splitter, ATU-C and CO line card combination one port network.

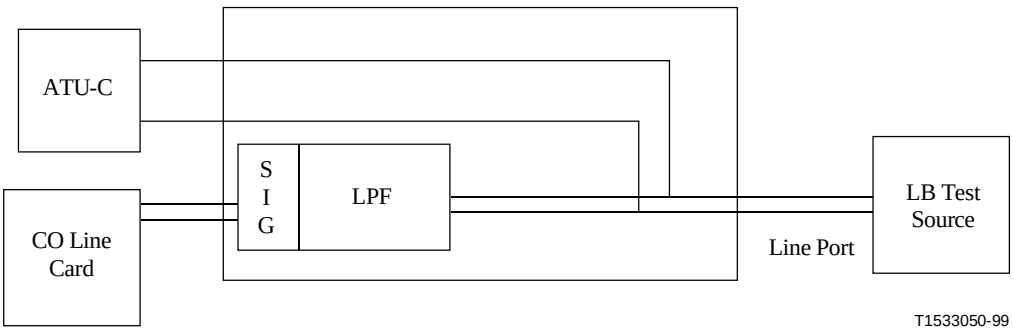

Figure E.12/G.992.1 – Longitudinal balance CO test setup for 1 PORT networks

IPR2025-00395
Petitioners' Exhibit 1011
Page 222 of 256

E.2.3.3 Transparent testing capacitance

To allow the current metallic test systems to continue to test with current test capabilities, an input impedance is defined for a special, narrow-frequency band.

E.2.3.3.1 Tip to ring capacitance

The intent of this requirement is to limit the maximum capacitance seen by metallic line testing systems. By setting this limit, the metallic test systems can still test POTS services with the accuracy and dependability they have today.

Overall, the admittance of the POTS or PSTN port shall be capacitive.

The capacitance present at either the POTS or PSTN interfaces in the frequency range of 20-30 Hz shall be a maximum of 300 nF. This amount includes the capacitance of the two POTS splitters with attached modems.

The following, per end, maximum/minimum measurements as shown in Figure E.13 shall be met:

- POTS splitter, either CO or remote without the modem connected:
  - 115 nF Max.
  - 20 nF Min.
- Modem input allowance, including the DC blocking capacitors at the CO end:
  - 35 nF Max.
  - 20 nF Min.
- Modem with integral POTS splitter function or – external POTS splitter with both HPF and LPF functions, are the sum of the above:
  - 150 nF Max.
  - 40 nF Min.

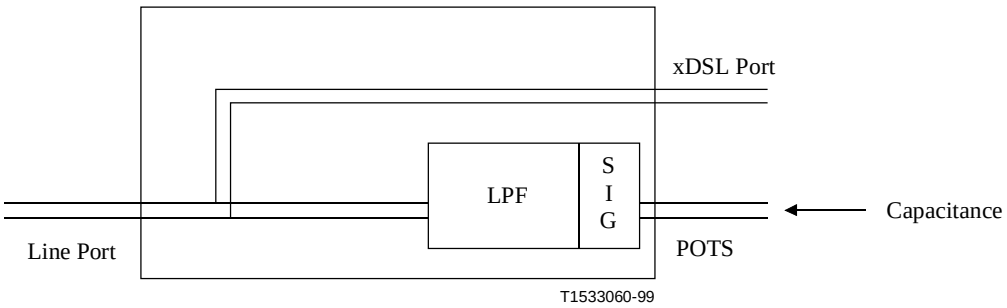

Figure E.13/G.992.1 – Capacitance test

E.2.3.3.2 Capacitance to ground

There should be no designed AC path to ground. In order to maintain the ability to test accurately, the maximum stray capacitance to ground from either leg of the POTS splitter shall be less than 1.0 nF.

E.2.4 ADSL band testing

E.2.4.1 ADSL band attenuation

The insertion loss of the low-pass filter and ZHP (i.e. the difference in attenuation measured with and without the filter) measured as shown in Figures E.14 and E.15 shall be greater than 65 dB from 32 to 300 kHz and 55 dB from 300 to 1104 kHz with an input level of 10 dBm.

IPR2025-00395
Petitioners' Exhibit 1011
Page 223 of 256

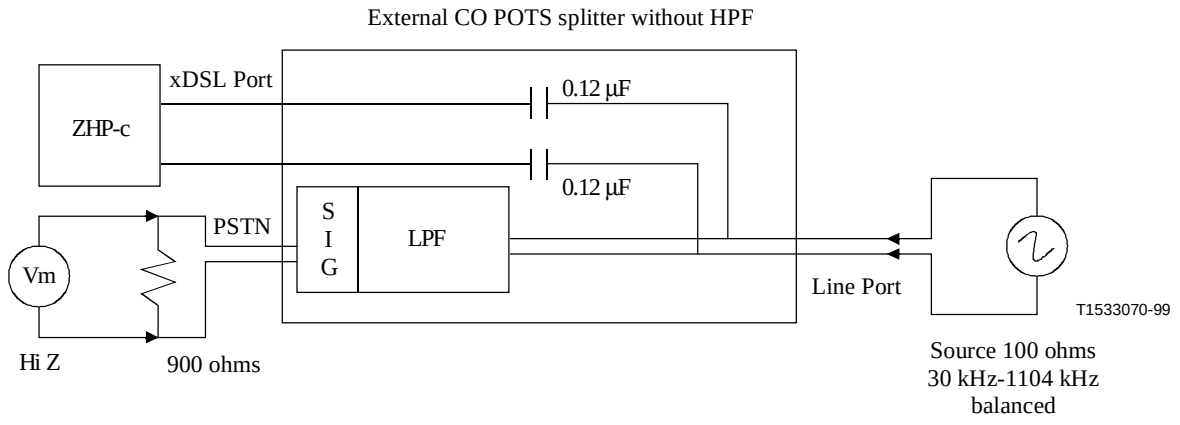

Figure E.14/G.992.1 – Measurement of the CO splitter attenuation in the ADSL band

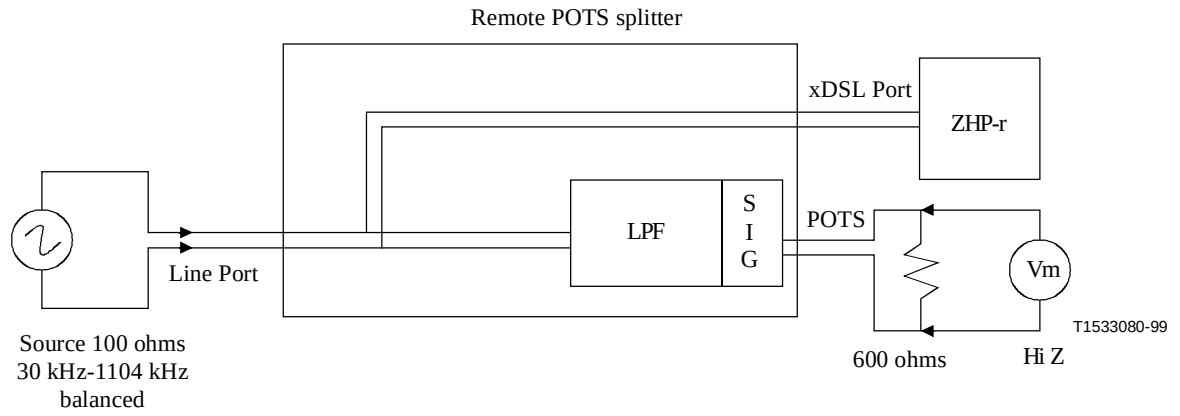

Figure E.15/G.992.1 – Measurement of the remote splitter attenuation in the ADSL band

E.2.4.2 Input impedance (loading of ADSL signal path)

The insertion loss caused by the low-pass filter in the band from 30 to 1104 kHz between nominal impedances with an input level of –10 dBm, as shown in Figures E.16 and E.17 shall be no more than 0.25 dB.

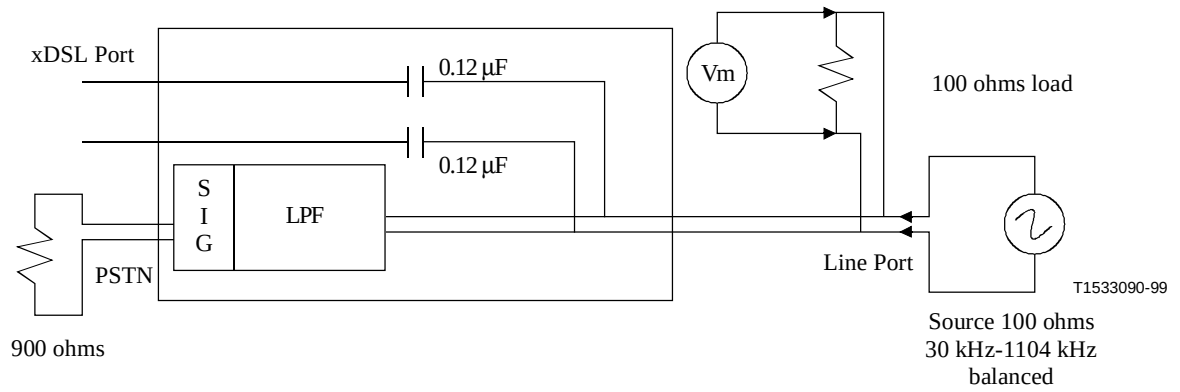

Figure E.16/G.992.1 – Measurement of loading effect of the CO splitter in the ADSL band

IPR2025-00395
Petitioners' Exhibit 1011
Page 224 of 256

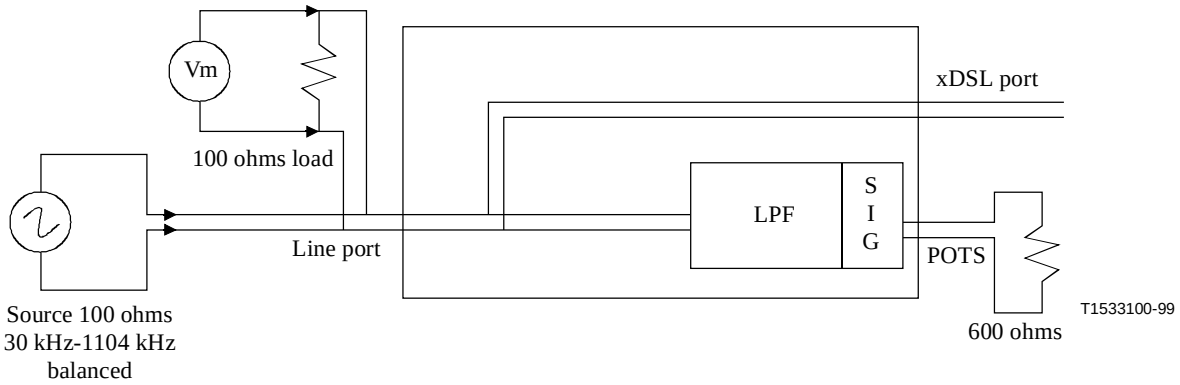

Figure E.17/G.992.1 – Measurement of loading effect of the Remote Splitter in the ADSL band

E.2.5 Home premises physical considerations

E.2.5.1 Wiring considerations

The running of ADSL signals and POTS signals together within a single multiple pair cable cross couples POTS noises into the received ADSL signals. These POTS noises are generated as the result of ringing, ringing trip, dial pulsing, and on/off hook operation. The levels of these noises are great enough that without adequate pair-to-pair isolation, errors in the received data are possible. This quality of service degradation may be mitigated by the use of interleaving or error control in any higher-level data communications protocol.

The wiring configuration reference model, using separate cables, for an external POTS Splitter is shown in Figure E.18. If POTS and ADSL are to be run in the same cable, intercable isolation is assumed to be a minimum of 80 dB between pairs (i.e. CAT5 cable). It must be noted that the length of interpremises cabling must be included in the transmission link budgets. Use of other cable types (i.e. Quad or Standard twisted pairs) with lower separation specifications may result in higher errors and lower performance.

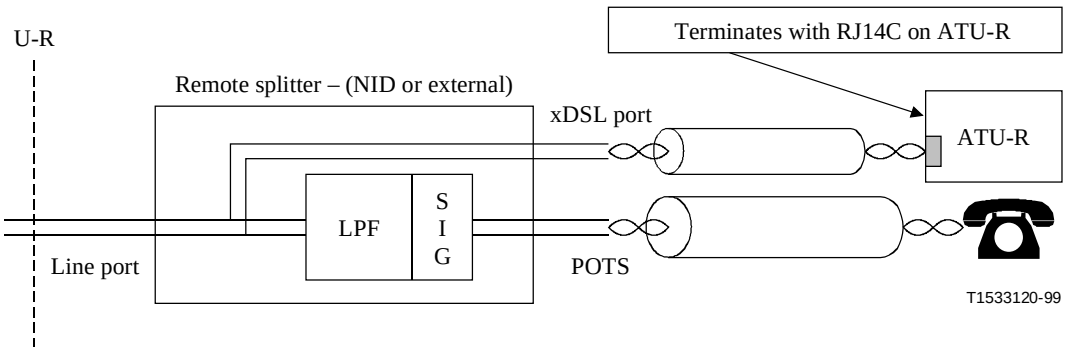

Figure E.18/G.992.1 – Home Premise Wiring on Separate sheaths for ATU-R

E.3 Type 3 – ADSL above ISDN (ITU-T G.961 Appendix I or II)

This subject is for further study.

IPR2025-00395
Petitioners' Exhibit 1011
Page 225 of 256

E.4 Type 4 – Type for Japan

E.4.1 Introduction

This subclause describes specifications and testing methods for a POTS splitter appropriate to Japan. Both a central office (CO) POTS splitter and a remote (R) POTS splitter shall conform to them.

E.4.1.1 Frequencies and level of voiceband signal

The frequencies and level of the voiceband signal provided by the local switch (LS) are as follows:

- Signal frequency: 0.2-4.0 kHz.
- Signal level: maximum of +3 dBm.

A signal of +36 dBm at 400 Hz may be used as a howler signal.

E.4.1.2 External CO POTS Splitter Function

The external CO POTS splitter may be located some distance from the ATU-C modem. To protect against DC faults, DC blocking capacitors should be included in the xDSL port of the POTS splitter. These capacitors configure parts of the input to the xDSL HPF function, so they must be included when the input impedance is calculated. If the POTS splitter function is included entirely within the modem, the capacitors should be included as part of the HPF function.

E.4.1.3 ZHP Definition

To facilitate testing of the POTS splitter independently of the actual modem or specific vendor, two ZHPs are defined to allow proper termination of the xDSL port during voiceband testing. The ZHPs are valid only for voiceband frequencies. They shall be as shown in Figure E.19.

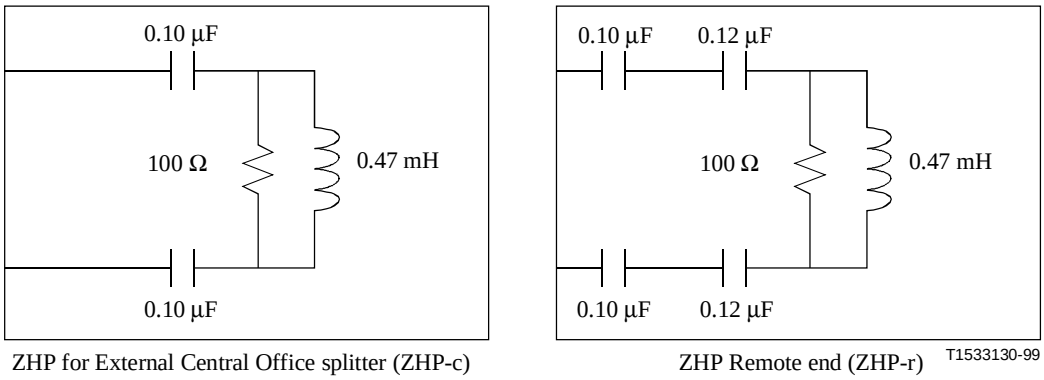

NOTE – Component Tolerances: Capacitors: 2.5%, Resistors: 1%, Coils: 5%.

Figure E.19/G.992.1 – ZHP definitions

E.4.2 DC Characteristics

This subclause contains the DC specifications, such as the loop DC current, the ringing, the L1-to-L2 DC voltage, the loop DC resistance, the isolation resistance, the L1-to-L2 capacitance, and the capacitance to ground, and the methods for measuring them.

All requirements included in E.4.2 must be met in the presence of all POTS loop currents ranging from 0 to 130 mA.

IPR2025-00395
Petitioners' Exhibit 1011
Page 226 of 256

E.4.2.1 Loop DC Current

The POTS splitter should ensure normal operation for loop DC currents ranging from 0 to 130 mA.

E.4.2.2 Ringing

The POTS splitter should accept the following ringing signals:

- Ringing frequency: 15-30 Hz.
- Ringing AC: maximum 100 V_{rms}.
- Ringing DC (AC superimposed on DC): maximum minus 60 V.

E.4.2.3 L1-to-L2 DC Voltage

The POTS splitter should accept POTS L1-to-L2 DC voltages of 0 to minus 60 V. In addition, it should be able to withstand a POTS L1-to-L2 DC voltage of up to 120 V for at least 10 s.

In addition, Recommendations K.20 and K.21 may be considered to ensure the POTS splitter availability when the surge voltage is applied to the POTS splitter.

E.4.2.4 DC Resistance

The L1-to-L2 DC resistance, at the PSTN interface with the U-C interface shorted, or at the POTS interface with the U-R interface shorted, shall be less than or equal to 40 Ω.

E.4.2.5 Isolation Resistance

The isolation resistance of the POTS splitter should remain intact under the following conditions.

E.4.2.5.1 L1-to-L2 Isolation Resistance

The L1-to-L2 isolation resistance at the PSTN interface with the U-C interface opened, or at the POTS interface with the U-R interface opened, shall be greater than or equal to 10 MΩ.

E.4.2.5.2 Isolation Resistance to Ground

The isolation resistance to ground at the PSTN interface with the U-C interface opened, or at the POTS interface with the U-R interface opened, shall be greater than or equal to 10 MΩ.

E.4.2.6 Capacitance

The capacitance of the POTS splitter should satisfy the following requirements.

E.4.2.6.1 L1-to-L2 Capacitance

The L1-to-L2 capacitance at the PSTN interface or the POTS interface shall be as follows:

POTS splitter, either CO or Remote without the modem connected	250 nF Max (DC – 30 Hz)
Modem input allowance, including the DC blocking capacitors at the CO end	35 nF Max (DC – 30 Hz)
Modem with integral POTS splitter function or – external POTS splitter with both HPF and LPF functions, are the sum of the above	285 nF Max (DC – 30 Hz)

E.4.2.6.2 Capacitance to ground

The capacitance to ground at the PSTN interface with the U-C interface opened, or at the POTS interface with the U-R interface opened, shall be less than 1.0 nF.

IPR2025-00395
Petitioners' Exhibit 1011
Page 227 of 256

E.4.3 AC Characteristics

This subclause contains the AC specifications of the voiceband, such as the insertion loss, the attenuation variation, the delay distortion, the return loss, the longitudinal balance, the distortion caused by harmonics, and the termination, and the methods for measuring them. In addition, it contains specifications and measurement methods for the out band and the ADSL band.

E.4.3.1 Voiceband

This subclause describes the AC characteristics in the voiceband.

E.4.3.1.1 Insertion Loss (at 1 kHz)

The insertion loss of the POTS splitter should be less than or equal to ±1.0 dB. Using the test setup shown in Figures E.20 and E.21, the insertion loss from the source to termination shall be measured with and without the POTS splitter/ZHP combination inserted.

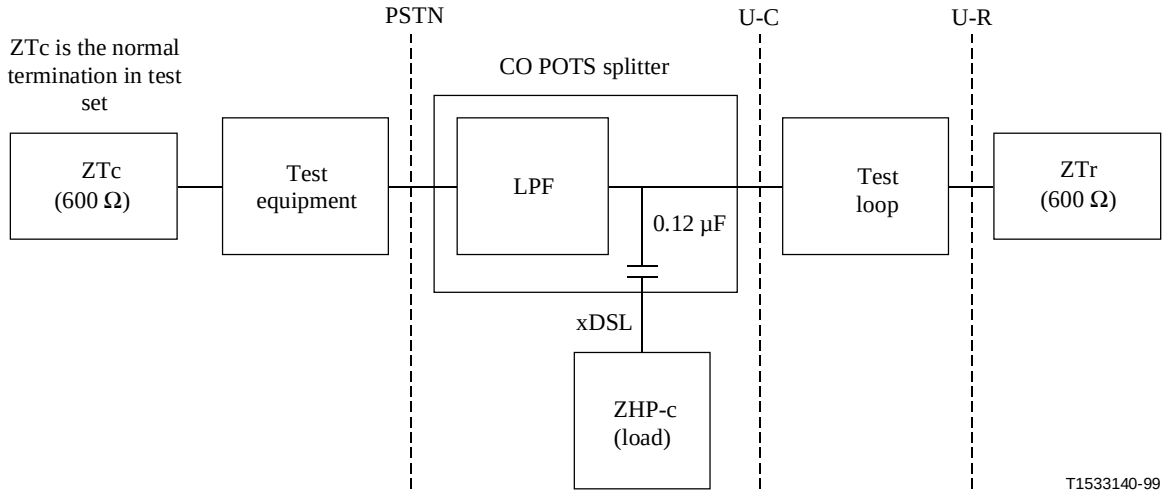

ZPH-c = the impedance of the CO ADSL modem specified in Figure E.19

NOTE 1 – The DC blocking capacitors are only for the external POTS splitter without HPF function. When the POTS splitter includes the HPF function, the HPF function has capacitors for DC blocking.
NOTE 2 – The test loop is specified in Figure E.22.

Figure E.20/G.992.1 – Transmission measurements in the voiceband for the CO POTS splitter

IPR2025-00395
Petitioners' Exhibit 1011
Page 228 of 256

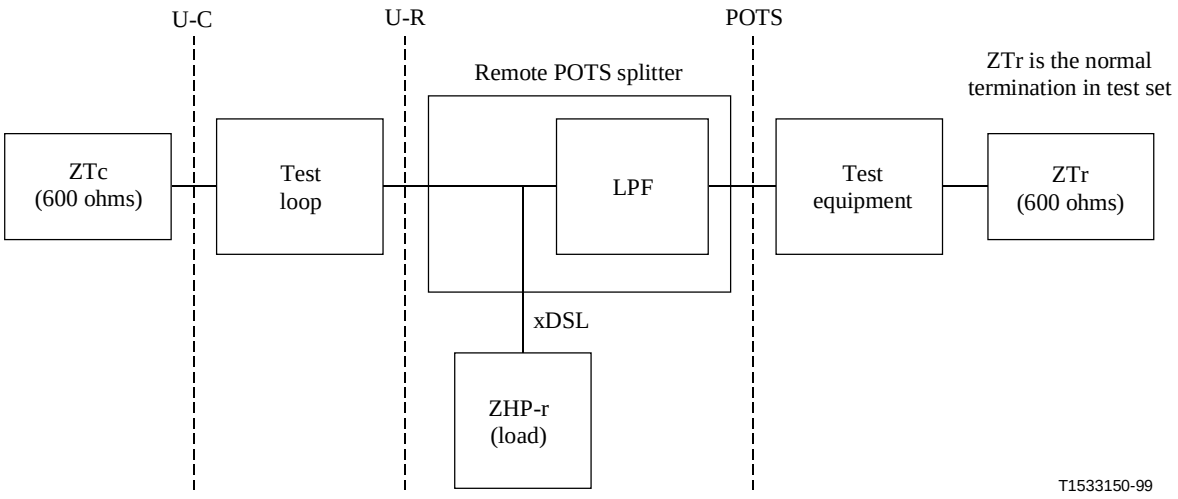

ZHP-r = the impedance of R ADSL modem specified in Figure E.19

NOTE – The test loop is specified in Figure E.22.

Figure E.21/G.992.1 – Transmission measurements in the voiceband for the R POTS splitter

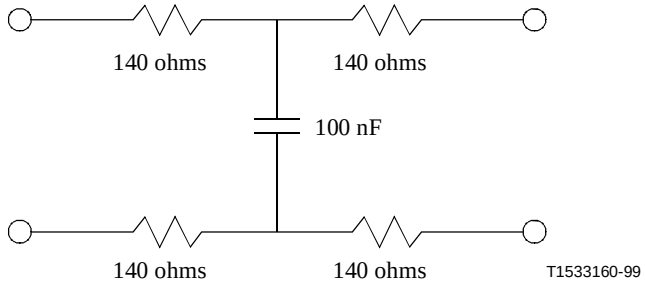

NOTE – This test loop model is valid only for voiceband frequencies.

Figure E.22/G.992.1 – Test loop definition

E.4.3.1.2 Attenuation distortion in voiceband variation

The variation of insertion loss value from that measured with 1 kHz shall be measured using the test setup in Figures E.20 and E.21. The increase in attenuation distortion, relative to the 1 kHz insertion loss, caused by the POTS splitter with the ZHP (or modem) load attached using the test loop defined by Figure E.22, between 0.2 and 3.4 kHz should be less than ±1.0 dB and between 3.4 and 4.0 kHz should be less than ±1.5 dB.

E.4.3.1.3 Delay Distortion

The increase in the delay distortion cause by the POTS splitter shall be as follows:

- 0.6-3.2 kHz: maximum of 200 µs.
- 0.2-4.0 kHz: maximum of 250 µs.

The delay distortion of the POTS splitter shall be measured using Figures E.20 and E.21.

IPR2025-00395
Petitioners' Exhibit 1011
Page 229 of 256

E.4.3.1.4 Return Loss

Figure E.23 defines the test configuration and the values of the test components that shall be used for impedance measurements in the voiceband for both the CO and R POTS splitter units. The return loss of each splitter under the specified conditions shall be as follows:

- 11 dB (0.2-1.5 kHz).
- 10 dB (1.5-2.0 kHz).
- 9 dB (2.0-3.4 kHz).

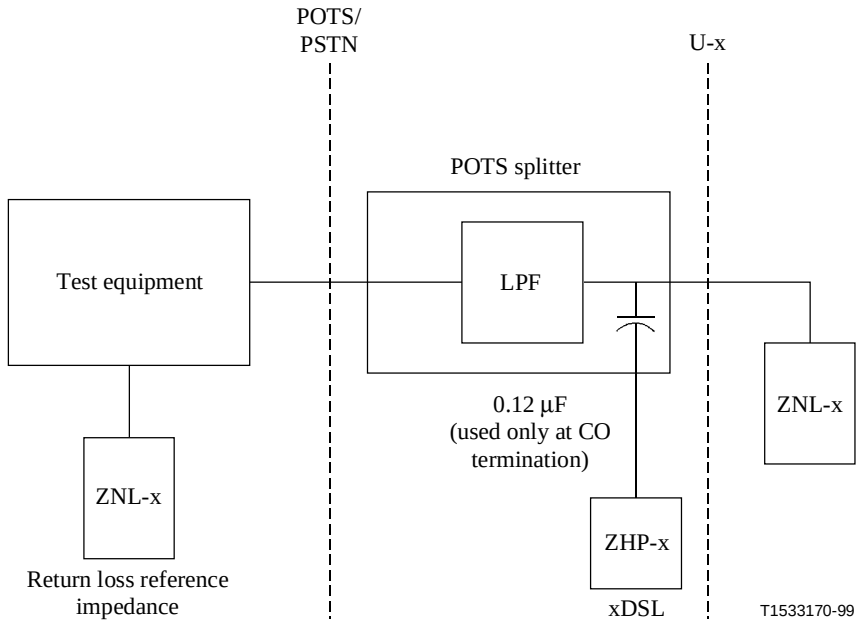

ZNL-c = 150 Ω + (830 Ω // 72 nF)
ZNL-r = 150 Ω + (72 nF // (830 Ω + 1 µF)
ZHP-c = the impedance presented to the POTS connection by an ATU-C through the capacitance of the POTS splitter DC blocking capacitors
ZHP-r = the impedance presented to the POTS connection by an ATU-R

NOTE – The DC blocking capacitors are only for the external CO POTS splitter without the HPF function. The ZNL-c and ZNL-r are valid only for voiceband frequencies.

Figure E.23/G.992.1 – Impedance measurements in the voiceband for the CO and R POTS splitters

E.4.3.1.5 Distortion caused by harmonics

The distortion contributed by the low-pass filter shall be measured using the test configurations in Figures E.20 and E.21, and the null loop.

With an applied tone set as per the latest North American measurement practices, then, at a level of –9 dBm, the second and third order intermodulation distortion products shall be at least 57 dB and 60 dB, respectively, below the received signal level.

E.4.3.1.6 Longitudinal balance

The longitudinal balance of the POTS splitter shall be greater than 58 dB for frequencies ranging from 0.2 to 3.4 kHz and a DC bias current of 50 mA will be applied.

See Figures E.24 and E.25.

IPR2025-00395
Petitioners' Exhibit 1011
Page 230 of 256

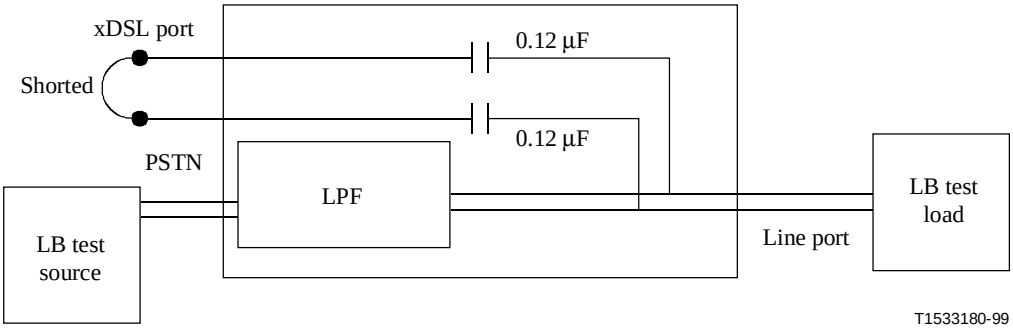

Figure E.24/G.992.1 – Longitudinal balance CO test setup

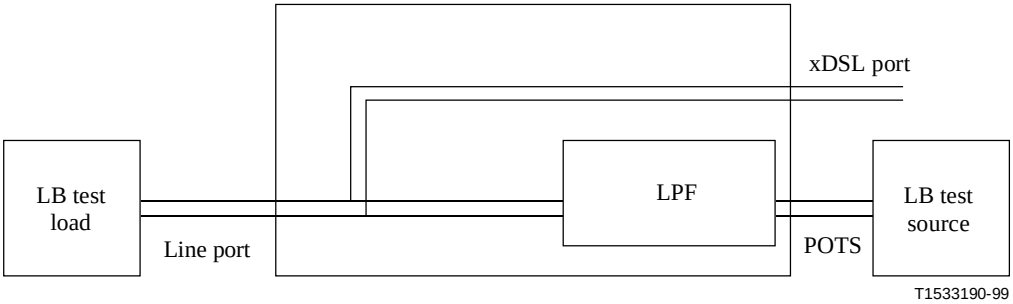

Figure E.25/G.992.1 – Longitudinal balance remote test setup

E.4.3.2 Out Band

The band between the voiceband and ADSL band is defined as the out band in E.4. In Japan, the out band is used with pulse metering (16 kHz), OVS signals (7.8 kHz), and OFFTALK services (0-7.0 kHz). These specifications and measurement methods of the Out Band require further study.

E.4.3.3 ADSL Band

This subclause describes the AC characteristics in the ADSL band.

E.4.3.3.1 ADSL Band Attenuation

The attenuation in the stop band of the low-pass filter (i.e. the difference in attenuation measured with and without the low-pass filter), shown in Figures E.26 and E.27, shall be greater than 65 dB for frequencies ranging from 25 kHz to 300 kHz and 55 dB for frequencies ranging from 300 kHz to 1104 kHz with an input level of 10 dBm.

IPR2025-00395
Petitioners' Exhibit 1011
Page 231 of 256

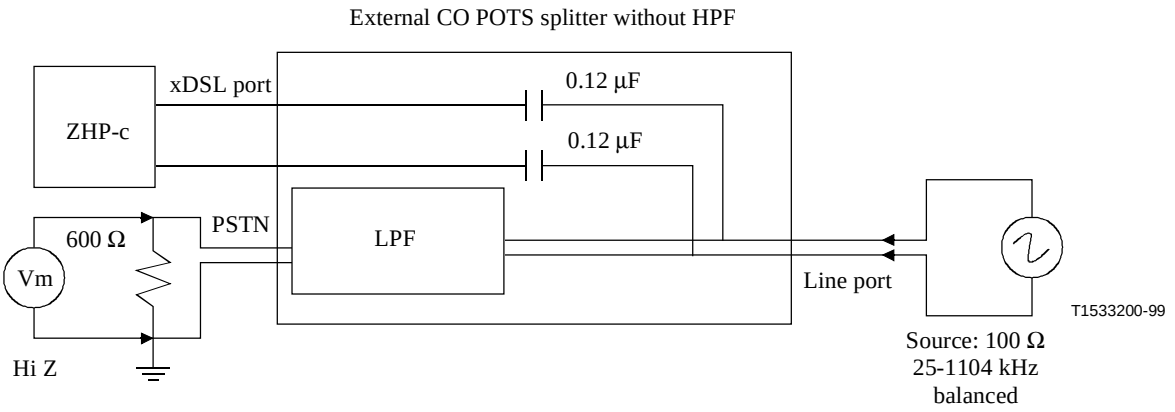

Figure E.26/G.992.1 – Measurement of the CO POTS splitter attenuation in the ADSL band

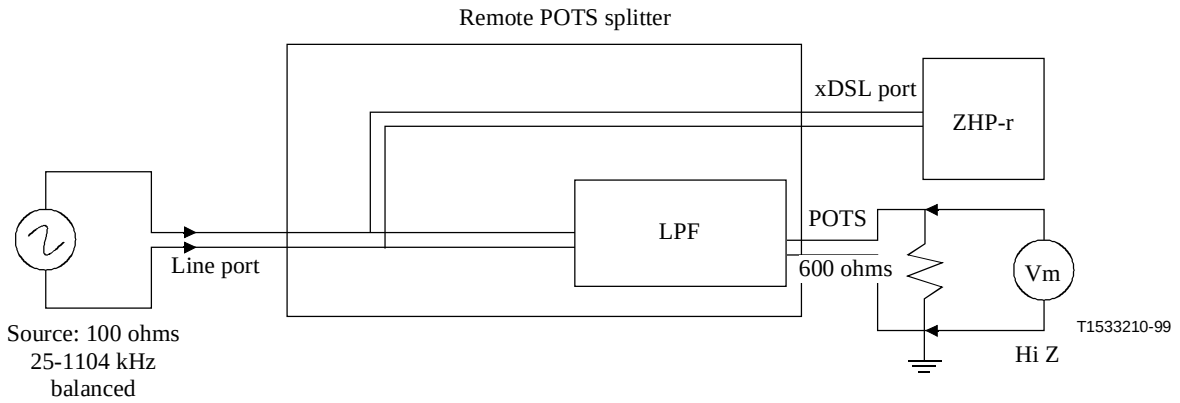

Figure E.27/G.992.1 – Measurement of the R POTS splitter attenuation in the ADSL band

E.4.3.3.2 Input Impedance

The insertion loss caused by the low-pass filter in the band from 25 kHz to 1104 kHz between nominal impedances with an input level of –10 dBm, as shown in Figures E.28 and E.29, shall be less than 0.35 dB.

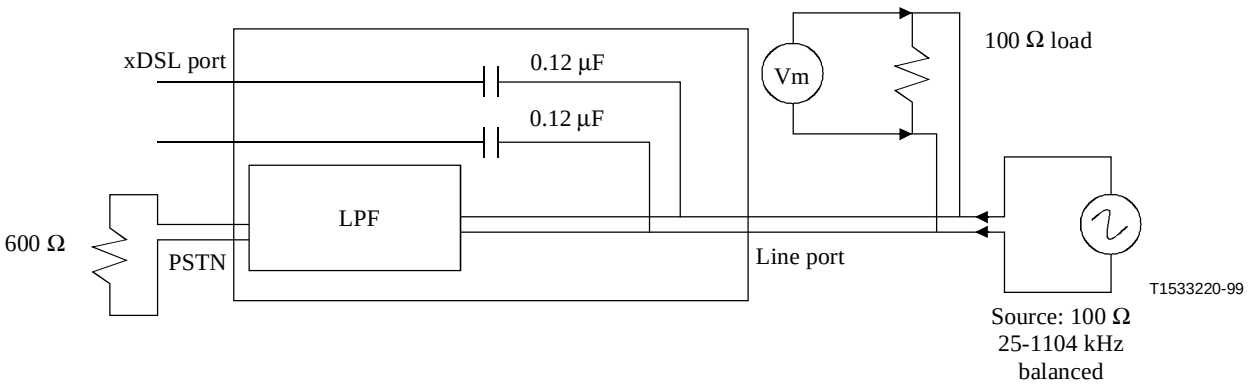

Figure E.28/G.992.1 – Measurement of loading effect of the CO POTS splitter in the ADSL band

IPR2025-00395
Petitioners' Exhibit 1011
Page 232 of 256

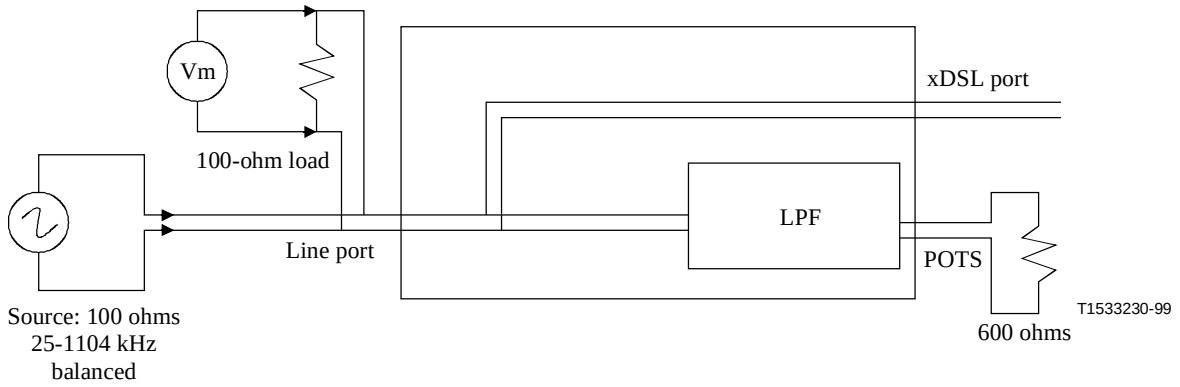

Figure E.29/G.992.1 – Measurement of loading effect of the R POTS splitter in the ADSL band

ANNEX F

ATU-x Classification and Performance for Region A (North America)

F.1 Classification definitions

The ATU-x capability requirements for category I (basic) and category II (optional) shall be as specified in Table F.1. All types of equipment shall interwork with at least category I performance and shall support the characteristics of a category I ATU as defined in Table F.1. All category II equipment shall interwork with category II performance and shall support the characteristics of a category II ATU as defined in Table F.1.

Table F.1/G.992.1 – ATU-x classification by category

Characteristics	Category I (basic)	Category II (optional)
Trellis option	Off	On
Spectrum	Non-overlapping spectrum	Overlapping spectrum

F.2 Performance requirements

ADSL transmission is assessed in terms of performance against an objective of coverage over test loops (see Recommendation G.996.1) and in the presence of defined noise models (see Recommendation G.996.1).

The ADSL control channel and other duplex channels are evaluated with all test loops.

The specific combinations of loops (see Recommendation G.996.1) and rates shown in Table F.2 shall be tested for either category I or category II ATUs, as indicated.

IPR2025-00395
Petitioners' Exhibit 1011
Page 233 of 256

Table F.2/G.992.1 – Loop sets and maximum rates for category I and II testing

Loop sets	ATU Category	Net data rate (kbit/s)			
		STM only		ATM and STM	
		Simplex (AS0)	Duplex (LS0)	Downstream (AS0)	Upstream (LS0)
T #7, T #13	I	1536	16	1696	160
		1536	160		
C #4, C #6, C #7, Mid-C	I	5920	224	6144	224
T #7, T #9, T #13	II	1536	16	1696	160
		1536	160		
C #4, C #6, C #8, Mid-C	II	5504	640	6144	640
NOTE – The channelization shall be tested with full overhead framing as defined in 7.4.1.2 and 8.4.1.2.					

F.2.1 Crosstalk interference

Tables F.3 and F.4 show the combinations of test loops and numbers of interferers to be tested for category I ATU's, downstream and upstream respectively. Tables F.5 and F.6 show the combinations of test loops and numbers of interferers to be tested for category II ATU's, downstream and upstream respectively. Net data rates to be tested and the allocation to bearer channels shall be as defined in Table F.2.

For the crosstalk interference test, the S and D parameters shall be configured such that the single payload transfer delay of 4 + (S – 1)/4 + SD/4 ms is less than 12 ms.

Table F.3/G.992.1 – Crosstalk tests for category I (downstream)

Test loops (see G.996.1)	Margin (dB)	Crosstalk (see G.996.1) (Note)			
		ADSL upstream NEXT and ADSL downstream FEXT	HDSL NEXT	DSL NEXT	T1 NEXT adj. binder
T #7, T #13	6	–	–	24	–
C #4	6	24	–	24	–
C #6	6	–	20	–	–
C #7	6	10	–	10	–
Mid-C	3	–	–	–	10
NOTE – The indicated interferers for each test are summed together with AWGN with PSD of –140 dBm/Hz to form a composite power spectral density.					

IPR2025-00395
Petitioners' Exhibit 1011
Page 234 of 256

Table F.4/G.992.1 – Crosstalk tests for category I (upstream)

Test loops (see G.996.1)	Margin (dB)	Crosstalk (see G.996.1) (Note)			
		ADSL downstream NEXT and ADSL upstream FEXT	HDSL NEXT	DSL NEXT	T1 NEXT adj. binder
T #7, T #13	6	–	–	24	–
C #4	6	24	–	24	–
C #6	6	–	20	–	–
C #7	6	10	–	10	–
Mid-C	3	–	–	–	10
NOTE – The indicated interferers for each test are summed together with AWGN with PSD of −140 dBm/Hz to form a composite power spectral density.					

Table F.5/G.992.1 – Crosstalk tests for category II (downstream)

Test loops (see G.996.1)	Margin (dB)	Crosstalk (see G.996.1) (Note)			
		ADSL upstream NEXT and ADSL downstream FEXT	HDSL NEXT	DSL NEXT	T1 NEXT from adj. binder
T #7, T #9, T #13	6	–	–	24	–
C #4, C #6, C #8	6	10	10	24	–
Mid-C	6	–	–	10	24
NOTE – The indicated interferers for each test are summed together with AWGN with PSD of −140 dBm/Hz to form a composite power spectral density.					

Table F.6/G.992.1 – Crosstalk tests for category II (upstream)

Test loops	Margin (dB)	Crosstalk (Note)			
		ADSL downstream NEXT and ADSL upstream FEXT	HDSL NEXT	DSL NEXT	T1 NEXT from adj. binder
T #7, T #9, T #13	6	–	–	24	–
C #4, C #6, C #8	6	10	10	24	–
Mid-C	6	–	–	10	24
NOTE – The indicated interferers for each test are summed together with AWGN with PSD of −140 dBm/Hz to form a composite power spectral density.					

F.2.2 Impulse noise

Tables F.7 and F.8 show the combinations of test loops, interferers, and data rates to be tested. Net data rates to be tested and the allocation to bearer channels shall be as defined in Table F.2. The type of crosstalk interference applicable for each test is taken from the corresponding test in Tables F.3, F.4, F.5, or F.6. The total power of the applied interference is fixed at 4 dB below the reference level.

IPR2025-00395
Petitioners' Exhibit 1011
Page 235 of 256

Table F.7/G.992.1 – Test loops, interferers, and data rates for impulse tests for category I

Test Loops (see G.996.1)	Interferers (see G.996.1)		
	Impulse 1	Impulse 2	crosstalk (see Note)
T #7, T #13	Yes	yes	yes
C #4, C #6, C #7	Yes	yes	yes
Mid-C 1829 m (6 kft)	Yes	yes	yes
NOTE – The indicated interferers for each test are summed together with AWGN with PSD of −140 dBm/Hz to form a composite power spectral density.			

Table F.8/G.992.1 – Test loops, interferers, and data rates for impulse tests for category II

Test Loops (see G.996.1)	Interferers (see G.996.1)		
	Impulse 1	Impulse 2	crosstalk (see Note)
T #7, T #9, T #13	yes	yes	yes
C #4, C #6, C #8	yes	yes	yes
Mid-C 1829 m (6 kft)	yes	yes	yes
NOTE – The indicated interferers for each test are summed together with AWGN with PSD of −140 dBm/Hz to form a composite power spectral density.			

F.2.3 POTS

Tables F.9 and F.10 show the combinations of test loops, interferers, and data rates to be tested for categories I and II. The type of crosstalk interference applicable for each test is taken from the corresponding test in Tables F.3, F.4, F.5, or F.6. The total power of the applied interference is fixed at 4 dB below the reference or 0 dB margin level.

Bit error requirements related to the POTS interference test are for further study.

Table F.9/G.992.1 – Test loops, interferers, and data rates for POTS tests category I

Test loop (see G.996.1)	Interferers (see G.996.1)	
	POTS signalling	Crosstalk (see Note)
ANSI (7, 13)	yes	yes
CSA (4, 6, 7)	yes	yes
Mid-CSA loop	yes	yes
NOTE – The indicated interferers for each test are summed together with AWGN with PSD of −140 dBm/Hz to form a composite power spectral density.		

IPR2025-00395
Petitioners' Exhibit 1011
Page 236 of 256

Table F.10/G.992.1 – Test loops, interferers, and data rates for POTS tests category II

Test loop (see G.996.1)	Interferers (see G.996.1)	
	POTS signalling	Crosstalk (see Note)
ANSI (7, 9, 13)	yes	yes
CSA (4, 6, 8)	yes	yes
CSA (6)	yes	yes
Mid-CSA loop	yes	yes
NOTE – The indicated interferers for each test are summed together with AWGN with PSD of –140 dBm/Hz to form a composite power spectral density.		

ANNEX G

ATU-x Classification and Performance for Region B (Europe)

G.1 Performance requirements

ADSL transmission is assessed in terms of performance against an objective of coverage over test loops (see Recommendation G.996.1) and in the presence of defined noise models (see Recommendation G.996.1).

The following conditions apply:

- BER < 10^{-7} with 6 dB margin.
- Annex A (operation over POTS with a splitter).
- Interleaved mode of operation is allowed.
- Trellis option is not enabled.

Table G.1 applies where both ATU-C and ATU-R are of a non-overlapped spectrum type using PSD Mask for reduced NEXT defined in A.1.3.

Table G.2 applies where both ATU-C and ATU-R are of an overlapped spectrum type using PSD Mask defined in A.1.2.

Table G.1 applies where one ATU-x is a non-overlapped spectrum type and one ATU-x is an overlapped spectrum type. In this case the overlapped spectrum ATU-x does not need to comply with the PSD Mask for reduced NEXT defined in A.1.3.

For the crosstalk interference test, the S and D parameters shall be configured such that the single payload transfer delay of 4 + (S – 1)/4 + SD/4 ms is less than 12 ms.

IPR2025-00395
Petitioners' Exhibit 1011
Page 237 of 256

Table G.1/G.992.1 – Test Loops & Performance Requirements

Loop (see G.996.1)	Loop Insertion Loss @ 300 kHz	Nominal length "X" (km)	Down Net Data Rate (kbit/s)	Up Net Data Rate (kbit/s)	Noise @ ATU-C	Noise @ ATU-R
ETSI-0	0 dB	0	6144	640	None	None
ETSI-1	40 dB	2.80	4096	320	Euro-K	ETSI-A
ETSI-1	50 dB	3.50	2048	128	Euro-K	ETSI-A
ETSI-1	20 dB	1.40	6144	640	ETSI-B	ETSI-B
ETSI-1	30 dB	2.15	2048	512	ETSI-B	ETSI-B
ETSI-1	60 dB	4.20	576	128	ETSI-A	ETSI-A
ETSI-1	60 dB	4.20	1536	512	AWGN -140	AWGN -140

Table G.2/G.992.1 – Test Loops & Performance Requirements

Loop (see G.996.1)	Loop Insertion Loss @ 300 kHz	Nominal length "X" (km)	Down Net Data Rate (kbit/s)	Up Net Data Rate (kbit/s)	Noise @ ATU-C	Noise @ ATU-R
ETSI-0	0 dB	0	6144	640	None	None
ETSI-1	40 dB	2.80	4096	320	Euro-K	ETSI-A
ETSI-1	50 dB	3.50	2048	128	Euro-K	ETSI-A
ETSI-1	20 dB	1.40	6144	640	ETSI-B	ETSI-B
ETSI-1	30 dB	2.15	2048	512	ETSI-B	ETSI-B
ETSI-1	60 dB	4.20	576	128	ETSI-A	ETSI-A
ETSI-1	60 dB	4.20	1536	512	AWGN -140	AWGN -140

APPENDIX I

ATM Layer to Physical Layer Logical Interface

This appendix describes the logical interface between the ATM Layer and the Physical Layer. The Physical Layer (i.e. the ATU) consists of the Cell Specific Transmission Convergence Sublayer (Cell TC), the Mux/Sync Control block (ADSL framing) and the other physical layer functions (FEC and modulation), as shown in Figures 5-2 and 5-4.

The ATM layer to Physical Layer interface (named V-C at the ATU-C and named T-R at the ATU-R) are shown in Figure I.1. TxRef* is optional at ATU-C, RxRef* is optional at ATU-R.

IPR2025-00395
Petitioners' Exhibit 1011
Page 238 of 256

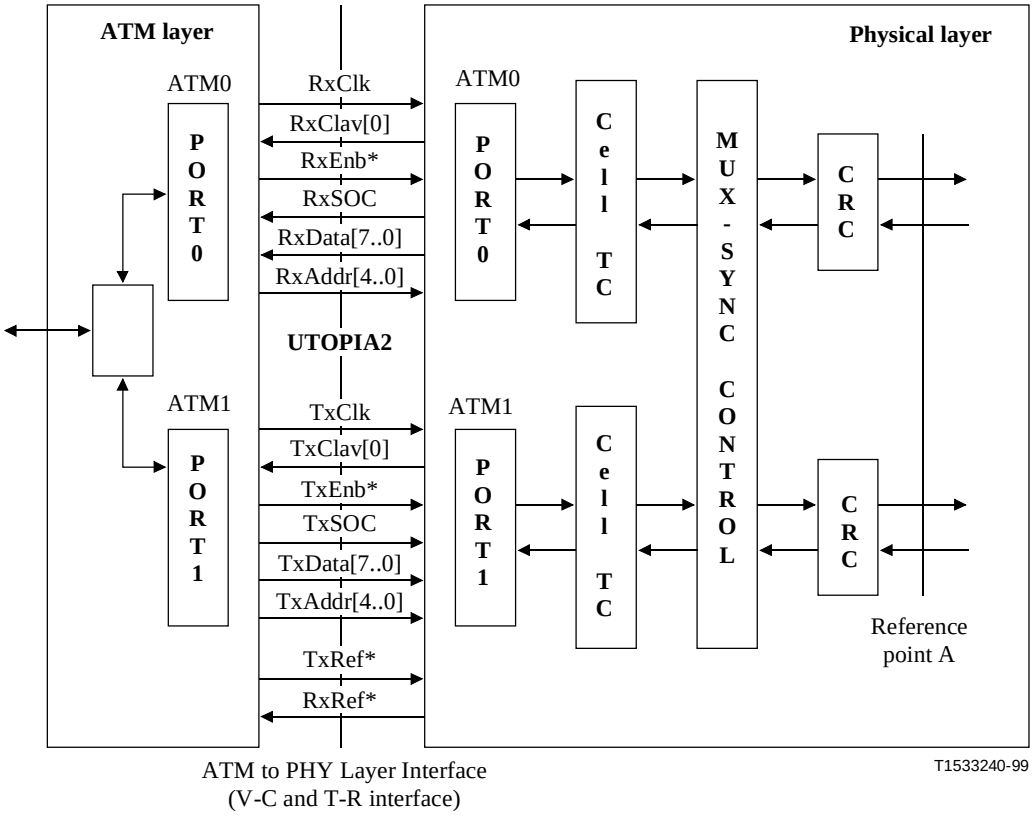

Figure I.1/G.992.1 – ATM to physical layer logical interface at ATU-C and ATU-R

The ATM Layer performs cell multiplexing from and demultiplexing to the appropriate physical port (i.e. latency path – fast or interleaved) based on the Virtual Path Identifier (VPI) and Virtual Connection Identifier (VCI), both contained in the ATM cell header. Configuration of the cell demultiplexing process is done by ATM Layer management.

A Cell Specific Transmission Convergence sublayer (Cell TC) is provided for each latency path separately. Cell TC functionalities are specified in 7.2.3.

The logical input and output interfaces at the V-C reference point for ATM transport is based on the UTOPIA Level 2 interface with cell level handshake. The logical interface is given in Tables I.1 and I.2 and shown in Figure I.1. When a flow control flag is activated by the ATU-C (i.e. the ATU-C wants to transmit or receive a cell), the ATM layer initiates a cell Tx or cell Rx cycle (53 byte transfer). The ATU-x should support transfer of a complete cell within 53 consecutive clock cycles. The UTOPIA Tx and Rx clocks are mastered from the ATM layer. The same logical input and output interfaces based on the UTOPIA Level 2 interface can be used at the T-R reference point in the ATU-R.

IPR2025-00395
Petitioners' Exhibit 1011
Page 239 of 256

Table I.1/G.992.1 – UTOPIA Level 2 ATM Interface Signals for Tx

Signal Name	Direction	Description
Transmit Interface		
TxClk	ATM to PHY	Timing signal for transfer
TxClav[0]	PHY to ATM	Asserted to indicate that the PHY Layer has buffer space available to receive a cell from the ATM Layer (de-asserted 4 cycles before the end of the cell transfer)
TxEnb*	ATM to PHY	Asserted to indicate that the PHY Layer must sample and accept data during the current clock cycle
TxSOC	ATM to PHY	Identifies the cell boundary on TxData
TxData[7..0]	ATM to PHY	ATM Cell Data transfer (8-bit mode)
TxAddr[4..0]	ATM to PHY	PHY device address to select the device that will be active or polled for TxClav status
TxRef*	ATM to PHY	Network Timing Reference (8 kHz timing signal) (only at V-C interface)

Table I.2/G.992.1 – UTOPIA Level 2 ATM Interface Signals for Rx

Signal Name	Direction	Description
Receive Interface		
RxClk	ATM to PHY	Timing signal for transfer
RxClav[0]	PHY to ATM	Asserted to indicate to the ATM Layer that the PHY Layer has a cell ready for transfer to the ATM Layer (de-asserted at the end of the cell transfer)
RxEnb*	ATM to PHY	Asserted to indicate that the ATM Layer will sample and accept data during the next clock cycle
RxSOC	PHY to ATM	Identifies the cell boundary on RxData
RxData[7..0]	PHY to ATM	ATM Cell Data transfer (8-bit mode)
RxAddr[4..0]	ATM to PHY	PHY device address to select the device that will be active or polled for RxClav status
RxRef*	PHY to ATM	Network Timing Reference (8 kHz timing signal) (only at T-R interface)

More details on the UTOPIA Level 2 interface can be found in the ATM Forum Specification, af.phy-0039.000, published in June 1995.

APPENDIX II

Dynamic (on-line) Rate Adaptation

II.1 Introduction

The Rate Adaptation at Start-up procedure (see 10.8 and 10.9) optimizes the modem settings for the existing channel conditions and service requirements. Channel conditions and service requirements may, however, change over time. In order to avoid a lengthy restart to reconfigure the modem, a mechanism that allows reconfiguration of the modem during Showtime is proposed. This mechanism is referred to as Dynamic Rate Adaptation (DRA).

This appendix describes an AOC-based DRA mechanism. The purpose of this DRA mechanism is

IPR2025-00395
Petitioners' Exhibit 1011
Page 240 of 256

not to provide "on-the-fly" Rate Adaptation, where the modem configuration would change continuously, tracking the slightest variation of the line conditions without affecting the user-traffic, but rather to allow for occasional changes, which would involve service interruption of the order of tens of milliseconds.

This DRA procedure should be augmented by a non-AOC-based fast Warm Restart procedure for the case where the AOC channel becomes unreliable. The specification of this Warm Restart procedure however is for further study.

II.1.1 General concepts

The proposed DRA mechanism is a mechanism that during ShowTime, without the need to restart:

- Allows rate modifications (up and downgrades) for both US and DS.

  NOTE – Rate modification implies more than just bit-rate but also FEC and Interleaving settings.
- Allows rate repartitionings between the fast and the interleaved paths.
- Provides an AOC-based protocol that prior to the actual swap of the modem configuration runs without interfering with the user-traffic.
- Allows the ATU-C to gather information or metrics about operational conditions.
- Follows the same philosophy as RA during Start-up.

It should be noted, however, that the DRA mechanism does not:

- Provide an on-the-fly rate adaptation solution, where the modem configuration would track the slightest variation of the line conditions without affecting the user-traffic.
- Specify the policy that describes – based on the gathered metrics and/or additional information – when or how to reconfigure the modem settings. Furthermore, the DRA mechanism assumes that the policy resides within the network and not within customer equipment.
- Require the actual reconfiguration to occur error-free. During the transition period, user-data may be lost during tens of milliseconds for both communication directions.

II.2 DRA protocol and messages

II.2.1 DRA concept

The DRA protocol expands the AOC message set by defining new DRA-AOC messages. The purpose of these new messages is to:

1) allow the ATU-C to gather detailed information about the line conditions (*monitoring*);
2) propose to the ATU-R a new rate configuration – if needed – (*configuration*);
3) exchange configuration information – if the proposal is accepted by ATU-R (*exchange*);
4) initiate and synchronize a swap to the new rate configuration (*swap*).

The next paragraphs highlight how each of these functions is implemented through AOC messages.

The maximum length of the new AOC-messages is limited to 13 bytes, this being the maximum length of an AOC message.

Just like AOC-messages, DRA-AOC messages shall be transmitted 5 times for protection against transmission errors. For concatenated messages composed of multiple 13-byte messages, each 13-byte message shall be sent 5 times consecutively, before the next 13-byte message is sent 5 times consecutively.

II.2.2 DRA-AOC messages

Table II.1 lists the new DRA-AOC command set.

IPR2025-00395
Petitioners' Exhibit 1011
Page 241 of 256

Table II.1/G.992.1 – DRA Command Set

Header	Command	Length (bytes)	Message	Source
DF_{16}	00_{16}	7	DRA_Monitor_Request	ATU-C
DF_{16}	20_{16}	13	DRA_Monitor_Reply	ATU-R
DF_{16}	40_{16} ... 42_{16}	3 × 13	DRA_Configuration_Request	ATU-C
DF_{16}	60_{16}	4	DRA_Configuration_Reply	ATU-R
DF_{16}	80_{16} ... $9F_{16}$	4 × 13	DRA_Exchange_Request	ATU-C/ATU-R
DF_{16}	$A0_{16}$	4	DRA_Exchange_Reply	ATU-R/ATU-C
DF_{16}	$C0_{16}$	8	DRA_Swap_Request	ATU-C
DF_{16}	$E0_{16}$	8	DRA_Swap_Reply	ATU-R
DF_{16}	Other		*Reserved*	
NOTE – Reserved bits or fields shall be encoded as 0.				

II.3 Monitoring

The ATU-C monitors the changing line conditions. Through the EOC, the SNR margin and the line attenuation from the DS can be retrieved. However, more information may be required in order to decide whether or not a new configuration should be proposed, and if so what the new proposal should be. In order to allow the ATU-C to gather more information about the DS, two new AOC messages are defined.

NOTE – The ATU-C already monitors the US thus no US-related information needs to be exchanged.

II.3.1 DRA_Monitor_Request

DRA_Monitor_Request is generated by the ATU-C; its format is given in Table II.2.

Table II.2/G.992.1 – DRA Monitor Request

Message Format	Bits	Definition
DRA_Monitor_Request {		
Header	8	DF_{16}
Command	8	00_{16}
Reserved	3	
Req_SNR_Margin	5	Required SNR Margin to be used for the *Bmax* that will be calculated by the ATU-R and returned within *DRA_Monitor_Reply* message. Unsigned value in dB. Allowed values ranging from 0 to 15 dB.
Reserved	32	
}		

II.3.2 DRA_Monitor_Reply

The ATU-R may also send this message unsolicited, whenever considered necessary: e.g. when line conditions change significantly and endanger proper operation of the modem and in particular the AOC channel. However, in order to avoid these messages to monopolize the AOC channel, after sending an unsolicited DRA_Monitor_Reply, the ATU-R shall not send another one before having

IPR2025-00395
Petitioners' Exhibit 1011
Page 242 of 256

received a DRA_Monitor_Request from the ATU-C.

The format of this DRA-AOC message is shown in Table II.3.

Table II.3/G.992.1 – DRA-AOC message format

Message Format	Bits	Definition
DRA_Monitor_Reply {		
Header	8	DF_{16}
Command	8	20_{16}
Attenuation	6	See R-MSG-RA (*current value*)
Req_SNR_Margin	5	Requested SNR margin [*used in Bmax calculation, see below*]. Same format as **Req_SNR_Margin** in *DRA_Monitor_Request*.
Noise_Margin	5	See R-MSG-RA (*current value*)
Coding_Gain	4	See R-MSG-RA (*used in Bmax calculation*)
Bmax	12	See R-MSG-RA (*see below*)
RS_Payload	9	See R-MSG-RA (*used in Bmax calculation*)
RS_Overhead	7	See R-MSG-RA (*used in Bmax calculation*)
Nr_of_Tones	8	See R-MSG-RA (*used in Bmax calculation*)
Reserved	32	
}		

Attenuation and Noise Margin are updated values based on the current modem conditions.

Bmax indicates the maximum number of bits that can be carried per DMT symbol assuming a single latency and the Coding_Gain, RS_Payload, RS_Overhead and Nr_of_Tones values listed. The same definitions as during RA at Start-Up apply.

The Required SNR margin used for the derivation of Bmax coincides:

- in the case of an autonomous *DRA_Monitor_Reply*, with the Required SNR Margin that was used during the configuration of the current, active configuration;
- in the case of a response to a *DRA_Monitor_Request*, with the Req_SNR_Margin listed in *DRA_Monitor_Request*.

II.4 Configuration

Based on the gathered metrics and/or additional information, a network entity aware of the DRA policy may detect that the conditions are met, and modify the modem configuration. Two new AOC messages are defined to allow the ATU-C to propose one new configuration to the ATU-R for the DS.

NOTE – No need for US information exchange at this stage.

II.4.1 DRA_Configuration_Request

DRA_Configuration_Request is a concatenated message sent by the ATU-C. It consists of three 13-byte messages. The format of the messages is shown in Table II.4 (each field is one byte long). The definition of the messages is shown in Table II.5.

IPR2025-00395
Petitioners' Exhibit 1011
Page 243 of 256

Table II.4/G.992.1 – DRA Configuration Request format

HDR DF_{16}	COM 42_{16}	*RSM*	BFd	BFd	BFd	BFd	0xF	BFd	BFd	BFu	BFu	BFu

HDR DF_{16}	COM 41_{16}	*RES*	BId	BId	Bid	RES	BId	BId	BId	BIu	BIu	BIu

HDR D_{16}	COM 40_{16}	*RES*	RFd	RId	Sd	Id	*RES*	RFd	RId	Sd	Id	*RES*

Table II.5/G.992.1 – DRA Configuration Request messages

Message Fields	Definition
RSM	Required SNR Margin to be used for the evaluation of this configuration. Value in dB. The allowed values range from 0 to 15 dB (4 bits).
Bfd, Bfu, Bid, Biu, Rfd, Rid, Rfu, Riu, Sd, Su, Id, Iu	Same definitions and ordering as in C-Rates-RA apply
RES	Reserved bytes coded as FF_{16}

II.4.2 DRA_Configuration_Reply

This message shall be sent by the ATU-R in response to *DRA_Configuration_Request* from the ATU-C. The format and definition of the message are shown in Tables II.6 and II.7.

Table II.6/G.992.1 – DRA Configuration Reply format

HDR DF_{16}	COM 60_{16}	STA	DAT

IPR2025-00395
Petitioners' Exhibit 1011
Page 244 of 256

Table II.7/G.992.1 – DRA Configuration Reply messages

Message Format	Bits	Definition
DRA_Configuration_Reply {		
Header	8	DF_{16}
Command	8	60_{16}
Status (STA)	8	00_{16}: *Reserved* 01_{16}: ACK: New configuration accepted 02_{16}: Retransmit: resend all *DRA_Configuration_Request* messages 03_{16}: Option Fail: proposed option rejected 04_{16}-FF_{16}: *Reserved*
Data (DAT)	8	if STA=ACK: Noise margin for this configuration as in R-MSG2 if STA=RETRANSMIT: 00_{16} if STA=OPTION_FAIL: 00_{16}: General Failure Code 01_{16}-$1F_{16}$: *Reserved* for Specific Failure Codes
}		

II.5 Exchange

Once both sides agree on the new configuration, both sides must be informed about which Bi and Gi to use on each tone. This is done in this third phase.

For this purpose two additional DRA-AOC messages are defined: *DRA_Exchange_Request* and its reply *DRA_Exchange_Reply*.

Unlike the previous DRA messages, the messages are used in both the downstream and upstream direction. For the Downstream the ATU-R is generating the *DRA_Exchange_Request* and the ATU-C answers with a *DRA_Exchange_Reply*. For the upstream the ATU-C generates the *DRA_Exchange_Request* and the ATU-R answers with *DRA_Exchange_Reply*.

II.5.1 DRA_Exchange_Request

DRA_Exchange_Request is a concatenated message sent by the ATU-C. It consists of four 13-byte messages.

This message is used to communicate the modified Bi and Gi of the respective communication direction. Because one set of four 13-byte messages may be insufficient to communicate all the modified values, a set of messages may be repeated for a new set of tones until all the new settings have been exchanged successfully.

The format and definition of *DRA_Exchange_Request* are given in Tables II.8 and II.9. The 13-byte message consists of three bytes followed by eight 10-bit fields. Each of these 10-bit fields encodes the Bi&Gi value of one tone.

Table II.8/G.992.1 – DRA_Exchange_Request format

HDR DF_{16}	COM	Ti	B&G (Ti*8)	B&G (Ti*8+1)	B&G (Ti*8+2)	111	B&G (Ti*8+4)	B&G (Ti*8+5)	B&G (Ti*8+6)	B&G (Ti*8+7)

IPR2025-00395
Petitioners' Exhibit 1011
Page 245 of 256

For the upstream only one block of four 13-byte messages is needed. For the downstream a maximum of 8 blocks of four 13-byte messages are needed.

The COM values of consecutive *DRA_Exhange_Request* messages are ordered as follows:

– the COM values decrease by one for each consecutive message (assuming no retransmission is needed);

– the COM value of the last *DRA_Exchange_Request* message shall be 80_{16}.

For the upstream direction this means that 4 COM values that shall be used are –in order– 83_{16}, 82_{16}, 81_{16} and 80_{16}.

For the downstream direction the first COM value depends on how many blocks of four 13-byte messages are needed. In the case that the maximum of 8 blocks (256 tones) are needed, the consecutive COM-values shall be $9F_{16}$, $9E_{16}$ .... 83_{16}, 82_{16}, 81_{16} and 80_{16}. If for example only 7 blocks (224 tones) are needed, then the first COM value shall be $9B_{16}$.

A new block of 4 DRA_Exchange_Request messages is allowed to be sent out only after the previous block of 4 messages has successfully been acknowledged (see *DRA_Exchange_Reply*).

Table II.9/G.992.1 – DRA Exchange Request messages

Message Format	Bits	Definition
DRA_Exchange_Request {		
Header	8	DF_{16}
Command	8	$9F_{16}$ ... 80_{16} (Downstream) 83_{16} ... 80_{16} (Upstream)
Tone Segment (Ti)	5	Tone segment (0-31)
Bi&Gi (B&G)	8 × 10	Bi and Gi values of 8 subsequent tones, starting from tone Ti. **Bi** 4 bits new Bi-value encoded as integer **Gi** 6 bits new Gi value: 00_{16}: No Power 01_{16}-$3F_{16}$: –3.875 dB to 3.875 dB in steps of 0.125 dB Notice that |Gi| must be ≤2.5 dB in order to be valid.
}		

II.5.2 DRA_Exchange_Reply

This message shall be sent in response to a *DRA_Exchange_Request* message; its format and message definition are shown in Tables II.10 and II.11.

Table II.10/G.992.1 – DRA_Exchange_Reply format

HDR	COM	STA	DAT
DF_{16}	$A0_{16}$		

IPR2025-00395
Petitioners' Exhibit 1011
Page 246 of 256

Table II.11/G.992.1 – DRA_Exchange_Reply messages

Message Format	Bits	Definition
DRA_Exchange_Reply {		
Header	8	DF_{16}
Command	8	$A0_{16}$
Status (STA)	8	00_{16}: *Reserved* 01_{16}: ACK: New Bi-Gi configuration accepted 02_{16}: Retransmit: resend last set of 4 DRA_Exchange_Request messages 03_{16}: Option Fail: proposed option rejected 04_{16}-FF_{16}: *Reserved*
Data (DAT)	8	if STA=ACK: COM value of the last 13-byte message of the block of 4 that is being acknowledged. if STA=RETRANSMIT: COM value of the last 13-byte message of the block of 4 that must be retransmitted. if STA=OPTION_FAIL: 00_{16} General Failure Code 01_{16}-$1F_{16}$ reserved for Specific Failure Codes
}		
NOTE – Upstream always 80_{16}.		

II.6 Swap

Once the modems have agreed on the appropriate settings for the new configuration, the swap to the new configuration must be activated and synchronized. A swap always refers to the most recently agreed and successfully exchanged rate configuration settings.

Two new messages are defined: *DRA_Swap_Request* and *DRA_Swap_Reply*. *DRA_Swap_Request* will be sent by the ATU-C to inform the ATU-R about when to swap the rate. The ATU-R will acknowledge this request through the use of *DRA_Swap_Reply*.

During the transition from one rate configuration to another, tones may be sent with the wrong Bi and Gi. This also applies to Synch symbols. Synch symbols may be corrupted. The pilot tone however must be maintained in order to allow frame and superframe detection. The transition time where the Bi and Gi may be corrupted is quantified prior to the actual rate swap through the use of two sets of parameters:

1) A SuperFrame Reference Number (*SFR*) to identify around which superframe boundary the rate swap will occur. Valid values of *SFR* are:

   $SFR = 4 \times N - 1$ where N is an integer number.

   If the modems operate with the mandatory *S*-values, these *SFR*-references always coincide with codeword boundaries. This avoids an explicit Reset of the FEC-mechanism. However if a different *S*-value is used then a reset is mandatory.

   Notice that *SFR* equals zero at the first ShowTime symbol and is then increased by one (modulo 256) at each consecutive superframe. The definition of *SFR* is identical to the definition used for synchronizing a Bit-Swap operation.

   By analogy with the bit-swap specification, the SFR value shall at least exceed by 47 the superframe counter value that coincides with when the *DRA_Swap_Request* message is sent out.

IPR2025-00395
Petitioners' Exhibit 1011
Page 247 of 256

2) A second set of parameters will indicate how many symbols before and after the reference superframe boundary:

- the transmitter for the respective communication direction can send wrong constellation sizes and gains, therefore corrupting data;
- the receiver of the respective communication direction may not be able to recover the correct data. This value is not supposed to affect the speed at which the DRA swap is executed by the transmitter, but it allows to quantify the loss of data during a DRA.

In total 8 duration values (e's) shall be exchanged. The e-values indicate the capability of the ATU's to adjust, fast or slow, to a change in Bi/Gi and FEC settings. Four e-values are sent out by the ATU-C to the ATU-R within the *DRA_Swap_Request* message. These are:

1) *Eps_DS_TX_neg*
2) *Eps_DS_TX_pos*
3) *Eps_US_RX_neg*
4) *Eps_RX_RX_pos*

The ATU-R in *DRA_Swap_Reply* shall send 4 analogous e-parameters:

5) *Eps_US_TX_neg*
6) *Eps_US_TX_pos*
7) *Eps_DS_RX_neg*
8) *Eps_DX_RX_pos*

The syntax of these fields relies on the following rules:

- "DS/US" refers to the communication direction.
- "TX/RX" refers to whether the e-value refers to the transmitting or receiving function.
- "neg/pos" refers to whether the e-parameter identifies respectively the beginning – expressed in how many frames before the SFR reference – or the end – expressed in how many symbols after the SFR reference – of the timespan in which the data may be corrupted.

Each ATU-x only indicates the e's that apply to its side. There is no negotiation process of e's involved.

Each e-value is positive and encoded in one byte as an unsigned value indicating a duration ranging from 0 to 255 frames.

- The maximum number of corrupted symbols (CS) for the downstream direction (incl. receiver) can be quantified as:

$$CS_{DS} = \max(Eps_DS_TX_neg, EPS_DS_RX_neg) + \max(EPS_DS_TX_pos, EPS_DS_RX_pos)$$

- The maximum number of corrupted symbols for the upstream direction (incl. receiver) can be quantified as:

$$CS_{US} = \max(Eps_US_TX_neg, EPS_US_RX_neg) + \max(Eps_US_TX_pos, EPS_US_RX_pos)$$

IPR2025-00395
Petitioners' Exhibit 1011
Page 248 of 256

II.6.1 Example

Consider the situation shown in Figure II.1.

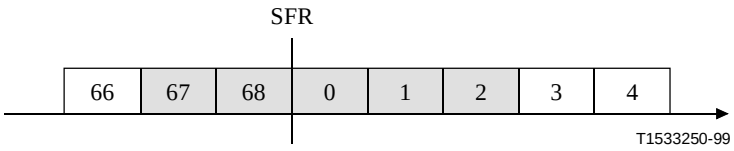

Figure II.1/G.992.1 – Corrupted frames transmitted by ATU-C

The grey zones represent the corrupted frames or DMT symbols that the ATU-C will transmit downstream during a DRA Swap. In this particular situation, *Eps_DS_TX_neg* is equal to 2 (two zones are grey before SFR), and *Eps_DS_TX_pos* is equal to 3 (three zones are grey after SFR).

If the ATU-R receiver capability to adapt to the new configuration is identified by an *Eps_DS_RX_neg* of 0, and an *Eps_DS_RX_pos* of 5 (see Figure II.2), then the maximum number of corrupted symbols is 7.

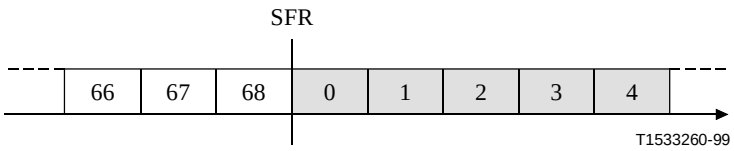

Figure II.2/G.992.1 – Frames corrupted by the ATU-R receiver

II.6.2 DRA_Swap_Request

This message is sent by the ATU-C; its format and message definition are shown in Tables II.12 and II.13.

Table II.12/G.992.1 – DRA Swap Request Format

HDR DF_{16}	COM $C0_{16}$	STA	DAT	EDTN	EDTP	EURN	EURP

IPR2025-00395
Petitioners' Exhibit 1011
Page 249 of 256

Table II.13/G.992.1 – DRA Swap Request messages

Message Format	Bits	Definition
DRA_Swap_Request {		
Header	8	DF_{16}
Command	8	$C0_{16}$
Status (STA)	8	00_{16}: *Reserved* 01_{16}: SWAP Request 02_{16}: SWAP Information Request (Note) 03_{16}-FF_{16}: reserved
Data (DAT)	8	if STA=SWAP: *SFR*. Notice that the two least significant bits must be encoded as 3_{16}. if STA≠SWAP: *Reserved*
Eps_DS_TX_neg (EDTN)	8	*See above*
Eps_DS_TX_pos (EDTP)	8	*See above*
Eps_US_RX_neg (EURN)	8	*See above*
Eps_US_RX_pos (EURP)	8	*See above*
}		
NOTE – Swap Information Request allows the ATU-C to retrieve the e's of the ATU-R and evaluate data loss without requesting a rate swap.		

II.6.3 DRA_Swap_Reply

This message is sent by the ATU-R as a reply to *DRA_Swap_Request*; its format and message definition are given in Tables II.14 and II.15.

Table II.14/G.992.1 – DRA Swap Reply Format

HDR DF_{16}	COM $E0_{16}$	STA	DAT	EUTN	EUTP	EDRN	EDRP

IPR2025-00395
Petitioners' Exhibit 1011
Page 250 of 256

Table II.15/G.992.1 – DRA Swap Reply messages

Message Format	Bits	Definition
DRA_Swap_Reply {		
Header	8	DF_{16}
Command	8	$E0_{16}$
Status (STA)	8	00_{16}: *Reserved*
		01_{16}: ACK SWAP
		02_{16}: NACK_SWAP
		03_{16}: ACK SWAP_INFO
		04_{16}: NACK SWAP_INFO
		Other: *Reserved*
Data (DAT)	8	if STA=ACK: same *SFR*-value as *DRA_Swap_Request*
		if STA≠ACK: *Reserved*
Eps_US_TX_neg (EUTN)	8	*See above*
Eps_US_TX_pos (EUTP)	8	*See above*
Eps_DS_RX_neg (EDRN)	8	*See above*
Eps_DS_RX_pos (EDRP)	8	*See above*
}		

II.7 DRA state diagram

II.7.1 State machine conventions

When being in a particular state, only the messages shown in the diagram should be responded to. Any other message received should be ignored.

Sharp-edged rectangles indicate states. Text covering an arrow indicates the condition for that arrow. Round-edged rectangles indicate actions to be taken along the arrows and maximum time (in ms) to perform that action.

The grey states and transitions refer to the standardized Bit Swap mechanism.

IPR2025-00395
Petitioners' Exhibit 1011
Page 251 of 256

II.7.2 ATU-R state machine

See Figure II.3.

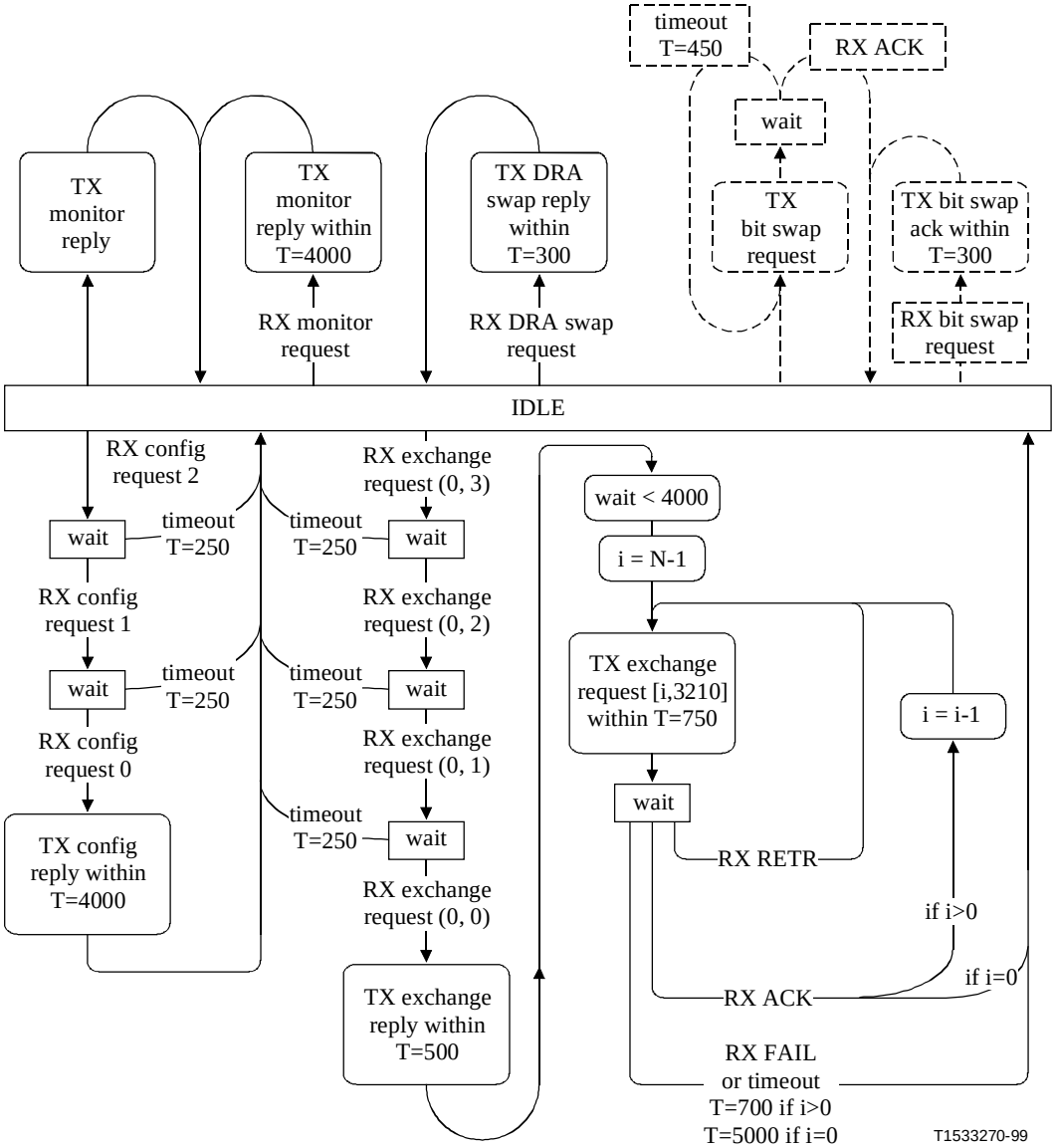

Figure II.3/G.992.1 – ATU-R state diagram for AOC

IPR2025-00395
Petitioners' Exhibit 1011
Page 252 of 256

II.7.3 ATU-C state machine

See Figure II.4.

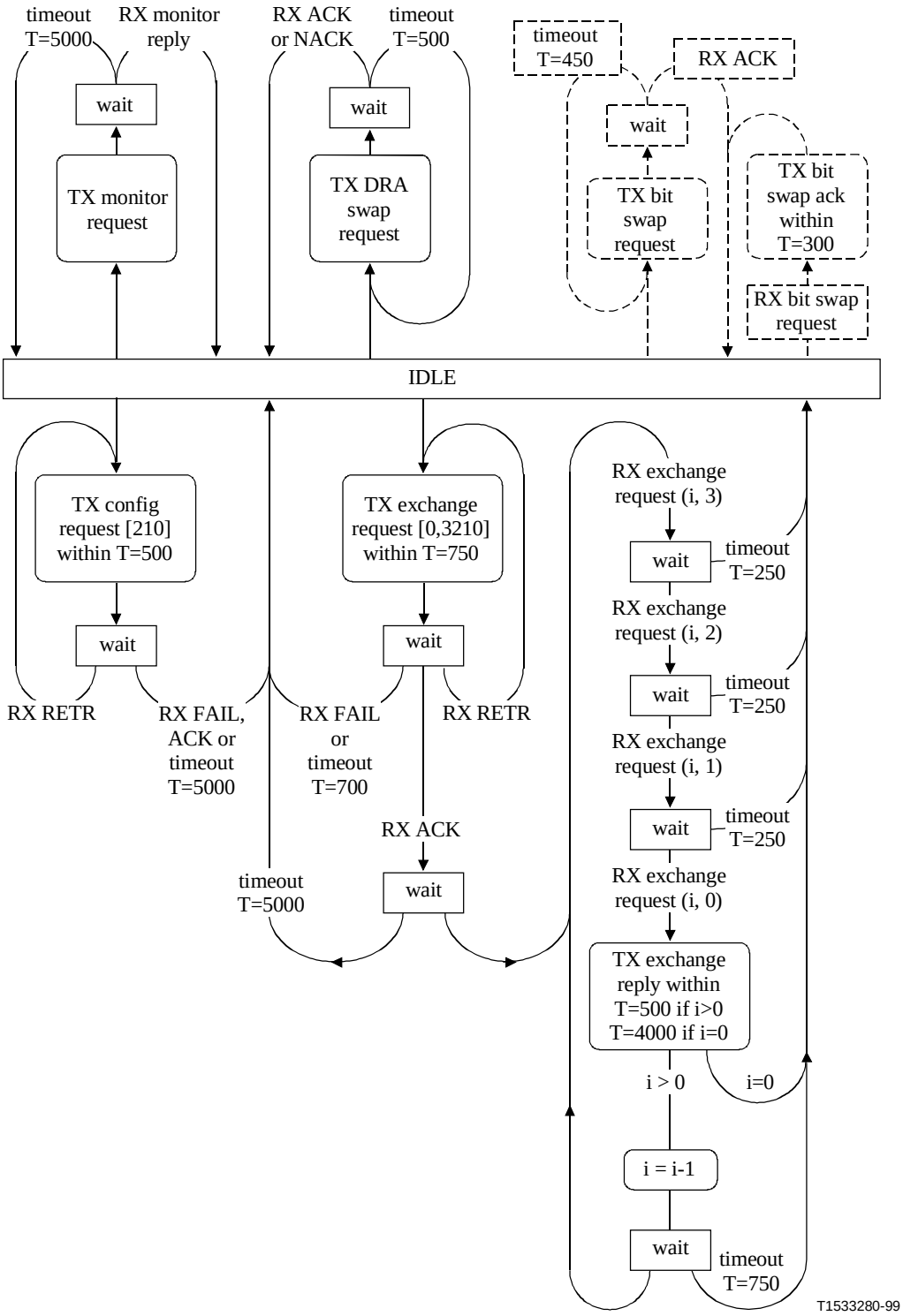

Figure II.4/G.992.1 – ATU-C state diagram for AOC

IPR2025-00395
Petitioners' Exhibit 1011
Page 253 of 256

APPENDIX III

Compatibility with other customer premises equipment

G.992.1 ATU-R transceivers may share the CPE wiring plant with other equipment, e.g. networking devices, over the POTS splitter.

Some networking devices can operate above 4 MHz on customer premises phone wiring. To prevent signals from such networking devices from aliasing into the G.992.1 frequency band, the inclusion of an adequate downstream receiver anti-aliasing filter in the G.992.1 ATU-R is recommended, collocated with the ATU-R in Figure 1-1. The filter may take the form of an external in-line filter, may be integrated into the G.992.1 ATU-R or may be integrated in the POTS splitter as specified in Annex E.

Home networking devices may coexist with voice terminals and non-voice terminals on the TELE/POTS port side (the port in Figure 1-1 that attaches to the wire leading to the telephone set or voiceband modem) of the POTS splitter used in the G.992.1 application to isolate the customer premises wiring from the ADSL signal. It is desirable that the remote POTS splitter be compatible with other customer premises wiring devices (e.g. the TELE/POTS port impedance above 4 MHz should be considered).

APPENDIX IV

Bibliography

– ITU-T Recommendation G.995.1 (1999), *Overview of Digital Subscriber Line (DSL) Recommendations*.

– ITU-T Recommendation O.41 (1994), *Psophometer for use on telephone-type circuits*.

– ITU-T Recommendation V.11 (1996), *Electrical characteristics for balanced double-current interchange circuits operating at data signalling rates up to 10 Mbit/s*.

– Technical Report No. 28 (1994), *A Technical Report on High-bit rate Digital Subscriber Lines*, Committee T1-Telecommunications.

– ATM Forum (June 1995), Specification af.phy-0039.000, *Utopia Level 2: Version 1.0.*

– ANSI/EIA/TIA-571 (1991), *Environmental considerations for telephone terminals*.

– ANSI T1.101 (1994), *Synchronization Interface Standards for Digital Networks*, Committee T1-Telecommunications, 1997.

– ANSI T1.413 (1995), *Network and Customer Installation Interfaces – Asymmetrical Digital Subscriber Line (ADSL) Metallic Interface*.

– ANSI T1.601 (1993), *Telecommunications – Interface between carriers and customer installations – Analogue voice-grade switched access lines using loop-start and ground-start signalling*.

For test setup for measurement of longitudinal balance (for example E.2.3.2.2 and E.4.3.1.6), see:

– IEEE Standard 455 (1985), *Test procedures for measuring longitudinal balance of telephone equipment operating in the voiceband.*

For test setup for measurement of distortion caused by harmonics (for example E.4.3.1.5), see:

– IEEE Standard 743 (1995), *IEEE Standard Equipment Requirements and Measurement Techniques for Analogue Transmission Parameters for Telecommunications.*

IPR2025-00395
Petitioners' Exhibit 1011
Page 254 of 256

ITU-T RECOMMENDATIONS SERIES

Series A	Organization of the work of the ITU-T
Series B	Means of expression: definitions, symbols, classification
Series C	General telecommunication statistics
Series D	General tariff principles
Series E	Overall network operation, telephone service, service operation and human factors
Series F	Non-telephone telecommunication services
Series G	**Transmission systems and media, digital systems and networks**
Series H	Audiovisual and multimedia systems
Series I	Integrated services digital network
Series J	Transmission of television, sound programme and other multimedia signals
Series K	Protection against interference
Series L	Construction, installation and protection of cables and other elements of outside plant
Series M	TMN and network maintenance: international transmission systems, telephone circuits, telegraphy, facsimile and leased circuits
Series N	Maintenance: international sound programme and television transmission circuits
Series O	Specifications of measuring equipment
Series P	Telephone transmission quality, telephone installations, local line networks
Series Q	Switching and signalling
Series R	Telegraph transmission
Series S	Telegraph services terminal equipment
Series T	Terminals for telematic services
Series U	Telegraph switching
Series V	Data communication over the telephone network
Series X	Data networks and open system communications
Series Y	Global information infrastructure
Series Z	Languages and general software aspects for telecommunication systems

17821

Printed in Switzerland
Geneva, 2000