INTERNATIONAL TELECOMMUNICATION UNION

ITU-T

TELECOMMUNICATION
STANDARDIZATION SECTOR
OF ITU

G.992.2

(06/99)

SERIES G: TRANSMISSION SYSTEMS AND MEDIA, DIGITAL SYSTEMS AND NETWORKS

Digital transmission systems – Digital sections and digital line system – Access networks

---

Splitterless asymmetric digital subscriber line (ADSL) transceivers

ITU-T Recommendation G.992.2

(Previously CCITT Recommendation)

IPR2025-00395
Petitioners' Exhibit 1012
Page 1 of 179

ITU-T G-SERIES RECOMMENDATIONS

TRANSMISSION SYSTEMS AND MEDIA, DIGITAL SYSTEMS AND NETWORKS

INTERNATIONAL TELEPHONE CONNECTIONS AND CIRCUITS	G.100–G.199
INTERNATIONAL ANALOGUE CARRIER SYSTEM	
GENERAL CHARACTERISTICS COMMON TO ALL ANALOGUE CARRIER-TRANSMISSION SYSTEMS	G.200–G.299
INDIVIDUAL CHARACTERISTICS OF INTERNATIONAL CARRIER TELEPHONE SYSTEMS ON METALLIC LINES	G.300–G.399
GENERAL CHARACTERISTICS OF INTERNATIONAL CARRIER TELEPHONE SYSTEMS ON RADIO-RELAY OR SATELLITE LINKS AND INTERCONNECTION WITH METALLIC LINES	G.400–G.449
COORDINATION OF RADIOTELEPHONY AND LINE TELEPHONY	G.450–G.499
TESTING EQUIPMENTS	
TRANSMISSION MEDIA CHARACTERISTICS	
DIGITAL TRANSMISSION SYSTEMS	
TERMINAL EQUIPMENTS	G.700–G.799
DIGITAL NETWORKS	G.800–G.899
DIGITAL SECTIONS AND DIGITAL LINE SYSTEM	G.900–G.999
General	G.900–G.909
Parameters for optical fibre cable systems	G.910–G.919
Digital sections at hierarchical bit rates based on a bit rate of 2048 kbit/s	G.920–G.929
Digital line transmission systems on cable at non-hierarchical bit rates	G.930–G.939
Digital line systems provided by FDM transmission bearers	G.940–G.949
Digital line systems	G.950–G.959
Digital section and digital transmission systems for customer access to ISDN	G.960–G.969
Optical fibre submarine cable systems	G.970–G.979
Optical line systems for local and access networks	G.980–G.989
Access networks	**G.990–G.999**

For further details, please refer to ITU-T List of Recommendations.

ITU-T RECOMMENDATION G.992.2

SPLITTERLESS ASYMMETRIC DIGITAL SUBSCRIBER LINE (ADSL) TRANSCEIVERS

Summary

This Recommendation describes the interface between the telecommunications network and the customer installation in terms of their interaction and electrical characteristics. This Recommendation allows the transmission of POTS and V-series data services simultaneously with a digital channel over a single mixed gauge twisted metallic pair. Annex C defines the procedures to operate in a TCM-ISDN noise environment. Operation in the frequency band over BRA-ISDN is for further study.

This Recommendation includes procedures to allow provisioning without the need for "splitters", typically installed at the ingress to the customer premises. Additionally, power management procedures and link states are specified to achieve power savings at the central office and customer premises.

Source

ITU-T Recommendation G.992.2 was prepared by ITU-T Study Group 15 (1997-2000) and was approved under the WTSC Resolution No. 1 procedure on 22 June 1999.

IPR2025-00395
Petitioners' Exhibit 1012
Page 3 of 179

FOREWORD

ITU (International Telecommunication Union) is the United Nations Specialized Agency in the field of telecommunications. The ITU Telecommunication Standardization Sector (ITU-T) is a permanent organ of the ITU. The ITU-T is responsible for studying technical, operating and tariff questions and issuing Recommendations on them with a view to standardizing telecommunications on a worldwide basis.

The World Telecommunication Standardization Conference (WTSC), which meets every four years, establishes the topics for study by the ITU-T Study Groups which, in their turn, produce Recommendations on these topics.

The approval of Recommendations by the Members of the ITU-T is covered by the procedure laid down in WTSC Resolution No. 1.

In some areas of information technology which fall within ITU-T's purview, the necessary standards are prepared on a collaborative basis with ISO and IEC.

NOTE

In this Recommendation, the expression "Administration" is used for conciseness to indicate both a telecommunication administration and a recognized operating agency.

INTELLECTUAL PROPERTY RIGHTS

The ITU draws attention to the possibility that the practice or implementation of this Recommendation may involve the use of a claimed Intellectual Property Right. The ITU takes no position concerning the evidence, validity or applicability of claimed Intellectual Property Rights, whether asserted by ITU members or others outside of the Recommendation development process.

As of the date of approval of this Recommendation, the ITU had not received notice of intellectual property, protected by patents, which may be required to implement this Recommendation. However, implementors are cautioned that this may not represent the latest information and are therefore strongly urged to consult the TSB patent database.

© ITU 2000

All rights reserved. No part of this publication may be reproduced or utilized in any form or by any means, electronic or mechanical, including photocopying and microfilm, without permission in writing from the ITU.

IPR2025-00395
Petitioners' Exhibit 1012
Page 4 of 179

CONTENTS

		Page
1	Scope	1
2	References	1
3	Definitions and abbreviations	2
3.1	Definitions	2
3.2	Abbreviations	3
4	Reference models	6
4.1	System reference model	6
4.2	ATU reference model	7
5	Transport capacity	8
6	ATU interfaces	9
6.1	ATU interface for ATM transport	9
6.2	ATU PMD to TC logical interface	9
7	ATU functional characteristics	10
7.1	ATM transport protocol specific functionalities	10
	7.1.1 Payload transfer delay	10
	7.1.2 ATM cell specific functionality	10
	7.1.3 Framing structure for ATM transport	12
7.2	Network Timing Reference	12
	7.2.1 Optional NTR capability	12
	7.2.2 Transport of the NTR	12
7.3	Framing	13
	7.3.1 Relationship to G.992.1 framing	13
	7.3.2 Bit ordering	13
	7.3.3 Data framing and reference points	13
7.4	Scrambler	17
	7.5 Reed-Solomon Forward Error Correction	17
	7.5.1 Reed-Solomon coding	18
	7.5.2 Reed-Solomon Forward Error Correction superframe synchronization	18
7.6	Interleaver	18
7.7	Tone ordering	19
7.8	Constellation encoder	19
	7.8.1 Bit extraction	19
	7.8.2 Constellation encoder	19
7.9	Gain scaling	22
7.10	Modulation	22

IPR2025-00395
Petitioners' Exhibit 1012
Page 5 of 179

Page

7.10.1 Subcarriers 23
7.10.2 Modulation by the inverse discrete Fourier transform (IDFT) 23
7.10.3 Synchronization symbol 24
7.10.4 Upstream data pattern 24
7.10.5 Downstream data pattern 24
7.11 Cyclic prefix 25
7.12 Transmitter dynamic range 25
7.12.1 Maximum clipping rate 25
7.12.2 Noise/Distortion floor 25
7.12.3 Transmitter spectral masks 26
8 Embedded Operations Channel (eoc) 26
8.1 eoc introduction 26
8.1.1 eoc messages overview 26
8.1.2 eoc protocol overview 26
8.2 eoc message encoding 27
8.2.1 ADDRESS field (# 1) 27
8.2.2 DATA or OPCODE field (# 2) 27
8.2.3 BYTE PARITY field (# 3) 28
8.2.4 AUTONOMOUS MESSAGE field (# 4) 28
8.2.5 INFORMATION field (# 5) 28
8.3 eoc message description 28
8.3.1 Latching bidirectional eoc messages 31
8.3.2 End of Data message (EOD) 31
8.3.3 Dying Gasp message (DGASP) 31
8.3.4 Autonomous messages 32
8.3.5 Data registers in the ATU-R 32
8.4 eoc protocol 33
8.4.1 Outstanding eoc messages 34
8.4.2 eoc state transitions 37
8.5 Clear eoc 40
9 ADSL overhead channel 40
9.1 The ADSL Overhead Control (aoc) channel introduction 40
9.1.1 Bit swap channel 40
9.1.2 Superframe counting 40
9.2 aoc message encoding 41
9.2.1 aoc message header encoding 41
9.2.2 Profile Management Request 41
9.2.3 Profile Management Acknowledge 42

IPR2025-00395
Petitioners' Exhibit 1012
Page 6 of 179

Page

9.2.4 Bit swap request message encoding 42
9.2.5 Extended bit swap request message encoding 43
9.2.6 Bit swap acknowledge message encoding 43
9.3 Bit swap operation 44
9.3.1 Bit swap – Receiver 44
9.3.2 Bit swap – Transmitter 45
9.4 aoc protocol 45
10 In-service performance monitoring and surveillance 45
10.1 ADSL line related primitives 47
10.1.1 ADSL line related near-end anomalies 47
10.1.2 ADSL line related far-end anomalies 47
10.1.3 ADSL line related near-end defects 47
10.1.4 ADSL line related far-end defects 47
10.2 ATM data path related primitives 48
10.2.1 ATM data path related near-end anomalies 48
10.2.2 ATM data path related far-end anomalies 48
10.2.3 ATM data path related near-end defects 49
10.2.4 ATM data path related far-end defects 49
10.3 Other ADSL indicators, parameters and signals 49
10.3.1 Other near-end primitives 49
10.3.2 Other far-end primitives 49
10.3.3 Failure count parameters 49
10.4 Test parameters 49
10.4.1 Near-end test parameters 50
10.4.2 Far-end test parameters 50
10.5 Other failures and parameters 50
11 Initialization 50
11.1 Overview 50
11.1.1 Basic functions of initialization 50
11.1.2 Transparency to methods of separating upstream and downstream signals 51
11.1.3 Initialization Reset Procedure 52
11.2 Handshake – ATU-C 52
11.3 Handshake – ATU-R 53
11.4 Handshake power levels 55
11.5 Escape from Handshake to Fast Retrain 55
11.5.1 C-QUIET-EF1 56
11.5.2 R-QUIET-EF1 56
11.6 Power levels in Transceiver Training, Channel Analysis and Exchange 56

IPR2025-00395
Petitioners' Exhibit 1012
Page 7 of 179

Page

11.7 Transceiver training – ATU-C 56
11.7.1 C-QUIET2 57
11.7.2 C-PILOT1 57
11.7.3 C-PILOT1A 57
11.7.4 C-QUIET3A 58
11.7.5 C-REVERB1 58
11.7.6 C-PILOT2 59
11.7.7 C-ECT 59
11.7.8 C-REVERB2 59
11.7.9 C-QUIET5 59
11.7.10 C-PILOT3 59
11.7.11 C-REVERB3 59
11.8 Transceiver training – ATU-R 59
11.8.1 R-QUIET2 59
11.8.2 R-REVERB1 60
11.8.3 R-QUIET3 60
11.8.4 R-ECT 60
11.8.5 R-REVERB2 60
11.9 Channel analysis (ATU-C) 61
11.9.1 C-SEGUE1 61
11.9.2 C-RATES1 61
11.9.3 C-CRC1 63
11.9.4 C-MSG1 63
11.9.5 C-CRC2 64
11.9.6 C-MEDLEY 65
11.10 Channel analysis (ATU-R) 65
11.10.1 R-SEGUE1 65
11.10.2 R-REVERB3 65
11.10.3 R-SEGUE2 65
11.10.4 R-RATES1 65
11.10.5 R-CRC1 66
11.10.6 R-MSG1 66
11.10.7 R-CRC2 67
11.10.8 R-MEDLEY 68
11.10.9 R-REVERB4 68
11.11 Exchange – ATU-C 68
11.11.1 C-REVERB4 70
11.11.2 C-SEGUE2 70
11.11.3 C-RATES-RA 70

IPR2025-00395
Petitioners' Exhibit 1012
Page 8 of 179

Page

11.11.4 C-CRC-RA1 71
11.11.5 C-MSG-RA 71
11.11.6 C-CRC-RA2 72
11.11.7 C-REVERB-RA 72
11.11.8 C-SEGUE-RA 72
11.11.9 C-MSG2 72
11.11.10 C-CRC3 73
11.11.11 C-RATES2 73
11.11.12 C-CRC4 74
11.11.13 C-B&G 74
11.11.14 C-CRC5 75
11.11.15 C-REVERB5 75
11.11.16 C-SEGUE3 75
11.12 Exchange – ATU-R 75
11.12.1 R-SEGUE3 75
11.12.2 R-MSG-RA 76
11.12.3 R-CRC-RA1 77
11.12.4 R-RATES-RA 77
11.12.5 R-CRC-RA2 77
11.12.6 R-REVERB-RA 77
11.12.7 R-SEGUE-RA 78
11.12.8 R-MSG2 78
11.12.9 R-CRC3 79
11.12.10 R-RATES2 79
11.12.11 R-CRC4 79
11.12.12 R-REVERB5 80
11.12.13 R-SEGUE4 80
11.12.14 R-B&G 80
11.12.15 R-CRC5 81
11.12.16 R-REVERB6 81
11.12.17 R-SEGUE5 81
11.13 Details of initialization timing 81
12 Fast Retrain 84
12.1 Fast Retrain overview 84
12.1.1 Profile requirements 84
12.2 Definition of Fast Retrain signals 84
12.2.1 Fast Retrain Signal power levels 86
12.3 Fast Retrain Procedure 87
12.3.1 ATU-C initiated from SHOWTIME 87

IPR2025-00395
Petitioners' Exhibit 1012
Page 9 of 179

Page

12.3.2 ATU-R initiated from SHOWTIME 90
12.3.3 Channel measurement 90
12.3.4 Selection of Tx power levels 91
12.3.5 Transceiver retraining 91
12.3.6 Profile exchange 91
12.4 Fast Retrain Procedure – Unknown Profile Transition 92
12.5 Fast Retrain Procedure – Initiated from L3 or Recommendation G.994.1 92
12.6 Abort of Fast Retrain 93
12.6.1 Abort of an ATU-C initiated Fast Retrain Request 93
12.6.2 Abort of an ATU-R initiated Fast Retrain Request 93
12.7 Fast Retrain Truncate 93
12.8 Fast Retrain Reset Procedure 93
13 Power management 93
13.1 Introduction 93
13.2 ADSL link states 94
13.3 Link state transitions 94
13.4 Link transition procedures 96
13.4.1 Transitions from L0 to L0 (T0a, T0b, T0c) 96
13.4.2 Transition from L0 to L1 (T0d) 96
13.4.3 Transitions from L1 to L0 (T1a, T1b, T1c, T1d) 97
13.4.4 Transitions from L0 or L1 to L3 (T0e, T0f, T1e, T1f) 97
13.4.5 Transitions from L3 to L0 (T3a, T3b) 98
13.5 eoc Handshake 98
13.5.1 ATU-R initiated eoc Handshake 98
13.5.2 ATU-C initiated eoc Handshake 99
Annex A – Non-overlapped spectrum operation 99
A.1 ATU-R transmitter PSD mask 99
A.1.1 Passband PSD ripple and group delay 100
A.1.2 Transmit power spectral density and aggregate power level 100
A.2 ATU-C transmitter PSD mask 102
A.2.1 Passband PSD ripple and group delay 103
A.2.2 Transmit power spectral density and aggregate power level 103
Annex B – Overlapped spectrum operation 105
B.1 ATU-R transmitter PSD mask 105
B.1.1 Passband PSD ripple and group delay 106
B.1.2 Transmit power spectral density and aggregate power level 106

IPR2025-00395
Petitioners' Exhibit 1012
Page 10 of 179

Page

B.2 ATU-C transmitter PSD mask 108
B.2.1 Passband PSD ripple and group delay 109
B.2.2 Transmit power spectral density and aggregate power level 109

Annex C – ADSL above POTS co-existing in the same binder as TCM-ISDN DSL 111
C.1 Scope 111
C.2 Definitions and abbreviations 111
C.2.1 Definitions 111
C.2.2 Abbreviations 112
C.3 Reference models 112
C.3.1 ATU-C transmitter reference model (replaces figure in 4.2) 112
C.3.2 ATU-R transmitter reference model (replaces figure in 4.2) 113
C.3.3 ATU transmitter timing model (new) 114
C.4 ATU interfaces 116
C.4.1 ATM interface for ATM transport (replaces figure in 6.1) 116
C.5 ATU functional characteristics (pertains to clause 7) 117
C.5.1 Payload transfer delay (supplements 7.1.1) 117
C.5.2 Framing (pertains to 7.3) 117
C.5.3 Modulation (pertains to 7.10) 122
C.5.4 Transmitter spectral mask (replaces 7.12.3) 123
C.5.5 Dual Bitmap (new) 123
C.5.6 Rate Converter (new) 123
C.5.7 FEXT Bitmap (new) 123
C.6 aoc on-line adaptation and reconfiguration (pertains to clause 9) 124
C.6.1 Bit swap request message encoding (replaces 9.2.4) 124
C.6.2 Extended bit swap request message encoding (supplements 9.2.5) 125
C.6.3 Bit swap acknowledge message encoding (supplements 9.2.6) 125
C.7 In-service performance monitoring and surveillance (pertains to clause 10) 125
C.7.1 ADSL line related primitives (pertains to 10.1) 125
C.7.2 Test parameters (supplements 10.4) 126
C.8 Initialization 126
C.8.1 Initialization with Hyperframe (new) 126
C.8.2 Escape from Handshake to Fast Retrain (replaces 11.5) 129
C.8.3 Transceiver training – ATU-C (supplements 11.7) 130
C.8.4 Transceiver training – ATU-R (supplements 11.8) 131
C.8.5 Channel analysis (ATU-C) (supplements 11.9) 132
C.8.6 Channel analysis (ATU-R) (supplements 11.10) 134
C.8.7 Exchange – ATU-C (supplements 11.11) 136
C.8.8 Exchange – ATU-R (supplements 11.12) 139

IPR2025-00395
Petitioners' Exhibit 1012
Page 11 of 179

Page

C.9 Fast retraining (supplements clause 12) 140
C.9.1 Fast Retrain overview (pertains to 12.1) 141
C.9.2 Definition of Fast Retrain signals (supplements 12.2) 141
C.9.3 Fast Retrain procedure (supplements 12.3) 141
C.9.4 Initiated from L3 or Recommendation G.994.1 (replaces 12.5) 145
C.10 Power management (pertains to clause 13) 145
C.10.1 Transition from L0 to L1 (T0d) (pertains to 13.4.2) 145

Annex D – System performance for North America 145
D.1 System performance for North America 145
D.1.1 Required test cases 146
D.1.2 Extended reach cases 146

Annex E – System performance for Europe 147
E.1 System performance for Europe 147

Appendix I 147

Appendix II – Guide to scenarios for the implementation of the various procedures in Recommendations G.994.1 and G.992.2 148

Appendix III – Compatibility with other Customer Premises Equipment 164

IPR2025-00395
Petitioners' Exhibit 1012
Page 12 of 179

Recommendation G.992.2

SPLITTERLESS ASYMMETRIC DIGITAL SUBSCRIBER LINE (ADSL) TRANSCEIVERS

(Geneva, 1999)

1 Scope

This Recommendation describes the interface between the telecommunications network and the customer installation in terms of their interaction and electrical characteristics. The requirements of the Recommendation apply only to a single asymmetric digital subscriber line (ADSL). ADSL allows the provision of voiceband services, including POTS and V-series data services, and a number of digital channels.

The transmission system is designed to operate on mixed gauge two-wire twisted metallic pairs over the existing copper facilities and over the customer premises wiring. The transmission system is based on the use of loop plant cables without loading coils. Bridged taps in the loop plant are acceptable in all but a few unusual situations.

Operation in the frequency band over ISDN is for further study.

An overview of Digital Subscriber Line Transceivers can be found in Recommendation G.995.1.

2 References

The following ITU-T Recommendations and other references contain provisions which, through reference in this text, constitute provisions of this Recommendation. At the time of publication, the editions indicated were valid. All Recommendations and other references are subject to revision; all users of this Recommendation are therefore encouraged to investigate the possibility of applying the most recent edition of the Recommendations and other references listed below. A list of the currently valid ITU-T Recommendations is regularly published.

[1] ITU-T Recommendation I.361 (1999), *B-ISDN ATM layer specification*.

[2] ITU-T Recommendations I.432 x-series, *B-ISDN user-network interface – Physical layer specification*.

[3] ITU-T Recommendation G.703 (1998), *Physical/electrical characteristics of hierarchical digital interfaces*.

[4] ITU-T Recommendation G.707 (1996), *Network node interface for the synchronous digital hierarchy (SDH)*.

[5] ITU-T Recommendation G.961 (1993), *Digital transmission system on metallic local lines for ISDN basic rate access*.

[6] ITU-T Recommendation G.994.1 (1999), *Handshake procedures for digital subscriber line (DSL) transceivers*.

[7] ITU-T Recommendation G.992.1 (1999), *Asymmetric digital subscriber line (ADSL) transceivers*.

[8] ITU-T Recommendation G.996.1 (1999), *Test procedures for digital subscriber line (DSL) transceivers*.

[9] ITU-T Recommendation G.997.1 (1999), *Physical layer management for digital subscriber line (DSL) transceivers*.

IPR2025-00395
Petitioners' Exhibit 1012
Page 13 of 179

[10] CCITT Recommendation T.35 (1991), *Procedure for the allocation of CCITT defined codes for non-standard facilities*.

[11] ITU-T Recommendation O.41 (1994), *Psophometer for use on telephone-type circuits*.

3 Definitions and abbreviations

3.1 Definitions

This Recommendation defines the following terms:

3.1.1 data frame: A frame of bytes that compose part of the superframe.

3.1.2 downstream: The transport of data in the ATU-C to ATU-R direction.

3.1.3 DMT symbol: A collection of analog samples that constitute a modulated Data Frame.

3.1.4 mux data frame: A data entity consisting of AS0/LS0 and the Sync Byte (SB).

3.1.5 AS0: The data channel from the ATU-C to the ATU-R.

3.1.6 superframe: A data entity consisting of 68 Data Frames and one Sync Frame.

3.1.7 LS0: The data channel from the ATU-R to the ATU-C.

3.1.8 sync byte: A byte of data in the Mux Data Frame that contains either aoc, eoc or IB bits.

3.1.9 sync symbol: A DMT symbol modulated with a constant data pattern.

3.1.10 sync frame: A frame of bytes that compose part of the superframe.

3.1.11 FEC output frame: A frame of data presented to the constellation encoder after Reed-Solomon encoding.

3.1.12 upstream: The transport of data in the ATU-R to ATU-C direction.

3.1.13 indicator bits: Bits used for OAM purposes.

3.1.14 subcarrier: A particular complex valued input, Z_i, to the IDFT.

3.1.15 splitter: A filter that separates the high frequency signals (ADSL) from the voiceband signals (frequently called POTS splitter).

3.1.16 voiceband: The frequency band from 0 to 4 kHz.

3.1.17 voiceband services: POTS and all data services that use the voiceband or part of it.

3.1.18 network timing reference: An 8 kHz timing marker used to support the distribution of a timing reference over the network.

Power Cutback definitions

3.1.19 absolute downstream fast retrain power cutback: The addition of Fast Retrain Politeness Power Cutback and Relative Downstream Fast Retrain Power Cutback.

3.1.20 absolute upstream fast retrain power cutback: A power cutback at the ATU-R transmitter relative to ATU-R Nominal Level. Transmitted to the ATU-C in R-MSG-FR1.

3.1.21 fast retrain politeness power cutback: A power cutback relative to the Nominal Level at the ATU-C as applied to the previous C-REVERB-FR1 signal. Transmitted in C-MSG-FR1.

3.1.22 initialization politeness power cutback: A power cutback at the ATU-C transmitter as a result of measurement of the average upstream loop attenuation during R-REVERB1.

3.1.23 nominal level: Nominal transmit level at the ATU-R shall be –38 dBm/Hz. Nominal transmit level at the ATU-C shall be –40 dBm/Hz.

IPR2025-00395
Petitioners' Exhibit 1012
Page 14 of 179

3.1.24 relative downstream fast retrain power cutback: An additional power cutback to the ATU-C transmit power that is requested by the ATU-R. This power cutback shall be relative to: (ATU-C Nominal Level – the ATU-C Fast Retrain Politeness Power Cutback). Transmitted to the ATU-C in R-MSG-FR1.

3.2 Abbreviations

This Recommendation uses the following abbreviations:

ADSL	Asymmetric Digital Subscriber Line
AFE	Analog Front End
AGC	Automatic Gain Control
ANSI	American National Standards Institute
aoc	ADSL Overhead Control
AS0	Downstream data channel
ATM	Asynchronous Transfer Mode
ATN	Attenuation
ATU	ADSL Transceiver Unit
ATU-C	ATU at the Central Office
ATU-R	ATU at the Remote End
BER	Bit Error Rate
C-B&G	Central Office Bits and Gains Information
CLP	Cell Loss Priority
CO	Central Office
CRC	Cyclic Redundancy Check
DAC	Digital-to-Analog Converter
dBrn	Ratio (in decibels) of a power level with respect to a reference power of 1 picowatt (equivalent –90 dBm) (see Annex A/O.41)
DF	Data Frame
DMT	Discrete MultiTone
DPRD	Downstream Pseudo Random Data
EC	Echo Cancellation
eoc	Embedded Operations Channel
FDM	Frequency Division Multiplex
FEBE	Far-end Block Error
FEC	Forward Error Correction
FECC	Far-end Echo Cancellation
FFEC	Far-end Forward Error Correction
FHEC	Far-end Header Error Check
FLCD	Far-end Loss of Cell Delineation

IPR2025-00395
Petitioners' Exhibit 1012
Page 15 of 179

FNCD	Far-end No Cell Delineation
FOCD	Far-end Out of Cell Delineation
GF	Galois Field
GNTPDN	Grant Power Down
GSTN	General Switched Telephone Network
HEC	Header Error Control
IB	Indicator Bit
IDFT	Inverse Discrete Fourier Transform
ISDN	Integrated Services Digital Network
K	Number of bytes in a Mux Data Frame
LCD	Loss of Cell Delineation
LOF	Loss of Frame
los	Loss of Signal
lpr	Loss of Power
LS0	Upstream data channel
LSB	Least Significant Bit
LTR	Local Timing Reference
MC	Maximum Count indication
MSB	Most Significant Bit
N	Number of bytes in an FEC Output Data Frame
NCD	No Cell Delineation
N_{CP}	Number of cyclic prefix values
N_{downi}	Size of constellation in bits for subcarrier i
N_{FEC}	Number of bytes in a Reed-Solomon Codeword
N_{IDFT}	Number of output values of the IDFT
NMS	Network Management System
N_{SC}	Number of subcarriers
NT	Network Termination
NTR	Network Timing Reference
$N_{updowmax}$	Maximum number of bits assigned per subcarrier
OCD	Out of Cell Delineation
OSS	Operations Support System
PDU	Protocol Data Unit
PHY	Physical
PMD/TC	Physical media dependent/transmission conversion
POTS	Plain Old Telephone Service

IPR2025-00395
Petitioners' Exhibit 1012
Page 16 of 179

ppm	parts per million
PRD	Pseudo-random Downstream Sequence
PRU	Pseudo-random Upstream Sequence
PSD	Power Spectrum Distribution
QAM	Quadrature Amplitude Modulation
R	Number of parity bytes per Reed-Solomon codeword
R-B&G	Remote End Bits and Gains Information
RDI	Remote Defect Indication
REJPDN	Reject Power Down
REQPDN	Request Power Down
RFI	Indication Remote Failure
RRSI	A field in an C/R-RATES and C/R-RATES-RA message
RS	Reed-Solomon
Rx	Receiver
S	DMT symbols per Reed-Solomon codeword
SB	Sync Byte
SEF	Severely Errored Frame
SF	Sync Frame
SM	Service Module
SNR	Signal-to-Noise Ratio
T-R	T reference point at the remote end
Tx	Transmitter
U-C	U reference point at the CO end
UPRD	Upstream Pseudo-Random Data
UTC	Unable To Comply
V-C	V reference point at the central office

4 Reference models

4.1 System reference model

The system reference model shown in Figure 1 describes the functional blocks required to provide ADSL service.

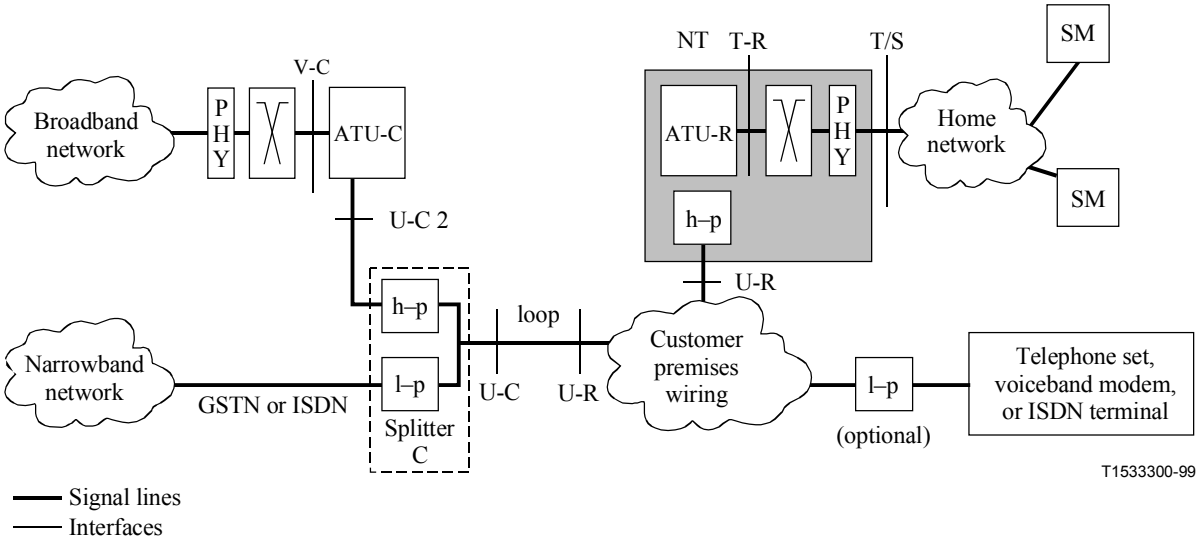

NOTE – An optional ATU-R splitter may be utilized to isolate customer premises wiring and voiceband equipment from the ADSL signal.

Figure 1/G.992.2 – System reference model

IPR2025-00395
Petitioners' Exhibit 1012
Page 18 of 179

4.2 ATU reference model

Figure 2 is a block diagram of an ADSL Transceiver Unit (ATU) transmitter showing the functional blocks and interfaces that are referenced in this Recommendation for the transport of ATM data.

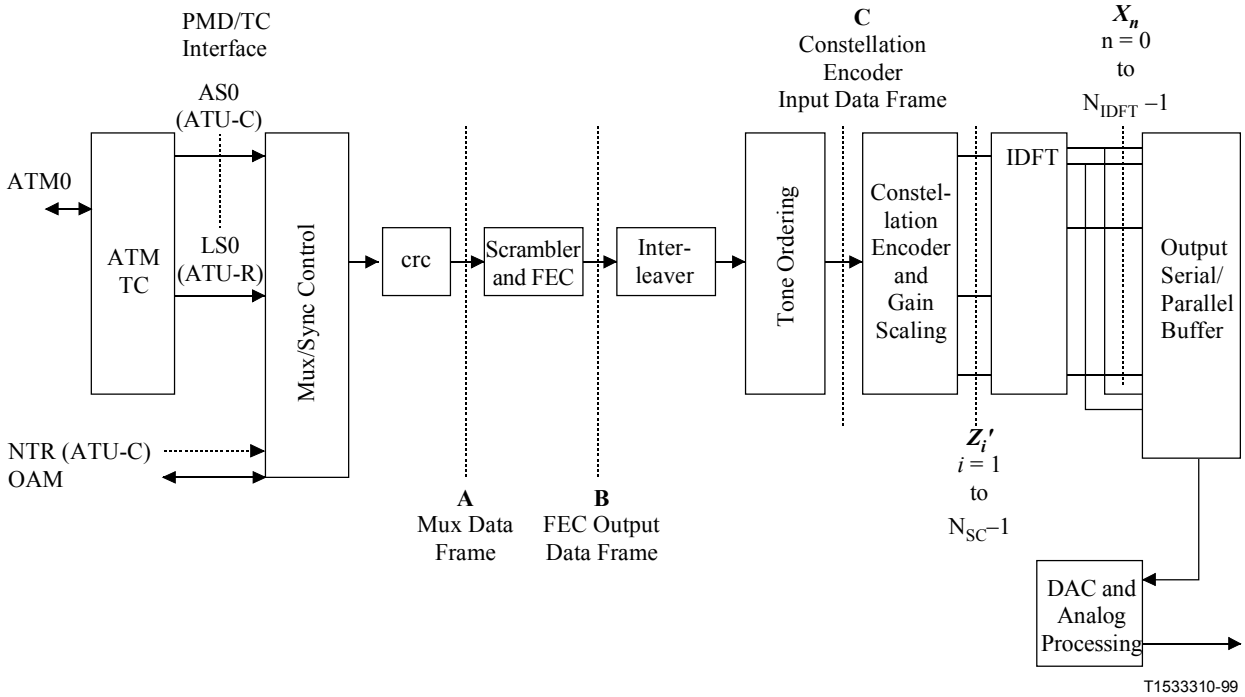

Figure 2/G.992.2 – ATU reference transmitter model

Support of ATM is required. The following requirements shall be supported:

– Byte boundaries at the V-C and T-R interface shall be preserved in the ADSL data frame.

– Outside the AS0/LS0 serial interfaces, data bytes are transmitted MSB first in accordance with Recommendations I.361 and I.432. All serial processing in the ADSL frame (e.g. crc, scrambling, etc.) shall, however, be performed LSB first, with the outside world MSB considered by the ADSL as LSB. As a result, the first incoming bit (outside world MSB) will be the first processed bit inside the ADSL (ADSL LSB) (see Figure 3), and the CLP bit of the ATM cell header will be carried in the MSB of the ADSL frame byte (i.e. processed last).

– ADSL equipment shall support bearer channel AS0 downstream and bearer channel LS0 upstream as defined in clause 5.

IPR2025-00395
Petitioners' Exhibit 1012
Page 19 of 179

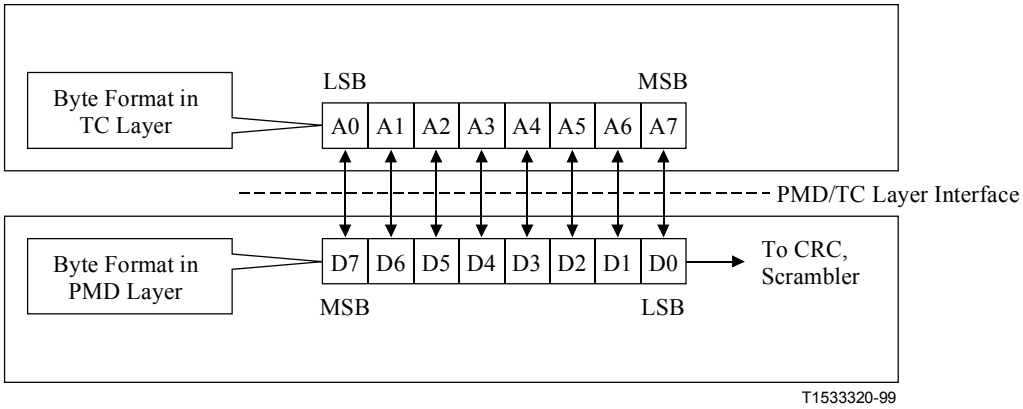

– The first serial bit handed from the TC layer to the PMD layer across the PMD/TC interface is the LSB of each PMD layer byte.
– The first serial bit handed from the PMD layer to the TC layer across the PMD/TC interface is the MSB of each TC layer byte.

Figure 3/G.992.2 – Illustration of byte flipping

5 Transport capacity

The ATU shall transport a single duplex bearer channel. The bearer channel data rate shall be programmable in multiples of 32 kbit/s.

The maximum net data rate transport capacity of the ATU will depend on the characteristics of the loop on which the system is deployed, and on certain configurable options that affect overhead (see Note). The ATU bearer channel rate shall be configured during the initialization and training procedures.

The transport capacity of the ATU system is defined only as that of the bearer channel. When, however, an ADSL system is installed on a line that also carries POTS or TCM-ISDN signals, the overall capacity is that of POTS or ISDN plus ADSL.

In addition, the ATU-C may transport a Network Timing Reference (NTR). The means for doing this are specified in 7.2.

Bearer channel AS0 shall support the transport of data at all integer multiples of 32 kbit/s from 64 kbit/s to 1.536 Mbit/s. Bearer channel LS0 shall support all integer multiples of 32 kbit/s from 32 kbit/s to 512 kbit/s.

NOTE – One part of the ATU initialization and training sequence estimates the loop characteristics to determine whether the number of bytes per Discrete MultiTone (DMT) symbol required for the requested configuration's aggregate data rate can be transmitted across the given loop. The net data rate is then the aggregate data rate minus system overhead. Part of the system overhead is dependent on the configurable options.

Table 1/G.992.2 – Data rate terminology for ATM transport

Data rate					Equation (kbit/s)	Ref. point
53×8	$\times$	ATM cell rate	=	"Net data rate"	$(B_{I,}) \times 32$	AS0, LS0
"Net data rate"	+	Frame overhead rate	=	"Aggregate data rate"	$\Sigma(K_{I,}) \times 32$	A
"Aggregate data rate"	+	RS Coding overhead rate	=	Line rate	$\Sigma(N_{I,}) \times 32 = \Sigma b_I \times 4$	B, U

IPR2025-00395
Petitioners' Exhibit 1012
Page 20 of 179

6 ATU interfaces

6.1 ATU interface for ATM transport

The functional data interfaces at the ATU for ATM are shown in Figure 4.

Flow control functionality shall be available on the interface to allow the ATU (i.e. the physical layer) to control the cell flow to and from the ATM layer. This functionality is represented by Tx_Cell_Handshake and Rx_Cell_Handshake. A cell may be transferred from the ATM to the PHY layer only after the ATU-C has activated the Tx_Cell_Handshake. Similarly, a cell may be transferred from the PHY layer to the ATM layer only after the Rx_Cell_Handshake.

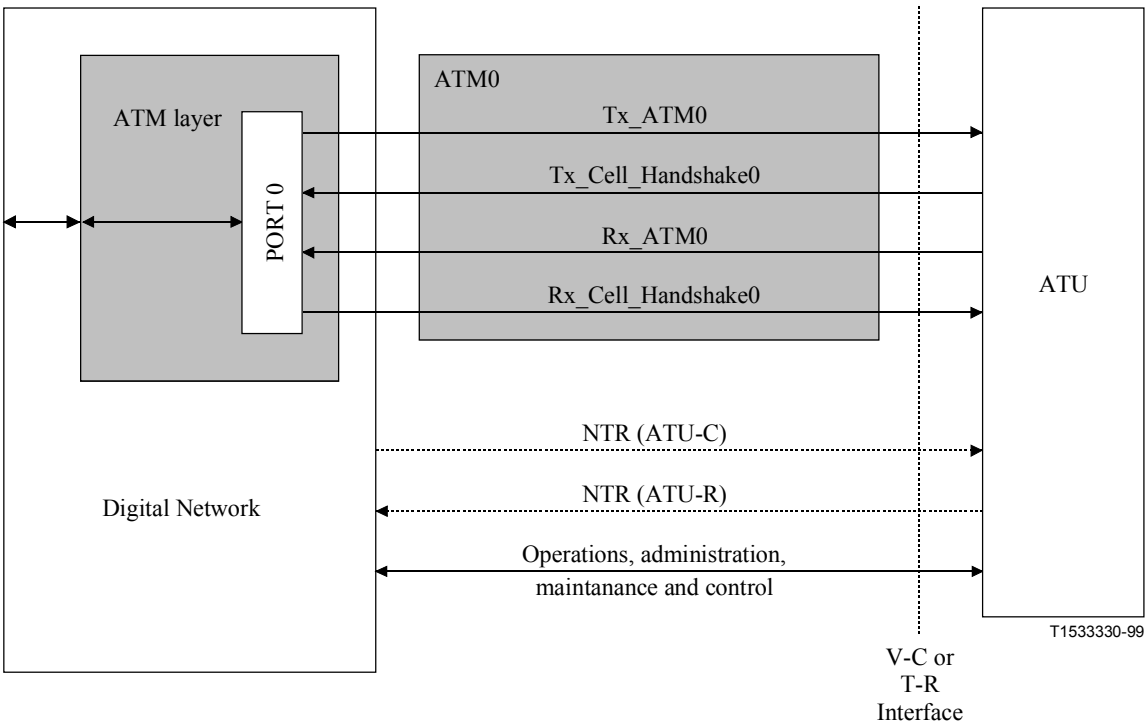

NOTE – Dashed lines indicate optional functions.

Figure 4/G.992.2 – ATU functional interface for ATM

6.2 ATU PMD to TC logical interface

The functional data interface between the PMD and ATM TC layers of the ATU are shown in Figure 5. This interface is a logical interface only and does not imply a physical implementation.

The PMD to TC logical interface is byte-oriented. The bit ordering and timing are described in 4.2 and 7.1.2.4.

IPR2025-00395
Petitioners' Exhibit 1012
Page 21 of 179

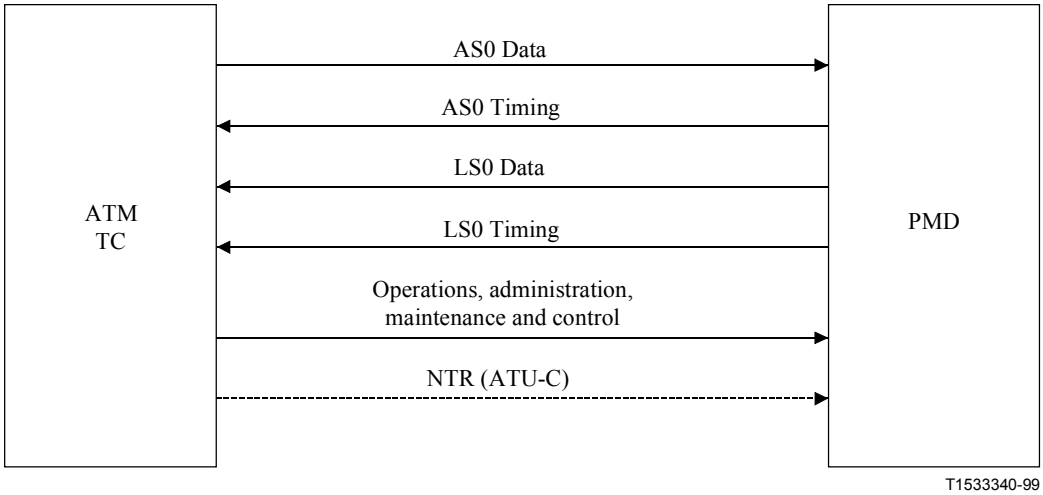

Figure 5/G.992.2 – PMD to TC logical interface

7 ATU functional characteristics

7.1 ATM transport protocol specific functionalities

7.1.1 Payload transfer delay

The one-way transfer delay (excluding cell specific functionalities) for payload bits from the V reference point at central office end (V-C) to the T reference point at remote end (T-R) should be less than or equal to $(4 + (S - 1)/4 + (S \times D)/4)$ ms. One-way payload transfer delay shall be less than $10 + (S \times D)/4$. The same requirement applies in the opposite direction, from the T-R reference point to the V-C reference point.

The additional delay introduced by the ATM cell specific functionality is implementation specific.

7.1.2 ATM cell specific functionality

7.1.2.1 Idle cell insertion

Idle cells shall be inserted in the transmit direction for cell rate de-coupling. Idle cells are identified by the standardized pattern for the cell header given in Recommendation I.432.

Idle cells shall be discarded by an ATU receiver.

7.1.2.2 Header Error Control (HEC) generation

The HEC byte shall be generated in the transmit direction as described in Recommendation I.432, including the recommended modulo 2 addition (XOR) of the pattern binary 01010101_b to the HEC bits.

The generator polynomial coefficient set used and the HEC sequence generation procedure shall be in accordance with Recommendation I.432.

7.1.2.3 Cell payload scrambling

Scrambling of the cell payload field shall be used in the transmit direction to improve the security and robustness of the HEC cell delineation mechanism. The self synchronizing scrambler polynomial $x^{43} + 1$ and procedures defined in Recommendation I.432 shall be implemented.

The cell payload shall be descrambled by an ATU receiver.

IPR2025-00395
Petitioners' Exhibit 1012
Page 22 of 179

7.1.2.4 Bit timing and ordering

When interfacing ATM data bytes to the AS0/LS0 bearer channel, the most significant bit (MSB) shall be sent first. The AS0 and LS0 bearer channel data rates shall be integer multiples 32 kbit/s, with bit timing synchronous with the ADSL downstream modem timing base.

7.1.2.5 Cell delineation

The cell delineation function permits the identification of cell boundaries in the payload. It uses the HEC field in the cell header.

Cell delineation shall be performed using a coding law checking the HEC field in the cell header according to the algorithm described in Recommendation I.432. The ATM cell delineation state machine is shown in Figure 6. The details of the state diagram are described below:

- In the HUNT state, the delineation process is performed by checking bit by bit for the correct HEC. Once such an agreement is found, it is assumed that one header has been found, and the method enters the PRESYNC state. When byte boundaries are available, the cell delineation process may be performed byte by byte.
- In the PRESYNC state, the delineation process is performed by checking cell by cell for the correct HEC. The process repeats until the correct HEC has been confirmed DELTA (see Note) times consecutively. If an incorrect HEC is found, the process returns to the HUNT state.
- In the SYNC state the cell delineation will be assumed to be lost if an incorrect HEC is obtained ALPHA times consecutively.

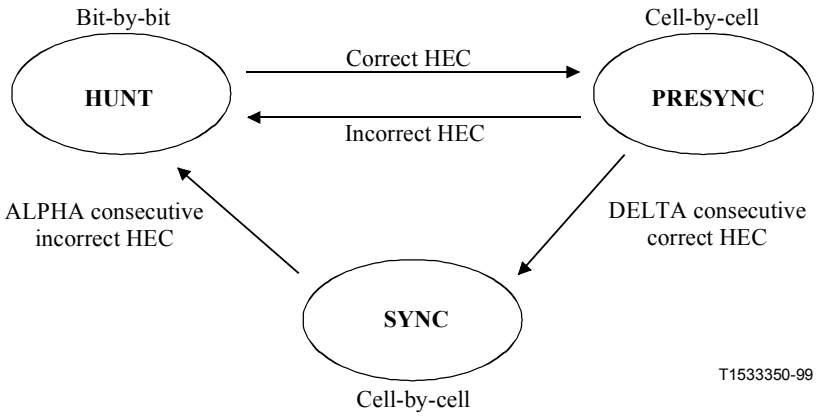

Figure 6/G.992.2 – ATM cell delineation state machine

NOTE – With reference to Recommendation I.432, no recommendation is made for the values of ALPHA and DELTA as the choice of these values is not considered to effect interoperability. However, it should be noted that the use of the values suggested in Recommendation I.432 (ALPHA = 7, DELTA = 6) may be inappropriate due to the particular transmission characteristics of ADSL.

7.1.2.6 Header Error Control verification

The HEC covers the entire cell header. The code used for this function is capable of:

– either single bit error correction;

– or multiple bit error detection.

Error detection shall be implemented as defined in Recommendation I.432 with the exception that any HEC error shall be considered as a multiple bit error, and therefore, HEC error correction shall not be performed.

IPR2025-00395
Petitioners' Exhibit 1012
Page 23 of 179

7.1.3 Framing structure for ATM transport

The ATU-C transmitter shall preserve V-C and T-R interface byte boundaries (explicitly present or implied by ATM cell boundaries) at the U-C interface.

7.2 Network Timing Reference

7.2.1 Optional NTR capability

To support the distribution of a timing reference over the network, an ATU-C may optionally transport an 8 kHz timing marker as NTR. The 8 kHz timing marker is input to the ATU-C as part of the interface at the V-C reference point.

7.2.2 Transport of the NTR

If included, an ATU-C shall transport the NTR as follows:

The ATU-C shall generate an 8 kHz local timing reference (LTR) by dividing its sampling clock by the appropriate integer. It shall transmit the change in phase offset between the input NTR and LTR (measured in cycles of a 1.104 MHz clock in units of approximately 905 ns) from the previous superframe to the present one. The phase offset shall be encoded into four bits ntr3-ntr0 (with ntr3 the MSB), representing a signed integer in the −8 to +7 range in twos-complement notation. The bits ntr3-ntr0 shall be carried in the indicator bits 23 (ntr3) to 20 (ntr0); see Table 4.

NOTE 1 – A positive value of the change of phase offset, $\Delta^2\phi$, shall indicate that the LTR is higher in frequency than the NTR.

NOTE 2 – The NTR has a maximum frequency variation of ±32 ppm. The LTR, as specified in 7.2.2, has a maximum frequency variation of ±50 ppm. The maximum mismatch is therefore ±82 ppm. This would result in an average change of phase offset in one 17 ms superframe of approximately ±1.75 clock cycles, which can be mapped into four overhead bits.

NOTE 3 – One method that the ATU-C may use to measure this change of phase offset is shown in Figure 7.

NOTE 4 – Alternatively, the ATU-C may choose to lock its downstream sampling clock (1.104 MHz) to 138 times the NTR frequency; in that case it shall encode $\Delta^2\phi$ to zero.

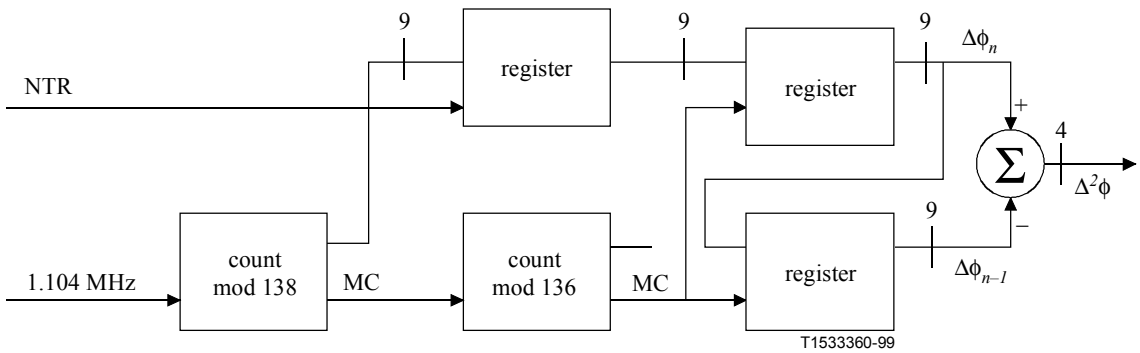

(MC is maxcount indication before foldover to 0)

Figure 7/G.992.2 – Example implementation of the $\Delta^2\phi$ measurement

IPR2025-00395
Petitioners' Exhibit 1012
Page 24 of 179

7.3 Framing

7.3.1 Relationship to G.992.1 framing

The framing is equivalent to the "reduced overhead mode with merged fast and sync bytes" as defined in Recommendation 7.4.4.2/G.992.1 using only the "interleave buffer" definition. Only a single duplex channel is supported, consisting of a simplex AS0 downstream channel and a simplex LS0 upstream channel.

7.3.2 Bit ordering

External to the AS0/LS0 serial interfaces data bytes are transmitted MSB first in accordance with Recommendations G.703, G.709, I.361 and I.432. All serial processing in the superframe (e.g. crc, scrambling, etc.) shall, however, be performed LSB first, with the outside world MSB considered as the LSB. As a result, the first incoming bit (outside world MSB) will be the first bit processed by the ATU (ATU LSB).

7.3.3 Data framing and reference points

Figure 2 shows a functional block diagram of the ATU transmitter with reference points for data framing. A cyclic redundancy check (crc), scrambling, forward error correction (FEC) coding and interleaving shall be applied to the contents of the superframe. The data stream shall then be tone ordered as defined in 7.7, and combined into a data symbol that is input to the constellation encoder. After constellation encoding the data shall be modulated to produce an analog signal for transmission across the customer loop.

DMT symbol boundaries are delineated by the cyclic prefix inserted by the modulator (see 7.11). Superframe boundaries are delineated by the Sync Symbol, which shall also be inserted by the modulator, and which carries no user data (see 7.3.3.1).

Because of the addition of FEC redundancy bytes and data interleaving, the data symbols (i.e. bit-level data prior to constellation encoding) have different structural appearance at the three reference points through the transmitter. As shown in Figure 2, the reference points for which data framing will be described in the following subclauses are:

A: Mux Data Frame: The synchronized data after the crc has been inserted (crc is specified in 7.3.3.1.2). Mux Data Frames shall be generated at a nominal 4 kHz rate. Each Mux Data Frame shall contain K bytes.

B: FEC Output Data Frame: The data frame generated at the output of the FEC encoder at the DMT symbol rate, where an FEC block may span more than one DMT symbol period. Each FEC Output Data Frame shall contain N bytes [$N = K + (R/S)$].

C: Constellation Encoder Input Data Frame: The data frame presented to the constellation encoder.

7.3.3.1 Superframe structure

The superframe structure is shown in Figure 8. Each superframe is composed of 68 "Data Frames" (DF), numbered from 0 to 67, which are encoded and modulated into DMT symbols, followed by a "Sync Frame" (SF), which carries no user or overhead bit-level data and is inserted by the modulator to establish superframe boundaries. From the bit-level and user data perspective, the DMT symbol rate is 4000 (period = 250 µs), but in order to allow for the insertion of the SF the transmitted DMT symbol rate is $69/68 \times 4000$.

IPR2025-00395
Petitioners' Exhibit 1012
Page 25 of 179

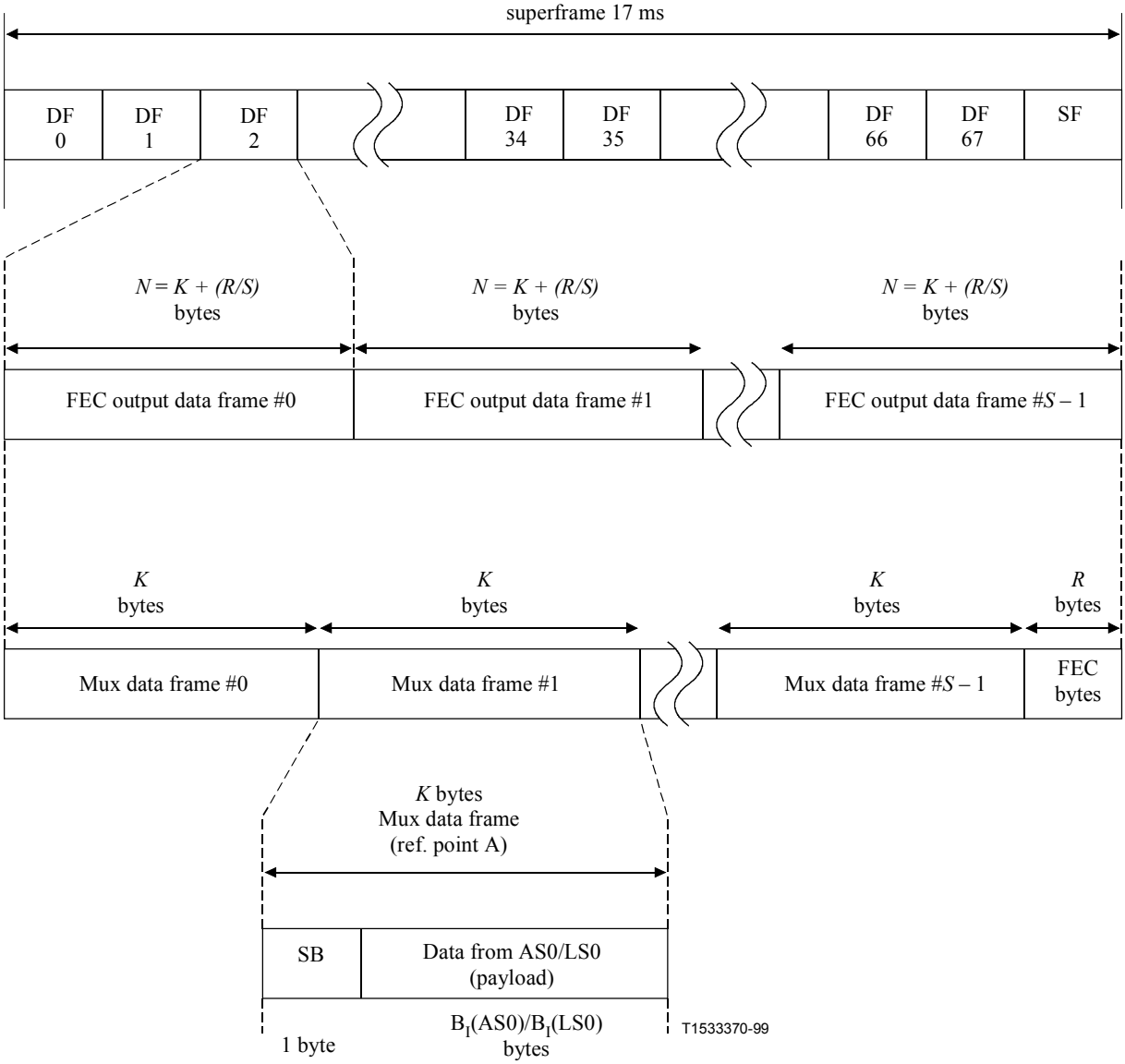

Figure 8/G.992.2 – Superframe structure

7.3.3.1.1 Use of Sync Byte (SB)

The crc, Indicator Bits, eoc and aoc functions shall be carried in the SB assigned to separate DFs within the superframe structure. The crc is transmitted in frame 0 and the Indicator Bits in frames 1, 34 and 35. The aoc and eoc bytes are assigned to alternate pairs of frames. The assignment of overhead functions to the SB shall be as shown in Table 2.

IPR2025-00395
Petitioners' Exhibit 1012
Page 26 of 179

Table 2/G.992.2 – Sync Byte functions

Data Frame (DF)	Sync Byte contents
0	crc
1	IB0-7
34	IB8-15
35	IB16-23
$4n + 2$, $4n + 3$ with $n = 0 \ldots 16$, $n \neq 8$	eoc
$4n$, $4n + 1$ with $n = 1 \ldots 16$	aoc
NOTE – The only allowable eoc synchronization code is "no synchronization action".	

7.3.3.1.1.1 eoc byte encoding

The eoc bits transported in the SB shall contain either eoc bits or the hexadecimal value of $XX0011X0_b$ in downstream and $000011X0_b$ in upstream (with X vendor discretionary) indicating "no synchronization action". The "no synchronization action" byte shall be used as fill when there is no eoc channel data to be transmitted. When transporting eoc data, the SB eoc bytes shall be encoded as in Figure 9.

Even-numbered data frames	eoc6	eoc5	eoc4	eoc3	eoc2	eoc1	r1	1_b
	MSB							LSB
Odd-numbered data frames	eoc13	eoc12	eoc11	eoc10	eoc9	eoc8	eoc7	1_b

Figure 9/G.992.2 – Sync Byte encoding for transport of eoc bytes

In all frames, bit 7 is MSB and bit 0 is LSB. Bit 0 shall be set to 1_b to indicate that the eoc byte contains an eoc message. Bit r1 shall be set to 1_b. The use of r1 is reserved by the ITU-T.

7.3.3.1.1.2 aoc byte encoding

The aoc bytes transported in the SB shall contain the aoc channel data as described in clause 9. When no aoc data is available for transmission in the superframe, the aoc byte shall contain the stuffing byte defined in 9.4.

In all frames, bit 7 is MSB and bit 0 is LSB (Figure 10).

	MSB							LSB
All data frames	aoc7	aoc6	aoc5	aoc4	aoc3	aoc2	aoc1	aoc0

Figure 10/G.992.2 – Sync Byte encoding for transport of aoc bytes

7.3.3.1.2 Cyclic redundancy check (crc)

Eight bits per superframe shall be used for the crc on the superframe (crc0-crc7). As shown in Table 2, the "Sync Byte" (SB) carries the crc check bits for the previous superframe in frame 0.

IPR2025-00395
Petitioners' Exhibit 1012
Page 27 of 179

The crc bits are computed from the k message bits using the equation:

$$\mathrm{crc}(D) = M(D)\, D^8 \text{ modulo } G(D)$$

where:

$M(D) = m_0\, Dk^{-1} + m_1\, D^{k-2} + \ldots + m_{k-2}\, D + m_{k-1}$ is the message polynomial

$G(D) = D^8 + D^4 + D^3 + D^2 + 1$ is the generating polynomial

$\mathrm{crc}(D) = c_0\, D_7 + c_1\, D^6 + \ldots + c_6 D + c_7$ is the check polynomial

and D is the delay operator.

That is, the crc is the remainder when $M(D)\, D^8$ is divided by $G(D)$. Each byte shall be clocked into the crc least significant bit first. In all frames, bit 7 = MSB and bit 0 = LSB. The bits covered by the crc are listed in Table 3.

Table 3/G.992.2 – crc coverage

Data Frame (DF)	crc coverage
0	AS0 and LS0 bytes
1-67	Sync Byte (SB), followed by AS0 and LS0 bytes.

7.3.3.1.3 Indicator Bits (IB0-IB23)

As shown in Table 2, the SB carries Indicator Bits in Data Frames 1, 34 and 35. The indicator bits are defined in Table 4.

A description of the use of the indicator bits can be found in clause 10.

Table 4/G.992.2 – Definition of indicator bits, ATU-C transmitter

Indicator bit (see Note 1)	Definition
IB0-IB7	Reserved by the ITU-T (see Note 1)
IB8	febe-i
IB9	fecc-i
IB10	Reserved by the ITU-T
IB11	Reserved by the ITU-T
IB12	los
IB13	RDI
IB14	ncd-i
IB15	Reserved by the ITU-T
IB16	hec-i
IB17-19	Reserved by the ITU-T
IB20-23	NTR bits (see 7.2.2 and Note 2)
NOTE 1 – Reserved bits are set to 1_b because all indicator bits are defined as active low. NOTE 2 – If the NTR is not transported, IB20-23 shall be set to 1_b.	

IPR2025-00395
Petitioners' Exhibit 1012
Page 28 of 179

7.4 Scrambler

The binary data streams (LSB of each byte first) at reference point A shall be scrambled using the following algorithm:

$$d'_n = d_n \oplus d'_{n-18} \oplus d'_{n-23}$$

where d_n is the n-th input to the scrambler, and d'_n is the n-th output from the scrambler. This is illustrated in Figure 11.

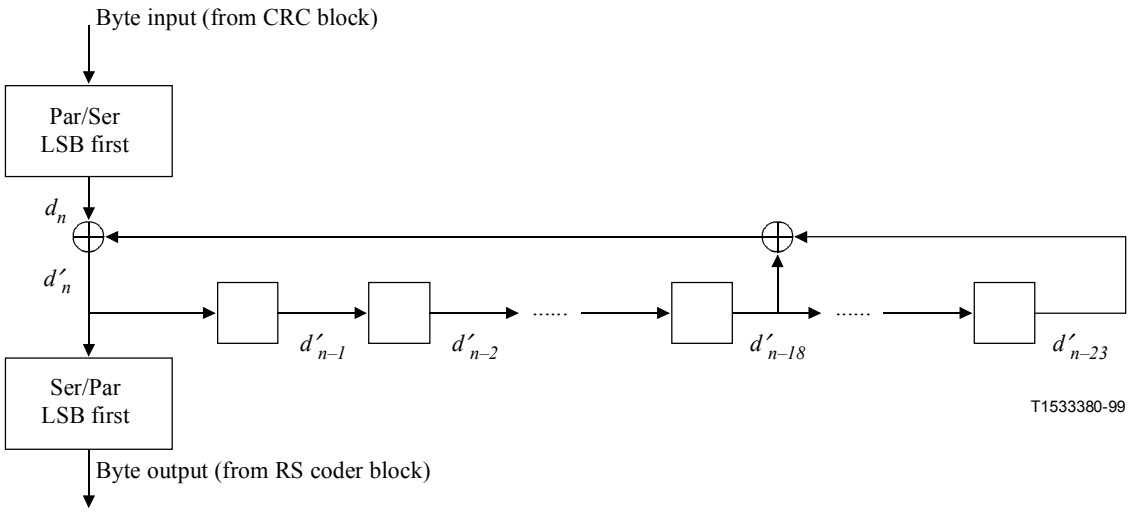

Figure 11/G.992.2 – Scrambler

7.5 Reed-Solomon Forward Error Correction

R/S bytes shall be added to the Mux Data Frame (reference point A) after scrambling to produce the FEC Output Data Frame (reference point B), where R is given in the C/R-RATES1, C/R-RATES-RA and C/R-MSG-FR2 options used during initialization and Fast Retrain.

The Reed-Solomon coder shall take in S Mux Data Frames and append R Reed-Solomon FEC redundancy bytes to produce the Reed-Solomon codeword of length $N_{FEC} = S \times K + R$ bytes. The FEC Output Data Frames shall contain $K + (R/S)$ bytes. (R/S) shall be an integer. When $S > 1$, then for the S frames in a Reed-Solomon codeword, the FEC Output Data Frame (reference point B) shall partially overlap two Mux Data Frames for all except the last frame, which shall contain the last Mux Data Frame and R FEC redundancy bytes.

The ATU shall support transmission and reception with at least any combination of the Reed-Solomon FEC coding capabilities shown in Table 5.

IPR2025-00395
Petitioners' Exhibit 1012
Page 29 of 179

Table 5/G.992.2 – Minimum FEC coding capabilities for ATU

Parameter	Capabilities
Parity bytes per *R*-*S* codeword	Mandatory: $R = 0, 4, 8$ Optional: $R = 16$ (see Note)
DMT symbols per *R*-*S* codeword	Mandatory: $S = 1, 2, 4$ and 8 Optional: $S = 16$
Interleave depth	Mandatory: $D = 1, 2, 4, 8$ and 16 (downstream) $D = 1, 2, 4, 8$ (upstream)
NOTE – *R* shall be an integer multiple of *S*.	

7.5.1 Reed-Solomon coding

When $R = 0$, no check bytes are appended and the FEC Output Data Frames are equivalent to the Mux Data Frames. For all other values of R, the following encoding procedures shall be used.

R redundant check bytes $c_0, c_1, ..., c_{R-2}, c_{R-1}$ shall be appended to $(K \times S)$ message bytes $m_0, m_1, ..., m_{K*S-2}, m_{K*S-1}$ to form a Reed-Solomon codeword of size $N_{FEC} = S \times K + R$ bytes. The check bytes are computed from the message byte using the equation:

$$C(\mathrm{D}) = M(\mathrm{D})\ \mathrm{D}^{R} \text{ modulo } G(\mathrm{D})$$

where:

$$M(\mathrm{D}) = m_0\ \mathrm{D}^{S*K-1} + m_1\ \mathrm{D}^{S*K-2} ... + m_{S*K-2}\ \mathrm{D} + m_{S*K-1}$$

is the message polynomial,

$$C(\mathrm{D}) = c_0\ \mathrm{D}^{R-1} + c_1\ \mathrm{D}^{R-2} + ... + c_{R-2}\ \mathrm{D} + c_{R-1}$$

is the check polynomial, and

$$G(\mathrm{D}) = \prod (\mathrm{D} + \alpha^{i})$$

is the generator polynomial of the Reed-Solomon code, where the index of the product runs from $i = 0$ to R–1. That is, $C(\mathrm{D})$ is the remainder obtained from dividing $M(\mathrm{D})\ \mathrm{D}^{R}$ by $G(\mathrm{D})$. The arithmetic is performed in the Galois Field GF(256), where α is a primitive element that satisfies the primitive binary polynomial $x^8 + x^4 + x^3 + x^2 + 1$. A data byte $(d_7, d_6, ..., d_1, d_0)$ is identified with the Galois Field element $d_7^{\alpha 7} + d_6^{\alpha 6} ... + d_1\alpha + d_0$.

7.5.2 Reed-Solomon Forward Error Correction superframe synchronization

After completion of Initialization and Fast Retrain, the ATU shall align the first byte of the first Reed-Solomon codeword with the first data byte of DF 0.

7.6 Interleaver

The Reed-Solomon codewords shall be convolutionally interleaved. The interleaving depth shall always be a power of 2. Convolutional interleaving is defined by the rule:

Each of the N_{FEC} bytes $B_0, B_1, ..., B_{N-1}$ in a Reed-Solomon codeword is delayed by an amount that varies linearly with the byte index. More precisely, byte B_i (with index i) is delayed by $(\mathrm{D} - 1) \times i$ bytes, where D is the interleave depth.

An example for $N_{FEC} = 5$, $\mathrm{D} = 2$ is shown in Table 6, where B^{j}_{i} denotes the i-th byte of the j-th codeword.

IPR2025-00395
Petitioners' Exhibit 1012
Page 30 of 179

Table 6/G.992.2 – Convolutional interleaving example for N_{FEC} = 5, *D* = 2

Interleaver input	$B^j{}_0$	$B^j{}_1$	$B^j{}_2$	$B^j{}_3$	$B^j{}_4$	$B^{j+1}{}_0$	$B^{j+1}{}_1$	$B^{j+1}{}_2$	$B^{j+1}{}_3$	$B^{j+1}{}_4$
Interleaver output	$B^j{}_0$	$B^{j-1}{}_3$	$B^j{}_1$	$B^{j-1}{}_4$	$B^j{}_2$	$B^{j+1}{}_0$	$B^j{}_3$	$B^{j+1}{}_1$	$B^j{}_4$	$B^{j+1}{}_2$

With the above-defined rule, and the chosen interleaving depths (powers of 2), the output bytes from the interleaver always occupy distinct time slots when N_{FEC} is odd. When N_{FEC} is even, a dummy byte shall be added at the beginning of the codeword at the input to the interleaver. The resultant odd-length codeword is then convolutionally interleaved, and the dummy byte shall then be removed from the output of the interleaver.

7.7 Tone ordering

The bit table b'_i shall be calculated based upon the original bit table b_i as follows:

There is no ordering for the number of bits allocated to the subcarriers. Therefore, the first bit is assigned to the lowest frequency used subcarriers and the last bit is assigned to the highest frequency used subcarriers (i.e. $b_i = b'_i$).

7.8 Constellation encoder

An algorithmic constellation encoder shall be used to construct constellations with a maximum number of bits equal to $N_{updownmax}$, where $8 \le N_{updownmax} \le 15$.

7.8.1 Bit extraction

Data bits from the DMT symbol buffer shall be extracted according to a re-ordered bit allocation table b'_i, least significant bit first. The number of bits per tone, b'_i, can take any non-negative integer values not exceeding $N_{updownmax}$ with the exception of $b'_i = 1$. For a given tone $b'_i = b$ bits are extracted from the DMT symbol buffer, and these bits form a binary word $\{v_{b-1}, v_{b-2}, ..., v_1, v_0\}$. The first bit extracted shall be v_0, the LSB.

7.8.2 Constellation encoder

For a given sub-channel, the encoder shall select an odd-integer point (X,Y) from the square-grid constellation based on the *b* bits $\{v_{b-1}, v_{b-2}, ..., v_1, v_0\}$. For convenience of description, these *b* bits are identified with an integer label whose binary representation is $(v_{b-1}, v_{b-2}, ..., v_1, v_0)$. For example, for $b = 2$, the four constellation points are labelled 0, 1, 2, 3 corresponding to $(v_1,v_0) = (0,0), (0,1), (1,0), (1,1)$, respectively.

NOTE – v_0 is the first bit extracted from the buffer.

7.8.2.1 Even values of *b*

For even values of *b*, the integer values X and Y of the constellation point (X,Y) shall be determined from the *b* bits $\{v_{b-1}, v_{b-2}, ..., v_1, v_0\}$ as follows. X and Y are the odd integers with twos-complement binary representations $(v_{b-1}, v_{b-3}, ..., v_1, 1)$ and $(v_{b-2}, v_{b-4}, ..., v_0, 1)$, respectively. The most significant bits (MSBs), v_{b-1} and v_{b-2}, are the sign bits for X and Y, respectively. Figure 12 shows example constellations for $b = 2$ and $b = 4$.

IPR2025-00395
Petitioners' Exhibit 1012
Page 31 of 179

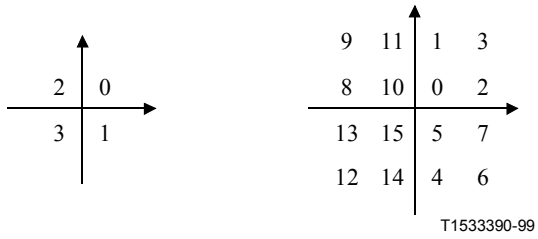

Figure 12/G.992.2 – Constellation labels for *b* = 2 and *b* = 4

The 4-bit constellation can be obtained from the 2-bit constellation by replacing each label *n* by a 2×2 block of labels as shown in Figure 13.

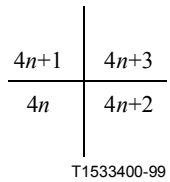

Figure 13/G.992.2 – Expansion of point *n* into the next larger square constellation

The same procedure can be used to construct the larger even-bit constellations recursively. The constellations obtained for even values of *b* are square in shape.

7.8.2.2 Odd values of *b*, *b* = 3

Figure 14 shows the constellation for the case *b* = 3.

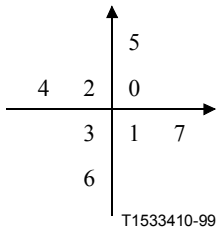

Figure 14/G.992.2 – Constellation labels for *b* = 3

7.8.2.3 Odd values of *b*, *b* > 3

If *b* is odd and greater than three, the two MSBs of X and the 2 MSBs of Y are determined by the five MSBs of the *b* bits. Let $c = (b + 1)/2$, then X and Y have the twos-complement binary representations (X_c, X_{C-1}, v_{b-4}, v_{b-6}, ..., v_3, v_1, 1) and (Y_c, Y_{C-1}, v_{b-5}, v_{b-7}, v_{b-9}, ..., v_2, v_0, 1), where X_c and Y_c are the sign bits of X and Y respectively. The relationship between X_c, X_{C-1}, Y_c, Y_{C-1} and v_{b-1}, v_{b-2}, ..., v_{b-5} is shown in Table 7.

IPR2025-00395
Petitioners' Exhibit 1012
Page 32 of 179

Table 7/G.992.2 – Determining the top 2 bits of *X* and *Y*

$v_{b-1}, v_{b-2}, ..., v_{b-5}$	X_c, X_{C-1}	Y_c, Y_{C-1}
00000_b	00_b	00_b
00001_b	00_b	00_b
00010_b	00_b	00_b
00011_b	00_b	00_b
00100_b	00_b	11_b
00101_b	00_b	11_b
00110_b	00_b	11_b
00111_b	00_b	11_b
01000_b	11_b	00_b
01001_b	11_b	00_b
01010_b	11_b	00_b
01011_b	11_b	00_b
01100_b	11_b	11_b
01101_b	11_b	11_b
01110_b	11_b	11_b
01111_b	11_b	11_b
10000_b	01_b	00_b
10001_b	01_b	00_b
10010_b	10_b	00_b
10011_b	10_b	00_b
10100_b	00_b	01_b
10101_b	00_b	10_b
10110_b	00_b	01_b
10111_b	00_b	10_b
11000_b	11_b	01_b
11001_b	11_b	10_b
11010_b	11_b	01_b
11011_b	11_b	10_b
11100_b	01_b	11_b
11101_b	01_b	11_b
11110_b	10_b	11_b
11111_b	10_b	11_b

IPR2025-00395
Petitioners' Exhibit 1012
Page 33 of 179

Figure 15 shows the constellation for the case $b = 5$.

	24	26	20	22	
19	09	11	01	03	17
18	08	10	00	02	16
31	13	15	05	07	29
30	12	14	04	06	28
	25	27	21	23	

T1533420-99

Figure 15/G.992.2 – Constellation labels for $b = 5$

The 7-bit constellation shall be obtained from the 5-bit constellation by replacing each label n by the 2×2 block of labels as shown in Figure 13.

Again, the same procedure shall be used to construct the larger odd-bit constellations recursively.

7.9 Gain scaling

For the transmission of ATU data symbols, a gain scaling, g_i, shall be applied to all tones as requested by the ATU receiver during initialization and possibly updated during SHOWTIME via the bit swap procedure. Only values of g_i within a range of approximately 0.19 to 1.33 (i.e. from −14.5 dB to +2.5 dB) may be used. For the transmission of synchronization symbols, gain scaling shall be applied as defined in Annexes A, B and C.

The g_i values are constrained by additional limits defined in Annexes A and B.

Each point, (X_i, Y_i), or complex number, $Z_i = X_i + jY_i$, output from the encoder is multiplied by g_i: $Z_i' = g_i Z_i$.

7.10 Modulation

Modulation shall use the maximum number of subcarriers N_{SC}. Table 8 defines parameters for the upstream and downstream modulation referenced in the modulation sub-paragraphs.

The actual number of subcarriers employed to modulate data may be less than the maximum and is determined during the initialization sequence. The transmitter shall designate a subset of the maximum subcarriers available for a connection during the C-REVERB1 or R-REVERB1 signals. The receiver shall designate a further subset of the transmitted subcarriers used for data modulation during the C-B&G and R-B&G signals.

ATU-R receivers shall be capable to receive the maximum set of subcarriers $N_{SC\text{-}DN}$.

Table 8/G.992.2 – Parameters for upstream and downstream modulation

Symbol	Description	Upstream	Downstream
N_{SC}	Number of subcarriers	$N_{SC\text{-}UP} = 32$	$N_{SC\text{-}DN} = 128$
N_{IDFT}	Number of output values of the IDFT ($= 2 \times N_{SC}$)	$N_{IDFT\text{-}UP} = 64$	$N_{IDFT\text{-}DN} = 256$
N_{CP}	Number of cyclic prefix values ($= N_{SC}/8$)	$N_{CP\text{-}UP} = 4$	$N_{CP\text{-}DN} = 16$

IPR2025-00395
Petitioners' Exhibit 1012
Page 34 of 179

7.10.1 Subcarriers

The frequency spacing, Δf, between subcarriers is 4.3125 kHz, with a tolerance of ±50 ppm. The subcarriers at frequencies $f = n\Delta f$ are numbered $n = 1, 2 \ldots N_{SC}$.

7.10.1.1 Data subcarriers

The initialization signals defined in clause 11 allow for a maximum of $N_{sc} - 1$ subcarriers, from $n = 1$ to $N_{sc} - 1$.

The maximum number of data subcarriers may be reduced. The lower limit of n depends upon the presence of an optional POTS splitter, PSD masks, implementation specific filters and service options. In any case, the range of useable n is determined during channel analysis.

7.10.1.2 Downstream Pilot subcarrier

In the downstream direction, subcarrier $n = 64$ ($f = 64 \times \Delta f$ kHz) shall be reserved for a pilot; that is $b(64) = 0$ and $g(64) = g_{sync}$. The pilot is transmitted from the ATU-C. The value g_{sync} represents the gain scaling applied to the sync symbol as defined in Annexes A, B and C.

The data modulated onto the pilot subcarrier shall be a constant {0,0} generating the {+,+} constellation point. Use of this pilot allows resolution of sample timing in a receiver modulo-4 modulator output values. Therefore a gross timing error that is an integer multiple of four modulator output values could still persist after a micro-interruption (e.g. a temporary short-circuit, open circuit or severe line hit); correction of such timing errors is made possible by the use of the synchronization symbol defined in 7.10.3.

7.10.1.3 Nyquist frequency subcarrier

The Nyquist frequency subcarrier $n = N_{sc}$ shall not be used for data. Uses other than data are for further study.

7.10.1.4 DC component

The DC component ($n = 0$) shall not be used and shall contain no energy.

7.10.2 Modulation by the inverse discrete Fourier transform (IDFT)

The modulating transform defines the relationship between the N_{IDFT} real values x_n and the values Z_i.

The encoder and gain scaling generate only $N_{sc} - 1$ complex values of Z_i'. These input values shall be augmented so that the vector Z_i'' has Hermitian symmetry in order to generate real values of x_n. That is:

$Z_0'' = 0$ (the DC component)

$Z_i'' = Z_i'$ for $i = 1$ to $N_{sc} - 1$

Z_{Nsc}'' = the Nyquist frequency subcarrier which is for further study, and

Z_i'' = conj ($Z_{NIDFT-i}$) for $i = N_{sc} + 1$ to $N_{IDFT} - 1$

The real valued output sequence x_n of the modulator is generated using the IDFT transform:

$$x_n = \sum_{i=0}^{N_{IDFT}-1} \exp\left(j\pi K_i / N_{sc}\right) Z_i''$$

IPR2025-00395
Petitioners' Exhibit 1012
Page 35 of 179

7.10.3 Synchronization symbol

The synchronization symbol permits recovery of the frame boundary after micro-interruptions that might otherwise force retraining. A synchronization symbol shall be inserted after every 68 data symbols. The synchronization symbol shall be constructed using a data pattern d_n, $n = 1$ to $2 \times N_{sc}$ with the following encoding method.

The first pair of bits (d_1 and d_2) shall be used for the dc component ($i = 0$) and the Nyquist frequency subcarrier ($i = N_{sc}$) (the power assigned to them is, of course, zero, so the bits are effectively ignored); the first and second bits of subsequent pairs are then used to define the X_i and Y_i for $i = 1$ to $N_{sc} - 1$ as shown in Table 9. No gain scaling shall be applied.

Table 9/G.992.2 – Mapping of two data bits into a 4-QAM constellation

$d_{2i} + 1$, $d_{2i} + 2$	Decimal label (see Note)	X_i, Y_i
0_b, 0_b	0	+ +
0_b, 1_b	1	+ –
1_b, 1_b	3	– –
1_b, 0_b	2	– +
NOTE – This is different from the mapping in Figure 12, since $d_{2i} + 1$ is the first and least significant bit.		

The minimum set of subcarriers to be used is the set used for data transmission (i.e. those for which $b_i > 0$); subcarriers for which $b_i = 0$ may be used at a reduced PSD as defined in A.2.2.3 and B.2.2.3. The data modulated onto each subcarrier shall be as defined above; it shall not depend on which subcarriers are used.

7.10.4 Upstream data pattern

The data pattern used in the upstream synchronization symbol shall be the pseudo-random sequence UPRD d_n, for $n = 1$ to $2 \times N_{SC\text{-}UP}$, defined by:

$d_n = 1$ for $n = 1$ to 6

$d_n = d_{n-5} \oplus d_{n-6}$ for $n = 7$ to $2 \times N_{SC\text{-}UP}$

The bits d_1-d_6 are re-initialized for each symbol, so each symbol uses the same data.

7.10.5 Downstream data pattern

The data pattern used in the downstream synchronization symbol shall be the pseudo-random sequence DPRD d_n, for $n = 1$ to $2 \times N_{SC\text{-}DN}$, defined by:

$d_n = 1$ for $n = 1$ to 9

$d_n = d_{n-4} \oplus d_{n-9}$ for $n = 10$ to $2 \times N_{SC\text{-}DN}$

The bits d_1-d_9 are re-initialized for each symbol, so each symbol uses the same data.

In the downstream direction, bits 129 and 130, which modulate the pilot carrier, shall be overwritten by {0,0} generating the {+,+} constellation.

IPR2025-00395
Petitioners' Exhibit 1012
Page 36 of 179

7.11 Cyclic prefix

The last N_{CP} samples of the output of the IDFT x_n, for $n = (N_{IDFT} - N_{CP}$ to $N_{IDFT} - 1)$ shall be prepended to the block of N_{IDFT} samples and read out to the digital-to-analog converter (DAC) in sequence. That is, the subscripts, n, of the DAC samples in sequence are as shown in Table 10.

Table 10/G.992.2 – Output sample order to DAC

	Output sample to DAC	
Cyclic prefix samples	$N_{IDFT} - N_{CP}$	← First sample transmitted
	. . .	
	$N_{IDFT} - 1$	
Modulator output samples	0	
	1	
	2	
	. . .	
	$N_{IDFT} - 1$	← Last sample transmitted

T1533430-99

The cyclic prefix shall be used for data and synchronization symbols beginning with the C-RATES1 and R-REVERB3 segment of the initialization sequence, as defined in clause 11.

7.12 Transmitter dynamic range

The transmitter includes all analog transmitter functions: The DAC, the anti-aliasing filter, the hybrid circuitry, and the POTS splitter. The transmitted signal shall conform to the frequency requirements as described in 7.10.1 for frequency spacing.

7.12.1 Maximum clipping rate

The maximum output signal of the transmitter shall be such that the output signal shall be clipped no more than 0.00001% of the time.

7.12.2 Noise/Distortion floor

The signal-to-noise plus distortion ratio of the transmitted signal in a given subcarrier is specified as the ratio of the rms value of the tone in that subcarrier to the rms sum of all the non-tone signals in the 4.3125 kHz frequency band centered on the subcarrier frequency. This ratio is measured for each subcarrier used for transmission using a MultiTone Power Ratio (MTPR) test as shown in Figure 16.

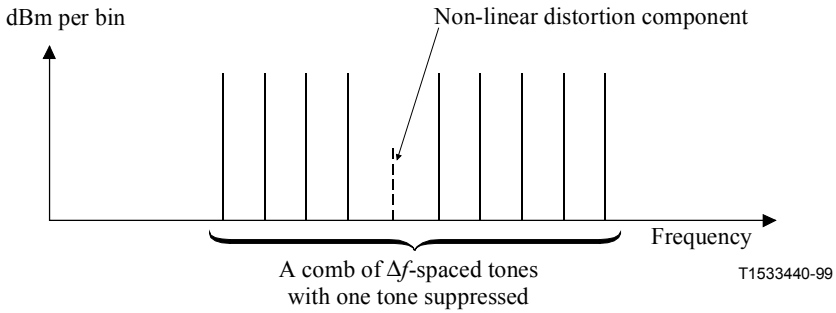

Figure 16/G.992.2 – MTPR test

IPR2025-00395
Petitioners' Exhibit 1012
Page 37 of 179

Over the transmission frequency band, the MTPR of the transmitter in any subcarrier shall be no less than ($3N_{downi}$ + 20) dB, where N_{downi} is defined as the size of the constellation (in bits) to be used on subcarrier *i*. The minimum transmitter MTPR shall be at least 38 dB (corresponding to an N_{downi} of 6) for any subcarrier.

NOTE – Signals transmitted during normal initialization and data transmission cannot be used for this test because the DMT symbols have a cyclic prefix appended, and the PSD of a non-repetitive signal does not have nulls at any subcarrier frequencies. A gated FFT-based analyser could be used, but this would measure both the non-linear distortion and the linear distortion introduced by the transmit filter. Therefore this test will require that the transmitter be programmed with special software – probably to be used during development only. The subject of an MTPR test that can be applied to a production modem is for further study.

7.12.3 Transmitter spectral masks

Spectral masks for the two service options are defined in Annexes A and B. For Non-Overlapped Spectrum operation, see Annex A. For Overlapped Spectrum operation, see Annex B.

NOTE – The band from 25 to 552 kHz that is referred to is the widest possible band (used for ADSL over POTS implemented with echo cancelling). Limits defined within this band apply also to any narrower bands used.

8 Embedded Operations Channel (eoc)

8.1 eoc introduction

An embedded operations channel for communication between the ATU-C and ATU-R shall be supported for in-service and out-of-service maintenance and for the retrieval of ATU-R status information and performance monitoring parameters.

This subclause defines the messages and protocols of the eoc channel. In addition, this subclause describes the "clear eoc channel". The encoding of these messages is defined in 8.2. The insertion of eoc messages into the superframe structure is defined in 7.3.3.1.1.1.

8.1.1 eoc messages overview

The eoc messages are organized into four basic types:

1) Bidirectional eoc messages are sent by the ATU-C and require the use of the eoc command protocol.
2) ATU-C to ATU-R messages are sent by the ATU-C as part of the eoc read protocol.
3) ATU-R to ATU-C messages are sent by the ATU-R as eoc command protocol responses or autonomous messages.
4) Clear eoc messages: These messages are transmitted as autonomous messages and may be sent by either the ATU-C or ATU-R.

8.1.2 eoc protocol overview

eoc protocol actions are dependent upon which state the protocol is in Figures 18 and 19 (in 8.4.2) illustrate the various eoc protocol states for both the ATU-C and ATU-R.

The eoc protocol allows the ATU-C (acting as master) to invoke eoc commands and the ATU-R (acting as slave) to respond to the commands. As the master, the ATU-C determines the rate of eoc commands over the link.

The eoc channel may also transmit autonomous messages in both the upstream and downstream direction. Using autonomous messages, the ATU-R can signal the ATU-C of events and initiate certain eoc commands. In addition, autonomous messages allow the ATU-C and ATU-R to exchange the clear eoc channel information.

IPR2025-00395
Petitioners' Exhibit 1012
Page 38 of 179

During periods of no eoc activity, the eoc channel may be filled with either a HOLD or RTN eoc message as described in 8.3 or by a "no synchronization action" as described in 7.3.3.1.1.1.

If the ATU-R receives an eoc command that it cannot comply with, the ATU-R shall reply with a "Unable to Comply" message as described in 8.3.

8.2 eoc message encoding

The 13 bits of an eoc message are partitioned into five fields, which are summarized in Table 11.

Table 11/G.992.2 – eoc message fields

Field #	Bit(s)	Field	Notes
1	1, 2	ADDRESS field	Can address four locations
2	3	DATA (0_b) or OPCODE (1_b) field	
3	4	BYTE PARITY field Odd (binary 1) or even (0_b)	Byte order indication for multi-byte transmission
4	5	AUTONOMOUS MESSAGE field ATU-C: Set to 1_b for ATU-C commands sent to ATU-R, set to 0_b for autonomous transfers. ATU-R: Set to 1_b for response to ATU-C command, set to 0_b for autonomous transfers.	
5	6-13	INFORMATION field	See Table 13

8.2.1 ADDRESS field (# 1)

The two bits of the ADDRESS field can address up to four locations. Only two locations are presently defined (Table 12).

Table 12/G.992.2 – ADDRESS field encoding

Address bit (1, 2)	Location
00_b	ATU-R
01_b	Reserved by ITU-T
10_b	Reserved by ITU-T
11_b	ATU-C

The ATU-C shall address messages to the ATU-R by setting the ADDRESS field equal to the ATU-R address. When responding to an eoc message from the ATU-C, the ATU-R shall keep the ADDRESS field equal to its own ATU-R address. Only when sending an autonomous message to the ATU-C shall the ATU-R set the ADDRESS field equal to the ATU-C address.

8.2.2 DATA or OPCODE field (# 2)

A 0_b in this field indicates that the INFORMATION field of the current eoc message contains a data byte; a 1_b indicates that it contains an operation code for an eoc message. See Table 13.

IPR2025-00395
Petitioners' Exhibit 1012
Page 39 of 179

Table 13/G.992.2 – INFORMATION field functions

DATA (Bit 3)	AUTONOMOUS MESSAGE (Bit 5)	Function of INFORMATION field
0_b	0_b	Data carries a clear eoc data octet.
0_b	1_b	Data used for read or write.
1_b	0_b	Data carries an autonomous message opcode. See Table 11.
1_b	1_b	Data carries an eoc command opcode. See Table 11.

8.2.3 BYTE PARITY field (# 3)

When using the Next Byte opcode to read or write the first data byte of an eoc register, this bit shall be set to 1_b to indicate "odd" byte. For the next byte, it shall be set to 0_b to indicate "even" byte and so on, alternately.

The BYTE PARITY field shall always be set to 1_b if the eoc message is an autonomous message or if the information field carries an opcode different from the Next Byte opcode. The BYTE PARITY field may be set to 0_b otherwise.

8.2.4 AUTONOMOUS MESSAGE field (# 4)

The ATU-C sets this field to a 1_b to indicate that the current eoc message is an eoc protocol command (master) message, and sets it to a 0_b to indicate that the eoc message is an autonomous message. The ATU-R sets this field to a 1_b to indicate that the current eoc message is an eoc protocol response (slave) message, and sets it to a 0_b to indicate that it is an autonomous message. See Table 13.

8.2.5 INFORMATION field (# 5)

The function of the INFORMATION field depends upon the settings of other message fields. The encoding indicated by DATA field and AUTONOMOUS MESSAGE field together (bits 3 and 5) indicate the function of the INFORMATION field. The valid encodings are summarized in Table 13.

8.3 eoc message description

Valid eoc messages and their opcodes are summarized in Table 14. The opcode values are given in hex (MSB left, LSB right) with the MSB mapping to bit eoc13 and the LSB to bit eoc6. The Direction D/U indicates that the message may be sent both in the downstream and upstream direction. The Direction D or U indicates that the message is transmitted in the downstream or upstream direction respectively.

IPR2025-00395
Petitioners' Exhibit 1012
Page 40 of 179

Table 14/G.992.2 – eoc message opcodes

Bidirectional eoc messages			
Value	**Abbreviation**	**Direction**	**Opcode meaning**
01_{16}	HOLD	D/U	The message "Hold" tells the ATU-R to transition to the idle state and maintain any previously latched operations. This message may also be transmitted during the idle state.
$F0_{16}$	RTN	D/U	The message "Return to Normal" releases all outstanding eoc-controlled operations (latched conditions) at the ATU-R and returns the eoc protocol system to the idle state. This message may also be transmitted during the idle state.
02_{16}	SLFTST	D/U	The message "Self Test" requests the ATU-R to perform a self test. The result of the self test shall be stored in the self-test data result register.
07_{16}	REQCOR	D/U	The message requests the ATU-R to send corrupt crc bits to the ATU-C until cancelled by the "Request End of Corrupt crc" or "Return to Normal" message. This command shall be latching as per 8.3.1.
08_{16}	REQEND	D/U	The message requests the ATU-R to stop sending corrupt crc bits to the ATU-C.
$0B_{16}$	NOTCOR	D/U	The message notifies the ATU-R that the ATU-C shall send corrupt crc bits until cancellation is indicated by "Notify End of Corrupted crc" or "Return to Normal". This command shall be latching as per 8.3.1.
$0D_{16}$	NOTEND	D/U	The message notifies the ATU-R that the ATU-C has stopped sending corrupt crc bits.
$0E_{16}$	EOD	D/U	The message "End of Data" is sent by the ATU-C as part of the eoc write protocol after it has sent all bytes of data to the ATU-R. This message has a slightly different meaning when sent by the ATU-R, as defined in 8.3.2.
13_{16}	REQTPU	D/U	This message requests the ATU-R to update the test parameter set as defined in 10.2. Test parameters supported by the ATU-R shall be updated and stored in a data register within 10 s after the request is received.
16_{16}	GNTPDN	D/U	This message is sent by the ATU-C to acknowledge a REQPDN from the ATU-R or to initiate a power down request itself. When the ATU-R receives GNTPDN, it uses the value of data register A to determine the power management link state granted by the ATU-C. See 13.4.
83_{16}	REJPDN	D/U	This message is sent by the ATU-C to acknowledge a REQPDN from the ATU-R. When the ATU-R receives REJPDN, it cancels its REQPDN request, and remains in the current link state. See 13.5.1.

IPR2025-00395
Petitioners' Exhibit 1012
Page 41 of 179

Table 14/G.992.2 – eoc message opcodes *(continued)*

Bidirectional eoc messages			
Value	**Abbreviation**	**Direction**	**Opcode meaning**
(20_{16}, 23_{16}, 25_{16}, 26_{16}) (29_{16}, $2A_{16}$, $2C_{16}$, $2F_{16}$) (31_{16}, 32_{16}, 34_{16}, 37_{16}) (38_{16}, $3B_{16}$, $3D_{16}$, $3E_{16}$)	WRITE	D/U	This write or receive message directs the ATU-R to enter the Data Write Protocol state, receive data, and write it in the data register specified by the Opcode. Opcode 20_{16}, and $3E_{16}$, correspond to data register 0_{16}, and F_{16}, respectively.
(40_{16}, 43_{16}, 45_{16}, 46_{16}) (49_{16}, $4A_{16}$, $4C_{16}$, $4F_{16}$) (51_{16}, 52_{16}, 54_{16}, 57_{16}) (58_{16}, $5B_{16}$, $5D_{16}$, $5E_{16}$)	READ	D/U	This read or send message directs the ATU-R to enter the Data Read Protocol state, read data from the data register specified by the Opcode, and transmit it to the ATU-C. Opcode 40_{16} and $5E_{16}$ correspond to data register 0_{16} and F_{16}, respectively.
ATU-C to ATU-R (downstream) messages			
Value	**Abbreviation**	**Direction**	**Opcode meaning**
10_{16}	NEXT	D/U	This message is sent multiply by the ATU-C (toggling bit four for multi-byte data until all data has been sent) while it is in Data Read Protocol state (i.e. after the ATU-R has acknowledged the previously sent Receive/Write Data command.
ATU-R to ATU-C (upstream) messages			
Value	**Abbreviation**	**Direction**	**Opcode meaning**
15_{16}	REQPDN	U	This is an autonomous message sent by the ATU-R to initiate a transition to a new power management link state. REQPDN is acknowledged by the ATU-C by optionally writing the value of the granted link state into data register A, and sending GNTPDN. Or, the ATU-C can send REJPDN to reject the requested link state. See 13.5.1.
$E7_{16}$	DGASP	U	This is an autonomous (i.e. unsolicited) message that the ATU-R may send to indicate the pending loss of link because the ATU-R has lost power; see 8.3.3.
04_{16}	UTC	U	This is a message is sent by the ATU-R to acknowledge receipt of eoc message that it cannot perform.

IPR2025-00395
Petitioners' Exhibit 1012
Page 42 of 179

Table 14/G.992.2 – eoc message opcodes *(concluded)*

Reserved Opcodes			
Value	**Abbreviation**	**Direction**	**Opcode meaning**
(19_{16}, $1A_{16}$, $1C_{16}$, $1F_{16}$)		D/U	Four message opcodes are reserved for vendor proprietary use. The ATU-C shall read the Vendor ID (identification) code data register of the ATU-R to ensure compatibility between ATUs before using proprietary opcodes.
(80_{16}, 85_{16}, 86_{16}, 89_{16}, $8A_{16}$, $8C_{16}$, $8F_{16}$)			Reserved by ITU-T.

8.3.1 Latching bidirectional eoc messages

Some of the bidirectional eoc messages transmitted by the ATU-C are "latching" commands, meaning that a subsequent eoc message, transmitted from the ATU-C, shall be required to release the ATU-R from that state. Thus, multiple eoc-initiated actions can be in effect simultaneously. A separate command, "Return To Normal", is used to unlatch all latched states. This command is also used to bring the eoc protocol system to a known state, the Idle State, when no commands are active in the ATU-R location. To maintain the latched condition, the command "Hold State" shall be sent to bring the eoc protocol system to a known state, the Idle State.

8.3.2 End of Data message (EOD)

This message is sent by the ATU-C as part of the eoc write protocol after it has sent all bytes of data to the ATU-R.

This message may have a slightly different meaning when sent by the ATU-R. This message may be sent by the ATU-R:

- in response to an "End of Data" message from the ATU-C;
- in response to a "Next Byte" message from the ATU-C that is received after all bytes have been read from the currently addressed ATU-R register; or
- in response to a message from the ATU-C that contains a data byte after all bytes have been written to the currently addressed ATU-R register.

8.3.3 Dying Gasp message (DGASP)

The ATU-R shall have the ability to detect when the electrical power has been shut off. After such detection of a near-end Loss of Power (lpr) defect (see 10.3.2), the ATU-R shall insert priority eoc messages into the upstream data to implement a "dying gasp" as an lpr indicator.

At least six contiguous dying gasp eoc messages shall be inserted in the next (at least twelve) available upstream bytes available for eoc beginning with an even-numbered frame, regardless of the number of eoc frames received in the downstream channel.

The ATU-C shall not send a response to a "dying gasp" message back to the ATU-R. An lpr indicator is present at the ATU-C if at least four "dying gasp" messages are received within the last twelve contiguous upstream bytes available for eoc, beginning with the even-numbered frame (see Loss of Power primitive definition in 10.3.2). Sending the "dying gasp" shall not cause the ATU-R to change the eoc protocol state, nor shall receiving it cause the ATU-C to immediately change state.

IPR2025-00395
Petitioners' Exhibit 1012
Page 43 of 179

8.3.4 Autonomous messages

Autonomous messages are unsolicited data transfers that can be initiated by either the ATU-C or ATU-R.

Autonomous messages can be inserted regardless of the state of the eoc protocol state machine and do not affect the eoc protocol state. An autonomous message allows for the transport of a single byte of data. Consecutive autonomous messages can be issued as soon as appropriate eoc bytes in the superframe are available. The flow of autonomous messages may be interrupted at any time for bidirectional, ATU-C to ATU-R or ATU-R to ATU-C eoc messages.

8.3.5 Data registers in the ATU-R

Table 15 summarizes the ATU-R data registers and their applications. The register numbers are given in hexadecimal. Use of some registers is restricted as read only. Some registers are multi-byte and shall be read most significant byte first. Registers 9_{16} and B_{16} through F_{16} are reserved for future use by the ITU-T. The ATU-R shall respond with a UTC (Unable to Comply) if requested to read from or write to one of these registers.

Table 15/G.992.2 – ATU-R data registers

Number	Use	Length	Description
0_{16}	Read	8 bytes	ATU-R Vendor ID
1_{16}	Read	Vendor discretionary	ATU-R Revision number
2_{16}	Read	32 bytes	ATU-R Serial number (32 bytes): The format of the ATU-R Serial number is vendor discretionary.
3_{16}	Read	Vendor discretionary	Self Test Results: The most significant byte of the Self Test Results shall be 00_{16} if the selftest passed, and 01 hex if it failed (the meaning of "failure" is vendor discretionary); other values are reserved for future use. The length and syntax of the remainder are vendor discretionary.
4_{16}	Read/Write	Vendor discretionary	Vendor discretionary
5_{16}	Read/Write	Vendor discretionary	Vendor discretionary
6_{16}	Read	1 byte	Line attenuation: The line attenuation is defined in 10.4.
7_{16}	Read	1 byte	SNR Margin: The SNR margin is defined in 10.4.

IPR2025-00395
Petitioners' Exhibit 1012
Page 44 of 179

Table 15/G.992.2 – ATU-R data registers *(concluded)*

Number	Use	Length	Description
8_{16}	Read	30 bytes	ATU-R configuration: The ATU-R configuration data, as defined in 7.3, shall be read (one byte for each variable) in the following order: Downstream: Reserved, B_I(AS0), reserved, reserved, Reserved, reserved, reserved, reserved, Reserved, reserved, reserved, reserved, Reserved, reserved, reserved. Upstream: Reserved, B_I(LS0), reserved, reserved, reserved, reserved, reserved. Downstream: Reserved, RS_I, S, D ($RS_I = R_I/S$) Upstream: Reserved, RS_I, S, D ($RS_I = R_I/S$), Reserved bytes shall be set to 00_{16}.
9_{16}	Reserved	Reserved	
A_{16}	Read/Write	1 byte	Link State: When a link state transition request is pending from the ATU-R, then the value of register A shall be set to the requested link state. At all other times, the value of register A shall contain the current power management link state. Link State encoding (hexadecimal): L0: 00_{16} L1: 01_{16} L3: 03_{16} Reserved by the ITU-T: 02_{16} and 04-$7F_{16}$
B-F_{16}	Reserved	Reserved	

8.4 eoc protocol

The eoc protocol operates in a repetitive command and response mode. The ATU-C acts as the master and issues bidirectional eoc messages. The ATU-R acts as slave and responds to the bidirectional messages issued by the ATU-C by echoing the message back to the ATU-C.

Three identical properly-addressed consecutive (i.e. no other eoc messages are received in between) messages shall be received before an action is initiated (both at ATU-C and ATU-R). Only one command and only three or fewer messages, under the control of the ATU-C, shall be outstanding (i.e. unacknowledged) at any one time.

NOTE – This restriction on the number of messages guarantees that an ATU-R with fewer opportunities to insert eoc frames into the upstream path will be able to acknowledge all eoc messages from the ATU-C.

Autonomous messages are transmitted transparent to the eoc protocol and do not change the protocol state at the ATU-R and ATU-C.

IPR2025-00395
Petitioners' Exhibit 1012
Page 45 of 179

8.4.1 Outstanding eoc messages

The procedure for dealing with outstanding messages at the ATU-C is shown in Figure 17. The ATU-C may only begin transmission of a new eoc message after reception of three consecutive ATU-R echoes of any current outstanding eoc message. When one or two messages are outstanding, the ATU-C may only repeat the previous message sent; thereby ensuring that all outstanding messages will be identical. Upon initialization, the ATU-C shall have no outstanding messages.

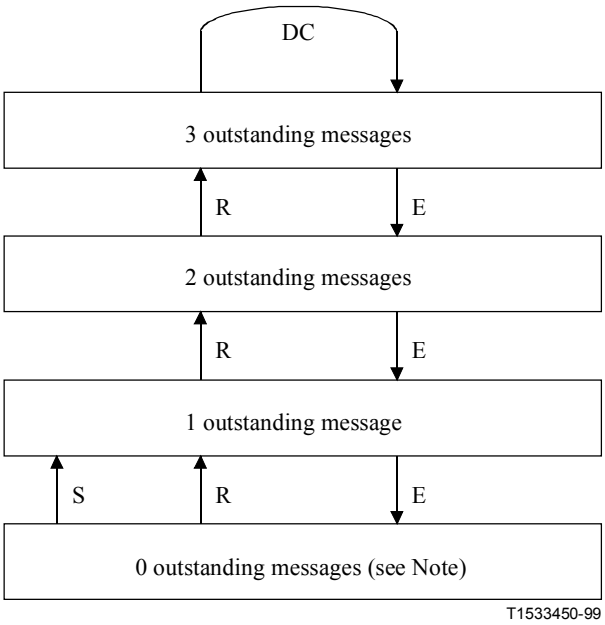

S Send new message
R Repeat last message
E EOC message received
DC Dummy code

NOTE – Immediately after initialization the ATU-C shall have no outstanding messages.

Figure 17/G.992.2 – ATU-C state diagram for outstanding eoc messages

For E, R, and S all the eoc messages with bit 5 set to 1_b shall be considered. Other eoc messages shall not cause a change of state in the eoc state machine.

Whenever there are three outstanding messages, the ATU-C shall stop sending messages and stuff the available eoc bandwidth with "no synchronization action " bytes or autonomous message bytes. Sending eoc messages may be resumed after receiving one or more acknowledgements (echoes) from the ATU-R. Only one command shall be outstanding at any time. Therefore, all outstanding eoc messages shall be identical. To deal with eoc messages that are not echoed by the ATU-R (e.g. those that are erased from the line due to impulse noise and will therefore remain outstanding), the ATU-C shall implement an adequate error recovery mechanism. This mechanism does not affect interoperability and is therefore outside the scope of this Recommendation.

IPR2025-00395
Petitioners' Exhibit 1012
Page 46 of 179

The eoc protocol state diagrams of the ATU-R and ATU-C shall be as shown in Figures 18 and 19.

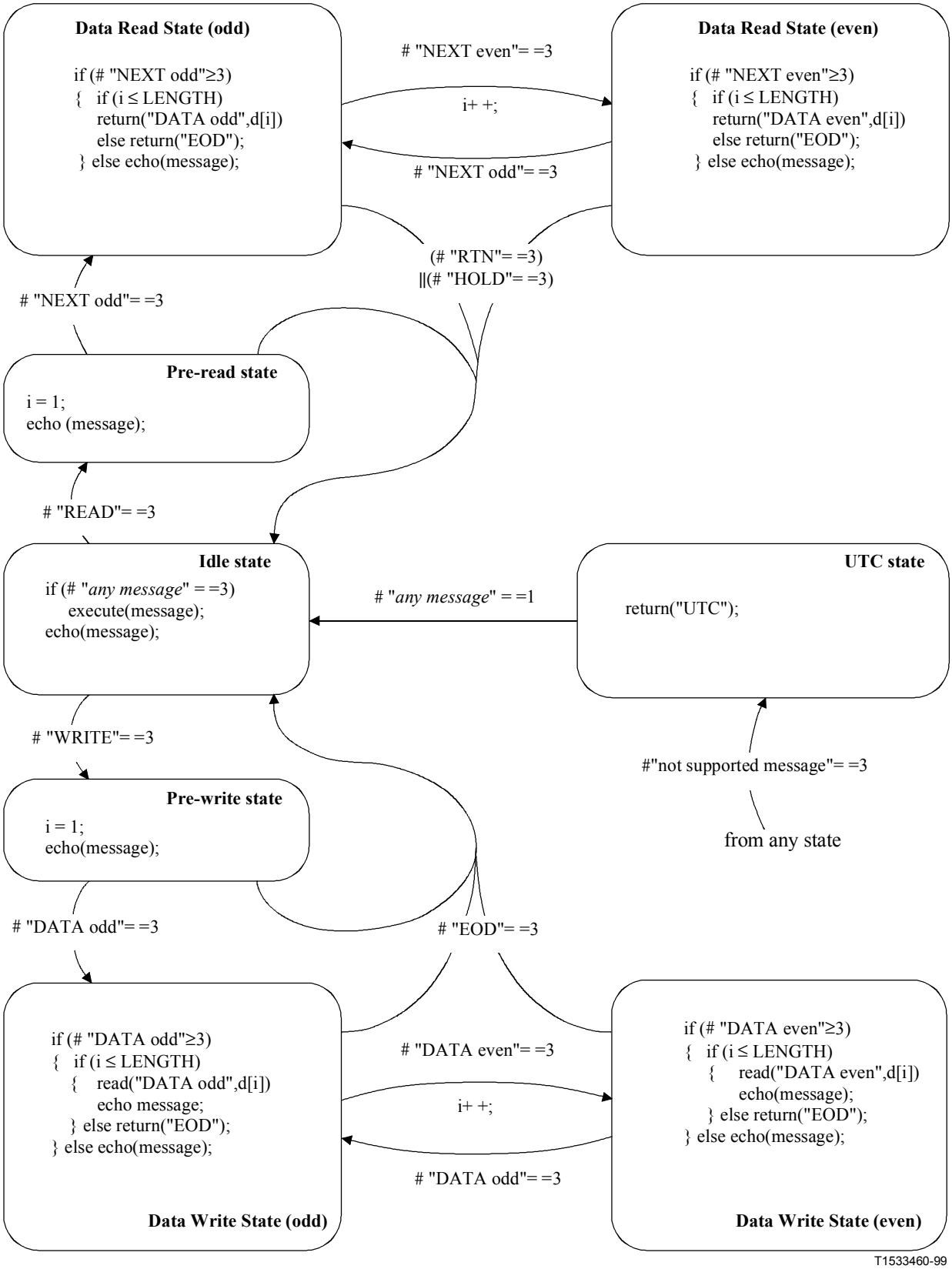

Figure 18/G.992.2 – eoc receiver state machine at ATU-R

IPR2025-00395
Petitioners' Exhibit 1012
Page 47 of 179

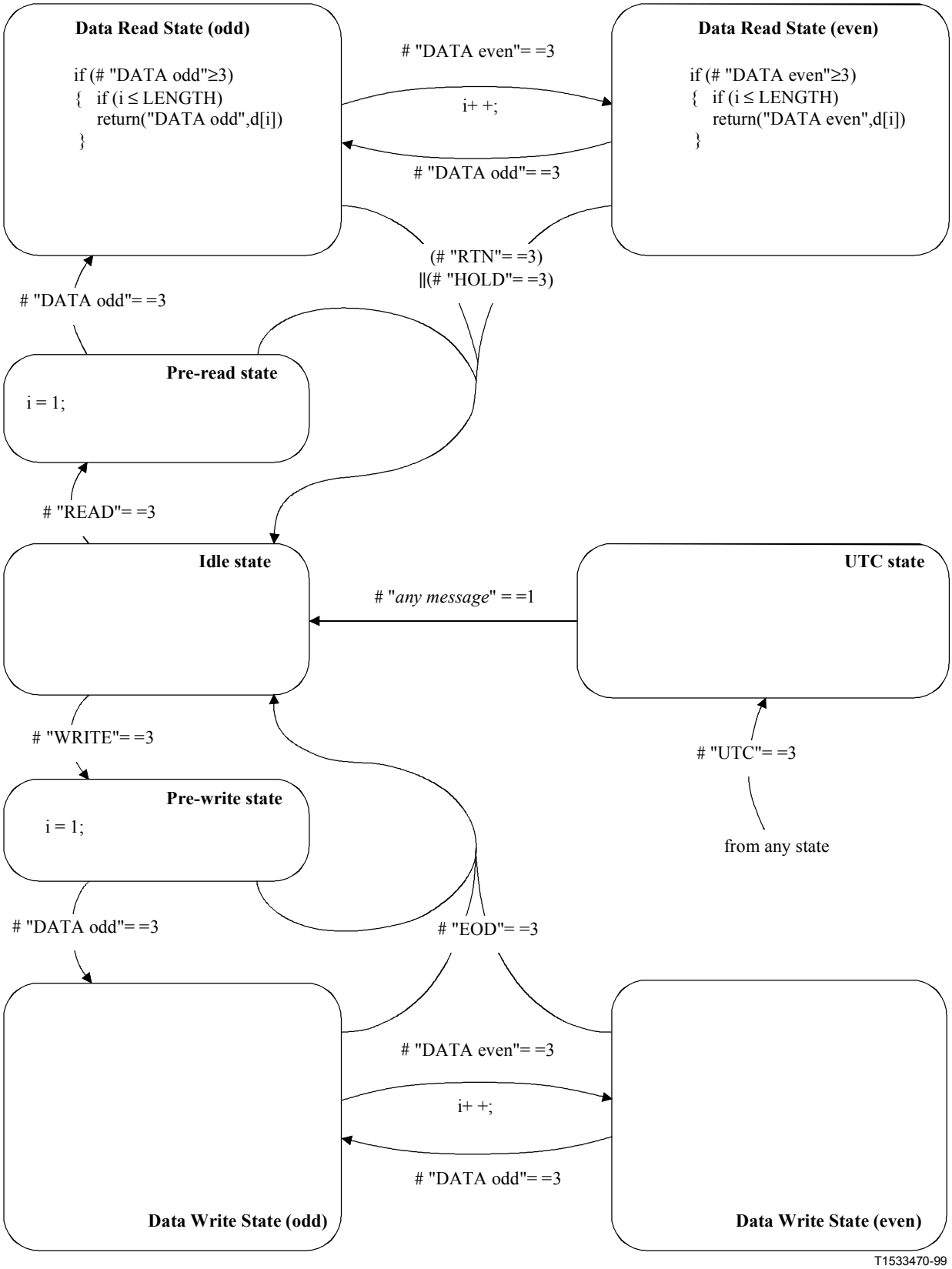

Figure 19/G.992.2 – eoc receiver state machine at ATU-C

IPR2025-00395
Petitioners' Exhibit 1012
Page 48 of 179

8.4.2 eoc state transitions

The following shall govern state changes as shown in Figures 18 and 19.

1) The protocol state changes are performed based on received messages. At the ATU-C, received messages are responses from the ATU-R to messages sent from the ATU-C. Depending on the ATU-C receiver protocol state, the ATU-C transmitter message set may be restricted. It is left up to the ATU-C transmitter to organize and send a sequence of message such that the right response from the ATU-R is achieved based on the receiver protocol state machines.

2) (#"message" = N) is true if and only if the previously received N messages are identical (i.e. all 13 bits equal) and properly addressed (i.e. having ATU-R address). (#"message" = 1) means the most recently received message is different (in at least 1 out of 13 bits) from the immediately preceding message and is properly addressed.

3) Moving to another state (based on the message received) shall be considered first, then the (same or new) state shall be executed. At the ATU-R, execution of commands in the Idle state shall be as described in 8.3 (invoking latching, unlatching or self test).

4) All the eoc messages with bit 5 set to 1_b shall be considered as received messages and cause an eoc response message at the ATU-R. Other eoc messages shall not cause a change of state in the eoc state machine and shall not cause an eoc response message at the ATU-R.

The responses allowed from the ATU-R fall into three categories:

1) message/echo-response protocol states: Idle State and EXE State;

2) message/Unable-to-Comply-response protocol state: UTC State;

3) message/data-response protocol states: Data Read States and Data Write States;

4) (Data Read States includes Pre-Read, Data Read odd and Data Read even states)

   (Data Write State includes Pre-Write, Data Write odd and Data Write even states).

Autonomous messages do not effect the eoc protocol states. The reception of the DGASP message at the ATU-C may however cause a reset at the ATU-C leading to an eoc state change at the ATU-C (e.g. to Idle State).

The eoc protocol shall enter the Message/Echo-response protocol state (Idle State) when the ATUs transition from the initialization and training sequence to steady state transmission. In order to cause the desired action in the ATU-R, the ATU-C shall repeat the message (without exceeding the limit of outstanding messages) until it receives three identical consecutive eoc message echoes from the ATU-R. This completes the command and response protocol, but the ATU-C may continue to send the same message thereafter. The command and response protocol for that message must be completed before a new message (containing a new command), which may induce a different protocol state in the ATU-R, may be issued.

At the ATU-R, depending on the state it is in, various restricted sets of eoc messages shall be acceptable. These sets shall be as shown in Table 16. Reception of other, inapplicable, messages shall result in an Unable to Comply (UTC) response to the ATU-C.

IPR2025-00395
Petitioners' Exhibit 1012
Page 49 of 179

Table 16/G.992.2 – eoc messages acceptable at the ATU-R

ATU-R state	eoc messages acceptable at the ATU-R			
Idle	All messages acceptable			
UTC	All messages acceptable			
Data pre-read	Read	NEXT odd	RTN	HOLD
Data read odd, even	NEXT odd	NEXT even	RTN	HOLD
Data pre-write	WRITE	DATA odd	EOD	
Data write odd, even	DATA odd	DATA even	EOD	

8.4.2.1 Message/Echo-response protocol state

This state is identical to the Idle state shown in Figures 18 and 19. To initiate an action at the ATU-R, the ATU-C shall begin sending eoc messages with the Data/opcode set to 1_b and with the appropriate message opcode in the information field.

The ATU-R shall initiate action when, and only when, three identical, consecutive, and properly addressed eoc frames that contain a message recognized by the ATU-R have been received. The ATU-R shall respond to all received messages. The response shall be an echo of the received ADSL eoc message. The combination of the ATU-C sending an ADSL eoc frame and the ATU-R echoing the frame back comprises the Message/Echo-response protocol state.

For the ATU-C to confirm correct reception of the message by the ATU-R, the message/echo-response ADSL eoc protocol state is repeated until the ATU-C receives three identical and consecutive echoes. This serves as an implicit acknowledgement to the ATU-C that the ATU-R has correctly received the transmitted message and is acting on it. This completes the Message/Echo-response protocol state.

The ATU-C continuously sends the activating message after the receipt of the three valid echoes, or alternatively, it may switch to sending the "Hold State" message. If the message was one of the latching commands, then the ATU-R shall maintain the commanded condition until the ATU-C issues the appropriate command that ends the specific latched condition or until the ATU-C issues the "Return to Normal" command (at which time all latched conditions in the ATU-R shall be terminated).

8.4.2.2 Message/Unable-to-Comply response protocol state

When the ATU-R does not support a message that it has received three times identically and consecutively, it shall respond with the Unable to Comply (UTC) ADSL eoc response message with its own address in lieu of a third identical and consecutive echo. In this manner the ATU-R will switch to the message/UTC-response protocol state.

The transmission by the ATU-R and reception by the ATU-C of three identical, consecutive, properly-addressed Unable to Comply messages constitutes notification to the ATU-C that the ATU-R does not support the requested function, at which time the ATU-C may abandon its attempt.

8.4.2.3 Data Read State

To read data from the ATU-R, the ATU-C shall issue a bidirectional READ eoc message to the ATU-R that specifies the register to be read.

The ATU-C shall then request the first byte to be sent from the ATU-R by sending "Next Byte" messages with bit 4 set to 1_b, indicating a request for an "odd" byte. The ATU-R shall respond to these "Next Byte" messages by echoing them until it has received three such messages consecutively, identically and properly addressed. Beginning with the third such reception, the ATU-R shall respond to the read request by sending the first byte of the register in the

IPR2025-00395
Petitioners' Exhibit 1012
Page 50 of 179

INFORMATION field of the "Next Byte" echo message. The ATU-C continues to send the "Next Byte" message and the ATU-R continues to respond with the "Next Byte" echo message containing the first byte of data in the INFORMATION field until the ATU-C has received at least three consecutive, identical and properly addressed data frames with bit 4 set to indicate "odd byte".

If there are more data to be read, the ATU-C shall request the second byte of data by sending "Next Byte" messages with bit 4 set to 0_b ("even byte"), repeating the procedure defined above for reading the first byte from the register.

The procedure using the "Next Byte" message continues for the third and all subsequent bytes with the value of bit 4 toggling from "odd byte" to "even byte" or vice versa, on each succeeding byte. Each time bit 4 is toggled, the ATU-R echoes for two correct frames, and starts sending the data frame on the third reception. The process ends only when all data in the register has been read.

To continue reading data, once the ATU-R is in the Data Read odd or even State, the only message that the ATU-C is allowed to send is the "Next Byte" message with bit 4 toggling. To end the data read state abnormally, the ATU-C sends either "Hold State" or "Return to Normal", depending on whether any latched states are to be retained. If the ATU-R receives any other message three times consecutively, identically and properly addressed while it is in Data Read odd or even State, it shall go into the UTC State.

If, after all bytes have been read from the ATU-R register, the ATU-C continues to send the "Next Byte" message with bit 4 toggled, then the ATU-R shall send an "End of Data" message (with bit 3 set to 1_b indicating opcode) beginning with the third such reception.

For the ATU-C, the data read state ends either when the ATU-C has received the last requested data byte three times consecutively, identically and properly addressed, or when the ATU-C has received three consecutive, identical and properly addressed "End of Data" messages with bit 3 set to 1_b. The ATU-C shall then switch itself and the ATU-R over to the Idle State with the "Hold State" or "Return to Normal" message, and the ATU-R shall release the register and leave the Data Read State after receiving three identical, consecutive and properly addressed "Hold State" or "Return to Normal" messages.

8.4.2.4 Data Write State

To write data to the ATU-R's memory, the ATU-C shall issue a bidirectional WRITE eoc message to the ATU-R that specifies the register to be written. When the ATU-R acknowledges with three consecutive, identical and properly addressed echo messages, the ATU-C sends the first byte of data by transmitting the DATA eoc message. The ATU-R shall acknowledge the receipt of the byte with an echo of the message. After the ATU-C is satisfied with three identical, consecutive and properly addressed echo responses, it shall start sending the next byte of data. Each time the ATU-C receives at least three identical and consecutive correct data echo responses, it shall switch to sending the next byte of data. It shall also toggle the "odd/even" bit accordingly. The ATU-C shall end the Data Write State with the EOD eoc message indicating to the ATU-R to return to the Idle State.

To continue writing data, once the ATU-R is in the Data Write odd or even State, the only message that the ATU-C is allowed to send is the DATA eoc message. If the ATU-R receives any other message three times consecutively, identically and properly addressed while it is in Data Write state, it shall go into the UTC state.

If, after all bytes have been written to the ATU-R register, the ATU-C continues to send a next byte of data, then the ATU-R shall send an EOD eoc message beginning with the third such reception.

IPR2025-00395
Petitioners' Exhibit 1012
Page 51 of 179

8.5 Clear eoc

Support of the autonomous data messages is mandatory. It provides the channel defined in 6.1/G.997. The channel is provided in both the upstream and the downstream direction by transmission of autonomous messages with eoc field settings as shown in Table 13.

These autonomous data messages may be transmitted from either the ATU-C or the ATU-R and are transparent to the current state of the eoc states machine. That is, these autonomous data messages transporting clear channel data can be inserted regardless of the current state of the eoc state machine. There is no requirement that these autonomous data messages be inserted contiguously. That is, other eoc messages may be inserted between any two autonomous data messages. There is also no requirement for any specific rate of insertion of autonomous data messages into the eoc.

When a clear eoc data byte is received, the byte payload is placed in a buffer on the receiving ATU. Assembly into PDUs is defined in Recommendation G.997.1.

The clear eoc does not support flow control. It is assumed that a higher level protocol implemented over this data path will support a flow control mechanism if required. Additionally, any system implementing a stack and application using the clear eoc (such as that defined in Recommendation G.997.1) should disable, at the higher layers, the further sending of autonomous data frames should a significant number of these higher layer messages be left without response from the receiver.

9 ADSL overhead channel

9.1 The ADSL Overhead Control (aoc) channel introduction

Thirty-two bytes are allocated per superframe for transmission of aoc data. The multiplexing of the aoc channel into the superframe is described in 7.3.3.1.1.2. The aoc channel is used for bit-swapping and fast retrain profile management. Bit swapping enables an ADSL system to change the number of bits assigned to a subcarrier, or change the transmit energy of a subcarrier without interrupting data flow. Fast retrain allows the ATU transceivers to quickly change transmission characteristics during changing line conditions.

All bit swap actions taken upon the ATU transceivers, after acknowledgement from the aoc channel, are coordinated between the ATU receiver and ATU transmitter by superframe counting.

9.1.1 Bit swap channel

The bit swap process uses the aoc channel. All bit swap messages shall be repeated five consecutive times over the aoc channel.

9.1.2 Superframe counting

The transceivers coordinate bit swapping at the receiver and transmitter by counting superframes. The ATU transmitters and receivers shall start superframe counters immediately upon entering SHOWTIME from either initialization or fast retrain.

Superframe counting starts with the first superframe at beginning of SHOWTIME being superframe 0. Each transmitter shall increment its counter after transmission of a superframe. Superframe counting is performed MOD 256 in both transmitter and receiver.

Synchronization of the corresponding transmitter and receiver superframe counters is maintained using the synchronization symbol in the superframe structure. Any form of restart that requires a transition from initialization or fast retrain to SHOWTIME shall reset the superframe counter.

IPR2025-00395
Petitioners' Exhibit 1012
Page 52 of 179

9.2 aoc message encoding

An aoc message consists of an aoc header and an aoc message field as shown in Figure 20.

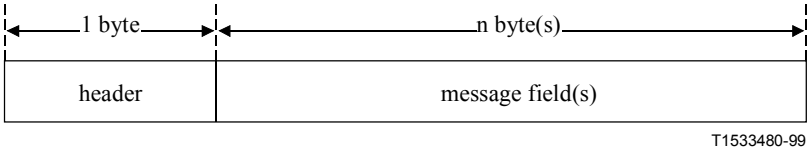

Figure 20/G.992.2 – aoc message encoding

9.2.1 aoc message header encoding

The type of aoc message is identified by an eight-bit header. Table 17 summarizes valid aoc message headers. For example, in the case of a bit swap, the aoc header binary 11111111_b will be detected, and the next byte of aoc data shall determine whether the message is a bit swap request or a bit swap acknowledge. A block of aoc header values (binary $1100xxxx_b$) is reserved for vendor-specific aoc messages.

Table 17/G.992.2 – aoc message headers

aoc message header	aoc message field total length including aoc message header (bytes)	Interpretation
00001111_b	Undefined	Reserved by ITU-T
$1100xxxx_b$	Undefined	Vendor-specific message
11110000_b	1	Unable to comply message (UTC)
11111100_b	13	Extended bit swap request message
11111111_b	9	Bit swap request message
11111111_b	3	Bit swap acknowledge message
00000011_b	3	Profile management request
00000011_b	3	Profile management acknowledge

The header byte values are given in binary format (MSB left, LSB right) and represent aoc7-aoc0 bits (MSB in bit 7, LSB in bit 0) as carried in the SB. All other bytes in the aoc message shall be mapped according to the same convention.

9.2.2 Profile Management Request

The Profile Management Request message (Table 18) is sent by the ATU-R (or ATU-C) to request the ATU-C (or ATU-R) to save the current settings in a profile. Allowed values for $yyyy_b$ are from 0000_b to 1111_b corresponding to profile 0 and profile 15 respectively.

IPR2025-00395
Petitioners' Exhibit 1012
Page 53 of 179

Table 18/G.992.2 – Format of the Profile Management Request message

Message header	Message field	
00000011_b (1 byte)	Command 00000001_b (1 byte)	Data $0000yyyy_b$ (1 byte)
Interpretation: Save current profile as profile n = $yyyy_b$		

9.2.3 Profile Management Acknowledge

The Profile Management Acknowledge message (Table 19) is sent by the ATU-C or ATU-R to acknowledge a Profile Management Request message from the ATU-R or ATU-C. The acknowledge message shall contain the same save profile number (n = $yyyy_b$) as in the corresponding Profile Management Request message. Allowed values for $xxxx_b$ and $yyyy_b$ are from 0000_b to 1111_b corresponding to profile 0 and profile 15 respectively.

Table 19/G.992.2 – Format of the Profile Management Acknowledgement message

Message header	Message field	
00000011_b (1 byte)	Command 00000010_b (1 byte)	Data $xxxxyyyy_b$ (1 byte)
Interpretation: Current profile saved as profile n = $yyyy_b$. Highest profile number supported is m = $xxxx_b$.		

If the ATU-C (or ATU-R) cannot perform the requested save operation (e.g. because of too high a requested n value), an UTC message shall be returned.

9.2.4 Bit swap request message encoding

This message tells the transmitter which subcarriers are to be modified. The format of the request is shown in Table 20.

Table 20/G.992.2 – Format of the bit swap request message

Message header	Message fields 1-4	
11111111_b (1 byte)	Command (1 byte)	Subcarrier index (1 byte)

The request shall comprise nine bytes as follows:

- An aoc message header consisting of eight binary ones.
- Message fields 1-4, each of which each consists of an eight-bit command followed by a related eight-bit subcarrier index. Valid eight-bit commands for the bit swap message shall be as shown in Table 21. The eight-bit subcarrier index is counted from low to high frequencies with the lowest frequency subcarrier having the number zero. The subcarrier index zero shall not be used.

IPR2025-00395
Petitioners' Exhibit 1012
Page 54 of 179

Table 21/G.992.2 – Bit swap request commands

Value	Interpretation
00000000_b	Do nothing
00000001_b	Increase the number of allocated bits by one
00000010_b	Decrease the number of allocated bits by one
00000011_b	Increase the transmitted power by 1 dB
00000100_b	Increase the transmitted power by 2 dB
00000101_b	Increase the transmitted power by 3 dB
00000110_b	Reduce the transmitted power by 1 dB
00000111_b	Reduce the transmitted power by 2 dB
$00001xxx_b$	Reserved for vendor-discretionary commands

To avoid g_i divergence between ATU-C and ATU-R after several bit swaps, for a g_i update of Δ dB the new g_i value should be given by:

$$g_i' = (1/512) \times \text{round}\,(512 \times g_i \times 10^{(\Delta/20)})$$

9.2.5 Extended bit swap request message encoding

Any on-line adaptation may be encoded in an extended bit swap request. However, because a single-bit subcarrier is not allowed, an extended bit swap request containing six fields shall be used when decreasing the number of bits on a subcarrier from two to zero, or when increasing the number of bits on a subcarrier from zero to two. The format of this extended bit swap request is similar to that of the bit swap request, but the number of message fields is increased to six, and a different message header is used. The format of the request is shown in Table 22.

Table 22/G.992.2 – Format of the extended bit swap request message

Message header	Message fields 1-6	
11111100_b (1 byte)	Command (1 byte)	Subcarrier index (1 byte)

The receiver shall initiate an extended bit swap by sending an extended bit swap request message to the transmitter. This request tells the transmitter which subcarriers are to be modified. The extended bit swap request message shall comprise 13 bytes as follows:

- an eight bit extended bit swap request message header of 11111100_b;
- six message fields, one to six, each of which is defined as in Table 22.

The receiver shall use two identical message fields to request a zero-to-two increase or a two-to-zero decrease of the number of bits on a subcarrier, according to the allowable bit-swap commands defined in Table 21.

9.2.6 Bit swap acknowledge message encoding

A bit swap acknowledge message (Table 23) shall contain the following:

- a bit swap acknowledge message header coded 11111111_b;

IPR2025-00395
Petitioners' Exhibit 1012
Page 55 of 179

- one message field, which consists of an eight-bit bit swap acknowledge command followed by an eight-bit superframe counter number. The acknowledge command shall be coded as 11111111_b. The superframe counter number indicates when the bit swap is to take place. This number shall be at least 47 greater than the counter number when the request was received (this corresponds to a minimum wait time of 800 ms).

The new bit and/or transmit power table(s) shall then take effect starting from the first frame (frame 0) of an ADSL superframe, after the specified superframe counter number has been reached. That is, if the bit swap superframe counter number contained in the bit swap acknowledge message is *n*, then the new table(s) shall take effect starting from frame 0 of the (*n* + 1)th ADSL superframe.

Table 23/G.992.2 – Format of the bit swap acknowledge

Message header	Message field	
11111111_b (1 byte)	Acknowledge command 11111111_b (1 byte)	Bit swap superframe Counter number *n* (1 byte)

9.3 Bit swap operation

Either ATU may initiate a bit swap by transmitting the bit swap request message. The bit swapping procedures in the upstream and downstream channels are independent, and may take place simultaneously.

An ATU receiver is the initiator of a bit swap procedure. It may transmit a bit swap (extended or simple) request message and receives the bit swap acknowledge message. The ATU transmitter responds to the reception of a bit swap request message and shall transmit either the bit swap acknowledge or the Unable to Comply message.

9.3.1 Bit swap – Receiver

The receiver shall start a time-out of 500 ± 20 ms from the moment it sends a bit swap request message. When neither an acknowledgement nor an UTC message has been detected in this time-out interval, the receiver shall resend a bit swap request message (which shall have the same parameters) and restart the timeout. Only when an acknowledgement has been detected within the time-out interval shall the receiver prepare for a bit swap at the time specified in the acknowledge message.

The receiver shall then wait until the superframe counter equals the value specified in the bit swap acknowledge message. Then, beginning with frame 0 of the next ADSL superframe, the receiver shall change the bit assignment of the appropriate subcarriers and perform tone reordering based on the new subcarrier bit assignment and update applicable receiver parameters of the appropriate subcarriers to account for a change in their transmitted energy.

Upon time-out, the bit swap message shall be re-transmitted. However, after a finite (implementation dependent) number of unsuccessful retries, the receiver shall take recovery actions to restore the aoc channel.

A new bit swap request shall only be sent after the previous bit swap has taken place or has been denied by a UTC message or when the 500 ± 20 ms time-out has occurred while waiting for a bit swap acknowledge.

IPR2025-00395
Petitioners' Exhibit 1012
Page 56 of 179

9.3.2 Bit swap – Transmitter

Within 400 ms after reception of the bit swap request, the transmitter shall send either a bit swap acknowledge message or a UTC (Unable to Comply) message. The transmitter should and is recommended to send the bit swap acknowledge message in case the aoc protocol is operating in a reliable environment e.g. with a filter as shown in this Recommendation's reference model or a splitter as shown in the Recommendation G.992.1 reference model. In other cases, the transmitter may send a UTC message. Mandating the transmitter to send a bit swap acknowledge message is for further study.

After transmitting the bit swap acknowledge, the transmitter shall wait until the superframe counter equals the value specified in the bit swap acknowledge. Then, beginning with DF 0 of the next ADSL superframe, the transmitter shall change the bit assignment of the appropriate subcarriers, and perform tone re-ordering based on the new subcarrier bit assignment and change the transmit energy in the appropriate subcarriers by the desired factor.

If the transmitter receives a new bit swap request message while waiting for the superframe counter to equal the value specified in the last bit swap acknowledge message, it shall immediately stop waiting and update the superframe counter for bit swap according to the new message. It shall restart the process for the newly arrived bit swap request message assuming that the new message equals the previous.

9.4 aoc protocol

When the aoc channel is idle, i.e. there are no aoc messages to be transported, the aoc shall insert 00000000_b as a stuffing pattern in the aoc SB bytes. Hence, an aoc message begins with a non-zero byte.

aoc messages shall be transmitted five consecutive times (i.e. five concatenated and identical messages without aoc stuffing patterns in between) for extra reliability. At least 20 aoc stuffing patterns shall be inserted between two consecutive groups of five concatenated and identical messages.

An ATU receiving an aoc message shall act on that aoc message only if it has received three identical messages in a time period spanning five of that particular message. When an ATU receives an unrecognizable command, it shall take no action.

In the case when a function is requested but cannot be performed by either the ATU-C or the ATU-R for any reason (e.g. to save a profile with profile number greater than support) an unable to comply message ("11110000_b") shall be issued.

There shall be a maximum of one downstream and one upstream aoc message outstanding at any time.

10 In-service performance monitoring and surveillance

The following terminology is used in this clause for description of the in-service performance monitoring and surveillance functions (see Figure 21):

- *Near-end*: Near-end means performance of the loop-side received signal at the input of the ATU.
- *Far-end*: Far-end means performance of the downstream loop-side received signal at the input of the ATU-R, where this performance is reported to the ATU-C in upstream indicator bits or performance of the upstream loop-side received signal at the input of the ATU-C, where this performance is reported to the ATU-R in downstream overhead indicator bits; this case is a mirror image of the above.

IPR2025-00395
Petitioners' Exhibit 1012
Page 57 of 179

- *Primitives*: Primitives are basic measures of performance, usually obtained from digital signal line codes and frame formats, or as reported in overhead indicator bits from the far-end. Performance primitives are categorized as events, anomalies and defects. Primitives may also be basic measures of other quantities (e.g. ac or battery power), usually obtained from equipment indicators.
- *Anomalies*: An anomaly is a discrepancy between the actual and the desired characteristics of an item. The desired characteristics may be expressed in the form of a specification. An anomaly may or may not affect the ability of an item to perform a required function. Performance anomalies are defined in 10.1.
- *Defects*: A defect is a limited interruption in the ability of an item to perform a required function. It may or may not lead to maintenance action depending on the results of additional analysis. Successive anomalies causing a decrease in the ability of an item to perform a required function are considered as a defect.
- *Thresholds*: See clause 8/G.997.1.
- *Threshold Crossing Alert*: See Recommendation G.997.1.
- *Indicator*: An indicator is the message or bits that are transmitted from the ATU-R to signal a far-end primitive anomaly or defect.

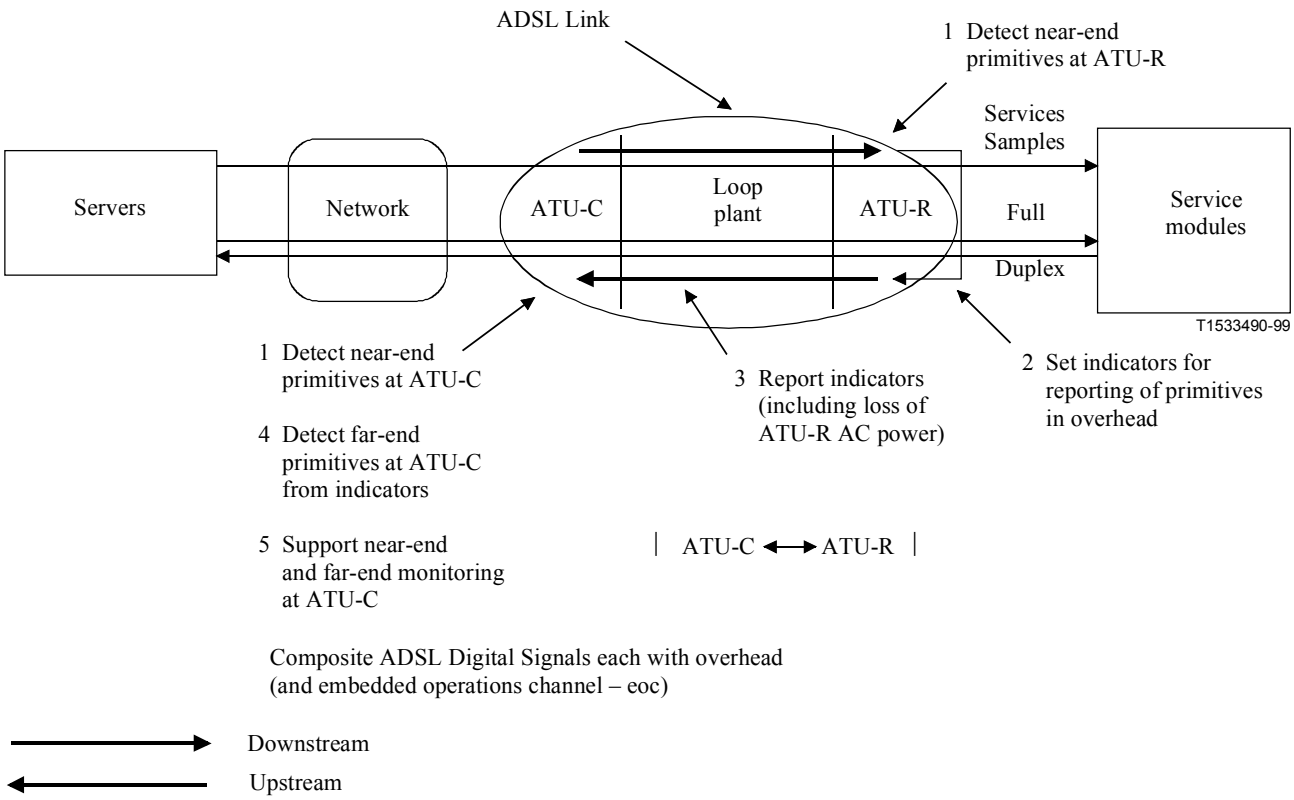

Figure 21/G.992.2 – In-service surveillance of the ADSL link shown from the standpoint of the ATU-C

ADSL systems have been designed to deliver packet-/cell-based payloads. The performance monitoring capabilities required to maintain those systems are imbedded within the packet/cell systems. The ADSL system shall support the data path monitoring requirements as required by the specific payload technology.

IPR2025-00395
Petitioners' Exhibit 1012
Page 58 of 179

10.1 ADSL line related primitives

10.1.1 ADSL line related near-end anomalies

Two near-end anomalies are defined:

- *Forward error correction (fec)-i*: An fec-i anomaly occurs when a received FEC codeword for the data stream indicates that errors have been corrected;
- *Cyclic redundancy check (crc)-i*: A crc-i anomaly occurs when a received CRC-8 code for the superframe is not identical to the corresponding locally generated code.

10.1.2 ADSL line related far-end anomalies

Two far-end anomalies are defined:

- *Far-end forward error correction (ffec)-i*: An ffec-i anomaly is an fec-i anomaly detected at the far-end that is reported once per superframe by the fecc-i indicator bit. The fecc-i indicator bit shall be set to 1_b to indicate that no fec-i anomaly is present in the previous superframe and shall be set to 0_b to indicate that at least one fec-i anomaly is present in the previous superframe. An ffec-i anomaly occurs when a received fecc-i indicator bit is coded to 0_b. A ffec-i anomaly terminates when a received fecc-i indicator bit is coded to 1_b.
- *Far-end Block Error (febe-i) anomaly*: A febe-i anomaly is a crc-i anomaly detected at the far-end and is reported once per superframe by the febe-i indicator bit. The febe-i indicator shall be set to 1_b to indicate that no crc-i anomaly is present in the previous superframe and shall be set to 0_b to indicate that a crc-i anomaly is present in the previous superframe. A febe-i anomaly occurs when a received febe-i indicator is coded to 0_b. A febe-i anomaly terminates when a received febe-i indicator is coded to 1_b.

10.1.3 ADSL line related near-end defects

Two near-end defects are defined:

- *Loss of signal (los)*: A reference power is established by averaging the ADSL power over a 0.1 s period and over a subset of tones after the start of steady state data transmission (i.e. after initialization), and a threshold shall be set at 6 dB below this. A los defect occurs when the level of the received ADSL power, averaged over a 0.1 s period and over the same subset of tones, is lower than the threshold, and terminates when measured in the same way it is at or above the threshold. The subset of tones over which the ADSL power is averaged, is implementation discretionary and may be restricted at the ATU-R to only the downstream pilot tone.
- *Severely errored frame (sef)*: An sef defect occurs when the content of two consecutively received synchronization symbols does not correlate with the expected content over a subset of the tones. An sef defect terminates when the content of two consecutively received synchronization symbols correlate with the expected contents over the same subset. The correlation method, the selected subset of tones, and the threshold for declaring these defect conditions are implementation discretionary.

10.1.4 ADSL line related far-end defects

Two far-end defects are defined:

- *Far-end Loss of signal (los)*: A far-end los defect is a los defect detected at the far-end and is reported by the los indicator bit. The los indicator bit shall be set to 1_b to indicate that no los defect is being reported and shall be set to 0_b for six consecutive superframes to indicate that a los defect is being reported. A far-end los defect occurs when four or more out of six

IPR2025-00395
Petitioners' Exhibit 1012
Page 59 of 179

contiguous los indicators are received coded as 0_b. A far-end los defect terminates when four or more out of six contiguously received los indicators are coded as 1_b.

- *Far-end Remote defect indication (rdi)*: An rdi defect is a sef defect detected at the far-end and is reported once per superframe by the rdi indicator bit. The rdi indicator bit shall be set to 1_b to indicate that no sef defect is present in the previous superframe and shall be set to 0_b to indicate that a sef defect is present in the previous superframe. An rdi defect occurs when a received rdi indicator is coded as 0_b. An rdi defect terminates when a received rdi indicator is coded as 1_b.

10.2 ATM data path related primitives

10.2.1 ATM data path related near-end anomalies

Three near-end anomalies are defined:

- *No Cell Delineation (ncd-i) anomaly*: An ncd-i anomaly occurs immediately after ATM Cell TC start-up when ATM data are allocated to the data buffer and as long as the cell delineation process operating on this data is in the HUNT or PRESYNC state. Once cell delineation is acquired, subsequent losses of cell delineation shall be considered ocd-i anomalies.
- *Out of Cell Delineation (ocd-i) anomaly*: An ocd-i anomaly occurs when the cell delineation process operating on these data transitions from SYNC to HUNT state. An ocd-i anomaly terminates when the cell delineation process transitions from PRESYNC to SYNC state or when the lcd-i defect maintenance state is entered.
- *Header Error Check (hec-i) anomaly*: An hec-i anomaly occurs when an ATM cell header error check fails on the interleaved data.

10.2.2 ATM data path related far-end anomalies

Three far-end anomalies are defined:

- *Far-end No Cell Delineation (fncd-i) anomaly*: An fncd-i anomaly is a ncd-i anomaly detected at the far-end and is reported once per superframe by the ncd-i indicator bit. The ncd-i indicator bit shall be set to 1_b to indicate no ncd-i anomaly or ocd-i anomaly or lcd-i defect is present in the previous superframe and shall be set to 0_b to indicate that at least one ncd-i anomaly or ocd-i anomaly or lcd-i defect is present in the previous superframe. An fncd-i anomaly occurs immediately after ATU start-up and terminates if a received ncd-i indicator is coded as 1_b.
- *Far-end Out of Cell Delineation (focd-i) anomaly*: An focd-i anomaly is an ocd-i anomaly detected at the far-end and is reported once per superframe by the ncd-i indicator. An focd-i anomaly occurs if no fncd-i anomaly is present and a received ncd-i indicator bit is coded as 0_b. A focd-i anomaly terminates if a received ncd-i indicator bit is coded set to 1_b.
- *Far-end Header Error Check (fhec-i) anomaly*: An fhec-i anomaly is an hec-i anomaly detected at the far-end and is reported once per superframe by the hec-i indicator. The hec-i indicator shall be set to 1_b to indicate that no hec-i anomaly is present in the previous superframe and shall be set to 0_b to indicate that at least one hec-i anomaly is present in the previous superframe. An fhec-i anomaly occurs when a received hec-i indicator bit is coded as 0_b. An fhec-i anomaly terminates when a received hec-i indicator is coded as 1_b.

NOTE – The hec-i anomalies are reported once per superframe. This results in a low granularity of hec anomaly reporting since hundreds of ATM cells may be received over a one superframe time period.

IPR2025-00395
Petitioners' Exhibit 1012
Page 60 of 179

10.2.3 ATM data path related near-end defects

One near-end defect is defined:

- *Loss of Cell Delineation (lcd-i) defect*: An lcd-i defect occurs when at least one ocd-i anomaly is present in each of four consecutive superframes and no sef defect is present. An lcd-i defect terminates when no ocd-i anomaly is present in four consecutive superframes.

10.2.4 ATM data path related far-end defects

One far-end defect is defined:

- *Far-end Loss of Cell Delineation (flcd-i) defect*: An flcd-i defect is an lcd-i defect detected at the far-end and is reported by the ncd-i indicator bit. An flcd-i defect occurs when an focd-i anomaly is present and four consecutively received ncd-i indicators are coded 0_b and no rdi defect is present. An flcd-i defect terminates if four consecutively received ncd-i indicators are coded as 1_b.

10.3 Other ADSL indicators, parameters and signals

10.3.1 Other near-end primitives

One near-end primitive is defined:

- *Loss-of-power (lpr):* An lpr primitive occurs when the ATU electrical supply (mains) power drops to a level equal to or below the manufacturer-determined minimum power level required to ensure proper operation of the ATU. An lpr primitive terminates when the power level exceeds the manufacturer-determined minimum power level.

10.3.2 Other far-end primitives

One far-end primitive is defined:

- *Far-end Loss-of-power (lpr)*: A far-end lpr primitive is an lpr primitive detected at the far-end and is reported by the lpr indicator. The lpr indicator shall be coded with emergency priority in the next six available outgoing eoc messages (see the eoc protocol for "dying gasp". A far-end lpr primitive occurs when an lpr indicator is received. A far-end lpr primitive terminates if for a period of 0.5 s no lpr indicator is received and no near-end los defect is present. The condition for an lpr indicator being received is defined in the eoc protocol for "dying gasp".

10.3.3 Failure count parameters

The ATU-C shall provide near-end and far-end failure counters for each near-end and far-end failure defined in Recommendation G.997.1. The ATU-R may optionally provide near-end and far-end failure counters. See Recommendation G.997.1.

A particular failure count is the number of occurrences of a particular failure event, where a failure event occurs when the failure is declared, and ends when the failure clears.

10.4 Test parameters

The attenuation (ATN) and signal-to-noise ratio (SNR) margin test parameters apply to on-demand test requests; e.g. to check for adequate physical media performance margin at acceptance and after repair verification, or at any other time following the execution of initialization and training sequence of the ADSL system. ATN and SNR, as measured by the receivers at both the ATU-C and the ATU-R shall be externally accessible from the ATU-C, but they are not required to be continuously monitored. They are made available on demand as defined in 8.3.

IPR2025-00395
Petitioners' Exhibit 1012
Page 61 of 179

10.4.1 Near-end test parameters

The following near-end test parameters shall be provided at the ATU-C and the ATU-R:

- **Attenuation (ATN)**: The attenuation is the difference in dB between the power received at the near-end and that transmitted from the far-end. Received signal power in dBm is the sum of all data-carrying (i.e. $b_i > 0$) DMT subcarrier powers averaged over a 1 s period. Transmitted signal power is $-3.65 - 2n + 10\log(\Sigma g_i^2)$ dBm, summed over the data-carrying subcarriers. The attenuation ranges from 0 to 63.5 dB with 0.5 dB steps.
- **Signal-to-Noise Ratio (SNR) margin**: The signal-to-noise ratio margin represents the amount of increased received noise (in dB) relative to the noise power that the system is designed to tolerate and still meet the target BER of 10^{-7}, accounting for all coding (e.g. trellis coding, RS FEC) gains included in the design. The SNR margin ranges from −64.0 dB to +63.5 dB with 0.5 dB steps.

10.4.2 Far-end test parameters

The following far-end test parameters shall be provided at the ATU-C:

- **Far-end Attenuation (ATN)**: The far-end attenuation is the attenuation measured at the far-end. It can be read from the EOC ATN register using the EOC command set (see 8.3.5). The EOC ATN register shall be coded as an unsigned integer, ranging from 0 to 127, corresponding to a 0 to 63.5 dB attenuation (0.5 dB steps).
- **Far-end Signal-to-Noise Ratio (SNR) margin**: The far-end signal-to-noise ratio margin is the signal-to-noise ratio margin measured at the far-end. It can be read from the EOC SNR register using the EOC command set (see 8.3.5). The EOC SNR register shall be coded as a twos complement signed integer, ranging from −128 to +127, corresponding to a −64 to +63.5 dB signal-to-noise ratio margin (0.5 dB steps).

10.5 Other failures and parameters

Other failure, performance monitoring functions, network element configuration, test, diagnostic and status parameters are defined in Recommendation G.997.1.

11 Initialization

11.1 Overview

11.1.1 Basic functions of initialization

ADSL transceiver initialization is required in order for a physically connected ATU-R and ATU-C pair to establish a communications link. The timeline of Figure 22 provides an overview of the procedure. The first part of initialization is the Handshake procedure which is specified in Recommendation G.994.1.

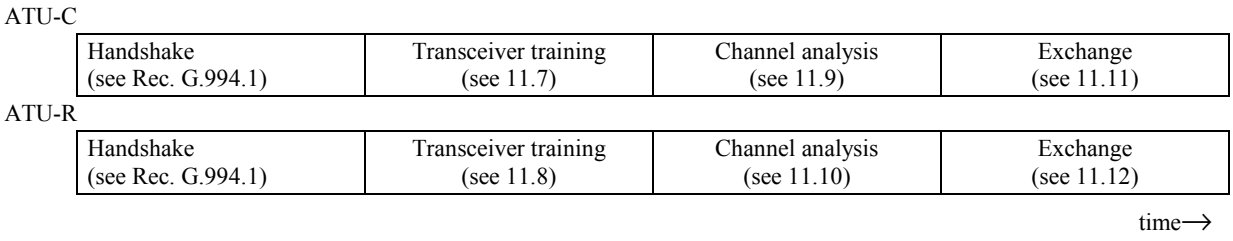

Figure 22/G.992.2 – Overview of initialization

IPR2025-00395
Petitioners' Exhibit 1012
Page 62 of 179

In subsequent parts of the initialization, in order to maximize the throughput and reliability of this link, ADSL transceivers shall determine certain relevant attributes of the connecting channel and establish transmission and processing characteristics suitable to that channel. During initialization each receiver can determine the relevant attributes of the channel through the transceiver training and channel analysis procedures. Certain processing and transmission characteristics can also be established at each receiver during this time. During the exchange process each receiver shares with its corresponding far-end transmitter certain transmission settings that it expects to see. Specifically, each receiver communicates to its far-end transmitter the number of bits and relative power levels to be used on each DMT subcarrier, as well as any messages and final data rates information. For highest performance these settings should be based on the results obtained through the transceiver training and channel analysis procedures.

Determination of channel attribute values and establishment of transmission characteristics requires that each transceiver produces, and appropriately responds to, a specific set of precisely-timed signals. This subclause describes these initialization signals, along with the rules that determine the proper starting and ending time for each signal. This description is made through the definition of initialization signalling states in which each transceiver will reside, and the definition of initialization signals that each transceiver will generate. A state and the signal generated while in that state have the same name, which may sometimes, for clarity, be prefixed by "state" or "signal".

The sequence of generated downstream and upstream states/signals for a successful initialization procedure is shown by the time-lines of Figures 24 to 26. Details of the timing of the states are shown in Figure 27. The dashed arrows indicate that the change of state in the ATU at the head of the arrow is caused by a successful reception of the last signal shown in the box at the base of the arrow. For example, in Figure 25, the ATU-R stays in state R-REVERB3 until it finishes receiving C-CRC2, at which point it moves on to R-SEGUE2 after an appropriate delay (see 11.10.2).

NOTE – The figures show the sequence of events in a successful initialization.

The description of a signal will consist of three parts:

1) The first part is a description of the voltage waveform that the transmitter shall produce at its output when in the corresponding state. The output voltage waveform of a given initialization signal is described using the DMT transmitter reference model shown in Figure 2.

2) The second is a statement of the required duration, expressed in DMT symbol periods, of the signal. This signal duration may be a constant or may depend upon the detected signalling state of the far-end transceiver. The duration of a single DMT symbol period depends on whether the cyclic prefix is being used; some initialization signals contain a cyclic prefix, and some do not. ATU-C signals up to and including C-SEGUE1 are transmitted without a cyclic prefix; those from C-RATES1 on are transmitted with a prefix. Similarly, ATU-R signals up to and including R-SEGUE1 do not use a prefix; those from R-REVERB3 onward do. The duration of any signal in seconds is therefore the defined number of DMT symbol periods times the duration of the DMT symbol being used.

3) The third part of a signal's description is a statement of the rule specifying the next state.

11.1.2 Transparency to methods of separating upstream and downstream signals

Manufacturers may choose to implement this Recommendation using either non-overlapped spectrum mode (Annex A), or overlapped spectrum mode (Annex B). The initialization procedure described here ensures compatibility between these different implementations by specifying all upstream and downstream control signals to be in the appropriate, but narrower, frequency bands that would be used by an non-overlapped transceiver, and by defining a time period during which an overlapped spectrum transceiver can train its echo canceller.

IPR2025-00395
Petitioners' Exhibit 1012
Page 63 of 179

11.1.3 Initialization Reset Procedure

If errors or malfunctions are detected or timeout limits are exceeded at various points in the initialization sequence, an Initialization Reset Procedure shall be executed. An ATU executes an Initialization Reset Procedure by transitioning to Recommendation G.994.1. An ATU-R invoking the Initialization Reset Procedure shall transition to R-SILENT0. An ATU-C invoking the Initialization Reset Procedure shall transition to C-SILENT1.

If errors occur during SHOWTIME, an Initialization Reset Procedure may also be invoked.

11.2 Handshake – ATU-C

The detailed procedures for handshake at the ATU-C are defined in Recommendation G.994.1. An ATU-C, after power-up, loss of signal, recovery from errors during the initialization procedure, Fast Retrain request abort, Fast Retrain truncate, Fast Retrain unknown profile, events that trigger power management transitions requiring the initialization procedure or optional self test, shall enter the initial G.994.1 state C-SILENT1. The ATU-C may transition to the Initialization Reset Procedure under instruction from the network. From either state, operation shall proceed according to the procedures defined in Recommendation G.994.1.

If the G.994.1 procedures select this Recommendation as the mode of operation, the ATU-C shall transition to state C-QUIET2 at the conclusion of G.994.1 operation.

If the G.994.1 procedures select "Escape to Fast Retrain" as the mode of operation, the ATU-C shall transition to state C-QUIET-EF1 at the conclusion of G.994.1 operation.

An ATU-C wishing to indicate G.992.2 capabilities during in a G.994.1 CL message shall do so by setting to 1_b at least one of the Level 1 {SPar(1)} G.992.2 bits as defined in Table 11/G.994.1. For each Level 1 {SPar(1)} bit for G.992.2 set to 1_b, a corresponding {NPar(2)} field shall also be present. The {NPar(2)} field corresponding to the "G.992.2 – A/B" Level 1 bit is defined in Table 11-g/G.994.1. The {NPar(2)} field corresponding to the "G.992.2 – Annex C" Level 1 bit is defined in Table 11-i/G.994.1. The Level 2 bits have the following definitions in a CL message:

R-ACK1	Always set to 1_b in a CL message. Signifies that the ATU-C is capable of sending C-PILOT1A, C-QUIET3A, C-PILOT2 and C-QUIET5 during transceiver training.
R-ACK2	Always set to 1_b in a CL message. Signifies that the ATU-C is capable of sending C-PILOT1, C-PILOT2 and C-PILOT3 during transceiver training.
RS16	Set to 1_b if the ATU-C transmitter and receiver have the capability to use Reed-Solomon parameters R = 16 and S = 16.
Fast Retrain	Always set to 1_b in a CL message.
EOC Clear OAM	If set to 1_b, signifies that the ATU-C supports transmission and reception of G.997.1 OAM frames.
DBM	If set to 0_b, this bit shall indicate Bitmap-NR and Bitmap-NC are enabled (Dual Bitmap mode) and are used to transmit data. If set to 1_b, this bit shall indicate Bitmap-NR and Bitmap-NC are disabled (FEXT Bitmap mode), i.e. only Bitmap-FR and Bitmap-FC are used to transmit data by ATU-C and ATU-R respectively. This mode selection shall be only performed by the ATU-C. If it is set to 1_b in a CL message, it must be set to 1_b in subsequent MS messages from either the ATU-C or ATU-R.

IPR2025-00395
Petitioners' Exhibit 1012
Page 64 of 179

An ATU-C selecting a G.992.2 mode of operation in a G.994.1 MS message shall do so by setting to 1_b the appropriate of the Level 1 {SPar(1)} G.992.2 bit as defined in Table 11/G.994.1. For each level 1 {Spar(1)} bit for G.992.2 set to 1_b, a corresponding {Npar(2)} field shall also be present. The {NPar(2)} field corresponding to this bit, as defined in Table 11-h/G.994.1 or Table 11-i/G.994.1, shall also be present in the message. The Level 2 bits have the following definitions in an MS message from the ATU-C:

R-ACK1	Signifies that the ATU-C shall send C-PILOT1A, C-QUIET3A, C-PILOT2 and C-QUIET5 during transceiver training.
R-ACK2	Signifies that the ATU-C shall send C-PILOT1, C-PILOT2 and C-PILOT3 during transceiver training.
RS16	Set to 1_b if and only if RS16 was set to 1_b in both the last previous CL message and the last previous CLR message. It signifies the capability to use Reed-Solomon parameters R = 16 and S = 16 is available in both the upstream and downstream direction.
Fast Retrain	Signifies that the ATU-C requires the ATU-R to start an escape to Fast Retrain procedure.
EOC Clear OAM	Set to 1_b, if and only this bit was set to 1_b in both the last previous CL message and the last previous CLR message. Signifies that both ATU-C and ATU-R may transmit and receive G.997.1 OAM frames.
DBM	If set to 0_b, this bit shall indicate Bitmap-NR and Bitmap-NC are enabled (Dual Bitmap mode) and are used to transmit data. If set to 1_b, this bit shall indicate Bitmap-NR and Bitmap-NC are disabled (FEXT Bitmap mode), i.e. only Bitmap-FR and Bitmap-FC are used to transmit data by ATU-C and ATU-R respectively. This mode selection shall be only performed by ATU-C. This bit shall be set to 1_b E if it was set to 1_b in a previous CL message.

One and only one of the bits R-ACK1 and R-ACK2 shall be set to 1_b in an MS message sent from the ATU-C. If both bits are enabled in the CL and CLR message, the R-ACK1 or R-ACK2 selection is at the ATU-C's discretion.

11.3 Handshake – ATU-R

The detailed procedures for handshake at the ATU-R are defined in Recommendation G.994.1. An ATU-R, after power-up, loss of signal, errors during the initialization procedure, fast retrain request abort, fast retrain truncate, fast retrain unknown profile, events that trigger power management transitions requiring the initialization procedure, or optional self test, shall enter the initial G.994.1 state R-SILENT0. Upon command from the host controller, the ATU-R shall initiate handshaking by invoking the Initialization Reset Procedure. Operation shall then proceed according to the procedures defined in Recommendation G.994.1.

If the G.994.1 procedures select this Recommendation as the mode of operation, the ATU-R shall transition to state R-QUIET2 at the conclusion of G.994.1 operation.

If the G.994.1 procedures select "Escape to Fast Retrain" as the mode of operation, the ATU-R shall transition to state R-QUIET-EF1 at the conclusion of G.994.1 operation.

IPR2025-00395
Petitioners' Exhibit 1012
Page 65 of 179

An ATU-R wishing to indicate G.992.2 capabilities in a G.994.1 CLR message shall do so by setting to 1_b at least one of the Level 1 {SPar(1)} G.992.2 bits as defined in Table 11/G.994.1. For each Level 1 {SPar(1)} bit for G.992.2 set to ONE, a corresponding {NPar(2)} field shall also be present. The {NPar(2)} field corresponding to the "G.992.2 – A/B" Level 1 bit is defined in Table 11-g/G.994.1. The {NPar(2)} field corresponding to the "G.992.2 – Annex C" Level 1 bit is defined in Table 11-i/G.994.1. The Level 2 bits have the following definitions in a CLR message:

R-ACK1	Signifies that the ATU-R is capable of interworking with ATU-Cs which send C-PILOT1A, C-QUIET3A, C-PILOT2, and C-QUIET5 during transceiver training (see 11.7.3, 11.7.4, 11.7.6 and 11.7.9).
R-ACK2	Signifies that the ATU-R is capable of interworking with ATU-Cs which send C-PILOT1, C-PILOT2, and C-PILOT3 during transceiver training (see 11.7.2, 11.7.6 and 11.7.10).
RS16	Set to 1_b id the ATU-R transmitter and receiver has the capability to use Reed-Solomon parameters R = 16 and S = 16.
Fast Retrain	Always set to 1_b in a CLR message.
EOC Clear OAM	If set to 1_b, signifies that the ATU-R support transmission and reception of G.997.1 OAM frames.
DBM	This bit shall echo the setting of the CL message, or this bit shall be ignored.

Either R-ACK2, R-ACK1, or both shall be set to 1_b in a CLR message.

An ATU-R selecting a G.992.2 mode of operation in a G.994.1 MS message shall do so by setting to 1_b the appropriate of the Level 1 {SPar(1)} G.992.2 bit as defined in Table 11/G.994.1. For each Level 1 {SPar(1)} bit for G.992.2 set to 1_b, a corresponding {NPar(2)} field shall also be present. The {NPar(2)} field corresponding to this bit, as defined in Table 11-g/G.994.1 or Table 11-i/G.994.1, shall also be present in the message. The Level 2 bits have the following definitions in an MS message from the ATU-R:

R-ACK1	Signifies that the ATU-R requires the ATU-C to send C-PILOT1A, C-QUIET3A, C-PILOT2, and C-QUIET5 during transceiver training (see 11.7.3, 11.7.1, 11.7.6 and 11.7.9)
R-ACK2	Signifies that the ATU-R requires the ATU-C to send C-PILOT1, C-PILOT2, and C-PILOT3 during transceiver training (see 11.7.2, 11.7.6 and 11.7.10).
RS16	Set to 1_b if and only if RS16 was set to 1_b in both the last previous CL message and the last previous CLR message. It signifies that the capability to use Reed-Solomon parameters R = 16 and S = 16 is available in both the upstream and downstream directions.
Fast Retrain	Signifies that the ATU-R requires the ATU-C to start an escape to fast retrain.
EOC Clear OAM	Set 1_b if and only if this bit was set to 1_b in both the last previous CL message and the last previous CLR message. Signifies that both the ATU-C and ATU-R may transmit and receive G.997.1. OAM frames.
DBM	If set to 0_b, this bit shall indicate that Bitmap-NR and Bitmap-NC are enabled (Dual Bitmap mode) and are used to transmit data. If set to 1_b, this bit shall indicate that Bitmap-NR and Bitmap-NC are disabled (FEXT Bitmap mode), i.e. only Bitmap-FR and Bitmap-FC are used to transmit data by ATU-C and ATU-R respectively. This mode selection shall be only performed by ATU-C. This bit shall be set to 1_b if it was set to 1_b in a previous CL message.

IPR2025-00395
Petitioners' Exhibit 1012
Page 66 of 179

One and only one of the bits R-ACK1 or R-ACK2 shall be set to 1_b in an MS message sent from the ATU-R. If both bits are enabled in the CL and CLR message, the R-ACK1 or R-ACK2 selection is at the ATU-R's discretion.

11.4 Handshake power levels

When Recommendation G.994.1 (Handshake) is invoked outside of a G.992.2 session or in order to change modes of operation, the PSD levels at the ATU-R and ATU-C shall be as specified in Recommendation G.994.1. When Handshake is invoked from the procedures described in this Recommendation, the power levels shall be as specified in Table 24.

Table 24/G.992.2 – Handshake power levels

Prior G.992.2 state	ATU-C power level (dBm/Hz)	ATU-R power level (dBm/Hz)
Fast Retrain Request Abort	Nominal	Nominal
Fast Retrain Truncate	– 40 – Absolute Downstream Fast Retrain Power Cutback	– 38 – Absolute Upstream Fast Retrain Power Cutback
Fast Retrain Unknown Profile	– 40 – Absolute Downstream Fast Retrain Power Cutback	– 38 – Absolute Upstream Fast Retrain Power Cutback
Initialization Reset Procedure from errors, malfunctions or timeouts	Nominal	Nominal
L3 to L0 Power Management Transition T3a	Nominal	Nominal
L0 to L0 Power Management Transition T0a or t0c	Nominal	Nominal
L1 to L0 Power Management Transition T1a or T1c	Nominal	Nominal

11.5 Escape from Handshake to Fast Retrain

If the escape to Fast Retrain mode is selected during the G.994.1 procedure, the ATUs shall perform a Fast Retrain instead of entering the Transceiver Training phase.

It is recommended that, in cases other than when the Handshake procedure has been initiated from a Fast Retrain Truncate or Fast Retrain Unknown Profile, the Handshake procedure request an escape to Fast Retrain (see Figure 23).

IPR2025-00395
Petitioners' Exhibit 1012
Page 67 of 179

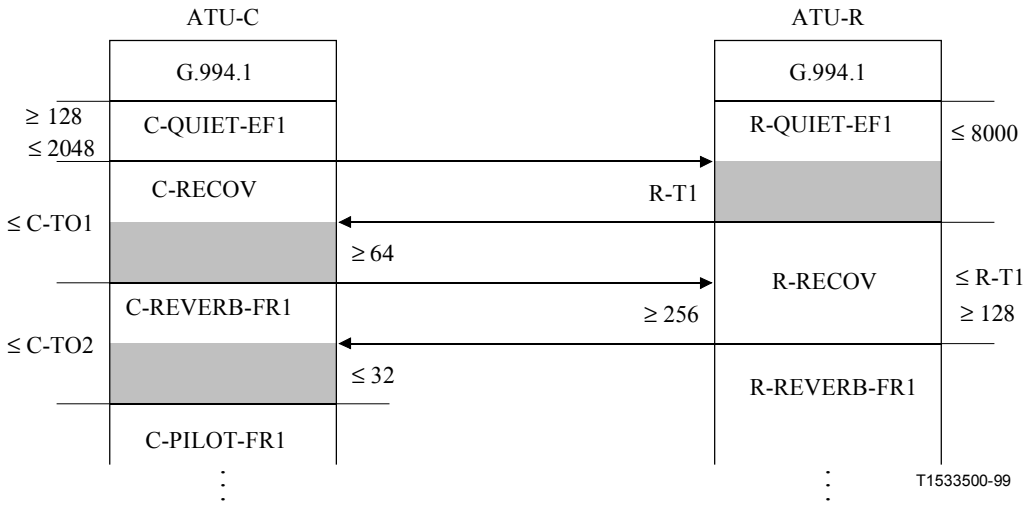

Figure 23/G.992.2 – Timing diagram of escape to Fast Retrain

11.5.1 C-QUIET-EF1

C-QUIET-EF1 begins at the termination of Recommendation G.994.1. The minimum duration of C-QUIET-EF1 is 128 symbols. The maximum duration of C-QUIET-EF1 is 2048 symbols.

11.5.2 R-QUIET-EF1

R-QUIET-EF1 begins at the termination of Recommendation G.994.1. The minimum duration of R-QUIET-EF1 is 128 DMT symbols after the detection of C-RECOV. The ATU-R shall progress to R-RECOV only after it has detected any part of the C-RECOV signal that is needed for reliable detection. The maximum duration of R-QUIET-EF1 is 8000 symbols.

11.6 Power levels in Transceiver Training, Channel Analysis and Exchange

All ATU-R signals defined in Transceiver Training, Channel Analysis and Exchange except R-ECT, shall be transmitted using the PSD level of the previous G.994.1 session with one exception: if Recommendation G.994.1 was invoked outside of a G.992.2 session or in order to change modes of operation, all ATU-R signals defined in Transceiver Training, Channel Analysis and Exchange except R-ECT shall be transmitted at Nominal PSD level.

C-PILOT1 and C-PILOT1A shall be transmitted using the PSD level of the previous G.994.1 session with one exception: if G.994.1 was invoked outside of a Recommendation G.992.2 session or in order to change modes of operation C-PILOT1 and C-PILOT1A shall be transmitted at Nominal PSD level. C-REVERB1 and subsequent ATU-C signals defined Transceiver Training, Channel Analysis and Exchange, unless otherwise noted, shall be transmitted at the PSD level calculated as defined in 11.7.5.

C/R-QUIET signals are defined as zero output voltage from the DAC of Figure 2.

Because C-ECT and R-ECT are vendor-defined signals, the above PSD specification shall only be interpreted as a maximum.

11.7 Transceiver training – ATU-C

This subclause and subclause 11.8 describe the signals transmitted during transceiver training by the ATU-C and ATU-R, respectively (see Figure 24). Synchronization of the mutual training begins with the transmission of R-REVERB1 (see 11.8.2) and is maintained throughout training by both transceivers counting the number of symbols from that point on.

IPR2025-00395
Petitioners' Exhibit 1012
Page 68 of 179

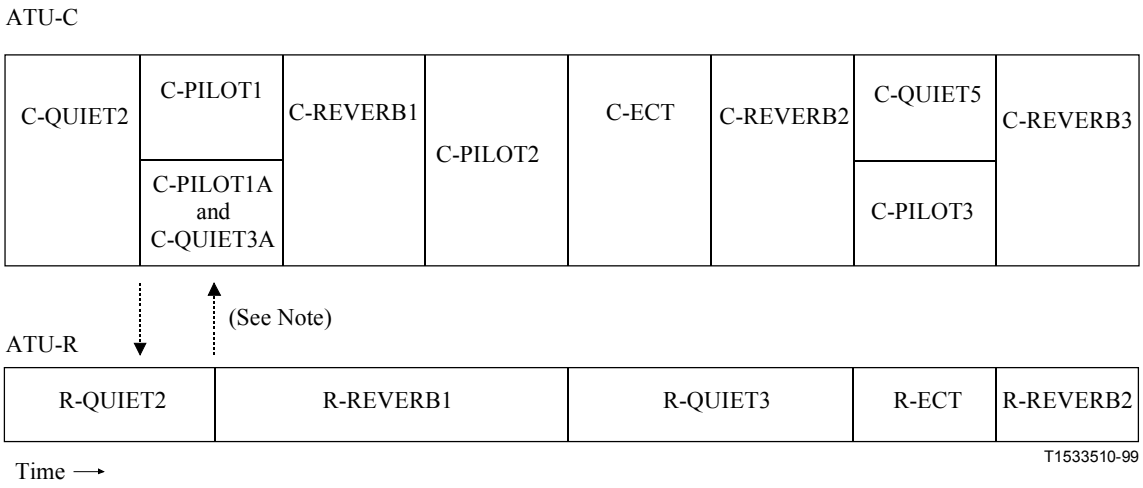

NOTE – Because the ATU-C and ATU-R states are synchronized from this point on, no more "cause-and-effect arrows are shown.

Figure 24/G.992.2 – Timing diagram of transceiver training (see 11.7-11.8)

11.7.1 C-QUIET2

C-QUIET2 begins after termination of Recommendation G.994.1. The minimum duration of C-QUIET2 is 128 symbols. The maximum duration of C-QUIET2 is 2048 symbols.

The state that the ATU-C enters following C-QUIET2 depends upon parameters negotiated in the G.994.1 procedure.

11.7.2 C-PILOT1

During C-PILOT1 or C-PILOT1A as appropriate, the ATU-C shall measure the aggregate received upstream power on subcarriers 7-18 of R-REVERB1, and thereby calculate a downstream PSD.

Within 16 symbols after detection of the first symbol of R-REVERB1 the ATU-C shall start a timer. This establishes synchronization of the subsequent transitions between states at ATU-C and ATU-R. After 512 symbols, as measured by this timer, the ATU-C shall go to C-REVERB1. Thus the minimum duration of C-PILOT1 is 512 symbols, but it will exceed this by the round-trip propagation and signal-processing time plus the amount of time required by ATU-R to detect C-PILOT1 and respond by transmitting R-REVERB1 (see 11.8.2).

C-REVERB1 follows C-PILOT1.

C-PILOT1 is a single frequency sinusoid at 276 kHz defined as:

$$X_k = \begin{cases} 0 & \text{for } k \neq 64, 0 \leq k \leq 127 \\ A_{C-PILOT1} & \text{for } k = 64 \end{cases}$$

$A_{C\text{-}PILOT1}$ shall be such that PSD level is as defined in 11.6. The duration of C-PILOT1 can be up to 4436 symbols

C-REVERB1 follows C-PILOT1.

11.7.3 C-PILOT1A

C-PILOT1A is the same transmitted signal as C-PILOT1. The duration of C-PILOT1A can be up to 4000 symbols. The exact duration of C-PILOT1A depends upon the duration of R-QUIET2.

IPR2025-00395
Petitioners' Exhibit 1012
Page 69 of 179

Within 16 symbols after detection of the first symbol of R-REVERB1 the ATU-C shall start a timer (this establishes synchronization of the subsequent transitions between states at the ATU-C and ATU-R) and shall proceed to C-QUIET3A.

C-QUIET3A follows C-PILOT1A.

11.7.4 C-QUIET3A

Within 512 to 516 symbols after detection of the first symbol of R-REVERB1, the ATU-C shall go to C-REVERB1. Thus, the minimum duration of C-QUIET3A is 512-16 (496) symbols; the maximum is 516 symbols. The total duration of C-QUIET3A and C-PILOT1A is a minimum of 512 symbols, but it will exceed this (up to a maximum duration of 4436 symbols) by the round-trip propagation and signal processing time plus the amount of time required by ATU-R to detect C-PILOT1A and respond by transmitting R-REVERB1.

C-REVERB1 follows C-QUIET3A.

11.7.5 C-REVERB1

C-REVERB1 is a signal that allows the ATU-C and ATU-R receiver to adjust its automatic gain control (AGC) to an appropriate level.

The C-REVERB1 signal shall modulate a contiguous range of subcarriers from n to m, where $n \leq 37$ and $m \geq 68$. Subsequent C-REVERB and C-SEGUE signals shall use the same range of subcarriers as C-REVERB1. The value of n and m are CO vendor discretionary. All ATU-R receivers, during Initialization, shall tolerate the maximum number of subcarriers allowed by the overlapped spectrum mask defined in Annex B.

The data pattern used in C-REVERB1 shall be the pseudo-random downstream sequence DPRD, d_n for $n = 1$ to $2 \times N_{SC\text{-}DN}$ and encoding method defined in 7.10.3.

The bits shall be used as follows: The first pair of bits (d_1 and d_2) are used for the dc and Nyquist subcarriers (the power assigned to them is, of course, zero, so the bits are effectively ignored); then the first and second bits of subsequent pairs are used to define the X_i and Y_i for $i = 1$ to $N_{SC\text{-}DN} - 1$ as defined in Table 9.

The period of PRD is 511 bits. The bits d_1 to d_9 shall be re-initialized for each symbol, so each symbol of C-REVERB1 is identical. Bits 129 and 130, which modulate the pilot carrier, shall be overwritten by {0,0} generating the {+,+} constellation.

The transmit PSD for C-REVERB1 shall be the Reference PSD level of $(-40 - 2n)$ dBm/Hz, with $2n =$ the maximum of either the Absolute Downstream Fast Retrain Power Cutback or the Initialization Politeness Power Cutback. The Initialization Politeness Power Cutback is obtained using Table 25, based on the average upstream loop attenuation measured during R-REVERB1. This reference PSD level shall become the reference level for all subsequent gain calculations. The average upstream loop attenuation is defined as the difference between the upstream reference power in dBm and the total upstream power measured on subcarriers 7 through 18 during R-REVERB1. The upstream reference power is defined as the total transmit power on subcarriers 7 through 18, using the R-REVERB1 reference transmit PSD level.

Table 25/G.992.2 – Initialization Politeness Power Cutback: Downstream PSD as a function of average upstream loop attenuation

Average upstream loop attenuation (dB)	>6	>5	>4	>3	>2	>1	>0
Initialization Politeness Power Cutback (dB)	0	2	4	6	8	10	12

IPR2025-00395
Petitioners' Exhibit 1012
Page 70 of 179

The duration of C-REVERB1 is 512 (repeating) symbols without cyclic prefix. C-PILOT2 follows C-REVERB1.

The C-REVERB1 signal should be sufficiently wideband in order to probe the transmission channel in such a way that the C-REVERB1 signal does not sufficiently lengthen the estimated channel impulse response as measured using C-REVERB1.

11.7.6 C-PILOT2

The C-PILOT2 signal is the same as C-PILOT1; the duration is 3072 symbols. C-ECT follows C-PILOT2.

11.7.7 C-ECT

C-ECT is a vendor-defined signal that is used to train the echo canceller at ATU-C for EC implementations. Vendors of FDM and EC versions have complete freedom to define their C-ECT signal given the power constraints defined in Annexes A and B. The duration of C-ECT, however, is fixed at 512 symbols. The receiver at ATU-R should ignore this signal. C-REVERB2 follows C-ECT.

11.7.8 C-REVERB2

C-REVERB2 is a signal that allows the ATU-R receiver to perform synchronization and to train any receiver equalizer. C-REVERB2 is the same as C-REVERB1 (see 11.7.5). The duration of C-REVERB2 is 1536 (repeating) symbols without cyclic prefix. The state following C-REVERB2 depends upon negotiated parameters in the G.994.1 procedure.

11.7.9 C-QUIET5

The duration of C-QUIET5 is 512 symbols. C-REVERB3 follows C-QUIET5.

11.7.10 C-PILOT3

C-PILOT3 signal is the same as C-PILOT1 (see 11.7.2). The duration of C-PILOT3 is 512 symbols. C-REVERB3 follows C-PILOT3.

11.7.11 C-REVERB3

C-REVERB3 is a second training signal, which allows the ATU-R receiver to perform or maintain synchronization and to further train any receiver equalizer. C-REVERB3 is the same as C-REVERB2 (see 11.7.8). The duration of C-REVERB3 is 1024 (repeating) symbols without cyclic prefix. This is the last segment of transceiver training. C-SEGUE1 follows immediately.

11.8 Transceiver training – ATU-R

11.8.1 R-QUIET2

R-QUIET2 begins after termination of Recommendation G.994.1. The minimum duration of R-QUIET2 is 128 DMT symbols after the detection of C-PILOT1/1A. The ATU-R shall progress to R-REVERB1 only after it has detected any part of the following C-QUIET3A or C-PILOT1/1A that is needed for reliable detection. The maximum duration of R-QUIET2 is 8000 symbols.

Loop timing is defined as the combination of the slaving of an ADC clock to the received signal (i.e. to the other transceiver's DAC clock), and tying the local DAC and ADC clocks together. Loop timing shall always be performed at the ATU-R and be acquired while transmitting R-QUIET2 and before the last 512 symbols of R-REVERB1. An ATU-C may train its equalizer during the last 512 symbols of R-REVERB1. Such equalizer training, at the ATU-C, requires sufficient sampling clock stability at the ATU-R transmitter. After loop timing is acquired at the ATU-R, the ATU-R shall re-acquire loop timing after a period with free running timing (i.e. no C-PILOT over maximum

IPR2025-00395
Petitioners' Exhibit 1012
Page 71 of 179

512 symbols) within 512 symbols after the C-PILOT re-appearing. This applies to C-QUIET5 and may also apply to C-QUIET3A and C-ECT.

NOTE – The delay in the ATU-R in going from C-QUIET2 to R-REVERB1 is to allow the possibility that the ATU-R may fully synchronize its time base before sending R-REVERB1.

11.8.2 R-REVERB1

R-REVERB1 is used to allow the ATU-C to:

1) measure the upstream wideband power in order to adjust the ATU-C transmit power level;
2) adjust its receiver gain control;
3) synchronize its receiver and train its equalizer.

The data pattern used in R-REVERB1 is UPRD defined in 7.10.4.

R-REVERB1 is a periodic signal, without cyclic prefix, that is transmitted consecutively for 4096 symbols. The first 512 symbols coincide with C-QUIET3A or C-PILOT1 signal in time, the second 512 symbols coincide with C-REVERB1, and the last 3072 symbols coincide with C-PILOT2. R-QUIET3 immediately follows R-REVERB1.

11.8.3 R-QUIET3

The duration of R-QUIET3 is 2048 symbols, of which the first 512 symbols coincide with C-ECT in time, and the next 1536 symbols coincide with C-REVERB2. The final symbol of R-QUIET3 may be shortened by any number of samples to accommodate transmitter to receiver frame alignment. R-ECT immediately follows R-QUIET3.

11.8.4 R-ECT

R-ECT, similar to C-ECT, is a vendor-defined signal that may be used to train an echo canceller at the ATU-R. Vendors of FDM and EC versions have absolute freedom to define R-ECT signal given the power constraints defined in Annexes A and B. The duration of R-ECT is however, fixed at 512 DMT symbols. The receiver at the ATU-C ignores this signal. R-REVERB2 follows R-ECT.

11.8.5 R-REVERB2

The signal R-REVERB2 is the same as R-REVERB1 (see 11.8.2); it can be used by ATU-C to perform timing recovery and receiver equalizer training. The duration of R-REVERB2 shall be between 1024 and 1056 symbols. This signal is the last segment of transceiver training. ATU-R then begins channel analysis and starts transmitting R-SEGUE1.

IPR2025-00395
Petitioners' Exhibit 1012
Page 72 of 179

11.9 Channel analysis (ATU-C)

See Figure 25.

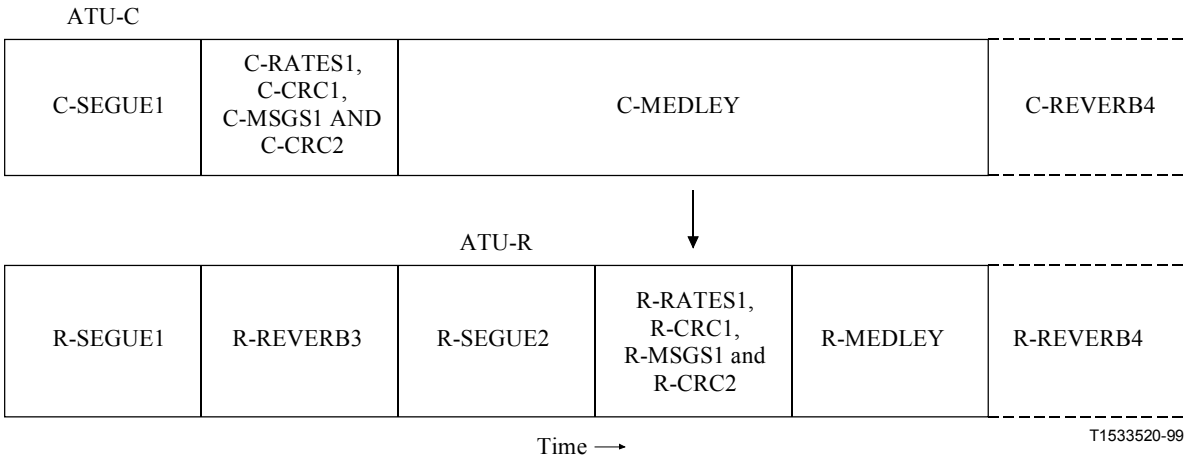

Figure 25/G.992.2 – Timing diagram of channel analysis (see 11.7-11.8)

During channel analysis the synchronization between ATU-C and ATU-R may be broken during R-REVERB3, which has an indefinite duration; this potential timeout is described in 11.10.2. Furthermore, if during channel analysis any crc check sum indicates an error in any of the control data, this shall invoke the Initialization Reset Procedure.

11.9.1 C-SEGUE1

Except for the pilot tone, C-SEGUE1 shall be generated from a tone-by-tone 180-degree phase reversal of C-REVERB1 (i.e. + maps to –, and – maps to +, for each of the 4-QAM signal constellation). The duration of C-SEGUE1 is ten (repeating) symbol periods. Following C-SEGUE1, ATU-C enters state C-RATES1.

11.9.2 C-RATES1

C-RATES1 is the first ATU-C signal for which a cyclic prefix (defined in 7.11) is used. The purpose of C-RATES1 is to transmit four options for data rates and formats to the ATU-R. Each option consists of three fields:

- The B_F field is not applicable to this Recommendation. B_F contains a total of 80 bits organized as 10 entries each of eight bits. All bits shall be set to 0_b.
- The B_I field contains the number of bytes in a DF allocated to the AS0 (downstream) and LS0 (upstream) channel. B_I contains a total of 80 bits organized as 10 entries each of eight bits. The first entry in B_I contains the number of bytes in a DF allocated to AS0. The eight entry in B_I contains the number of bytes in a DF allocated to LS0. All other bits in B_I shall be set to 0_b.
- The RRSI field contains Reed-Solomon FEC and interleaver parameters. The RRSI field contains a total of 80 bits organized as 10 entries each of eight bits. The second entry in the RRSI field contains the parameter RS_I: The number of parity bytes per symbol in the downstream transmission direction with RS_I equal to R/S. The third entry in the RRSI field contains the parameter S: S is the number of DFs per Reed-Solomon codeword in the downstream transmission direction. The fourth entry contains the parameter I: The downstream interleave depth in codewords. The seventh entry in the RRSI field contains the

IPR2025-00395
Petitioners' Exhibit 1012
Page 73 of 179

parameter RS_I: The number of parity bytes per symbol in the upstream transmission direction with RS_I equal to R/S. The eighth entry in the RRSI field contains the parameter S; S is the number of DFs per Reed-Solomon codeword in the upstream transmission direction. The ninth entry contains the parameter I: The upstream interleave depth in codewords. All other bits in RRSI shall be set to 0_b.

The four options are transmitted in order of decreasing preference. C-RATES1 is preceded by a 4-byte prefix of $\{55\ 55\ 55\ 55_{16}\}$. Table 26 summarizes C-RATES1 and Table 27 summarizes RRSI fields of C-RATES1.

Table 26/G.992.2 – C-RATES1 message

		Option 1			**Option 2**			**Option 3**			**Option 4**		
	Prefix	B_F	B_I	**RRSI**	B_F	B_I	**RRSI**	B_F	B_I	**RRSI**	B_F	B_I	**RRSI**
Number of bytes	4	10	10	10	10	10	10	10	10	10	10	10	10

Table 27/G.992.2 – RRSI fields of C-RATES1

			<——bits——>							
Entry #	**Field**		**7**	**6**	**5**	**4**	**3**	**2**	**1**	**0**
1	RS_F	Downstream	N/A to Recommendation G.992.2 – set to $\{00000000_b\}$							
2	R	Downstream	0_b	0_b	value of R [MSB ↔ LSB]					
3	S	Downstream	0_b	0_b	value of S [MSB ↔ LSB]					
4	I	Downstream	I_7	I_6	I_5	I_4	I_3	I_2	I_1	I_0
5	FS(LS2)	Downstream	N/A to Recommendation G.992.2 – set to $\{00000000_b\}$							
6	RS_F	Upstream	N/A to Recommendation G.992.2 – set to $\{00000000_b\}$							
7	R	Upstream	0_b	0_b	value of R [MSB ↔ LSB]					
8	S	Upstream	0_b	0_b	value of S [MSB ↔ LSB]					
9	I	Upstream	I_7	I_6	I_5	I_4	I_3	I_2	I_1	I_0
10	FS(LS2)	Upstream	N/A to Recommendation G.992.2 – set to $\{00000000_b\}$							

Only one bit of information is transmitted in each symbol of C-RATES1: A zero bit is encoded to one symbol of C-REVERB1 and a one bit is encoded to one symbol of C-SEGUE1. Since there are a total of 992 bits of C-RATES1 information, the duration of C-RATES1 is 992 symbols. The 992 bits are to be transmitted in the order shown in Table 26 with the least significant bit first. That is, the least significant bit of option 1, B_F, is to be transmitted during the 33rd symbol of C-RATES1, after the prefix. Following C-RATES1, the ATU-C shall enter state C-CRC1.

IPR2025-00395
Petitioners' Exhibit 1012
Page 74 of 179

11.9.3 C-CRC1

C-CRC1 is a cyclic redundancy check for detection of errors in the reception of C-RATES1 at the ATU-R. The crc bits are computed from the C-RATES1 bits using the equation:

$$c(\mathrm{D}) = a(\mathrm{D})\ \mathrm{D}^{16} \text{ modulo } \mathrm{g(D)},$$

where:

$$a(\mathrm{D}) = a_0\ \mathrm{D}^{959} + a_1\ \mathrm{D}^{958} \ldots + a^{959}$$

is the message polynomial formed from the 960 bits of C-RATES1, with a_0 the least significant bit of the first byte of C-RATES1 (i.e. option 1 B_F);

$$\mathrm{g(D)} = \mathrm{D}^{16} + \mathrm{D12} + \mathrm{D5} + 1$$

is the crc generator polynomial, and

$$\mathrm{c(D)} = c_0\mathrm{D}^{15} + c_1\mathrm{D}^{14} \ldots\ldots + c_{14}\mathrm{D} + c_{15}$$

is the crc check polynomial.

The 16 bits c_0-c_{15} are transmitted (c_0 first and c_{15} last) in 16 symbol periods using the method described in 11.9.2. Following C-CRC1, the ATU-C shall enter state C-MSG1.

11.9.4 C-MSG1

C-MSG1 transmits a 48-bit message signal to the ATU-R. This message includes ATU-C transmit power level used, echo canceller option, etc. The message, *m*, is defined by:

$$m = \{m_{47}, m_{46}, \ldots\ldots m_1, m_0\}$$

with m_0 being transmitted first. The message components are defined in the following subclauses, and their assigned positions within the composite message, *m,* are defined in Table 28. A total of 48 symbol periods are used to communicate the 48-bit message, using the encoding method described in 11.9.2. Following C-MSG1, the ATU-C shall enter signalling state C-CRC2.

Table 28/G.992.2 – Assignment of 48 bits of C-MSG1

Suffix(es) of m_i (Note 1)	Parameter (Note 3)
47-44	ATU target noise margin (Note 2)
43-17	Reserved by ITU-T
16	Echo cancellation option
15	Unused (shall be set to 1_b)
14-12	Reserved by ITU-T
11	NTR
10, 9	Framing mode
8-6	Initialization Politeness Power Cutback
5, 4	Reserved by ITU-T
3, 2, 1, 0	Maximum numbers of bits per subcarrier supported
NOTE 1 – Within the separate fields the least significant bits have the lowest subscripts. NOTE 2 – A positive number of dB; binary coded 0-15 dB. NOTE 3 – All reserved bits shall be set to 0_b.	

IPR2025-00395
Petitioners' Exhibit 1012
Page 75 of 179

11.9.4.1 Minimum required SNR margin – Bits 47-44

Binary coded 0 to 15 dB.

11.9.4.2 Echo cancellation option – Bit 16

$m_{16} = 0_b$ indicates no echo cancellation, $m_{16} = 1_b$ indicates echo cancellation.

11.9.4.3 Unused – Bit 15

m_{15} shall be set to 1_b.

11.9.4.4 NTR – Bit 11

$m_{11} = 1_b$ indicates that the ATU-C will use indicator bits IB23 to IB20 as defined in Table 4 for the transport of the NTR.

11.9.4.5 Framing mode – Bits 10, 9

m_{10} and m_9 shall both be set to 1_b.

11.9.4.6 Initialization Politeness Power Cutback – Bits 8, 7, 6

The ATU-C shall report the level of Initialization Politeness Power Cutback as a result of the calculation described in 11.7.5. The encoding rules for m_8, m_7, m_6 are shown in Table 29.

Table 29/G.992.2 – C-MSG1 encoding rules for Initialization Politeness Power Cutback (dB)

m_8	m_7	m_6	Initialization Politeness Power Cutback (dB)
1_b	1_b	1_b	0
1_b	1_b	0_b	2
1_b	0_b	1_b	4
1_b	0_b	0_b	6
0_b	1_b	1_b	8
0_b	1_b	0_b	10
0_b	0_b	1_b	12

11.9.4.7 Maximum numbers of bits per subcarrier supported – Bits 3-0

The $N_{downmax}$ (transmit) capability shall be binary encoded onto $\{m_3 \ldots m_0\}$ (e.g. $1101_b = 13_{10}$). The maximum number of bits for the upstream data, N_{upmax}, that the ATU-C receiver can support need not be signalled to the ATU-R; it will be implicit in the bits and gains message, C-B&G, which is transmitted after channel analysis.

11.9.5 C-CRC2

C-CRC2 is a cyclic redundancy check for detection of errors in the reception of C-MSG1 at the ATU-R. The crc generator polynomial is as defined in 11.9.3. The crc message polynomial is as constructed in 11.9.3, with m_0 corresponding to a_0 and m_{47} corresponding to a_{47}. The crc check polynomial is generated in the same way as defined in 11.9.3. These 16 bits are transmitted in 16 symbol periods using the method described in 11.9.3. Following C-CRC2, the ATU-C shall enter signalling state C-MEDLEY.

IPR2025-00395
Petitioners' Exhibit 1012
Page 76 of 179

11.9.6 C-MEDLEY

C-MEDLEY is a wideband pseudo-random signal used for estimation at the ATU-R of the downstream SNR. The data to be transmitted are derived from the pseudo-random sequence, PRD, and modulated as defined in 11.7.5. In contrast to C-REVERB1, however, the cyclic prefix is used and the data sequence continues from one symbol to the next (i.e. d_1 to d_9 are not re-initialized for each symbol); since PRD is of length 511, and 512 bits are used for each symbol, the subcarrier vector for C-MEDLEY therefore changes from one symbol period to the next. The pilot subcarrier is over-written by the (+,+) signal constellation. C-MEDLEY is transmitted for 16 384 symbol periods. Following C-MEDLEY the ATU-C shall enter the state C-REVERB4.

11.10 Channel analysis (ATU-R)

During channel analysis there are two situations where the ATU-R shall invoke the Initialization Reset Procedure: a timeout and a detected error in the received control data. A timeout occurs if the time in R-REVERB3 exceeds the limit of 4000 symbols. Also, if any C-CRC checksum indicates that there is an error in the received control data, then it shall invoke the Initialization Reset Procedure.

11.10.1 R-SEGUE1

R-SEGUE1 is generated from a tone-by-tone 180-degree phase reversal of R-REVERB1 (i.e.+ maps to −, and − maps to +, for each of the 4-QAM signal constellation). The duration of R-SEGUE1 is 10 symbol periods. Following R-SEGUE1 the ATU-R shall enter state R-REVERB3.

11.10.2 R-REVERB3

R-REVERB3 is similar to R-REVERB1 (see 11.8.2); the only difference is that R-REVERB3 is the first ATU-R signal with the addition of a cyclic prefix to every symbol (defined in 7.11) The duration of R-REVERB3 is not fixed but has a maximum of 4000 symbols. If C-CRC2 is not detected within 4000 symbols, the ATU-R shall invoke the Initialization Reset Procedure. After detection of C-RATES1-C-CRC2, the ATU-R shall continue to send R-REVERB3 for 20 additional symbols before entering R-SEGUE2.

11.10.3 R-SEGUE2

The signal R-SEGUE2 is similar to R-SEGUE1 (see 11.10.1). The only difference is the addition of the cyclic prefix. Following R-SEGUE2 the ATU-R shall enter state R-RATES1.

11.10.4 R-RATES1

See Table 30.

Table 30/G.992.2 – R-RATES1

		Option 1			Option 2			Option 3			Option 4		
	Prefix	B_F	B_I	**RRSI**	B_F	B_I	**RRSI**	B_F	B_I	**RRSI**	B_F	B_I	**RRSI**
Number of bytes	4	3	3	5	3	3	5	3	3	5	3	3	5

The purpose of R-RATES1 for the upstream channel is the same as that of C-RATES1 for the downstream channel (see 11.9.2). Each option consists of three fields:

- The B_F field is not applicable to this Recommendation. B_F contains a total of 24 bits organized as three entries each of eight bits. All bits shall be set to 0_b.

IPR2025-00395
Petitioners' Exhibit 1012
Page 77 of 179

- The B_I field contains the number of bytes in a DF allocated to the LS0 (upstream) channel. B_I contains a total of 24 bits organized as three entries each of eight bits. The first entry in B_I contains the number of bytes in a DF allocated to LS0. All other bits in B_I shall be set to 0_b.
- The RRSI field contains Reed-Solomon FEC and interleaver parameters. The RRSI field contains a total of 40 bits organized as five entries each of eight bits (see Table 31). The second entry in the RRSI field contains the parameter RS_I: The number of parity bytes per symbol in the upstream transmission direction with RS_I equal to R/S. The third entry in the RRSI field contains the parameter S; S is the number of DFs per Reed-Solomon codeword in the upstream transmission direction. The fourth entry contains the parameter I: The eight least significant bits of the upstream interleave depth in codewords. All other bits in RRSI shall be set to 0_b.

Table 31/G.992.2 – RRSI fields of R-RATES1

			<——bits——>							
Entry #	**Field**		**7**	**6**	**5**	**4**	**3**	**2**	**1**	**0**
1	RS_F	Upstream	N/A to Recommendation G.992.2 – set to $\{00000000_b\}$							
2	R		0_b	0_b	value of R [MSB ↔ LSB]					
3	S		0_b	0_b	value of S [MSB ↔ LSB]					
4	I		I_7	I_6	I_5	I_4	I_3	I_2	I_1	I_0
5	FS(LS2)		N/A to Recommendation G.992.2 – set to $\{00000000_b\}$							

The four options are transmitted in order of decreasing preference. The ATU-C has control over all the data rates, so R-RATES1 is copied from the appropriate fields of C-RATES1.

Only one bit of information is transmitted during each symbol period of R-RATES1: A zero bit is encoded to one symbol of R-REVERB1 and a one bit is encoded to one symbol of R-SEGUE1 (with addition of cyclic prefix). Since there are a total of 384 bits of RATES1 information, the length of R-RATES1 is 384 symbols. The 384 bits are to be transmitted in the order shown in Table 30, with the least significant bit first. That is, the least significant bit of option 1, B_F (see Table 30) is to be transmitted during the 33rd symbol of R-RATES1, after the prefix. Following R-RATES1, the ATU-R shall enter state R-CRC1.

11.10.5 R-CRC1

R-CRC1 is a cyclic redundancy check intended for detection of an error in the reception of R-RATES1 at the ATU-C. The crc polynomial c(D) and generator polynomial g(D) are the same as for C-CRC1 (see 11.9.3).The 16 bits c_0 to c_{15} are transmitted (c_0 first and c_{15} last) in 16 symbol periods using the same method as R-RATES1 (see 11.10.4). Following R-CRC1, the ATU-R shall enter state R-MSG1.

11.10.6 R-MSG1

R-MSG1 transmits a 48-bit message signal to the ATU-C. This message includes echo canceller option, etc. The message, m, is defined by:

$$m = \{m_{47}, m_{46}, \ldots\ldots, m_1, m_0\}$$

IPR2025-00395
Petitioners' Exhibit 1012
Page 78 of 179

with m_0, the least significant bit, being transmitted first. The message components are defined in the following subclauses, and their assigned positions within the composite message, m, are defined in Table 32.

A total of 48 symbol periods are used to communicate the 32-bit message, using the encoding method described in 11.10.4. Following R-MSG1, the ATU-R shall enter signalling state R-CRC2.

Table 32/G.992.2 – Assignment of 48 bits of R-MSG1

Suffix(es) of m_i (Note 1)	Parameter (Note 2)
47-17	Reserved by ITU-T
16	Echo cancellation option
15	Unused (shall be set to 1_b)
14-12	Reserved by ITU-T
11	Network timing reference
10, 9	Framing mode
8-4	Reserved by ITU-T
3-0	Maximum numbers of bits per subcarrier supported
NOTE 1 – Within the separate fields the least significant bits have the lowest subscripts. NOTE 2 – All reserved bits shall be set to 0_b.	

11.10.6.1 Echo cancellation option – Bit 16

$m_{16} = 0_b$ indicates no echo cancellation; $m_{16} = 1_b$ indicates echo cancellation.

11.10.6.2 Unused – Bit 15

m_{15} shall be set to 1_b.

11.10.6.3 Framing mode – Bits 10, 9

m_{10} and m_9 shall both be set to 1_b.

11.10.6.4 Network timing reference – Bit 11

$m_{11} = 1_b$ indicates the ATU-R supports reconstruction of the network timing reference from the downstream indicator bits 23-20.

11.10.6.5 Maximum numbers of bits per subcarrier supported – Bits 3-0

The N_{upmax} (transmit) capability is encoded onto $\{m_3 \ldots m_0\}$ with a conventional binary representation (e.g. $1101_b = 13_{10}$).

NOTE – The maximum number of bits for the downstream data, $N_{downmax}$, that the ATU-R receiver can support need not be signalled to the ATU-C; it will be implicit in the bits and gains message, R-B&G, which is transmitted after channel analysis.

11.10.7 R-CRC2

R-CRC2 is a cyclic redundancy check for detection of errors in the reception of R-MSG1 at the ATU-C. The crc generator polynomial is as defined in 11.10.5. The crc message polynomial is as constructed in 11.10.5, with m_0 corresponding to a_0 and m_{47} corresponding to a_{47}. The crc check polynomial is generated in exactly the same way as described in 11.10.5. These 16 bits are

IPR2025-00395
Petitioners' Exhibit 1012
Page 79 of 179

transmitted in 16 symbol periods using the method described in 11.10.5. Following R-CRC2, the ATU-R shall enter state R-MEDLEY.

11.10.8 R-MEDLEY

R-MEDLEY is a wideband pseudo-random signal used for estimation of the upstream SNR at the ATU-C. The data to be transmitted are derived from UPRD defined in 7.10.4. In contrast to R-REVERB1, however, the cyclic prefix is used and the data sequence continues from one symbol to the next (i.e. d_1 to d_6 are not re-initialized for each symbol). Because the sequence is of length 63, and 64 bits are used for each symbol, the subcarrier vector for R-MEDLEY changes from one symbol period to the next. R-MEDLEY is transmitted for 16 384 symbol periods. Following R-MEDLEY the ATU-R enters signalling state R-REVERB4.

11.10.9 R-REVERB4

R-REVERB4 is the same as R-REVERB3 (see 11.10.2). The duration of R-REVERB4 is 128 symbols. This signal marks the end of channel analysis, and R-SEGUE3 immediately follows R-REVERB4.

11.11 Exchange – ATU-C

The timing diagram of exchange is shown in Figure 26.

IPR2025-00395
Petitioners' Exhibit 1012
Page 80 of 179

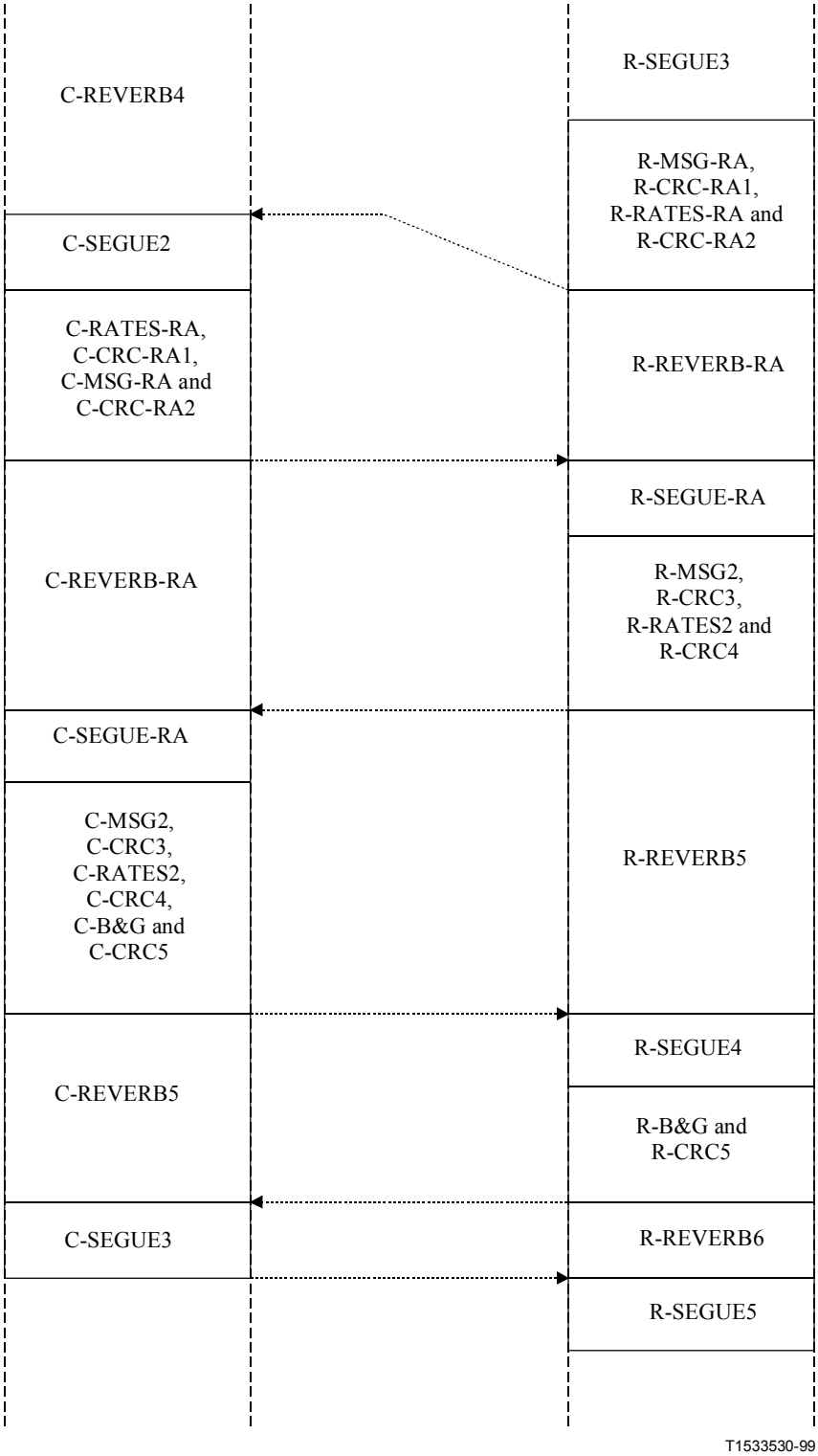

Figure 26/G.992.2 – Timing diagram of exchange

During exchange there are three events that shall cause the ATU-C to invoke the Initialization Reset Procedure: Timeouts, no acceptable options in a C-RATES2 message, and error detection by a crc checksum. The exchange procedure is partly synchronized between ATU-C and ATU-R, and partly interactive. During the interactive part (C-REVERB4, C-REVERB5, C-REVERB-RA) a timeout shall occur when the time in the C-REVERB4 state exceeds 6000 symbols or when the time in C-REVERB-RA or C-REVERB5 state exceeds 4000 symbols.

IPR2025-00395
Petitioners' Exhibit 1012
Page 81 of 179

11.11.1 C-REVERB4

C-REVERB4 is similar to C-REVERB2 (see 11.7.8), the only difference being the addition of a cyclic prefix on every symbol, and a maximum duration of 6000 symbols. C-REVERB4 continues into the exchange procedure, and its duration is not fixed. The timeout features of C-REVERB4 are defined in this subclause.

If the ATU-C does not detect R-CRC-RA2 within 6000 symbols, it shall time out and reset to C-QUIET1. After detection of R-SEGUE3 through R-CRC-RA2, the ATU-C shall continue to transmit C-REVERB4 for another 80 symbols before progressing to state C-SEGUE2.

11.11.2 C-SEGUE2

The signal C-SEGUE2 is the same as C-SEGUE1 (see 11.9.1); the only difference is the addition of the cyclic prefix. The duration of C-SEGUE2 is ten symbol periods. Following C-SEGUE2 the ATU-C shall enter state C-RATES-RA to begin a second exchange of rates.

11.11.3 C-RATES-RA

C-RATES-RA is used to send four new options for transport configuration for both upstream and downstream. These options will, in general, be closer to the optimum bit rate for the channel than those in C-RATES1, and should be based on the channel information received in R-MSG-RA. A C-RATES-RA message content is not constrained by previous messages, e.g. C-RATES1 and R-MSG-RA.

The format of C-RATES-RA is the same as that of C-RATES1, except that the four-byte prefix ($55\ 55\ 55\ 55_{16}$) is not transmitted, and the signal is transmitted eight bits per symbol, as defined for C-MSG2 (see 11.11.9). The duration of C-RATES-RA is 120 symbols.

The $\{RS_F, R, S, I, FS(\text{LS2})\}$ shall have the following syntax. It is a ten-byte quantity comprising (one byte each):

- The RRSI field contains Reed-Solomon FEC and interleaver parameters. The RRSI field contains a total of 80 bits organized as ten entries each of eight bits. The second entry in the RRSI field contains the parameter RS_I: The number of parity bytes per symbol in the downstream transmission direction with RS_I equal to R/S in bits 5 (MSB) to 0 (LSB). The third entry in the RRSI field contains the parameter S; S is the number of DFs per Reed-Solomon codeword in the downstream transmission direction in bits 5 (MSB) to 0 (LSB). The fourth entry contains the parameter I: The downstream interleave depth in codewords. The seventh entry in the RRSI field contains the parameter RS_I: The number of parity bytes per symbol in the upstream transmission direction with RS_I equal to R/S in bits 5 (MSB) to 0 (LSB). The eighth entry in the RRSI field contains the parameter S; S is the number of DFs per Reed-Solomon codeword in the upstream transmission direction in bits 5 (MSB) to 0 (LSB). The ninth entry contains the parameter I: The upstream interleave depth in codewords. All other bits in RRSI shall be set to 0_b.

The four options are transmitted in order of decreasing preference. Table 33 summarizes C-RATES-RA and Table 34 summarizes the RRSI fields of C-RATES-RA.

Table 33/G.992.2 – C-RATES-RA

	Option 1			**Option 2**			**Option 3**			**Option 4**		
	B_F	**B_I**	**RRSI**	**B_F**	**B_I**	**RRSI**	**B_F**	**B_I**	**RRSI**	**B_F**	**B_I**	**RRSI**
Number of bytes	10	10	10	10	10	10	10	10	10	10	10	10

IPR2025-00395
Petitioners' Exhibit 1012
Page 82 of 179

Table 34/G.992.2 – RRSI fields of C-RATES-RA

			<——bits——>							
Entry #	**Field**		**7**	**6**	**5**	**4**	**3**	**2**	**1**	**0**
1	RS_F	Downstream	N/A to Recommendation G.992.2 – set to $\{00000000_b\}$							
2	R		0_b	0_b	value of R [MSB ↔ LSB]					
3	S		0_b	0_b	value of S [MSB ↔ LSB]					
4	I		I_7	I_6	I_5	I_4	I_3	I_2	I_1	I_0
5	FS(LS2)		N/A to Recommendation G.992.2 – set to $\{00000000_b\}$							
6	RS_F	Upstream	N/A to Recommendation G.992.2 – set to $\{00000000_b\}$							
7	R		0_b	0_b	value of R [MSB ↔ LSB]					
8	S		0_b	0_b	value of S [MSB ↔ LSB]					
9	I		I_7	I_6	I_5	I_4	I_3	I_2	I_1	I_0
10	FS(LS2)		N/A to Recommendation G.992.2 – set to $\{00000000_b\}$							

11.11.4 C-CRC-RA1

C-CRC-RA1 is a cyclic redundancy check for detection of errors in the reception of C-RATES-RA1 at the ATU-R. Its relation to C-RATES-RA1 is the same as that of C-CRC3 to C-MSG2 (see 11.11.10). Its 16 bits shall be transmitted in two symbols (see 11.11.9). Following C-CRC-RA1, the ATU-C shall enter state C-MSG-RA.

11.11.5 C-MSG-RA

C-MSG-RA is the same in format as C-MSG1; the bit assignment is as shown in Table 35.

Table 35/G.992.2 – Assignment of 48 bits of C-MSG-RA

Suffix(es) of m_i (Note 1)	**Parameter (Note 2)**
47-44	New ATU-R target noise margin
43-38	ATU-R minimum noise margin (–32 to + 31 dB)
37-32	ATU-R maximum noise margin (–32 to + 31 dB)
31-0	Reserved by ITU-T

NOTE 1 – Within the separate fields the least significant bits have the lowest subscripts.

NOTE 2 – All reserved bits shall be set to 0_b.

NOTE 3 – Minimum and maximum values are defined in Recommendation G.997.1.

NOTE 4 – Only the minimum and maximum ATU-R noise margins are communicated to the ATU-R. This information is needed for the downstream B&G table calculation at the ATU-R. The minimum and maximum ATU-C noise margins are used locally at the ATU-C for the upstream B&G table calculation.

The 48 bits are transmitted in six symbols (see 11.11.9) Following C-MSG-RA the ATU-C shall enter state C-CRC-RA2.

IPR2025-00395
Petitioners' Exhibit 1012
Page 83 of 179

11.11.6 C-CRC-RA2

C-CRC-RA2 is a cyclic redundancy check for detection of errors in the reception of C-MSG-RA at the ATU-R. Its relation to C-MSG-RA is the same as that of C-CRC3 to C-MSG2 (see 11.11.10). Its 16 bits shall be transmitted in two symbols. Following C-CRC-RA2, the ATU-C shall enter state C-REVERB-RA.

11.11.7 C-REVERB-RA

C-REVERB-RA is the same as C-REVERB4. After detection of R-CRC4 the ATU-C shall continue to transmit C-REVERB-RA for at least another 80 symbols before moving to state C-SEGUE-RA.

11.11.8 C-SEGUE-RA

C-SEGUE-RA is the same as C-SEGUE2. Following C-SEGUE-RA the ATU-C shall enter state C-MSG2.

11.11.9 C-MSG2

C-MSG2 transmits a 32-bit message signal to the ATU-R. This message includes the total number of bits per symbol supported, the estimated upstream loop attenuation, and the performance margin with the selected rate option. The message, m, is defined by:

$$m = \{m_{31}, m_{30}, \ldots m_1, m_0\}$$

with m_0 being transmitted first. The message components are defined in the following sub-clauses, and their assigned positions within the composite message, m, are defined in Table 36.

Table 36/G.992.2 – Assignment of 32 bits of C-MSG2

Suffix(es) of m_i (Note 1)	Parameter (Note 2)
31-26	Estimated average loop attenuation
25-22	Reserved by ITU-T
21	Erase all stored profiles
20-16	Performance margin with selected rate option
15-9	Reserved by ITU-T
8-0	Total number of bits supported
NOTE 1 – Within the separate fields the least significant bits have the lowest subscripts. NOTE 2 – All reserved bits shall be set to 0_b.	

A total of four symbol periods are used to communicate the 32-bit message, with eight bits transmitted on each symbol. Two bits are encoded onto each of the subcarriers numbered 43 through 46 using the 4-QAM constellation labelling given in 7.10.3 (for the synchronization symbol) and 11.7.5 (for C-REVERB1). The same two bits are also encoded in the same way onto a set of backup carriers, namely, subcarriers 91 through 94. The least significant byte of the message is transmitted in the first symbol of C-MSG2, with the two least significant bits of each byte encoded onto carriers 43 and 91. In addition, the pilot, subcarrier 64, shall be modulated with (+,+). Following C-MSG2, the ATU-C shall enter signalling state C-CRC3.

11.11.9.1 Estimated average upstream loop attenuation

During channel analysis the ATU-C receiver estimates the upstream channel gain of each subcarrier in preparation for computing the SNR for each tone; it shall also calculate the average loop attenuation. This attenuation is defined as the difference between the maximum aggregate transmit

IPR2025-00395
Petitioners' Exhibit 1012
Page 84 of 179

power of 12.5 dBm minus any power cutback currently in effect and the total received power, rounded to the nearest 0.5 dB.

The attenuation is encoded into bits 31-26 of C-MSG2 as the integer binary representation of twice the attenuation (e.g. if the average attenuation is 21.5 dB, then $\{m_{31}, \ldots m_{26}\} = 101011_b$).

11.11.9.2 Erase all stored profiles

If the ATU-C sets this bit to 1_b, then all profiles as defined in 12.1.1 at the ATU-R shall be erased.

11.11.9.3 Performance margin with selected rate option

The ATU-C receiver shall select one of the rate options sent from the ATU-C during C-RATES-RA with a satisfactory upstream performance margin. This selected option is encoded in C-RATES2. This margin (rounded to the nearest dB) is encoded into bits 20-16 of C-MSG2 using a conventional binary representation (e.g. if the margin is 9 dB then $\{m_{20}, \ldots m_{16}\} = 01001_b$).

11.11.9.4 Total number of bits per symbol supported

The ATU-C receiver shall also calculate the maximum number of bits per symbol that the upstream channel can support with the performance margin defined in C-MSG-RA at an error rate of 10^{-7}. This number is encoded into bits 8-0 using a conventional binary representation (e.g. if the maximum number of bits that can be supported is 127 (data rate = 508 kbit/s), $\{m_8, \ldots m_0\} = 001111111_b$).

11.11.10 C-CRC3

C-CRC3 is a cyclic redundancy check for detection of errors in the reception of C-MSG2 at the ATU-R. The crc polynomial c(D) and generator polynomial g(D) are the same as for C-CRC1, as defined in 11.9.3. These 16 bits shall be transmitted in two symbol periods using the method described in 11.11.9. Following C-CRC3, the ATU-C shall enter state C-RATES2.

11.11.11 C-RATES2

C-RATES2 is the reply to R-RATES-RA. It combines the selected downstream option with the selected upstream option. It thus transmits the final decision on the rates that will be used in both directions.

The ATU-C shall not change the downstream option from that selected in R-RATES2.

The length of C-RATES2 is eight bits, and the bit pattern for C-RATES2 is shown in Table 37. Other bit patterns that are not specified in the table are reserved for future use. If none of the options requested during C-RATES1 or C-RATES-RA can be implemented, ATU-C then invokes the Initialization Reset Procedure for retraining. One symbol period is used to transmit these eight bits using the method described in 11.11.9. Following C-RATES2, the ATU-C shall enter signalling state C-CRC4.

IPR2025-00395
Petitioners' Exhibit 1012
Page 85 of 179

Table 37/G.992.2 – Bit pattern for C-RATES2

(Downstream, upstream)	Bit pattern for C-RATES2 (MSB first) (Note 1)
(option 1, option 1)	00010001_b
(option 1, option 2)	00010010_b
(option 1, option 3)	00010100_b
(option 1, option 4)	00011000_b
(option 2, option 1)	00100001_b
(option 2, option 2)	00100010_b
(option 2, option 3)	00100100_b
(option 2, option 4)	00101000_b
(option 3, option 1)	01000001_b
(option 3, option 2)	01000010_b
(option 3, option 3)	01000100_b
(option 3, option 4)	01001000_b
(option 4, option 1)	10000001_b
(option 4, option 2)	10000010b
(option 4, option 3)	10000100_b
(option 4, option 4)	10001000_b
all options fail	00000000_b
NOTE – All other bit patterns that are not shown are reserved for future use by ITU-T.	

If it is determined that none of the four options can be implemented with the connection the ATU-C shall invoke the Initialization Reset Procedure for retraining.

11.11.12 C-CRC4

C-CRC4 is a cyclic redundancy check for detection of errors in the reception of C-RATES2 at the ATU-R. Its relation to C-RATES2 is the same as that of C-CRC3 to C-MSG2. Its 16 bits shall be transmitted in two symbols (see 11.11.11). Following C-CRC4, the ATU-C shall enter state C-B&G.

11.11.13 C-B&G

C-B&G shall be used to transmit to the ATU-R the bits and gains information, $\{b_1, g_1, b_2, g_2, ... b_{31}, g_{31}\}$, that are to be used on the upstream carriers. b_i indicates the number of bits to be coded by the ATU-R transmitter onto the ith upstream carrier; g_i indicates the scale factor, relative to the gain that was used for that carrier during the transmission of R-MEDLEY, that shall be applied to the ith upstream carrier. Because no bits or energy will be transmitted at dc or one-half the sampling rate, b_0, g_0, b_{32} and g_{32} are all presumed to be zero and shall not be transmitted.

Each b_i shall be represented as an unsigned 4-bit integer, with valid b_is lying in the range of zero to N_{upmax}, the maximum number of bits that the ATU-R is prepared to modulate onto any subcarrier, which is communicated in R-MSG1.

Each g_i shall be represented as an unsigned 12-bit fixed-point quantity, with the binary point assumed just to the right of the third most significant bit. For example, a g_i with binary representation (most significant bit listed first) $001_b.010000000_b$ would instruct the ATU-R to scale

IPR2025-00395
Petitioners' Exhibit 1012
Page 86 of 179

the constellation for carrier i, by a gain factor of 1.25, so that the power in that carrier shall be 1.94 dB higher than it was during R-MEDLEY.

For subcarriers on which no data are to be transmitted, and the receiver will never allocate bits (e.g. out-of-band subcarriers) both b_i and g_i shall be set to zero (0000_b and 00000000.0000_b, respectively) For subcarriers on which no data are to be currently transmitted, but the receiver may allocate bits later (e.g. as a result of an SNR improvement), the b_i shall be set to zero and the g_i to a value in the 0.19 to 1.33 range (000.001100000_b to 001.010101011_b).

The C-B&G information shall be mapped in a 496-bit (62 byte) message m defined by:

$$m = \{m_{495}, m_{494}, \ldots, m_1, m_0\} = \{g_{31}, b_{31}, \ldots g_1, b_1\},$$

with the MSB of b_i and g_i in the higher m index and m_0 being transmitted first. The message m shall be transmitted in 62 symbols, using the transmission method as described in 11.11.9.

Following C-B&G, the ATU-C shall enter the state C-CRC5.

11.11.14 C-CRC5

C-CRC5 is a cyclic redundancy check for detection of errors in the reception of C-B&G at the ATU-R. Its relation to C-B&G is the same as that of C-CRC3 to C-MSG2. Its 16 bits shall be transmitted in two symbols (see 11.11.9). Following C-CRC5, the ATU-C shall enter state C-REVERB5.

11.11.15 C-REVERB5

C-REVERB5 is the same as C-REVERB4 (see 11.11.1). The only difference is the maximum duration of 4000 symbols. The duration of C-REVERB5 depends upon the state of the ATU-R and the internal processing of the ATU-C. The ATU-C shall transmit C-REVERB5 until it has received, checked the reliability of, and established in the ATU-C transmitter, the downstream bits and gains information contained in R-B&G. If bits and gains information is not received, checked and established within 4000 symbols, the ATU-C shall timeout and invoke the Initialization Reset Procedure. The ATU-C shall enter state C-SEGUE3 as soon as it is prepared to transmit according to the conditions specified in R-B&G.

11.11.16 C-SEGUE3

C-SEGUE3 is used to notify the ATU-R that the ATU-C is about to enter the steady-state signalling state C-SHOWTIME. The signal C-SEGUE3 is the same as C-SEGUE2 (see 11.11.2). The duration of C-SEGUE3 is ten symbol periods. Following C-SEGUE3 the ATU-C has completed initialization and shall enter state C-SHOWTIME.

11.12 Exchange – ATU-R

During exchange there are three cases when the ATU-R shall reset itself: Timeouts, no acceptable options in an R-RATES2 message, and error detection by a crc checksum. Both shall invoke the Initialization Reset Procedure. The exchange procedure is partly synchronized between ATU-C and ATU-R, and partly interactive. During the interactive parts (R-REVERB-RA, R-REVERB5 and R-REVERB6) a timeout shall occur when the time in either state exceeds 4000 symbols.

11.12.1 R-SEGUE3

The signal R-SEGUE3 is the same as R-SEGUE2 (see 11.10.3). The duration of R-SEGUE3 is ten symbol periods. Following R-SEGUE3 the ATU-R shall enter state R-MSG-RA to begin a second exchange of rates.

IPR2025-00395
Petitioners' Exhibit 1012
Page 87 of 179

11.12.2 R-MSG-RA

R-MSG-RA is a similar to R-MSG2, but expanded by 48 bits. The bit assignments are as shown in Table 38.

Table 38/G.992.2 – Assignment of 80 bits of R-MSG-RA

Suffix(es) of m_i (Note 1)	Parameter (Note 2)
79-56	Reserved by ITU-T
55-49	Number of RS overhead bytes, (R)
48-40	Number of RS payload bytes, K
39-32	Number of tones carrying data (ncloaded)
31-25	Estimated average loop attenuation
24-21	Coding gain
20-16	Performance margin with selected rate option
15-14	Reserved by ITU-T
13-12	Reserved by ITU-T
11-0	Total number of bits per DMT symbol, B_{max}.
NOTE 1 – Within the separate fields the least significant bits have the lowest subscripts. NOTE 2 – All reserved bits shall be set to 0_b.	

11.12.2.1 Number or RS overhead bytes (R)

This is the R (as defined in 7.5) parameter used to calculate B_{max}. This parameter shall be calculated with $S = 1$.

11.12.2.2 Number of RS payload bytes (K)

This is the K (as defined in 7.3.3) parameter used to calculate B_{max}. This parameter shall be calculated with $S = 1$.

11.12.2.3 Number or tones carrying data (ncloaded)

This is the number of subcarriers with $b_i > 0$ used to calculate B_{max}.

11.12.2.4 Estimated average loop attenuation

This parameter shall be defined as in R-MSG2; see 11.12.8.

11.12.2.5 Coding gain

The coding gain of RS FEC coding is used to calculate B_{max}. The coding gain is expressed in steps of 0.5 dB in the 0 to 7.5 dB range.

11.12.2.6 Performance margin with selected rate option

This parameter shall be defined as in R-MSG2; see 11.12.8. If R-RATES-RA indicates "no option selected", then this parameter shall be set to 0 or reflect the performance margin in dB corresponding to B_{max} (which may be 0 to 3 dB above the minimum requested SNR margin). This field is encoded as in 11.12.8.3.

11.12.2.7 Total number of bits supported (B_{max})

This parameter shall be defined as in R-MSG2; see 11.12.8.

IPR2025-00395
Petitioners' Exhibit 1012
Page 88 of 179

11.12.3 R-CRC-RA1

R-CRC-RA1 is a cyclic redundancy check for detection of errors in the reception of R-MSG-RA. Its relation to R-MSG-RA is the same as that of R-CRC3 to R-MSG2. Following R-CRC-RA1, the ATU-R shall enter state R-RATES-RA.

11.12.4 R-RATES-RA

R-RATES-RA is the reply to C-RATES1 based on the results of the downstream channel analysis and is similar to R-RATES2. Instead of listing the data rates and formats as in C-RATES1, the ATU-R does one of the following:

– Sends back only the option number of the highest data rate that can be supported based on the measured SNR of the downstream channel (not taking into account impulse noise resilience).

– Indicates that no option selection was made at this time, but will be made later based on C-RATES-RA information.

– Indicates none of the options requested during C-RATES1 can be implemented.

As in R-RATES2, four bits are used for the option number. A total of eight bits are used for R-RATES-RA, and the bit patterns are shown in Table 39. Other bit patterns that are not specified in the table are reserved for future use. One symbol period is used to transmit these eight bits using the method described in 11.12.8. Following R-RATES-RA, the ATU-R shall enter state R-CRC-RA2.

The format of R-RATES-RA is the same as R-RATES2, except for the additional bit pattern used to indicate "no option selected".

Table 39/G.992.2 – Bit pattern for R-RATES-RA

Downstream	Bit pattern for R-RATES2 (MSB first)
option 1	00010001_b
option 2	00100010_b
option 3	01000100_b
option 4	10001000_b
no option selected	00000001_b
all options fail	00000000_b
NOTE – All other bit patterns that are not shown are reserved by ITU-T.	

11.12.5 R-CRC-RA2

R-CRC-RA2 is a cyclic redundancy check for detection of errors in the reception of R-RATES-RA. Its relation to R-RATES-RA is the same as that of R-CRC3 to R-MSG2. Following R-CRC-RA2, the ATU-R shall enter state R-REVERB-RA.

11.12.6 R-REVERB-RA

R-REVERB-RA is the same as R-REVERB3 (see 11.10.2) The duration of R-REVERB-RA depends upon the signalling state of the ATU-C and the internal processing of the ATU-R, but has a maximum of 4000 symbols. The ATU-R shall transmit R-REVERB-RA until it has received and checked the reliability of the upstream bits and gains information contained in C-RATES-RA. After the ATU-R has received C-CRC-RA2, it shall continue to transmit R-REVERB-RA for another 64 symbols. It shall then enter R-SEGUE-RA.

IPR2025-00395
Petitioners' Exhibit 1012
Page 89 of 179

If it has not successfully detected all the control signals within 4000 symbols it shall time out and invoke the Initialization Reset Procedure.

11.12.7 R-SEGUE-RA

R-SEGUE-RA is the same as R-SEGUE4. Following R-SEGUE-RA the ATU-R shall enter state R-MSG2.

11.12.8 R-MSG2

R-MSG2 transmits a 32-bit message signal to the ATU-C. This message includes the total number of bits per symbol supported, the estimated downstream loop attenuation, and the performance margin with the selected rate option. The message, m, is defined by:

$$m = \{m_{31}, m_{30}, \ldots m_1, m_0\}$$

with m_0 being transmitted first. The message components are defined in the following subclauses, and their assigned positions within the composite message, m, are defined in Table 40.

Table 40/G.992.2 – Assignment of 32 bits of R-MSG2

Suffix(es) of m_i (Note 1)	Parameter (Note 2)
31-25	Estimated average loop attenuation
24-22	Reserved by ITU-T
21	Erase all stored profiles
20-16	Performance margin with selected rate option
15-12	Reserved by ITU-T
11-0	Total number of bits supported
NOTE 1 – Within the separate fields the least significant bits have the lowest subscripts. NOTE 2 – All reserved bits shall be set to 0_b.	

A total of four symbol periods are used to communicate the 32-bit message, with eight bits transmitted on each symbol. Two bits are encoded onto each of the subcarriers numbered 10 through 13 using the 4-QAM constellation labelling given in 7.10.3 (for the synchronization symbol) and 11.7.5 (for C-REVERB1). The same two bits are also encoded in the same way onto a set of backup carriers, namely, subcarriers 20 through 23. The least significant byte of the message is transmitted in the first symbol of R-MSG2, with the two least significant bits of each byte encoded onto carriers 10 and 20. Following R-MSG2, the ATU-R shall enter state R-CRC3.

11.12.8.1 Estimated average downstream loop attenuation

During channel analysis, the ATU-R receiver estimates the downstream channel gain of each subcarrier in preparation for computing the SNR for each tone; it shall also calculate the average loop attenuation. This attenuation is defined as the difference between ATU-C maximum aggregate transmit power of 17.2 dBm minus any power cutback currently in effect and the total received power, rounded to the nearest 0.5 dB.

The attenuation is encoded into bits 31-25 of R-MSG2 as the integer binary representation of twice the attenuation (e.g. if the average attenuation is 21.5 dB, then $\{m_{31}, \ldots m_{25}\} = 0101011_b$).

11.12.8.2 Erase all stored profiles

If the ATU-R sets this bit to 1_b, then all profiles as defined in 12.1.1 at the ATU-C shall be erased.

IPR2025-00395
Petitioners' Exhibit 1012
Page 90 of 179

11.12.8.3 Performance margin with selected rate option

The ATU-R receiver shall select one of the rates options sent from the ATU-C during C-RATES-RA with a satisfactory downstream margin. This selected option is encoded in R-RATES2. This margin (rounded to the nearest dB) is encoded into bits 20-16 of R-MSG2 using a conventional binary representation (e.g. if the margin is 9 dB, then $\{m_{20}, \ldots m_{16}\} = 01001_b$).

11.12.8.4 Total number of bits per symbol supported

The ATU-R receiver shall also calculate the maximum number of bits per symbol that the downstream channel can support with the performance margin defined in C-MSG-RA (at an error rate of 10^{-7}). This number is encoded into bits 11-0 using a conventional binary representation (e.g. if the maximum number of bits that can be supported is 1724 (data rate = 6896 kbit/s), $\{m_{11}, \ldots m_0\} = 11010111100_b$).

11.12.9 R-CRC3

R-CRC3 is a cyclic redundancy check for detection of errors in the reception of R-MSG2 at the ATU-C. The crc polynomial c(D) and generator polynomial g(D) are as described in 11.9.3. These bits are transmitted in two symbol periods using the method described in 11.12.8. Following R-CRC3, the ATU-R shall enter state R-RATES2.

11.12.10 R-RATES2

R-RATES2 is the reply to C-RATES-RA based on the results of the downstream channel analysis. Instead of listing the data rates and formats as in C-RATES1, the ATU-R sends back only the option number of the selected data rate that can be supported based on the measured SNR of the downstream channel (not taking into account impulse noise resilience). As in C-RATES2, four bits are used for the option number. A total of eight bits are used for R-RATES2, and the bit patterns are shown in Table 41. If none of the options requested during C-RATES1 can be implemented, the ATU-R shall invoke the Initialization Reset Procedure. One symbol period is used to transmit these eight bits using the method described in 11.12.8. Following R-RATES2, the ATU-R shall enter state R-CRC4.

Table 41/G.992.2 – Bit pattern for R-RATES2

Downstream	Bit pattern for R-RATES2 (MSB first)
option 1	00010001_b
option 2	00100010_b
option 3	01000100_b
option 4	10001000_b
all options fail	00000000_b
NOTE – All other bit patterns that are not shown are reserved by ITU-T.	

If it is determined that none of the four options can be implemented with the connection, the ATU-R shall invoke the Initialization Reset Procedure for retraining.

11.12.11 R-CRC4

R-CRC4 is a cyclic redundancy check for detection of errors in the reception of R-RATES2 at the ATU-C. Its relation to R-RATES2 is the same as that of R-CRC3 to R-MSG2. Following R-CRC4, the ATU-R shall enter state R-REVERB5.

IPR2025-00395
Petitioners' Exhibit 1012
Page 91 of 179

11.12.12 R-REVERB5

R-REVERB5 is the same as R-REVERB3 (see 11.10.2). The duration of R-REVERB5 depends upon the signalling state of the ATU-C and the internal processing of the ATU-R, but has a maximum of 4000 symbols. The ATU-R shall transmit R-REVERB5 until it has received and checked the reliability of the upstream bits and gains information contained in C-B&G. After the ATU-R has received C-CRC5, it shall continue to transmit R-REVERB5 for another 64 symbols. It shall then enter R-SEGUE4. If it has not successfully detected all the control signals within 4000 symbols, it shall timeout and invoke the Initialization Reset Procedure.

11.12.13 R-SEGUE4

The purpose of R-SEGUE4 is to notify the ATU-C that the ATU-R is about to enter R-B&G. R-SEGUE4 is the same as R-SEGUE3 (see 11.12.1). The duration of R-SEGUE4 is ten symbol periods. Following R-SEGUE4 the ATU-R shall enter state R-B&G.

11.12.14 R-B&G

The purpose of R-B&G is to transmit to the ATU-C the bits and gains information, $\{b_1, g_1, b_2, g_2, \ldots b_{127}, g_{127}\}$, to be used on the downstream subcarriers. b_i indicates the number of bits to be coded by the ATU-C transmitter onto the ith downstream subcarrier; g_i indicates the scale factor that shall be applied to the ith downstream subcarrier, relative to the gain that was used for that carrier during the transmission of C-MEDLEY. Because no bits or energy will be transmitted at DC or one-half the sampling rate, b_0, g_0, b_{128}, and g_{128} are all presumed to be zero, and are not transmitted. Because subcarrier 64 is reserved as the pilot tone, b_{64} shall be set to 0 and g_{64} shall be set to g_{sync}. The value g_{sync} represents the gain scaling applied to the sync symbol and is defined in Annexes A, B and C.

Each b_i is represented as an unsigned four-bit integer, with valid b_i lying in the range of zero to $N_{downmax}$, the maximum number of bits that the ATU-C is prepared to modulate onto any subcarrier, which is communicated in C-MSG1.

Each g_i is represented as an unsigned 12-bit fixed-point quantity, with the binary point assumed just to the right of the third most significant bit. For example, a g_i with binary representation (most significant bit listed first) 001.010000000_b would instruct the ATU-C to scale the constellation for carrier i by a gain factor of 1.25, so that the power in that carrier shall be 1.94 dB higher than it was during C-MEDLEY.

For subcarriers on which no data are to be transmitted, and the receiver will never allocate bits (e.g. out-of-band subcarriers) both b_i and g_i shall be set to zero (0000_b and 00000000.0000_b, respectively) For subcarriers on which no data are to be currently transmitted, but the receiver may allocate bits later (e.g. as a result of an SNR improvement), the b_i shall be set to zero and the g_i to a value in the 0.19 to 1.33 range (000.001100000_b to 001.010101011_b).

The R-B&G information shall be mapped in a 4080-bit (510 byte) message m defined by:

$$m = \{m_{4079}, m_{4078}, \ldots, m_1, m_0\} = \{g_{255}, b_{255}, \ldots g_1, b_1\},$$

with the MSB of b_i and g_i in the higher m index and m_0 being transmitted first. The message m shall be transmitted in 510 symbols, using the transmission method as described in 11.12.8.

The b_i and g_i values for $i \geq 129$ and $i \leq 255$ shall be set to 0.

Following R-B&G, the ATU-C shall enter the state R-CRC5.

IPR2025-00395
Petitioners' Exhibit 1012
Page 92 of 179

11.12.15 R-CRC5

R-CRC5 is a cyclic redundancy check for detection of errors in the reception of R-B&G at the ATU-C. Its relation to R-B&G is the same as that of R-CRC3 to R-MSG2. Following R-CRC5, the ATU-R shall enter state R-REVERB6.

11.12.16 R-REVERB6

R-REVERB6 is the same as R-REVERB3 (see 11.10.2). The duration of R-REVERB6 depends upon the signalling state of the ATU-C and the internal processing of the ATU-R, but has a maximum of 4000 symbols. The ATU-R shall transmit R-REVERB6 until it has detected all ten symbols of C-SEGUE3; it shall then enter R-SEGUE5. If it has not successfully detected C-SEGUE3 within 4000 symbols, it shall time out and invoke the Initialization Reset Procedure.

11.12.17 R-SEGUE5

The purpose of R-SEGUE5 is to notify the ATU-C that the ATU-R is about to enter the steady-state signalling state R-SHOWTIME. R-SEGUE5 is identical to R-SEGUE3 (see 11.12.1). The duration of R-SEGUE5 is ten symbol periods. Following R-SEGUE5 the ATU-R has completed initialization and shall enter state R-SHOWTIME.

11.13 Details of initialization timing

The requirements for the initialization sequence (as defined in 11.1 through 11.12) are shown in Figures 27 and 28. Figure 27 shows the first part of the initialization sequence, up to C-MEDLEY and R-MEDLEY. Figure 28 shows the rest of the initialization sequence.

IPR2025-00395
Petitioners' Exhibit 1012
Page 93 of 179

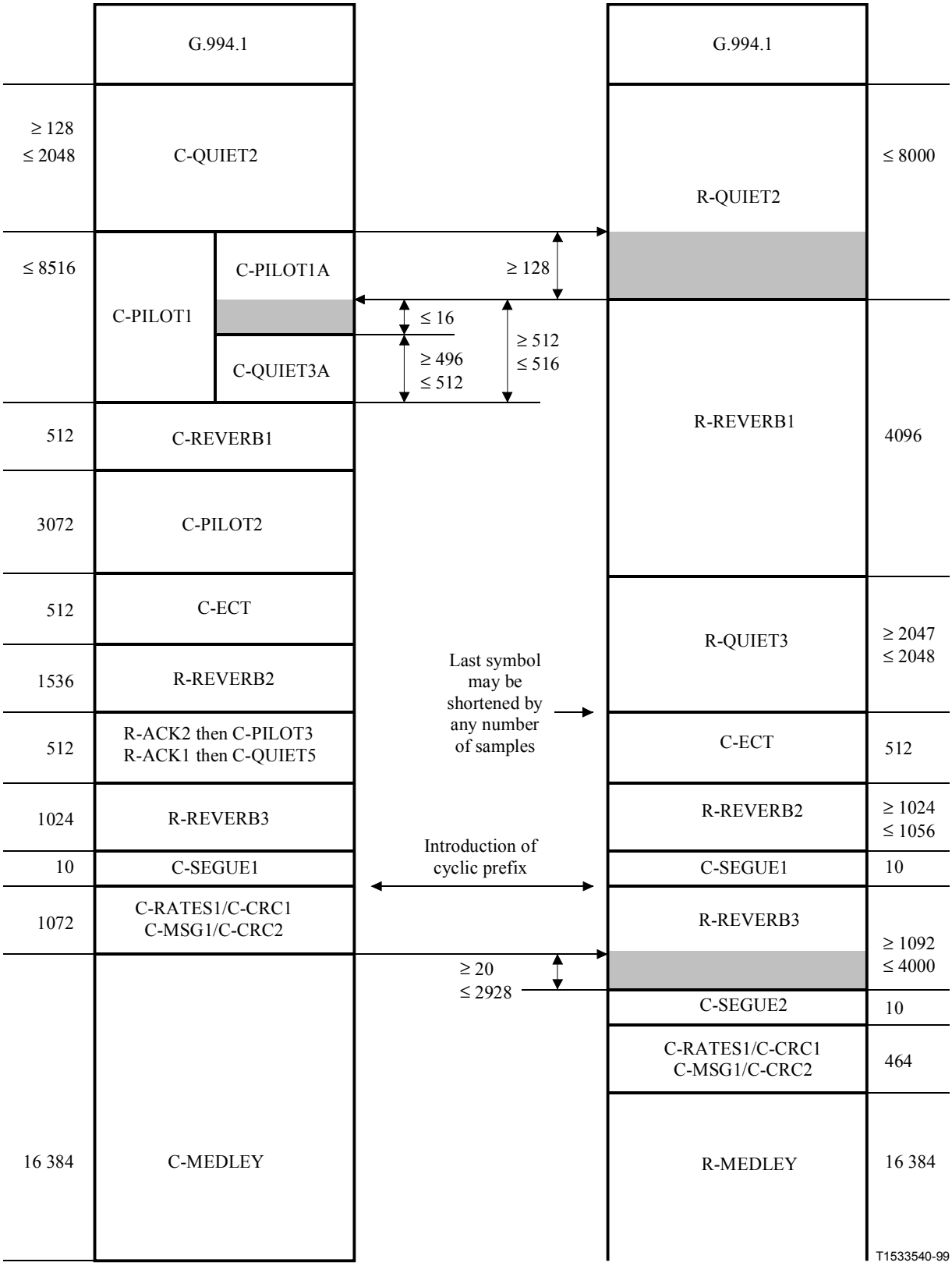

Figure 27/G.992.2 – Timing diagram of initialization sequence *(part 1)*

IPR2025-00395
Petitioners' Exhibit 1012
Page 94 of 179

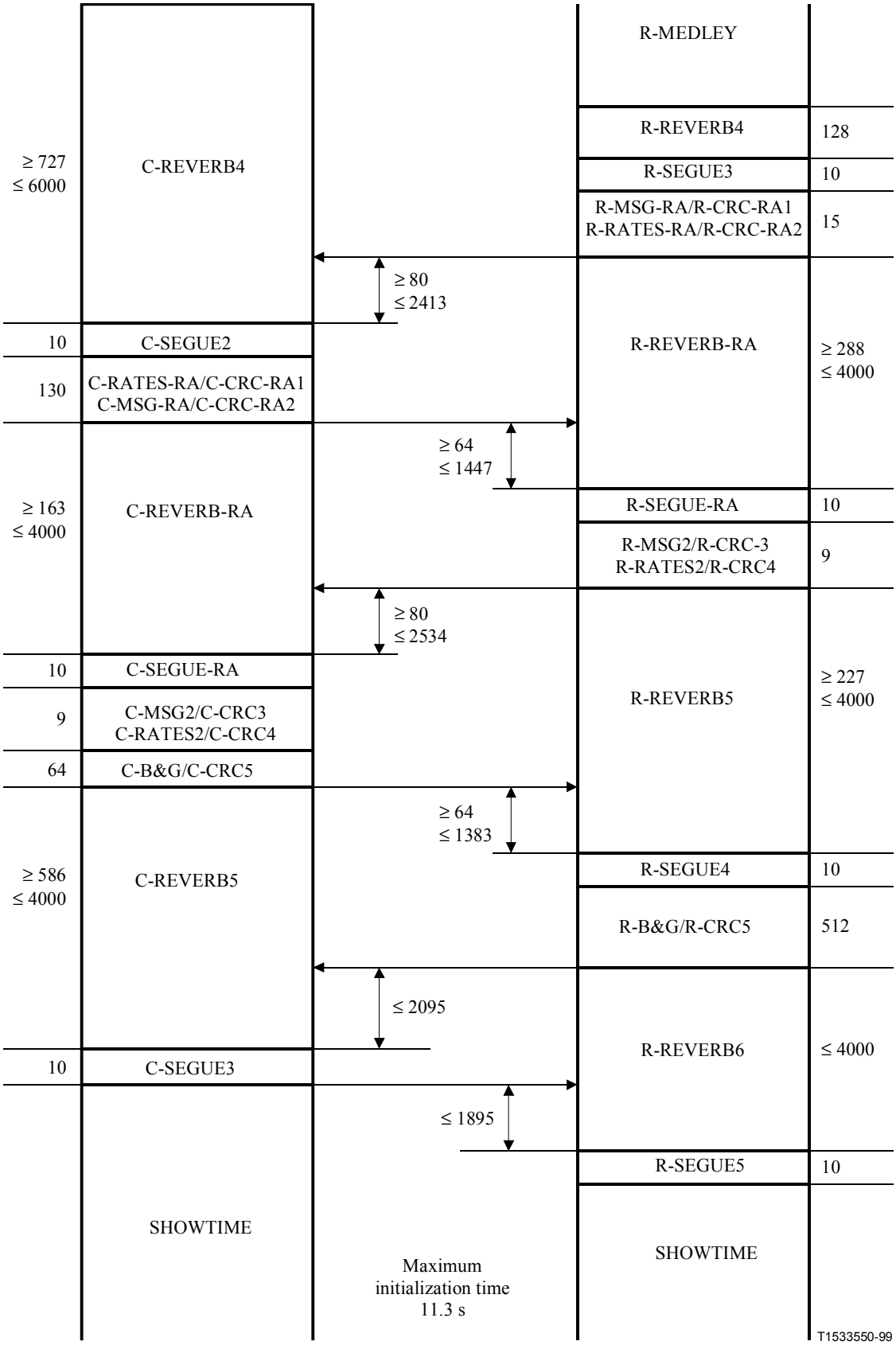

Figure 28/G.992.2 – Timing diagram of initialization sequence *(part 2)*

IPR2025-00395
Petitioners' Exhibit 1012
Page 95 of 179

12 Fast Retrain

12.1 Fast Retrain overview

A Fast Retrain Procedure is defined to adapt transmission characteristics to changing line conditions caused by e.g. phone on/off hook transitions. The Fast Retrain Procedure is also used in an Escape from Handshake to Fast Retrain and in Power Management transitions.

Figure 29 shows the flowchart of the various components of the Fast Retrain Procedure and how it relates to the Initialization procedures in clause 11.

If errors occur during SHOWTIME, a Fast Retrain Procedure may also be invoked.

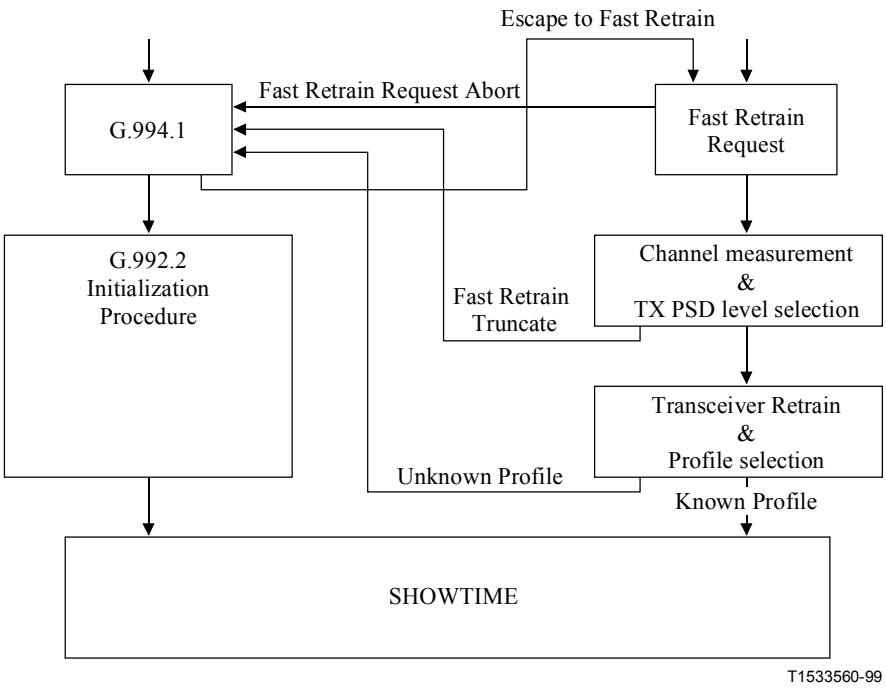

Figure 29/G.992.2 – Flowchart of Fast Retrain

12.1.1 Profile requirements

The Fast Retrain Procedure is based on the concept of stored profiles.

The ATU shall support a minimum of two profiles, being profiles zero and one. A maximum of 16 profiles may be supported, the highest profile number being 15.

The profiles shall at least contain the following information:

- B&G tables (as defined in 11.11.13 and 11.12.14);
- FEC parameters R and S (as defined in 7.5);
- Interleaver depth D (as defined in 7.6).

12.2 Definition of Fast Retrain signals

The following signals are used in the Fast Retrain Procedure and are defined as:

- R-RECOV is a single tone signal corresponding to subcarrier 20 without cyclic prefix.
- C-RECOV is a single tone signal corresponding to subcarrier 68 without cyclic prefix accompanied by the pilot subcarrier 64.

IPR2025-00395
Petitioners' Exhibit 1012
Page 96 of 179

- C-REVERB-FR1 is similar to C-REVERB1.
- R-MSG-FR1 is a 16-bit message modulated using one bit per symbol modulation in the same manner as R-MSG1 in 11.10.6.
- The R-MSG-FR1 message, m, is defined by:

$$m = \{u_7, \ldots, u_1, u_0, d_7, \ldots, d_1, d_0\}$$

Bits d_4 to d_0 (LSB) indicate the Relative Downstream Fast Retrain Power Cutback PSD level and represent the power cutback in 2-dB steps (maximum of 62 dB power cutback). Bit d_5 is the "Fast Retrain Truncate" bit (see 12.7) and is used to indicate that the ATU-R requests to truncate the fast retrain sequence and exit to the full initialization sequence. Bits d_7 and d_6 are reserved and set to 0_b. The least significant bit d_0 is transmitted first. Table 42 defines the relationship between the PSD level and the values for $\{d_4, d_3, d_2, d_1, d_0\}$.

Table 42/G.992.2 – Relative Downstream Fast Retrain Power Cutback

Decimal value of $\{d_4, d_3, d_2, d_1, d_0\}$	Relative Downstream Fast Retrain Power Cutback (dB)
0	0
1	2
…	…
31	62

Bits u_4 to u_0 (LSB) indicate the Absolute Upstream Fast Retrain Power Cutback PSD level and represent the power cutback in 2-dB steps (maximum of 62 dB power cutback). Bits u_7 to u_5 are reserved and set to 0_b. The least significant bit, u_0, is transmitted first. Table 43 defines the relationship between the PSD levels and the values for $\{u_4, u_3, u_2, u_1,$ and $u_0\}$.

Table 43/G.992.2 – Absolute Upstream Fast Retrain Power Cutback

Decimal value of $\{u_4, u_3, u_2, u_1, u_0\}$	Absolute Upstream Fast Retrain Power Cutback (dB)
0	0
1	2
…	…
31	62

- R-CRC-FR1 relates to R-MSG-FR1 as R-CRC2 relates to R-MSG1.
- C-MSG-FR1 is a 16-bit message modulated using one bit per symbol modulation, in the same manner as C-MSG1 in 11.9.4.

The message, m, is defined by:

$$m = \{b_{15}, \ldots, b_1, b_0\}$$

Bits b_4 to b_0 indicate the Fast Retrain Politeness Power Cutback (maximum of 62 dB power cutback) with respect to the Nominal downstream PSD Level as used by the preceding C-REVERB-FR1 signal. Bit b_5 is the "Fast Retrain Truncate" bit and is used to indicate that the ATU-C requests to truncate the Fast Retrain Procedure and exit to the Initialization procedure. The other bits are reserved and set to 0_b. The least significant bit, b_0, is

IPR2025-00395
Petitioners' Exhibit 1012
Page 97 of 179

transmitted first. Table 44 defines the relationship between the Fast Retrain Politeness Power Cutback levels and the values for $\{b_4, b_3, b_2, b_1, b_0\}$.

Table 44/G.992.2 – Fast Retrain Politeness Power Cutback

Decimal value of $\{b_4, b_3, b_2, b_1, b_0\}$	Fast Retrain Politeness Power Cutback (dB)
0	0
1	2
…	…
31	62

- C-CRC-FR1 relates to C-MSG-FR1 as C-CRC2 relates to C-MSG1 in 11.10.6.
- R-MSG-FR2 is a 16-bit message indicating the downstream line profile selected by the ATU-R. The modulation method is identical to R-MSG-FR1.

  The message, m, is defined by:

  $$m = \{m_{15}, m_{14}, \ldots, m_1, m_0\}$$

  Bits m_3 to m_0 represent the line profile index (up to 16 profiles, with profile index LSB in m_0). Bit m_4 is used to indicate a "Known Profile" (0_b) or an "Unknown Profile"(1_b).The other bits are reserved and set to 0_b. The least significant bit, m_0, is transmitted first.
- R-CRC-FR2 relates to R-MSG-FR2 as R-CRC2 relates to R-MSG1.
- C-MSG-FR2 is a 16-bit message indicating the upstream line profile selected by the ATU-C. The modulation method is identical to C-MSG-FR1.

  The message, m, is defined by:

  $$m = \{m_{15}, m_{14}, \ldots, m_1, m_0\}$$

  with m_0 being the least significant bit, being transmitted first. Bits m_3 to m_0 represent the line profile index (up to 16 profiles, with profile index LSB in m_0). Bit m_4 is used to indicate an "Known Profile" (0_b) or an "Unknown Profile"(1_b). The other bits are reserved and set to 0_b. The least significant bit, m_0, is transmitted first.
- C-CRC-FR2 relates to C-MSG-FR2 as C-CRC2 relates to C-MSG1.

12.2.1 Fast Retrain Signal power levels

12.2.1.1 ATU-C Fast Retrain Signal power levels

C-RECOV shall be transmitted at Nominal level.

C-REVERB-FR1 shall be transmitted at (– 40 – Fast Retrain Politeness Power Cutback) dBm/Hz level. The Fast Retrain Politeness Power Cutback level is obtained using Table 25. For this purpose, the average upstream loop attenuation may be estimated on measurement of R-REVERB1, R-RECOV and/or the ATU-R G.994.1 tones.

C-PILOT-FR1, C-REVERB-FR2, C-SEGUE-FR1, C-MSG-FR1 and C-CRC-FR1 are sent at the C-REVERB-FR1 PSD level.

All signals starting at C-REVERB-FR3 through C-SEGUE-FR4 are transmitted at (–40 – Absolute Downstream Fast Retrain Power Cutback) dBm/Hz PSD level. However, because C-ECT-FR is a vendor-defined signal, the PSD specification shall only be interpreted as a maximum.

IPR2025-00395
Petitioners' Exhibit 1012
Page 98 of 179

12.2.1.2 ATU-R Fast Retrain Signal power levels

R-RECOV shall be transmitted at Nominal level.

All signals starting at R-REVERB-FR1 through R-CRC-FR1 are transmitted at vendor-discretionary PSD levels less than or equal to –38 dBm/Hz.

All signals starting at R-REVERB-FR3 through R-SEGUE-FR5 are transmitted at (– 38 – Absolute Upstream Fast Retrain Power Cutback) dBm/Hz PSD level. However, because R-ECT-FR is a vendor-defined signal, the PSD specification shall only be interpreted as a maximum.

12.3 Fast Retrain Procedure

12.3.1 ATU-C initiated from SHOWTIME

Figures 30 and 31 show the timing diagrams for the Fast Retrain with the ATU-C initiating the procedure. Time-outs C-TO1, C-TO2, C-TO3, R-TO1 are vendor discretionary. It is advisable to make these durations as short as possible, to keep the interruption of the physical layer to a minimum.

IPR2025-00395
Petitioners' Exhibit 1012
Page 99 of 179

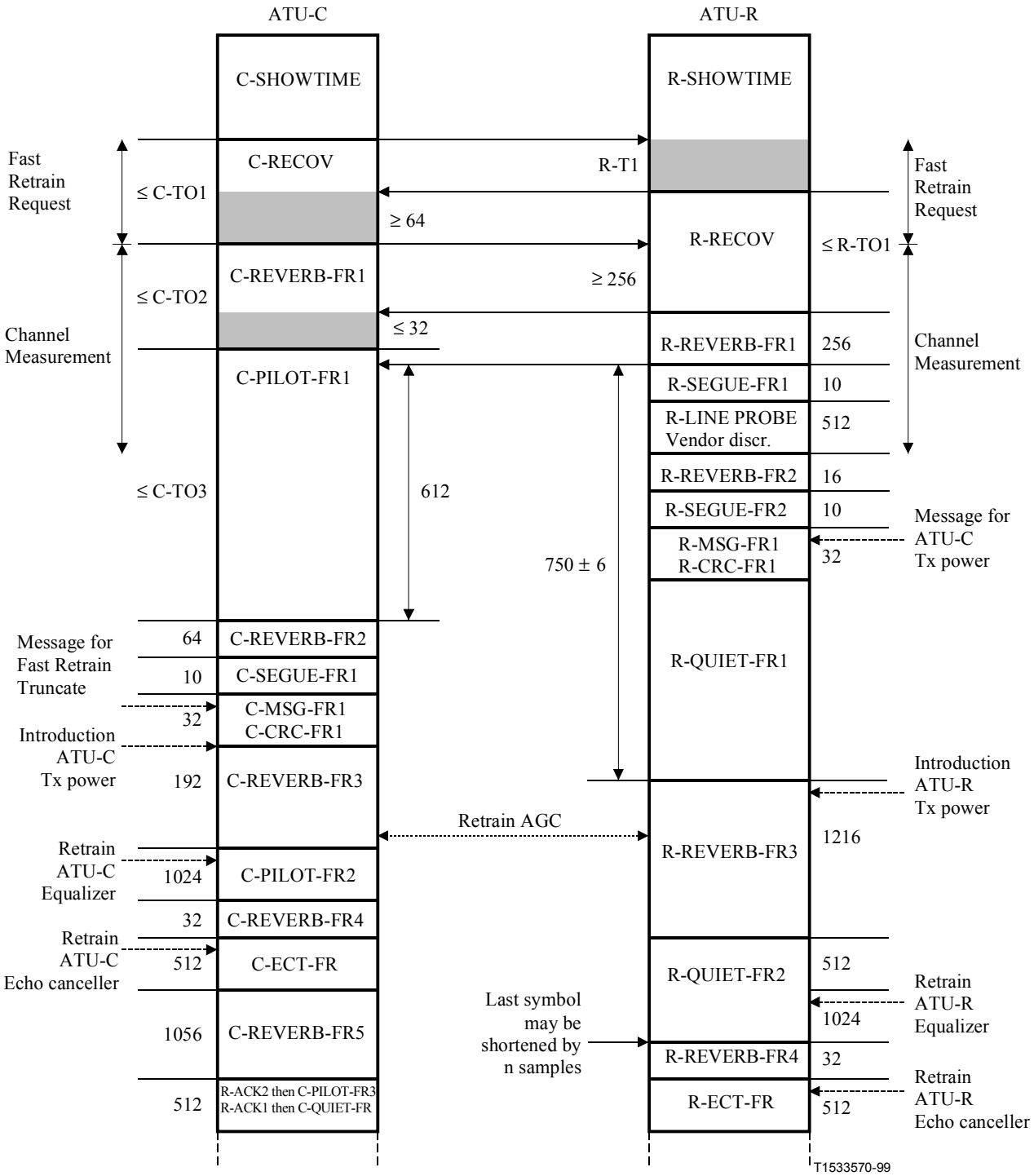

Figure 30/G.992.2 – Timing Diagram of the Fast Retrain Procedure, ATU-C initiated from SHOWTIME *(part 1)*

IPR2025-00395
Petitioners' Exhibit 1012
Page 100 of 179

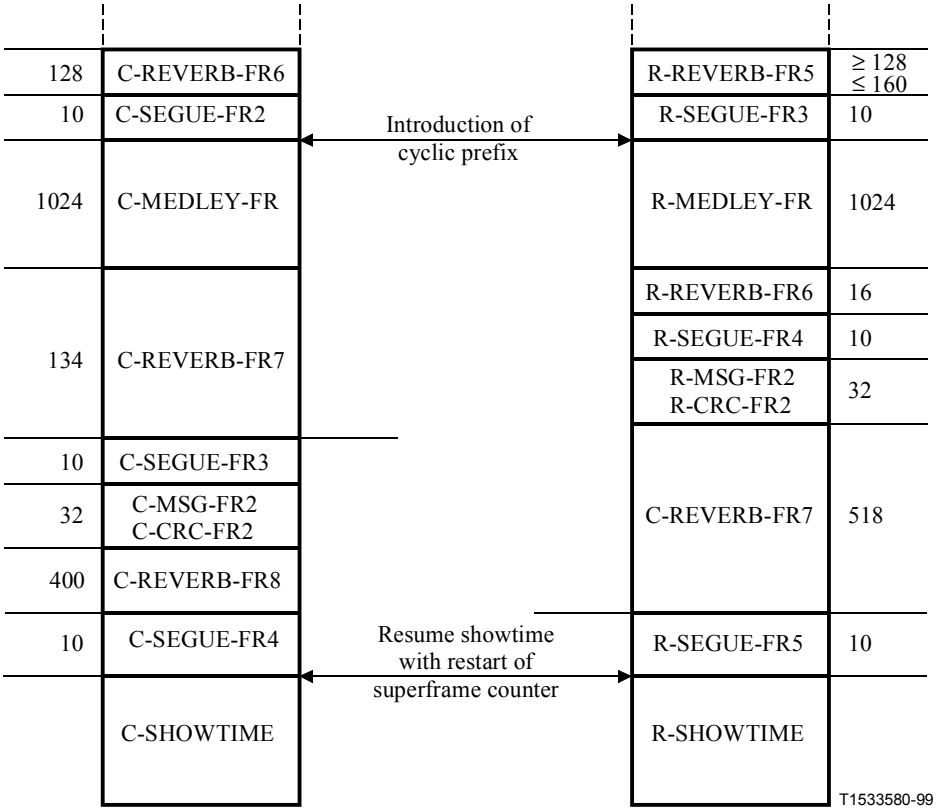

Figure 31/G.992.2 – Timing Diagram of the Fast Retrain Procedure, ATU-C initiated from SHOWTIME *(part 2)*

12.3.1.1 ATU-C Fast Retrain Request

The ATU-R leaves R-SHOWTIME on request from the ATU-C within R-T1 symbols after reception of C-RECOV and begins transmission of R-RECOV.

After the reception of R-RECOV, the ATU-C shall send C-RECOV for a minimum period of 64 symbols, after which it starts to transmit C-REVERB-FR1 (with no cyclic prefix).

Time duration R-T1 is vendor discretionary. It is advisable to make these durations as short as possible because, during an on-off hook event, the R-SHOWTIME signal with a high power level is sent to the telephone set. This could lead to sound levels at the speaker which are unacceptable to the user, especially in the case of headset use.

IPR2025-00395
Petitioners' Exhibit 1012
Page 101 of 179

12.3.2 ATU-R initiated from SHOWTIME

Figure 32 shows the timing diagram for the Fast Retrain mechanism as initiated by the ATU-R.

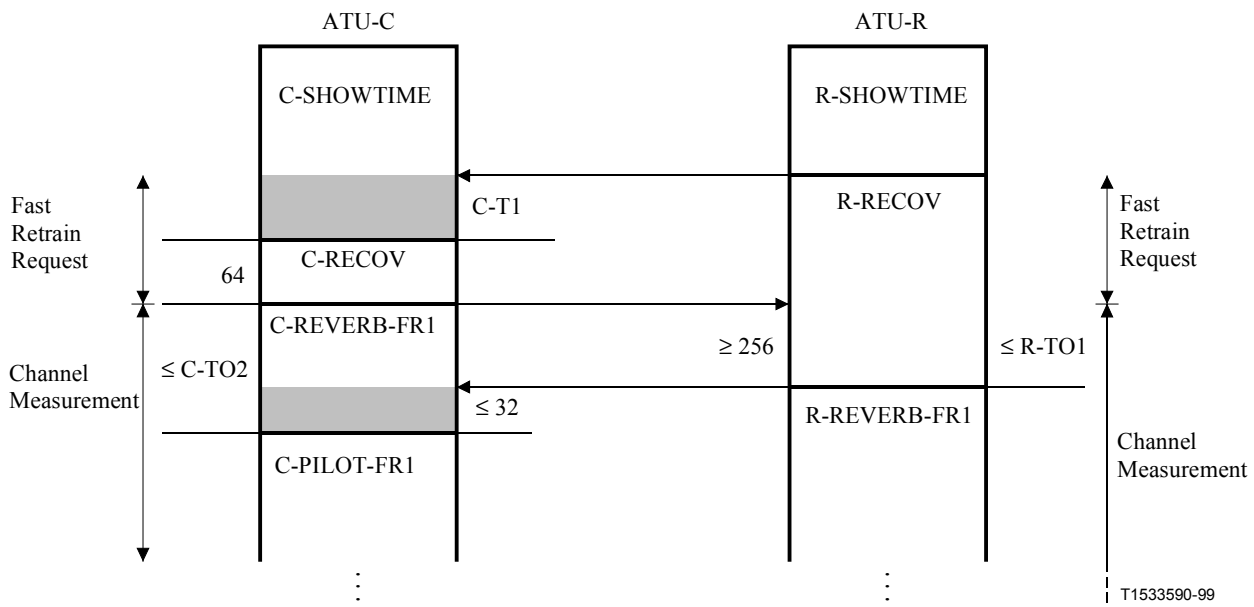

NOTE – Time-outs C-TO1, C-TO2, C-TO3, R-TO1 are vendor discretionary. It is advisable to make these durations as short as possible, to keep the interruption of the physical layer to a minimum.

Figure 32/G.992.2 – Timing diagram of the Fast Retrain Procedure, ATU-R initiated from SHOWTIME

12.3.2.1 ATU-R Fast Retrain Request

The Fast Retrain request is started by the ATU-R leaving R-SHOWTIME autonomously and beginning the transmission of R-RECOV.

After the reception of R-RECOV, the ATU-C leaves C-SHOWTIME and starts C-RECOV within C-T1 symbols after reception of R-RECOV. C-RECOV is transmitted for a period of 64 symbols after which it starts to transmit C-REVERB-FR1 (with no cyclic prefix).

The ATU-R shall detect a minimum of 256 symbols of C-REVERB-FR1 before switching from R-RECOV to R-REVERB-FR1. The ATU-C switches to C-PILOT-FR1 within 32 symbols after reception of the transition of R-RECOV to R-REVERB-FR1. The other parts of the Fast Retrain are identical to the ATU-C initiated case.

NOTE – Time duration C-T1 is vendor discretionary. It is advisable to make these durations as short as possible because, during an on-off hook event, the C-SHOWTIME, C-RECOV and C-REVERB-FR1 signals with high power levels are sent to the telephone set. This could lead to sound levels at the speaker which are unacceptable to the user, especially in the case of headset use.

12.3.3 Channel measurement

The next part of the Fast Retrain procedure consists of a channel measurement.

The ATU-R shall detect a minimum of 256 symbols of C-REVERB-FR1 before switching from R-RECOV to R-REVERB-FR1. The ATU-C switches to C-PILOT-FR1 within 32 symbols after reception of the transition of R-RECOV to R-REVERB-FR1. The R-REVERB-FR1 signal (with no cyclic prefix) is sent for 256 symbols and followed by ten symbols of R-SEGUE-FR1.

IPR2025-00395
Petitioners' Exhibit 1012
Page 102 of 179

The ATU-R follows the R-SEGUE-FR1 signal with 512 symbols of R-LINE PROBE. This signal allows the ATU-R to measure the echo/reflections to appropriately set the upstream Tx power.

12.3.4 Selection of Tx power levels

The second part of the Fast Retrain procedure consists of the selection of the Tx power levels.

After R-LINE-PROBE, the ATU-R sends the R-MSG-FR1 message indicating the new Absolute Upstream Fast Retrain Power Cutback and Relative Downstream Fast Retrain Power Cutback PSD levels via the sequence of 16 symbols of R-REVERB-FR2, ten symbols of R-SEGUE-FR2, and R-MSG-FR1/R-CRC-FR1 (32 symbols). It is followed by R-QUIET-FR1, which is terminated 750 ± 6 symbols after start of R-SEGUE-FR1, after which transmission R-REVERB-FR3 is begun.

At the ATU-C, the C-PILOT-FR1 signal is terminated 612 symbols after reception of R-SEGUE-FR1, after which the ATU-C sends a message indicating a Fast Retrain Truncate bit, via the sequence of 64 symbols of C-REVERB-FR2, ten symbols of C-SEGUE-FR1, and C-MSG-FR1/C-CRC-FR1 (32 symbols). Next, the transmission of C-REVERB-FR3 is begun.

12.3.5 Transceiver retraining

The third part of the Fast Retrain procedure consists of retraining of the transceiver.

At the ATU-R, the R-REVERB-FR3 signal is sent for 1216 symbols, followed by 1536 symbols of R-QUIET-FR2 and 32 symbols of R-REVERB-FR4. The final symbol of R-QUIET-FR2 may be shortened by any number of samples (at a sampling rate of 276 kHz) in order to accommodate the transmitter to receiver frame alignment. R-REVERB-FR4 is immediately followed by 512 symbols of R-ECT-FR, a minimum of 128 and a maximum of 160 symbols of R-REVERB-FR5 and ten symbols of R-SEGUE-FR3.

At the ATU-C, the C-REVERB-FR3 signal is sent for 192 symbols, followed by 1024 of C-PILOT-FR2, 32 symbols of C-REVERB-FR4, 512 symbols of C-ECT-FR, 1056 symbols of C-REVERB-FR5, 512 symbols of C-PILOT-FR3 or C-QUIET-FR, depending on whether R-ACK2 or R-ACK1 was received during a preceding normal initialization procedure, 128 symbols of C-REVERB-FR6 and ten symbols of C-SEGUE-FR2.

The ATU-C after C-SEGUE-FR2 and the ATU-R after R-SEGUE-FR3, introduces the cyclic prefix and switches to transmitting the MEDLEY signal. The signals C-MEDLEY-FR and R-MEDLEY-FR are transmitted for 1024 symbols. This part of the Fast Retrain is intended for SNR measurement.

12.3.6 Profile exchange

The last part of the Fast Retrain Procedure consists of profile exchange.

Following R-MEDLEY-FR, the ATU-R line profile selection is exchanged using 16 symbols of R-REVERB-FR6, followed by ten symbols of R-SEGUE-FR4 and the R-MSG-FR2/R-CRC-FR2 (32 symbols).

Following C-MEDLEY-FR, the ATU-C line profile selection is exchanged using 134 symbols of C-REVERB-FR7, followed by ten symbols of C-SEGUE-FR3 and the C-MSG-FR2/C-CRC-FR2 (32 symbols). Both the ATU-C and the ATU-R have independent profile selections, namely the ATU-C for upstream respectively the ATU-R for downstream.

The ATU-C sends the final sequence consisting of 400 symbols of C-REVERB-FR8, followed by 10 symbols of C-SEGUE-FR4, after which the C-SHOWTIME is resumed with restart of the superframe counter.

The ATU-R sends the final sequence consisting of 518 symbols of R-REVERB-FR7, which is followed by ten symbols of R-SEGUE-FR5. After this the R-SHOWTIME is resumed with restart of the superframe counter.

IPR2025-00395
Petitioners' Exhibit 1012
Page 103 of 179

The PSD level used in SHOWTIME shall be the level communicated in R-MSG-FR1, even if the PSD level during which the profile was established is different.

12.4 Fast Retrain Procedure – Unknown Profile Transition

If an "Unknown Profile" indicator is exchanged in R-MSG-FR2 and/or C-MSG-FR2, the Fast Retrain procedure is executed up to (and including) C-SEGUE-FR4/R-SEGUE-FR5.

Upon receiving an "Unknown Profile" bit the ATU-R shall invoke the Initialization Reset Procedure instead of resuming SHOWTIME. Upon receiving an "Unknown Profile" bit the ATU-C shall invoke the Initialization Reset Procedure.

12.5 Fast Retrain Procedure – Initiated from L3 or Recommendation G.994.1

A Fast Retrain Procedure initiated from an idle link state or via an Escape from Handshake, shall be according to 13.4.5 or 11.5, except for a longer time duration for R-TO1 of the R-RECOV signal. This will allow for re-acquisition of loop timing at the ATU-R (see Figures 33 and 34).

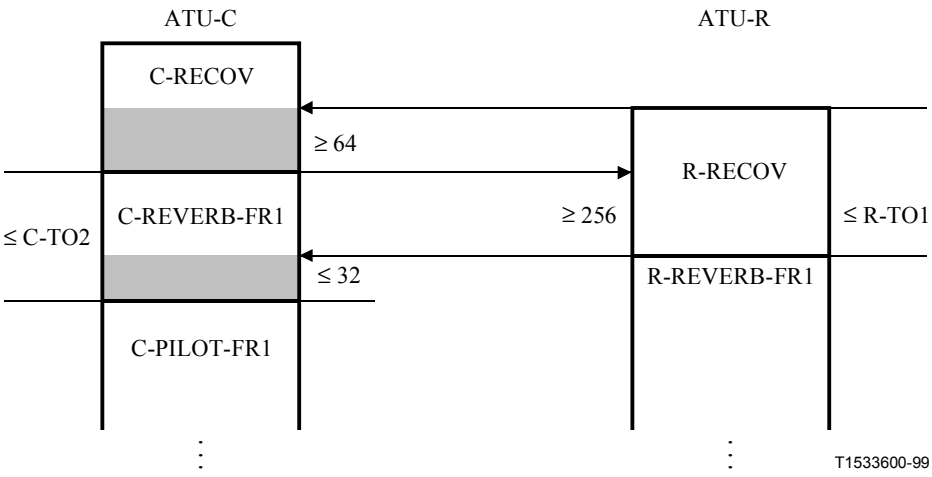

Figure 33/G.992.2 – Timing diagram of the Fast Retrain Procedure, ATU-C initiated from L3

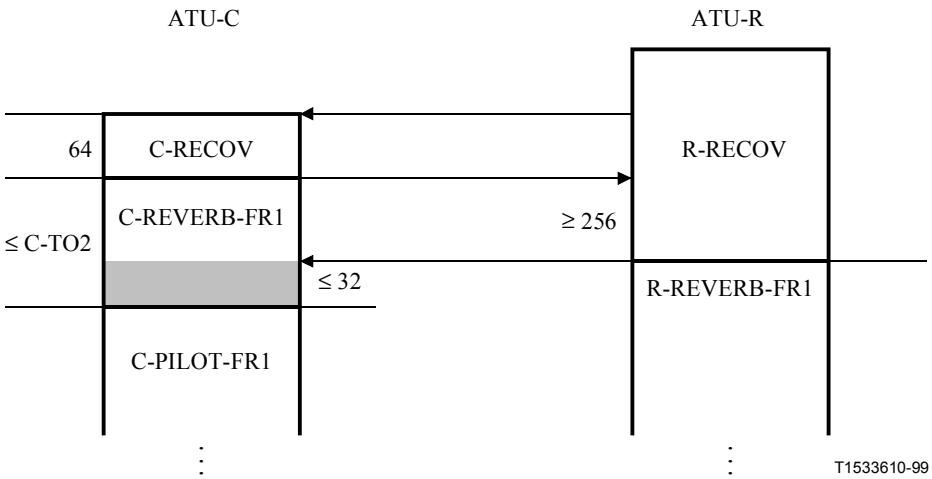

Figure 34/G.992.2 – Timing diagram of the Fast Retrain Procedure, ATU-R initiated from L3

IPR2025-00395
Petitioners' Exhibit 1012
Page 104 of 179

12.6 Abort of Fast Retrain

12.6.1 Abort of an ATU-C initiated Fast Retrain Request

If, during the transmission of C-RECOV of an ATU-C initiated Fast Retrain Request, a R-TONES-REQ signal is detected by the ATU-C, the ATU-C shall abort the C-RECOV signal and repond with an Initialization Reset Procedure starting with C-TONES (i.e. HSTU-R initiated duplex startup procedure as defined in Recommendation G.994.1).

12.6.2 Abort of an ATU-R initiated Fast Retrain Request

If, during the transmission of R-RECOV of an ATU-R initiated Fast Retrain Request, a C-TONES signal is detected by the ATU-R, the ATU-R shall abort the R-RECOV signal and respond with an Initialization Reset Procedure starting with R-TONES-REQ (i.e. HSTU-C initiated duplex startup procedure as defined in Recommendation G.994.1).

12.7 Fast Retrain Truncate

If an ATU-R has no valid profiles, it may truncate the Fast Retrain Procedure prematurely after R-CRC-FR1, by setting the Fast Retrain Truncate bit in R-MSG-FR1.

If an ATU-C has no valid profiles, it may truncate the Fast Retrain Procedure prematurely after C-CRC-FR1, by setting the Fast Retrain Truncate bit in C-MSG-FR1.

If the Fast Retrain Truncate bit is set to 1_b in R-MSG-FR1 or C-MSG-FR1, the Fast Retrain Procedure is executed up to (and including) C-CRC-FR1 and R-QUIET-FR1.

Instead of continuing with the Fast Retrain Procedure, the ATU-R or ATU-C shall invoke the Initialization Reset Procedure.

12.8 Fast Retrain Reset Procedure

If errors or malfunctions are detected or time-out limits are exceeded at various points in the Fast Retrain sequence, either an Initialization Reset Procedure or a Fast Retrain Reset Procedure shall be executed. An ATU executes a Fast Retrain Reset Procedure by transitioning to the Fast Retrain Request. An ATU-R invoking the Fast Retrain Reset Procedure shall transition to R-RECOV. An ATU-C invoking the Fast Retrain Reset Procedure shall transition to C-RECOV.

13 Power management

13.1 Introduction

Power management defines a set of power management states for the ADSL link and the use of the eoc channel to coordinate power management between the ATUs. Power reduction can be achieved by minimizing the energy transmitted by the ATU onto the U-C and U-R reference points as well as by reducing the power consumed by the ATU (e.g. reducing clock speed, turning off drivers). This subclause defines a set of stable ADSL link states between the ATU-R and ATU-C by specifying the signals that are active on the link in each state. In addition, link transition events and procedures are defined in the subclause. The details of the ATU coordination with system power management functions are outside the scope of this Recommendation.

IPR2025-00395
Petitioners' Exhibit 1012
Page 105 of 179

13.2 ADSL link states

ADSL link states are defined to allow an ATU to enter a low power state without totally disconnecting the link. These states are stable states and are generally not expected to be transitory. An ATU must support the ADSL link states shown as mandatory in Table 45.

Table 45/G.992.2 – G.992.2 Power management states

State	Name	Support	Description
L0	Full On	Mandatory	The ADSL link is fully functional.
L1	Low Power	Optional	The L1 state maintains full L0 state functionality at a lower net data rate (except for power management transitions). Power reduction in L1 can be achieved by methods provided in the exchange entry procedure (e.g. reduced data rata, reduced number of tones, and reduced power per tone). The reductions are implementation specific.
L2			Reserved for use by ITU-T.
L3	Idle	Mandatory	There is no signal transmitted at the U-C and U-R reference points. The ATU may be powered or unpowered in L3.

States L2 and L4 to L127 are reserved for use by ITU-T. States L128 to L255 are reserved for vendor-specific implementation.

13.3 Link state transitions

Link state transitions are initiated by various events. Events may arise from functions specified in this Recommendation (e.g. loss of power) or from functions outside the Recommendation's scope (e.g. changes in the line conditions that cause need for fast retrain or higher level requests to change power management states).

The following events are identified as potentially leading to link transitions:

- Grant – This is a negotiated event and results from the successful eoc handshake result (see 13.5). The reason for initiating the eoc handshake (e.g. the request to enter into a lower power state) is outside the scope of the Recommendation. An unsuccessful eoc handshake does not result in a grant event.
- Command – This event results from an unconditional request to change states. The reason for requesting to change state (e.g. the request to move from idle to full on state) is outside the scope of the Recommendation.
- Change in line condition – This event results when the receiver detects that conditions have changed sufficiently to merit an initialization or fast retrain procedure. The method that the receiver uses to determine this (e.g. loss of suitable equalization, decrease of margin) is outside the scope of the Recommendation.
- Failure – This event is one of the defined failures in clause 10 (e.g. "loss of power" failure).

IPR2025-00395
Petitioners' Exhibit 1012
Page 106 of 179

The allowed state transitions are listed in Table 46, and each is assigned a label string. The labelled power management transitions are shown in Figure 35.

Table 46/G.992.2 – G.992.2 Power management transitions

Label	Starting State	Resulting State	Event	Procedure
T0a	L0	L0	Change in line conditions require initialization at ATU-R or ATU-C.	Upon detection of initialization signals by ATU-R or ATU-C, the initialization procedure proceeds.
T0b	L0	L0	Change in line conditions require fast retrain at ATU-R or ATU-C.	Upon detection of fast retrain signals by ATU-R or ATU-C, the fast retrain procedure proceeds.
T0c	L0	L0	ATU-C or ATU-R is commanded to change link via the initialization procedure.	Same as procedure for T0a.
T0d	L0	L1	Grant event	Following successful eoc handshake initiated by the ATU-C or ATU-R, the exchange entry procedure is used.
T0e	L0	L3	Grant event	Following successful eoc handshake initiated by the ATU-C or ATU-R, the ATUs enter L3.
T0f	L0	L3	ATU-R detects "loss of power" failure.	Following detection of "loss of power" failure by the ATU-R, the ATU-R sends the corresponding indicator per clauses 8 and 10 and enter L3. The ATU-C enters L3 upon detection of the loss of power indication.
T1a	L1	L0	Change in line conditions require initialization at ATU-R or ATU-C.	Same as procedure for T0a.
T1b	L1	L0	Change in line conditions require fast retrain at ATU-R or ATU-C.	Same as procedure for T0b.
T1c	L1	L0	ATU-C or ATU-R is commanded to change link via the initialization procedure.	Same as procedure for T0a.
T1d	L1	L0	Grant event	Following successful eoc handshake initiated by the ATU-C or ATU-R, the fast retrain procedure is initiated by the ATU-R.
T1e	L1	L3	Grant event	Same as procedure for T0e.
T1f	L1	L3	ATU-R detects "loss of power" failure.	Same as procedure for T0f.
T3a	L3	L0	ATU-C or ATU-R is commanded to move to L0 via initialization.	Same as procedure for T0a.
T3b	L3	L0	ATU-C or ATU-R is commanded to move to L0 via fast retrain.	Upon detection of fast retrain signals by ATU-R or ATU-C, the fast retrain procedure proceeds as in 12.5.

IPR2025-00395
Petitioners' Exhibit 1012
Page 107 of 179

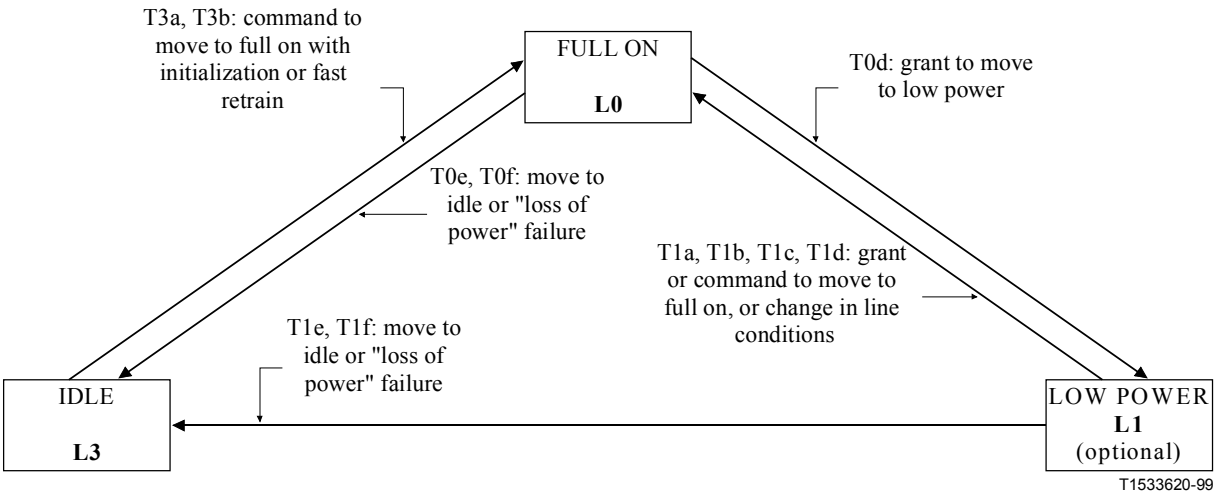

Figure 35/G.992.2 – Power management states

The ATU-R and ATU-C coordinate transitions between power states using the procedures defined in 13.4 (e.g. eoc handshake, exchange entry procedure, fast retrain).

13.4 Link transition procedures

The transitions in this subclause shall be used when the corresponding power management events occur. Following completion of each of these procedures, the ATU-R shall update the Link State data register if the register does not conform to the current ADSL link state.

13.4.1 Transitions from L0 to L0 (T0a, T0b, T0c)

The transitions T0a, T0b and T0c transitions are not strictly part of power management, but they have been included in this subclause for completeness and to discuss potential transitions to ADSL link state L3.

Transitions labelled T0a and T0c involve execution of the initialization procedure in clause 11. Successful execution of the initialization procedure will result in the ATU SHOWTIME state and power management state L0. However, if the initialization procedure cannot be successfully completed for some reason (e.g. there is no response to the initialization signals, repeated error conditions), a transition to power management state L3 may be initiated based upon vendor-discretionary methods.

The transition labelled T0b involves execution of the Fast Retrain Procedure. Successful execution results in the ATU SHOWTIME state and power management state L0. Additionally, the Fast Retrain Procedure may invoke the initialization procedure. If the initialization procedure cannot be completed for some reason, a transition to power management state L3 may be initiated based upon vendor-discretionary method.

13.4.2 Transition from L0 to L1 (T0d)

The ATU-C or ATU-R may initiate the transition from L0 to L1 by using the eoc handshake (see 13.5).

Upon successful termination of the eoc handshake (indicated by the grant event), the Exchange entry procedure shall be used to adjust the parameters provided in the Exchange portion of the initialization procedure (e.g. data rate, number of tones, and power per tone).

IPR2025-00395
Petitioners' Exhibit 1012
Page 108 of 179

13.4.2.1 Exchange entry procedure

This subclause defines the Exchange entry procedure. This procedure reuses states, signals, and rules for determining the next state contained within clause 11 as defined in the following steps:

1) After successful termination of the eoc handshake procedure, the ATU-R shall transmit R-QUIET-PM. R-QUIET-PM is defined as no transmitted signal onto the U-R interface. The ATU-R shall maintain loop timing and symbol timing during the R-QUIET-PM signal.
2) The ATU-C shall detect R-QUIET-PM, and respond by sending C-REVERB4 within N1 symbols on a symbol boundary. C-REVERB4 is defined in 11.11.1.
3) The ATU-R shall detect C-REVERB4 and respond by sending R-REVERB4 within TBD symbols (TBD to be sufficiently small so that loss of signal defect does not occur – Working value is 40). R-REVERB4 is defined in 11.10.9. The exchange portion of the initialization procedure defined in 11.11 and 11.12 shall continue from this point (i.e. the ATU-R shall send R-SEQUE3 after 128 symbols of R-REVERB4). During R-MSG-RA, the ATU-R shall use the "no options selected" message.

N1 is an implementation-specific number of symbols and shall be sufficiently small so that loss of signal defect does not occur at the ATU-C. Otherwise, the ATU-C implementation shall include a means that blocks the loss of signal defect during exchange entry procedure.

13.4.3 Transitions from L1 to L0 (T1a, T1b, T1c, T1d)

The ATU-C or ATU-R may initiate the transition labelled T1d from L1 to L0 by using the eoc handshake.

Upon successful termination of the eoc handshake (indicated by the grant event) the ATU-R shall begin the fast retrain procedure defined in clause 12 (i.e. start to transmit the R-RECOV signal).

In addition, either ATU may start the initialization procedure or Fast Retrain Procedure to move to L0 using transitions labelled T1a, T1b, and T1c. The reasons for generating the command events corresponding to these transitions are outside the scope of the Recommendation. Upon successful termination of the procedures, the ADSL link state is L0. However, if the initialization or Fast Retrain Procedures cannot be successfully completed for some reason (e.g. repeated error conditions), a transition to power management state L3 may be initiated based upon vendor discretionary methods.

13.4.4 Transitions from L0 or L1 to L3 (T0e, T0f, T1e, T1f)

13.4.4.1 Orderly shutdown procedure

The ATU-C or ATU-R may initiate the transitions to L3 labelled T0e and T1e by using the eoc handshake. These transitions should be used for orderly power-down procedure.

Upon successful termination of the eoc handshake (indicated by the grant event), the ATU-R shall stop transmitting. Upon detecting this, the ATU-C shall also stop transmitting.

13.4.4.2 Disorderly shutdown procedure

The ATU-R may initiate the transitions to L3 labelled T0f and T1f. These transitions should only be used if power is unexpectedly removed from the ATU-R.

Upon detection of the "loss of power" failure by the ATU-R, it shall send the dying gasp eoc command (see 8.3.3). Upon detection of the loss of signal indication, the ATU-C shall stop transmitting and enter L3.

IPR2025-00395
Petitioners' Exhibit 1012
Page 109 of 179

13.4.5 Transitions from L3 to L0 (T3a, T3b)

Either ATU may start the initialization procedure to move to L0 using transitions labelled T3a. Alternately, the ATUs may initiate a fast retrain procedure as in the transition labelled T3b. The reasons for generating the command events corresponding to these transitions are outside the scope of the Recommendation.

For transition T3b, the ATUs shall use the fast retrain procedure with provision to recover timing when starting from the idle conditions, including the possibility to terminate the procedure as described in clause 12 for some reason (e.g. profiles were not maintained during off power condition in L3).

Upon successful termination of the procedures, the ADSL link state is L0. However, if the initialization or fast retrain procedures cannot be successfully completed for some reason (e.g. no response to training signals), the power management state is unchanged.

13.5 eoc Handshake

The eoc Handshake is used for power management coordination between the ATUs.

The eoc Handshake ends in either a successful or unsuccessful result. The successful result in defined as a grant event used to enable a power management state transition. The unsuccessful result does not trigger a state transition and the power management state is unchanged.

The handshake procedure includes a sequence of eoc commands defined in clause 8. If any of the eoc command, read, or write protocols used in the eoc handshake detects an eoc protocol error condition, the eoc handshake terminates in the unsuccessful result.

13.5.1 ATU-R initiated eoc Handshake

The ATU-R initiates the handshake using the following procedure.

1) The ATU-R shall write the value of the requested ADSL link state into the Link State data register.
2) The ATU-R sends a REQPDN eoc autonomous message.
3) After receiving a REQPDN message from the ATU-R, the ATU-C shall respond by reading the requested power down state from the Link State data register using the eoc read protocol.
4) After receiving the REQPDN message, the ATU-C may optionally propose an alternate ADSL link state by writing a different value into Link State data register using the eoc write protocol.
5) After determining that it can grant the state transition request, the ATU-C shall issue the GNTPDN eoc command using the eoc command protocol. If the eoc command protocol completes by receiving the echo of the command, the handshake ends with a successful result. If the eoc command protocol completes by receiving the UTC message, the handshake ends with an unsuccessful result.

If no response to the REQPDN eoc autonomous message is received from the ATU-C within 5 s, then the ATU-R shall resend the REQPDN message. If the ATU-R is in the middle of a multibyte read or write eoc protocol sequence, then the time-out count shall not begin until the end of the multi-byte sequence. Upon time-out, the ATU-R may send the REQPDN message up to four more times, after which the handshake procedure terminates with an unsuccessful result.

If the ATU-C is in the middle of a multi-byte read or write sequence when a REQPDN message is received, then the ATU-C may choose to terminate the multi-byte sequence or delay response until the end of the sequence.

IPR2025-00395
Petitioners' Exhibit 1012
Page 110 of 179

If the ATU-C cannot grant the power down request for some reason (e.g. it does not support the requested state), it shall send the REJPDN eoc command using the eoc command protocol. After the ATU-R receives the REJPDN eoc command, the handshake ends with an unsuccessful result.

If the ATU-R cannot support the granted link state for some reason (e.g. the ATU-C responds via the optional write with a different ADSL link state, or the ATU-R no longer needs to go into the granted power down state), it shall respond to GNTPDN command with the UTC eoc message using the eoc command protocol.

13.5.2 ATU-C initiated eoc Handshake

The ATU-C initiates the eoc Handshake using the following procedure:

1) The ATU-C writes the value of the new ADSL link state into Link State data register using the eoc write protocol.
2) The ATU-C shall end the handshake sequence by issuing the GNTPDN eoc command using the eoc command protocol. If the eoc command protocol completes by receiving the echo of the command, the handshake ends with a successful result. If the eoc command protocol completes by receiving the UTC message, the handshake ends with an unsuccessful result.

If the ATU-R cannot support the granted link state for some reason (e.g. the ATU-R does not support the ADSL link state), then it shall respond to GNTPDN command with the UTC eoc message using the eoc command protocol.

ANNEX A

Non-overlapped spectrum operation

A.1 ATU-R transmitter PSD mask

Figure A.1 shows the Power Spectral Density (PSD) mask for an ATU-R transmitter operating in non-overlapped spectrum mode. The low frequency stop band is defined as the voice band. The high frequency stop band is defined as frequencies greater than 138 kHz. The slopes shown are approximate; refer to the equations for the exact slopes.

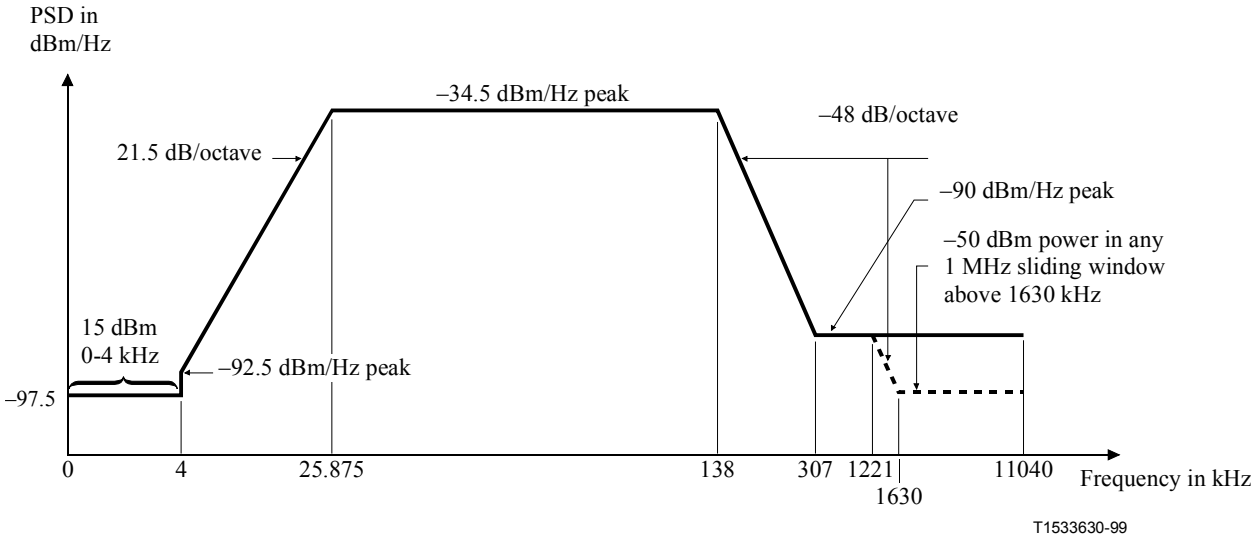

Figure A.1/G.992.2 – ATU-R transmitter PSD mask

IPR2025-00395
Petitioners' Exhibit 1012
Page 111 of 179

Frequency band (kHz)	Equation for line (dBm/Hertz)	Impedance (Ohm)	Resolution bandwidth (kHz)
0-4	−97.5	100	
	with +15 dBrn power in 0-4 kHz window	600	4
> 4-25.875	$-92.5 + 21.5 \times \log(f/4)/\log(2)$	100	
25.875-138	−34.5	100	10
138-307	$-34.5 - 48 \times \log(f/138)/\log(2)$	100	10
307-1221	−90	100	10
1221-1630	< −90 peak	100	10
	with max power in the [f, f + 1 MHz] window of $(-90 - 48 \times \log(f/1221)/\log(2) + 60)$ dBm	100	1000
1630-11 040	< −90 peak	100	10
	with max power in the [f, f + 1 MHz] window of −50 dBm	100	1000

A.1.1 Passband PSD ripple and group delay

The average PSD within the used passband shall be no greater than −38 dBm/Hz reduced by power cutback in steps of 2 dB. The lower end of the passband is implementation dependent. The upper end of the passband depends on whether the signal is for initialization (see A.1.2.1) or steady state (see A.1.2.3).

The passband ripple shall be no greater than +3.5 dB above the specified reference level; the maximum PSD (−38 − Absolute Upstream Fast Retrain Power Cutback +3.5) dBm/Hz applies across the whole band from 25.875 kHz to 138 kHz.

The group delay variation over the pass band shall not exceed 50 µs.

A.1.2 Transmit power spectral density and aggregate power level

The power emitted by the ATU-R is limited by the specifications in this subclause. In addition, the ATU-R transmitter shall comply with national requirements on emission of electromagnetic energy.

A.1.2.1 All initialization signals (except R-ECT) starting with R-REVERB1

The nominal PSD in the band from 25.875 to 138 kHz shall be set at −38 dBm/Hz for a nominal transmit power not greater than 12.5 dBm. The reference PSD in the band from 25.875 to 138 kHz shall be (−38 − Absolute Upstream Fast Retrain Power Cutback) dBm/Hz for a reference aggregate transmit power of not greater than (12.5 − Absolute Upstream Fast Retrain Power Cutback) dBm.

During the R-REVERB and R-SEGUE signals, all subcarriers from index i to 31 shall be transmitted, with i vendor discretionary. However, at the vendor's discretion, one or more of these subcarriers may not be transmitted during the R-MEDLEY signal.

To allow for non-ideal transmit filter effects (e.g. passband ripple and transition band rolloff), the maximum transmit PSD shall be no more than 1 dB above the reference PSD level. The maximum transmit PSD shall therefore be no higher than (−37 − Absolute Upstream Fast Retrain Power Cutback) dBm/Hz.

A.1.2.2 R-ECT

Because R-ECT is a vendor-defined signal, the PSD specification shall be interpreted only as a maximum. This maximum level is (−3 −37 − Absolute Upstream Fast Retrain Power

IPR2025-00395
Petitioners' Exhibit 1012
Page 112 of 179

Cutback) dBm/Hz for the band from 25.875 to 138 kHz. Subcarriers 1 to 5 may be used, but the power in these carriers shall conform to the specification give in A.1.

A.1.2.3 Steady State data signal

The nominal PSD in the band from 25.875 to 138 kHz shall be set at −38 dBm/Hz. The nominal aggregate power shall be set at −1.65 + 10log(ncup), where ncup is the number of subcarriers used (i.e. with $b_i > 0$) (12.5 dBm if all subcarriers are used). The reference PSD in the band from 25.875 to 138 kHz shall be (−38 − Absolute Upstream Fast Retrain Power Cutback) dBm/Hz. The reference aggregate power shall be set at (−1.65 −Absolute Upstream Fast Retrain Power Cutback + 10log(ncup), where ncup is the number of subcarriers used (12.5 − Absolute Upstream Fast Retrain Power Cutback dBm if all subcarriers are used). The transmit PSD and aggregate power may, however, be changed from their reference values in either of the following circumstances:

- The bits and gains table received from the ATU-C during initialization and possibly updated through bit swaps, may not allocate bits to some subcarriers and may finely adjust (i.e. within a −14.5 to + 2.5 dB range) the transmit PSD level of others in order to equalize expected error rates on each of those subcarriers.
- Vendor discretionary transmit PSD levels for unused subcarriers (i.e. with $b_i = 0$). The maximum transmit PSD for these subcarriers is specified in b) and c) below.

To allow for non-ideal transmit filter effects (e.g. passband ripple and transition band rolloff), the maximum transmit PSD shall be no more than 1 dB above the finely adjusted reference PSD level. The maximum transmit PSD shall therefore be no higher than (−34.5 − Absolute Upstream Fast Retrain Power Cutback) dBm/Hz.

The transmit PSD of each subcarrier is defined as follows:

a) For the subcarriers with ($b_i > 0$), the ATU-R transmitter shall transmit at PSD levels equal to that specified by the g_i (e.g. $g_i = 1$, then transmit at R-MEDLEY transmit PSD level). The aggregate transmit power in these subcarriers shall not exceed −1.65 + 10log($ncup_1$) dBm by more than 0.7 dB, where $ncup_1$ is the number of these subcarriers (i.e. with $b_i > 0$).

b) For the subcarriers with ($b_i = 0$ and $g_i > 0$), the ATU-R transmitter should and is recommended to transmit at PSD levels equal to that specified by the g_i (e.g. $g_i = 1$, then transmit at R-MEDLEY level), with a 4-QAM constellation point (which may change from symbol to symbol). The ATU-R receiver cannot assume any particular PSD levels on those subcarriers. The transmit PSD levels of those subcarriers shall be no higher than the C-REVERB1 transmit PSD level + 10log(g_i^2) dB. The aggregate transmit power in these subcarriers shall not exceed −1.65 + 10log($ncup_2$) dBm, where $ncup_2$ is the number of these subcarriers (i.e. with $b_i = 0$ and $g_i > 0$).

c) For the subcarriers with ($b_i = 0$ and $g_i = 0$), the ATU-R transmitter should and is recommended to transmit no power on those subcarriers. The ATU-C receiver cannot assume any particular PSD level on those subcarriers. The transmit PSD levels of those subcarriers with $g_i = 0$ shall be at least 10 dB below the sync symbol reference transmit PSD level if the subcarrier is below the lowest used subcarrier (lowest i with $b_i > 0$) and shall be below the sync symbol reference transmit PSD level if the subcarrier is above the lowest used subcarrier.

The aggregate transmit power over the 25.875 to 138 kHz band shall be no higher than 12.5 dBm, which is equivalent to an average transmit PSD of no higher than −38 dBm/Hz.

IPR2025-00395
Petitioners' Exhibit 1012
Page 113 of 179

NOTE – It is recommended that the g_i values for subcarriers with $g_i > 0$ are contrained within ±2.5 dB with respect to g_sync, during initialization and subsequent bitswaps to avoid cyclostationary interference from the synchronization symbol.

A.1.2.4 Synchronization symbol

At Initialization, the sync symbol reference transmit PSD level shall be set at −38 − Absolute Upstream Fast Retrain Power Cutback + 10log(g_{sync}^2) dBm/Hz, with g_{sync}^2 defined as the average g_i^2 value over the used (i.e. $b_i > 0$) subcarriers. The sync symbol reference transmit PSD shall not be updated with user subcarrier gain changes during SHOWTIME.

The transmit PSD level for those subcarriers with $g_i > 0$ shall be the sync symbol reference transmit PSD level. The transmit PSD levels of those subcarriers with $g_i = 0$ shall be at least 10 dB below the sync symbol reference transmit PSD level if the subcarrier is below the lowest used subcarrier (lowest i with $b_i > 0$) and shall be below the sync symbol reference transmit PSD level if the subcarrier is above the lowest used subcarrier.

Since the g_i are applied only to the data symbols, the transmit PSD of a synchronization symbol differs from the transmit PSD of a data symbol. These g_i are calculated for the multipoint constellations in order to equalize the expected error rate on all subcarriers, and are therefore irrelevant for most of the 4-QAM modulated subcarriers of the synchronization symbol.

A.2 ATU-C transmitter PSD mask

Figure A.2 shows the Power Spectral Density (PSD) mask for an ATU-C transmitter operating in non-overlapped spectrum mode. The low frequency stop band is defined as frequencies below 138 kHz. The high frequency stop band is defined as frequencies greater than 552 kHz. The slopes shown are approximate; refer to the equations for the exact slopes.

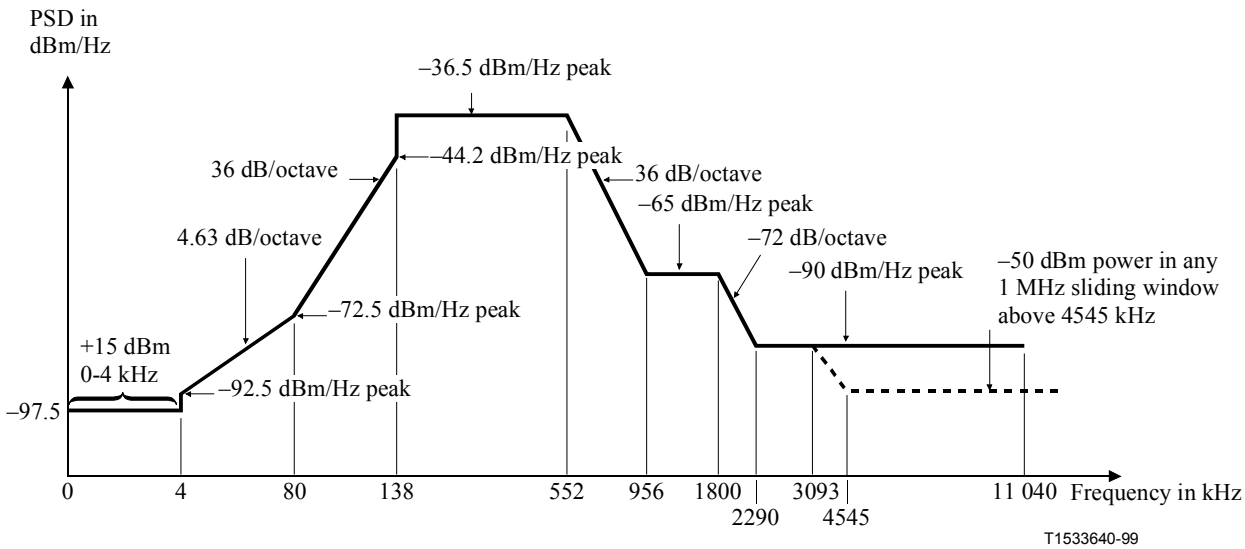

Figure A.2/G.992.2 – ATU-C transmitter PSD mask

IPR2025-00395
Petitioners' Exhibit 1012
Page 114 of 179

Frequency band (kHz)	Equation for line (dBm/Hz)	Impedance (Ohm)	Resolution Bandwidth (kHz)
0-4	–97.5	100	
	with +15 dBrn power in 0-4 kHz window	900	4
4-80	$-92.5 + 4.63 \times \log(f/4)/\log(2)$	100	
80-138	$-72.5 + 36 \times \log(f/80)/\log(2)$	100	10
138-552	–36.5	100	10
552-956	$-36.5 - 36 \times \log(f/552)/\log(2)$	100	10
956-1800	–65	100	10
1800-2290	$-65 - 72 \times \log(f/1800)/\log(2)$	100	10
2290-3093	–90	100	10
3093-4545	< –90 peak	100	10
	with max power in the [f, f + 1 MHz] window of $(-36.5 - 36 \times \log(f/1104)/\log(2) + 60)$ dBm	100	1000
4545-11 040	< 90 peak	100	10
	with max power in the [f, f + 1 MHz] window of –50 dBm	100	1000

A.2.1 Passband PSD ripple and group delay

The average PSD within the used passband shall be no greater than –36.5 dBm/Hz reduced by power cutback in steps of 2 dB. The lower end of the passband is implementation dependent. The upper end depends on whether the signal is for initialization (see A.2.2.1) or steady state (see A.2.2.3).

The passband ripple shall be no greater than +3.5 dB above the specified nominal level; the maximum PSD of $(-40 - 2n + 3.5)$ dBm/Hz applies across the whole band from 25 kHz to 552 kHz, where $2n$ is defined in 11.7.5.

The group delay variation over the passband shall not exceed 50 µs.

A.2.2 Transmit power spectral density and aggregate power level

The power emitted by the ATU-C is limited by the specifications in this subclause. In addition, the ATU-C transmitter shall comply with national requirements on emission of electromagnetic energy.

A.2.2.1 All initialization signals (except C-ECT) starting with C-REVERB1

The nominal PSD in the band from 138 to 552 kHz shall be set at –40 dBm/Hz for a nominal transmit power in the band not greater than 16.2 dBm. In the other frequency bands the nominal PSD shall not exceed the mask represented in Figure A.2. The reference PSD in the band from 138 to 552 kHz shall be set at $(-40 - 2n)$ dBm/Hz for reference transmit power in that band not greater than $16.2 - 2n$ dBm, with $2n$ as defined in 11.7.5. In the other frequency bands the reference PSD shall not exceed the mask represented in Figure A.2 reduced by $2n$.

During the C-REVERB and C-SEGUE signals, all subcarriers from index i to 127 shall be transmitted, with vendor discretionary. However, at the vendor's discretion, one or more of these subcarriers may not be transmitted during the C-MEDLEY signal.

To allow for non-ideal transmit filter effects (e.g. passband ripple and transition band rolloff), the maximum transmit PSD shall be no more than 1 dB above the nominal PSD level. The maximum transmit PSD shall therefore be no higher than $-39 - 2n$ dBm/Hz.

IPR2025-00395
Petitioners' Exhibit 1012
Page 115 of 179

A.2.2.2 C-ECT

Because C-ECT is a vendor-defined signal, the PSD specification shall be interpreted only as a maximum. This maximum level is –39 – 2*n* dBm/Hz for the band from 138 to 552 kHz. Subcarriers 1 to 31 may be used, but the power in these carriers shall conform to the specification given in A.2.

A.2.2.3 Steady-state data signal

The nominal PSD in the band from 138 to 552 kHz shall be set at –40 dBm/Hz. The nominal aggregate power shall be set at $-3.65 + 10\log(nc_{down})$, where nc_{down} is the number of subcarriers used (i.e. with $b_i > 0$) (16.2 dBm if all subcarriers are used). The reference PSD in the band from 138 to 552 kHz shall be set at (–40 – 2*n*) dBm/Hz, where 2*n* is defined in 11.7.5. The transmit PSD and aggregate power may, however, be changed from their reference values in either of the following circumstances:

- The bits and gains table (received from the ATU-R during initialization and possibly updated through bit swaps, may not allocate bits to some subcarriers and may finely adjust (i.e. within a –14.5 to +2.5 dB range) the transmit PSD level of others in order to equalize expected error rates on each of those subcarriers.
- Vendor-discretionary transmit PSD levels for unused subcarriers (i.e. with $b_i = 0$). The maximum transmit PSD for these subcarriers is specified in b) and c) below.

To allow for non-ideal transmit filter effects (e.g. passband ripple and transition band rolloff), the maximum transmit PSD shall be no more than 1 dB above the finely adjusted reference PSD level. The maximum transmit PSD shall therefore be no higher than –36.5 – 2*n* dBm/Hz.

The transmit PSD of each subcarrier is defined as follows:

a) For the subcarriers with ($b_i > 0$), the ATU-C transmitter shall transmit at PSD levels equal to that specified by the g_i (e.g. $g_i = 1$, then transmit at C-MEDLEY transmit PSD level). The aggregate transmit power in these subcarriers shall not exceed $-3.65 + 10\log(nc_{down1}) - 2n$ dBm by more than 0.7 dB, where nc_{down1} is the number of these subcarriers (i.e. with $b_i > 0$).

b) For the subcarriers with ($b_i = 0$ and $g_i > 0$), the ATU-C transmitter should and is recommended to transmit at PSD levels equal to that specified by the g_i (e.g. $g_i = 1$, then transmit at C-MEDLEY level), with a 4-QAM constellation point (which may change from symbol to symbol). The ATU-R receiver cannot assume any particular PSD levels on those subcarriers. The transmit PSD levels of those subcarriers shall be no higher than the C-REVERB1 transmit PSD level + $10\log(g_i^2)$ dB. The aggregate transmit power in these subcarriers shall not exceed $-3.65 + 10\log(nc_{down2}) - 2n$ dBm, where nc_{down2} is the number of these subcarriers (i.e. with $b_i = 0$ and $g_i > 0$).

c) For the subcarriers with ($b_i = 0$ and $g_i = 0$), the ATU-C transmitter should and is recommended to transmit no power on those subcarriers. The ATU-R receiver cannot assume any particular PSD level on those subcarriers. The transmit PSD levels of those subcarriers with $g_i = 0$ shall be at least 10 dB below the sync symbol reference transmit PSD level if the subcarrier is below the lowest used subcarrier (lowest *i* with $b_i > 0$) and shall be below the sync symbol reference transmit PSD level if the subcarrier is above the lowest used subcarrier.

The aggregate transmit power over the 138 to 552 kHz band shall be no higher than 16.2 – 2*n* dBm, which is equivalent to an average transmit PSD of no higher than –40 – 2*n* dBm/Hz (with *n* indicating power cutback, *n* = 0 to 6).

IPR2025-00395
Petitioners' Exhibit 1012
Page 116 of 179

NOTE – It is recommended that the g_i values for subcarriers with $g_i > 0$ are contrained within ±2.5 dB with respect to g_sync, during initialization and subsequent bitswaps to avoid cyclostationary interference from the synchronization symbol.

A.2.2.4 Synchronization symbol

At Initialization, the sync symbol reference transmit PSD level shall be set at $-40 - 2n + 10\log(g_{sync}^2)$ dBm/Hz, with g_{sync}^2 defined as the average g_i^2 value over the used (i.e. $b_i > 0$) subcarriers. The sync symbol reference transmit PSD shall not be updated with used subcarrier gain changes during SHOWTIME.

The transmit PSD level for those subcarriers with $g_i > 0$ shall be sync symbol reference transmit PSD level. The transmit PSD levels of those subcarriers with $g_i = 0$ shall be at least 10 dB below the sync symbol reference transmit PSD level if the subcarrier is below the lowest used subcarrier (lowest i with $b_i > 0$) and shall be below the sync symbol reference transmit PSD level if the sub carrier is above the lowest used subcarrier.

Since the g_i are applied only to the data symbols, the transmit PSD of a synchronization symbol differs from the transmit PSD of a data symbol. These g_i are calculated for the multipoint constellations in order to equalize the expected error rate on all subcarriers, and are therefore irrelevant for most of the 4-QAM modulated subcarriers of the synchronization symbol.

ANNEX B

Overlapped spectrum operation

B.1 ATU-R transmitter PSD mask

Figure B.1 shows the Power Spectral Density (PSD) mask for an ATU-R transmitter operating in overlapped spectrum mode. The low frequency stop band is defined as the voice band. The high frequency stop band is defined as frequencies greater than 138 kHz. The slopes shown are approximate; refer to the equations for the exact slopes.

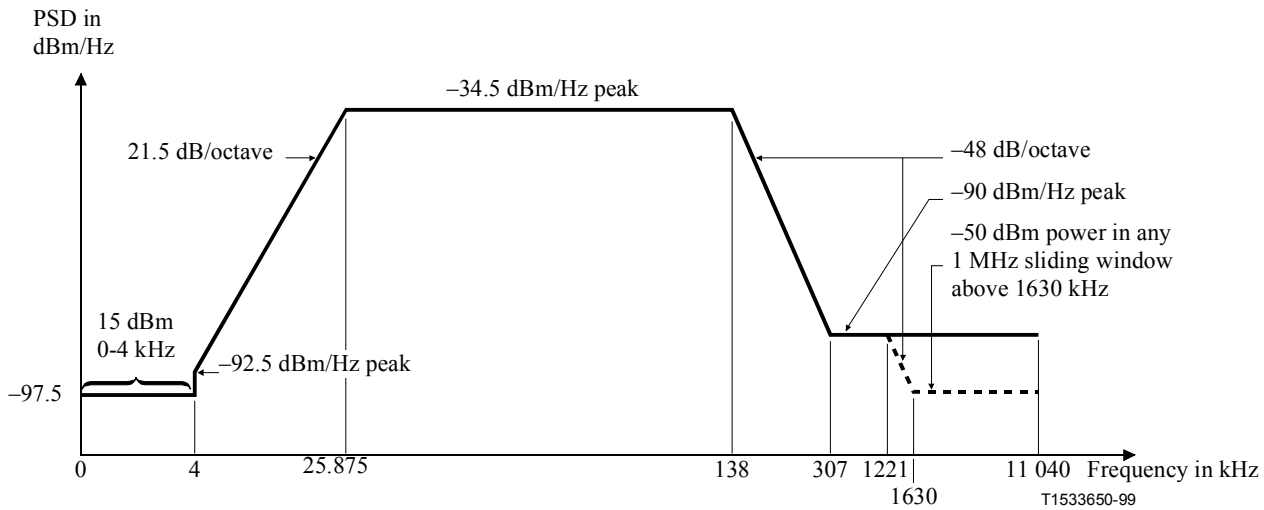

Figure B.1/G.992.2 – ATU-R transmitter PSD mask

IPR2025-00395
Petitioners' Exhibit 1012
Page 117 of 179

Frequency band (kHz)	Equation for line (dBm/Hertz)	Impedance (Ohm)	Resolution bandwidth (kHz)
0-4	–97.5	100	
	with +15 dBrn power in 0-4 kHz window	600	4
>4-25.875	$-92.5 + 21.5 \times \log(f/4)/\log(2)$	100	
25.875-138	–34.5	100	10
138-307	$-34.5 - 48 \times \log(f/138)/\log(2)$	100	10
307-1221	–90	100	10
1221-1630	< –90 peak	100	10
	with max power in the [f, f + 1 MHz] window of $(-90 - 48 \times \log(f/1221)/\log(2) + 60)$ dBm	100	1000
1630-11 040	< –90 peak	100	10
	with max power in the [f, f + 1 MHz] window of –50 dBm	100	1000

B.1.1 Passband PSD ripple and group delay

The average PSD within the used passband shall be no greater than –38 dBm/Hz reduced by power cutback in steps of 2 dB. The lower end of the passband is implementation dependent. The upper end of the passband depends on whether the signal is for initialization (see B.1.2.1) or steady state (see B.1.2.3).

The passband ripple shall be no greater than +3.5 dB above the specified reference level; the maximum PSD (–38 – Absolute Upstream Fast Retrain Power Cutback + 3.5) dBm/Hz applies across the whole band from 25.875 kHz to 138 kHz.

The group delay variation over the passband shall not exceed 50 µs.

B.1.2 Transmit power spectral density and aggregate power level

The power emitted by the ATU-R is limited by the specifications in this subclause. In addition, the ATU-R transmitter shall comply with national requirements on emission of electromagnetic energy.

B.1.2.1 All initialization signals (except R-ECT) starting with R-REVERB1

The nominal PSD in the band from 25.875 to 138 kHz shall be set at –38 dBm/Hz for a nominal transmit power not greater than 12.5 dBm. The reference PSD in the band from 25.875 to 138 kHz shall be (–38 – Absolute Upstream Fast Retrain Power Cutback) dBm/Hz for a reference aggregate transmit power of not greater than (12.5 – Absolute Upstream Fast Retrain Power Cutback) dBm.

During the R-REVERB and R-SEGUE signals, all subcarriers from index i to 31 shall be transmitted, with i vendor discretionary. However, at the vendor's discretion, one or more of these subcarriers may not be transmitted during the R-MEDLEY signal.

To allow for non-ideal transmit filter effects (e.g. passband ripple and transition band rolloff), the maximum transmit PSD shall be no more than 1 dB above the reference PSD level. The maximum transmit PSD shall therefore be no higher than (–37 – Absolute Upstream Fast Retrain Power Cutback) dBm/Hz.

B.1.2.2 R-ECT

Because R-ECT is a vendor-defined signal, the PSD specification shall be interpreted only as a maximum. This maximum level is (–37 – Absolute Upstream Fast Retrain Power Cutback) dBm/Hz

IPR2025-00395
Petitioners' Exhibit 1012
Page 118 of 179

for the band from 25.875 to 138 kHz. Subcarriers 1 to 5 may be used, but the power in these carriers shall conform to the specification given in A.1.

B.1.2.3 Steady State data signal

The nominal PSD in the band from 25.875 to 138 kHz shall be set at −38 dBm/Hz. The nominal aggregate power shall be set at −1.65 + 10log(ncup), where ncup is the number of subcarriers used (i.e. with $b_i > 0$) (12.5 dBm if all subcarriers are used). The reference PSD in the band from 25.875 to 138 kHz shall be (−38 − Absolute Upstream Fast Retrain Power Cutback) dBm/Hz. The reference aggregate power shall be set at (−1.65 − Absolute Upstream Fast Retrain Power Cutback + 10log(ncup), where ncup is the number of subcarriers used (12.5 – Absolute Upstream Fast Retrain Power Cutback dBm if all subcarriers are used). The transmit PSD and aggregate power may, however, be changed from their nominal values in either of the following circumstances:

- The bits and gains table (received from the ATU-C during initialization and possibly updated through bit swaps, (see R-B&G in TBD) may not allocate bits to some subcarriers and may finely adjust (i.e. within a −14.5 to +2.5 dB range) the transmit PSD level of others in order to equalize expected error rates on each of those subcarriers.
- Vendor-discretionary transmit PSD levels for unused subcarriers (i.e. with $b_i = 0$). The maximum transmit PSD for these subcarriers is specified in b) and c) below.

To allow for non-ideal transmit filter effects (e.g. passband ripple and transition band rolloff), the maximum transmit PSD shall be no more than 1 dB above the finely adjusted nominal PSD level. The maximum transmit PSD shall therefore be no higher than (−34.5 – Absolute Upstream Fast Retrain Power Cutback) dBm/Hz.

The transmit PSD of each subcarrier is defined as follows:

a) For the subcarriers with ($b_i > 0$), the ATU-R transmitter shall transmit at PSD levels equal to that specified by the g_i (e.g. $g_i = 1$, then transmit at R-MEDLEY transmit PSD level). The aggregate transmit power in these subcarriers shall not exceed $-1.65 + 10\log(\text{ncup}_1)$ dBm by more than 0.7 dB, where ncup_1 is the number of these subcarriers (i.e. with $b_i > 0$).

b) For the subcarriers with ($b_i = 0$ and $g_i > 0$), the ATU-R transmitter should and is recommended to transmit at PSD levels equal to that specified by the g_i (e.g. $g_i = 1$, then transmit at R-MEDLEY level), with a 4-QAM constellation point (which may change from symbol to symbol). The ATU-R receiver cannot assume any particular PSD levels on those subcarriers. The transmit PSD levels of those subcarriers shall be no higher than the R-REVERB1 transmit PSD level + $10\log(g_i^2)$ dB. The aggregate transmit power in these subcarriers shall not exceed $-1.65 + 10\log(\text{ncup}_2)$ dBm, where ncup_2 is the number of these subcarriers (i.e. with $b_i = 0$ and $g_i > 0$).

c) For the subcarriers with ($b_i = 0$ and $g_i = 0$), the ATU-R transmitter should and is recommended to transmit no power on those subcarriers. The ATU-C receiver cannot assume any particular PSD level on those subcarriers. The transmit PSD levels of those subcarriers with $g_i = 0$ shall be at least 10 dB below the sync symbol reference transmit PSD level if the subcarrier is below the lowest used subcarrier (lowest i with $b_i > 0$) and shall be below the sync symbol reference transmit PSD level if the subcarrier is above the lowest used subcarrier.

The aggregate transmit power over the 25.875 to 138 kHz band shall be no higher than 12.5 dBm, which is equivalent to an average transmit PSD of no higher than −38 dBm/Hz.

NOTE – It is recommended that the g_i values for subcarriers with $g_i > 0$ are contrained within ±2.5 dB with respect to g_sync, during initialization and subsequent bitswaps to avoid cyclostationary interference from the synchronization symbol.

IPR2025-00395
Petitioners' Exhibit 1012
Page 119 of 179

B.1.2.4 Synchronization symbol

At Initialization, the sync symbol reference transmit PSD level shall be set at –38 – Absolute Upstream Fast Retrain Power Cutback + 10log(g_{sync}^2) dBm/Hz, with g_{sync}^2 defined as the average g_i^2 value over the used (i.e. $b_i > 0$) subcarriers. The sync symbol reference transmit PSD shall not be updated with user subcarrier gain changes during SHOWTIME.

The transmit PSD level for those subcarriers with $g_i > 0$ shall be the sync symbol reference transmit PSD level. The transmit PSD levels of those subcarriers with $g_i = 0$ shall be at least 10 dB below the sync symbol reference(i.e. nominally –38 – Absolute Upstream Fast Retrain Power Cutback) transmit PSD level if the subcarrier is below the lowest used subcarrier (lowest i with $b_i > 0$) and shall be below the sync symbol reference transmit PSD level if the subcarrier is above the lowest used subcarrier.

Since the g_i are applied only to the data symbols, the transmit PSD of a synchronization symbol differs from the transmit PSD of a data symbol. These g_i are calculated for the multipoint constellations in order to equalize the expected error rate on all subcarriers, and are therefore irrelevant for most of the 4-QAM modulated subcarriers of the synchronization symbol.

B.2 ATU-C transmitter PSD mask

Figure B.2 shows the power spectral density (PSD) mask for an ATU-C transmitter operating in overlapped spectrum mode. The low frequency stop band is defined the voice band. The high frequency stop band is defined as frequencies greater than 552 kHz. The slopes shown are approximate; refer to the equations for the exact slopes.

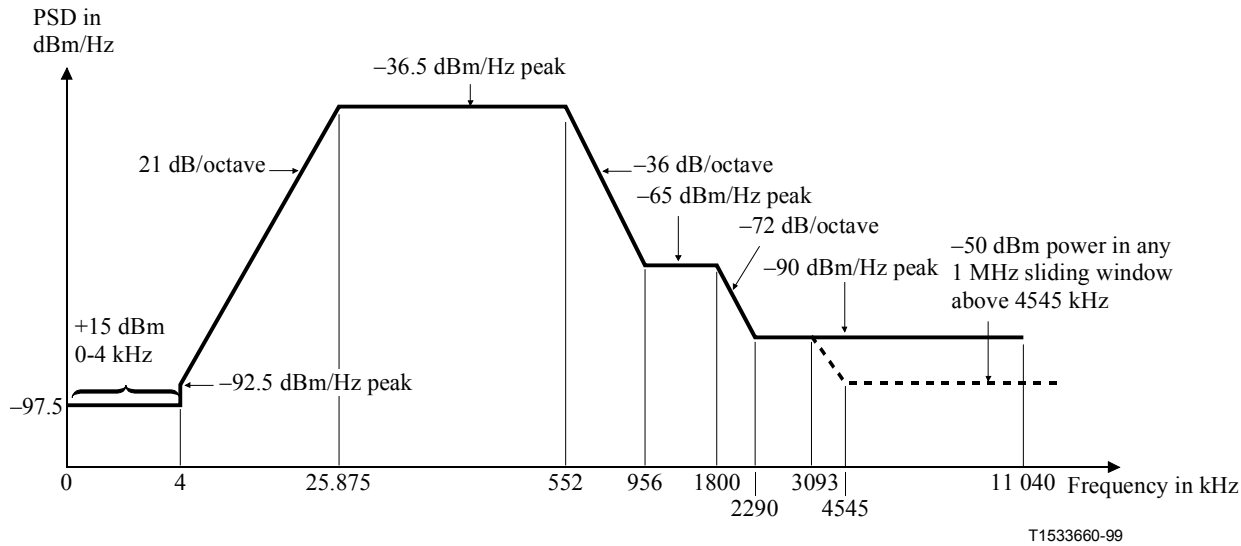

Figure B.2/G.992.2 – ATU-C transmitter PSD mask

IPR2025-00395
Petitioners' Exhibit 1012
Page 120 of 179

Frequency band (kHz)	Equation for line (dBm/Hz)	Impedance (Ohm)	Resolution Bandwidth (kHz)
0-4	–97.5	100	
	with +15 dBrn power in 0-4 kHz window	900	4
>4-25.875	$-92.5 + 21.5 \times \log(f/4)/\log(2)$	100	
25.875-552	–34.5	100	10
552-956	$-36.5 - 36 \times \log(f/552)/\log(2)$	100	10
956-1800	–65	100	10
1800-2290	$-65 - 72 \times \log(f/1800)/\log(2)$	100	10
2290-3093	–90	100	10
3093-4545	< –90 peak	100	10
	with max power in the [f, f + 1 MHz] window of $(-36.5 - 36 \times \log(f/1104)/\log(2) + 60)$ dBm	100	1000
4545-11 040	< –90 peak	100	10
	with max power in the [f, f + 1 MHz] window of –50 dBm	100	1000

B.2.1 Passband PSD ripple and group delay

The average PSD within the used passband shall be no greater than –36.5 dBm/Hz reduced by power cutback in steps of 2 dB. The lower end of the passband is implementation dependent. The upper end depends on whether the signal is for initialization (see B.2.2.1) or steady state (see B.2.2.3).

The passband ripple shall be no greater than +3.5 dB above the specified nominal level; the maximum PSD of $(-40 - 2n + 3.5)$ dBm/Hz applies across the whole band from 25 kHz to 552 kHz where $2n$ is defined in 11.7.5.

The group delay variation over the pass band shall not exceed 50 µs.

B.2.2 Transmit power spectral density and aggregate power level

The power emitted by the ATU-C is limited by the specifications in this subclause. In addition, the ATU-C transmitter shall comply with national requirements on emission of electromagnetic energy.

B.2.2.1 All initialization signals (except C-ECT) starting with C-REVERB1

The nominal PSD in the band from 25.875 to 552 kHz shall be set at –40 dBm/Hz for a nominal aggregate transmit power not greater than 17.2 dBm. The reference PSD in the band from 138 to 552 kHz shall be set at $(-40 - 2n)$ dBm/Hz for reference aggregate transmit power not greater than $16.2 - 2n$ dBm, with 2n as defined in 11.7.5

During the C-REVERB and C-SEGUE signals, all subcarriers from index i to 127 shall be transmitted, with i vendor discretionary. However, at the vendor's discretion, one or more of these subcarriers may not be transmitted during the C-MEDLEY signal.

To allow for non-ideal transmit filter effects (e.g. passband ripple and transition band rolloff), the maximum transmit PSD shall be no more than 1 dB above the nominal PSD level. The maximum transmit PSD shall therefore be no higher than $-39 - 2n$ dBm/Hz.

B.2.2.2 C-ECT

Because C-ECT is a vendor-defined signal, the PSD specification shall be interpreted only as a maximum. This maximum level is $-39 - 2n$ dBm/Hz for the band from 25.875 to 552 kHz.

IPR2025-00395
Petitioners' Exhibit 1012
Page 121 of 179

Subcarriers 1 to 5 may be used, but the power in these carriers shall conform to the specification given in B.2.

B.2.2.3 Steady-state data signal

The nominal PSD in the band from 25.875 to 552 kHz shall be set at –40 dBm/Hz. The nominal aggregate power shall be set at $-3.65 + 10\log(nc_{down})$, where nc_{down} is the number of subcarriers used (i.e. with $b_i > 0$) (17.2 dBm if all subcarriers are used). The reference PSD in the band from 138 to 552 kHz shall be set at $(-40 - 2n)$ dBm/Hz, where $2n$ is defined in 11.7.5. The transmit PSD and aggregate power may, however, be changed from their reference values in either of the following circumstances:

- The bits and gains table (received from the ATU-R during initialization and possibly updated through bit swaps may not allocate bits to some subcarriers and may finely adjust (i.e. within a –14.5 to +2.5 dB range) the transmit PSD level of others in order to equalize expected error rates on each of those subcarriers.
- Vendor-discretionary transmit PSD levels for unused subcarriers (i.e. with $b_i = 0$). The maximum transmit PSD for these subcarriers is specified in b) and c) below.

To allow for non-ideal transmit filter effects (e.g. passband ripple and transition band rolloff), the maximum transmit PSD shall be no more than 1 dB above the finely adjusted reference PSD level. The maximum transmit PSD shall therefore be no higher than $-36.5 - 2n$ dBm/Hz.

The transmit PSD of each subcarrier is defined as follows:

a) For the subcarriers with ($b_i > 0$), the ATU-C transmitter shall transmit at PSD levels equal to that specified by the g_i (e.g. $g_i = 1$, then transmit at C-MEDLEY transmit PSD level). The aggregate transmit power in these subcarriers shall not exceed $-3.65 + 10\log(nc_{down1}) - 2n$ dBm by more than 0.7 dB, where nc_{down1} is the number of these subcarriers (i.e. with $b_i > 0$).

b) For the subcarriers with ($b_i = 0$ and $g_i > 0$), the ATU-C transmitter should and is recommended to transmit at PSD levels equal to that specified by the g_i (e.g. $g_i = 1$, then transmit at C-MEDLEY level), with a 4-QAM constellation point (which may change from symbol to symbol). The ATU-R receiver cannot assume any particular PSD levels on those subcarriers. The transmit PSD levels of those subcarriers shall be no higher than the C-REVERB1 transmit PSD level + $10\log(g_i^2)$ dB. The aggregate transmit power in these subcarriers shall not exceed $-3.65 + 10\log(nc_{down2}) - 2n$ dBm, where nc_{down2} is the number of these subcarriers (i.e. with $b_i = 0$ and $g_i > 0$).

c) For the subcarriers with ($b_i = 0$ and $g_i = 0$), the ATU-R transmitter should and is recommended to transmit no power on those subcarriers. The ATU-C receiver cannot assume any particular PSD level on those subcarriers. The transmit PSD levels of those subcarriers with $g_i = 0$ shall be at least 10 dB below the sync symbol reference transmit PSD level if the subcarrier is below the lowest used subcarrier (lowest i with $b_i > 0$) and shall be below the sync symbol reference transmit PSD level if the subcarrier is above the lowest used subcarrier.

The aggregate transmit power over the 138 to 552 kHz band shall be no higher than $16.2 - 2n$ dBm, which is equivalent to an average transmit PSD of no higher than $-40 - 2n$ dBm/Hz (with n indicating power cutback, $n = 0$ to 6).

NOTE – It is recommended that the g_i values for subcarriers with $g_i > 0$ are contrained within ±2.5 dB with respect to g_sync, during initialization and subsequent bitswaps to avoid cyclostationary interference from the synchronization symbol.

IPR2025-00395
Petitioners' Exhibit 1012
Page 122 of 179

B.2.2.4 Synchronization symbol

At Initialization, the sync symbol reference transmit PSD level shall be set at $-40 - 2n + 10\log(g_{sync}^2)$ dBm/Hz, with g_{sync}^2 defined as the average g_i^2 value over the used (i.e. $b_i > 0$) subcarriers. The sync symbol reference transmit PSD shall not be updated with used subcarrier gain changes during SHOWTIME.

The transmit PSD level for those subcarriers with $g_i > 0$ shall be the sync symbol reference transmit PSD level. The transmit PSD levels of those subcarriers with $g_i = 0$ shall be at least 10 dB below the sync symbol reference transmit PSD level if the subcarrier is below the lowest used subcarrier (lowest i with $b_i > 0$) and shall be below the sync symbol reference transmit PSD level if the subcarrier is above the lowest used subcarrier.

Since the g_i are applied only to the data symbols, the transmit PSD of a synchronization symbol differs from the transmit PSD of a data symbol. These g_i are calculated for the multipoint constellations in order to equalize the expected error rate on all subcarriers, and are therefore irrelevant for most of the 4-QAM modulated subcarriers of the synchronization symbol.

ANNEX C

ADSL above POTS co-existing in the same binder as TCM-ISDN DSL

C.1 Scope

This annex describes those specifications that are unique to an ADSL system co-existing in the same binder as TCM-ISDN as defined in Appendix III/G.961. The subclauses in this annex provide the additions and modifications to the corresponding clauses in the main body. The modifications described in this annex provide a performance improvement over the Splitterless ADSL system specified in main body in an environment co-existing with TCM-ISDN. It is preferred that ADSL system implementing this annex also implements the main body.

C.2 Definitions and abbreviations

C.2.1 Definitions

C.2.1.1 Dual Bitmap: The Dual Bitmap method has dual bit rates under the FEXT and NEXT noise from TCM-ISDN.

C.2.1.2 FEXT Bitmap: Similar to the Dual Bitmap method; however, transmission only occurs during FEXT noise from TCM-ISDN.

C.2.1.3 Hyperframe: Five Superframes structure which synchronized TTR.

C.2.1.4 Bitmap-F_R: ATU-C transmitter bitmap under TCM-ISDN FEXT noise generated at ATU-R.

C.2.1.5 Bitmap-N_R: ATU-C transmitter bitmap under TCM-ISDN NEXT noise generated at ATU-R.

C.2.1.6 Bitmap-F_C: ATU-R transmitter bitmap under TCM-ISDN FEXT noise generated at ATU-C.

C.2.1.7 Bitmap-N_C: ATU-R transmitter bitmap under TCM-ISDN NEXT noise generated at ATU-C.

C.2.1.8 $FEXT_R$ duration: TCM-ISDN FEXT duration at ATU-R estimated by the ATU-C.

IPR2025-00395
Petitioners' Exhibit 1012
Page 123 of 179

C.2.1.9 **$NEXT_R$ duration**: TCM-ISDN NEXT duration at ATU-R estimated by the ATU-C.

C.2.1.10 **$FEXT_C$ duration**: TCM-ISDN FEXT duration at ATU-C estimated by the ATU-R.

C.2.1.11 **$NEXT_C$ duration**: TCM-SDN NEXT duration at ATU-C estimated by the ATU-R.

C.2.1.12 **$FEXT_R$ symbol**: DMT symbol transmitted by ATU-C during TCM-ISDN FEXT.

C.2.1.13 **$NEXT_R$ symbol**: DMT symbol transmitted by ATU-C during TCM-ISDN NEXT.

C.2.1.14 **$FEXT_C$ symbol**: DMT symbol transmitted by ATU-R during TCM-ISDN FEXT.

C.2.1.15 **$NEXT_C$ symbol**: DMT symbol transmitted by ATU-R during TCM-ISDN NEXT.

C.2.1.16 N_{SWF}: Sliding window frame counter.

C.2.2 Abbreviations

TTR TCM- ISDN Timing Reference

TTR_C Timing Reference used in ATU-C

TTR_R Timing Reference used in ATU-R

UI Unit Interval

C.3 Reference models

C.3.1 ATU-C transmitter reference model (replaces figure in 4.2)

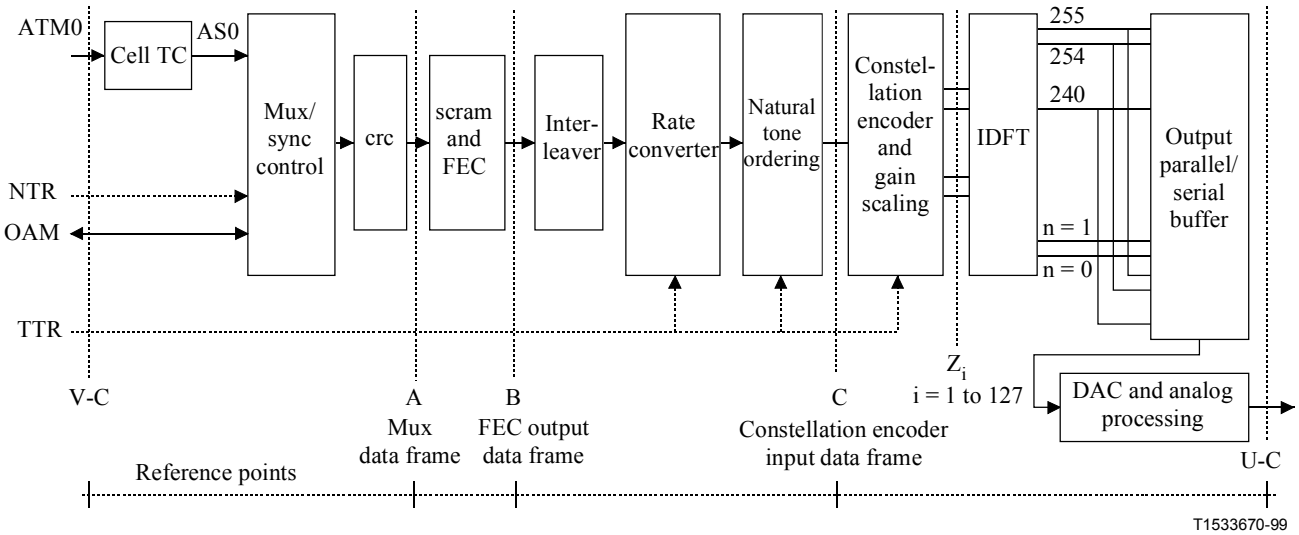

NOTE – The TTR may be generated in the ATU-C without being provided from the V-C reference point TCM-ISDN clock.

Figure C.1/G.992.2 – ATU-C transmitter reference model for ATM transport

IPR2025-00395
Petitioners' Exhibit 1012
Page 124 of 179

C.3.2 ATU-R transmitter reference model (replaces figure in 4.2)

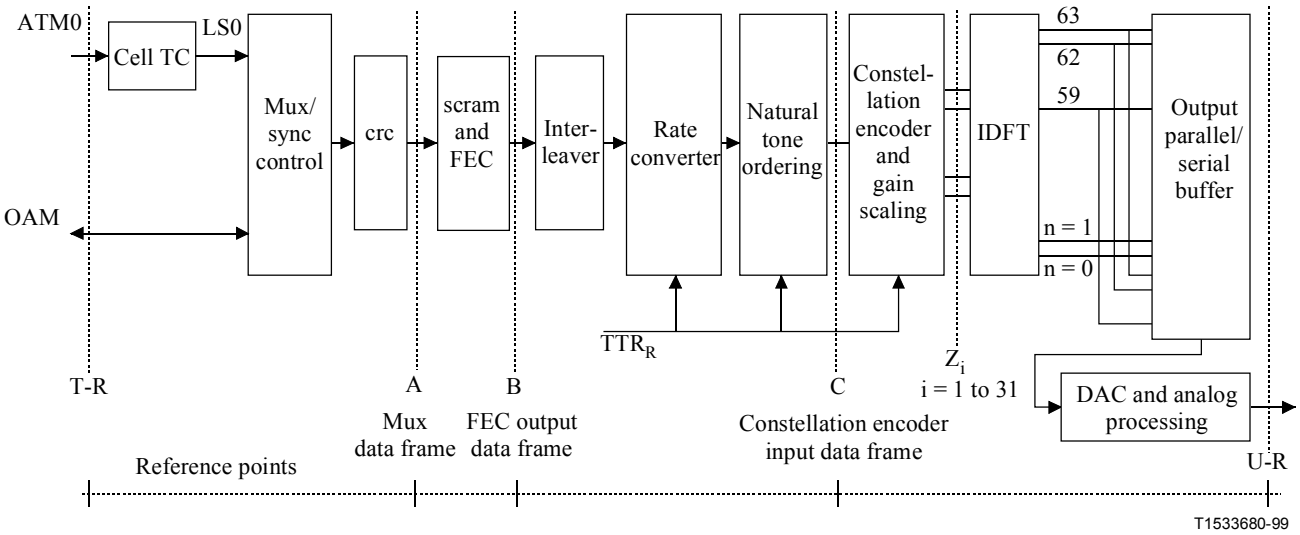

NOTE – The TTR_R shall be generated in the ATU-R from the received TTR_C, and shall be locked to 690 periods of upstream sampling clock (276 kHz).

Figure C.2/G.992.2 – ATU-R transmitter reference model for ATM transport

IPR2025-00395
Petitioners' Exhibit 1012
Page 125 of 179

C.3.3 ATU transmitter timing model (new)

C.3.3.1 TCM-ISDN crosstalk timing model (new)

Figure C.3 shows the timing chart of the crosstalk from TCM-ISDN.

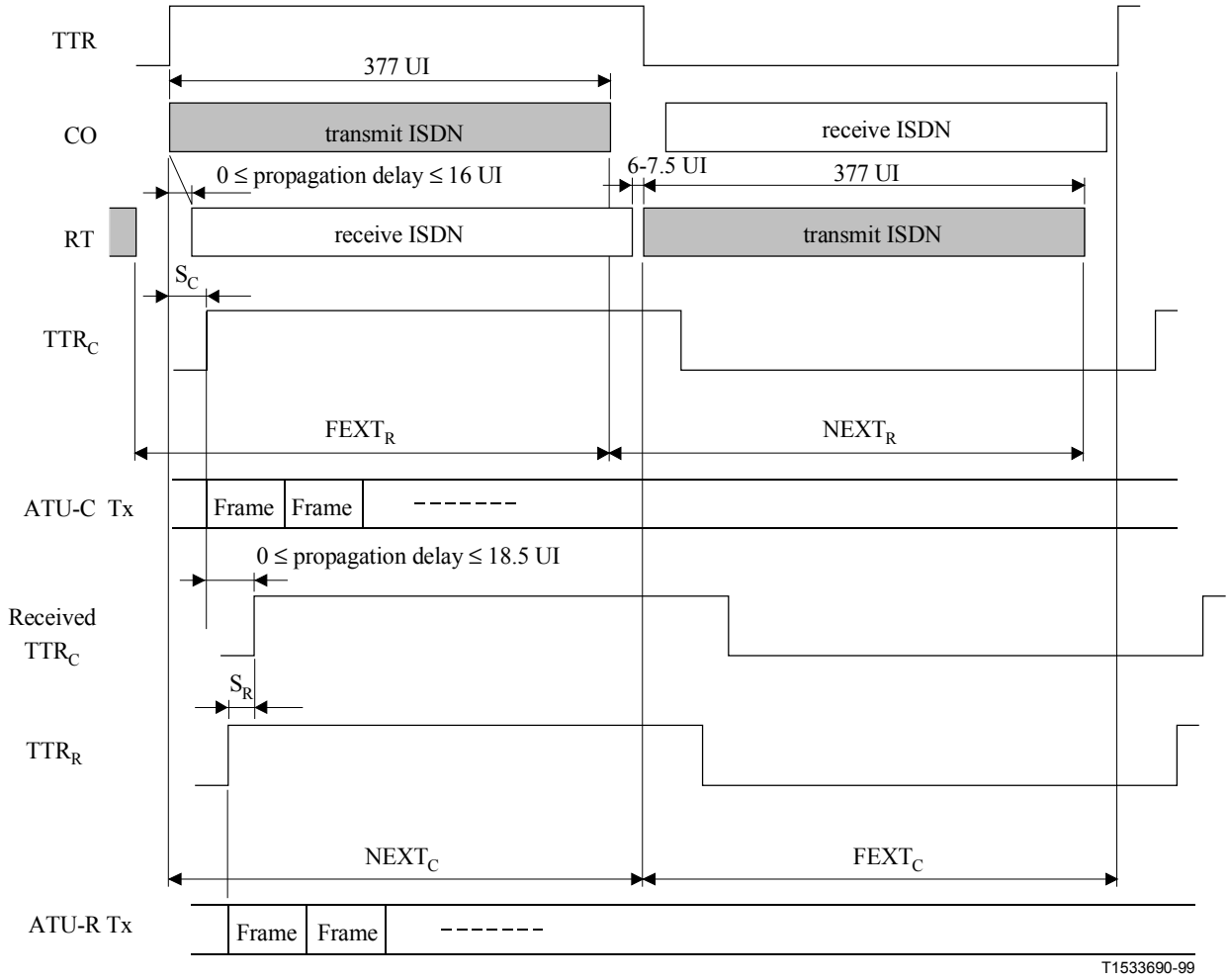

1 UI = 3.125 µs

$FEXT_R$ and $NEXT_R$ are estimated by the ATU-C

$FEXT_C$ and $NEXT_C$ are estimated by the ATU-R

TTR	TCM-ISDN Timing reference
TTR_C	Timing reference used in ATU-C
Received TTR_C	Received TTR_C at ATU-R
TTR_R	Timing reference used in ATU-R
S_C	55×0.9058 µs: Offset from TTR to TTR_C
S_R	-42×0.9058 µs: Offset from received TTR_C to TTR_R

Figure C.3/G.992.2 – Timing chart of the TCM-ISDN cross-talk

The data stream of TCM-ISDN transmitted in a TTR period. The TCM-ISDN CO transmits the symbols in the first half of the TTR period and the TCM-ISDN RT transmits in the second half of the TTR period. The ATU-C receives NEXT noise from ISDN in the first half of the TTR period and FEXT noise from ISDN in the second half of the TTR period. On the other hand, the ATU-R receives FEXT noise from the TCM-ISDN in the first half of the TTR period and NEXT noise from the ISDN in the second half of the TTR period.

IPR2025-00395
Petitioners' Exhibit 1012
Page 126 of 179

As defined in C.5.2.2 and in C.8, the ATU-C shall estimate the $FEXT_R$ and $NEXT_R$ duration at ATU-R, and ATU-R shall estimate $FEXT_C$ and $NEXT_C$ duration at ATU-C taking propagation delay on the subscriber line into consideration.

The ATU-C shall transmit any symbol by synchronizing with the TTR_C. The ATU-R shall transmit any symbol by synchronizing with the TTR_R generated from received TTR_C.

C.3.3.2 Sliding Window (new)

Figure C.4 shows the timing chart of the downstream transmission.

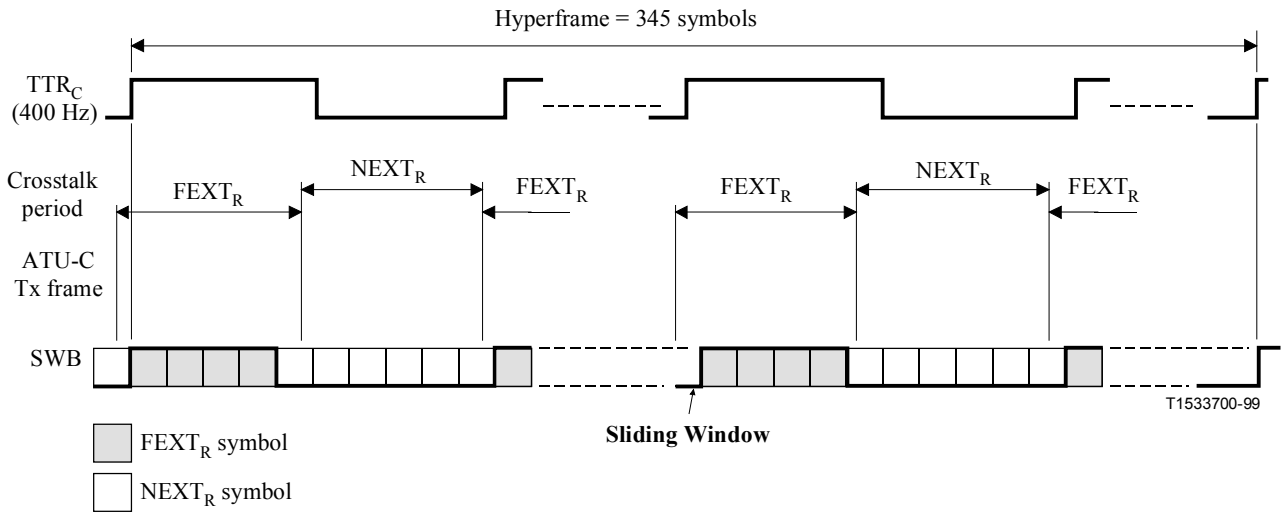

Figure C.4/G.992.2 – Sliding Window

The "Sliding Window" operation defines the procedures to transmit symbols under the crosstalk noise environment synchronized to the period of the TTR. The $FEXT_{C/R}$ symbol represents the symbol completely inside the $FEXT_{C/R}$ duration. The $NEXT_{C/R}$ symbol represents the symbol containing any $NEXT_{C/R}$ duration. Thus, there are more $NEXT_{C/R}$ symbols than $FEXT_{C/R}$ symbols.

The ATU-C decides which transmission symbol is a $FEXT_R$ or $NEXT_R$ symbol according to the Sliding Window and transmits it with the corresponding bit table. Similarly, ATU-R decides which transmission symbol is a $FEXT_C$ or $NEXT_C$ and transmits it with the corresponding bit table. Although the phase of the Sliding Window is asynchronous with the $TTR_{C/R}$, the pattern is fixed to the 345 frames of the hyperframe (see C.5.2.2).

C.3.3.3 ATU-C symbol synchronization to TTR_C (new)

The time duration of 345 symbols is equal to 34 cycles of TTR_C (or 32 cycles of TTR_C for symbols without a cyclic prefix). This implies a PLL lock at the ATU-R.

C.3.3.4 Dual Bitmap switching (new)

The ATU-C transmits $FEXT_R$ symbols using Bitmap-F_R (in $FEXT_R$ duration), and transmits $NEXT_R$ symbols using Bitmap-N_R (in $NEXT_R$ duration) according to the result of initialization. The ATU-R transmits $FEXT_C$ symbols using Bitmap-F_C (in $FEXT_C$ duration), and transmits $NEXT_C$ symbols using Bitmap-N_C (in $NEXT_C$ duration) in the same manner.

IPR2025-00395
Petitioners' Exhibit 1012
Page 127 of 179

The ATU-C shall have the capability to disable transmission during $NEXT_{C/R}$ (see Table 11-i/G.994.1), In this case, the ATU-C shall transmit only the pilot tone as $NEXT_R$ symbol, and ATU-R shall transmit silence as the $NEXT_C$ symbol (see C.5.5 and C.5.7).

C.3.3.5 Loop timing at ATU-R (new)

The phase relation between received symbol and transmitted symbol of ATU-R at reference point U-R shall meet the phase tolerances as shown in Figure C.5.

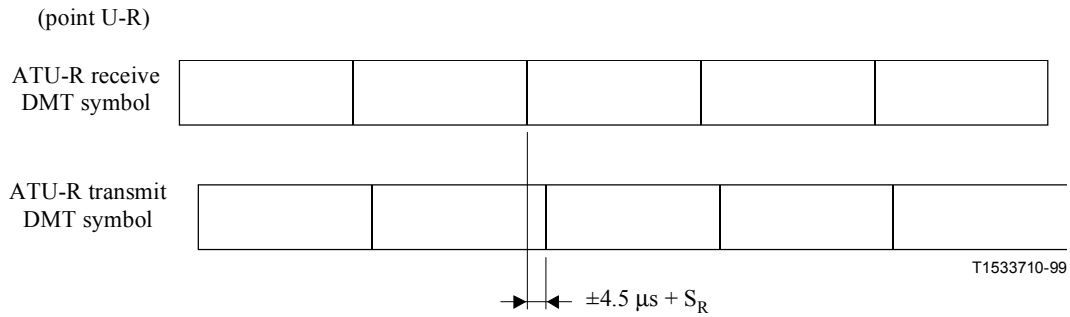

Figure C.5/G.992.2 – Loop timing for ATU-R

C.4 ATU interfaces

C.4.1 ATM interface for ATM transport (replaces figure in 6.1)

The functional data interface at the ATU for ATM transport are shown in Figure C.6.

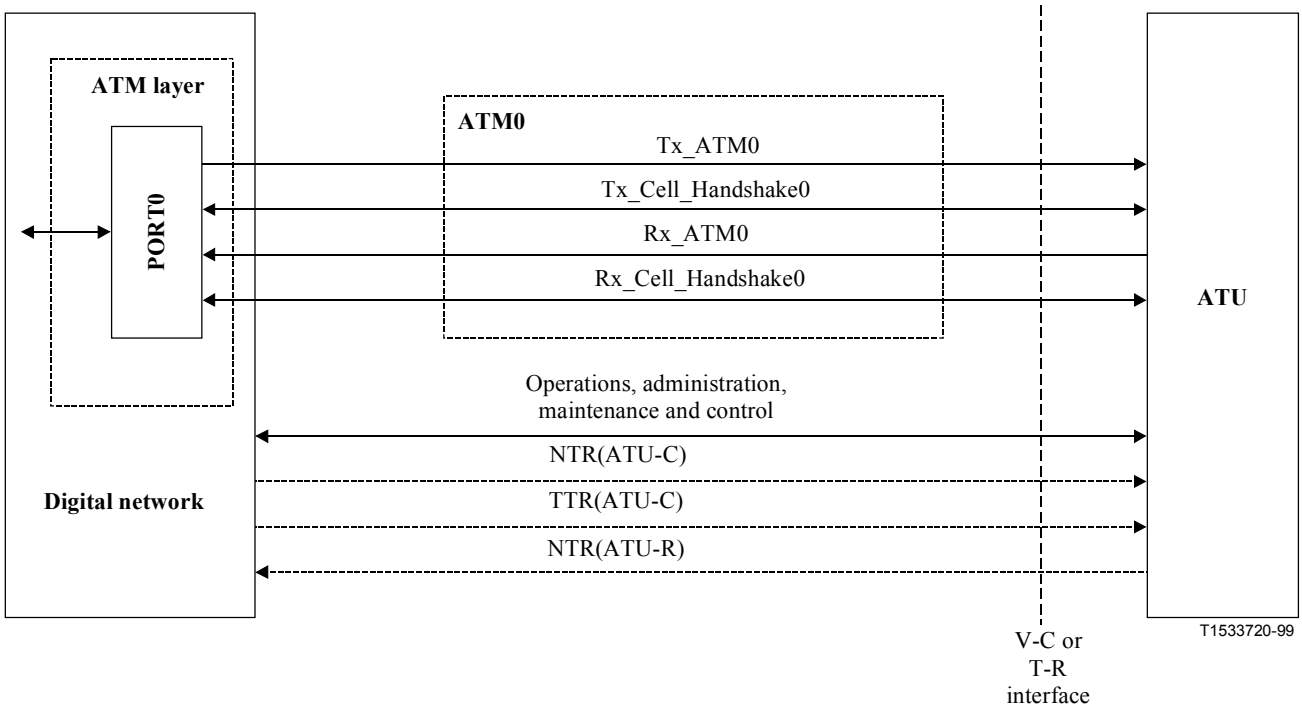

NOTE – The TTR may be generated in the ATU-C without being provided from the V-C reference point.

Figure C.6/G.992.2 – ATU functional interfaces to the ATM layer at the V or T reference point

IPR2025-00395
Petitioners' Exhibit 1012
Page 128 of 179

C.5 ATU functional characteristics (pertains to clause 7)

C.5.1 Payload transfer delay (supplements 7.1.1)

The one-way transfer delay (excluding cell specific functionalities) for payload bits from the V reference point at the central office end (V-C) to the T reference point at remote the end (T-R) shall be as specified in 7.1.1 with an additional 5 ms for transfer delay attributed to the rate converter. The same requirement applies in the opposite direction, from the T-R reference point to the V-C reference point.

The maximum rate converter delay specified in the above text shall not apply to bit rates of 32 kbit/s and 64 kbit/s.

C.5.2 Framing (pertains to 7.3)

C.5.2.1 Superframe structure (supplements 7.3.3.1)

Since the rate converter reorders the user data and overhead bit-level data to create hyperframes, the input data frames to the constellation encoder are different than those defined in 7.3.3.1.

C.5.2.2 Hyperframe structure (new)

This annex uses the hyperframe structure shown in Figures C.7 and C.8. Both figures show the phase relationship between the $TTR_{C/R}$ and the hyperframe at the point U-C and U-R. Each hyperframe is composed of five superframes, which are numbered from 0 to 4. In order to indicate the boundary of the hyperframe, the inverse synch symbol is used for the N_{inv}-th superframe, which is generated from a tone-by-tone 180-degree phase reversal of the synchronization symbol (see C.5.3.1) except for the pilot tone. N_{inv}-th is defined as:

$$N_{inv}\text{-th} = \begin{cases} 3 \text{ (SPF\#3) for downstream} \\ 0 \text{ (SPF\#0) for upstream} \end{cases}$$

The FEC Output Frame from the interleaver is put into the rate-converter. The bit-level data stream from the rate-converter is extracted according to the size of Bitmap-$F_{R/C}$ and Bitmap-$N_{R/C}$ using the Sliding Window (see C.3.3.2 and C.3.3.4).

In order to make the bit rate to be a multiple of 32 kbit/s, the dummy bits are inserted at the end of hyperframe by the rate converter (see C.5.6). The hyperframe is composed of 345 DMT symbols, numbered from 0 to 344. Each symbol is assigned as a $FEXT_{R/C}$ or $NEXT_{R/C}$ symbol in a $FEXT_{R/C}$ or $NEXT_{R/C}$ duration (see C.3.3.1). The following numerical formula gives the information which duration N_{dmt}-th DMT symbol belongs to at ATU transmitter.

Downstream data (see Figure C.9):

For (N_{dmt} = 0, 1, ..., 344)

$S = 272 \times N_{dmt} \bmod 2760$

if { (S + 271 < a) or (S > a + b) } then $FEXT_R$ symbol

else then $NEXT_R$ symbol

where a = 1243, b = 1461

IPR2025-00395
Petitioners' Exhibit 1012
Page 129 of 179

Upstream data (see Figure C.10):

For (N_{dmt} = 0, 1, ..., 344)

$S = 272 \times N_{dmt} \bmod 2760$

if { (S > a) and (S + 271 < a + b) } then $FEXT_C$ symbol

else then $NEXT_C$ symbol

where a = 1315, b = 1293

Thus, 128 DMT symbols are allocated in the $FEXT_{R/C}$ duration ($FEXT_{C/R}$ symbols), and 217 DMT symbols are allocated in the $NEXT_{R/C}$ duration ($NEXT_{C/R}$ symbols). The symbols are composed of:

$FEXT_{C/R}$ symbol:

– Number of symbols using Bitmap-$F_{R/C}$ = 126
– Number of synch symbols = 1
– Number of inverse synch symbols = 1

$NEXT_{C/R}$ symbol:

– Number of symbols using Bitmap-$N_{R/C}$ = 214
– Number of synch symbols = 3

During FEXT Bitmap mode, the ATU-C shall transmit only the pilot tone as $NEXT_R$ symbol and the ATU-R shall not transmit any signal as $NEXT_C$ symbol.

IPR2025-00395
Petitioners' Exhibit 1012
Page 130 of 179

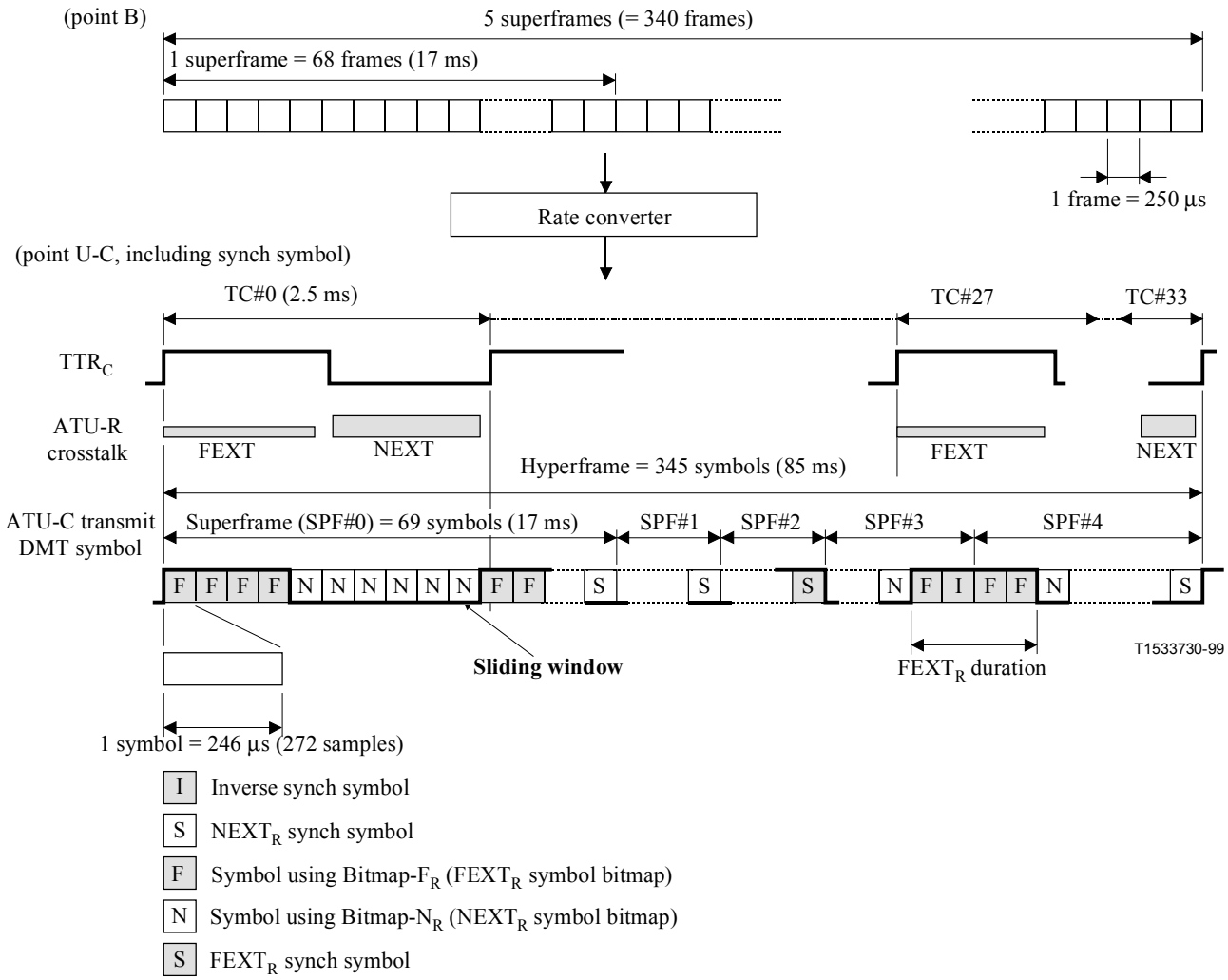

Figure C.7/G.992.2 – Hyperframe structure for downstream

IPR2025-00395
Petitioners' Exhibit 1012
Page 131 of 179

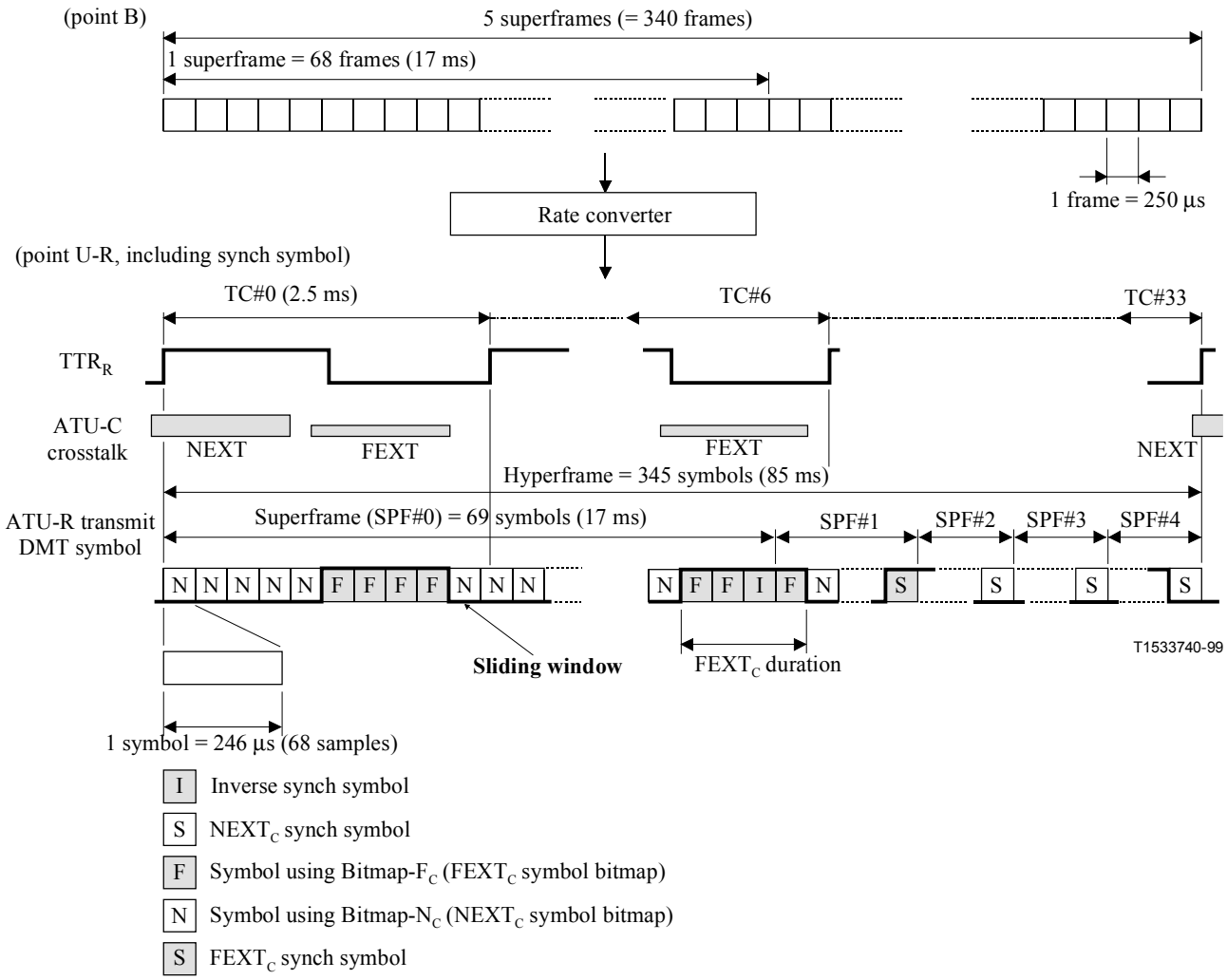

Figure C.8/G.992.2 – Hyperframe structure for upstream

IPR2025-00395
Petitioners' Exhibit 1012
Page 132 of 179

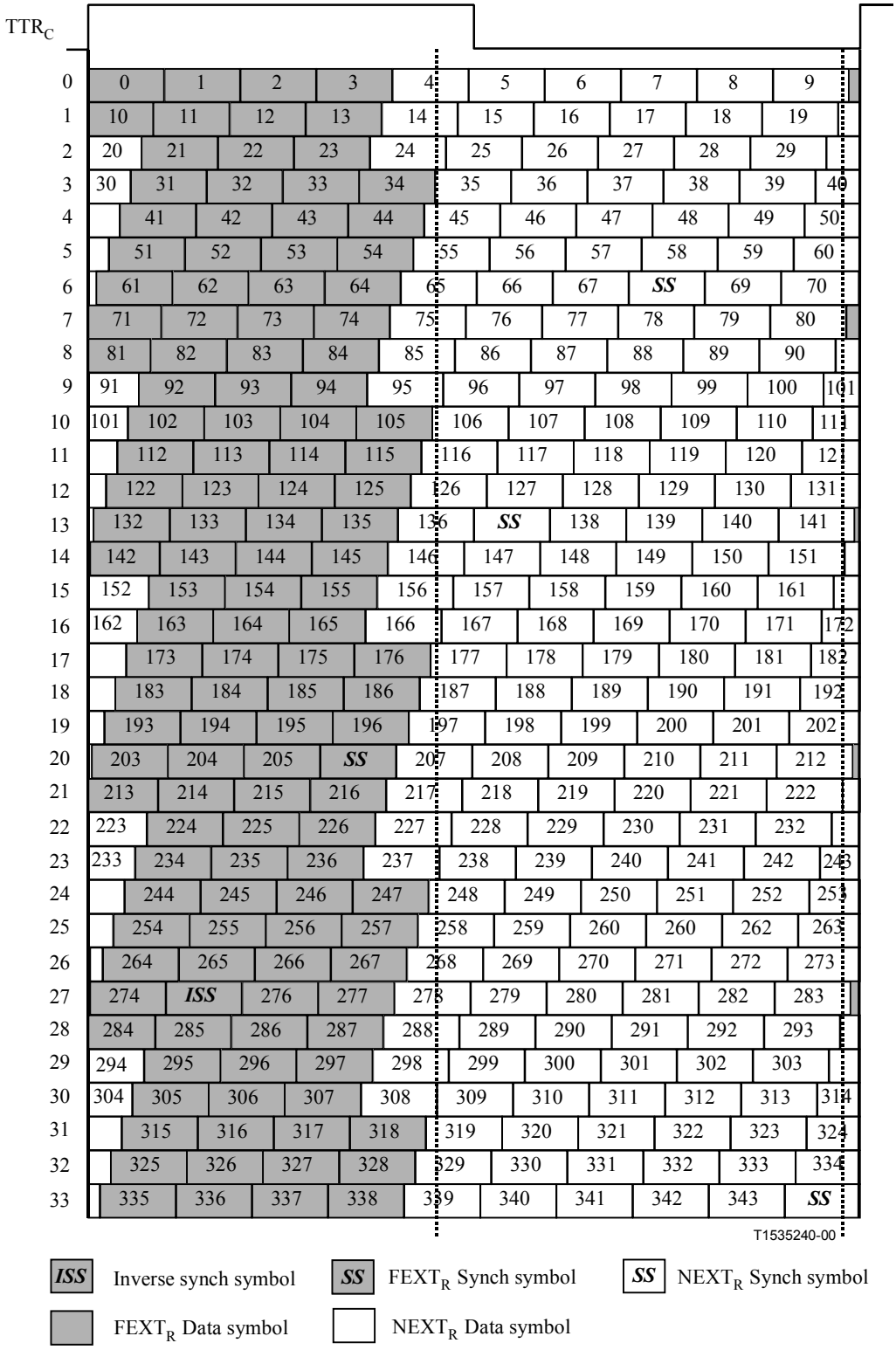

Figure C.9/G.992.2 – Symbol pattern in a hyperframe with cyclic prefix – Downstream

PR2025-00395
Petitioners' Exhibit 1012
Page 133 of 179

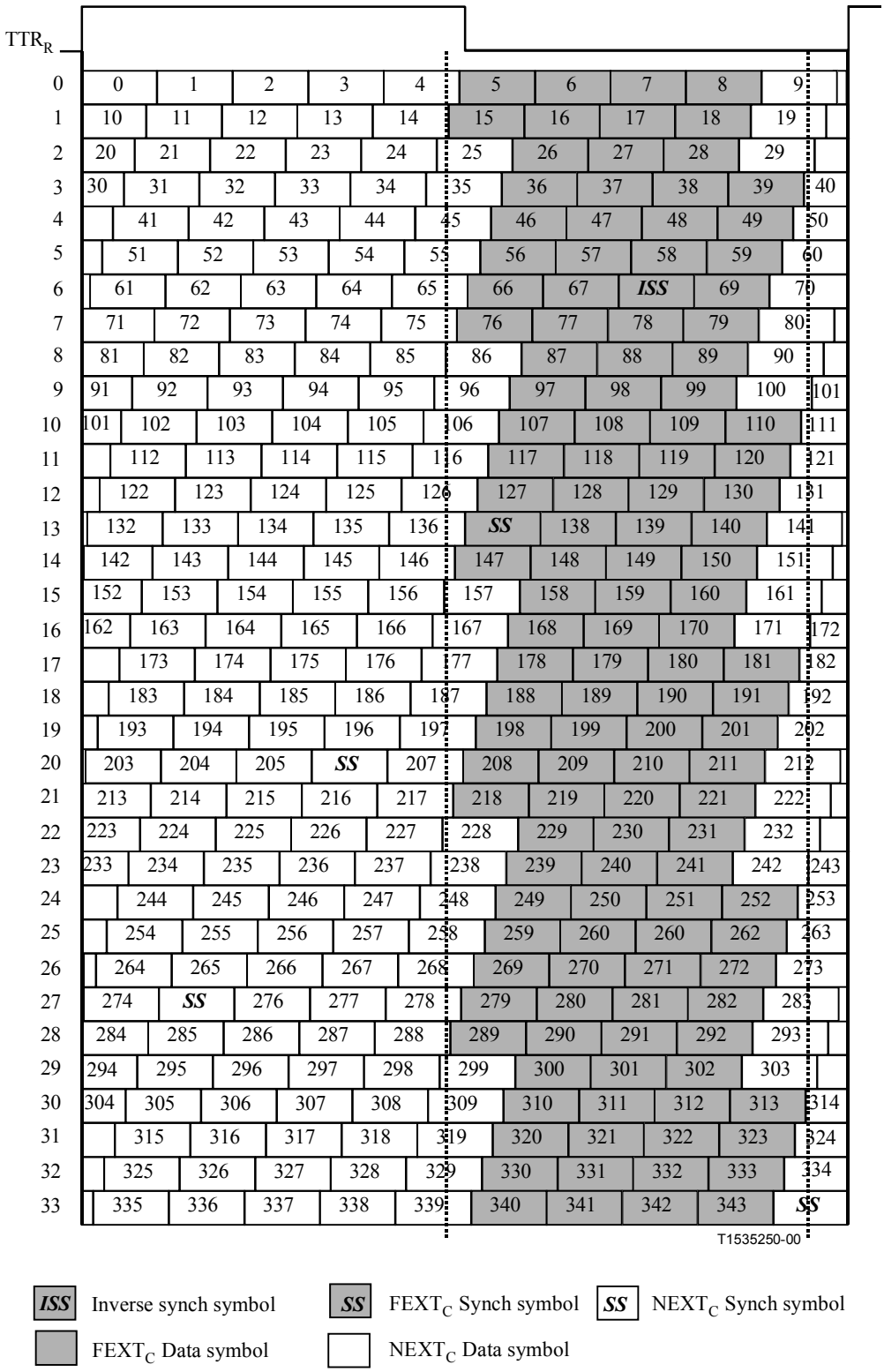

Figure C.10/G.992.2 – Symbol pattern in a hyperframe with cyclic prefix – Upstream

C.5.3 Modulation (pertains to 7.10)

C.5.3.1 Inverse Synchronization Symbol (new)

Except for the pilot tone, the Inverse Synchronization symbol shall be generated from a tone-by-tone 180-degree phase reversal of Synchronization symbol (i.e. + maps to –, and – maps to +, for each of the 4-QAM signal constellation).

IPR2025-00395
Petitioners' Exhibit 1012
Page 134 of 179

C.5.3.2 Gain scaling of synchronization symbol

At Initialization, the sync symbol reference transmit PSD level shall be set at the reference PSD level + $10\log(g_{sync}^2)$ dBm/Hz, with g_{sync}^2 defined as the average g_i^2 value over the used (i.e. $b_i > 0$) subcarriers in the NEXT or FEXT bitmap, whichever results in the highest average gain. The sync symbol reference transmit PSD shall not be updated with used subcarrier gain changes during SHOWTIME.

C.5.4 Transmitter spectral mask (replaces 7.12.3)

The spectral mask of this annex shall use the same masks as Annex A or Annex B. When C-MSG1 bit 16 is 0_b, the PSD mask specified in Annex A shall be used. When C-MSG1 bit 16 is 1, the PSD mask specified in Annex B shall be used.

C.5.5 Dual Bitmap (new)

The Dual Bitmap method has individual bit rates under the FEXT and NEXT noise, and this needs an additional bit and gain table, $\{b_i, g_i\}$. The dual bitmaps are switched synchronized with the sliding window pattern of NEXT/FEXT symbols.

C.5.6 Rate Converter (new)

The output of the interleaver is input to the rate converter. The rate converter buffering changes the data frame boundaries between the reference points B and C according to Bitmap-$F_{R/C}$, Bitmap-$N_{R/C}$ and the Sliding Window. However for the difference of the data rates between the reference points B and C, and to make the bit rate to be a multiple of 32 kbit/s, the dummy bits are inserted at the end of the hyperframe. The number of the dummy bits shall be:

$$\#\,dummy_R = (f_R \times 126 + n_R \times 214) - (t_R \times 340) \qquad \text{for downstream data}$$

$$\#dummy_C = (f_C \times 126 + n_C \times 214) - (t_C \times 340) \qquad \text{for upstream data}$$

where t_R is the number of allocated bits in one frame at the reference point B in ATU-C transmitter, f_R and n_R are the numbers of bits in Bitmap-F_R and Bitmap-N_R, respectively. Similarly, where t_C is the number of allocated bits in one frame at the reference point B in ATU-R transmitter, f_C and n_C are the numbers of bits in Bitmap-F_C and Bitmap-N_C, respectively. During FEXT Bitmap mode, n_R and n_C are zero.

At the receiver, the inserted dummy bits shall be removed.

The receiver shall determine Bitmap-$F_{R/C}$ and Bitmap-$N_{R/C}$ so that the number of dummy bits is less than 126 in initialization sequence.

C.5.7 FEXT Bitmap (new)

The FEXT Bitmap mode uses the Dual Bitmap technique (see C.5.5) only during FEXT. When Bitmap-N_R and Bitmap-N_C are disabled (see Table 11-i/G.994.1), the ATU-C shall transmit only the pilot tone as $NEXT_R$ symbol and the ATU-R shall not transmit any signal as $NEXT_C$ symbol (see Figures C.7 and C.8).

The Dual versus FEXT bit mapping mode is selected during G.994.1 using bit "DBM" (see 11.2 and 11.3).

IPR2025-00395
Petitioners' Exhibit 1012
Page 135 of 179

C.6 aoc on-line adaptation and reconfiguration (pertains to clause 9)

C.6.1 Bit swap request message encoding (replaces 9.2.4)

This message tells the transmitter which subcarriers are to be modified. The format of the request is shown in Table C.1.

Table C.1/G.992.2 – Format of the bit swap request message

Message header	Message field 1-4		
$\{11111111_b\}$ (8 bits)	Bitmap index (1 bit)	Command (7 bits)	Subcarrier index (8 bits)

The request shall comprise nine bytes as follows:

- An aoc message header consisting of eight binary ones.
- Message fields 1-4, each of which each consists of a one-bit bitmap index, a seven-bit command followed by a related eight-bit subcarrier index. One-bit bitmap index and valid seven-bit commands for the bit swap message shall be as shown in Table C.2. In Table C.2, the MSB for the bit swap request command represents the bitmap index. In the Bitmap index, 0 indicates Bitmap F_R, and 1_b indicates N_R for downstream data. Similarly, 0 indicates Bitmap F_C and 1_b indicates N_C for upstream data. The eight-bit subcarrier index is counted from low to high frequencies with the lowest frequency subcarrier having the number zero. The subcarrier index zero shall not be used.
- The bit swap between $FEXT_{C/R}$ symbols and $NEXT_{C/R}$ symbols is not allowed.

Table C.2/G.992.2 – Bit swap request command

Value (8 bit)	Interpretation
$y0000000_b$	Do nothing
$y0000001_b$	Increase the number of allocated bits by one
$y0000010_b$	Decrease the number of allocated bits by one
$y0000011_b$	Increase the transmitted power by 1 dB
$y0000100_b$	Increase the transmitted power by 2 dB
$y0000101_b$	Increase the transmitted power by 3 dB
$y0000110_b$	Reduce the transmitted power by 1 dB
$y0000111_b$	Reduce the transmitted power by 2 dB
$y0001xxx_b$	Reserved for vendor discretionary commands
NOTE – y is "0_b" for $FEXT_{C/R}$ symbols, and "1_b" for $NEXT_{C/R}$ symbols of the Sliding Window.	

To avoid g_i divergence between ATU-C and ATU-R after several bit swaps, for a g_i update of Δ dB the new g_i value should be given by:

$$g_i' = (1/512) \times \text{round}(512 \times g_i \times 10 \exp(\Delta/20))$$

IPR2025-00395
Petitioners' Exhibit 1012
Page 136 of 179

C.6.2 Extended bit swap request message encoding (supplements 9.2.5)

The format of the extended bit swap request is shown in Table C.3.

Table C.3/G.992.2 – Format of the bit swap request message

Message header	Message field 1-6		
$\{11111100_b\}$ (8 bits)	Bitmap index (1 bit)	Command (7 bits)	Subcarrier index (8 bits)

In the same manner as the bit swap request, each of the massage fields of the extended bit swap request consists of a one-bit bitmap index, a seven-bit command followed by a related eight-bit subcarrier index.

C.6.3 Bit swap acknowledge message encoding (supplements 9.2.6)

The bit swap superframe counter number shall only indicate the last superframe (SPF#4) of a hyperframe.

The new bit and/or transmit power table(s) shall then take effect starting from the first frame (frame 0) of SPF#0 of a hyperframe.

If the bit swap superframe counter number contained in the received bit swap acknowledge message does not indicate SPF#4, then the new table(s) shall take effect starting from frame 0 of SPF#0 of the next hyperframe.

C.7 In-service performance monitoring and surveillance (pertains to clause 10)

C.7.1 ADSL line related primitives (pertains to 10.1)

C.7.1.1 ADSL line related near-end defects (supplements 10.1.3)

Two near-end defects are defined:

- *Loss of signal (LOS)*: ADSL power shall be measured only in the $FEXT_C$ duration at ATU-C, or only in the $FEXT_R$ duration at ATU-R.
- *Severely Errored Frame (SEF)*: A SEF defect occurs when the content of two consecutively received ADSL synchronization symbols in the $FEXT_C$ duration at ATU-C, or in the $FEXT_R$ duration at ATU-R, does not correlate with the expected content over a subset of the tones. A SEF defect terminates when the content of two consecutively received ADSL synchronization symbols in the $FEXT_C$ duration at ATU-C, or in the $FEXT_R$ duration at ATU-R, correlate with the expected contents over the same subset. The correlation method, the selected subset of tones, and the threshold for declaring these defect conditions are implementation discretionary.

C.7.1.2 ADSL line related far-end defects (supplements 10.1.4)

Far-end Loss of signal (LOS): The ADSL power shall be measured only in the $FEXT_C$ duration at ATU-C, or only in the $FEXT_R$ duration at ATU-R.

IPR2025-00395
Petitioners' Exhibit 1012
Page 137 of 179

C.7.2 Test parameters (supplements 10.4)

C.7.2.1 Near-end test parameters (supplements 10.4.1)

The following near-end test parameters are defined:

- *Attenuation (ATN)*: The received signal power shall be measured only in the $FEXT_C$ duration at ATU-C, or only in the $FEXT_R$ duration at ATU-R.
- *Signal-to-Noise ratio (SNR)* margin: During the FEXT Bitmap mode, this primitive represents the SNR margin in the $FEXT_C$ duration at ATU-C, or in the $FEXT_R$ duration at ATU-R.

C.7.2.2 Far-end test parameters (supplements 10.4.2)

The following far-end test parameters are defined:

- *Attenuation (ATN)*: The received signal power shall be measured only in the $FEXT_C$ duration at ATU-C, or only in the $FEXT_R$ duration at ATU-R.
- *Signal-to-Noise ratio (SNR)* margin: During the FEXT Bitmap mode, this primitive represents the SNR margin in the $FEXT_C$ duration at ATU-C, or in the $FEXT_R$ duration at ATU-R.

C.8 Initialization

C.8.1 Initialization with Hyperframe (new)

The exchange of messages between ATU-C and ATU-R are performed using $FEXT_C$ and $FEXT_R$ symbols. The initialization sequence has two symbol rates. One is 4.3125 kbaud for the symbol without a cyclic prefix, and the other is $4 \times 69/68$ kbaud for the symbol with a cyclic prefix. 32 TTR cycles have the same period as 345 times 4.3125 kHz DMT symbols, and 34 TTR cycles have the same period as 345 times $4 \times 69/68$ kHz DMT symbols.

During FEXT Bitmap mode, the ATU-R shall not transmit any signal as the $NEXT_C$ symbols and the ATU-C shall transmit the pilot tone as the $NEXT_R$ symbols except:

- C-PILOT1 (C-PILOT1A): accompanied by A_{48} signal (see C.8.3.1);
- C-QUIETn: not transmit any signal.

The ATU-C shall enter C-PILOT1 at the beginning of the hyperframe. The ATU-C transmits information regarding the phase of the TTR_C to ATU-R during C-PILOT1. The ATU-R shall enter R-REVERB1 at the beginning of the hyperframe without cyclic prefix.

From C-PILOT1 to C-SEGUE1, the following numerical formula gives the information which duration N_{dmt}-th DMT symbol belongs to (see Figure C.11):

For (N_{dmt} = 0, 1, ..., 344)

$S = 256 \times N_{dmt} \bmod 2760$

if { $(S + 255 < a)$ or $(S > a + b)$ } then $FEXT_R$ symbol

else then $NEXT_R$ symbol

where a = 1243, b = 1461

In order to enter C-RATES1 at the beginning of the hyperframe with cyclic prefix, the number of symbols from C-PILOT1 to C-SEGUE1 shall be a multiple of 345 DMT symbols.

IPR2025-00395
Petitioners' Exhibit 1012
Page 138 of 179

From R-REVERB1 to R-SEGUE1, the following numerical formula gives the information which duration N_{dmt}-th DMT symbol belongs to (see Figure C.12):

For $S = 256 \times N_{dmt} \bmod 2760$ ($N_{dmt} = 0, 1, ..., 344$)

if { (S > a) and (S + 255 < a + b) }	then $FEXT_C$ symbol
else	then $NEXT_C$ symbol

where a = 1315, b = 1293

From C-RATES1 to C-SEGUE3, the number of symbols is a multiple of 345 DMT symbols. The following numerical formula gives the information which duration N_{dmt}-th DMT symbol belongs to. ATU-C transmits the message data in $FEXT_R$ symbols (see Figure C.9).

For ($N_{dmt} = 0, 1, ..., 344$)

$S = 272 \times N_{dmt} \bmod 2760$

if { (S + 271 < a) or (S > a + b) }	then $FEXT_R$ symbol
else	then $NEXT_R$ symbol

where a = 1243, b = 1461

The ATU-R enters R-REVERB3 at the beginning of the hyperframe with cyclic prefix, which is extracted from received signal. From R-REVERB3 to R-SEGUE5 the number of symbols is a multiple of 345 DMT symbols. The following numerical formula gives the information which duration N_{dmt}-th DMT symbol belongs to. ATU-R transmits the message data in $FEXT_C$ symbols (see Figure C.10).

For ($N_{dmt} = 0, 1, \ldots, 344$)

$S = 272 \times N_{dmt} \bmod 2760$

if { (S > a) and (S + 271 < a + b) }	then $FEXT_C$ symbol
else	then $NEXT_C$ symbol

where a = 1315, b = 1293

IPR2025-00395
Petitioners' Exhibit 1012
Page 139 of 179

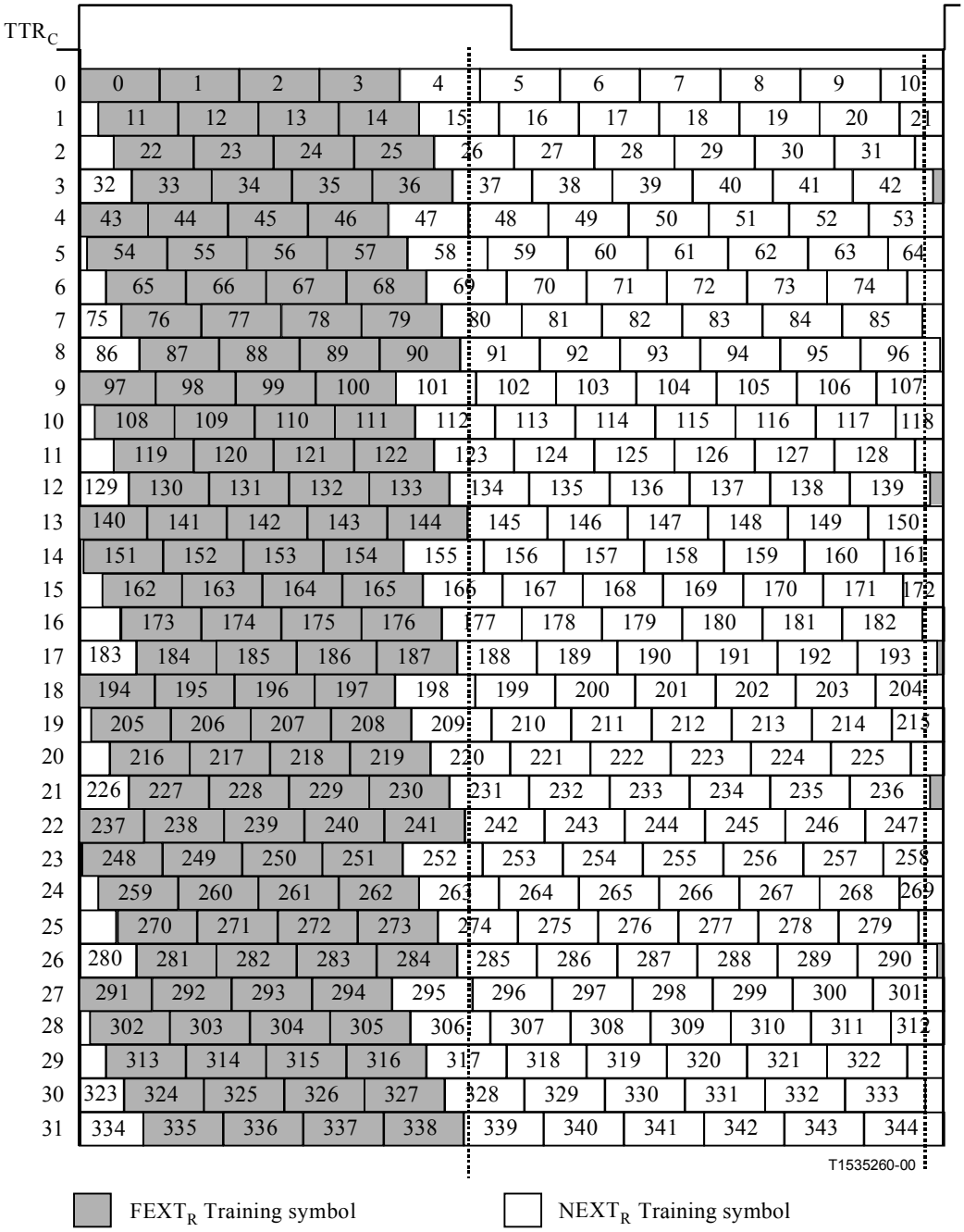

Figure C.11/G.992.2 – Symbol pattern in a hyperframe without cyclic prefix – Downstream

IPR2025-00395
Petitioners' Exhibit 1012
Page 140 of 179

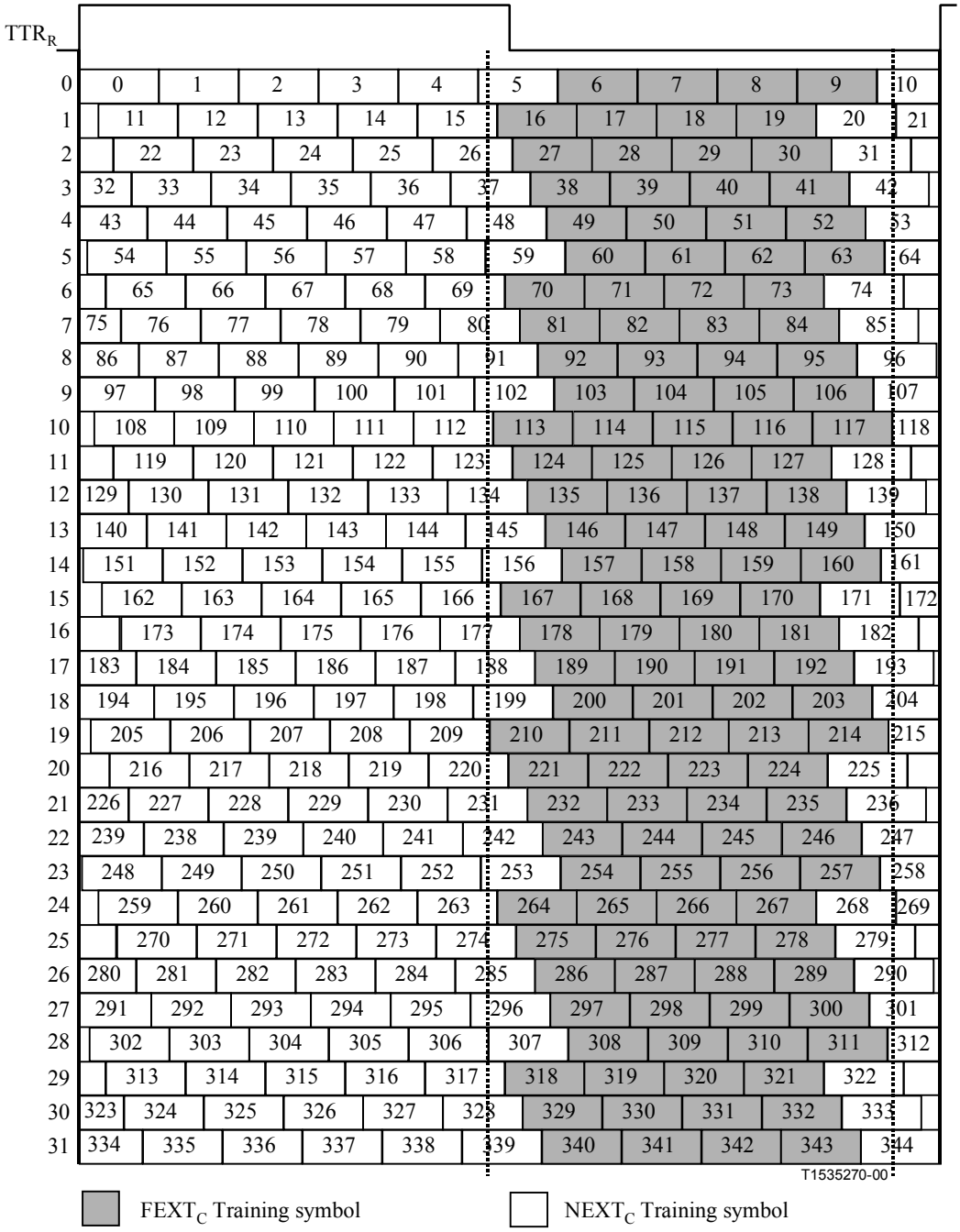

Figure C.12/G.992.2 – Symbol pattern in a hyperframe without cyclic prefix – Upstream

C.8.2 Escape from Handshake to Fast Retrain (replaces 11.5)

See Figure C.13.

C.8.2.1 C-QUIET-EF1 (replaces 11.5.1)

C-QUIET-EF1 begins at the termination of G.994.1. The minimum duration of C-QUIET-EF1 is 128 symbols. The maximum duration of C-QUIET-EF1 is 2048 symbols. The ATU-C terminates C-QUIET-EF1 and enters C-RECOV at the beginning of the hyperframe.

IPR2025-00395
Petitioners' Exhibit 1012
Page 141 of 179

C.8.2.2 R-QUIET-EF1 (replaces 11.5.2)

R-QUIET-EF1 begins at the termination of G.994.1. The minimum duration of R-QUIET-EF1 is 128 DMT symbols after the detection of C-RECOV. The ATU-R shall progress to R-RECOV only after it has detected any part of the C-RECOV signal that is needed for reliable detection. The ATU-R enters R-RECOV2 synchronized with the hyperframe after the synchronization of ADC clock with the received C-RECOV signal.

Time-outs C-TO2, R-TO1, R-TO3 are vendor discretionary. It is advisable to make these duration as short as possible.

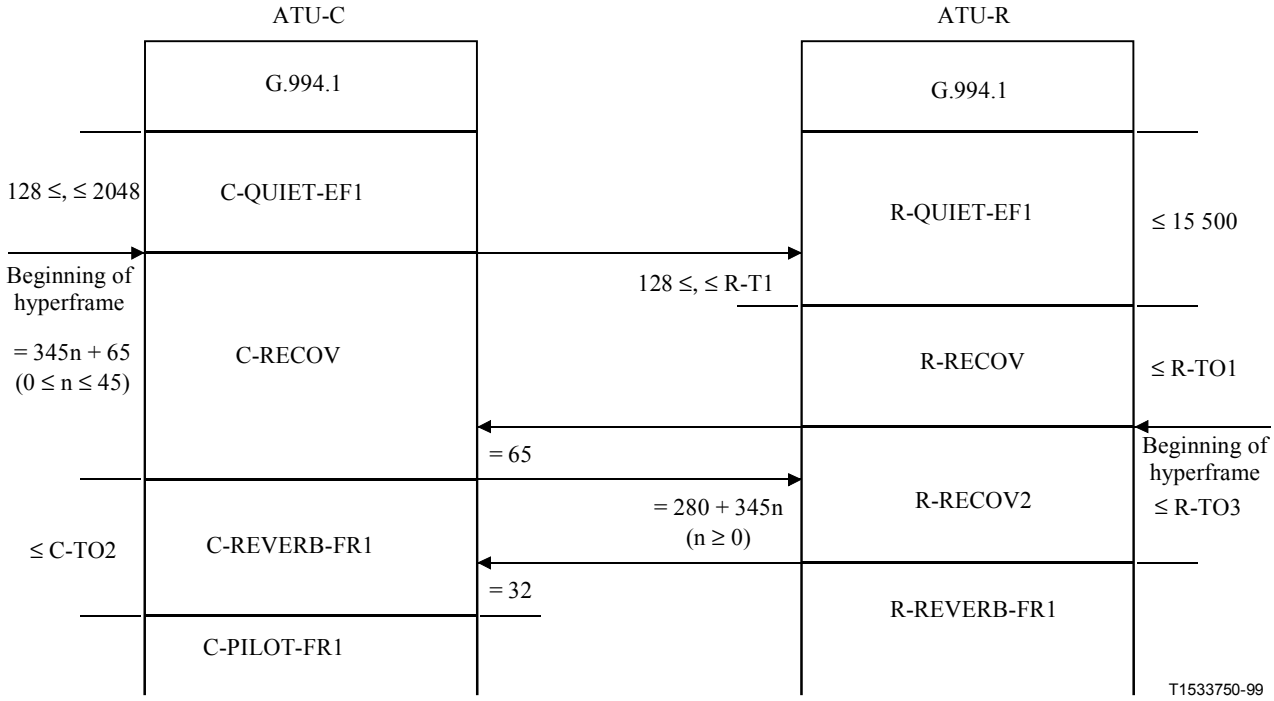

Figure C.13/G.992.2 – Timing diagram of Escape to Fast Retrain

C.8.3 Transceiver training – ATU-C (supplements 11.7)

During transceiver training from C-REVERB1 to C-SEGUE1 except C-PILOTn and C-QUIETn, the ATU-C shall transmit both $FEXT_R$ and $NEXT_R$ symbols when Bitmap-N_R is enabled (Dual Bitmap mode), and shall not transmit $NEXT_R$ symbols except the pilot tone when Bitmap-N_R is disabled (FEXT Bitmap mode). The duration of each state is defined in Figure C.18.

C.8.3.1 C-PILOT1 (supplements 11.7.2)

The ATU-C shall start its N_{SWF} counter immediately after entering C-PILOT1, and then increment the N_{SWF} counter with modulo 345 from 0 when it transmits each DMT symbol. According to the sliding window function and this counter, the ATU-C decides to transmit all of the subsequent symbols in either $FEXT_R$ or $NEXT_R$ symbols (see Figures C.11 and C.9).

C-PILOT1 has two subcarriers. One is the pilot tone as a single frequency sinusoid at 276 kHz (see 11.7.2).

IPR2025-00395
Petitioners' Exhibit 1012
Page 142 of 179

A second carrier (A_{48}: 48-th carrier) is used to transmit $NEXT_R/FEXT_R$ information. The ATU-R can detect the phase information of the TTR_C from the A_{48} signal. The constellation encoding of the 48-th carrier with 2-bit constellation shall be as the follows:

(+ , +); indicates a $FEXT_R$ symbol

(+ , –); indicates a $NEXT_R$ symbol

C.8.3.2 C-PILOT1A (supplements 11.7.3)

C-PILOT1A has two subcarriers and it is the same transmitted signal as C-PILOT1 (see C.8.3.1).

C.8.3.3 C-REVERB3 (supplements 11.7.11)

In order to synchronize the first symbol of C-RATES1 with the beginning of the hyperframe and to inform the entering timing of C-RATES1 to ATU-R, the first symbol of C-SEGUE1 shall be transmitted inside of the $FEXT_R$ duration. Therefore, the duration of C-REVERB3 is 3628 DMT symbols (see Figure C.14).

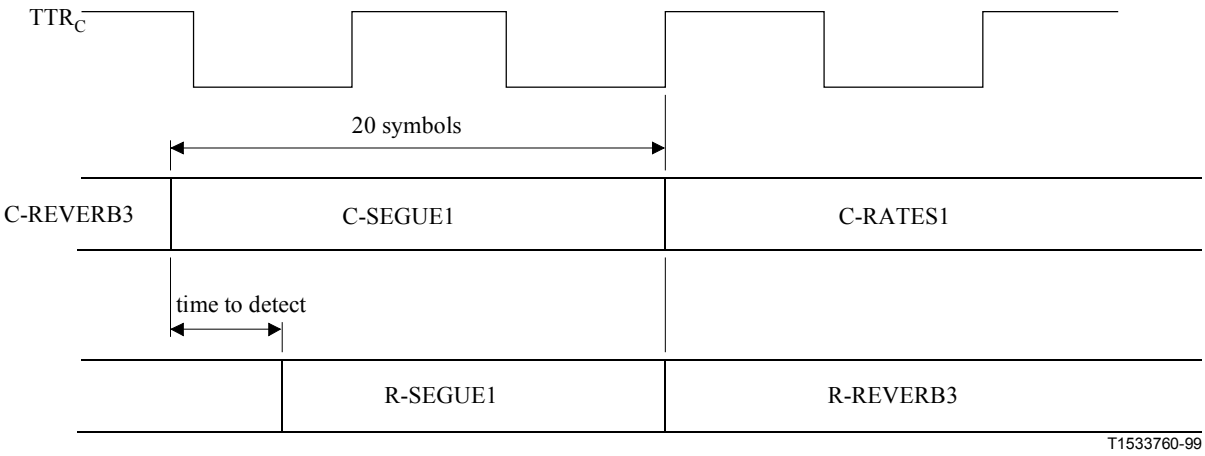

Figure C.14/G.992.2 – Timing diagram of C-SEGUE1 to C-RATES1

C.8.4 Transceiver training – ATU-R (supplements 11.8)

During transceiver training from R-REVERB1 to R-SEGUE1 except R-QUIETn, the ATU-R shall transmit both $FEXT_C$ and $NEXT_C$ symbols when Bitmap-N_C is enabled (Dual Bitmap mode) and shall not transmit $NEXT_C$ symbols when Bitmap-N_C is disabled (FEXT Bitmap mode). The duration of each state is defined in Figure C.18.

C.8.4.1 R-QUIET2 (supplements 11.8.1)

The ATU-R enters R-REVERB1 after it completes timing recovery and Hyperframe synchronization from C-PILOT1/C-PILOT1A.

C.8.4.2 R-REVERB1 (supplements 11.8.2)

The ATU-R shall start its N_{SWF} counter immediately after entering R-REVERB1, and then increment the N_{SWF} counter modulo 345 from 0 when it transmits each DMT symbol. The ATU-C and ATU-R shall have the same value since hyperframe alignment between the ATU-C and ATU-R shall be maintained. According to the sliding window and this counter, the ATU-R decides to transmit all of the subsequent symbols in either the $FEXT_C$ or the $NEXT_C$ symbol.

IPR2025-00395
Petitioners' Exhibit 1012
Page 143 of 179

C.8.4.3 R-QUIET3 (replaces 11.8.3)

The final symbol of R-QUIET3 accommodates the frame alignment of the transmitter to that of the receiver. It may be shortened by any number of samples. The maximum duration of R-QUIET3 is 6145 DMT symbols.

C.8.4.4 R-REVERB2 (supplements 11.8.5)

After ATU-R detects C-SEGUE1, the ATU-R enters R-SEGUE1. The maximum duration of R-REVERB2 is 3643 DMT symbols.

C.8.5 Channel analysis (ATU-C) (supplements 11.9)

The ATU-C shall transmit the $FEXT_R$ symbols, and shall not transmit the $NEXT_R$ symbols except the pilot tone from C-RATES1 to C-CRC2. In C-MEDLEY, ATU-C shall transmit both $FEXT_R$ and $NEXT_R$ symbols, when Bitmap-N_R is enabled (Dual Bitmap mode). ATU-C shall not transmit $NEXT_R$ symbols except pilot tone, when Bitmap-N_R is disabled (FEXT Bitmap mode). The duration of each state is defined in Figure C.18.

C.8.5.1 C-SEGUE1 (supplements 11.9.1)

The duration of C-SEGUE1 is 20 symbols in order that the first symbol of C-SEGUE1 shall be inside of the $FEXT_R$ duration (see Figure C.14).

C.8.5.2 C-MEDLEY (supplements 11.9.6)

The definition of C-MEDLEY is the same as in 11.9.6, except for the duration of the SNR estimation at ATU-R for the downstream. With the periodical noise of TCM- ISDN, the SNR also changes in the same cycle, as shown in Figure C.15. ATU-C transmits the signal in both of $FEXT_R$ and $NEXT_R$ symbols and ATU-R estimates two SNRs from the received $NEXT_R$ and $FEXT_R$ symbols, respectively, as defined in Figure C.16.

The following numerical formula gives the information that received N_{dmt}-th DMT symbol at ATU-R belongs to:

For (N_{dmt} = 0, 1, …, 344)

$S = 272 \times N_{dmt} \bmod 2760$

if { (S + 271 < a) or (S > d) } then symbol for estimation of $FEXT_R$ SNR

if { (S > b) and (S + 271 < c) } then symbol for estimation of $NEXT_R$ SNR

where a = 1243, b = 1403, c = 2613, d = 2704

When Bitmap-N_R is disabled (FEXT Bitmap mode), ATU-C shall transmit only the pilot tone as $NEXT_R$ symbol.

IPR2025-00395
Petitioners' Exhibit 1012
Page 144 of 179

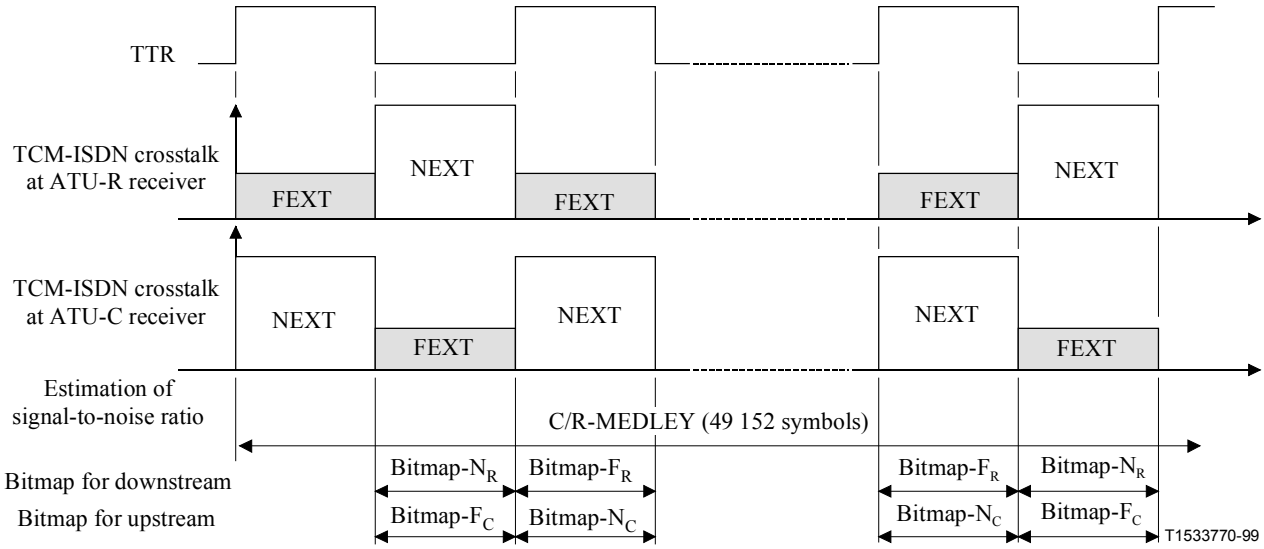

Figure C.15/G.992.2 – Estimation of periodic Signal-to-Noise Ratio

IPR2025-00395
Petitioners' Exhibit 1012
Page 145 of 179

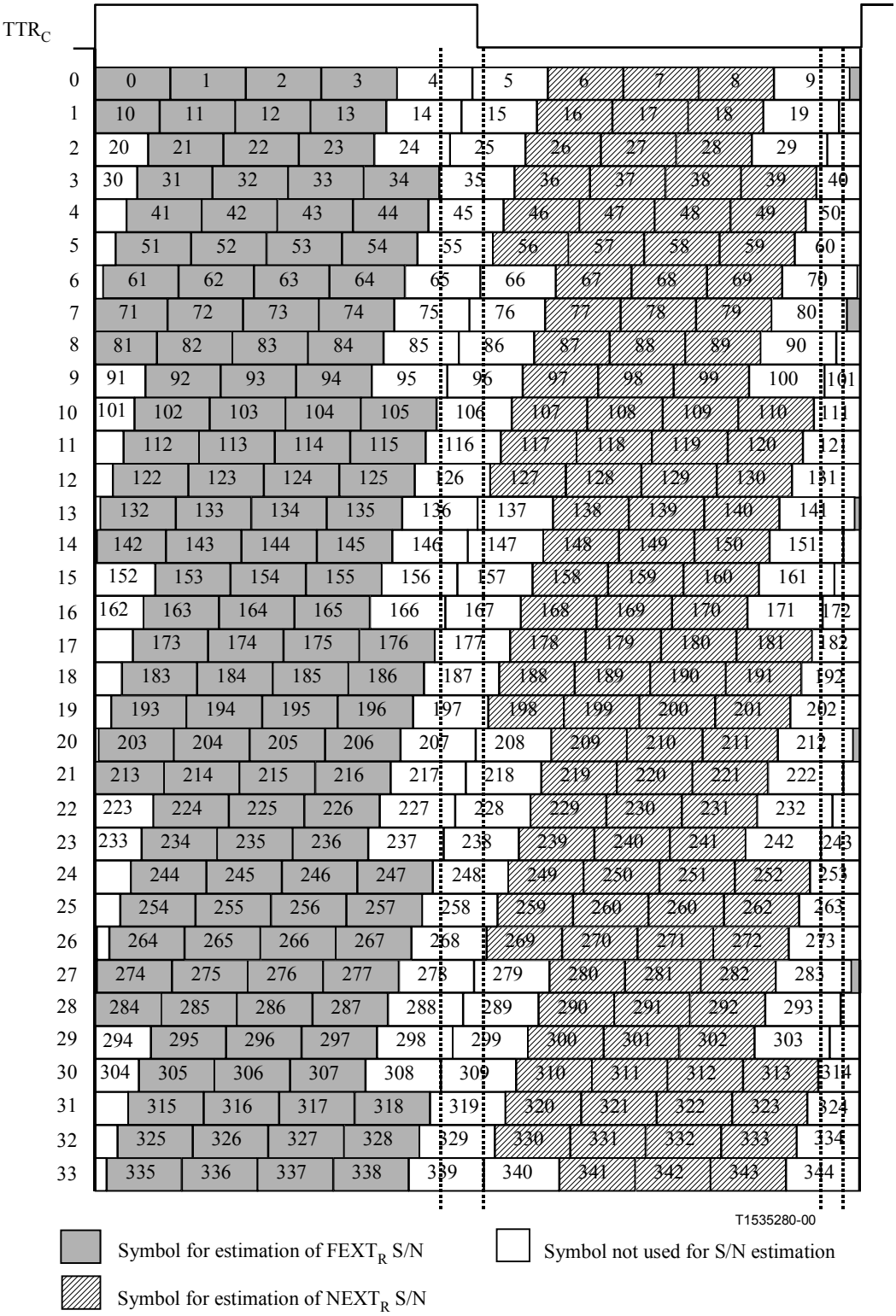

Figure C.16/G.992.2 – Symbol pattern in a hyperframe for S/N estimation – Downstream

C.8.6 Channel analysis (ATU-R) (supplements 11.10)

From R-RATES1 to R-CRC2, the ATU-R shall transmit the FEXT$_C$ symbols and shall not transmit the NEXT$_C$ symbols. In R-SEGUE2 and R-MEDLEY, the ATU-R shall transmit both FEXT$_C$ and NEXT$_C$ symbols when Bitmap-N$_C$ is enabled (Dual Bitmap mode) and shall not transmit NEXT$_C$

IPR2025-00395
Petitioners' Exhibit 1012
Page 146 of 179

symbols when Bitmap-N_C is disabled (FEXT Bitmap mode). The duration of each state is defined in Figure C.18.

C.8.6.1 R-SEGUE1 (supplements 11.10.1)

The maximum duration of R-SEGUE1 is 14 symbols (see Figure C.14).

C.8.6.2 R-REVERB3 (supplements 11.10.2)

The ATU-R shall start R-REVERB3 aligned with the beginning of a Hyperframe.

C.8.6.3 R-SEGUE2 (supplements 11.10.3)

The duration of R-SEGUE2 is 13 symbols.

C.8.6.4 R-MEDLEY (supplements 11.10.8)

The definition of R-MEDLEY is the same as in 11.10.8, except for the duration of the SNR estimation at the ATU-C for the upstream channel. With the periodic noise of TCM- ISDN, the SNR also changes in the same cycle, as shown in Figure C.15. The ATU-R shall transmit the signal in both of $FEXT_C$ and $NEXT_C$ symbols, and ATU-C shall estimate two SNRs from the received $NEXT_C$ and $FEXT_C$ symbols, respectively, as defined in Figure C.17.

The following numerical formula gives the information that received N_{dmt}-th DMT symbol at ATU-C belongs to:

For $N_{dmt} = 0, 1, \ldots, 344$

$S = 272 \times N_{dmt} \bmod 2760$

if { (S > b) and (S + 271 < c) } then symbol for estimation of $FEXT_C$ SNR

if { (S + 271< a) } then symbol for estimation of $NEXT_C$ SNR

where a = 1148, b = 1315, c = 2608

When Bitmap-N_C is disabled (FEXT Bitmap mode), ATU-R shall not transmit $NEXT_C$ symbol.

IPR2025-00395
Petitioners' Exhibit 1012
Page 147 of 179

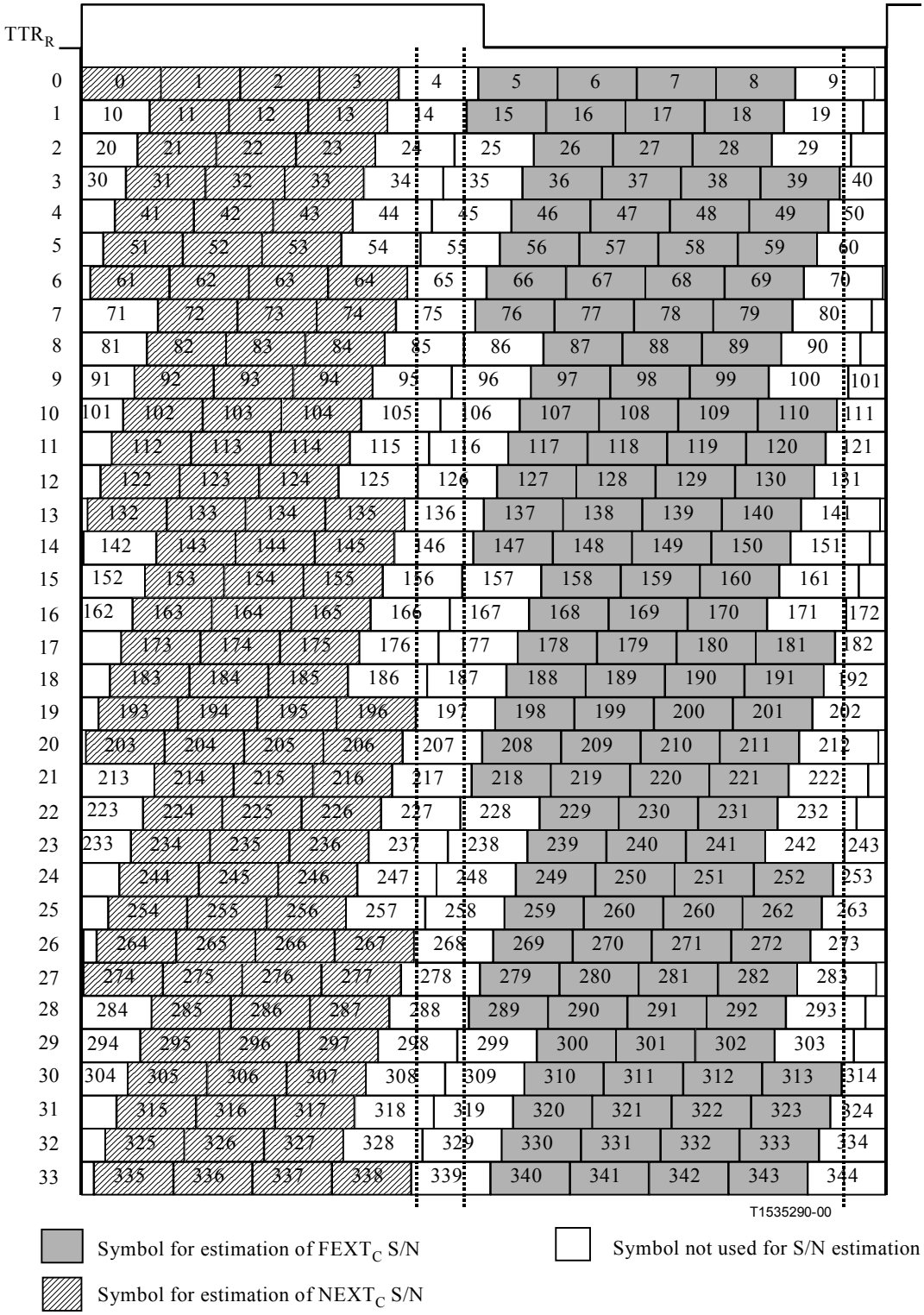

Figure C.17/G.992.2 – Symbol pattern in a hyperframe for S/N estimation – Upstream

C.8.7 Exchange – ATU-C (supplements 11.11)

During C-RATESn, C-MSGn, C-B&G, and C-CRCn, the ATU-C shall transmit the $FEXT_R$ symbol. In the other signals, the ATU-C shall transmit both $FEXT_R$ and $NEXT_R$ symbols when Bitmap-N_R is enabled (Dual Bitmap mode), and shall not transmit the $NEXT_R$ symbols except pilot tone when Bitmap-N_R is disabled (FEXT Bitmap mode).The duration of each state is defined in Figure C.19.

IPR2025-00395
Petitioners' Exhibit 1012
Page 148 of 179

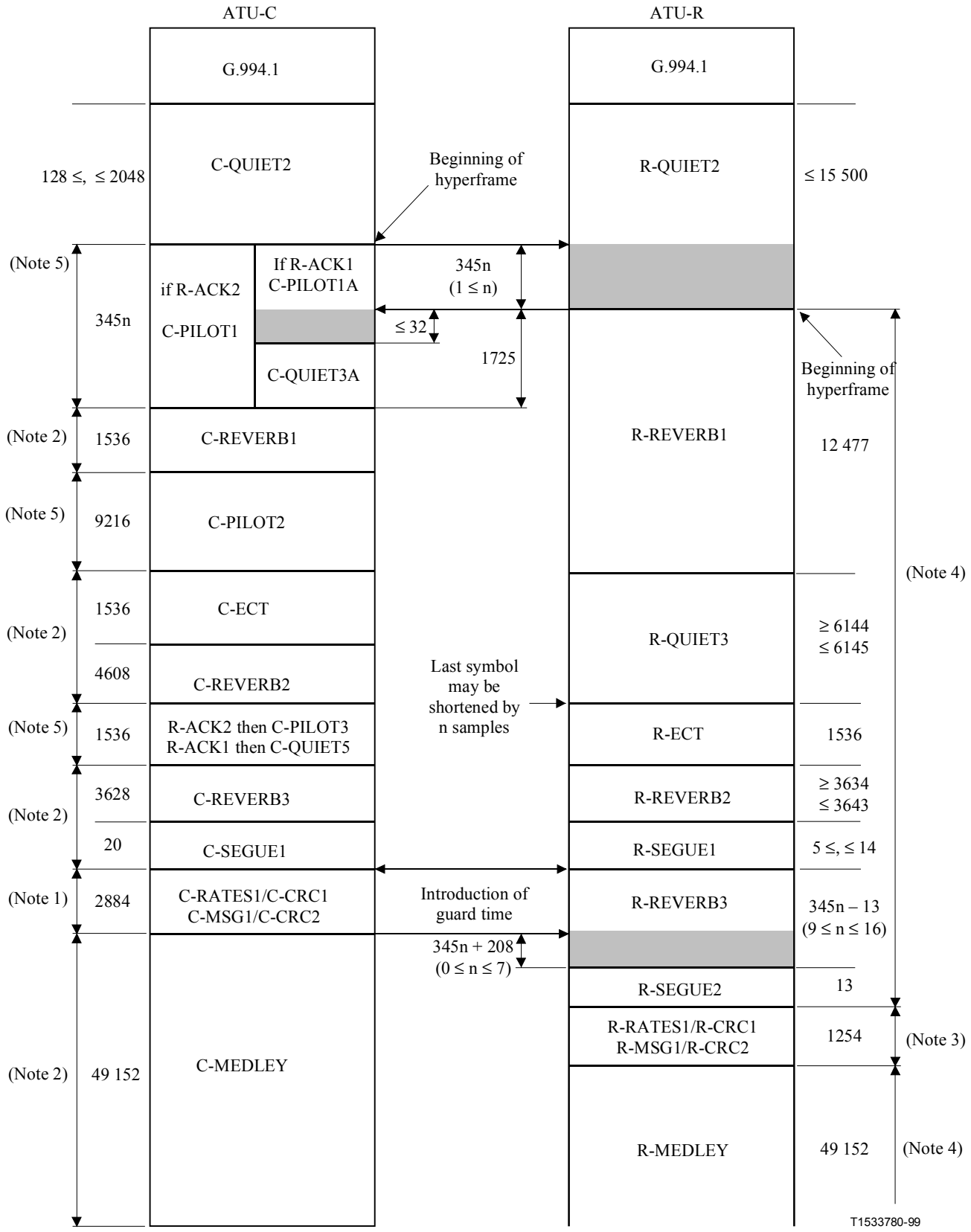

Figure C.18/G.992.2 – Timing diagram of the initialization sequence *(part 1)*

IPR2025-00395
Petitioners' Exhibit 1012
Page 149 of 179

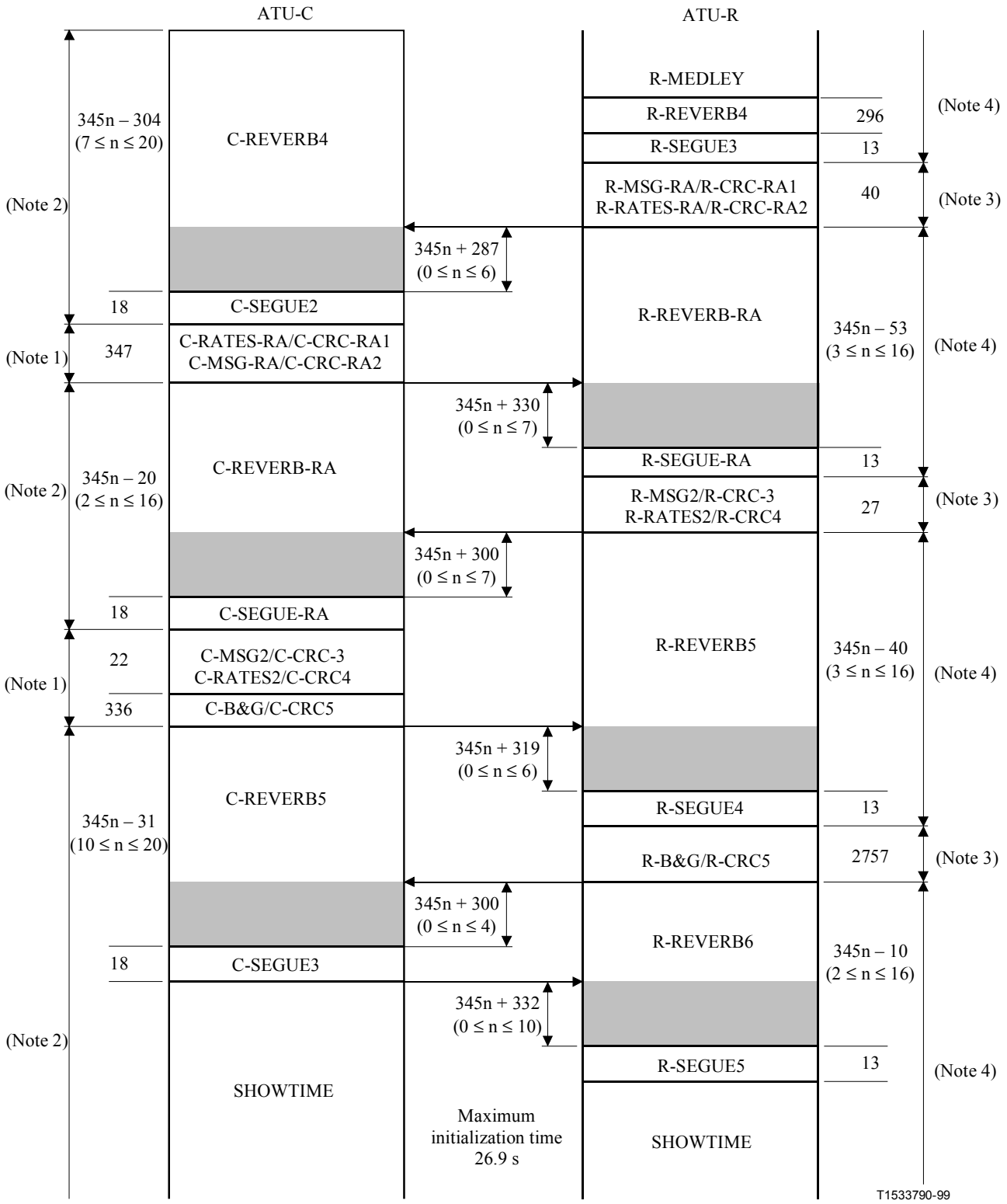

Figure C.19/G.992.2 – Timing diagram of the initialization sequence *(part 2)*

Notes to Figures C.18 and C.19

NOTE 1 – The ATU-C shall transmit the $FEXT_R$ symbols, and shall not transmit the $NEXT_R$ symbols except pilot tone.

NOTE 2 – The ATU-C shall transmit both $FEXT_R$ and $NEXT_R$ symbols, when Bitmap-N_R is enabled (Dual Bitmap mode). ATU-C shall not transmit the $NEXT_R$ symbols except pilot tone, when Bitmap-N_R is disabled (FEXT Bitmap mode).

IPR2025-00395
Petitioners' Exhibit 1012
Page 150 of 179

NOTE 3 – ATU-R shall transmit the $FEXT_C$ symbols, and shall not transmit the $NEXT_C$ symbols.

NOTE 4 – ATU-R shall transmit both $FEXT_C$ and $NEXT_C$ symbols, when Bitmap-N_C is enabled (Dual Bitmap mode). ATU-R shall not transmit $NEXT_C$ symbols, when Bitmap-N_C is disabled (FEXT Bitmap mode).

NOTE 5 – ATU-C shall transmit both $FEXT_R$ and $NEXT_R$ symbols.

C.8.7.1 C-MSG2 (supplements to 11.11.9)

C.8.7.1.1 Total number of bits per symbol supported (supplements 11.11.9.4)

The maximum number of bits per symbol is defined at the reference point B, that is calculated from the $FEXT_C$ and $NEXT_C$ upstream channel performance. (E.g. if the maximum numbers of bits that can be supported in $FEXT_C$ and $NEXT_C$ symbols are 111 and 88, {Total number of bits per symbol supported} = (111 × 126 + 88 × 214)/340 = 96).

The number of symbols per hyperframe is 340. The number of FEXT symbols per hyperframe is 126. The number of NEXT symbols per hyperframe is 214.

C.8.7.2 C-B&G (replaces 11.11.13)

C-B&G shall be used to transmit to the ATU-R the bits and gains information, Bitmap-F_C $\{b_1, g_1, b_2, g_2, \ldots b_{31}, g_{31}\}$, and Bitmap-$N_C$ $\{b_{33}, g_{33}, b_{34}, g_{34}, \ldots b_{63}, g_{63}\}$, that are to be used on the upstream carriers. b_i of Bitmap-F_C indicates the number of bits to be coded by ATU-R transmitter onto the i-th upstream carrier in $FEXT_C$ symbols; g_i of Bitmap-F_C indicates the scale factor, relative to the gain that was used for that carrier during the transmission of R-MEDLEY, that shall be applied to the i-th upstream carrier in $FEXT_C$ symbols. Similarly, b_i of Bitmap-N_C indicates the number of bits onto the $(i – 32)$-th upstream carrier in $NEXT_C$ symbols; g_i of Bitmap-N_C indicates the scale factor that shall be applied to the $(i – 32)$-th upstream carrier in $NEXT_C$ symbols.

Because no bits or energy will be transmitted at dc or one-half the sampling rate, b_0, g_0, b_{32}, g_{32}, b_{64}, and g_{64} are all presumed to be zero and shall not be transmitted.

The C-B&G information shall be mapped in a 992-bit (124 byte) message m defined by:

$$m = \{m_{991}, m_{990}, \ldots, m_1, m_0\} = \{g_{63}, b_{63}, \ldots g_{33}, b_{33}, g_{31}, b_{31}, \ldots g_1, b_1\},$$

with the MSB of b_i and g_i in the higher m index and m_0 being transmitted first. The message m shall be transmitted in 124 symbols, using the transmission method as described in 11.11.9.

When Bitmap-N_C is disabled (FEXT Bitmap mode), b_i and g_i of Bitmap-N_C shall be set to zero.

C.8.7.3 C-SEGUE3 (supplements 11.11.16)

The duration of C-SEGUE3 is 18 symbols. Following C-SEGUE-3, ATU-C completes the initialization and enters C-SHOWTIME. In C-SHOWTIME, ATU-C shall transmit the signal using Bitmap-F_R and Bitmap-N_R with the sliding window.

C.8.8 Exchange – ATU-R (supplements 11.12)

The ATU-R shall transmit only the $FEXT_C$ symbols in R-MSGn, R-RATESn, R-B&G, R-CRCn. In other signals, the ATU-R shall transmit both $FEXT_C$ and $NEXT_C$ symbols when Bitmap-N_C is enabled (Dual Bitmap mode) and shall not transmit $NEXT_C$ symbols when Bitmap-N_C is disabled (FEXT Bitmap mode).The duration of each state is defined in Figure C.19.

IPR2025-00395
Petitioners' Exhibit 1012
Page 151 of 179

C.8.8.1 R-MSG-RA (related to 11.12.2)

C.8.8.1.1 Total number of bits supported (B_{max}) (replaces 11.12.2.7)

This parameter shall be defined as in R-MSG2; see C.8.8.2.

C.8.8.2 R-MSG2 (supplements 11.12.8)

C.8.8.2.1 Total number of bits per symbol supported (supplements 11.12.8.4)

The maximum number of bits per symbol is defined at the reference point B, that is calculated from the $FEXT_R$ and $NEXT_R$ downstream channel performance.

C.8.8.3 R-B&G (replaces 11.12.14)

The purpose of R-B&G is to transmit to ATU-C the bits and gains information, Bitmap-F_R $\{b_1, g_1, b_2, g_2, \ldots b_{255}, g_{255}\}$, and Bitmap-$N_R$ $\{b_{257}, g_{257}, b_{258}, g_{258}, \ldots b_{511}, g_{511}\}$, to be used on the downstream subcarriers. b_i of Bitmap-F_R indicates the number of bits to be coded by ATU-C transmitter onto the i-th downstream subcarrier in $FEXT_R$ symbols; g_i of Bitmap-F_R indicates the scale factor that shall be applied to the i-th downstream subcarrier in $FEXT_R$ symbols, relative to the gain that was used for that carrier during the transmission of C-MEDLEY. Similarly, b_i of Bitmap-N_R indicates the number of bits onto the $(i - 256)$-th downstream carrier in $NEXT_R$ symbols; g_i of Bitmap-N_R indicates the scale factor that shall be applied to the $(i - 256)$-th downstream carrier in $NEXT_R$ symbols. Because no bits or energy will be transmitted at DC or one-half the sampling rate, b_0, g_0, b_{256}, g_{256}, b_{512}, and g_{512} are all presumed to be zero, and are not transmitted. Because subcarrier 64 is reserved as the pilot tone, b_{64} and b_{320}, shall be set to 0_b, g_{64} and g_{320} shall be set to g_{sync}. The value g_{sync} represents the gain scaling applied to the sync symbol.

The R-B&G information shall be mapped in a 8160-bit (1020 byte) message m defined by:

$$m = \{m_{8159}, m_{8158}, \ldots, m_1, m_0\} = \{g_{511}, b_{511}, \ldots g_{257}, b_{257}, g_{255}, b_{255}, \ldots g_1, b_1\},$$

with the MSB of b_i and g_i in the higher m index and m_0 being transmitted first. The message m shall be transmitted in 1020 symbols, using the transmission method as described in 11.12.8.

Values of b_i and g_i shall be set to 0 for values of $127 < I < 256$, and $383 < i < 512$.

When Bitmap-N_R is disabled (FEXT Bitmap mode), b_i and g_i of Bitmap-N_R shall be set to zero.

C.8.8.4 R-SEGUE5 (replaces 11.12.17)

The duration of R-SEGUE5 is 13 symbols. Following R-SEGUE-5, ATU-R completes the initialization and enters R-SHOWTIME. In R-SHOWTIME, ATU-R shall transmit the signal using Bitmap-F_C and Bitmap-N_C with the sliding window.

C.9 Fast retraining (supplements clause 12)

The definition of Fast Retrain procedure is the same as main body except for the definition of C-RECOV, the introduction of R-RECOV2, and duration of symbols which includes the Sliding Window operation. The definition of C-RECOV and R-RECOV2 are defined in C.9.2. The duration of each state is defined in Figure C.22.

IPR2025-00395
Petitioners' Exhibit 1012
Page 152 of 179

C.9.1 Fast Retrain overview (pertains to 12.1)

C.9.1.1 Profile requirement (supplements 12.1.1)

B&G tables of profile contain both Bitmap-F_R and Bitmap-N_R in the ATU-C, and both Bitmap-F_C and Bitmap-N_C in the ATU-R.

C.9.2 Definition of Fast Retrain signals (supplements 12.2)

C-RECOV signal is changed and the signal R-RECOV2 is added.

- C-RECOV consists of a single tone signal corresponding to subcarrier 68 without cyclic prefix accompanied by the C-PILOT1 signal which contains subcarrier 64 and 48 (see C.8.3.1). ATU-C shall transmit the signal which includes 64, 68 and 48th subcarrier as $FEXT_R$ symbol, and shall transmit the signal which includes 64 and 48th subcarrier as $NEXT_R$ symbol. This signal allows the ATU-R to perform or maintain timing recovery and hyperframe synchronization.
- R-RECOV2 is single tone signal corresponding to subcarrier 22 without cyclic prefix. The PSD level to be used for R-RECOV2 shall be the same as R-RECOV. ATU-R transmits R-RECOV2 both $FEXT_R$ and $NEXT_R$ symbols.

C.9.3 Fast Retrain procedure (supplements 12.3)

C.9.3.1 ATU-C initiated from SHOWTIME (supplements 12.3.1)

Figures C.20 and C.21 show the timing diagrams for the Fast Retrain with the ATU-C initiating the procedure.

Time-outs C-TO2, C-TO3, R-TO1, R-TO3 are vendor discretionary. It is advisable to make these durations as short as possible.

The following issues are different from main body and transition state timing is similar to initialization (see C.8).

- The ATU-C shall enter C-RECOV at the beginning of the hyperframe without cyclic prefix.
- The ATU-C shall transmit the pilot tone as the $NEXT_R$ symbols in C-MSG-n and C-CRC-n.
- When Bitmap-N_R is disabled (FEXT Bitmap mode) in preceding SHOWTIME, the ATU-C shall transmit the pilot tone as $NEXT_R$ symbols, except C-RECOV and C-QUIET-FR.
- The ATU-C enters C-MEDLEY-FR at the beginning of the hyperframe with cyclic prefix.
- The ATU-R shall enter R-RECOV2 at the beginning of the hyperframe without cyclic prefix after the synchronization of ADC clock with the received C-RECOV signal. Last symbol of R-RECOV may be shortened.
- The ATU-R shall not transmit any signal as the $NEXT_C$ symbols in R-MSG-n and R-CRC-n.
- When Bitmap-N_C is disabled (FEXT Bitmap mode) in preceding SHOWTIME, the ATU-R shall not transmit the $NEXT_C$ symbols, except R-RECOV and R-RECOV2.
- The ATU-R enters R-MEDLEY-FR at the beginning of the hyperframe with cyclic prefix.

C.9.3.2 ATU-R initiated from SHOWTIME (supplements 12.3.2)

Figure C.22 shows the timing diagram for the Fast Retrain with the ATU-R initiating the procedure.

Time-outs C-TO2, R-TO2, R-TO3 are vendor discretionary. It is advisable to make these durations as short as possible.

IPR2025-00395
Petitioners' Exhibit 1012
Page 153 of 179

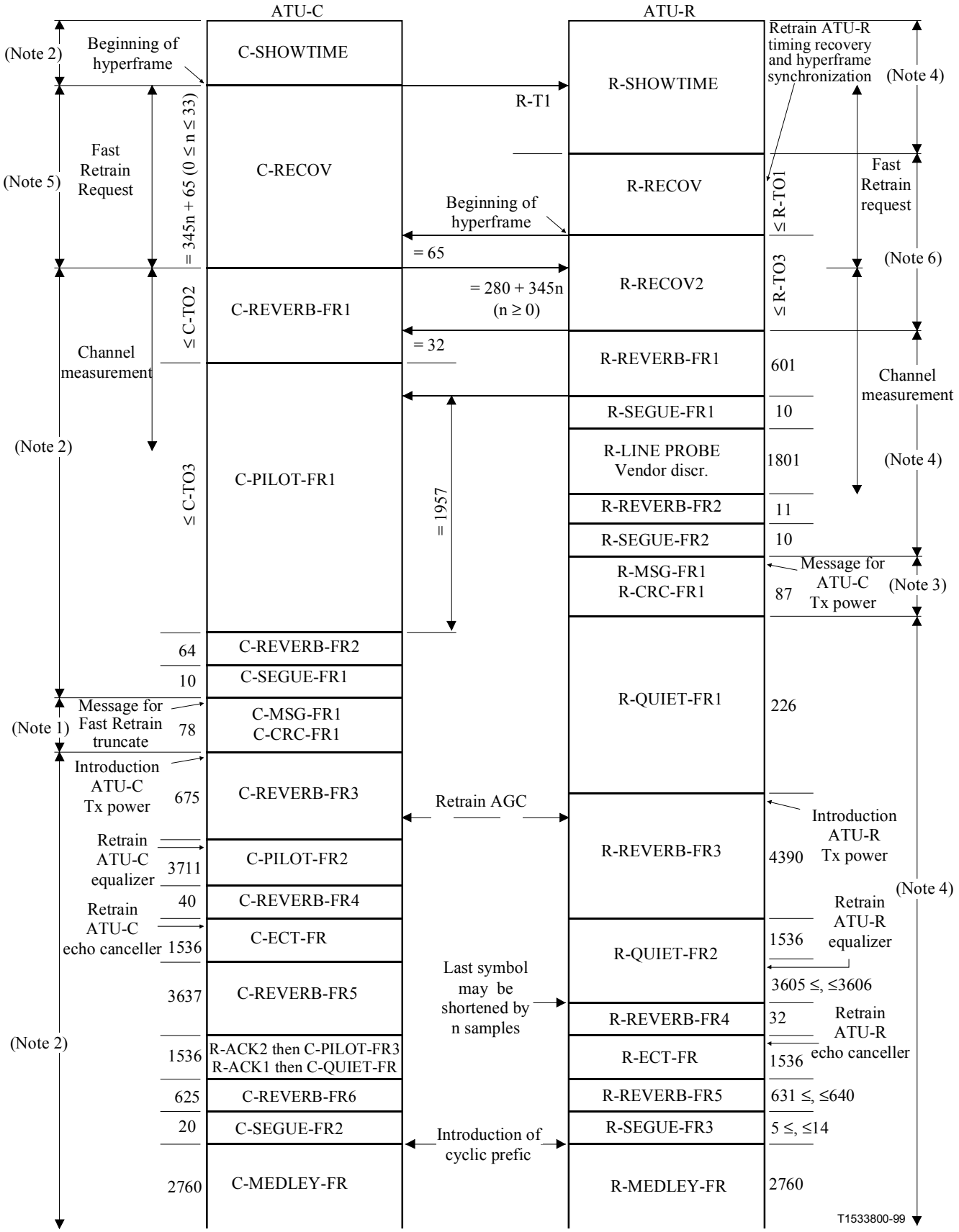

Figure C.20/G.992.2 – Timing diagram of the Fast Retrain procedure, ATU-C initiated from SHOWTIME *(part 1)*

IPR2025-00395
Petitioners' Exhibit 1012
Page 154 of 179

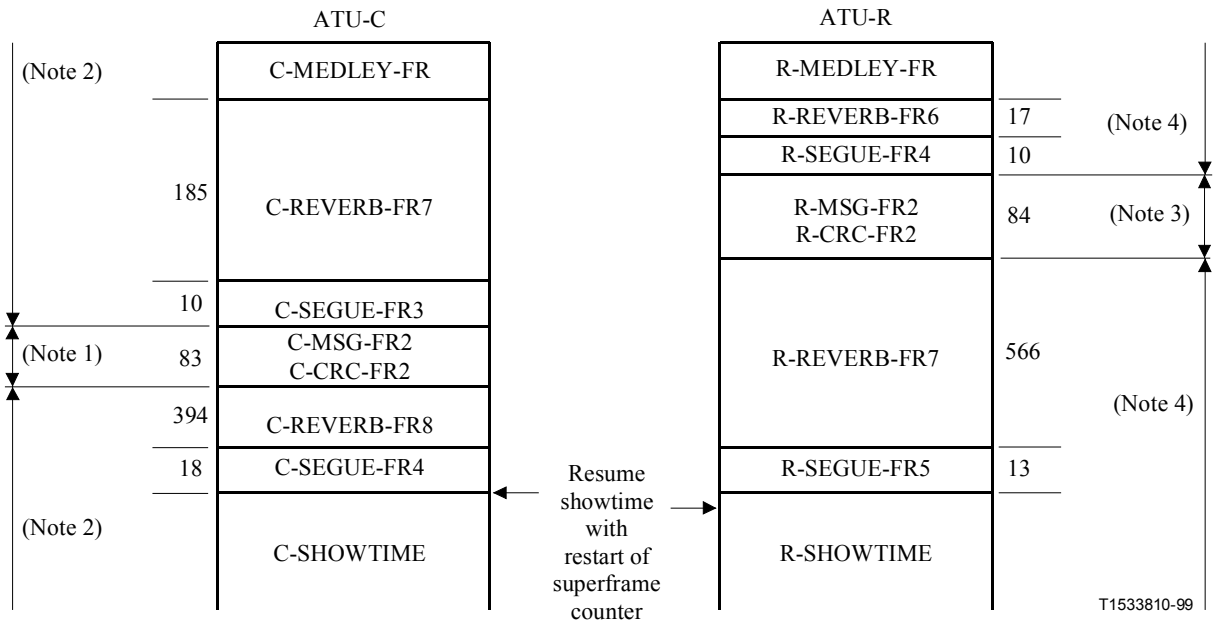

Figure C.21/G.992.2 – Timing diagram of the Fast Retrain procedure, ATU-C initiated from SHOWTIME *(part 2)*

IPR2025-00395
Petitioners' Exhibit 1012
Page 155 of 179

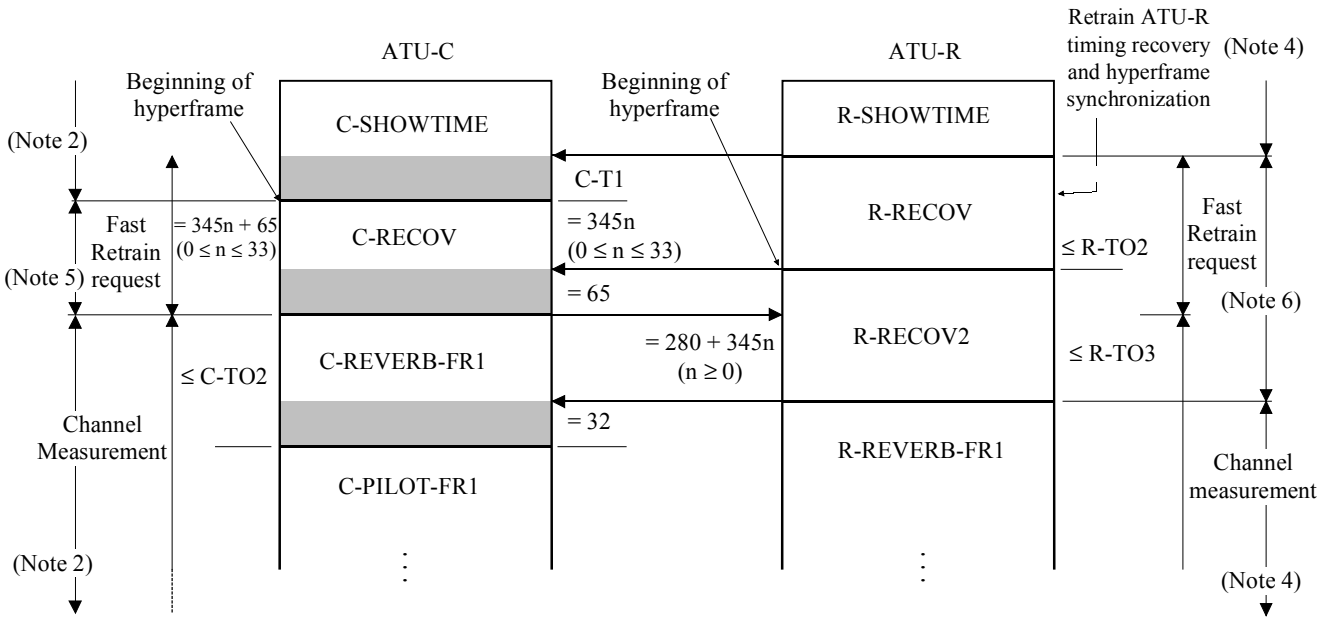

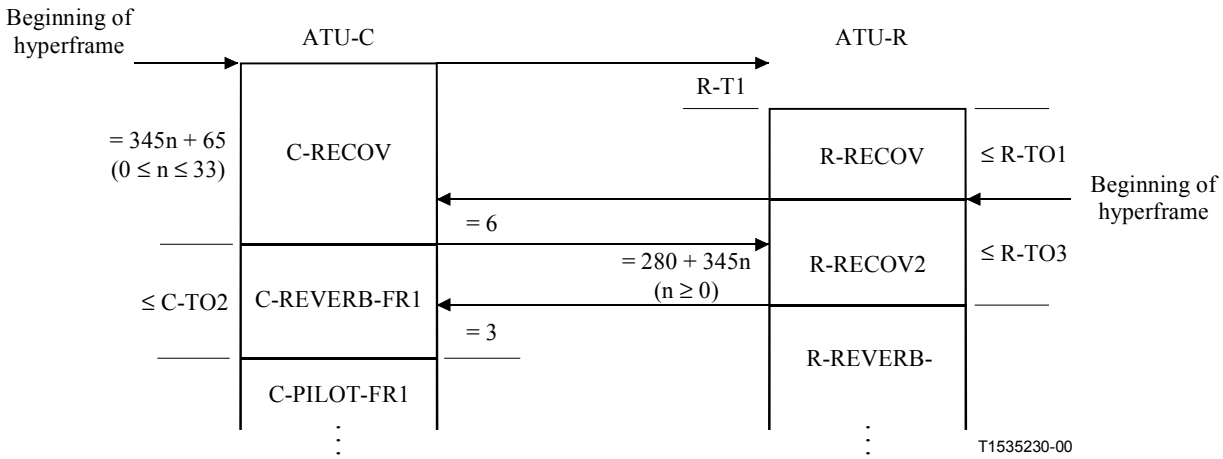

Figure C.22/G.992.2 – Timing diagram of the Fast Retraining procedure, ATU-R initiated from SHOWTIME

Notes to Figures C.21 and C.22

NOTE 1 – ATU-C shall transmit the $FEXT_R$ symbols, and shall not transmit the $NEXT_R$ symbols except pilot tone.

NOTE 2 – ATU-C shall transmit both $FEXT_R$ and $NEXT_R$ symbols, when Bitmap-N_R is enabled (Dual Bitmap mode). ATU-C shall not transmit the $NEXT_R$ symbols except pilot tone, when Bitmap-N_R is disabled (FEXT Bitmap mode).

NOTE 3 – ATU-R shall transmit the $FEXT_C$ symbols, and shall not transmit the $NEXT_C$ symbols.

NOTE 4 – ATU-R shall transmit both $FEXT_C$ and $NEXT_C$ symbols, when Bitmap-N_C is enabled (Dual bitmap mode). ATU-R shall not transmit $NEXT_C$ symbols, when Bitmap-N_C is disabled (FEXT Bitmap mode).

NOTE 5 – ATU-C shall transmit both $FEXT_R$ and $NEXT_R$ symbols. However, the transmission signal is different between $FEXT_R$ and $NEXT_R$ symbol (see C.9.2).

NOTE 6 – ATU-R shall transmit both $FEXT_C$ and $NEXT_C$ symbols.

IPR2025-00395
Petitioners' Exhibit 1012
Page 156 of 179

C.9.4 Initiated from L3 or Recommendation G.994.1 (replaces 12.5)

A Fast Retrain Procedure initiated from an idle link state or via an Escape from Handshake shall be according to C.9.3.1 or C.9.3.2 except for a longer time duration for R-TO1 or R-TO2 of the R-RECOV signal. This will allow for re-acquisition of loop timing and hyperframe synchronization with the received C-RECOV signal at the ATU-R.

C.10 Power management (pertains to clause 13)

C.10.1 Transition from L0 to L1 (T0d) (pertains to 13.4.2)

C.10.1.1 Exchange entry procedure (replaces 13.4.2.1)

This subclause defines the Exchange entry procedure. This procedure reuses states, signals, and rules for determining the next state contained within C.8.6 as defined in the following steps.

1) After successful termination of the eoc handshake procedure, the ATU-R shall start R-QUIET-PM at the Hyperframe boundary. R-QUIET-PM is defined as no transmitted signal onto the U-R interface. The ATU-R shall maintain loop timing and Hyperframe synchronization during the R-QUIET-PM signal.
2) After the detection of R-QUIET-PM, the ATU-C shall start C-REVERB4 at next 287th symbol (frame 286) of the hyperframe. In this procedure, the duration of C-REVERB4 is $345n - 304$ ($3 \le n \le 9$).
3) After the detection of C-REVERB4, the ATU-R responds by sending R-REVERB4 at next 37th symbol (frame 36) of the hyperframe. The exchange portion of the initialization procedure defined in C.8.6 shall continue from this point (i.e. the ATU-R shall send R-SEGUE after 296 symbols of R-REVERB4). During R-MSG-RA, the ATU-R shall use the "no options selected" message. The ATU-C implementation shall include a means that blocks the loss of signal defect during exchange entry procedure.

ANNEX D

System performance for North America

D.1 System performance for North America

All test cases specified in this annex shall be used for the main body of this Recommendation and testing shall conform to the following:

- No power cutback on upstream transmitter.
- Margin = 4 dB.
- BER = 10^{-7}.
- Background noise = –140 dBm/Hz.
- Data rates, except where noted, are to be measured in the absence of a customer premises wiring.
- Data rates listed are the net payload data rate. (ATM cell overhead is included within the listed bit rates, but framing, eoc, and RS code overheads are not included within the listed bit rates.)
- For testing purposes, one-way payload transfer delay shall be less that $10 + (S \times D)/4$ ms.
- Loop environmental temperature = 25° C.

A Recommendation G.992.2 Annex D compliant system (ATU-C and ATU-R) shall meet the following minimum performance requirements:

IPR2025-00395
Petitioners' Exhibit 1012
Page 157 of 179

D.1.1 Required test cases

Table D.1/G.992.2 – Required test cases

Case #	Loop	Downstream net data rate	Upstream net data rate	Noise
1	Null Loop	1536 kbit/s	512 kbit/s	None
2	T #7	1536 kbit/s	224 kbit/s	49 Annex A/G.992.2
3	T #7	1536 kbit/s	224 kbit/s	24 DSL
4	T #13	1184 kbit/s	224 kbit/s	49 Annex A/G.992.2
5	T #13	1184 kbit/s	224 kbit/s	24 DSL
6	Shortened T #7	1184 kbit/s	256 kbit/s	10 HDSL
7	Shortened T #7	512 kbit/s	512 kbit/s	5 adjacent binder T1
8	T #8	256 kbit/s	96 kbit/s	24 Annex A/G.992.2
9	T #8	256 kbit/s	96 kbit/s	10 DSL
10	T #13 In-home wiring model #1 G.996.1	768 kbit/s	192 kbit/s	49 Annex A/G.992.2
11	T #13 In-home wiring model #1 G.996.1	768 kbit/s	192 kbit/s	24 DSL

In addition to the above loops, a Recommendation G.992.2 Annex D compliant system (ATU-C and ATU-R) should meet the following performance points in order to provide extended loop reach.

D.1.2 Extended reach cases

For the extended reach test cases #12 and #13 margin testing shall be performed without the check that the ADSL unit can train at the 4 dB margin level.

Table D.2/G.992.2 – Extended reach test cases

Case #	Loop	Downstream net data rate	Upstream net data rate	Noise
12	T #1	256 kbit/s	96 kbit/s	3 Annex A/G.992.2
13	T #2	256 kbit/s	96 kbit/s	24 Annex A/G.992.2
14	T #5	768 kbit/s	256 kbit/s	49 Annex A/G.992.2
15	T #5	768 kbit/s	256 kbit/s	24 DSL
16	T #9	1536 kbit/s	256 kbit/s	49 Annex A/G.992.2
17	T #9	1536 kbit/s	256 kbit/s	24 DSL
18	Shortened T #7	1536 kbit/s	256 kbit/s	24 HDSL

NOTE 1 – A goal of future enhancements of this Recommendation is to make the "Extended Reach Cases" mandatory.

NOTE 2 – Performance levels do not reflect the effect of customer premise wiring, which is expected to reduce data rate.

IPR2025-00395
Petitioners' Exhibit 1012
Page 158 of 179

ANNEX E

System performance for Europe

E.1 System performance for Europe

This annex specifies European performance requirements for this Recommendation over short, medium and long loops without inclusion of premises wiring or phone models.

The one-way payload transfer delay shall be below 10 + (S × D)/4 ms for the ADSL Line (excluding ATM TC).

The performance points in Table E.1 must be met with a BER of 10^{-7} at 6 dB margin. The ATU-C and ATU-R shall be connected directly via the specified loop (no home network or phone model present).

Table E.1/G.992.2 – Proposed European required Test Loops and Performance Targets for G.992.2 FDM and overlapped spectrum implementations

Case #	Loop (see Rec. G.996.1)	Loop Insertion loss @ 300 kHz	Nominal length (km)	Down net data rate (kbit/s)	Up net data rate (kbit/s)	Noise @ ATU-C	Noise @ ATU-R
1	ETSI-0	0 dB	0	1536	512	No	No
2	ETSI-1	40 dB	2.80	1536	256	Euro-K	ETSI-A
3	ETSI-1	50 dB	3.50	1536	96	Euro-K	ETSI-A
4	ETSI-1	40 dB	2.80	1536	448	ETSI-A	ETSI-A
5	ETSI-1	50 dB	3.50	1536	256	ETSI-A	ETSI-A
6	ETSI-1	60 dB	4.20	512	96	ETSI-A	ETSI-A
7	ETSI-1	60 dB	4.20	1536	512	AWGN-140	AWGN-140

APPENDIX I

In anticipation of future revisions of this Recommendation, manufacturers are encouraged to implement and investigate the performance of trellis coding in a splitterless environment as defined in Recommendation G.992.1.

Implementers wishing to investigate the use of trellis coding should negotiate its use via the Non-Standard Facilities (NSF) capabilities of Recommendation G.994.1.

IPR2025-00395
Petitioners' Exhibit 1012
Page 159 of 179

APPENDIX II

Guide to scenarios for the implementation of the various procedures in Recommendations G.994.1 and G.992.2

Scope

This informative appendix is intended to guide implementers through multiple scenarios of using Recommendation G.994.1 and this Recommendation together in an implementation. The scenarios exemplify procedures that conform to Recommendation G.994.1 and this Recommendation. The scenarios are not intended to limit Recommendation G.994.1 and this Recommendation but rather are intended to assist implementers in understanding the relationship between the various procedures defined in Recommendations G.994.1 and G.992.2.

Definitions and abbreviations

UC G.992.2 Absolute Upstream Fast Retrain Power Cutback, transmitted by the CP in the R-MSG-FR1 bits u_4-u_0.

RDC G.992.2 Relative Downstream Fast Retrain Power Cutback, transmitted by the CP in the R-MSG-FR1 bits d_4-d_0.

DPI G.992.2 Initialization Politeness Power Cutback, transmitted by the CO in the C-MSG1 bits 8-6.

DPF G.992.2 Fast Retrain Politeness Power Cutback, transmitted by the CO in the C-MSG-FR1 bits b_4-b_0.

UMAX G.994.1 maximum power for an upstream signal, defined in Recommendation G.994.1.

DMAX G.994.1 maximum power for a downstream signal, defined in Recommendation G.994.1.

g_i G.992.2 Gain scaling values applied during modulation in either the upstream or downstream direction.

In the definitions of acronyms above, the letters U and D of the acronyms represent upstream and downstream, respectively. The letter R represents relative, and the letter C represents cutback. The letters I and F represent initialization and "fast retrain," respectively.

Note on the use of PSD level

This appendix often describes PSD levels of particular signals in either G.992.2 or G.994.1. In all cases, the PSD level described should be referenced back to the defining document to determine the exact method of measuring the power.

For signals that are composed of single or multiple continuous subcarriers, the PSD level must be interpreted as a power number per subcarrier rather than a density. For G.992.2 maximum levels, Table II.1 should be used (). Other cutback values for G.992.2 and G.994.1 have similar relationship between the PSD level and the power per subcarrier.

Table II.1/G.992.2 – PSD level and power per Subcarrier

PSD Level	Power
–38 dBm/Hz	–1.65 dBm/subcarrier
–40 dBm/Hz	–3.65 dBm/subcarrier

IPR2025-00395
Petitioners' Exhibit 1012
Page 160 of 179

Scenarios

The scenarios included in this appendix are organized into several categories for convenience. Each scenario is presented with a list of successive steps the ATU pair might execute. These steps are examples only and do not provide an exhaustive listing of all allowable steps.

Each scenario is also presented in a timeline similar to those used in the main body of this Recommendation. The timeline shows the progression of ATU states, power levels used at each transmitter, and references to the appropriate clauses of Recommendation G.994.1 and this Recommendation.

Following the timeline of some scenarios that invoke various power cutback levels, hypothetical examples are provided to illustrate various conditions that effect the scenario's power cutback levels.

Activation scenarios

These scenarios represent situations in which the ADSL link is activated with one or the other end having no memory of any prior activation.

First Successful On-hook Activation

This scenario describes a sequence that might occur during the first activation of the ADSL link from power management states L3 to L0. Both ATUs are assumed installed and ready to operate. The ATUs have no memory of past activation.

For convenience in describing the scenario, the ATU state sequence is broken into several blocks as given in Table II.2. The step numbers in the table refer to the paragraph numbers that follow in this subclause.

Table II.2/G.992.2 – Blocks of First Successful On-Hook Activation Scenario

Block	Steps
First G.994.1	1-3
Aborted Fast Retrain	4-5
Second G.994.1	6-8
Second Fast Retrain	9-13
Third G.994.1	14-16
Initialization Procedure	17-21
SHOWTIME	22

The scenario proceeds as described in the following steps and as depicted in Figure II.1. The duration of states C-SILENT1 and R-SILENT0 described in this section and as shown in Figure II.1 may be unnoticeably small at the receiving ATU.

IPR2025-00395
Petitioners' Exhibit 1012
Page 161 of 179

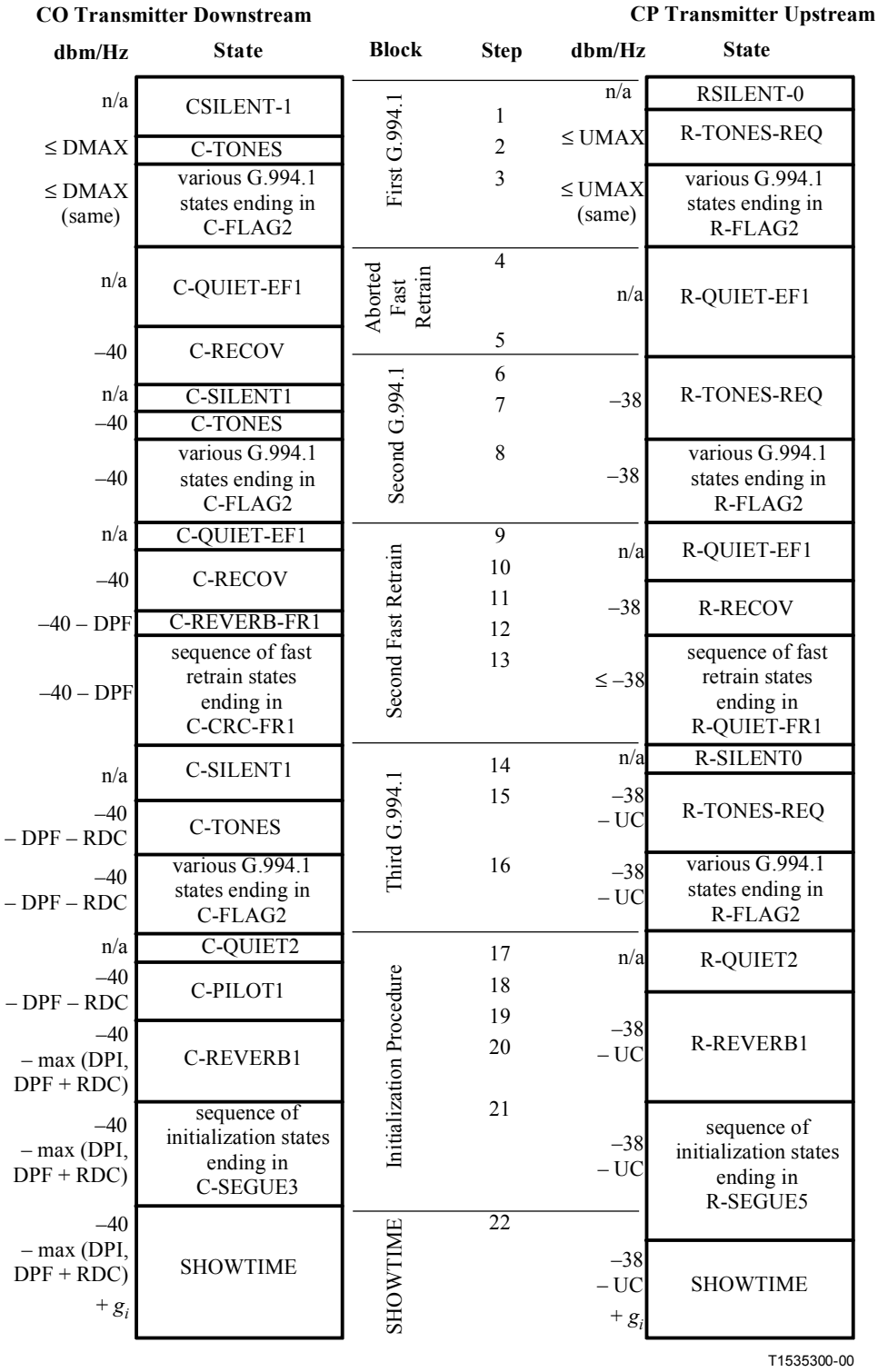

Figure II.1/G.992.2 – First time activation scenario

First G.994.1

1 The ATU-R initiates G.994.1 by transmitting R-TONES-REQ at no greater than the maximum G.994.1 power level for upstream (UMAX).

2 The ATU-C responds with G.994.1 by transmitting C-TONES at no greater than the maximum G.994.1 power level for downstream (DMAX).

IPR2025-00395
Petitioners' Exhibit 1012
Page 162 of 179

3 Both ATUs continue the G.994.1 procedure using the same power levels and terminate the G.994.1 procedure using a mode select transaction with a G.992.2 code point asserted and the escape to fast retrain bit asserted.

Aborted Fast Retrain

4 Both ATUs observe the quiet period requirement of the escape to fast retrain procedure.

5 The ATU-C initiates the fast retrain procedure by transmitting the C-RECOV signal at –40 dBm/Hz.

Second G.994.1

6 The ATU-R aborts the fast retrain by again transmitting R-TONES-REQ at –38 dBm/Hz so that the G.994.1 procedures will be repeated at nominal power levels specified by G.992.2 to facilitate average power level measurement at the CO.

7 The ATU-C restarts G.994.1 by transitioning to C-SILENT1 and transmitting C-TONES at –40 dBm/Hz level.

8 Both ATUs continue with G.994.1 procedure using the same power levels and again terminate using a mode select transaction with a G.992.2 code point asserted and the escape to fast retrain bit asserted. The ATU-C measures the G.994.1 average received power per tone during the procedure.

Second Fast Retrain

9 Both ATUs observe the quiet period requirement of the escape to fast retrain procedure.

10 The ATU-C initiates the fast retrain procedure by transmitting C-RECOVER signal at –40 dBm/Hz.

11 The ATU-R responds with the fast retrain procedure by transmitting the R-RECOV signal at –38 dBm/Hz, and the ATU-C measures the received power. This power measurement and the measurements made during G.994.1 are combined in a vendor discretionary manner at the CO to form an "average". The "average" is used by the ATU-C to determine the fast retrain politeness power cutback (DPF) of 0, 2, 4, 6, 8, 10, or 12 dB.

12 ATU-C continues the fast retrain procedure by transmitting C-REVERB-FR1 at –40 – DPF dBm/Hz.

13 Both ATUs truncate the fast retrain procedure using the bits in R-MSG-FR1 and C-MSG-FR1. The ATU-C transmits at a power level of –40 – DPF dBm/Hz. The ATU-R transmits at a single vendor discretionary power level less than or equal to –38 dBm/Hz. During the messages exchanged in this fast retrain procedure, the ATU-R commands the ATU-C of the relative downstream power fast retrain power cutback (RDC) that shall be used and informs the ATU-C of the absolute upstream fast retrain power cutback (UC) that it shall use. The ATU-C informs the ATU-R of the fast retrain politeness cutback (DPF) that was used during the fast retrain procedure.

Third G.994.1

14 The ATU-R initiates G.994.1 by transitioning to R-SILENT0 and transmitting R-TONES-REQ at –38 – UC dBm/Hz.

15 The ATU-C responds with G.994.1 by transitioning to C-SILENT1 and transmitting C-TONES at –40 – DPF – RDC dBm/Hz.

16 Both ATUs continue with the G.994.1 procedure and terminate it using a mode select transaction with a G.992.2 code point asserted (and the escape to fast retrain bit is not asserted).

IPR2025-00395
Petitioners' Exhibit 1012
Page 163 of 179

Initialization Procedure

17 Both ATUs observe the quiet period required at the start of the G.992.2 initialization procedure.

18 The ATU-C continues the initialization procedure by transmitting C-PILOT at –40 – DPF – RDC dBm/Hz.

19 The ATU-R responds by transmitting R-REVERB1 at –38 – UC dBm/Hz, and the ATU-C measures the received power in 12 tones to determine a new initialization politeness power cutback (DPI) of 0, 2, 4, 6, 8, 10, or 12 dB.

20 The ATU-C starts transmitting C-REVERB1 at –40 – 2*n*. The value of 2*n* is the maximum of the value of (DPF + RDC) and the value of DPI.

21 Both ATUs finish the initialization procedure and go to SHOWTIME. During the messages exchanged in this initialization procedure, the ATU-C informs the ATU-R of the value of DPI that was determined (but the value 2*n* is the absolute power cutback used by the ATU-C). Both ATUs signal that they have lost all profiles, and both ATU erase any profile information currently stored.

SHOWTIME

22 During SHOWTIME, both ATUs save profile #0 using the aoc protocol. The ATU-C transmits at –40 – 2*n* dBm/Hz. The ATU-R transmits at –38 – UC dBm/Hz.

This scenario conforms to G.992.2 for all cases of short and long loops, on-hook and off-hook conditions, and with or without in-line filters. However, the effect of power cutback varies considerably in each of these cases. Several examples are provided to clarify the effect of power cutback in these cases. Each example is summarized with a table that depicts the same state flow of both ATUs as shown in Figure II.1. The template for the example is shown in Table II.3.

Table II.3/G.992.2 – Summary of First Time Install Scenario

ATU-C Block	dBm/Hz	Steps	ATU-R Block	dBm/Hz
First G.994.1	≤ DMAX	1 -3	First G.994.1	≤ UMAX
Aborted First Fast Retrain	–40	4-5	N/A	
Second G.994.1	–40	6-8	Second G.994.1	–38
Second Fast Retrain C-RECOV	–40	9-11	Second Fast Retrain R-RECOV	–38
Remainder of Second Fast Retrain	–40 – DPF	12-13	Remainder of Second Fast Retrain	≤ –38
Third G.994.1	–40 – DPF – RDC	14-16	Third G.994.1	–38 – UC
C-PILOT	–40 – DPF – RDC	17-19	R-REVERB1	–38 – UC
C-REVERB1 and Remainder of Initialization Procedure	–40 – max (DPI, DPF + RDC)	20-21	Remainder of Initialization Procedure	–38 – UC
SHOWTIME	–40 – max (DPI, DPF + RDC) + g_i	22	SHOWTIME	–38 – UC + g_i

Example with Long Loop and In-line Filters

During the scenario in this example with long loops and no effect from telephony devices, there will be no politeness or fast retrain power cutbacks. A numeric example of the various power levels is summarized in Table II.4.

IPR2025-00395
Petitioners' Exhibit 1012
Page 164 of 179

Table II.4/G.992.2 – Power Levels for Install Case with Long Loop with In-Line Filters

ATU-C Block	dBm/Hz	ATU-R Block	dBm/Hz
First G.994.1	≤ DMAX	First G.994.1	≤ UMAX
Aborted First Fast Retrain	–40	N/A	
Second G.994.1	–40	Second G.994.1	–38
Second Fast Retrain C-RECOV	–40	Second Fast Retrain R-RECOV	–38
Remainder of Second Fast Retrain	–40	Remainder of Second Fast Retrain	≤ –38
Third G.994.1	–40	Third G.994.1	–38
C-PILOT	–40	R-REVERB1	–38
C-REVERB1 and Remainder of Initialization Procedure	–40	Remainder of Initialization Procedure	–38
SHOWTIME	$-40 + g_i$	SHOWTIME	$-38 + g_i$

Example with Short Loop and In-line Filters

During the scenario in this case, the two politeness cutbacks will be active and there will be no fast retrain power cutback. A numeric example of the various power levels is shown in Table II.5. In this example, the value of DPF is 10 dB, and the value of DPI is 12 dB.

Table II.5/G.992.2 – Power Levels for Install Case with Short Loop with In-Line Filters

ATU-C Block	dBm/Hz	ATU-R Block	dBm/Hz
First G.994.1	≤ DMAX	First G.994.1	≤ UMAX
Aborted First Fast Retrain	–40	N/A	
Second G.994.1	–40	Second G.994.1	–38
Second Fast Retrain C-RECOV	–40	Second Fast Retrain R-RECOV	–38
Remainder of Second Fast Retrain	–50	Remainder of Second Fast Retrain	≤ –38
Third G.994.1	–40	Third G.994.1	–38
C-PILOT	–40	R-REVERB1	–38
C-REVERB1 and Remainder of Initialization Procedure	–52	Remainder of Initialization Procedure	–38
SHOWTIME	$-52 + g_i$	SHOWTIME	$-38 + g_i$

Example with Short Loop and Non-ideal Telephone Devices

During the scenario in this case, the politeness power cutbacks will be active and there will be fast retrain power cutbacks in each direction. A numeric example of the various power levels is shown in Table II.6. In this example, the value of DPF is 4 dB, and the value of DPI is 2 dB. The values of RDC and UC are 12 and 10 dB, respectively.

IPR2025-00395
Petitioners' Exhibit 1012
Page 165 of 179

Table II.6/G.992.2 – Power Levels for Install Case with Short Loop with Non-ideal Telephone Devices

ATU-C Block	dBm/Hz	ATU-R Block	dBm/Hz
First G.994.1	≤ DMAX	First G.994.1	≤ UMAX
Aborted First Fast Retrain	–40	N/A	
Second G.994.1	–40	Second G.994.1	–38
Second Fast Retrain C-RECOV	–40	Second Fast Retrain R-RECOV	–38
Remainder of Second Fast Retrain	–44	Remainder of Second Fast Retrain	≤ –38
Third G.994.1	–56	Third G.994.1	–48
C-PILOT	–56	R-REVERB1	–48
C-REVERB1 and Remainder of Initialization Procedure	–56	Remainder of Initialization Procedure	–48
SHOWTIME	$-56 + g_i$	SHOWTIME	$-48 + g_i$

Example with Long Loop and Non-ideal Telephone Devices

During the scenario in this case, there will be no politeness cutbacks but there will be fast retrain power cutbacks in each direction. A numeric example of the various power levels is shown in Table II.7. In this example, the value of RDC and UC are 4 and 12 dB, respectively.

Table II.7/G.992.2 – Power Levels for Install Case with Long Loop with Non-ideal Telephone Devices

ATU-C Block	dBm/Hz	ATU-R Block	dBm/Hz
First G.994.1	≤ DMAX	First G.994.1	≤ UMAX
Aborted First Fast Retrain	–40	N/A	
Second G.994.1	–40	Second G.994.1	–38
Second Fast Retrain C-RECOV	–40	Second Fast Retrain R-RECOV	–38
Remainder of Second Fast Retrain	–40	Remainder of Second Fast Retrain	≤ –38
Third G.994.1	–44	Third G.994.1	–50
C-PILOT	–44	R-REVERB1	–50
C-REVERB1 and Remainder of Initialization Procedure	–44	Remainder of Initialization Procedure	–50
SHOWTIME	$-44 + g_i$	SHOWTIME	$-50 - g_i$

Normal Operating Scenarios

These scenarios represent situations that will normally occur while operating in the SHOWTIME L0 and L1 link states.

First Off-hook Condition

This scenario describes a sequence that might occur during the first off-hook condition following activation of the ADSL link. Both ATUs are assumed to be operating in the SHOWTIME state. The ATUs have only profile #0 stored associated with the present SHOWTIME configuration. A non-ideal telephone device without an in-line filter is assumed to go to its off-hook state in this scenario.

IPR2025-00395
Petitioners' Exhibit 1012
Page 166 of 179

For convenience in describing the scenario, the ATU state sequence is broken into several blocks as given in Table II.8. The step numbers in the table refer to the paragraph numbers that follow in this subclause.

Table II.8/G.992.2 – Blocks of First Off-Hook Scenario

Block	Steps
First SHOWTIME	
Fast Retrain	1-5
G.994.1	6-8
Initialization Procedure	9-13
Second SHOWTIME	14

The scenario proceeds as described in the steps below and as depicted in Figure II.2. The duration of states C-SILENT1 and R-SILENT0 described in this subclause and as shown in Figure II.2 may be unnoticeably small at the receiving ATU.

IPR2025-00395
Petitioners' Exhibit 1012
Page 167 of 179

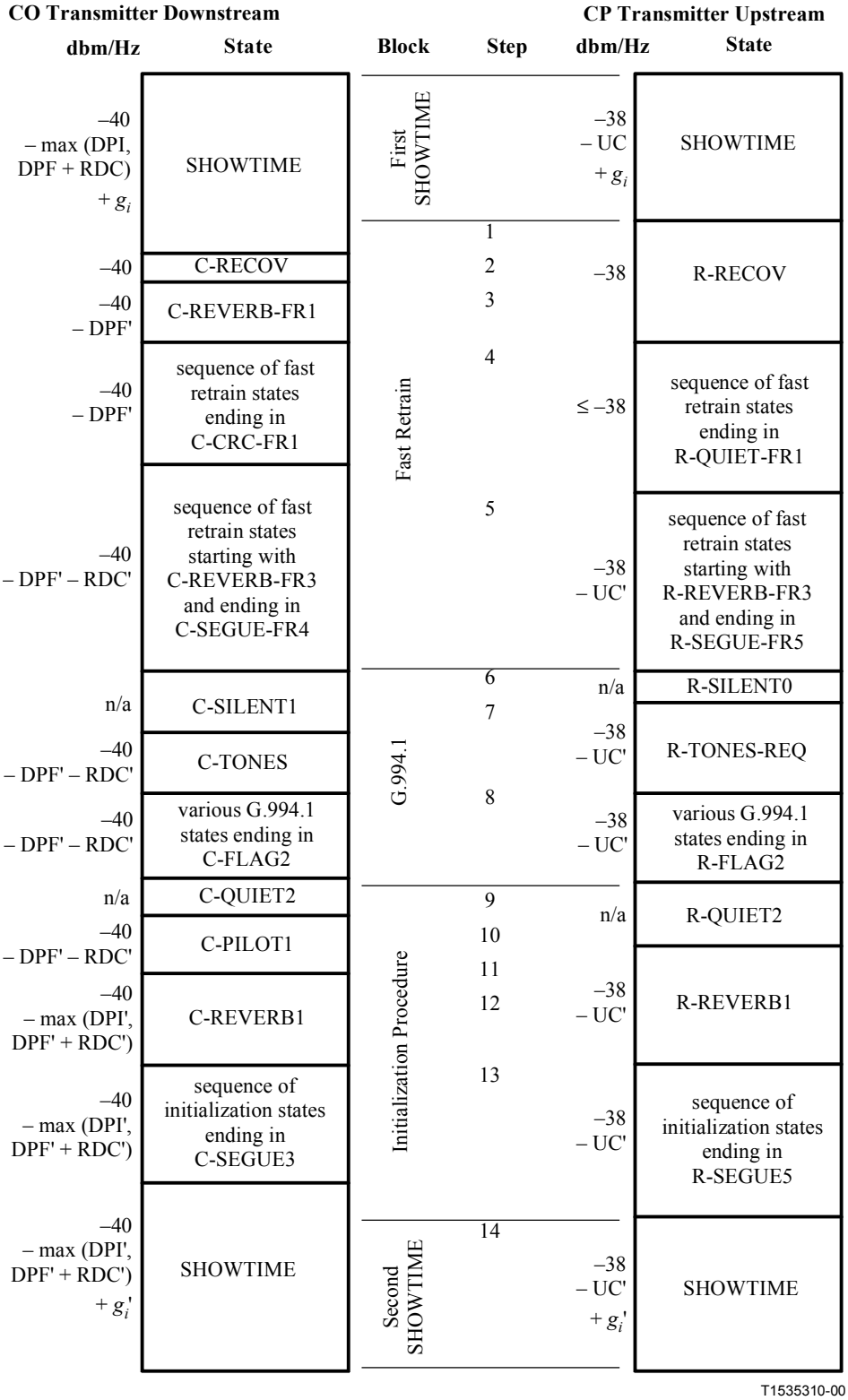

Figure II.2/G.992.2 – First off-hook telephone scenario

IPR2025-00395
Petitioners' Exhibit 1012
Page 168 of 179

Fast Retrain

1 The ATU-R initiates the fast retrain procedure by transmitting R-RECOV signal at –38 dBm/Hz. In this example, the ATU-C does not measure the received power of the tone to calculate DPF as in the install scenario in First Successful On-hook Activation.

2 The ATU-C initiates the fast retrain procedure by transmitting C-RECOV signal at –40 dBm/Hz.

3 The ATU-C transmits C-REVERB-FR1 at –40 – DPF. In this example, the ATU-C sets DPF to the previous value of DPI unlike the install scenario in First Successful On-hook Activation.

4 In this example, both ATUs execute the first portion of the fast retrain procedure (through C-CRC-FR1 and R-QUIET-FR1).The ATU-C transmits at a power level of –40 – DPF dBm/Hz. The ATU-R transmits at a single vendor discretionary power level of less than or equals –38 dBm/Hz. During the messages exchanged in this fast retrain procedure, the ATU-R commands the ATU-C of the value of RDC that shall be used and informs the ATU-C of the value of UC that it shall use. The ATU-C informs the ATU-R of the value of DPF that it has been using.

5 Both ATUs complete the fast retrain procedure. The ATU-C transmits at a power level of –40 – DPF – RDC dBm/Hz. The ATU-R transmits at a power level of –38 – UC dBm/Hz. In this example, the ATUs both select the unknown profile during message exchanges of the fast retrain procedure.

G.994.1

6 The ATU-R initiates G.994.1 by transitioning to R-SILENT0 and transmitting R-TONES-REQ at –38 – UC dBm/Hz.

7 The ATU-C initiates G.994.1 by transitioning to C-SILENT1 and transmitting C-TONES at –40 – DPF – RDC dBm/Hz.

8 Both ATUs continue with the G.994.1 procedure and terminate it using a mode select transaction with a G.992.2 code point asserted. The escape to fast retrain bit is not asserted.

Initialization Procedure

9 Both ATUs observe the quiet period required at the start of the G.992.2 initialization procedure.

10 The ATU-C continues the initialization procedure by transmitting C-PILOT at –40 – DPF – RDC dBm/Hz.

11 The ATU-R responds by transmitting R-REVERB1 at –38 –UC dBm/Hz, and the ATU-C measures the received power in 12 tones to determine a new value of DPI = 0, 2, 4, 6, 8, 10, or 12 dB.

12 The ATU-C starts transmitting C-REVERB1 at –40 – 2*n*. The value of 2*n* is the maximum of the value of (DPF + RDC) and the value of DPI.

13 Both ATUs finish the initialization procedure and go to SHOWTIME. During the messages exchanged in this initialization procedure, the ATU-C informs the ATU-R of the DPI cutback that was determined (but the value 2n is the absolute power cutback used by the ATU-C). Note that this is expected to be the same as the previous determination of DPI, but there could be variation.

IPR2025-00395
Petitioners' Exhibit 1012
Page 169 of 179

Second SHOWTIME

14 During SHOWTIME, both ATUs save profile #1 using the aoc protocol.

This scenario conforms to G.992.2 for all cases of short and long loops. However, the effect of power cutback varies somewhat for each these cases. Examples are provided to clarify the effect of power cutback in these cases. Each example is summarized with a table that depicts the same state flow of both ATUs as shown in Figure II.2. The template for the example is shown in Table II.9. The apostrophe (') following names indicates the new values determined during the fast retrain and initialization procedures.

Table II.9/G.992.2 – Summary of First Off-Hook Condition Scenario

ATU-C Block	dBm/Hz	Steps	ATU-R Block	dBm/Hz
First SHOWTIME	–40 – max(DPI, DPF + RDC) + g_i		First SHOWTIME	–38 – UC + g_i
Fast Retrain C-RECOV	–40	1-2	Fast Retrain R-RECOV	–38
First Portion of Fast Retrain	–40 – DPF'	3-4	First Portion of Fast Retrain	≤ –38
Remainder of Fast Retrain	–40 – DPF' – RDC'	5	Remainder of Fast Retrain	–38 – UC'
G.994.1	–40 – DPF' – RDC'	6-8	G.994.1	–38 – UC'
C-PILOT	–40 – DPF' – RDC'	9-11	R-REVERB1	–38 – UC'
C-REVERB1 and Remainder of Initialization Procedure	–40 – max(DPI', DPF' + RDC')	12-13	Remainder of Initialization Procedure	–38 – UC'
SHOWTIME	–40 – max (DPI', DPF' + RDC') + g_i'	14	SHOWTIME	–38 – UC' + g_i'

Example with Long Loop

During the scenario in this case, no politeness cutbacks are active. A numeric example of the various power levels is shown in Table II.10. In this example, the new values of RDC and UC are 4 and 18 dB, respectively. The previous values of RDC and UC are 0 and 6 dB, respectively.

Table II.10/G.992.2 – Power Levels for Off-hook Operating Case with Long Loop

ATU-C Block	dBm/Hz	ATU-R Block	dBm/Hz
First SHOWTIME	–40 + g_i	First SHOWTIME	–44 + g_i
Fast Retrain C-RECOV	–40	Fast Retrain R-RECOV	–38
First Part of Fast Retrain	–40	First Part of Fast Retrain	≤ –38
Remainder of Fast Retrain	–44	Remainder of Fast Retrain	–56
G.994.1	–44	G.994.1	–56
C-PILOT	–44	R-REVERB1	–56
C-REVERB1 and Remainder of Initialization Procedure	–44	Remainder of Initialization Procedure	–56
SHOWTIME	–44 + g_i'	SHOWTIME	–56 + g_i'

IPR2025-00395
Petitioners' Exhibit 1012
Page 170 of 179

Example with Short Loop

During the scenario in this case, both politeness and fast retrain power cutbacks are active. A numeric example of the various power levels is shown in Table II.11. In this example, the new values of DPF and DPI are 6 and 8 dB, respectively. The new values of RDC and UC are 12 and 22 dB, respectively. The previous value of DPF and DPI are 10 and 6 dB, respectively. The previous values of RDC and UC are both 0.

Table II.11/G.992.2 – Power Levels for Off-hook Operating Case with Short Loop

ATU-C Block	dBm/Hz	ATU-R Block	dBm/Hz
First SHOWTIME	$-50 + g_i$	First SHOWTIME	$-38 + g_i$
Fast Retrain C-RECOV	–40	Fast Retrain R-RECOV	–38
First Part of Fast Retrain	–40	First Part of Fast Retrain	–38
Remainder of Fast Retrain	–58	Remainder of Fast Retrain	–60
G.994.1	–58	G.994.1	–60
C-PILOT	–58	R-REVERB1	–60
C-REVERB1 and Remainder of Initialization Procedure	–58	Remainder of Initialization Procedure	–60
SHOWTIME	$-58 + g_i$	SHOWTIME	$-60 + g_i'$

Return to On-hook Condition

This scenario describes a sequence that might occur following an off-hook condition as the telephone device returns to the on-hook condition. The ATUs have profiles #0 stored, and #0 is associated with the previous on-hook condition. A non-ideal telephone device without an in-line filter is assumed to go to its on-hook condition in this scenario.

For convenience in describing the scenario, the ATU state sequence is broken into several blocks as given in Table II.8. The step numbers in the table refer to the paragraph numbers that follow in this subclause.

Table II.12/G.992.2 – Blocks of Return to On-Hook Scenario

Block	Steps
First SHOWTIME	
Fast Retrain	1-5
Second SHOWTIME	6

IPR2025-00395
Petitioners' Exhibit 1012
Page 171 of 179

The scenario proceeds as described in the steps below and as depicted in Figure II.3.

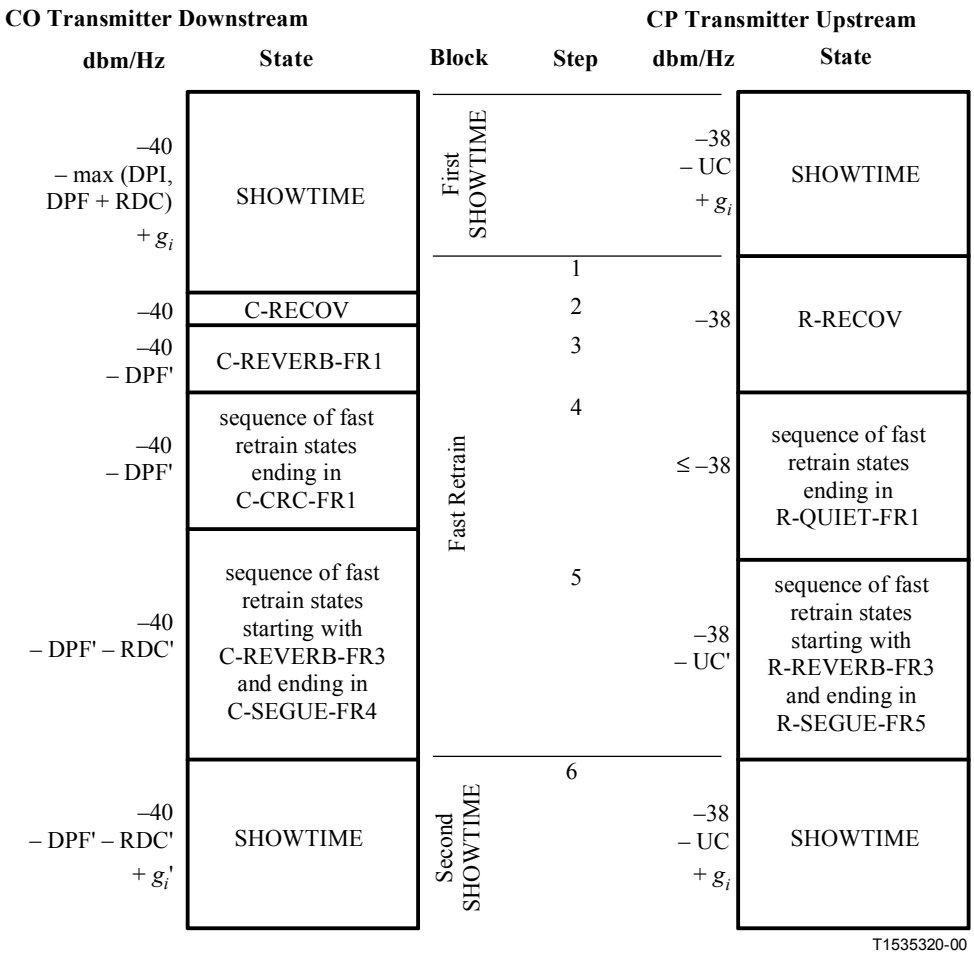

Figure II.3/G.992.2 – Return to On-Hook Scenario

Fast Retrain

1 The ATU-R initiates the fast retrain procedure by transmitting R-RECOV signal at –38 dBm/Hz. In this example, the ATU-C does not measure the received power of the tone to calculate DPF cutback as in the install scenario in First Successful On-hook Activation.

2 The ATU-C initiates the fast retrain procedure by transmitting C-RECOV signal at –40 dBm/Hz.

3 The ATU-C transmits C-REVERB-FR1 at –40 – DPF. In this example, the ATU-C sets DPF to the previous value of DPI unlike the install scenario in First Successful On-hook Activation.

4 Both ATUs execute the first portion of the fast retrain procedure (through C-CRC-FR1 and R-QUIET-FR1). The ATU-C transmits at a power level of –40 – DPF dBm/Hz. The ATU-R transmits at a power level of –38 dBm/Hz. During the messages exchanged in this fast retrain procedure, the ATU-R commands the ATU-C of the value of RDC that the ATU-C shall be used and informs the ATU-C of the value of UC that it shall use. The ATU-C informs the ATU-R of the value of DPF that it has been using.

5 Both ATUs complete the fast retrain. The ATU-C transmits at a power level of –40 – DPF – RDC dBm/Hz. The ATU-R transmits at a power level of –38 – UC dBm/Hz. In

IPR2025-00395
Petitioners' Exhibit 1012
Page 172 of 179

this example, the ATUs both select profile #0 during message exchanges of the fast retrain procedure.

Second SHOWTIME

6 Both ATUs return to SHOWTIME. The ATU-C transmits at a power level of –40 – DPF – RDC adjusted by the g_i tables from the profile #0. Note that this is different that the downstream PSD equation in First Successful On-hook Activation and First Off-hook Condition. The ATU-R transmits at a power level of –38 – UC adjusted by the g_i tables from the profile #0.

This scenario conforms to G.992.2 for all cases of short and long loops. However, the effect of power cutback varies somewhat for each these cases. Examples are provided to clarify the effect of power cutback in these cases. Each example is summarized with a table that depicts the same state flow of both ATUs as shown in Figure II.3. The template for the example is shown in Table II.13. The apostrophe (') following names indicates the new values determined during the fast retrain and initialization procedures.

Table II.13/G.992.2 – Summary Return to On-Hook Scenario

ATU-C Block	dBm/Hz	Steps	ATU-R Block	dBm/Hz
First SHOWTIME	–40 – max (DPI, DPF + RDC) + g_i		First SHOWTIME	–38 – UC + g_i
Fast Retrain C-RECOV	–40	1-2	Fast Retrain R-RECOV	–38
First Portion of Fast Retrain	–40 – DPF'	3-4	First Portion of Fast Retrain	≤ –38
Remainder of Fast Retrain	–40 – DPF' – RDC'	5	Remainder of Fast Retrain	–38 – UC'
SHOWTIME	–40 – DPF' – RDC' + g_i'	6	SHOWTIME	–38 – UC' + g_i'

Example with Long Loop

During the scenario in this case, politeness cutbacks are not active. A numeric example of the various power levels is shown in Table II.14. In this example, the new values of RDC and UC are 0. The previous values of DPI, DPF, RDC, and UC are 0, 0, 6, and 12 dB, respectively.

Table II.14/G.992.2 – Power Levels for On-hook Operating Case with Long Loop

ATU-C Block	dBm/Hz	ATU-R Block	dBm/Hz
First SHOWTIME	–46 + g_i	First SHOWTIME	–50 + g_i
Fast Retrain C-RECOV	–40	Fast Retrain R-RECOV	–38
First Portion of Fast Retrain	–40	First Portion of Fast Retrain	≤ –38
Remainder of Fast Retrain	–40	Remainder of Fast Retrain	–38
SHOWTIME	–40 + g_i	SHOWTIME	–38 + g_i

Example with Short Loop

During the scenario in this case, both politeness and fast retrain power cutbacks are active. A numeric example of the various power levels is shown in Table II.15. In this example, the new values of DPF, RDC and UC are 4, 2, and 0. The previous values of DPI, DPF, RDC, and UC are 6, 4, 14, and 24 dB, respectively.

IPR2025-00395
Petitioners' Exhibit 1012
Page 173 of 179

Table II.15/G.992.2 – Power Levels for On-hook Operating Case with Short Loop

ATU-C Block	dBm/Hz	ATU-R Block	dBm/Hz
First SHOWTIME	$-58 + g_i$	First SHOWTIME	$-62 + g_i$
Fast Retrain C-RECOV	–40	Fast Retrain R-RECOV	–38
First Portion of Fast Retrain	–44	First Portion of Fast Retrain	≤ –38
Remainder of Fast Retrain	–46	Remainder of Fast Retrain	–38
SHOWTIME	$-46 + g_i'$	SHOWTIME	$-38 + g_i'$

Power Management Scenarios

These scenarios represent situations that will normally occur while transitioning among the three defined power management states L0, L1, and L3 using the power management transitions described in this Recommendation.

Retrain Scenarios

While in L0 or L1 SHOWTIME states, line conditions or external commands may lead to the desire to retrain the modems. The special cases of off-hook and on-hook L0 to L0 transitions has already been presented in Normal Operating Scenarios where fast retrain is first attempted followed by initialization if necessary. This also applies to the scenario of L0 to L0 and L1 to L0 transitions that require retraining for other reasons. The fast retrain followed by initialization provides all necessary power cutbacks, allows the modems to quickly return to SHOWTIME if any stored profile matches, and provides full initialization if not.

Wake-up Scenarios

This situation occurs when one of the ATUs desires to wake the link from L3 state and return it to L0 state. Either ATU may initiate the wake-up procedure. If the initiating ATU has retained memory, it may begin with either the fast retrain procedure or the initialization procedure. If the initiating ATU has not retained memory, it will begin with the initialization procedure. If the responding ATU has lost memory, it will abort a fast retrain request and will begin the initialization procedure.

A summary of these combinations is presented in Table II.16 and details of the procedures are explained in the indicated paragraphs.

Table II.16/G.992.2 – Scenarios for Waking from L3 Link State

CO Memory	CP Memory	Initiator	Procedure First Used	Scenario
Retained	Retained	ATU-C	Initialization	Wake-up Starting with Initialization
		ATU-C	Fast Retrain	Wake-up Starting With Fast Retrain
		ATU-R	Initialization	Wake-up Starting with Initialization
		ATU-R	Fast Retrain	Wake-up Starting With Fast Retrain
Retained	Lost	ATU-C	Initialization	First Successful On-hook Activation
		ATU-C	Fast Retrain	ATU-R aborts fast retrain request and proceeds as in Wake-up Starting with Initialization
		ATU-R	Initialization	Wake-up Starting with Initialization

IPR2025-00395
Petitioners' Exhibit 1012
Page 174 of 179

Table II.16/G.992.2 – Scenarios for Waking from L3 Link State *(concluded)*

CO Memory	CP Memory	Initiator	Procedure First Used	Scenario
Lost	Retained	ATU-C	Initialization	Wake-up Starting with Initialization
		ATU-R	Initialization	Wake-up Starting with Initialization
		ATU-R	Fast Retrain	ATU-C aborts fast retrain request and proceeds as in Wake-up Starting with Initialization
Lost	Lost	ATU-C	Initialization	Wake-up Starting with Initialization
		ATU-R	Initialization	Wake-up Starting with Initialization

Wake-up Starting With Fast Retrain

An ATU that has retained memory can begin the wake-up procedure using the fast retrain procedure. The ATU initiates either the C-RECOVER or R-RECOVER signals. The action taken by the responding ATU depends upon whether it has retained memory.

Responding ATU Has Retained Memory

If the responding ATU has retained memory, it will respond with the C-RECOVER or R-RECOVER signal at nominal G.992.2 power level and attempt to recall a stored profile to return to link state L0. If the result is the unknown profile, the initialization procedure will follow.

The scenario with the ATU-R initiating proceeds using exactly the same six steps as in Return to On-hook Condition. The state sequence is exactly as shown in Figure II.3, except that both ATUs start in a silent state. PSD levels to be used are as summarized in Table II.13.

If an unknown profile were selected by the fast retrain in this scenario, then G.994.1 and the G.992.2 initialization procedure would be invoked using the fast retrain power cutbacks to return to L0 SHOWTIME.

Responding ATU Has Not Retained Memory

If the responding ATU has not retained memory, there is little point to attempting to match a stored profile. However, the fast retrain procedure is useful to determine necessary power cutback levels. The ATU will respond with the C-RECOVER or R-RECOVER signal at nominal G.992.2 power levels and use the fast retrain truncate followed by the initialization procedure to return to the L0 link state.

The scenario with the ATU-R initiating proceeds using exactly the same steps starting with step 11 as in First Successful On-hook Activation. The state sequence is exactly as shown in Figure II.1 starting from step 11. Both ATUs start in a silent state prior to step 11. PSD levels to be used are as summarized in Table II.3.

Wake-up Starting with Initialization

If an ATU has not retained memory, it beings with the initialization procedure using G.994.1. Since it is unknown if the other side has retained memory, the responding G.994.1 power levels may not be G.992.2 nominal. Because of this, the procedure used for wake-up starting with initialization is as in First Successful On-hook Activation.

The scenario with the ATU-R initiating proceeds using exactly the steps as in First Successful On-hook Activation. The PSD levels to be used are as summarized in Table II.3.

Error Recovery Scenarios

These scenarios represent error conditions that may occur during the procedures.

IPR2025-00395
Petitioners' Exhibit 1012
Page 175 of 179

Unable to Install Scenario

In this scenario, two ATUs are assumed attached to the line. However, they are unable to reach the SHOWTIME state because of some malfunction. In this example, the malfunction is one that comes during the initialization procedure's exchange sequence.

The scenario begins as in First Successful On-hook Activation. However, for this example, a malfunction occurs in step 21. The ATUs invoke the initialization reset procedure and begin G.994.1 at nominal power levels. Assuming the ATUs desire to attempt another connection, they again go through the sequence of First Successful On-hook Activation, except they may skip steps 1-5 because G.994.1 power levels are already known to be at nominal levels. This may continue for some time. If the SHOWTIME state cannot be reached repeatedly, the ATUs can use G.994.1 to select another common mode of operation or send a mode select command with all zero operation mode bits to terminate the attempts.

The use of fast retrain followed by initialization provides all necessary power cutbacks for the repeated attempts to train that may occur with phone devices in various hook switch conditions.

Unable to Fast Retrain

If a malfunction is detected while executing the fast retrain algorithm, the ATUs may either repeat the fast retrain a number of times or invoke the initialization procedure. Repeating the fast retrain a number of times may allow telephony device characteristics adequate settling time for the retrain to be successful. If continued malfunctions occur, the reset initialization procedure is invoked and the ATUs begin G.994.1 at nominal power levels. The ATUs again go through the sequence of First Successful On-hook Activation, except they may skip steps 1-5 because G.994.1 power levels are already known to be at nominal levels.

SHOWTIME Error Recovery

If a malfunction is detected while in SHOWTIME, the ATUs invoke either the fast retain procedure or the initialization reset procedure. When using the initialization reset procedure, the ATU's begin G.994.1 at nominal power levels. Assuming the ATUs desire to return to the L0 or L1 state, they go through the sequence of First Successful On-hook Activation, except they may skip steps 1-5 because G.994.1 power levels are already known to be at nominal levels.

APPENDIX III

Compatibility with other Customer Premises Equipment

G.992.2 CPE transceivers may share the CPE wiring plant with other equipment, e.g. networking devices.

Some networking devices can operate above 4 MHz on customer premises phone wiring. To prevent signals from such networking devices from aliasing into the G.992.2 frequency band, the inclusion of an adequate downstream receiver anti-aliasing filter in the G.992.2 device is recommended, collocated with the h-p filter in Figure 1. This filter may take the form of an external, in-line filter or may be integrated into the G.992.2 device.

If a POTS splitter is used in the G.992.2 application to isolate the customer premises wiring from the ADSL signal as noted in Figure 1, then home networking devices may co-exist with voice terminals and non-voice terminals on the TELE/POTS port side (the port in Figure 1 that attaches to the wire leading to the telephone set or voice band modem) of the remote splitter. It is desirable in those cases that the remote POTS splitter be compatible with other customer premises wiring devices (e.g. the TELE/POTS port impedance above 4 MHz should be considered).

IPR2025-00395
Petitioners' Exhibit 1012
Page 176 of 179

Similarly, if an in-line low-pass filter is used in the G.992.2 application as shown in Figure 1, it is desirable that the in-line low-pass filter be compatible with other customer premises wiring devices (e.g. the in-line filter impedance above 4 MHz should be considered).

IPR2025-00395
Petitioners' Exhibit 1012
Page 177 of 179

ITU-T RECOMMENDATIONS SERIES

Series A	Organization of the work of the ITU-T
Series B	Means of expression: definitions, symbols, classification
Series C	General telecommunication statistics
Series D	General tariff principles
Series E	Overall network operation, telephone service, service operation and human factors
Series F	Non-telephone telecommunication services
Series G	**Transmission systems and media, digital systems and networks**
Series H	Audiovisual and multimedia systems
Series I	Integrated services digital network
Series J	Transmission of television, sound programme and other multimedia signals
Series K	Protection against interference
Series L	Construction, installation and protection of cables and other elements of outside plant
Series M	TMN and network maintenance: international transmission systems, telephone circuits, telegraphy, facsimile and leased circuits
Series N	Maintenance: international sound programme and television transmission circuits
Series O	Specifications of measuring equipment
Series P	Telephone transmission quality, telephone installations, local line networks
Series Q	Switching and signalling
Series R	Telegraph transmission
Series S	Telegraph services terminal equipment
Series T	Terminals for telematic services
Series U	Telegraph switching
Series V	Data communication over the telephone network
Series X	Data networks and open system communications
Series Y	Global information infrastructure and Internet protocol aspects
Series Z	Languages and general software aspects for telecommunication systems