ISDN ARCHITECTURE

Richard T. Roca

Richard T. Roca *is director of the AT&T Architecture Center at AT&T Bell Laboratories, Holmdel, N.J. His organization plans the technical aspects of an overall architecture for AT&T's products and services. He joined the company in 1966. He received a B.S. from Lehigh University in that year and the S.M. and Sc.D. from Massachusetts Institute of Technology in 1967 and 1972.*

Modern communications-based applications require a degree of flexibility, user control, responsiveness, and integrative capability beyond that provided in traditional networks. Solutions founded on digital connectivity implemented in a distributed processing environment have begun to meet these needs. These solutions have been constrained, however, by limits to the extent in which systems could communicate with each other across network boundaries. The Integrated Services Digital Network architecture defines key interfaces that support and extend this distributed processing capability and do this in an environment of internationally defined interface standards. These interfaces are channelized into two broad categories: information-bearing channels and signaling channels. Protocols for the latter have been defined using the layered architecture of the open systems interconnect reference model. Two specific ISDN access arrangements have been specified and are planned for systems within an overall ISDN architecture. Applications for such an architecture and future directions are discussed.

Modern communications is being driven by changes in two fundamental areas: user needs and the underpinning technologies. Communications has moved from a back-office capability that has allowed businesses to operate with greater internal efficiency to a front-office necessity impacting the strategic competitiveness of companies. It has moved from a focus on information movement to a broader charter of information movement and management. Users have demanded greater

Authorized licensed use limited to: University of South Florida. Downloaded on October 08,2024 at 19:49:55 UTC from IEEE Xplore. Restrictions apply.

flexibility and control in their communications infrastructure. The ability to tailor communications applications to specific needs and the ability to change these applications rapidly is key to permitting communications to assume this strategic role. Furthermore, since it has become an integral part of the revenue stream of a firm, communications must guarantee levels of reliability and security appropriate to the specific situation. Finally, the ability to control one's information movement and management environment must also include the ability to deal with a number of different vendors, taking from each those products and services best suited to the user's needs. This requires achieving a measure of interface standardization, both domestically and internationally.

Voice has been the dominant mode of communications in the first two-thirds of this century. However, data is becoming, at the least, an equal partner in importance in modern business applications. Furthermore, since multiple forms of data communications have evolved, each must assume its proper place in the overall environment. Consider, for example, the modern factory, with its needs for production control, inventory and material control, voice communications, computer-aided design and manufacturing (CAD/CAM), machine control, electronic mail, cost accounting, payroll, engineering records, etc. While these were separable functions in yesterday's environment, the seriously competitive firm must ensure that information movement and management throughout these processes are part of an effective whole. This will require levels of integration well beyond those in existence today.

As user needs for communications have evolved, so has the underlying technology. Four areas have been key to this evolution: microelectronics, photonics, software, and networking. The resulting trend has been to implement functions in modern communications networks with microelectronic-based digital processors, driven by sophisticated software. Advances in operating systems, database technology, and networking have permitted greater reliance on distributed processing, which has been key to providing the required levels of customization and flexibility.

Users have driven the information movement and management industry to provide greater flexibility, control, responsiveness, and integrative capability in communications products and services. Technology has provided the tools of digital, software-driven, distributed processing. One component of the response to the users by the industry has been the concept of an Integrated Services Digital Network (ISDN). ISDN is an Information Age network concept internationally defined. It provides for integrated access to circuit-switched and packet-switched networks while providing for end-to-end digital transport capability.

The evolving AT&T architectural plan for ISDN is broad because it must support the company's broad business endeavors. Key to the architecture is extensive use of distributed processing and unified, flexible service and network management. Underlying the architecture is the AT&T philosophy that intelligence belongs both on a customer's premises and in the network.

Distributed Processing and Out-of-Band Signaling

Basic to ISDN is the concept of distributed processing and out-of-band signaling. First introduced in AT&T's public switched network and later introduced and expanded in private network implementations, it is key to providing the capabilities needed to satisfy today's users' needs. Before examining ISDN itself, let us look at this basic driving force and the reason for its importance.

Until the late 1970s, when the 4ESS™ toll switch was introduced into the nationwide public switched network, switches had communicated with each other in-band—that is, over the same channels in which the customer's information was transmitted (e.g., voice). Since the communications environment was dominated by voice, communications between the switch processors was restricted to a type and form that could be accommodated in the voice channel. The development of a separate net-

Authorized licensed use limited to: University of South Florida. Downloaded on October 08,2024 at 19:49:55 UTC from IEEE Xplore. Restrictions apply.

IPR2025-00395
Petitioners' Exhibit 1022
Page 2 of 13

ISDN and AT&T

This issue of the AT&T Technical Journal has as its theme the Integrated Services Digital Network. A group of five articles examines ISDN from the perspective of AT&T as a whole, from that of AT&T customers, and from that of entities within AT&T.

In "ISDN Architecture," Richard T. Roca describes the corporation's overall ISDN plans for integrated access to circuit-switched and packet-switched networks and end-to-end digital transport capability. The evolving network, affected systems, and the underlying corporate philosophy are considered.

In "ISDN Standards Evolution," Hrair Aldermeshian describes existing standards for ISDN—a crucial element for compatible worldwide implementation—and presents an evolutionary scenario for future standards.

In "AT&T Communications ISDN Architecture," Marda L. Higdon, Judith T. Page, and Peter Stuntebeck present AT&T Communications' plans for rapid and pervasive implementation during the latter half of the 1980s. Essentially, AT&T's strategy is to put in place the ISDN building blocks so that customers can choose from a rich variety of services.

In "Planning for ISDN in the 5ESS™ Switch," David L. Carney and Edward M. Preil discuss the user groups for the first ISDN services and the ISDN capabilities offered by the 5ESS switch in these services. They describe the ISDN architecture of the 5ESS switch and explain how the ISDN capabilities are built incrementally on the switch's existing, distributed modular structure.

In "The Role of ISDN in AT&T Information Systems Architecture," James L. Neigh and Leslie A. Spindel define a framework for compatibility among AT&T premises products as well as with key products of other vendors. They note that AT&T Information Systems products already provide customers with many ISDN-like capabilities, that their capabilities have proven to be of value to users, and that evolution to full ISDN compatibility will be a straightforward process.

work, called the common channel interoffice signaling (CCIS) network, provided processor-to-processor communications and allowed far more freedom and flexibility.

The CCIS network consists of specialized packet switches distributed throughout the country, deployed in a highly reliable architecture and designed to provide the performance required to establish voice connections. Originally, the driving force behind the network was engineering economy. That is, CCIS was justified through the savings in network facilities (both in switching and in transmission equipment) that this more efficient call processing would provide.

It was quickly realized, however, that the existence of this separate network provided a truly distributed processing system. With it, both data bases and software-based call processing routines which had once resided within individual switches could be moved from these switches and centralized within this signaling network to provide capabilities that had not existed before.

An example of its use is with collect calls and calls charged to a third party. In these examples, the problem of billing fraud has always been of concern. When callers wanted to charge a call, operators had no effective way of checking whether the billing identification provided was valid. Keeping records of all the accounts in all operator systems was impractical. AT&T Calling Card Service provided an answer to this problem. Implemented with the common channel signaling network architecture, it allows these records to be maintained centrally. When the service is requested, network switches interrupt call processing and use the signaling network to access the data base. The data base determines, using the information sent by the switch, whether the call may proceed and sends instructions back to the switch over the signaling network. The switch then manages the call (i.e., completes it or blocks it) on the basis of the instructions. The time for such a transaction is a fraction of a second and well within the bounds acceptable to the user. This approach provides better security for the network and a more responsive capability to the end user. The same architecture has been used to realize AT&T's Advanced 800 service and Software-Defined Network service. The network systems

Authorized licensed use limited to: University of South Florida. Downloaded on October 08,2024 at 19:49:55 UTC from IEEE Xplore. Restrictions apply.

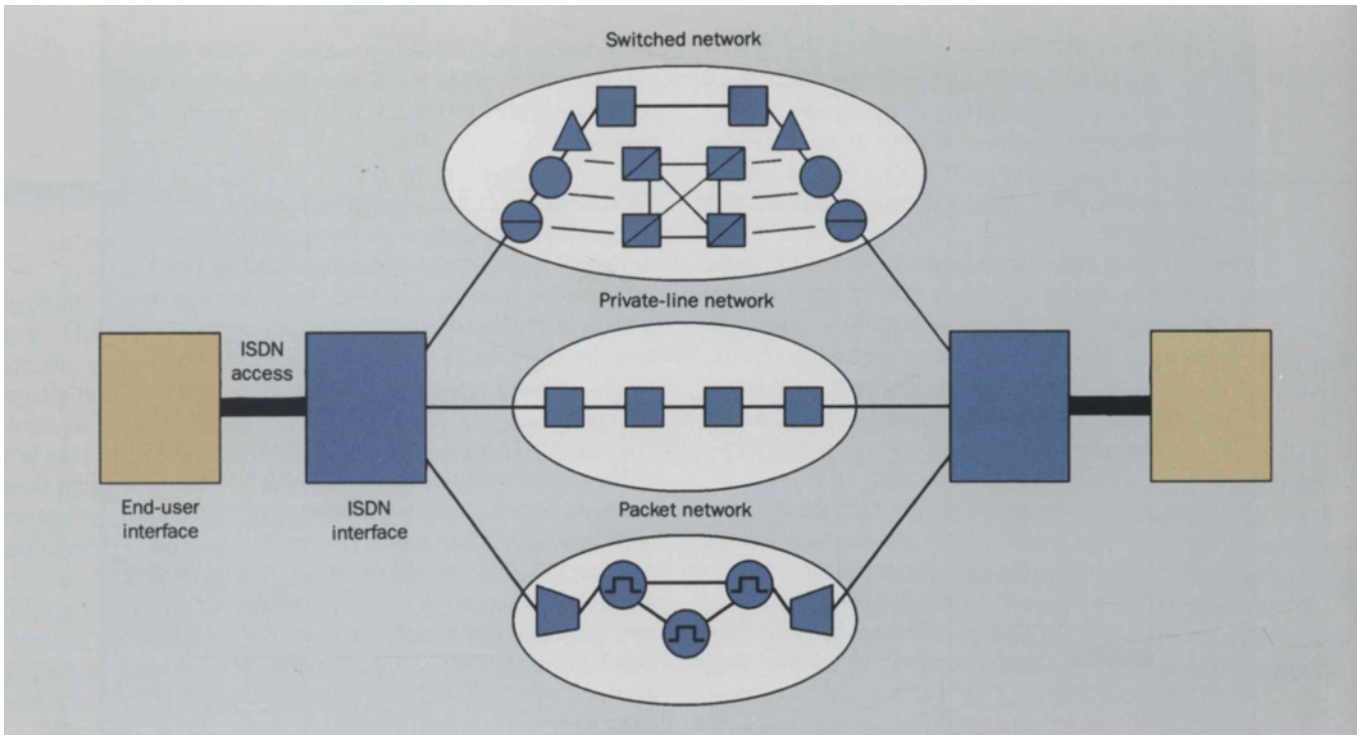

Figure 1. Conceptual view of the Integrated Services Digital Network.

remain the same. Only the applications programs within them are changed.

In the same way, new services have been provided by private networks through the use of out-of-band signaling to allow effective processor-to-processor communications. The Distributed Communications System (DCS) of AT&T Information Systems allows PBXs to share data bases and present to the end user the image of one integrated PBX as opposed to a network of multiple independent ones. Prior to this interprocessor communications capability, a user on a specific PBX could exercise the full range of capabilities (calling party identification, distinctive ringing, call forwarding, etc.) only if both parties were on the same PBX. With DCS the information as to who is placing the call, where the attendant is located, etc., can be sent from PBX to PBX in a separate signaling channel and the users are shielded as to the details of the private network architecture and deployment.

The next step in the evolution in private networks has been to expand the use of out-of-band signaling to elements outside of the core network: hosts, terminals (data and voice), and workstations. The specific interfaces found in AT&T's PBXs are the digital multiplexed interface (DMI) for host interconnection and the data communications protocol (DCP) for terminal or workstation interconnection. DMI and DCP allow efficient multiplexed access and signaling for both basic and advanced communications capabilities supporting voice and data applications.

The unresolved problem is that even though this robust processor-to-processor communications capability exists in common user networks and in private networks, these are islands unto themselves. When combined, they are constrained to operate with each other over conventional, limited, in-band communications channels. A major thrust of ISDN is to achieve full distributed processing capability by extending the separate processor-to-processor signaling and communications links to include private-to-shared-network interfaces. When implemented this would complete the last gap in an overall distributed communications architecture.

Authorized licensed use limited to: University of South Florida. Downloaded on October 08,2024 at 19:49:55 UTC from IEEE Xplore. Restrictions apply.

ISDN Conceptual View

ISDN has two fundamental roles. One is to provide fully digital interconnectivity for sophisticated voice and data applications. The other is to support and advance the distributed processing capability in a communications environment.

One could implement ISDN as a single, all-encompassing digital network with one integrated transport and switching fabric. The problem with this approach is the impracticality of replacing all of today's multi-billion-dollar communications infrastructure with this single integrated digital network. The conceptual view that has unlocked the door to achieving ISDN is to realize that from the point of view of the end user, access to a series of otherwise independent special-purpose digital networks (e.g., circuit, private line, packet, wideband) is an effective first step. That is, as long as a user has this integrated network access, the network itself can be implemented in a variety of ways, all of which would be invisible to the user. The resulting concept is shown in Figure 1. Multiple, independent overlay networks (of which three are illustrated here) are linked together at a common interface point which provides the integrated access to the end user. If this interface is defined and standardized, then network providers and end users can implement and evolve their respective subnetworks independently and still ensure compatibility. To the end user, the realization of the network is immaterial since the network capabilities are defined through the interface. Thus a focus on understanding ISDN becomes a focus on understanding ISDN access.

ISDN access defines a completely digital interface subdivided into channels of which there are two general types: B channels are those used only for customer information (voice, data, video); D channels are those used for sending signaling and control information across the interface. The signaling and control information manages the information-carrying channels. Thus the signaling is "out-of-band" rather than "in-band." The result of this approach has two main benefits: all the capacity in the information-bearing channels is available for customer use and the special signaling channel allows for robust distributed processing across the ISDN interface.

The International Telegraph and Telephone Consultative Committee (CCITT), an international agency of which the United States is a member, has been the principal forum for defining the technical details of ISDN. The committee has selected the fundamental digital rate building block as 64 kilobits per second (kb/s). Furthermore, the committee has defined two major interfaces (Figure 2): the basic-rate interface (BRI) and the primary-rate interface (PRI). The former is intended to serve information sources or sinks of relatively small capacity such as terminals. The latter is intended for large-capacity vehicles such as PBXs. Both have a similar structure—one D channel and a number of B channels. The basic-rate arrangement is 2B + D. The primary-rate one for North America and Japan is 23B + D and for Europe is 30B + D. (The difference reflects the underlying digital carriers used in these

Figure 2. Two major interfaces defined for ISDN: the basic-rate interface and the primary-rate interface.

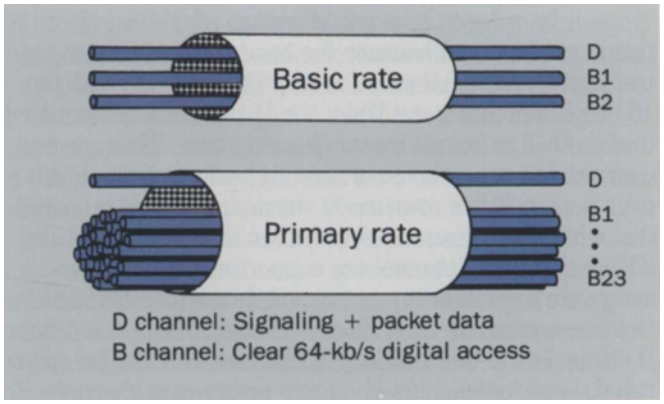

Authorized licensed use limited to: University of South Florida. Downloaded on October 08,2024 at 19:49:55 UTC from IEEE Xplore. Restrictions apply.

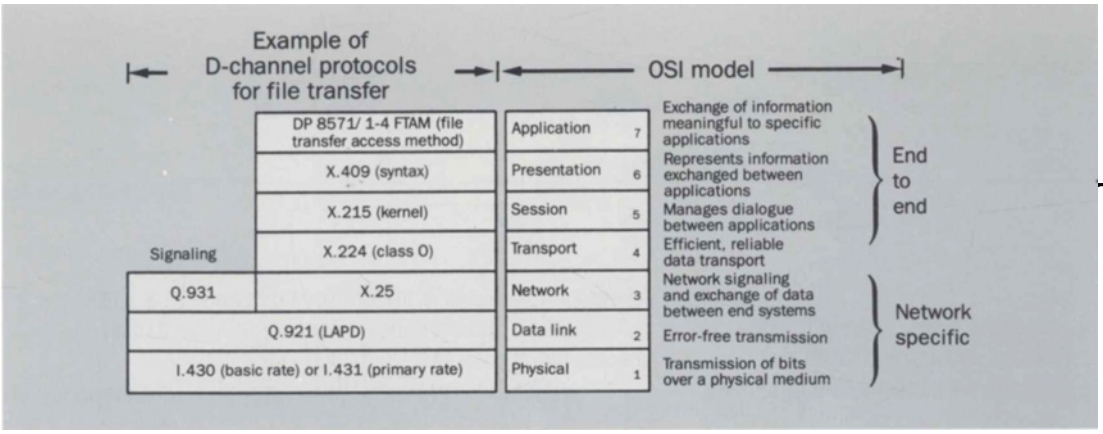

Figure 3. The open systems interconnect reference model and D channel protocols.

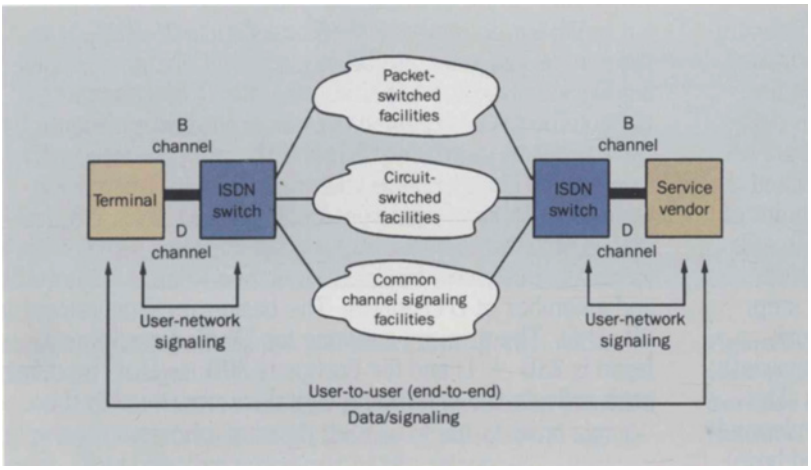

Figure 4. ISDN viewed as channelized interfaces between the network and customer premises equipment.

regions. Interworking between the two, by agreement, is at the 23B + D level.) The B channels are 64 kb/s each in both the primary and the basic rates. The D channel is 64 kb/s for the primary rate and 16 kb/s for the basic rate.

In order to take full advantage of the bandwidth that is available and because the bandwidth needed to transmit signaling information may often be less than the 16 or 64 kb/s that is available, the D channel has been further defined to be able to carry packet data. Thus, an end user would have a choice of sending packet information over B channels or over the D channel. It should be noted that while the conventional definition of a primary rate is 23B + D, one D channel can support a number of primary-rate interfaces (up to 40) and thus entire DS1-level facilities containing 24 B channels could be supported by a D channel on another facility. B channels can also be aggregated, in multiples of 64 kb/s, into higher-rate channels. To date the standardized arrangements are 64 kb/s (B channel), 384 kb/s (H0 channel), 1536 kb/s (H11 channel), and 1920 kb/s (H12 channel). International standards bodies defining these interfaces are planning for higher speed channels in the future.

Networking Protocols

In defining these channels, CCITT has specified not only the bit rate, but also the networking protocols to be used on the D channel for signaling and information transfer. Modern communications consists of a series of functions that must be performed in a particular order. Bits must be transmitted correctly, network addresses must be provided, dialogue must be carried out in an agreed-upon mode, common coding schemes must be employed, information must be represented in a standard fashion, and so on. In the past, different vendors implemented these functions in unique ways, thus inhibiting intersystem communications. To address this problem, the International Standards Organization (ISO) adopted the open systems interconnect (OSI) reference model (Figure 3). This takes the common communications functions found in all systems, defines them precisely, places them into a specific hierarchy, and then groups them into seven distinct layers. The interfaces between these layers are then rigorously defined in order

Authorized licensed use limited to: University of South Florida. Downloaded on October 08,2024 at 19:49:55 UTC from IEEE Xplore. Restrictions apply.

Figure 5. Generic architecture for the customer premises end of an ISDN interface.

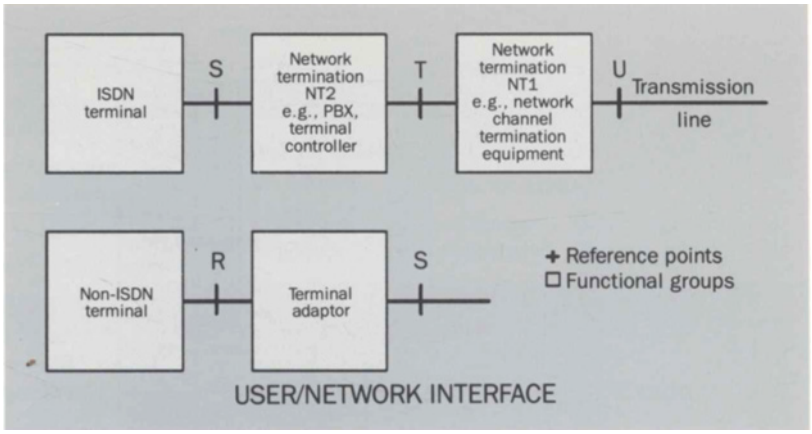

to allow different implementations of specific layers to work with each other.

The OSI reference model was the vehicle used by CCITT for defining the D channel protocols. ISDN is a network architecture and, as such, requires the network-specific, or first three, layers to be defined across the interface between customer premises equipment and the network. Q.921 defines the local access protocol for the D channel (LAPD). This is a link-layer protocol similar to that protocol defined for packet data in X.25 (LAPB), but allows for more than one logical link between the end points, whereas LAPB allows only one. In those cases where the D channel carries X.25 data along with signaling, LAPD is used for both with one logical link within the D channel devoted to signaling and one to X.25.

One can take the basic transport that is defined by ISDN and then add above it particular applications following the OSI reference model. For example, if the application were file transfer per the procedures defined by CCITT, then the suite of protocols that would be used are as shown in Figure 3. The physical layer is the appropriate one for the basic primary interface. The data link layer is Q.921 subdivided into two logical channels as discussed earlier. Two network layer protocols are required: one for the circuit signaling on the D channel to support the B channels, Q.931, and one for the data transfer mode with the D channel itself, X.25. The fourth is the transport layer defined to interwork with X.25. The fifth, sixth, and seventh layers are the file transfer access method (FTAM) layers.

Thus, the basic concept of ISDN as shown in Figure 4 is a channelized interface between the network and customer premises equipment, be it a PBX, integrated voice/data terminal, data terminal, or voice phone. A single interface is divided into a discrete number of channels in multiples of 64 kb/s (with the exception of the signaling channel within the basic-rate interface, which is 16 kb/s). There are two broad types of channels—one for information transfer, the B channel, and one for signaling, the D channel. Customer premises equipment and the network communicate with each other over the D channel in order to set up communications links through the B channels. The network uses this information in the signaling link along with its own signaling infrastructure to set up connections across the network. And, finally, when the links are established, user information is sent over the ISDN access through the B channels. The information is sent into the network in digital form. It can be data; it can be voice; it can be video. The network, depending on its own implementation, would then take information sent to it on these B channels and, if necessary, convert it to other formats, transport it across the network and deliver it to the other end.

ISDN Architecture

A generic architecture for the customer premises end of an ISDN interface has been defined by CCITT and is illustrated in Figure 5. Four reference-point interfaces (R, S, T, and U) are defined along with broad groupings of functionality involving network terminations and terminals, both ISDN and non-ISDN. These reference points are defined such that, except for the R interface, the separated signaling channel is maintained throughout. Details of this architecture and the current status of the reference point interface standards are discussed in "ISDN Standards Evolution" by H. Aldermeshian, page 19.

Figure 6 illustrates a generic architecture on the network side of the ISDN interface. The integrated, channelized access interface first must have its components separated and diverted to their appropriate functions. B channels which are to be circuit-switched must be routed

Authorized licensed use limited to: University of South Florida. Downloaded on October 08,2024 at 19:49:55 UTC from IEEE Xplore. Restrictions apply.

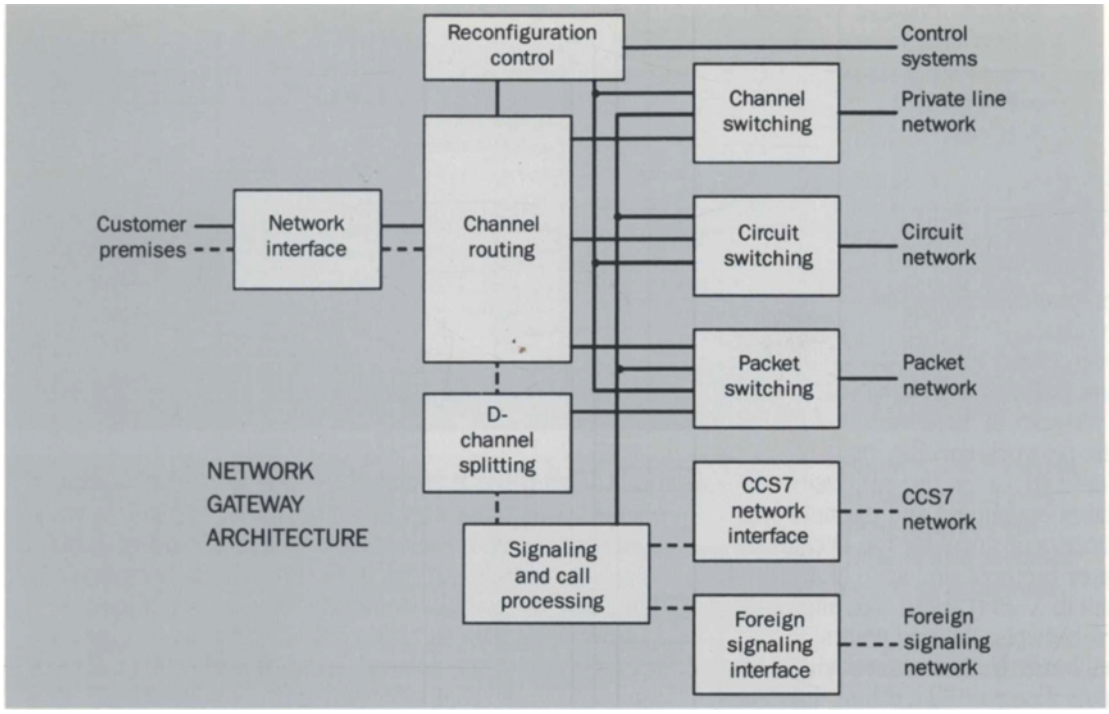

Figure 6. Generic architecture for the network side of the ISDN interface.

to the circuit-switching function; B channels which are private lines must be routed to the function that provides the entry to the private line environment; B channels which are, in reality, X.25 access lines must be routed to an X.25 packet-switching function. Since the D channel can contain both signaling and data, it first must be "split" into its logical subparts following the level 2 LAPD protocol cited earlier. The X.25 data channel is routed to the packet-switching function; the signaling information is routed to a call-processor function. The call processor, in turn, communicates with the switching functions, instructing them, when necessary, as to what actions to take. If signaling through the network is required, the appropriate protocols are followed and the necessary signaling information is passed to a function which interfaces to the signaling network. Given the new, divested environment in North America and the presence of multiple carriers, it is likely that a distinction will have to be made between signaling within networks owned and operated by a single network operator and signaling to networks owned and operated by others.

In spite of the focus of ISDN being on the access between the customer premises and the network, an overall network (public and private) architecture is needed to implement an ISDN. Figure 7 shows an overall architecture comprising four areas: end points, premises switches (e.g., PBXs), exchange carrier networks, and interexchange networks.

There are four basic types of ISDN end points. There are host interfaces at either the basic or the primary rate. Here, in addition to advanced capabilities provided by ISDN, significant savings are achieved by multiplexing multiple channels into a single interface. There are integrated workstations which are ISDN-specific devices that have both voice and data capabilities. There are voice terminals where the data capabilities are minor and are specific to the support of voice. (For example, a digital display would be used to show the name or telephone number of a calling party. The data would originate in the calling party's switch, would be transmitted through the network, would come over the D channel between the voice terminal and the network switch, and would be displayed at the terminal. This is data transfer but it is to support a particular voice service.) Finally, in ISDN it is recognized that there is a large infrastructure of existing data terminals that are not ISDN-compatible. Therefore, in defining ISDN it is recognized that it is necessary to have data terminal adapters which, when combined with voice

Authorized licensed use limited to: University of South Florida. Downloaded on October 08,2024 at 19:49:55 UTC from IEEE Xplore. Restrictions apply.

IPR2025-00395
Petitioners' Exhibit 1022
Page 8 of 13

terminals and existing data terminals, would provide an ISDN arrangement. These adapters would most likely be built into voice sets and the terminals would, in turn, be plugged into those sets, providing a complete ISDN solution.

The premises switch environment is dominated by digital PBXs (Figure 8a). ISDN interfaces must exist on both sides of the digital PBX: primary- and basic-rate interfaces to hosts and terminals on the line side and to public and private networks on the trunk side. The connections between PBXs could be switched through a common carrier switched network, could be direct private lines with no intermediate switching, or could be privately owned nonswitched lines. All would be accommodated with ISDN interfaces.

As discussed earlier, the digital PBX family of AT&T has had ISDN-like interfaces for a number of years at both the primary and the basic rates (see "The Role of ISDN in AT&T Information Systems Architecture," by J. L. Neigh and L. A. Spindel, page 45). The primary-rate equivalent is the bit-oriented signaling (BOS) of DMI. The basic-rate equivalent is DCP. Both are ISDN-like in that they are channelized interfaces that rely on out-of-band signaling in a separate channel in order to control the information-bearing channels. Neither follow the exact CCITT recommendations because at the time that development on them proceeded, those recommendations were in preliminary form. The DMI-BOS interface, as it stands today, consists of a DS1 line with 23 information-carrying channels of 64 kb/s each and one signaling channel that uses a bit-oriented signaling scheme. The DCP interface is a three-channel interface where two are information-bearing ones at 64 kb/s each and the third is a signaling channel at 8 kb/s. The evolutionary path of both of these interfaces is to the primary and basic rate interfaces defined by CCITT.

Even in their current form, however, they will provide interworking with ISDN. For example, applications using a DCP terminal will be able to communicate through an AT&T PBX over an ISDN network. The PBX will transform the DCP protocols to the standardized ISDN ones and vice versa.

Figure 7. Overall ISDN architecture consisting of four basic components.

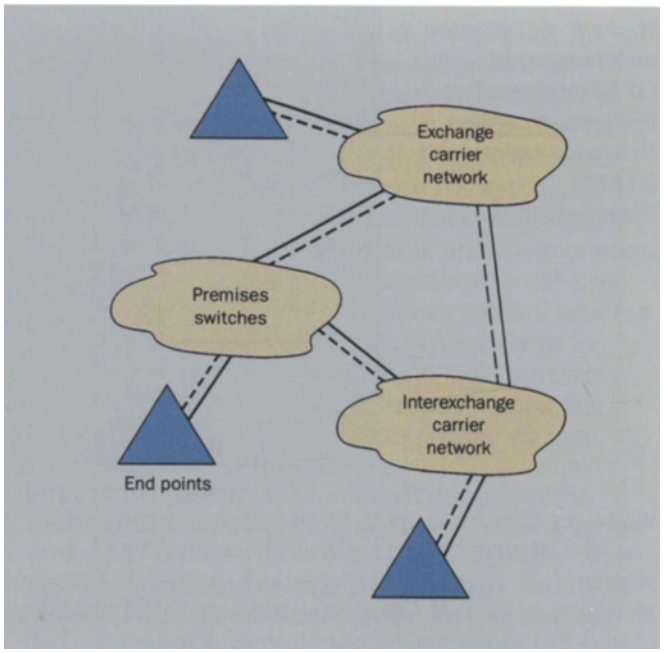

The exchange carrier ISDN is dominated by the local exchange switch (Figure 8b). As with PBXs, both terminals and hosts are supported with the basic-rate and primary-rate interfaces (see "Planning for ISDN in the 5ESS™ Switch," by D. L. Carney and E. M. Prell, page 35). There is also a primary interface to on-premises PBXs as illustrated before. Since the central office switch is the gateway to the exchange carrier, there are four major non-ISDN network interfaces: channel (or private line) networks, circuit-switched networks, X.25 packet networks, or common channel signaling (CCS) networks. An ISDN-compatible interface to interexchange carriers is also required.

Whereas AT&T provides products for end systems, premises switches, and exchange carrier networks,

Authorized licensed use limited to: University of South Florida. Downloaded on October 08,2024 at 19:49:55 UTC from IEEE Xplore. Restrictions apply.

IPR2025-00395
Petitioners' Exhibit 1022
Page 9 of 13

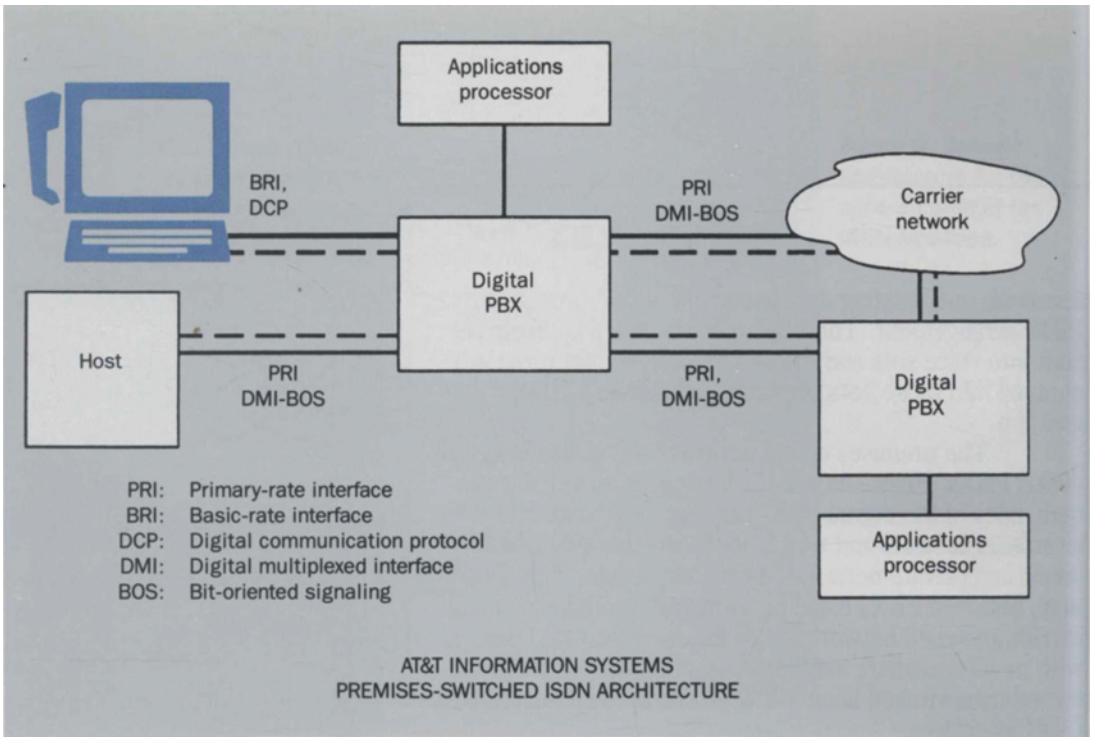

Figure 8. Coordinated architectures of (a) AT&T Information Systems, (b) AT&T Network Systems, and (c) AT&T Communications.

it also provides services as an interexchange carrier (see "AT&T Communications ISDN Architecture," by M. L. Higdon, J. T. Page, and P. Stuntebeck, page 27). Thus, an architectural view of AT&T interexchange ISDN capability (Figure 8c) shows functionality instead of systems. There is, as with the exchange carrier, a major ISDN interface, the service node, that interconnects the customer premises to the AT&T network either switched through an exchange carrier or directly. Unlike previous cases where connection from terminals was of major interest, here the focus is on the connection between the service node and the vehicles that aggregate traffic such as PBXs or multiplexers. As with the exchange carriers, there are four supporting non-ISDN networks: channel, circuit, X.25 packet, and common channel signaling. AT&T Communications adds to this its capabilities in two major areas. First, there are network application processors that operate off the common channel signaling network and that provide a range of services, such as Advanced 800 service or Software-Defined Network service. Second, there are the sophisticated customer control and reconfiguration capabilities that allow for dynamic reconfiguration of the private line networks. The two of these, combined with ISDN, provide the distributed processing architecture and are focused at giving the end users as much control over their applications as possible.

When the first stage in implementing ISDN is completed, there will exist an overall network architecture based on these ISDN interfaces. Central office and premises-based switches, public and private networks, applications processors and workstations, and hosts will work together within this distributed arrangement. The foundation will be out-of-band signaling first introduced with common channel signaling; expanded in DCS, DMI-BOS, and DCP; and, finally, completed with ISDN.

ISDN Applications

As mentioned previously, there already exist in the marketplace PBX-based services built around ISDN-like interfaces. These involve calling party identification, call management (hold, transfer, etc.), attendant services, multiplexed access to hosts, integrated voice and data terminals, and the like. In these areas, ISDN will extend these capabilities to the central office environment and provide a level of standardization and multivendor compatibility unknown today. The existence of the PRI will allow

Authorized licensed use limited to: University of South Florida. Downloaded on October 08,2024 at 19:49:55 UTC from IEEE Xplore. Restrictions apply.

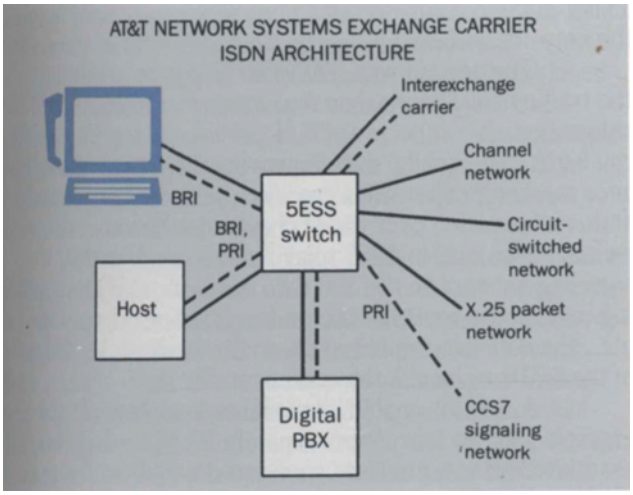

for wideband switching on demand at 384 kb/s and 1536 kb/s. The separate signaling channel will provide for extending features such as calling party identification to the entire network. Subsequent articles will discuss various service examples built around these capabilities and others. In this section we will examine one specific application and illustrate how the introduction of ISDN-based distributed processing leads to superior price/performance ratios and a resulting competitive advantage for the user.

As an example, let us consider a national business concern that wishes to deal with the public at large for order entry, status, and information. In today's environment, incoming calls arrive at the business' nationwide network of automatic call distributors (ACDs) via local, foreign exchange (FX) or toll calls (the latter usually being toll-free to the caller), or 800 calls. Attendants at the ACDs have terminal access to computers providing service or product information through a separate network. Once the call has arrived at the attendant, and after the attendant has collected the necessary preliminary information

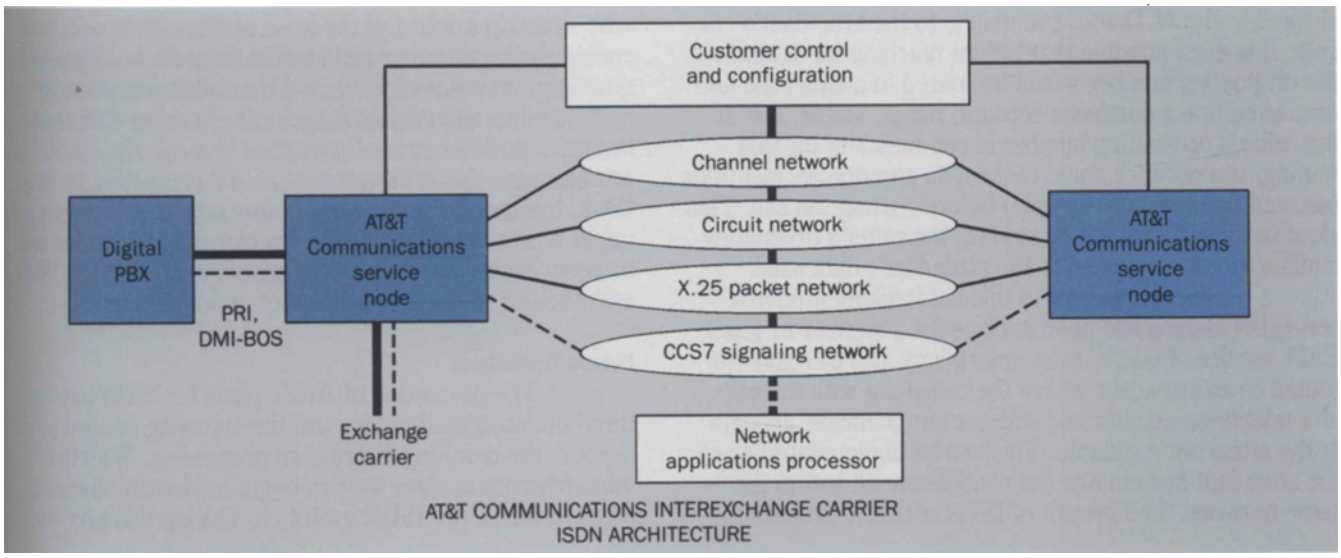

Authorized licensed use limited to: University of South Florida. Downloaded on October 08,2024 at 19:49:55 UTC from IEEE Xplore. Restrictions apply.

from the caller, the proper data can be requested through the computer network. If for some reason the attendant cannot serve a specific account, the caller must be rerouted to an attendant who can. Given fluctuations in traffic, peak loads cause overloading at some of the ACDs. The common way of partially correcting this problem is to provide backbone trunking between the ACDs to manage the overflow. This is only a partial solution for two reasons. The corrective measures take place only after the problem (traffic congestion) has occurred and the correction is, therefore, only partial. Moreover, the transmission quality of this two-part arrangement (network and backbone) is inferior to an integrated arrangement.

ISDN can help in two ways. First of all, it can provide additional information so that the proper attendants are chosen and the proper records are made available when the call arrives. The easiest additional information to provide is the caller's telephone number. The originating switch would send it to the terminating one via a common channel signaling network. It would then be sent, along with the incoming call signaling information via the D channel to the ACD and, eventually, to the attendant's console. It is even possible that before reaching the attendant, the originating number would be routed to a data base and translated into a customer account, name, status, etc. If the caller's originating number is not sufficient for this routing, the network could request an appropriate identifier (account number, for example) before routing the call. This identifier along with, or instead of, the caller's originating number would be passed to the attendant's data base.

(A service similar to this but implemented in a non-ISDN fashion has been in place for a number of years, E911 service. Callers, in an emergency, dial 911 and are routed to an attendant where the call along with the caller's telephone number and address automatically appears at the attendant's console. This can be implemented since the attendant system and the console are all within the same network. The benefit of ISDN is that it extends the ability of the communications processors to interact across the network boundary.)

The second way ISDN can help is by smoothing the traffic flow. Rather than manage the unbalanced congestion after it occurs, ISDN provides a way in which it can be shared equally, thus improving the system performance markedly. The ACDs can, on a periodic basis, send status information over the D channel to the network switch which can, in turn, relay this information over the signaling network to the 800 data base. In addition to routing calls on the basis of time of day, point of origination, etc., the data base would route on the basis of the ability of the ACDs to handle the current traffic load.

A specific customer model was analyzed for an example such as this. Approximately 10 ADCs and their associated attendants were configured with both the pre-ISDN and ISDN arrangements discussed above. Actual traffic loads experienced in the field in situations such as this were applied and the response time and call abandonments were examined. The ISDN solution showed a marked improvement over the pre-ISDN one. In the specific situation studied, if the level of attendants were kept constant, the response time would be reduced to one-quarter of its original value and the call abandonments decreased by an order of magnitude. In doing this, the business would keep costs constant and use the ISDN arrangement to increase revenues. In alternative applications, the opposite might be appropriate. That is, the user might wish to keep the level of performance constant and, by reducing the number of attendants needed in the ISDN architecture, decrease the cost of providing this level.

Future Directions

The discussion of AT&T plans for ISDN has centered on integrated access and the signaling needed to support the resulting distributed processing. With that infrastructure in place we can begin to identify the next steps in the AT&T ISDN evolution. During this process,

Authorized licensed use limited to: University of South Florida. Downloaded on October 08,2024 at 19:49:55 UTC from IEEE Xplore. Restrictions apply.

IPR2025-00395
Petitioners' Exhibit 1022
Page 12 of 13

there will be compatibility at all levels, made possible by adherence to internationally accepted standards.

These steps in ISDN will accommodate the need for higher bandwidth and larger capacity. Higher bandwidths, of the order of 25 to 50 Mb/s, will arise from rapid and nearly universal high-speed fiber deployment. This higher bandwidth will accommodate high-quality video transmission and large data transfer.

As discussed previously, ISDN will allow access to today's multiple networks on a call-by-call basis using common access facilities. The integration of these functions to allow full flexibility requires a general-purpose network with a single fabric that can support all transport modes (circuit, channel, and packet). AT&T's wideband packet technology is capable of supporting virtual circuits, virtual channels, and individual packets. It also has a bandwidth capacity to handle the multiple service requirements of voice, data, and image. Larger capacity, using this wideband packet transport, will give customers greater capability and flexibility even with their existing bandwidth.

Two fundamental networking principles—networks based on distributed intelligence and open system interfaces—are critical to meeting future customer needs in advanced communications applications. Elements of this architecture are already in place in central office and premises-based networks. The upcoming ISDN offerings are the next logical step in the evolution of this architecture.

Acknowledgments

There have been a large number of people within AT&T who have contributed to the concept, standardization, and implementation of ISDN. It is their work that is reflected here and acknowledged. Special mention should be made of George C. Varvaloucas and James C. Frauenthal, whose modeling and analysis resulted in the example discussed at the end of this article.

(Manuscript received October 2, 1985)

Authorized licensed use limited to: University of South Florida. Downloaded on October 08,2024 at 19:49:55 UTC from IEEE Xplore. Restrictions apply.

IPR2025-00395
Petitioners' Exhibit 1022
Page 13 of 13