US011661219B2

(12) **United States Patent**
Tomes et al.

(10) **Patent No.: US 11,661,219 B2**
(45) **Date of Patent: *May 30, 2023**

(54) **CATHETER TRAY, PACKAGING SYSTEM, INSTRUCTION INSERT, AND ASSOCIATED METHODS**

(71) Applicant: **Medline Industries, LP**, Northfield, IL (US)

(72) Inventors: **Jennifer E. Tomes**, Mundelein, IL (US); **Sarah Dickinson**, Chicago, IL (US); **Deborah Adler**, New York, NY (US); **Jack Maze**, Long Grove, IL (US); **Alberto Savage**, Buffalo Grove, IL (US); **Kenneth Chua**, Glenview, IL (US); **Earl Wilson**, Ingleside, IL (US); **John Kutsch**, Harvard, IL (US)

(73) Assignee: **Medline Industries, LP**, Northfield, IL (US)

(*) Notice: Subject to any disclaimer, the term of this patent is extended or adjusted under 35 U.S.C. 154(b) by 433 days.

This patent is subject to a terminal disclaimer.

(21) Appl. No.: **16/833,575**

(22) Filed: **Mar. 28, 2020**

(65) **Prior Publication Data**

US 2020/0223571 A1 Jul. 16, 2020

Related U.S. Application Data

(60) Continuation of application No. 15/684,787, filed on Aug. 23, 2017, now Pat. No. 10,640,243, which is a (Continued)

(51) **Int. Cl.**
B65B 11/00 (2006.01)
A61M 25/00 (2006.01)
(Continued)

(52) **U.S. Cl.**
CPC ***B65B 11/00*** (2013.01); ***A61B 50/30*** (2016.02); ***A61B 50/33*** (2016.02); ***A61M 25/00*** (2013.01);
(Continued)

(58) **Field of Classification Search**
CPC . A61B 50/30; A61B 50/33; A61B 2050/3008; A61M 25/00; A61M 25/002;
(Continued)

(56) **References Cited**

U.S. PATENT DOCUMENTS

2,659,485 A 11/1953 Duley et al.
2,715,296 A 8/1955 Petit
(Continued)

FOREIGN PATENT DOCUMENTS

CA 6012586 1/2000
CN 201823147 5/2011
(Continued)

OTHER PUBLICATIONS

"Final Written Decision", IPR 2019-00035; U.S. Pat. No. 9,745,008; Entered Apr. 8, 2020.
(Continued)

Primary Examiner — Adam Marcetich
(74) *Attorney, Agent, or Firm* — Philip H. Burrus, IV

(57) **ABSTRACT**

A tray (**100**) for accommodating a coiled medical device, such as a catheter assembly (**700**), includes a first compartment (**101**), a second compartment (**102**), and a third compartment (**103**). The catheter assembly (**700**) and devices associated with a catheterization procedure, such as syringes (**701**,**702**) containing sterile water and lubricating jelly and a specimen container (**703**) can be disposed within the tray. Printed instructions (**1001**) can be included with the tray (**100**). One or more layers of wrap material (**2200**) can be folded about the tray (**100**) to enclose the tray (**100**) and
(Continued)

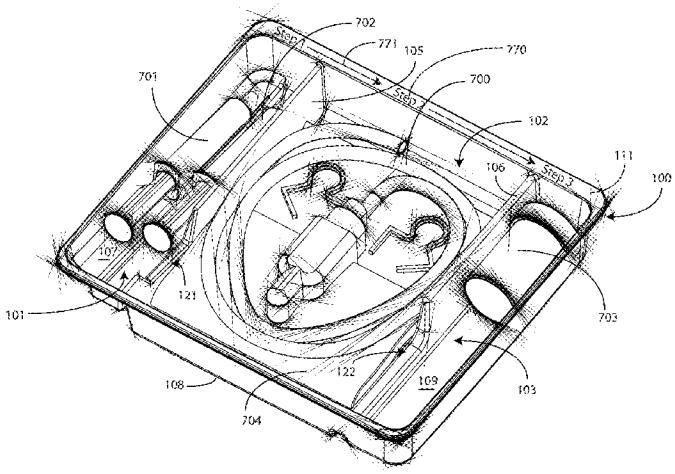

other items, such as an additional layer of wrap material (**2701**), packaged liquid hand sanitizer (**2401**), and packaged gloves (**2402**). When a health care services provider (**3101**) unfolds the wrap material, the same can be used to create a sterile field beneath a patient (**3201**).

20 Claims, 35 Drawing Sheets

Related U.S. Application Data

continuation of application No. 14/793,455, filed on Jul. 7, 2015, now Pat. No. 9,745,088, which is a continuation of application No. 13/860,902, filed on Apr. 11, 2013, now Pat. No. 9,522,753, which is a division of application No. 13/155,026, filed on Jun. 7, 2011, now Pat. No. 8,448,786, which is a continuation-in-part of application No. 13/153,265, filed on Jun. 3, 2011, now Pat. No. 9,795,761, and a continuation-in-part of application No. 13/153,300, filed on Jun. 3, 2011, now abandoned, which is a continuation-in-part of application No. 12/647,515, filed on Dec. 27, 2009, now abandoned, and a continuation-in-part of application No. 12/495,148, filed on Jun. 30, 2009, now Pat. No. 8,631,935.

(60) Provisional application No. 61/437,796, filed on Jan. 31, 2011, provisional application No. 61/428,944, filed on Dec. 31, 2010, provisional application No. 61/352,155, filed on Jun. 7, 2010, provisional application No. 61/352,140, filed on Jun. 7, 2010, provisional application No. 61/183,629, filed on Jun. 3, 2009.

(51) **Int. Cl.**

A61B 50/30	(2016.01)
A61B 50/33	(2016.01)
A61M 5/00	(2006.01)
A61B 42/00	(2016.01)
A61B 46/00	(2016.01)

(52) **U.S. Cl.**
CPC ***A61M 25/002*** (2013.01); *A61B 42/00* (2016.02); *A61B 46/00* (2016.02); *A61B 2050/3008* (2016.02); *A61B 2050/3015* (2016.02); *A61J 2205/40* (2013.01); *A61J 2205/50* (2013.01); *A61L 2202/18* (2013.01); *A61L 2202/182* (2013.01); *A61M 5/002* (2013.01); *A61M 25/0017* (2013.01); *A61M 2209/06* (2013.01)

(58) **Field of Classification Search**
CPC A61M 5/002; A61M 25/0017; A61M 2209/06; A61J 2205/50; B65B 11/00; A61L 2202/18; A61L 2202/182
See application file for complete search history.

(56) **References Cited**

U.S. PATENT DOCUMENTS

2,781,611 A 2/1957 West
2,886,316 A 5/1959 Ayala
2,947,415 A 8/1960 Garth
2,954,642 A 10/1960 Roderick
2,959,891 A 11/1960 Barnett et al.
3,013,656 A 12/1961 Murphy, Jr.
3,107,786 A 10/1963 Adelman
3,133,635 A 5/1964 Morris
3,166,189 A 1/1965 Disston
3,315,802 A 4/1967 Maro
3,329,261 A 7/1967 Serany, Jr. et al.
D209,641 S 12/1967 Goldberg
3,379,339 A 4/1968 Asenbauer
3,485,352 A 12/1969 Pilger
D218,077 S 7/1970 Gabriel
3,542,019 A 12/1970 Gittins
3,650,393 A 3/1972 Reiss
3,726,281 A 4/1973 Norton
3,770,119 A 11/1973 Hultberg et al.
3,851,649 A 12/1974 Villari
D234,404 S 2/1975 Merril
3,901,235 A 8/1975 Patel et al.
D237,315 S 10/1975 Nowkowski
D237,317 S 10/1975 Nowkowski
3,965,900 A 6/1976 Boedecker
3,967,728 A 7/1976 Gordon et al.
3,976,195 A 8/1976 Cohen
3,978,983 A 9/1976 Brezetta
D242,654 S 12/1976 Rawls
3,998,221 A 12/1976 Collins
D243,798 S 3/1977 Swartz
4,011,944 A 3/1977 Cooley
4,053,280 A 10/1977 Salisbury
4,075,782 A 2/1978 Neuschatz
4,085,845 A 4/1978 Perfect
D248,871 S 8/1978 Forsman et al.
D249,362 S 9/1978 Forsman et al.
4,140,127 A 2/1979 Ciani et al.
4,160,505 A 7/1979 Rauschenberger
4,170,300 A 10/1979 Pick
4,226,328 A 10/1980 Beddow
4,266,669 A 5/1981 Watson
4,269,310 A 5/1981 Uson
4,282,678 A 8/1981 Tsui
4,307,539 A 12/1981 Klein
D262,995 S 2/1982 Gaba et al.
4,334,537 A 6/1982 Peterson
D268,130 S 3/1983 Easton
4,411,656 A 10/1983 Cornett
4,439,184 A 3/1984 Wheeler
4,458,705 A 7/1984 Cawood
4,460,360 A * 7/1984 Finegold A61M 25/00 604/288
D275,886 S 10/1984 Sheward et al.
D276,462 S 11/1984 Villarreal
D277,508 S 2/1985 Clair
4,501,363 A 2/1985 Isbey, Jr.
4,523,679 A 6/1985 Paikoff et al.
4,530,349 A 7/1985 Metzger
D280,663 S 9/1985 Albon et al.
D280,933 S 10/1985 McLaughlin
D280,993 S 10/1985 Mariol
4,554,156 A * 11/1985 Fischer A61L 26/0052 514/704
D283,051 S 3/1986 Fichera
D287,760 S 1/1987 Discko, Jr.
4,761,008 A 8/1988 Huggins
4,767,008 A 8/1988 Warnecke et al.
4,795,441 A 1/1989 Bhatt
4,811,847 A 3/1989 Reif
4,828,113 A 5/1989 Friedland
4,844,259 A 7/1989 Glowczewskie et al.
4,858,821 A 8/1989 Bickelhaupt
4,925,448 A 5/1990 Bazaral
4,928,830 A 5/1990 Brewer
D310,896 S 9/1990 Winjum
4,991,877 A 2/1991 Lieberman
5,007,535 A 4/1991 Meseke et al.
5,024,326 A 6/1991 Sandel et al.
5,031,768 A 7/1991 Fischer
5,094,621 A 3/1992 Friedel
5,163,557 A 11/1992 Sokolowski
5,170,804 A 12/1992 Glassman
5,197,885 A 3/1993 Friedel
D334,973 S 4/1993 Valentine et al.
D337,830 S 7/1993 Coyne et al.
5,232,369 A 8/1993 Mavrikis

(56) **References Cited**

U.S. PATENT DOCUMENTS

5,242,398 A 9/1993 Knoll et al.
5,244,394 A 9/1993 Serabian-Musto
D343,687 S 1/1994 Houghton et al.
5,289,919 A 3/1994 Fischer
5,312,287 A 5/1994 Chuang
5,314,339 A 5/1994 Aponte
5,318,543 A 6/1994 Ross et al.
5,324,201 A 6/1994 Friedel
5,339,955 A * 8/1994 Horan A61B 50/33 206/370
D351,661 S 10/1994 Fischer
5,392,918 A 2/1995 Harrison
5,411,437 A 5/1995 Weber et al.
5,487,566 A 1/1996 Hedge, Jr.
D380,272 S 6/1997 Partika et al.
5,665,945 A 9/1997 Oshima
D387,177 S 12/1997 Davis
D387,559 S 12/1997 Williamson
5,713,778 A 2/1998 Rodeosevich et al.
5,720,502 A 2/1998 Cain
5,778,574 A 7/1998 Reuben
5,779,053 A 7/1998 Partika
5,795,213 A 8/1998 Goodwin
5,810,738 A 9/1998 Thomas, II
5,820,441 A 10/1998 Pracas
5,827,262 A 10/1998 Neftel et al.
5,829,790 A 11/1998 Phillips
5,872,262 A 2/1999 Dolle, III et al.
5,887,749 A * 3/1999 Schommer A47G 19/02 220/575
5,931,303 A 8/1999 Salvadori
5,941,241 A 8/1999 Weinstein et al.
5,947,284 A 9/1999 Foster
5,954,369 A 9/1999 Seabrook
5,975,295 A 11/1999 Diamond
6,004,136 A 12/1999 Ehrenpreis
6,012,586 A 1/2000 Misra
6,068,121 A 5/2000 McGlinch
6,089,943 A 7/2000 Lo
6,142,152 A 11/2000 Gawarecki
6,158,437 A 12/2000 Vagley
6,159,017 A 12/2000 Coomansingh
D442,697 S 5/2001 Hajianpour
D450,130 S 11/2001 Goldstein
D450,391 S 11/2001 Hunt et al.
6,330,427 B1 12/2001 Tabachnik
6,361,396 B1 3/2002 Snyder et al.
6,382,212 B1 5/2002 Borchard
6,405,863 B1 6/2002 Dhindsa
6,454,097 B1 9/2002 Blanco
6,579,271 B1 6/2003 Aruffo et al.
6,659,506 B1 12/2003 Erisalu
6,681,933 B1 1/2004 Demsien et al.
6,769,546 B2 8/2004 Busch
D495,491 S 9/2004 Ramirez
6,793,078 B2 9/2004 Roshdy
6,840,379 B2 1/2005 Franks-Farah et al.
6,896,141 B2 5/2005 McMichael et al.
6,915,901 B2 7/2005 Feinberg
6,926,708 B1 8/2005 Franks-Farah et al.
6,948,742 B2 9/2005 Buck
7,048,120 B2 5/2006 Pond
7,066,328 B2 6/2006 Pulsifer
D530,920 S 10/2006 Snell
D547,064 S 7/2007 Snell
D549,454 S 8/2007 Ahman
7,264,869 B2 9/2007 Tobita
7,278,987 B2 10/2007 Solazzo
D557,047 S 12/2007 Dretzka
D561,473 S 2/2008 Phillips et al.
D563,673 S 3/2008 Dretzka
7,401,703 B2 7/2008 McMichael
7,434,687 B2 10/2008 Itou et al.
D579,662 S 11/2008 Dretzka
D590,596 S 4/2009 Dretzka
D596,311 S 7/2009 Antons
7,624,869 B2 12/2009 Primer
D609,819 S 2/2010 Tomes et al.
D612,153 S 3/2010 Liao
7,785,312 B2 8/2010 Thorne
D623,765 S 9/2010 Tomes et al.
7,789,873 B2 9/2010 Kubalak
D636,894 S 4/2011 Tomes et al.
D638,137 S 5/2011 Gross et al.
D650,912 S 12/2011 Tomes et al.
D662,218 S 6/2012 Pittman
8,448,786 B2 5/2013 Tomes et al.
D688,461 S 8/2013 Ambrefe et al.
8,628,549 B2 1/2014 To et al.
8,631,935 B2 1/2014 Tomes et al.
8,678,190 B2 3/2014 Tomes et al.
8,708,999 B2 4/2014 Hong et al.
D704,856 S 5/2014 Tomes et al.
D708,347 S 7/2014 Lober
D708,759 S 7/2014 Heyman et al.
D720,470 S 12/2014 Lober
D720,471 S 12/2014 Angel et al.
9,084,593 B2 7/2015 Yakel et al.
D742,028 S 10/2015 Hutchison
9,283,352 B2 3/2016 Tomes et al.
9,522,753 B2 12/2016 Tomes et al.
D779,082 S 2/2017 Andre et al.
9,693,756 B2 7/2017 Tomes
9,745,088 B2 8/2017 Tomes
D800,337 S 10/2017 Daines
9,795,761 B2 10/2017 Lockwood et al.
9,808,400 B2 11/2017 Tomes et al.
9,808,596 B2 11/2017 Tomes
D832,456 S 10/2018 Self
10,251,812 B2 4/2019 Tomes et al.
10,512,752 B2 12/2019 Tomes
10,640,243 B2 5/2020 Tomes et al.
10,946,169 B2 3/2021 Lockwood
10,946,992 B2 3/2021 Tomes
2002/0185406 A1 12/2002 Massengale
2003/0031995 A1 2/2003 Laura
2003/0038475 A1 2/2003 Stancil
2003/0075474 A1 4/2003 Moyer et al.
2003/0159966 A1 8/2003 McMichael et al.
2003/0159969 A1 8/2003 McMichael et al.
2004/0004019 A1 1/2004 Busch
2004/0031721 A1 2/2004 Mann
2004/0055919 A1 3/2004 Rowe et al.
2004/0161732 A1 8/2004 Stump
2004/0180822 A1 9/2004 Grafton
2004/0195145 A1 10/2004 Roshdy
2004/0238391 A1 12/2004 Pond
2005/0022822 A1 2/2005 Santilli
2005/0101905 A1 5/2005 Merry
2005/0228691 A1 10/2005 Paparo
2005/0241986 A1 11/2005 Massengale et al.
2005/0256453 A1 11/2005 Nagamatsu
2005/0285385 A1 12/2005 Bova
2006/0009742 A1 1/2006 Solazzo
2006/0011501 A1 1/2006 Itou
2006/0011506 A1 1/2006 Riley
2006/0029912 A1 2/2006 Kearby et al.
2006/0088355 A1 4/2006 Ribi
2006/0096877 A1 5/2006 Khajavi et al.
2006/0186010 A1 8/2006 Warnack
2006/0264822 A1 11/2006 Nagamatsu
2006/0271019 A1 11/2006 Stoller
2007/0026472 A1 2/2007 Prokash et al.
2007/0060908 A1 3/2007 Webster et al.
2007/0065792 A1 3/2007 Schubarth
2007/0084742 A1 4/2007 Miller et al.
2007/0088330 A1 4/2007 House
2007/0095699 A1 5/2007 Frieze
2007/0142786 A1 6/2007 Lampropoulos
2007/0161971 A1 7/2007 House
2007/0197998 A1 8/2007 Itou
2007/0203464 A1 8/2007 Green et al.
2007/0225687 A1 9/2007 House
2007/0299431 A1 12/2007 Jakubowski et al.

(56) **References Cited**

U.S. PATENT DOCUMENTS

2008/0116106	A1	5/2008	Lampropoulos et al.	
2008/0121553	A1	5/2008	Gobel	
2008/0125722	A1	5/2008	Hess	
2008/0221515	A1	9/2008	Nagamatsu	
2008/0249476	A1	10/2008	Bierman et al.	
2008/0281254	A1	11/2008	Humayun et al.	
2008/0283426	A1	11/2008	Primer et al.	
2008/0283433	A1	11/2008	Primer	
2009/0004055	A1	1/2009	Darrigrand et al.	
2009/0071854	A1	3/2009	Martin	
2009/0099531	A1	4/2009	Griesbach, III	
2009/0152160	A1	6/2009	Thompson et al.	
2009/0184026	A1	7/2009	Massengale et al.	
2009/0194453	A1	8/2009	Thorne et al.	
2009/0234346	A1	9/2009	McBride et al.	
2009/0236259	A1	9/2009	Hicks	
2009/0318783	A1	12/2009	Rohde et al.	
2010/0272669	A1*	10/2010	Malessa	A61P 17/00 264/161
2010/0274205	A1	10/2010	Morelli et al.	
2010/0307941	A1	12/2010	Tomes et al.	
2010/0307942	A1	12/2010	Tomes et al.	
2010/0311026	A1	12/2010	Tomes et al.	
2011/0017621	A1*	1/2011	Zoland	A61B 50/13 211/85.13
2011/0107494	A1	5/2011	Haines	
2011/0155599	A1	6/2011	Yakel et al.	
2011/0218520	A1*	9/2011	Andrich	A61M 25/0017 604/544
2011/0225726	A1*	9/2011	Dominguez	A61M 3/0287 4/650
2011/0232234	A1	9/2011	Lockwood et al.	
2011/0233079	A1	9/2011	Macinnes et al.	
2011/0284410	A1	11/2011	Lockwood	
2011/0290260	A1	12/2011	Tomes et al.	
2011/0290262	A1	12/2011	Tomes et al.	
2011/0297147	A1	12/2011	Lick et al.	
2012/0145589	A1	6/2012	Macinnes et al.	
2012/0267272	A1	10/2012	Agrawal	
2014/0110296	A1	4/2014	Terzibashian	
2017/0202699	A1	7/2017	Zani et al.	
2017/0216558	A1	8/2017	Hughett et al.	
2017/0368302	A1	12/2017	Brooks	
2019/0344044	A1	11/2019	Dickinson et al.	

FOREIGN PATENT DOCUMENTS

EP	2007/045943	4/2007
JP	2000281144	10/2000
JP	2002068309	3/2002
JP	2007-229520	9/2007
WO	2005/027767	3/2005
WO	2006/114466	11/2006
WO	2007/045943	4/2007

OTHER PUBLICATIONS

"Final Written Decision", IPR 2019-00036; U.S. Pat. No. 9,745,008; Entered Apr. 8, 2020.

"Final Written Decision", IPR 2019-00109; dated May 4, 2020; U.S. Pat. No. 9,795,761.

"Final Written Decision", IPR 2019-00208; U.S. Pat. No. 9,808,400; Entered Jun. 3, 2020.

"Final Written Decision", IPR 2019-00223; U.S. Pat. No. 9,808,596; Entered Jun. 3, 2020.

Pothier, Andrew , "Office Action", Canadian Application No. 2,837,289; dated Feb. 27, 2020.

Pothier, Andrew , "Office Action", Canadian Application No. 2822905; dated Feb. 27, 2020.

Medline Industries Inc. vs *C.R Bard. Inc.*, Exhibit G to Declaration of Dylan J. Raife in Support of Bard Opening Claim Construction Brief; Civil Action No. 1:16-cv-03529; Judge Sharon Johnson Coleman; Filed Nov. 11, 2016.

Chinese Application No. 201280035240.4; Filed May 24, 2012; dated Aug. 18, 2015.

Dictionary definition m-w. URL:<http://ww.merriam-webster.com/dictionary/reassure>. Retrieved from Internet Dec. 10, 2013.

Dictionary definition m-w. URL:<http://www.merriam-webster.com/dictionary/brave>. Retrieved fro Internet Dec. 10, 2013.

Inter Partes Review—Patent Owner's Prelim. Response; U.S. Pat. No. 9,795,761; Inter Partes Review No. IPR2019-00109; Filed Feb. 22, 2019.

Inter Partes Review—Patent Owner's Prelim. Response; U.S. Pat. No. 9,808,400; Inter Partes Review No. IPR2019-00208; Filed Mar. 7, 2019.

IPR Petition 2001, Declaration of Meyst dated Jan. 11, 2019; IPR 2019-00035, IPR-2019-00036.

IPR Petition 2002, Declaration of Weintraub dated Jan. 11, 2019; IPR 2019-00035, IPR-2019-00036.

IPR Petition Exhibit 2001, Declaration of Meyst dated Feb. 22, 2019; IPR2019-00109.

IPR Petition Exhibit 2001, Declaration of Meyst dated Mar. 7, 2019; IPR2019-00208.

IPR Petition Exhibit 2001; Declaration of Meyst dated Mar. 7, 2019; IPR2019-00223.

IPR Petition Exhibit 2002, Declaration of Weintraub dated Mar. 7, 2019; IPR2019-00208.

IPR Petition Exhibit 2002, Declaration of Weintraub dated Mar. 7, 2019; IPR2019-00223.

Lion King Sticker website. URL: <http://tlkobession.wuffpaws.org/OldSite/games/games2.html>. 1996 Retrieved from Internet Dec. 10, 2013.

Lion Sticker Activity Book website. URL: <http://www.amazon.com/Disneys-Simbas-Pride-Sticker-Activity/dp/B0018DOJZA>. 1998 Retrieved from Internet Dec. 10, 2013.

Medline Industries Inc. vs *C.R Bard, Inc.*, Exhibit 1 to Declaration of Karl L. Leinsing in Support of Bard's Rebuttal on Claim Construction; Civil Action No. 1:16-cv-03529; Judge Sharon Johnson Coleman; Filed Jan. 12, 2018.

Medline Industries Inc. vs *C.R Bard, Inc.*. Exhibit A lo Declaration of Brian Eutermoser in Support of Medline Response to Bard Opening Claim Construction; Civil Action No. 1:16-cv-03529; Judge Sharon Johnson Coleman; Filed Dec. 9, 2016.

Medline Industries Inc. vs *C.R Bard, Inc.*. Exhibit A to Declaration of Dylan J Raife in Support of Bard's Reply Claim Construction Bnef; Civil Action No. t:14-cv-03618: Judge John Z. Lee; Filed Aug. 15. 2016.

Medline Industries Inc. vs *C.R Bard, Inc*: Exhibit F to C.R. Bard's LPR 2.3 Contentions; Civil Action No. 1.17-cv-7216; Judge Sara L. Ellis; Filed Jan. 16, 2018.

Medline Industries Inc. vs *C.R Bard. Inc.*, Exhibit 4 to Declaration of Richard Meyst re Claim Construction; Civil Action No. 1:16-cv-03529: Judge Sharon Johnson Coleman; Filed Dec. 9, 2016.

Medline Industries Inc. vs *C.R Bard. Inc.*, Exhibit C to Declaration of Nicole Smith in Support of Bard Reply to Claim Construction Brief; Civil Action No. 1.16-cv-03529; Judge Sharon Johnson Coleman. Filed Jan. 12, 2018.

Medline Industries Inc. vs *C.R Bard. Inc.*. Exhibit 3 to Declaration of Richard Meyst re Claim Construction; Civil Action No. 1:16-cv-03529: Judge Sharon Johnson Coleman. Filed Dec. 9, 2016.

Medline Industries Inc. vs *C.R Bard. Inc.*; Exhibit C to Declaration of Nicole Smith in Support of Bard Reply to Medline Claim Construction Brief; Civil Action No. 116-cv-03529; Judge Sharon Johnson Coleman; Filed Jan. 27, 2017.

Medline Industries Inc. vs *C.R Bard. Inc.*; Exhibit F to Declaration of Brian Eutermoser in Support of Medline Response to Bard Opening Claim Construction; Civil Action No. 1:16-cv-03529; Judge Sharon Johnson Coleman: Filed Dec. 9, 2016.

Medline Industries Inc. vs *C.R. Bard, Inc.*; Exhibit E to Declaration of Nicole Smith in Support of Bard Reply lo Claim Construction Brief; Civil Action No. 1.16-cv-03529. Judge Sharon Johnson Coleman. Filed Jan. 12, 2018.

Medline Industries Inc. vs *C.R. Bard, Inc*; Exhibit A (List of Invalidating Prior Art) to C R. Bard's LPR 2 3 Contentions; Civil Action No. t:17-cv-7216; Judge Sara L. Ellis; Filed Jan. 16, 2018.

(56) **References Cited**

OTHER PUBLICATIONS

Medline Industries inc. vs *C R. Bard, Inc*; Exhibit E to Declaration of Dylan Raife in Support of Motion for Leave to Add Counterclaims; Civil Action No. 1:17-cv-7216; Judge Sara L. Ellis; Filed Feb. 27, 2018.
Medline industnes Inc, vs *C.R Bard, Inc.*; Exhibit A to Declaration of Nicole M. Smith; Civil Action No. 1:14-cv-03618; Judge John 2. Lee: Filed Jun. 4, 2016.
Medline industnes Inc. vs *C R. Bard, Inc*; C.R Bard's LPR 2 3 Contentions; Civil Action No. 1:17-cv-7216, Judge Sara L. Ellis; Filed Jan. 16, 2018.
Medline Industnes Inc. vs *C R. Bard, Inc*; Declaration oi Nicole M Smith in Support of Bard Opening Claim Construction Brief; Civil Action No. 1:14-cv-03618: Judge John 2. Lee; Filed Jun. 4, 2016.
Medline industnes Inc. vs *C R. Bard, Inc*; Exhibit B to Declaration of Dylan Raife in Support of Motion for Leave to Add Counterclaims; Civil Action No. 1:17-cv7216; Judge Sara L. Ellis; Filed Feb. 27, 2018.
Medline Industnes inc. vs *C R. Bard, Inc*; Exhibit D to Declaration of Dylan Raife in Support of Motion for Leave to Add Counterclaims; Civil Action No. 1:17-cv-7216; Judge Sara L. Ellis: Filed Feb. 27, 2018.
Medline Industnes Inc. vs *C.R Bard, Inc.*; Exhibit G to Declaration of Nicole M. Smith; Civil Action No. 1:14-cv-03618; Judge John 2, Lee; Filed Jun. 4, 2016.
Medline Industnes Inc. vs *C.R Bard, Inc.*; Exhibit H to Declaration of Nicole M. Smith; Civil Action No. 1:14-cv-03618; Judge John 2. Lee; Filed Jun. 4, 2016.
Medline Industnes Inc. vs *C R. Bard, Inc*; Exhibit A-C R. Bards Second Amended Answer to Second Amended Complaint: Civil Action No. 1:!7-cv-7216; Judge Sara L Ellis; Filed Feb. 27, 2018.
Medline Industries Inc. vs *C.R Bard, Inc.*, Declaration of Barbara Weintraub re Claim Construction; Civil Action No. 1:16-cv-03529; Judge Sharon Johnson Coleman; Filed Dec. 22, 2017.
Medline industries Inc. vs *C.R Bard, Inc.*, Declaration of Dylan J Raife in Support of Bard Opening Claim Construction Brief; Civil Action No. 1:16-cv-03529; Judge Sharon Johnson Coleman; Filed Nov. 17, 2017.
Medline Industries Inc. vs *C.R Bard, Inc.*, Declaration of Nicole Smith in Support of Bard Reply to Medline Claim Construction Brief; Civil Action No. 1:16-cv-03529; Judge Sharon Johnson Coleman; Filed Jan. 27, 2017.
Medline Industries Inc. vs *C.R Bard, Inc.*, Exhibit 1 to Declaration of Richard Meyst re Claim Construction; Civil Action No. 1:16-cv-03529; Judge Sharon Johnson Coleman; Filed Dec. 9, 2016.
Medline Industries Inc. vs *C.R Bard, Inc.*, Exhibit 2 lo Declaration of Richard Meyst re Claim Construction; Civil Action No. 1:16-cv-03529; Judge Sharon Johnson Coleman; Filed Dec. 9, 2016.
Medline Industries Inc. vs *C.R Bard, Inc.*, Exhibit 7 to Declaration of Richard Meyst Regarding Claim Construction: Civil Action No. 1:14-cv-03618; Judge John Z. Lee; Filed Jul. 8, 2016.
Medline Industries Inc. vs *C.R Bard, Inc.*, Exhibit A to Declaration of Dylan J Raife in Support of Bard Opening Claim Construction Brief; Civil Action No. 1;16-cv-03529; Judge Sharon Johnson Coleman; Filed Nov. 11, 2016.
Medline Industries Inc. vs *C.R Bard, Inc.*, Exhibit A to Declaration of Kevin A. Lake. Civil Action No. 1:14-cv-03618; Judge John Z. Lee; Filed Jul. 8, 2016.
Medline Industries Inc. vs *C.R Bard, Inc.*, Exhibit B to Declaration of Brian Eutermoser in Support of Medline Response to Bard Opening Claim Construction; Civil Action No. 1:16-cv-03529: Judge Sharon Johnson Coleman: Filed Dec. 9, 2016.
Medline industries Inc. vs *C.R Bard, inc.*, Exhibit F to Declaration of Dyian J. Raife in Support of Bard Opening Claim Construction Brief, Civil Action No. 1:16-cv-03529; Judge Sharon Johnson Coleman; Filed Nov. 11, 2016.
Medline Industries Inc. vs *C.R Bard, Inc.*, Exhibit F to Declaration of Nicole Smith in Support of Bard Reply to Medline Claim Construction Brief; Civil Action No. 1:16-cv-03529; Judge Sharon Johnson Coleman; Filed Jan. 27, 2017.
Medline Industries Inc. vs *C.R Bard, Inc.*, Exhibit H to Declaration of Kevin A. Lake; Civil Action No. 1:14-cv-03618: Judge John Z. Lee; Filed Jul. 8, 2016.
Medline Industries Inc. vs *C.R Bard, Inc.*. Bard Opening Claim Construction Bnef; Civil Action No. 1" 16-cv-03529; Judge Sharon Johnson Coleman; Filed Nov. 11, 2016.
Medline Industries Inc. vs *C.R Bard, Inc.*. Declaration of Dylan J Raife in Support of Bard's Reply Claim Construction Brief: Civil Action No. I:14-cv-03518; Judge John 2. Lee; Fiied Aug. 15, 2016.
Medline Industries Inc. vs *C.R Bard, Inc.*. Exhibit 1 to Declaration of Dylan J. Raife in Support of Bard Opening Claim Construction Brief; Civil Action No. 1:16-cv-03529; Judge Sharon Johnson Coleman; Filed Nov. 11, 2016.
Medline Industries Inc. vs *C.R Bard, Inc.*. Exhibit 10 to Declaration of Richard Meyst Regarding Claim Construction: Civil Action No. 1:14-cv-03618; Judge John Z. Lee; Filed Jul. 8, 2016.
Medline Industries Inc. vs *C.R Bard, Inc.*. Exhibit 2 to Declaration of Brian Eutermoser in Support of Medline Surrepiy: Civil Action No. 1:14-cv-03618; Judge John Z. Lee; Filed Sep. 7, 2016.
Medline Industries Inc. vs *C.R Bard, Inc.*. Exhibit C to Declaration of Dylan J Raife in Support of Bard Opening Claim Construction Brief; Civil Action No. 1:16-cv-03529; Judge Sharon Johnson Coleman: Filed Nov. 11, 2016.
Medline Industries Inc. vs *C.R Bard, Inc.*. Exhibit E to Declaration of Nicole Smith in Support of Bard Reply to Medline Claim Construction Brief; Civil Action No. 1:16-cv-03529; Judge Sharon Johnson Coleman; Filed Jan. 27, 2017.
Medline Industries Inc. vs *C.R Bard, Inc.*. Exhibit I to Declaration of Brian Eutermoser in Support of Medline Response to Bard Opening Claim Construction; Civil Action No. 1:16-cv-03529; Judge Sharon Johnson Coleman; Filed Dec. 9, 2016.
Medline Industries Inc. vs *C.R Bard, Inc.*. Exhibit i to Declaration of Nicoie M. Smith, Civil Action No. 1:14-cv-03618: Judge John Z. Lee; Filed Jun. 4, 2016.
Medline Industries Inc. vs *C.R Bard, Inc.*; Bard Reply to Medline Claim Construction Brief; Civil Action No. 1 I6-cv-03529; Judge Sharon Johnson Coleman; Filed Jan. 27, 2017.
Medline Industries Inc. vs *C.R Bard, Inc.*; C. R. Bard's Reply in Support of Claim Construction Brief; Civil Action No. 1.14-cv-03618, Judge John Z. Lee; Filed Aug. 15, 2016.
Medline Industries Inc. vs *C.R Bard, Inc.*; Declaration of Karl L Leinsing in Support of Bard's Rebuttal on Claim Construction; Civil Action No. 1:16-CV-03529; Judge Sharon Johnson Coleman; Filed Jan. 12, 2018.
Medline Industries Inc. vs *C.R Bard, Inc.*; Declaration of Karl L. Leinsing in Support of Bard's Rebuttal on Claim Construction; Civil Action No. 1.14-cv-03618. Judge John Z. Lee; Filed Aug. 15, 2016.
Medline Industries Inc. vs *C.R Bard, Inc.*; Declaration of Richard Meyst re Claim Construction; Civil Action No. 1.16-cv-03529. Judge Sharon Johnson Coleman; Filed Dec. 9, 2016.
Medline Industries Inc. vs *C.R Bard, Inc.*; Exhibit 1 to Declaration of Karl L Leinsing in Support of Bard's Rebuttal on Claim Construction; Civil Action No. 1.14-cv-03618; Judge John Z. Lee, Filed Aug. 15, P016.
Medline Industries Inc. vs *C.R Bard, Inc.*; Exhibit 1 to Declaration of Karl R Leinsing in Support of Bard Reply to Medline Claim Construction Brief; Civil Action No. 1:16-cv-03529; Judge Sharon Johnson Coleman; Filed Jan. 27, 2017.
Medline Industries Inc. vs *C.R Bard, Inc.*; Exhibit 3 to Declaration of Richard Meyst Regarding Claim Construction; Civil Action No. 1:14-cv-03618; Judge John Z. Lee, Filed Jul. 8, 2016.
Medline Industries Inc. vs *C.R Bard, Inc.*; Exhibit 4 to Declaration of Richard Meyst Regarding Claim Construction; Civil Action No. 1:14-cv-03618; Judge John Z. Lee. Filed Jul. 8, 2016.
Medline Industries Inc. vs *C.R Bard, Inc.*; Exhibit A to Declaration of Barbara Weintraub re Claim Construction; Civil Action No. 1:16-cv-03529; Judge Sharon Johnson Coleman. Filed Dec. 9, 2016.
Medline Industries Inc. vs *C.R Bard, Inc.*; Exhibit B to Declaration of Nicole Smith in Support of Bard Reply to Claim Construction Brief; Civil Action No. 1;16-cv-03529. Judge Sharon Johnson Coleman. Filed Jan. 12, 2018.

(56) **References Cited**

OTHER PUBLICATIONS

Medline Industries Inc. vs *C.R Bard, Inc.*; Exhibit B to Declaration ot Dylan J Raife in Support of Bard's Reply Claim Construction Brief; Civil Action No. 1:14-cv-03618; Judge John Z. Lee; Filed Aug. 15, 2016.
Medline Industries Inc. vs *C.R Bard, Inc.*; Exhibit C to Declaration of Dylan J Raife in Support of Bard's Reply Claim Construction Brief; Civil Action No. 1:14-cv 03618; Judge John Z. Lee; Filed Aug. 15, 2016.
Medline Industries Inc. vs *C.R Bard, Inc.*; Exhibit D to Declaration of Brian Eutermoser in Support of Medline Response to Bard Opening Claim Construction; Civil Action No. 1:16-cv-03529; Judge Sharon Johnson Coleman; Filed Dec. 9, 2016.
Medline Industries Inc. vs *C.R Bard, Inc.*; Exhibit D to Declaration of Dylan J Raife in Support of Bard's Reply Claim Construction Brief: Civil Action No. 1.14-cv-03618; Judge John Z. Lee. Filed Aug. 15, 2016.
Medline Industries Inc. vs *C.R Bard, Inc.*; Exhibit D to Declaration of Nicole Smith in Support of Bard Reply to Medline Claim Construction Brief; Civil Action No. 1.16-cv-03529; Judge Sharon Johnson Coleman; Filed Jan. 27, 2017.
Medline Industries Inc. vs *C.R Bard, Inc.*; Exhibit E to Declaration of Kevin A. Lake; Civil Action No. 1:14-cv-03618, Judge John Z. Lee; Filed Jul. 8, 2016.
Medline Industries Inc. vs *C.R Bard, Inc.*; Exhibit F lo Declaration of Kevin A Lake: Civil Action No. 1:14-cv-03618. Judge John Z. Lee; Filed Jul. 8, 2016.
Medline Industries Inc. vs *C.R Bard, Inc.*; Exhibit F to Declaration of Dylan J. Raife in Support of Bard's Reply Claim Construction Brief; Civil Action No. 1. I4-cv-03618; Judge John Z. Lee, Filed Aug. 15, 2016.
Medline Industries Inc. vs *C.R Bard, Inc.*; Exhibit G to Declaration of Kevin A. Lake; Civil Action No. 1:14-cv-03618. Judge John Z. Lee; Filed Jul. 8, 2016.
Medline Industries Inc. vs *C.R Bard, Inc.*; Exhibit G to Declaration of Nicole Smith in Support of Bard Reply to Medline Claim Construction Brief: Civil Action No. 1:16-cv-03529: Judge Sharon Johnson Coleman; Filed Jan. 27, 2017.
Medline Industries Inc. vs *C.R Bard, Inc.*; Exhibit H to Declaration of Brian Eutermoser in Support of Medline Response to Bard Opening Claim Construction; Civil Action No. 1:16-cv-03529; Judge Sharon Johnson Coleman; Filed Dec. 9, 2016.
Medline Industries Inc. vs *C.R Bard, Inc.*; Exhibit H to Declaration of Dylan J. Raife in Support of Bard Opening Claim Construction Brief. Civil Action Mo. 1:16-cv-Q3529; Judge Sharon Johnson Coleman; Filed Nov. 11, 2016.
Medline Industries Inc. vs *C.R Bard, Inc.*; Exhibit I to Declaration of Kevin A. Lake; Civil Action No. 1.14-sv-03618; Judge John 2. Lee; Filed Jul. 8, 2016.
Medline Industries Inc. vs *C.R Bard, Inc.*; Exhibit N to Declaration of Brian Eutermoser in Support of Medline Response to Bard Opening Claim Construction; Civil Action No. 1:16-cv-03529; Judge Sharon Johnson Coleman; Filed Dec. 9, 2016.
Medline Industries Inc. vs *C.R Bard, Inc.*; Medline Memo of Law re Expert Testimony in Claim Construction Proceedings; Civil Action No. 1;14-cv-03618; Judge John Z. Lee. Filed Jan. 25, 2017.
Medline industries Inc. vs *C.R Bard, Inc.*; Medline Surreply to Claim Construction Bnef; Civil Action No. 1.14-CV-Q3618: Judge John Z. Lee; Filed Sep. 7, 2016.
Medline Industries Inc. vs *C.R Bard, Inc.*; Transcript of Deposition ot Richard Meyst; Civil Action No. 1:16-W-03529. Jan. 20, 2017.
Medline Industries Inc. vs *C.R Bard, Inc*: Exhibit G to C.R Bard's LPR 2.3 Contentions; Civil Action No. 1.17-cv-7216; Judge Sara L Ellis; Fiied Jan. 16, 2013.
Medline Industries Inc. vs *C.R Bard, Inc*; Exhibit 3 to C.R. Bard's LPR 2.3 Contentions; Civil Action No. 1:17-CV-7216; Judge Sara L Ellis; Filed Jan. 16, 2018.
Medline Industries Inc. vs *C.R Bard, Inc*; Exhibit C to C.R. Bard's LPR 2.3 Contentions; Civil Action No. 1:17-cv-7216; Judge Sara L. Ellis; Filed Jan. 16, 2018.
Medline Industries Inc. vs *C.R Bard, Inc*; Exhibit D to C.R. Bard's LPR 2.3 Contentions; Civil Action No. 1:17-cv-7216; Judge Sara L. Etlis; Filed Jan. 16, 2018.
Medline Industries Inc. vs *C.R Bard, Inc*; Exhibit E to C R. Bard's LPR 2.3 Contentions; Civil Action No. 1;17-cv-7216; Judge Sara L. Ellis; Fiied Jan. 16, 2018.
Medline Industries Inc. vs *C.R Bard. Inc*, Exhibit H IoC.R. Bard's LPR 2.3 Contentions. Civil Action No. 1:17-CV-7216; Judge Sara L. Ellis: Filed Jan. 16, 2018.
Medline industries Inc. vs *C.R Bard. Inc*., Declaration of Brian Eutermoser in Support of Medline Surreply. Civil Action No. 1:14-cv-03618, Judge John Z. Lee; Filed Sep. 7, 2016.
Medline Industries Inc. vs *C.R Bard. Inc*., Exhibit 8 lo Declaration of Richard Meyst Regarding Claim Construction: Civil Action No. 1:14-cv-03618: Judge John Z. Lee: Filed Jul. 8, 2016.
Medline Industries Inc. vs *C.R Bard. Inc*., Exhibit A to Declaration of Barbara Weintraub Regarding Claim Construction: Civil Action No. 1.14-cv-03618. Judge John Z. Lee; Filed Jul. 8, 2016.
Medline Industries Inc. vs *C.R Bard. Inc*., Exhibit A to Declaration of Nicole Smith in Support of Bard Repiy lo Medline Claim Construction Brief; Civil Action No. 1.16-cv-03529; Judge Sharon Johnson Coleman; Filed Jan. 27, 2017.
Medline Industries Inc. vs *C.R Bard. Inc*., Exhibit B to Declaration of Dylan J Raife in Support of Bard Opening Claim Construction Brief; Civil Action No. 1:16-cv-03529; Judge Sharon Johnson Coleman; Filed Nov. 11, 2016.
Medline Industries Inc. vs *C.R Bard. Inc*., Exhibit E to Declaration of Dylan J Raife in Support of Bard's Reply Claim Construction Brief; Civil Action No. 1.14-cv-03618; Judge John Z. Lee, Filed Aug. 15, 2016.
Medline Industries Inc. vs *C.R Bard. Inc*.. Declaration of Richard Meyst Regarding Claim Construction; Civil Action No. 1:14-cv-03618; Judge John 2. Lee; Filed Jul. 8, 2016.
Medline Industries Inc. vs *C.R Bard. Inc*.. Exhibit 11 to Declaration of Richard Meyst re Claim Construction: Civil Action No. 1:16-cv-03529; Judge Sharon Johnson Coleman; Filed Dec. 9, 2016.
Medline Industries Inc. vs *C.R Bard. Inc*.. Exhibit A to Declaration of Richard Meyst Regarding Claim Construction; Civil Action No. 1;14-cv-03618; Judge John Z. Lee; Filed Jul. 8, 2016.
Medline Industries Inc. vs *C.R Bard. Inc*.. Medline Motion lo Supplement Record on Claim Construction with Leinsing Testimony; Civil Action No. 1:14-w-03618; Judge John Z. Lee; Filed Mar. 23, 2017.
Medline Industries Inc. vs *C.R Bard. Inc*.; Bard Reply Claim Construction Brief; Civil Action No. 1:16-cv-03529; Judge Sharon Johnson Coleman; Filed Jan. 12, 2018.
Medline Industries Inc. vs *C.R Bard. Inc*.; Bard Response to Memo of Law re Expert Testimony in Claim Construction Proceedings; Civil Action No. 1:14-cv-03618; Judge John Z. Lee. Filed Feb. 8, 2017.
Medline Industries Inc. vs *C.R Bard. Inc*.; Declaration of Brian Eutermoser in Support of Medline Response to Bard Opening Claim Construction Brief. Civil Action No. 1:16-cv-03529; Judge Sharon Johnson Coleman; Filed Dec. 22, 2017.
Medline Industries Inc. vs *C.R Bard. Inc*.; Declaration of Karl R. leinsing in Support of Bard Reply io Medline Claim Construction Brief; Civil Action No. 1:16-cv-03529; Judge Sharon Johnson Coleman; Filed Jan. 27, 2017.
Medline Industries Inc. vs *C.R Bard. Inc*.; Exhibit 3 to Declaration of Peter Sauer in Support of Medline's Motion to Supplement Record; Civil Action No. 1:14-cv-03618: Judge John Z. Lee. Filed Mar. 23, 2017.
Medline Industries Inc. vs *C.R Bard. Inc*.; Exhibit 8 to Declaration of Richard Meyst re Claim Construction; Civil Action No. 1:16-cv-03529; Judge Sharon Johnson Coleman; Filed Dec. 9, 2016.
Medline Industries Inc. vs *C.R Bard. Inc*.; Exhibit C to Declaration of Kevin A. Lake; Civil Action No. 1 14-cv-03618. Judge John Z. Lee; Filed Jul. 8, 2016.
Medline Industries Inc. vs *C.R Bard. Inc*.; Exhibit G to Declaration of Dylan J. Raife in Support of Bard Opening Claim Construction Brief, Civil Action No. 1:16-cv-03529; Judge Sharon Johnson Coleman; Filed Nov. 17, 2017.

(56) **References Cited**

OTHER PUBLICATIONS

Medline Industries Inc. vs *C.R Bard. Inc.*; Exhibit G to Declaration of Brian Eutermoser in Support of Medline Response to Bard Opening Claim Construction; Civil Action No. 1:16-cv-03529; Judge Sharon Johnson Coleman; Filed Dec. 9, 2016.
Medline industries Inc. vs *C.R Bard. Inc.*; Exhibit H to Declaration of Dylan J Raife in Support of Bard Opening Claim Construction Brief, Civil Action No. 1:16-cv-03529; Judge Sharon Johnson Coleman; Filed Nov. 17, 2017.
Medline Industries Inc. vs *C.R Bard. Inc.*; Medline Response to Bard Opening Claim Construction; Civil Action No. 1:16-cv-03529; Judge Sharon Johnson Coleman; Filed Dec. 2016.
Medline Industries Inc. vs *C.R Bard. Inc.*; Transcript of Deposition of Barbara A Weinlraub; Civil Action Mo. 1:16-cv-03529; Jan. 20, 2017.
Medline Industries Inc. vs *C.R Bard. Inc.*; Transcript of Deposition of Karl Leinsing; Civil Action No. 1:16-cv-03529; Feb. 17, 2017.
Medline industries Inc. vs *C.R Sard, Inc.*; Exhibit 9 to Declaration of Richard Meyst re Claim Construction; Civil Action No. 1:16-cv-03529; Judge Sharon Johnson Coleman; Filed Dec. 9, 2016.
Medline Industries Inc. vs *C.R. Bard, Inc.*, Bard Response to Medline Surrepiy re Claim Construction; Civil Action No. 1:14-cv-03618; Judge John Z. Lee; Filed Sep. 13, 2016.
Medline Industries Inc. vs *C.R. Bard, Inc.*, Exhibit 2 to Declaration of Karl L. Lansing in Support of Bard's Rebuttal on Claim Construction: Civil Action No. 1:14-cv-03618; Judge John Z. Lee; Filed Aug. 15, 2016.
Medline Industries Inc. vs *C.R. Bard, Inc.*, Exhibit B to Declaration of Kevin A. Lake. Civil Action No. 1:14-cv-03618; Judge John Z. Lee; Filed Jul. 8, 2016.
Medline Industries Inc. vs *C.R. Bard, Inc.*, Exhibit D to Declaration of Nicole Smith in Support of Bard Reply to Claim Construction Brief; Civil Action No. 116-cv-03529; Judge Sharon Johnson Coleman. Filed Jan. 12, 2018.
Medline Industries Inc. vs *C.R. Bard, Inc.*, Exhibit J to Declaration of Brian Eutermoser in Support of Medline Response to Bard Opening Claim Construction; Civil Action No. 1:16-cv-03529: Judge Sharon Johnson Coleman; Filed Dec. 9, 2016.
Medline Industries Inc. vs *C.R. Bard, Inc.*, Exhibit K to Declaration of Brian Eutermoser in Support of Medline Response to Bard Opening Claim Construction; Civil Action No. 1:16-cv-03529: Judge Sharon Johnson Coleman; Filed Dec. 9, 2016.
Medline Industries Inc. vs *C.R. Bard, Inc.*. Exhibit 1 to Declaration of Peter Sauer in Support of Medline's Motion to Supplement Record; Civil Action No. 1:14-cv-03618; Judge John Z. Lee; Filed Mar. 23, 2017.
Medline Industries Inc. vs *C.R. Bard, Inc.*. Exhibit 9 to Declaration of Richard Meyst Regarding Claim Construction; Civil Action No. 1:14-cv-03618; Judge John Z. Lee; Filed Jul. 8, 2016.
Medline Industries Inc. vs *C.R. Bard, Inc.*. Exhibit L to Declaration of Brian Eutermoser in Support of Medline Response to Bard Opening Claim Construction; Civil Action No. 1:16-cv-03529: Judge Sharon Johnson Coleman: Filed Dec. 9, 2016.
Medline Industries Inc. vs *C.R. Bard, Inc.*. Medline Response to Bard Claim Construction Brief. Civil Action No. 1:14~cv-03618: Judge John Z. Lee; Filed Jul. 8, 2016.
Medline Industries Inc. vs *C.R. Bard, Inc.*: Exhibit 2 to C.R. Bard's LPR 2.3 Contentions; Civil Action No. 117-CV-7216; Judge Sara L Eiiis; Filed Jan. 16, 2018.
Medline Industries Inc. vs *C.R. Bard, Inc.*; Declaration of Barbara Weintraub re Claim Construction: Civil Action No. 1.16-cv-03529. Judge Sharon Johnson Coleman; Filed Dec. 9, 2016.
Medline Industries Inc. vs *C.R. Bard, Inc.*; Declaration of Brian Eutermoser in Support of Medline Response to Bard Opening Claim Construction; Civil Action No. 1:16-cv-03529; Judge Sharon Johnson Coleman; Filed Dec. 9, 2016.
Medline Industries Inc. vs *C.R. Bard, Inc.*; Declaration of Nicole Smith in Support of Bard Reply to Claim Construction Brief; Civil Action No. I:16-cv-03529; Judge Sharon Johnson Coleman; Filed Jan. 12, 2018.
Medline Industries Inc. vs *C.R. Bard, Inc.*; Exhibit 10 lo Declaration of Richard Meyst re Claim Construction; Civil Action No. 1:16-cv-03529; Judge Sharon Johnson Coleman; Filed Dec. 9, 2016.
Medline Industries Inc. vs *C.R. Bard, Inc.*; Exhibit 2 to Declaration of Peter Sauer in Support of Medline's Motion to Supplement Record; Civil Action No. 1:14-cv-03618; Judge John Z. Lee. Filed Mar. 23, 2017.
Medline Industries Inc. vs *C.R. Bard, Inc.*; Exhibit 5 to Declaration of Richard Meyst re Claim Construction: Civil Action No. 1:16-cv-03529; Judge Sharon Johnson Coleman, Filed Dec. 9, 2016.
Medline Industries Inc. vs *C.R. Bard, Inc.*; Exhibit 6 to Declaration of Richard Meyst re Claim Construction; Civil Action No. 1:16-cv-03529; Judge Sharon Johnson Coleman. Filed Dec. 9, 2016.
Medline Industries Inc. vs *C.R. Bard, Inc.*; Exhibit 7 to Declaration of Richard Meyst re Claim Construction; Civil Action No. 1:16-cv-03529; Judge Sharon Johnson Coleman; Filed Dec. 9, 2016.
Medline Industries Inc. vs *C.R. Bard, Inc.*; Exhibit C to Declaration of Brian Eutermoser in Support of Medline Response to Bard Opening Claim Construction; Civil Action No. 1:16-cv-03529; Judge Sharon Johnson Coleman; Filed Dec. 9, 2016.
Medline Industries Inc. vs *C.R. Bard, Inc.*; Exhibit E to Declaration of Brian Eutermoser in Support of Medline Response to Bard Opening Claim Construction; Civil Action No. 1:16-cv-03529; Judge Sharon Johnson Coleman; Filed Dec. 9, 2016.
Medline Industries Inc. vs *C.R. Bard, Inc.*; Exhibit M to Declaration of Brian Eutermoser in Support of Medline Response to Bard Opening Claim Construction; Civil Action No. 1:16-cv-03529; Judge Sharon Johnson Coleman; Filed Dec. 9, 2016.
Medline Industries Inc. vs *C.R. Bard. Inc.*, Exhibit 2 to Declaration of Richard Meyst Regarding Claim Construction: Civil Action No. 1:14-cv-03618; Judge John 2. Lee. Filed Jul. 8, 2016.
Medline Industries Inc. vs *C.R. Bard. Inc.*; Exhibit 5 to Declaration of Richard Meyst Regarding Claim Construction; Civil Action No. 1:14-cv-03618; Judge John Z. Lee. Filed Jul. 8, 2016.
Medline Industries Inc. vs *C.R. Bard. Inc.*; Exhibit 6 to Declaration of Richard Meyst Regarding Claim Construction; Civil Action No. 1:14-cv-03618; Judge John Z. Lee. Filed Jul. 8, 2016.
Medline industries Inc. vs *C.R. Bard. Inc.*; Medline Response to Bard Opening Claim Construction Brief; Civil Action No. t:16-cv-03529; Judge Sharon Johnson Coleman; Filed Dec. 22, 2017.
Medline Industries Inc. vs *OR. Bard, Inc.*; Exhibit E to Declaration of Dylan J Raife in Support of Bard Opening Claim Construction Brief; Civil Action No. 1:16-cv-03529; Judge Sharon Johnson Coleman; Filed Nov. 11, 2016.
Medline Industries Inc. vs *C.R Bard, Inc*, Exhibit I to C.R. Bard's LPR 2.3 Contentions. Civil Action No. 1:17-cv-7216; Judge Sara L. Ellis; Filed Jan. 16, 2018.
Medline Industries Inc. vs *C.R Bard, Inc.*, Declaration of Dylan J Raife in Support of Bard Opening Claim Construction Brief; Civil Action No. 1:16-cv-03529; Judge Sharon Johnson Coleman; Filed Nov. 11, 2016.
Medline Industries Inc. vs *C.R Bard, Inc.*, Exhibit 11 to Declaration of Richard Meyst Regarding Claim Construction; Civil Action No. 1:14-cv-03618; Judge John Z Lee; Filed Jul. 8, 2016.
Medline Industries Inc. vs *C.R Bard, Inc.*. Declaration of Kevin A. Lake in Support of Medline Response to Bard Claim Construction Brief: Civil Action No. 1:14-cv-03618; Judge John Z. Lee; Filed Jul. 8, 2016.
Medline Industries Inc. vs *C.R Bard, Inc.*; Declaration of Barbara Weintraub Regarding Claim Construction; Civil Action No. 1:14-cv-03618; Judge John Z. Lee. Filed Jul. 8, 2016.
Medline Industries Inc. vs *C.R Bard, inc.*; Exhibit D to Declaration of Dylan J. Raife in Support of Bard Opening Claim Construction Brief. Civil Action No. 1:16-cv-03529; Judge Sharon Johnson Coleman; Filed Nov. 11, 2016.
Medline Industries Inc. vs *C.R Bard. Inc.*; Exhibit 1 to Declaration of Richard Meyst Regarding Claim Construction; Civil Action No. 1:14-cv-03618; Judge John Z. Lee; Filed Jul. 8, 2016.
Medline Industries Inc. vs *C.R. Bard, Inc*, Exhibit 4 to C.R. Bard's LPR 2 3 Contentions; Civil Action No. 1:17-cv-7216; Judge Sara L. Ellis; Filed Jan. 16, 2018.

(56) **References Cited**

OTHER PUBLICATIONS

Medline IndustriesfInc. vs *C.R. Bard, Inc.*, Declaration of Peter Sauer in Support of Medline's Motion to Supplement Record; Civil Action No. 1:14-cv-03618; Judge John Z. Lee; Filed Mar. 23, 2017.
Medline Industries Inc. vs *C.R. Bard, Inc.*; Exhibit D lo Declaration of Kevin A. Lake; Civil Action No. 1:14-cv-03618. Judge John Z. Lee; Filed Jul. 8, 2016.
Medline Industries Inc. vs *C.R. Bard. Inc.*, Exhibit 1 to Declaration of Brian Eutermoser in Support of Medline Surrepiy; Civil Action No. 1:14-cv-03618; Judge John 2. Lee; Filed Sep. 7, 2016.
Medline Industries Inc. vs *C R. Bard, Inc.*; Exhibit B to Declaration of Nicole M. Smith; Civil Action No. 1:14~cv43618; Judge John 2. Lee; Filed Jun. 4, 2016.
Medline Industries Inc. vs *C R. Bard, inc.*; Exhibit D to Declaration of Nicole M Smith; Civil Action No. 1:14-cv-03618; Judge John 2. Lee; Filed Jun. 4, 2016.
Medline Industries Inc. vs *C R. Bard, Inc.*; Exhibit E to Declaration oi Nicole M. Smith; Civil Action No. 1:14-cv-03618: Judge John 2. Lee; Filed Jun. 4, 2016.
Medline Industries Inc. vs *C R. Bard, Inc.*; Exhibit F to Declaration of Nicole M. Smith; Civil Action No. 1:14-cv-03618; Judge John 2. Lee; Filed Jun. 4, 2016.
Medline Industries Inc. vs *C R. Bard, Inc*; C R. Bard's Opening Claim Construction Bnel; Civil Action No. 1:14-cv-03618; Judge John 2. Lee; Filed Jun. 4, 2016.
Medline Industries Inc. vs *C R. Bard, inc*; C.R Bard's Motion for Leave to Add Counterclaims; Civil Action No. 1:17-cv-7216; Judge Sara L. Ellis; Filed Feb. 27, 2018.
Medline Industries Inc. vs *C R. Bard, Inc*; Declaration of Dylan Raife in Support of Motion for Leave to Add CounterClaims; Civil Action No. 1:17-cv-7216; Judge Sara L. Eliis; Filed Feb. 27, 2018.
Medline Industries Inc. vs *C R. Bard, Inc*; Exhibit C to Declaration of Dylan Raife in Support of Motion for Leave to Add Counter-claims; Civil Action No. 1.17-cv-7216; Judge Sara L. Ellis; Filed Feb. 27, 2018.
Medline industries Inc. vs *C R. Bard. Inc*; Exhibit 1 to C R. Bard's LPR 2.3 Contentions, Civil Action No. 1:17-cv-7216, Judge Sara L. Ellis. Filed Jan. 16, 2018.
Medline Industries Inc. vs *C.R Bard, Inc.*, Exhibit A to Declaration of Richard Meyst re Claim Construction: Civil Action No. 1:16-cv-03529: Judge Sharon Johnson Coleman; Filed Dec. 9, 2016.
Medline Industries Inc. vs *C.R Bard, Inc.*; Exhibit B lo Declaration of Nicole Smith in Support of Bard Reply to Medline Claim Construction Brief; Civil Action No. 1.16-cv-03529; Judge Sharon Johnson Coleman; Filed Jan. 27, 2017.
Medline Industries Inc. vs *C.R. Bard, Inc.*; C R. Bard's Final LPR 2.3 Contentions; Civil Action No. 1:17-cv-7216; Judge Sara L. Ellis; Filed Jul. 24, 2018.
Medline Industries Inc. vs *C.R. Bard, Inc.*; Exhibit A—C. R. Bard's Final LPR 2.3 Contentions; Civil Action No. 1:17-cv-7216; Judge Sara L. Ellis; Filed Jul. 24, 2018.
Medline Industries Inc. vs *C.R. Bard, Inc.*; Exhibit B—C. R. Bard's Final LPR 2.3 Contentions; Civil Action No. 1:17-cv-7216; Judge Sara L. Ellis; Filed Jul. 24, 2018.
Medline Industries Inc. vs *C.R. Bard, Inc.*; Exhibit C—C. R. Bard's Final LPR 2.3 Contentions; Civil Action No. 1:17-cv-7216; Judge Sara L. Ellis; Filed Jul. 24, 2018.
Medline Industries Inc. vs *C.R. Bard, Inc.*; Exhibit C to Declaration of Nicole M. Smith; Civil Action No. 1:14-cv-03618; Judge John 2. Lee; Filed Jun. 4, 2016.
Medline Industries Inc. vs *C.R. Bard, Inc.*; Exhibit D—C. R. Bard's Final LPR 2.3 Contentions; Civil Action No. 1:17-cv-7216; Judge Sara L. Ellis; Filed Jul. 24, 2018.
Medline Industries Inc. vs *C.R. Bard, Inc.*; Exhibit E—C. R. Bard's Final LPR 2.3 Contentions; Civil Action No. 1:17-cv-7216; Judge Sara L. Ellis; Filed Jul. 24, 2018.
Medline Industries Inc. vs *C.R. Bard, Inc.*; Exhibit F—C. R. Bard's Final LPR 2.3 Contentions; Civil Action No. 1:17-cv-7216; Judge Sara L. Ellis; Filed Jul. 24, 2018.
Medline Industries Inc. vs *C.R. Bard, Inc.*; Exhibit G—C. R. Bard's Final LPR 2.3 Contentions; Civil Action No. 1:17-cv-7216; Judge Sara L. Ellis; Filed Jul. 24, 2018.
Medline Industries Inc. vs *C.R. Bard, Inc.*; Exhibit H—C. R. Bard's Final LPR 2.3 Contentions; Civil Action No. 1:17-cv-7216; Judge Sara L. Ellis; Filed Jul. 24, 2018.
Medline Industries Inc. vs *C.R. Bard, Inc.*; Exhibit I—C. R. Bard's Final LPR 2.3 Contentions; Civil Action No. 1:17-cv-7216; Judge Sara L. Ellis; Filed Jul. 24, 2018.
Medline Industries Inc. vs *C.R. Bard, Inc.*; Exhibit J—C. R. Bard's Final LPR 2.3 Contentions; Civil Action No. 1:17-cv-7216; Judge Sara L. Ellis; Filed Jul. 24, 2018.
Medline Industries Inc. vs *C.R. Bard, Inc.*; Exhibit K—C. R. Bard's Final LPR 2.3 Contentions; Civil Action No. 1:17-cv-7216; Judge Sara L. Ellis; Filed Jul. 24, 2018.
Medline Industries Inc. vs *C.R. Bard, Inc.*; Exhibit L—C. R. Bard's Final LPR 2.3 Contentions; Civil Action No. 1:17-cv-7216; Judge Sara L. Ellis; Filed Jul. 24, 2018.
Medline Industries Inc. vs *C.R. Bard, Inc.*; Exhibit M—C. R. Bard's Final LPR 2.3 Contentions; Civil Action No. 1:17-cv-7216; Judge Sara L. Ellis; Filed Jul. 24, 2018.
Medline Industries Inc. vs *C.R. Bard, Inc.*; Exhibit N—C. R. Bard's Final LPR 2.3 Contentions; Civil Action No. 1:17-cv-7216; Judge Sara L. Ellis; Filed Jul. 24, 2018.
Medline Industries Inc. vs *C.R. Bard, Inc.*; Exhibit O—C. R. Bard's Final LPR 2.3 Contentions; Civil Action No. 1:17-cv-7216; Judge Sara L. Ellis; Filed Jul. 24, 2018.
Medline Industries Inc. vs *C.R. Bard, Inc.*; Exhibit P—C. R. Bard's Final LPR 2.3 Contentions; Civil Action No. 1:17-cv-7216; Judge Sara L. Ellis; Filed Jul. 24, 2018.
Medline Industries Inc. vs *C.R. Bard, Inc.*; Exhibit Q—C. R. Bard's Final LPR 2.3 Contentions; Civil Action No. 1:17-cv-7216; Judge Sara L. Ellis; Filed Jul. 24, 2018.
Medline Industries Inc. vs *C.R. Bard, Inc.*; Exhibit R—C. R. Bard's Final LPR 2.3 Contentions; Civil Action No. 1:17-cv-7216; Judge Sara L. Ellis; Filed Jul. 24, 2018.
Medline Industries Inc. vs *C.R. Bard, Inc.*; Exhibit S—C. R. Bard's Final LPR 2.3 Contentions; Civil Action No. 1:17-cv-7216; Judge Sara L. Ellis; Filed Jul. 24, 2018.
Medline Industries Inc. vs *C.R. Bard, Inc.*; Exhibit T—C. R. Bard's Final LPR 2.3 Contentions; Civil Action No. 1:17-cv-7216; Judge Sara L. Ellis; Filed Jul. 24, 2018.
Medline Industries Inc. vs *C.R. Bard, Inc*; C.R. Bard's LPR 3.1 Contentions; Civil Action No. 1:16-cs-3529; Judge Sharon Johnson Coleman; Filed Aug. 26, 2016.
Medline Industries Inc. vs *C.R. Bard, Inc*; Exhibit B to C R. Bard's LPR 2.3 Contentions; Civil Action No. 1:17-cv-7216; Judge Sara L. Ellis; Filed Jan. 16, 2018.
Medline Industries vs. *CR Bard, Inc*; No. 14-cv-3618; C.R. Bard's LPR 3.1 Contentions; Filed Nov. 24, 2015.
Medline Industries, Inc. vs *C.R. Bard, Inc*; No. 1:14-cv-03618; Defendant C.R. Bards, Inc's Second Amended Answer to Second Amended Complaint; Filed Sep. 25, 2015.
Medline Industries, Inc. vs *C.R. Bard, Inc*; No. 1:14-cv-03618; Medline Industries Inc's Opposition to C.R.Bard Inc's Motion For Leave to File Second Amended Answer to Add Counterclaim; Filed Oct. 20, 2015.
Medline Industries, Inc. vs *C.R. Bard, Inc*; No. 1:14-cv-03618; Medline Industries, Inc.'s Response to C.R. Bard's Initial Invalidity Contentions; Exhibits A-H; Dated Sep. 19, 2014.
Medline Industries, Inc. vs *C.R. Bard, Inc*; No. 1:14-cv-03618; Notice of Medline Industries Inc's Motion to Dismiss C.R. Bard Inc's Inequitable Conduct Counterclaim and to strike affirmative defense for the 786 Patent; Filed Oct. 20, 2015.
Medline Industries, Inc. vs *C.R. Bard, Inc*; No. 1:14-cv-03618; Response to Medline Industries, Inc.'s First Set of Interrogatories; Dated Sep. 26, 2014.
Medline Industries, Inc. vs *C.R. Bard, Inc*; No. 1:14-cv-3618; Responses to Medline Industries, Inc.'s First set of Requests for the Production of Documents; Dated Sep. 26, 2014.
Medline Industries, Inc. vs *C.R. Bard, Inc*; No. 1:17-cv-03618; Medline's Supplemental Responses to Bard's Interrogatory No.

(56) **References Cited**

OTHER PUBLICATIONS

1-24 (redacted), dated Apr. 20, 2016; Filed as IPR Petition Exhibit 2013 in IPR2019-00035 and IPR2019-00036.
Medline Industries, Inc. vs. *C.R. Bard, Inc.*; No. 1:17-cv-3539; Medline's Second Supplemental Responses to Bard's Interrogatory No. 11, 14, and 15 (redacted), dated Oct. 26, 2017; Filed as IPR Petition Exhibit 2014 in IPR2019-00035 and IPR2019-00036.
Medline Industries, Inc. vs. *C.R. Bard, Inc.*; No. 1:17-cv-7216; Medline's Objection and Response to Bard's First Set of Interrogatories (redacted), dated Oct. 1, 2018; Filed as IPR Petition Exhibit 2012 in IPR2019-00035 and IPR2019-00036.
Medline Industries, Inc. vs. *C.R. Bard, Inc.*; No. 14-cv-3618; C.R. Bard's LPR 2.3 Contentions—Initial Non-Infringement; Exhibits 1 and A-H; Dated Sep. 5, 2014.
Medline Industries, Inc. vs. *C.R. Bard, Inc.*; No. 14-cv-3618; Memorandum in Support of C.R. Bard's Motion for Leave to File Second Amended Answer to Add Counterclaim; Filed Sep. 25, 2015.
Medline Industries, Inc. vs. *C.R. Bard, Inc.*: Transcript of Proceedings—Claim Construction Hearing: Civil Action No. 1:14-cv-3618. Judge John Z. Lee; Dated Jan. 11, 2017.
Naming Characters on Cards website. URL:<https://web.archive.org/web/20060219171403/http://www.hubbardscupboard.org/brown_bear_brown_bear.html>. (2006) . . . Retrieved form Internet Dec. 11, 2013.
Notice of Allowance; EP Application No. 10251025.2-1501; Reference P112645EP00; dated Feb. 18, 2016.
Inter Partes Review—Patent Owner's Prelim. Response; U.S. Pat. No. 9,808,596; Inter Partes Review No. IPR2019-00223; Filed Mar. 7, 2019.
Medline Industries Inc. vs. *C.R Bard, Inc.* Bard Opening Claim Construction Brief; Civil Action No. 1:16-cv-03529; Judge Sharon Johnson Coleman; Filed Nov. 17, 2017.
Webster's Dictionary Definition of "Intend"; Webster's Third New International Dictionary of the English Language unabridged (1961); filed as IPR Petition Exhibit 2016 in IPR 2019-00035.
"Appeal Decision", U.S. Appl. No. 12/785,064, filed May 21, 2010; Mailed May 18, 2016.
"Article 94(3) EPC Examination", European Application No. 10 251 025.2-1501; Reference P112645EP00; dated Mar. 13, 2015.
"Australian First Exam Report", AU Patent Application No. 2011351971; Patent Examination Report No. 1; dated Jul. 25, 2015.
"Bard IPR Exhibit", "Inter Partes Review Petition", IPR Exhibit—Carrow Declaration for U.S. Pat. No. 8,631,935; Susan Carrow Declaration; Mailed Dec. 30, 2014.
"Bard Medical Division Care & Catheterization Script", Care & Catheterization/Preventing UTI Script for education video; Preventing UTI: Care and Catheterization Techniques; Copyright 2006; AV0512-06 R12/05 XXX.
"Bard Publication", "A few important words about Catheter Care"; C.R. Bard, Inc.; Copyright 2001 C.R. Bard, Inc.
"Bardex I.C. Complete Care StateLock Device 350 ml Urine Meter Foley Tray with Bacteriostatic Collection System", Bard Infection Control System; Bardex I.C. Complete Care Directions for Use; Copyright Dated Sep. 2006.
"Bardex I.C. Infection Control 350ml Urine Meter Foley Tray", Bard Infection Control System; Bardex I.C. Urine Meter Foley Tray Directions for Use; Copyright Dated 2006.
"Bardex I.C. Infection Control Foley Tray", Bard Infection Control System; Bardex I.C. Directions for Use Infection Control Foley Tray; Copyright Dated 2006.
"Decision Instituting Inter Partes Review", IPR2019-00035; U.S. Pat. No. 9,745,088; Mailed Apr. 10, 2019.
"Decision Instituting Inter Partes Review", IPR2019-00036; U.S. Pat. No. 9,745,088; Mailed Apr. 10, 2019.
"Decision Instituting IPR", IPR 2019-00208; U.S. Pat. No. 9,808,400; Dated Jun. 6, 2019.
"Decision Instituting Review", IPR 2019-00223; U.S. Pat. No. 9,808,596; Dated Jun. 6, 2019.
"DVD", Entitled "Preventing UTI: Care and Catheterization Techniques"; Publication Date unknown but believed to be prior to 2007.
"EPO Intent to Grant", EPO Application No. 10251024.5; Filed Jun. 2, 2010; dated Nov. 2, 2012.
"Examiner's Answer", U.S. Appl. No. 13/153,265, filed Jun. 3, 2011; dated Dec. 17, 2013.
"Expert Report of Barbara Weintraub", Civil Action No. 1:14-cv-03618; Confidential Information Redacted Pursuant to Court Order; Dated Jun. 14, 2019.
"Expert Report of Barbara Weintraub", Civil Action No. 1:16-cv-03529; Confidential Information Redacted Pursuant to Court Order; Dated Aug. 1, 2019.
"Expert Report of Dr. Edward Yun", Civil Action No. 1:14-cv-03618; Confidential Information Redacted Pursuant to Court Order; Dated Jun. 13, 2019.
"Expert Report of Dr. Edward Yun", Civil Action No. 16-cv-3529; Confidential Information Redacted Pursuant to Court Order; Dated Aug. 1, 2019.
"Expert Report of Dr. Edward Yun Related to Damages, Non-Infringement, and New Evidence of Alleged Secondary Considerations", Civil Action No. 1:14-cv-03618; Confidential Information Redacted Pursuant to Court Order; Dated Jul. 23, 2019.
"Expert Report of Dr. John Abraham", Civil Action No. 1:14-cv-03618; Confidential Information Redacted Pursuant to Court Order; Dated Jun. 14, 2019.
"Expert Report of Dr. John Abraham", Civil Action No. 1:16-cv-03529; Confidential Information Redacted Pursuant to Court Order; Dated Aug. 1, 2019.
"Expert Report of Dr. Steven Brooks", Civil Action No. 14-cv-3618; Confidential Information Redacted Pursuant to Court Order; Dated Jul. 25, 2019.
"Expert Report of Karl R Leinsing, MSME, PE Regarding Alleged Evidence of Secondary Considerations", Civil Action No. 1:14-cv-3618; Confidential Information Redacted Pursuant to Court Order; Dated Jun. 14, 2019.
"Expert Validity Report of Dr. John Abraham", Civil Action No. 1:14-cv-03618; Confidential Information Redacted Pursuant to Court Order Dated Jul. 25, 2019.
"Extended EPO Exam Report", EPO App No. 10251025.2; Filed Jun. 2, 2010; dated Dec. 17, 2013.
Medline Industries, Inc. vs. *C.R. Bard, Inc.*; Exhibit J to Declaration of Nicole M. Smith; Civil Action No. 1:14-cv-03618; Judge John Z. Lee; Filed Jun. 4, 2016.
"Instructions", Naming a character website. URL: <https://web.archive.org/web/20080410122058/http://www.wilihow.com/Make-Your-Own-Anime-or-Mange-Character>. 2008. Retrieved from Internet Dec. 10, 2013.
"Intent to Grant", Chinese Application No. 201180066491.4; Filed Dec. 30, 2011; dated Jul. 6, 2016.
"Intent to Grant", European Application No. 16177903.8-1501; dated Sep. 18, 2017.
"Inter Partes Review—Patent Owner Response", Inter Partes Review—Patent Owner Response; U.S. Pat. No. 8,631,935; Inter Partes Review No. IPR2015-00513; Filed Apr. 21, 2015.
"Inter Partes Review—Patent Owner Response", Inter Partes Review—Patent Owner Response; U.S. Pat. No. 8,448,786; IPR2015-00509; Filed Apr. 22, 2015.
"Inter Partes Review—Patent Owner Response", Inter Partes Review—Patent Owner Response; U.S. Pat. No. 8,631,935; Inter Partes Review No. IPR2015-00511; Filed Apr. 22, 2015.
"Inter Partes Review—Patent Owner Response", Inter Partes Review—Patent Owner Response; U.S. Pat. No. 8,678,190; Inter Partes Review No. IPR2015-00514; Filed Apr. 21, 2015.
"Inter Partes Review—Patent Owner's Prelim Response", U.S. Pat. No. 9,745,088; Inter Partes Review No. IPR2019-00035; Filed Jan. 11, 2019.
"Inter Partes Review—Patent Owner's Prelim Response", U.S. Pat. No. 9,745,088; Inter Partes Review No. IPR2019-00036; Filed Jan. 11, 2019.
"Inter Partes Review No. IPR2019-00109", Petition for Review; U.S. Pat. No. 9,795,761; Filed Oct. 24, 2018.
"Inter Partes Review Petition", Exhibit—Amendment filed on Apr. 3, 2013 for U.S. Appl. No. 12/495,148, filed Jun. 30, 2009.

(56) **References Cited**

OTHER PUBLICATIONS

"Inter Partes Review Petition", Exhibit—Bard DFU; Bardex Infection Control Foley Tray; Copyright 2006, publication date unknown.
"Inter Partes Review Petition", Exhibit—Bardex DFU; Directions for Use/Patient Education Information—Urology; Unknown Publication Date.
"Inter Partes Review Petition", Exhibit—Declaration of Susan Carrow for U.S. Pat. No. 8,631,935 claims 1-4 and 11-20; Mailed Dec. 30, 2014.
"Inter Partes Review Petition", Exhibit—Dorland's Definition of Bag; Dorland's Illustrated Medical Dictionary; 31st Edition; Publication Date Unknown.
"Inter Partes Review Petition", Exhibit—EC Guideline 1998; "A Guideline on the Readability of the Label and Package Leaflet of Medicinal Products for Human Use"; Published Sep. 29, 1998 (Sep. 29, 1998) Mailed Dec. 30, 2014.
"Inter Partes Review Petition", Exhibit—Encyclopedia Dictionary of Medicine, Nursing and Allied Health; Miller Keane, Seventh Edition.
"Inter Partes Review Petition", Exhibit—FAQs "Catheter-Associated Urinary Tract Infection"; Unknown Publisher; Unknown Publication Date.
"Inter Partes Review Petition", Exhibit—Health Protection Scotland; CAUTI Maintenance Bundel; Version 2, Feb. 2008.
"Inter Partes Review Petition", Exhibit—Infection Control Today Article; Medical Center Cuts Catheterizations by 21 Percent with Foley Catheter Management System; Published 2010.
"Inter Partes Review Petition", Exhibit—Kimmel Declaration for U.S. Pat. No. 8,631,935 claims 1-4 and 11-20; Declaration of Dr. Robert M. Kimmel; Mailed Dec. 30, 2014.
"Inter Partes Review Petition", Exhibit—Medical News Today Article; 'Getting to Zero:' Medline's' Erase Cauti Program Helps Hospitals Reduce Catheter Use by 20 Percent; Article Date Apr. 13, 2011.
"Inter Partes Review Petition", Exhibit—Medline Initial Infringement Contentions; *Medline Industries* vs. *C.R. Bard*; Dated Aug. 22, 2014.
"Inter Partes Review Petition", Exhibit—Morning Start Article; "Floyd Medical Center Reduces Catheter-Associated Urinary Tract Infections 83 Percent and Catheter Use by 23 Percent"; Published Jan. 2011.
"Inter Partes Review Petition", Exhibit—Mosby's Pocket Guide Excerpt; Mosby's Pocket Guide to Basic Skills and Procedures; Sixth Edition; Perry & Potter; "Urinary Catheter: Indwelling, Straight, Care and Removal"; Unknown Publication Date.
"Inter Partes Review Petition", Exhibit—Nursing Standard; Article in Learning Zone—Continue Professional Development; "Reducing the risks associated with urinary catheters"; Published Mar. 25, 2009.
"Inter Partes Review Petition", Exhibit—RCE Filed Nov. May 31, 2011 for U.S. Appl. No. 12/495,148, filed Jun. 30, 2009.
"Inter Partes Review Petition", Exhibit—Response to Office Action in U.S. Appl. No. 12/495,148, filed Jun. 30, 2009; Response Filed Nov. 19, 2010.
"Inter Partes Review Petition", Exhibit—The Journal of Healthcare Contracting, Oct. 2012; "Catheter-associated urinary tract infections".
"Inter Partes Review Petition", Exhibit—Webster's Dictionary Definition of Dispose; Webster's Third New International Dictionary; Copyright 2003; publication date unknown.
"Inter Partes Review Petition", Exhibit; Carrow CV—Susan Carrow CV; Mailed Dec. 30, 2014.
"Inter Partes Review Petition", Exhibit; EC Guideline 2009; "Guideline on the Readability of the Labeling and Package Leaflet of Medicinal Products for Human Use"; Revision 1 Published Jan. 12, 2009 (Jan. 12, 2009); Mailed Dec. 30, 2014.
"Inter Partes Review Petition", Exhibit; Kimmel CV—Dr. Robert M. Kimmel; Mailed Dec. 30, 2014.
"Inter Partes Review Petition", IPR Exhibit—Carrow Declaration for U.S. Pat. No. 8,631,935 claims 1-4 and 11-20; Susan Carrow Declaration; Mailed Dec. 30, 2014.
"Inter Partes Review Petition", IPR Exhibit—Carrow Declaration for U.S. Pat. No. 8,768,190; Declaration of Susan Carrow; Mailed Dec. 30, 2014.
"Inter Partes Review Petition", IPR Exhibit—Kimmel Declaration U.S. Pat. No. 8,448,786 Patent; Dr. Robert M. Kimmel Declaration.
"Inter Partes Review Petition", IPR Exhibit—Kimmel Declaration for U.S. Pat. No. 8,631,935 claims 1-4 and 11-20; Declaration of Dr. Robert M. Kimmel; Mailed Dec. 30, 2014.
"Inter Partes Review Petition", IPR Exhibit—Kimmel Declaration for U.S. Pat. No. 8,631,935 claims 7-8, 10, 21-23, 25, 27-28, and 30-34; Declaration of Dr. Robert M. Kimmel; Mailed Dec. 30, 2014.
"Inter Partes Review Petition", IPR Exhibit—Kimmel Declaration for U.S. Pat. No. 8,768,190; Declaration of Dr. Robert M. Kimmel; Mailed Dec. 30, 2014.
"Inter Partes Review Petition", IPR Exhibit—Susan Carrow Declaration U.S. Pat. No. 8,448,786 patent; mailed Dec. 30, 2014.
"Inter Partes Review Petition for U.S. Pat. No. 8,448,786", U.S. Pat. No. 8,448,786 Filed Dec. 30, 2014; Mailed Dec. 30, 2014.
"Inter Partes Review Petition for U.S. Pat. No. 8,631,935", Inter Partes Review Petition for U.S. Pat. No. 8,631,935 for claims 1-4 and 11-20; Filed Dec. 30, 2014.
"Inter Partes Review Petition for U.S. Pat. No. 8,631,935", Inter Partes Review Petition for U.S. Pat. No. 8,631,935 for Claims 7-8, 10, 21-23, 25, 27-28, and 30-34; Filed Dec. 30, 2014.
"Inter Partes Review Petition for U.S. Pat. No. 8,678,190", Inter Partes Review Petition for U.S. Pat. No. 8,678,190; Filed Dec. 30, 2014.
"Inter Partes Review Petition for U.S. Pat. No. 9,745,088", IPR-0036; Filed Oct. 4, 2018.
"Inter Partes Review Petition for U.S. Pat. No. 9,745,088", IPR2019-0035, filed Oct. 4, 2018.
"IPR 2015-00514—Patent Owner's Objection to Evidence", IPR 2015-00514—Patent Owner's Objection to Evidence Submitted During a Preliminary Proceeding; U.S. Pat. No. 8,678,190; Mailed Jul. 13, 2015.
"IPR 2015-00514—Patent Owner's Request for Adverse Judgment", U.S. Pat. No. 8,678,190; Mailed Jul. 23, 2015.
"IPR 2015-00514—Request for Rehearing Denied", IPR2015-00514; U.S. Pat. No. 8,678,190; Decision on Request for Rehearing—Denied; Mailed Jul. 16, 2015.
"IPR 2015-00514 Petitioner's Request for Rehearing", IPR 2015-00514 Petitioner's Request for Rehearing; U.S. Pat. No. 8,678,190; Dated Jul. 10, 2015.
"IPR 2019-00109", Exhibit 1031—Declaration of Jennifer Tomes filed in U.S. Appl. No. 12/647,515 dated Dec. 7, 2012.
"IPR 2019-00109", U.S. Pat. No. 9,795,761; Filed Oct. 24, 2018; Declaration of Dr. Edward Yun.
"IPR Decision Instituting Inter Partes Review", IPR2019-00109; U.S. Pat. No. 9,795,761; Mailed May 6, 2019.
"IPR Exhibit 1002", Declaration of Pliska; IPR2019-0035, Filed Oct. 4, 2018.
"IPR Exhibit 1003", Declaration of Yun; IPR2019-0035; Filed Oct. 4, 2018.
"IPR Exhibit 1022", Email from Medline counsel re claims constructions; IPR2019-0035; Filed Oct. 4, 2018.
"IPR Petition Exhibit 1016", Excerpt from "The Design of Everyday Things"; IPR2019-0035; Filed Oct. 4, 2018.
"IPR Petition Exhibit 1024", Email from Bard counsel re claims constructions; IPR2019-0035; Filed Oct. 4, 2018.
"IPR0215-00513 Scheduling Order", U.S. Pat. No. 8,631,935; Mailed Jul. 15, 2015.
"IPR2015-00509 Institution Decision", IPR2015-00509; U.S. Pat. No. 8,448,786; Mailed Jul. 15, 2015; Decision Denying Institution of Inter Partes Review.
"IPR2015-00511 Institution Decision", IPR2015-00511; U.S. Pat. No. 8,631,935; Entered Jul. 15, 2015; Decision Denying Institution of Inter Partes Review.
"IPR2015-00513—Request for Adverse Judgment", IPR2015-00513—Request for Adverse Judgment; Granted—Proceedings Terminated; U.S. Pat. No. 8,631,935; Entered Aug. 11, 2015.

(56) **References Cited**

OTHER PUBLICATIONS

"IPR2015-00513—Patent Owner's Request for Adverse Judgment", U.S. Pat. No. 8,631,935; Mailed Jul. 23, 2015.
"IPR2015-00513 Institution Decision", IPR2015-00513 Institution Decision; U.S. Pat. No. 8,631,935; Entered Jul. 15, 2015; Decision Institution of Inter Partes Review.
"IPR2015-00514—Scheduling Order", U.S. Pat. No. 8,678,190; Mailed Jun. 26, 2015.
"IPR2015-00514 Decision Institution of Inter Partes Review", IPR2015-00514; U.S. Pat. No. 8,678,190; Mailed Jun. 26, 2015; Decision Institution of Inter Partes Review.
"IPR2015-00514 Judgment—Termination of Proceeding", U.S. Pat. No. 8,678,190; Mailed Jul. 24, 2015.
"IPR2019-00109", Exhibit 1026—Bard's Opening Claim Construction Brief; Civil Action No. 1:17-cv-07216; Dated Oct. 10, 2018; Filed Oct. 24, 2018 as exhibit 1026.
"IPR2019-00109", Exhibit 1030—Medline Industries, Inc.'s Final Infringement Contentions; Filed Jul. 24, 2018 in Civil Action No. 1:17-cv-07216; Filed as exhibit Oct. 24, 2018.
"IPR2019-00109", U.S. Pat. No. 9,795,761; Filed Oct. 24, 2018; Exhibit 1002 Declaration of Michael Plishka.
"Markman Decision", *Medline Industries, Inc.* vs. *C.R. Bard, Inc.*; Case No. 1:16-cv-03529\; Memorandum Opinion and Order; Judge Sharon Johnson Coleman Issued Dec. 28, 2018.
"Markman Hearing", *Medline Industries, Inc.* vs. *C.R. Bard, Inc.*; Case No. 1:17-cv-07216; Memorandum Opinion and Order; Judge Sara L. Ellis; Issued Jan. 28, 2019.
"Medline Catalog", Argyle Trocar Catheter Kits by Covidien; http://www.medline.com/sku/item/MDPSWD565028; Unknown Publication Date but believed to be prior to filing of present application.
"Medline Catalog", Argyle Turkel Safety Thoracentesis System by Covidien; 6"; http://www.medline.com/sku/item/MDPKDL5016; Unknown Publication Date but believed to be prior to filing of present application.
"Medline Catalog", Argyle Turkel Safety Thoracentesis System by Covidien; http://www.medline.com/sku/item/MDPKDL5014; Unknown Publication Date but believe to be prior to filing of present application.
"NonFinal Office Action", U.S. Appl. No. 13/680,902, filed Apr. 11, 2014; dated Dec. 2, 2014.
"Notice of Acceptance", Australian Application No. 2011351971; Filed Dec. 30, 2011; dated May 13, 2016,.
"Notice of Allowance", Canadian Application No. 2,705,647; Filed May 27, 2010; dated Oct. 12, 2017.
"Notice of Allowance", Canadian Application No. 2,705,670; dated Nov. 3, 2017.
"Notice of Allowance", Chinese Application No. 201280035240.4; dated Nov. 7, 2017.
"Office Action", Australian Application No. 2011351971; dated Feb. 18, 2016.
"Office Action", Chinese Application No. 201180066491.4; dated Mar. 24, 2015.
"Office Action", Chinese Application No. 201180066491.4; dated Nov. 11, 2015.
"Office Action", Chinese Application No. 201280035246.1; Filed May 11, 2012; dated Jul. 15, 2016.
"Office Action", Chinese Application No. 201280035246.1; Filed May 11, 2012; dated Nov. 28, 2016.
"Office Action Received", Chinese App No. 201280035246.1; NonFinal OA; dated Sep. 16, 2015.
"Opening Expert Report of Karl R Leinsing, MSME, PE", Civil Action No. 1:14-cv-3618; Confidential Information Redacted Pursuant to Court Order; Dated Jun. 14, 2019.
"Opening Expert Report of Karl R. Leinsing, MSME, PE", Civil Action No. 1:16-cv-3529; Confidential Information Redacted Pursuant to Court Order; Dated Aug. 1, 2019.
"Petition for Inter Partes Review", IPR 2019-00208; U.S. Pat. No. 9,808,400; Filed Nov. 7, 2018.
"Petition for Inter Partes Review", IPR 2019-00223; U.S. Pat. No. 9,808,596; Filed Nov. 7, 2018.
"Publication", European Commission: Pharmaceutical Committee "A Guideline on the Readability of the Label and Package Leaflet of Medicinal Products for Human Use"; Dated Sep. 29, 1998.
"Rebuttal Expert Report of Barbara Weintraub", Civil Action No. 1:14-cv-03618; Confidential Information Redacted Pursuant to Court Order; Dated Jul. 25, 2019.
"Rebuttal Expert Report of Richard Hillstead, PH.D.", Civil Action No. 1:14-cv-3618; Confidential Information Redacted Pursuant to Court Order; Dated Jun. 14, 2019.
"Second Office Action", Chinese Application No. 201280035240.4; dated Jun. 23, 2016.
"Third Office Action", Chinese Application No. 201280035240.4; dated Apr. 1, 2017.
Byun, Sung C."PCT Search Report", PCT/US2011/068193; Filed Dec. 30, 2011; dated Aug. 22, 2012.
Byun, Sung C."PCT Search Report", PCT/US2012/039311; Filed May 24, 2011; dated Oct. 25, 2012.
Byun, Sung Cheal, "PCT Search Report and Written Opinion", PCT/US2012/037524; Filed May 11, 2012; dated Nov. 16, 2012.
Cavanna, Mark, "Ex Parte Quayle Action", U.S. Appl. No. 29/380,474, filed Dec. 6, 2010; Mailed Aug. 14, 2012.
Cavanna, Mark, "Final Oa", U.S. Appl. No. 29/479,600, filed Jan. 17, 2014; Mailed Jun. 1, 2017.
Cavanna, Mark, "NonFinal Oa", U.S. Appl. No. 29/479,600, filed Jan. 17, 2014; Mailed Jan. 3, 2018.
Cavanna, Mark, "NonFinal Office Action", U.S. Appl. No. 29/380,474, filed Dec. 26, 2012; dated Mar. 27, 2012.
Cavanna, Mark, "Non-Final Office Action", U.S. Appl. No. 29/479,600, filed Jan. 17, 2014; dated Sep. 26, 2016.
Cavanna, Mark, "Notice of Allowance", U.S. Appl. No. 29/338,022, filed Jun. 3, 2009; dated Oct. 1, 2009.
Cavanna, Mark, "Notice of Allowance", U.S. Appl. No. 29/362,279, filed May 21, 2010, dated Sep. 19, 2011.
Cavanna, Mark, "Notice of Allowance", U.S. Appl. No. 29/444,526, filed Jan. 31, 2013; dated Oct. 17, 2013.
European Patent Office, "Extended EPO Search Report", Application No. 10251024.5, In the Name of Medline Industries, dated Oct. 18, 2010.
European Patent Office, "Extended EPO Search Report", EPO Application No. 10251025.2, In the Name of Medline Industries, dated Sep. 29, 2010.
Examiner, Chinese Patent Office, "First Office Action", CN Application No. 201020219785.9; dated Nov. 18, 2010; Filed Jun. 3, 2010.
Gilligan, C. Luke, "Notice of Allowance", U.S. Appl. No. 13/153,265, filed Jun. 3, 2011; dated Jun. 15, 2017.
Gimenez Burgos, R, "European Examination Report", European Application No. 11 854 003.8-1659; Ref SJG/P128064EP00; dated Jan. 22, 2015.
Gimenez Burgos, R, "Extended European Search Report", 11854003.8; Filed Dec. 30, 2011; dated Jun. 3, 2014.
Gimenez Burgos, R, "Extended European Search Report", EPO App No. 12 79 3939; Reference No. SJG/P130269EP00; dated Jan. 27, 2015.
Gimenez Burgos, R, "Extended European Search Report", EU App No. 12792423.1-1659/2713933; PCT/US2012039311; Reference No. SJG/P130270EP00; dated Jan. 27, 2015.
Hand, Melanie J., "Final OA", U.S. Appl. No. 12/785,064, filed May 21, 2010; dated Jun. 5, 2013.
Hand, Melanie J., "NonFinal OA", U.S. Appl. No. 12/785,064, filed May 21, 2010; dated Feb. 1, 2013.
Hand, Melanie J., "NonFinal OA", U.S. Appl. No. 13/115,053, filed Jun. 7, 2011; dated May 9, 2013.
Hand, Melanie J., "NonFinal OA", U.S. Appl. No. 13/155,026, filed Jun. 7, 2011; dated Nov. 30, 2012.
Hand, Melanie J., "NonFinal OA", U.S. Appl. No. 13/860,902, filed Apr. 11, 2013; dated Apr. 1, 2016.
Hand, Melanie J., "NonFinal OA", U.S. Appl. No. 14/165,044, filed Jan. 27, 2014; dated Oct. 26, 2015.
Hand, Melanie J., "Notice of Allowance", U.S. Appl. No. 13/155,026, filed Jun. 7, 2011; dated Feb. 1, 2013.
Hand, Melanie J., "Notice of Allowance", U.S. Appl. No. 13/155,054, filed Jun. 7, 2011; dated Oct. 28, 2013.

(56) **References Cited**

OTHER PUBLICATIONS

Hand, Melanie J., "Notice of Allowance", U.S. Appl. No. 13/860,902, filed Apr. 11, 2013; dated Aug. 4, 2015.
Hand, Melanie Jo, "Appeal Decision", U.S. Appl. No. 12/785,064, filed May 21, 2010; May 18, 2016.
Hand, Melanie Jo, "Final OA", U.S. Appl. No. 13/860,902, filed Apr. 11, 2013; dated May 22, 2015.
Klein, Benjamin J., "NonFinal OA", U.S. Appl. No. 15/5051,964, filed Feb. 24, 2016; dated Jan. 7, 2019.
Klein, Benjamin Jacob, "Notice of Allowance", U.S. Appl. No. 15/051,964, filed Feb. 24, 2016; dated Aug. 21, 2019.
Lawrence, Samantha Q., "Notice of Allowance", U.S. Appl. No. 29/479,600, filed Jan. 17, 2014; dated Apr. 25, 2019.
Long, Fonya M, "Appeal Decision", U.S. Appl. No. 13/154,265, filed Jun. 3, 2011; Mailed Oct. 6, 2016.
Mackenzie, Kristian, "Office Action", Canadian Application No. 2,705,647; dated Feb. 10, 2017.
Mackenzie, Kristian, "Office Action", Canadian Application No. 2,705,647; Ref No. 15468-P37235CA00; dated Apr. 21, 2016.
Mackenzie, Kristian, "Office Action", Canadian Application No. 2,705,670; Attorney Ref No. 15468-P37238CA00; dated Feb. 10, 2017.
Mackenzie, Kristian, "Office Action", Canadian Application No. 2,705,670; Ref No. 15468-8; dated Apr. 25, 2016.
Marcetich, Adam, "Non-Final OA", U.S. Appl. No. 15/640,224, filed Jun. 30, 2017; dated Jul. 10, 2019.
Marcetich, Adam, "NonFinal Office Action", U.S. Appl. No. 15/684,787, filed Aug. 23, 2017; dated Nov. 4, 2019.
Marcetich, Adam, "Notice of Allowance", U.S. Appl. No. 13/860,902, filed Apr. 11, 2013; dated Nov. 8, 2016.
Marcetich, Adam, "Notice of Allowance", U.S. Appl. No. 13/860,902, filed Apr. 11, 2013; dated Sep. 14, 2016.
Marcetich, Adam, "Notice of Allowance", U.S. Appl. No. 14/165,044, filed Jan. 27, 2014; dated Feb. 28, 2017.
Marcetich, Adam, "Notice of Allowance", U.S. Appl. No. 14/793,455, filed Jul. 7, 2015; dated Jul. 20, 2017.
Marcetich, Adam M., "Final OA", U.S. Appl. No. 14/165,044, filed Jan. 27, 2014; dated Aug. 11, 2016.
Marcetich, Adam M., "Notice of Allowance", U.S. Appl. No. 15/640,224, filed Jun. 30, 2017; dated Nov. 21, 2019.
Marcitech, Adam, "NonFinal OA", U.S. Appl. No. 14/793,455, filed Jul. 7, 2015; dated May 3, 2017.
Medline, "Medline Article/Brochure", Published 2008.
Mian, Ali, "Non-Final Office Action", Canadian Application No. 2,837,324; dated Oct. 3, 2018.
Mian, Ali, "Office Action", Canadian Application No. 2,837,324; dated Sep. 3, 2019.
Ortega, Rafael et al., "Female Urethral Catheterization", N. Engl. J. Med vol. 358:e15; published 2008.
Pass, Natalie, "Final OA", U.S. Appl. No. 13/153,265, filed Jun. 3, 2011; dated Jul. 12, 2013.
Pass, Natalie, "NonFinal OA", U.S. Appl. No. 13/153,265, filed Jun. 3, 2011; dated Mar. 5, 2013.
Poon, Robert, "Appeal Decision", U.S. Appl. No. 12/647,515, filed Dec. 27, 2009; Mailed Jan. 19, 2018.
Poon, Robert, "Appeal Decision", U.S. Appl. No. 13/153,300, filed Jun. 3, 2011; Mailed Oct. 12, 2016.
Poon, Robert, "Appeal Decision", U.S. Appl. No. 13/374,509, filed Dec. 30, 2011; Mailed Oct. 24, 2016.
Poon, Robert, "Appeal Decision", U.S. Appl. No. 14/265,920, filed Apr. 30, 2014; Mailed Aug. 1, 2018.
Poon, Robert, "Final OA", U.S. Appl. No. 12/647,515, filed Dec. 27, 2009; Mailed Apr. 7, 2015.
Poon, Robert, "Final OA", U.S. Appl. No. 12/647,515, filed Dec. 27, 2009; Mailed May 13, 2013.
Poon, Robert, "Final OA", U.S. Appl. No. 12/846,675, filed Jul. 29, 2010; Mailed Dec. 18, 2013.
Poon, Robert, "Final OA", U.S. Appl. No. 13/153,300, filed Jun. 3, 2011 Mailed Aug. 6, 2013.
Poon, Robert, "Final OA", U.S. Appl. No. 13/374,509, filed Dec. 30, 2011; Mailed Aug. 6, 2013.
Poon, Robert, "Final OA", U.S. Appl. No. 14/265,909, filed Apr. 30, 2014; Mailed Jan. 10, 2017.
Poon, Robert, "Final OA", U.S. Appl. No. 14/265,909, filed Apr. 30, 2015; Mailed Oct. 5, 2015.
Poon, Robert, "Final OA", U.S. Appl. No. 14/265,920, filed Apr. 30, 2014; Mailed Oct. 2, 2015.
Poon, Robert, "Final OA", U.S. Appl. No. 14/718,792, filed May 21, 2015; Mailed Jan. 5, 2016.
Poon, Robert, "Final OA", U.S. Appl. No. 15/067,903, filed Mar. 11, 2016; Mailed Jan. 13, 2017.
Poon, Robert, "Final Office Action", U.S. Appl. No. 12/495,148, filed Jun. 30, 2009, dated Mar. 3, 2011.
Poon, Robert, "Final Office Action", U.S. Appl. No. 12/495,148, filed Jun. 30, 2009; dated Jul. 31, 2013.
Poon, Robert, "Final Office Action", U.S. Appl. No. 12/846,675, filed Jul. 29, 2010; dated Sep. 26, 2012.
Poon, Robert, "Final Office Action", U.S. Appl. No. 14/718,912, filed May 21, 2015; dated Jan. 5, 2016.
Poon, Robert, "Final Office Action", U.S. Appl. No. 15/703,514, filed Sep. 13, 2017; dated May 2, 2019.
Poon, Robert, "Final Office Action", U.S. Appl. No. 15/703,514; dated May 2, 2019.
Poon, Robert, "Final Office Action", U.S. Appl. No. 15/803,383, filed Nov. 3, 2017; dated Jul. 25, 2019.
Poon, Robert, "Final Office Action", U.S. Appl. No. 15/804,520, filed Nov. 6, 2017; dated Aug. 8, 2019.
Poon, Robert, "NonFinal OA", U.S. Appl. No. 12/495,148, filed Jun. 30, 2009; Mailed Oct. 4, 2012.
Poon, Robert, "NonFinal OA", U.S. Appl. No. 12/647,515, filed Dec. 27, 2009; Mailed Dec. 18, 2013.
Poon, Robert, "NonFinal OA", U.S. Appl. No. 12/846,675, filed Jul. 29, 2010; Mailed Sep. 10, 2013.
Poon, Robert, "NonFinal OA", U.S. Appl. No. 14/265,909, filed Apr. 30, 2014; Mailed Sep. 12, 2016.
Poon, Robert, "NonFinal OA", U.S. Appl. No. 14/265,909, filed Apr. 30, 2014; Mailed Dec. 31, 2014.
Poon, Robert, "NonFinal OA", U.S. Appl. No. 14/265,920, filed Apr. 30, 2014; Mailed Dec. 30, 2014.
Poon, Robert, "NonFinal OA", U.S. Appl. No. 14/718,792, filed May 21, 2015; Mailed Nov. 19, 2015.
Poon, Robert, "NonFinal OA", U.S. Appl. No. 15/067,903, filed Mar. 11, 2016; Mailed Jun. 30, 2016.
Poon, Robert, "NonFinal OA", U.S. Appl. No. 15/803,383, filed Nov. 3, 2017; Mailed Mar. 7, 2018.
Poon, Robert, "NonFinal OA", U.S. Appl. No. 15/804,520, filed Nov. 6, 2017; Mailed Jan. 19, 2018.
Poon, Robert, "Non-Final OA", U.S. Appl. No. 14/265,909, filed Apr. 30, 2014; Mailed Aug. 24, 2017.
Poon, Robert, "NonFinal Office Action", U.S. Appl. No. 15/703,514, filed Sep. 13, 2017; dated Jun. 22, 2018.
Poon, Robert, "NonFinal Office Action", U.S. Appl. No. 12/647,515, filed Dec. 27, 2009; dated Jun. 28, 2012.
Poon, Robert, "NonFinal Office Action", U.S. Appl. No. 12/846,675, filed Jul. 29, 2010; dated Dec. 22, 2011.
Poon, Robert, "NonFinal Office Action", U.S. Appl. No. 13/153,300, filed Jun. 3, 2011; dated Oct. 1, 2012.
Poon, Robert, "NonFinal Office Action", U.S. Appl. No. 13/374,509, filed Dec. 30, 2011; dated Oct. 2, 2012.
Poon, Robert, "NonFinal Office Action", U.S. Appl. No. 15/804,520, filed Nov. 6, 2017; dated Jun. 6, 2018.
Poon, Robert, "NonFinal Office Action", U.S. Appl. No. 16/258,231, filed Jan. 25, 2019; dated Oct. 2, 2019.
Poon, Robert, "Non-Final Office Action", U.S. Appl. No. 12/495,148, filed Jun. 30, 2009; first inventor: Jennifer E. Tomes; dated Aug. 4, 2010.
Poon, Robert, "Non-Final Office Action", U.S. Appl. No. 15/803,393, filed Nov. 3, 2017; dated Oct. 15, 2018.
Poon, Robert, "Non-Final Office Action", U.S. Appl. No. 15/804,520, filed Nov. 6, 2017; dated Nov. 2, 2018.
Poon, Robert, "Notice of Allowance", U.S. Appl. No. 12/495,148, filed Jun. 30, 2009; dated Nov. 20, 2013.

(56) **References Cited**

OTHER PUBLICATIONS

Poon, Robert, "Notice of Allowance", U.S. Appl. No. 12/846,675, filed Jul. 29, 2010; dated Apr. 30, 2014.
Poon, Robert, "Notice of Allowance", U.S. Appl. No. 14/265,920, filed Apr. 30, 2014; dated Nov. 28, 2018.
Poon, Robert, "Notice of Allowance", U.S. Appl. No. 14/718,792, filed May 21, 2015; dated Feb. 2, 2016.
Poon, Robert, "Notice of Allowance", U.S. Appl. No. 14/265,909, filed Apr. 30, 2014; dated Oct. 2, 2017.
Poon, Robert, "Notice of allowance", U.S. Appl. No. 15/067,903, filed Mar. 11, 2016; dated Aug. 23, 2017.
Poon, Robert, "Restriction Requirement", U.S. Appl. No. 12/647,515, filed Dec. 27, 2009; dated May 23, 2012.
Pothier, Andrew, "NonFinal OA", Canadian Application No. 2,837,289; Mailed Feb. 14, 2018.
Pothier, Andrew, "NonFinal Office Action", Canadian Patent Application No. 2,822,905; Reference No. 15468-P44352CA00; dated Aug. 31, 2018.
Pothier, Andrew, "Non-Final Office Action", Canadian Application No. 2,837,289; dated Jun. 27, 2019.
Pothier, Andrew, "Non-Final Office Action", Canadian Application No. 2,822,905; File No. 15468-P44352CA00; dated Dec. 18, 2017.
Pothier, Andrew, "Office Action", Canadian Application No. 2,822,905; dated Jun. 13, 2019.
Pothier, Andrew, "Office Action", Canadian Application No. 2,822,905; Reference No. 15468-P44352CA00; dated May 1, 2017.
Pothier, Andrew, "Office Action", Canadian Application No. 2,837,289; dated Oct. 29, 2018.
Power, "Postoperative behavior changes and pain in children, 2 to 12 years, following inpatient and day case surgery", University College London; http://discovery.ucl.ac.uk/643438/1/643438.pdf, Aug. 2010.
Prange, Sharon M., "Response to First Office Action", U.S. Appl. No. 12/004,796, filed Dec. 21, 2007; dated Oct. 28, 2009.
Schultz, Ottmar, "Extended European Search Report", EP Application No. 16177903.8-1501; Filed Jun. 30, 2009; dated Oct. 27, 2016.
Thomsen, Todd, "Male Urethral Catheterization", N. Engl. J. Med vol. 354:e22; Published 2006.
Van Poelgeest, A, "Exam Report", EP Application No. 12792423.1; dated Sep. 17, 2019.
Van Poelgeest, A, "Exam Report", European Application No. 12793939.5; dated Oct. 7, 2019.
Van Poelgeest, A, "Examination Report", EP Application No. 11 854 003.8-1113; dated Sep. 17, 2019.
Vasat, Peter, "NonFinal OA", U.S. Appl. No. 12/785,064, filed May 21, 2010; Mailed Feb. 9, 2018.
Vasat, Peter, "Notice of Allowance", U.S. Appl. No. 12/785,064, filed May 21, 2010; dated Sep. 12, 2016.
Yuan, Minqiang, "Non-Final Office Action", Chinese Application No. 200920267201.2, dated Sep. 9, 2010.
Yuan, Minquiang, "Non-Final Office Action", Chinese Application No. 200920267201.2, dated Jun. 4, 2010.
Zeev, et al., "Family-centered Preparation for Surgery Improves Perioperative Outcomes in Children: A randomized Controlled Trial", Anesthesiology, 106, pp. 65-74; https://anesthesiology.pubs.asahq.org/article.aspx?articleid=1922803 ; Jan. 2007.
Lawrence, Samantha , "Notice of Allowance", U.S. Appl. No. 29/479,600, filed Jan. 17, 2014; dated Feb. 24, 2020.
Marcetich, Adam , "Notice of Allowance", U.S. Appl. No. 15/684,787, filed Aug. 23, 2017; dated Feb. 27, 2020.
Poon, Robert , "NonFinal Office Action", U.S. Appl. No. 15/703,514, filed Sep. 13, 2017; dated Mar. 17, 2020.
Poon, Robert , "Non-Final Office Action", U.S. Appl. No. 15/803,383 filed Nov. 3, 2017; dated Mar. 16, 2020.
"Summons to Attend Oral Proceedings", EP Application 11854003.8; Mailed Dec. 22, 2020.
"Summons to Attend Oral Proceedings", EP Application 12792423.1; Mailed Dec. 22, 2020.
"Summons to Attend Oral Proceedings", EP Application 12793939.5; Mailed Dec. 23, 2020.
Arble, Jessica , "Final OA", U.S. Appl. No. 15/977,944, filed May 11, 2018; Mailed Aug. 5, 2020.
Arble, Jessica , "NonFinal Office Action", U.S. Appl. No. 15/977,944, filed May 11, 2018; dated Apr. 28, 2020.
Arble, Jessica , "NonFinal Office Action", U.S. Appl. No. 15/977,944, filed May 11, 2018; dated Feb. 3, 2021.
Arble, Jessica , "Notice of Allowance", U.S. Appl. No. 15/977,944, filed May 11, 2018; dated Aug. 17, 2021.
Poon, Robert , "Final Office Action", U.S. Appl. No. 16/258,231, filed Jan. 25, 2019; dated Jul. 15, 2020.
Poon, Robert , "NonFinal Office Action", U.S. Appl. No. 16/258,231, filed Jan. 25, 2019; dated Mar. 31, 2021.
Poon, Robert , "Notice of Allowance", U.S. Appl. No. 15/703,514, filed Sep. 13, 2017; dated Nov. 23, 2020.
Poon, Robert , "Notice of Allowance", U.S. Appl. No. 15/803,383, filed Nov. 3, 2017; dated Nov. 27, 2020.
JP2000281144-A Machine translation Oct. 17, 2022; Cited in U.S. Appl. No. 16/721,718 on Oct. 26, 2022.
JP2002068309-A Machine translation Oct. 17, 2022; Cited in U.S. Appl. No. 16/721,718 on Oct. 26, 2022.
Klein, Benjamin , "Non-Final Office Action", U.S. Appl. No. 16/688,185, filed Nov. 19, 2019; dated Jan. 31, 2023.
Marcetich, Adam M. , "Notice of Allowance", U.S. Appl. No. 16/721,718, filed Dec. 19, 2019; dated Oct. 26, 2022.
Marcetich, Adam M. , "Non-Final Office Action", U.S. Appl. No. 16/944,667, filed Jul. 31, 2020; dated Oct. 7, 2022.
Poon, Robert , "NonFinal Office Action", U.S. Appl. No. 17/835,747, filed Jun. 8, 2022; dated Oct. 12, 2022.
Marcetich, Adam M. , "Notice of Allowance", U.S. Appl. No. 16/721,718, filed Dec. 19, 2019; dated Feb. 9, 2023.
Reip, David O. , "Re-Exam Non-Final Office Action", U.S. Appl. No. 90/015,051, filed Jun. 8, 2022; dated Dec. 14, 2022.
C. R. Bard, Inc. v. *Medline Industries, Inc.*, 2020-1900, 2020-1905, 2020-1908, 2020-1910 Slip Opinion (Fed. Cir. 2021). Dated Aug. 13, 2021.
"Ex Parte Reexamination Request", Reexmination Control No. 90/015,051 for U.S. Pat. No. 9,522,753; dated Jun. 28, 2022; Request and Exhibits 1-28.
"Request for Ex Parte Reexamination", Reexam Control No. 90/014,964 for U.S. Pat. No. 8,448,786; Mailed Mar. 8, 2022; Request and Exhibits 1-35.
Poon, Robert , "Final Office Action", U.S. Appl. No. 16/258,231, filed Jan. 25, 2019; dated Oct. 7, 2021.
Poon, Robert , "Final Office Action", U.S. Appl. No. 16/986,803, filed Aug. 6, 2020; dated Jul. 5, 2022.
Poon, Robert , "Final Office Action", U.S. Appl. No. 17/180,680, filed Feb. 19, 2021; dated Sep. 16, 2022.
Poon, Robert , "Non-Final Office Action", U.S. Appl. No. 17/180,680; dated Dec. 22, 2021.
Reip, David Owen , "Ex Parte Reexamination Order—Request Granted", Reexam Control No. 90/014,964 for U.S. Pat. No. 8,448,786; Mailed Apr. 19, 2022.
Reip, David Owen , "Ex Parte Reexamination Order—Request Granted", Reexmination Control No. 90/015,051 for U.S. Pat. No. 9,522,753; Mailed Jul. 7, 2022.
Reip, David Owen , "Reexam NonFinal Office Action", U.S. Appl. No. 90/014,964, filed Feb. 24, 2022; dated Sep. 29, 2022.
Reip, David O., "Notice of Invent to Issue Ex Parte Reexam Certificate", U.S. Appl. No. 90/014,964; Patent Under Reexam 8448786; dated Mar. 21, 2023.
Reip, David O., "ReExamination Final Office Action", U.S. Appl. No. 90/015,051; filed Jun. 8, 2022; Patent Under Reexam 9522753; dated Apr. 4, 2023.

* cited by examiner

Bard Exhibit 1001.0014

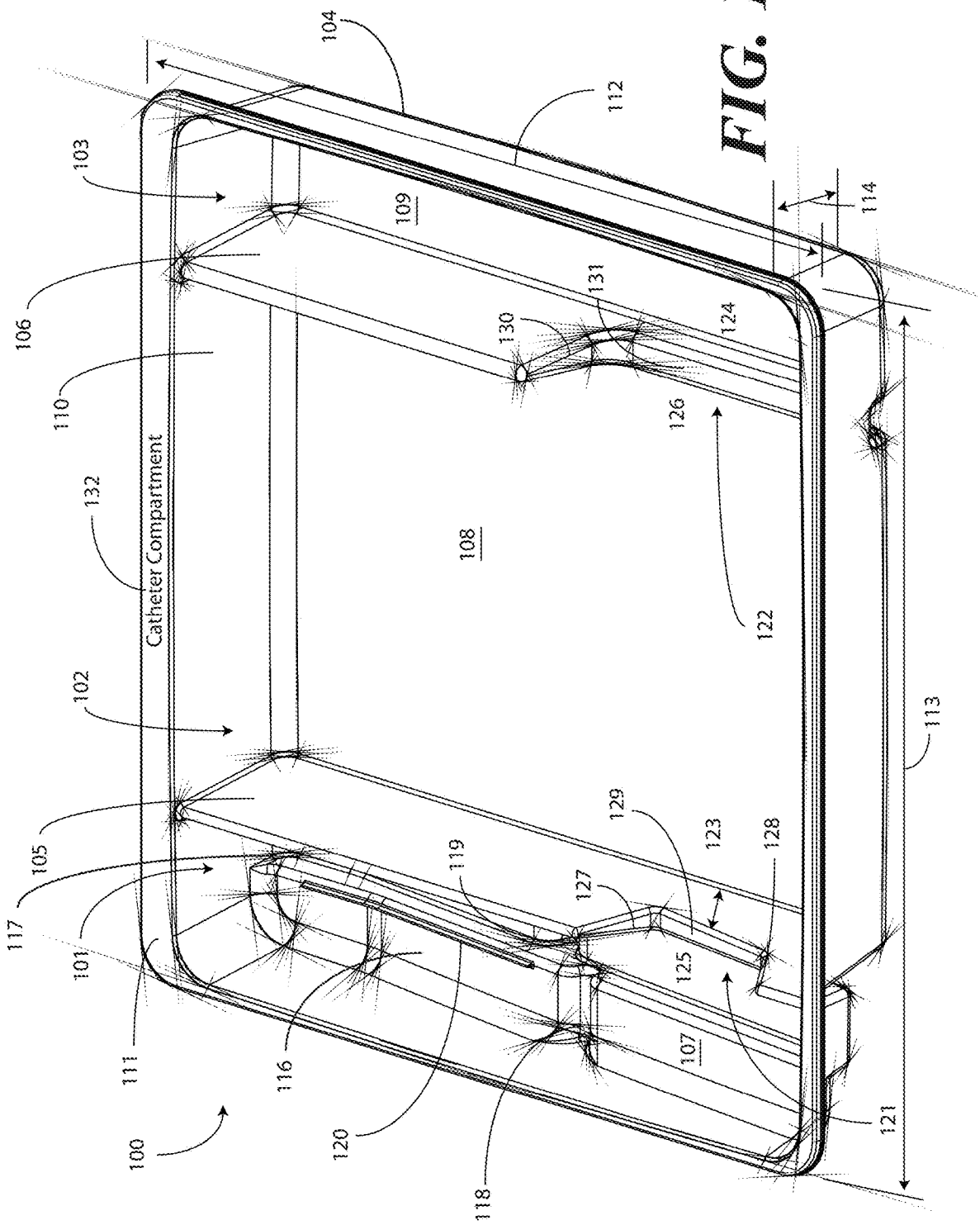

FIG. 1

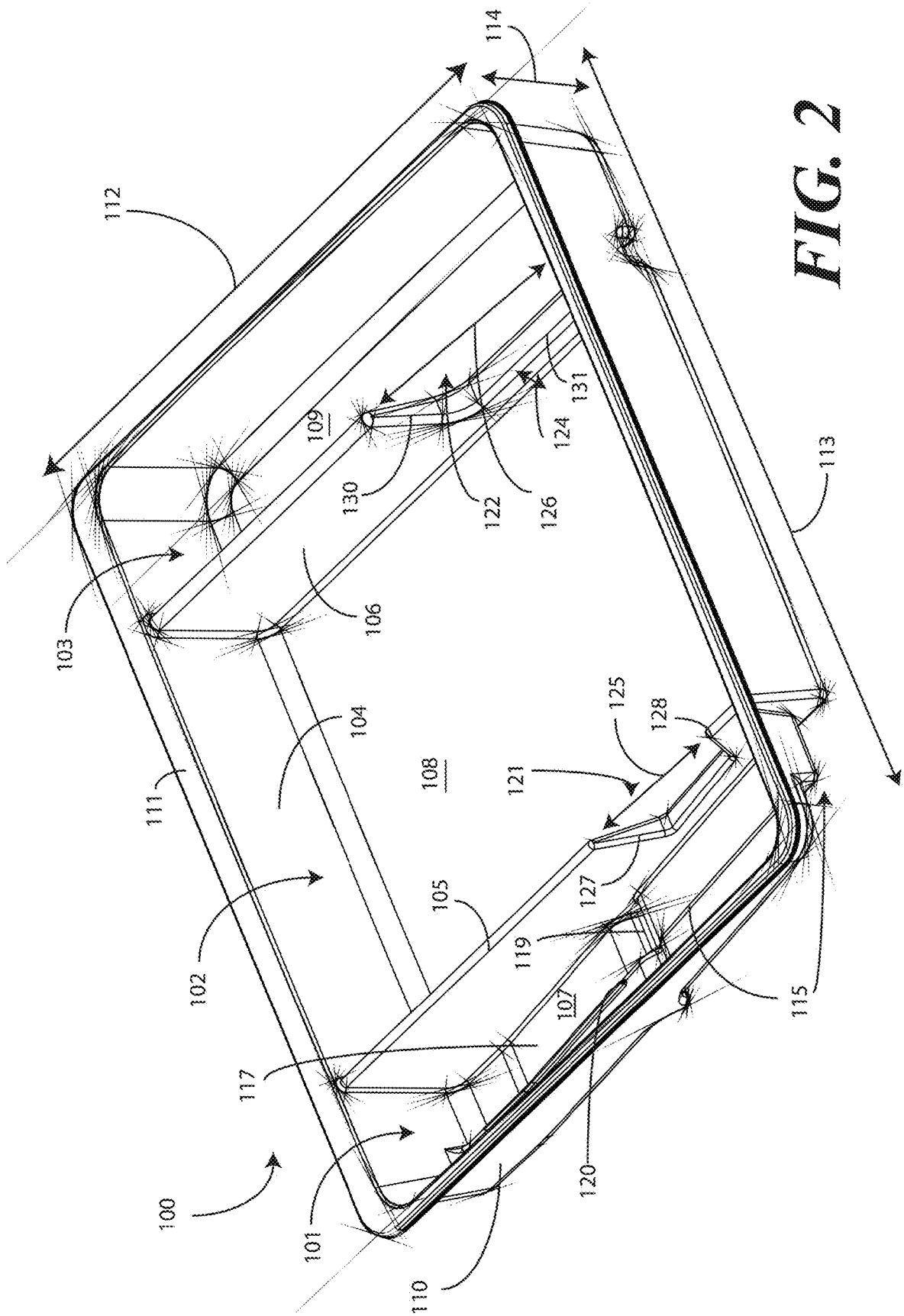
100
101
102
103
104
105
106
107
108
109
110
111
112
113
114
115
117
119
120
121
122
124
125
126
127
128
130
131

FIG. 2

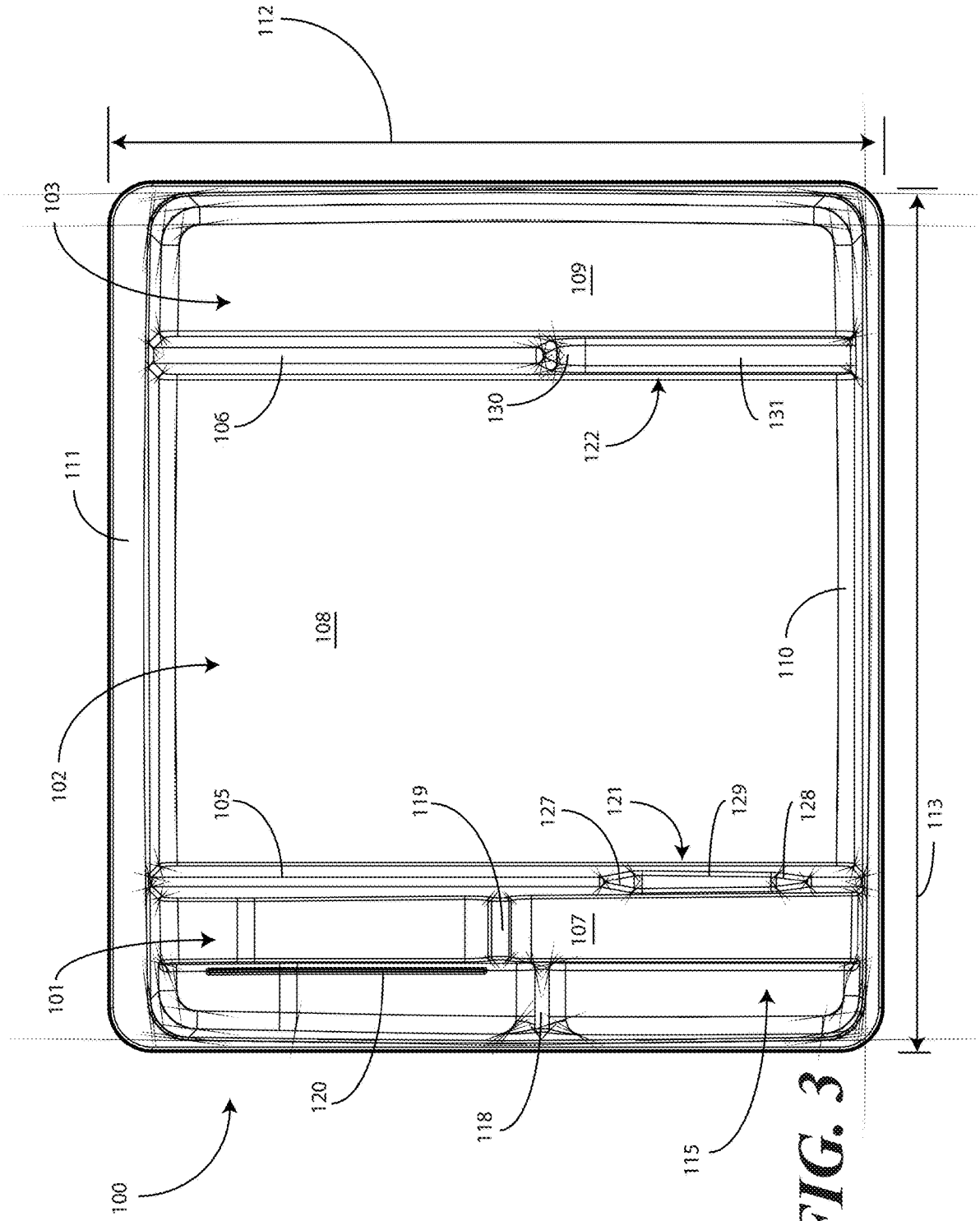
112
103
109
106
130
122
131
111
108
110
102
105
119
127
121
129
128
113
101
107
120
118
115
100

FIG. 3

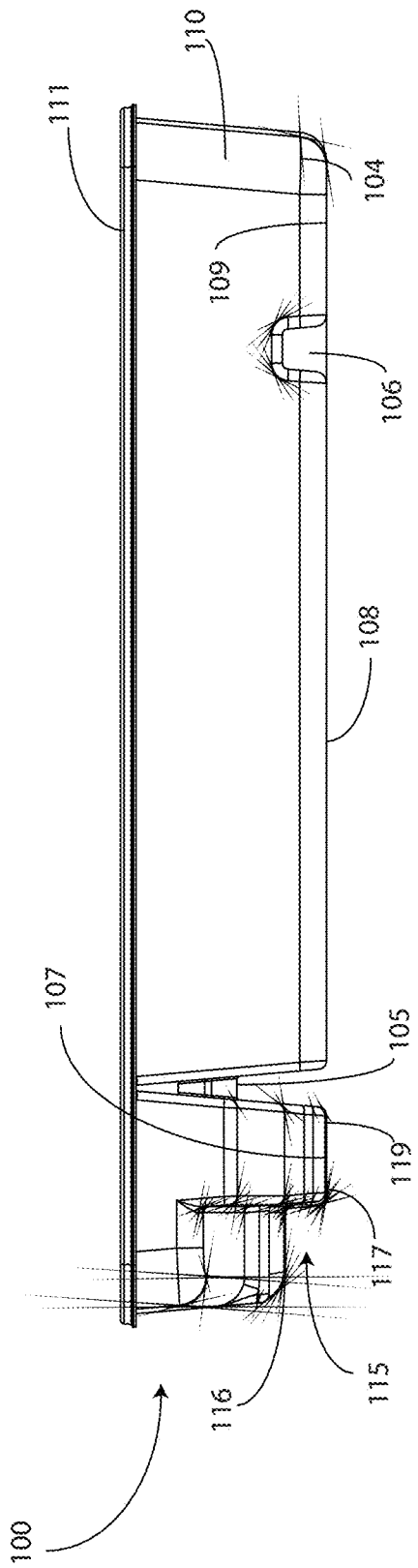
100
116
115
117
119
107
105
108
106
109
104
111
110

FIG. 4

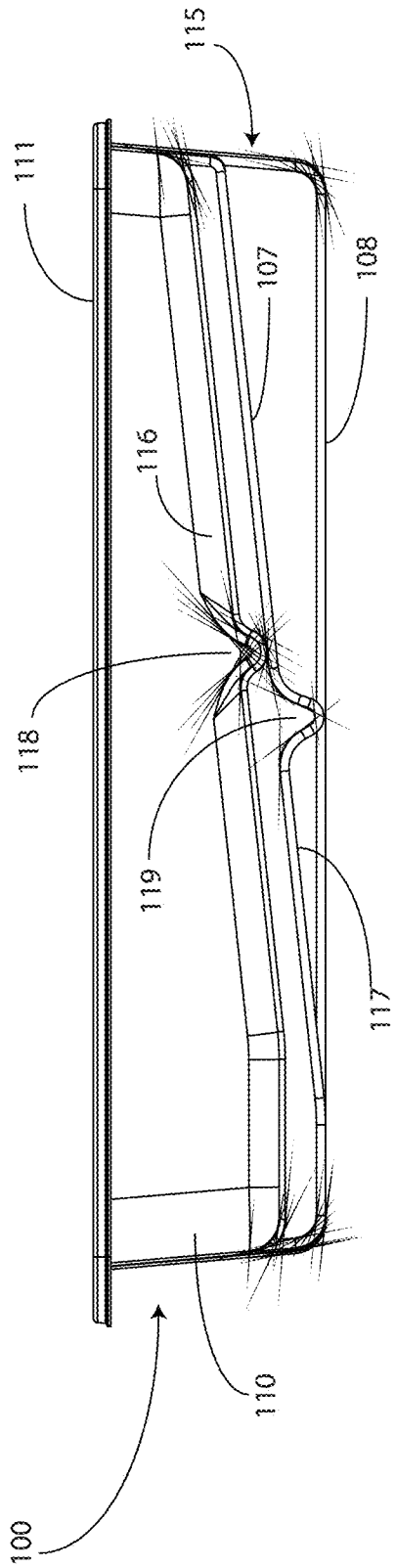
100
110
117
119
118
116
107
108
111
115

FIG. 5

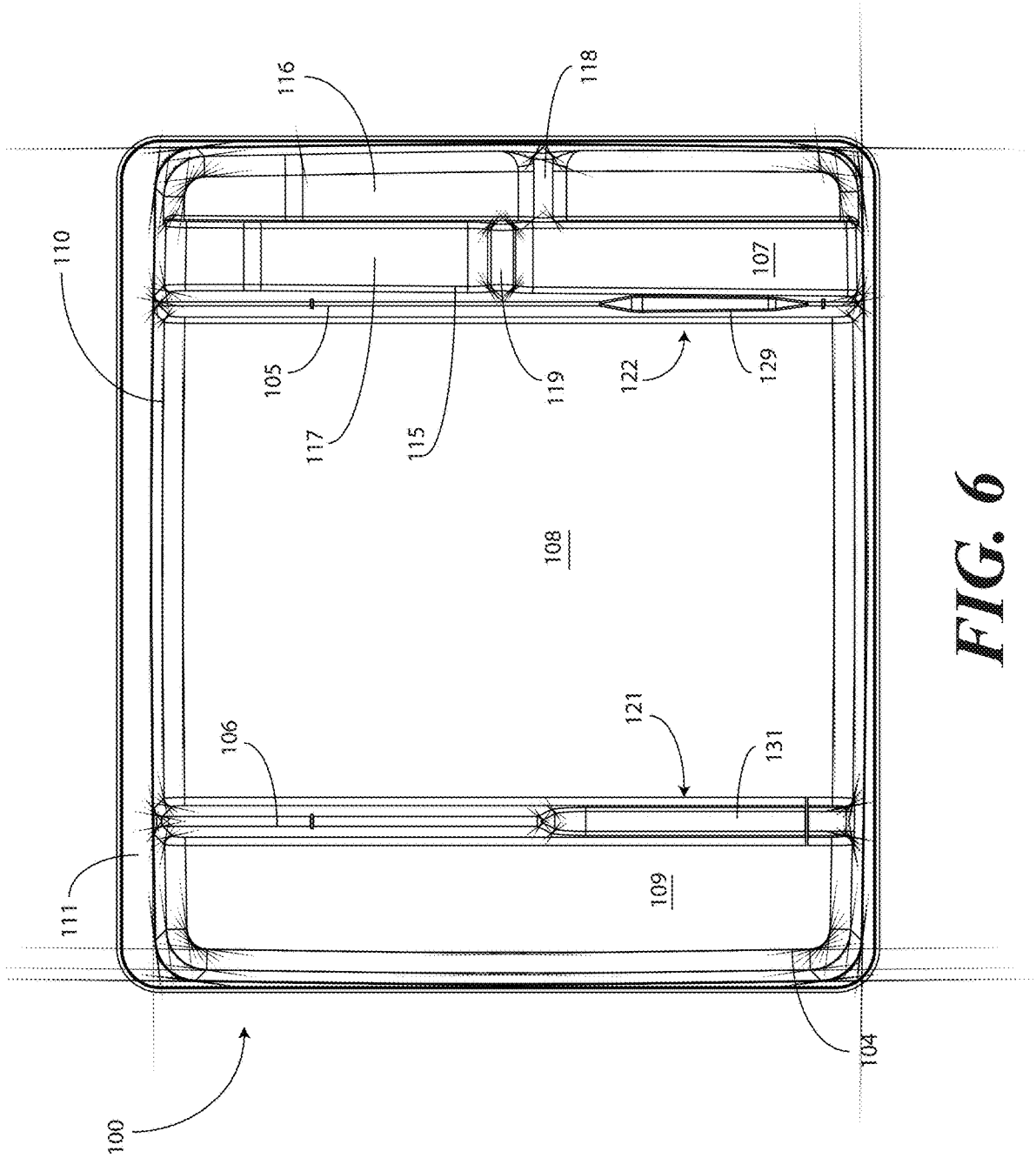
116
118
110
107
105
117
115
119
122
129
108
121
106
131
111
109
104
100

FIG. 6

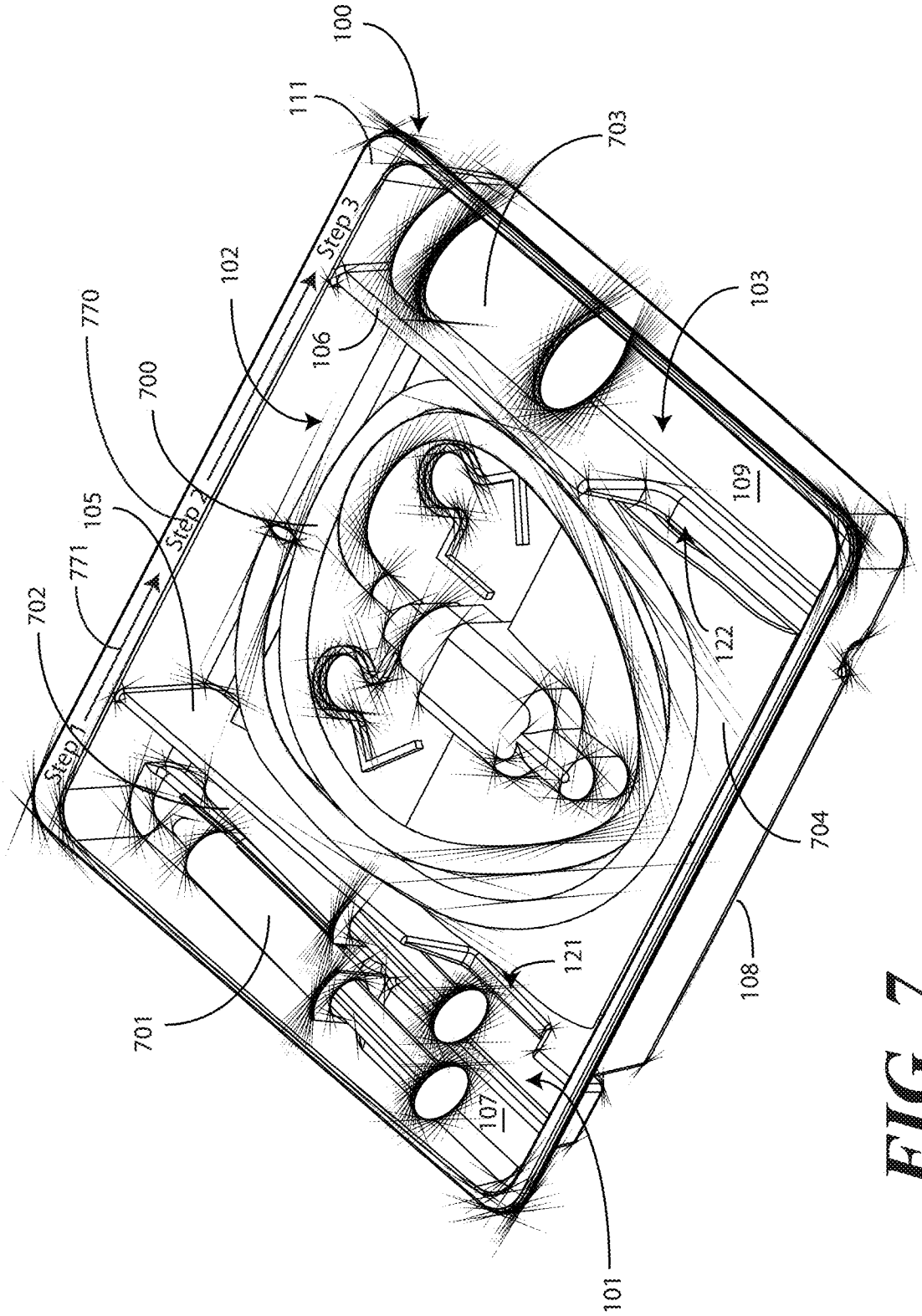
100
111
703
Step 3
102
103
770
106
700
109
105
Step 2
771
702
122
Step 1
704
121
108
701
107
101

FIG. 7

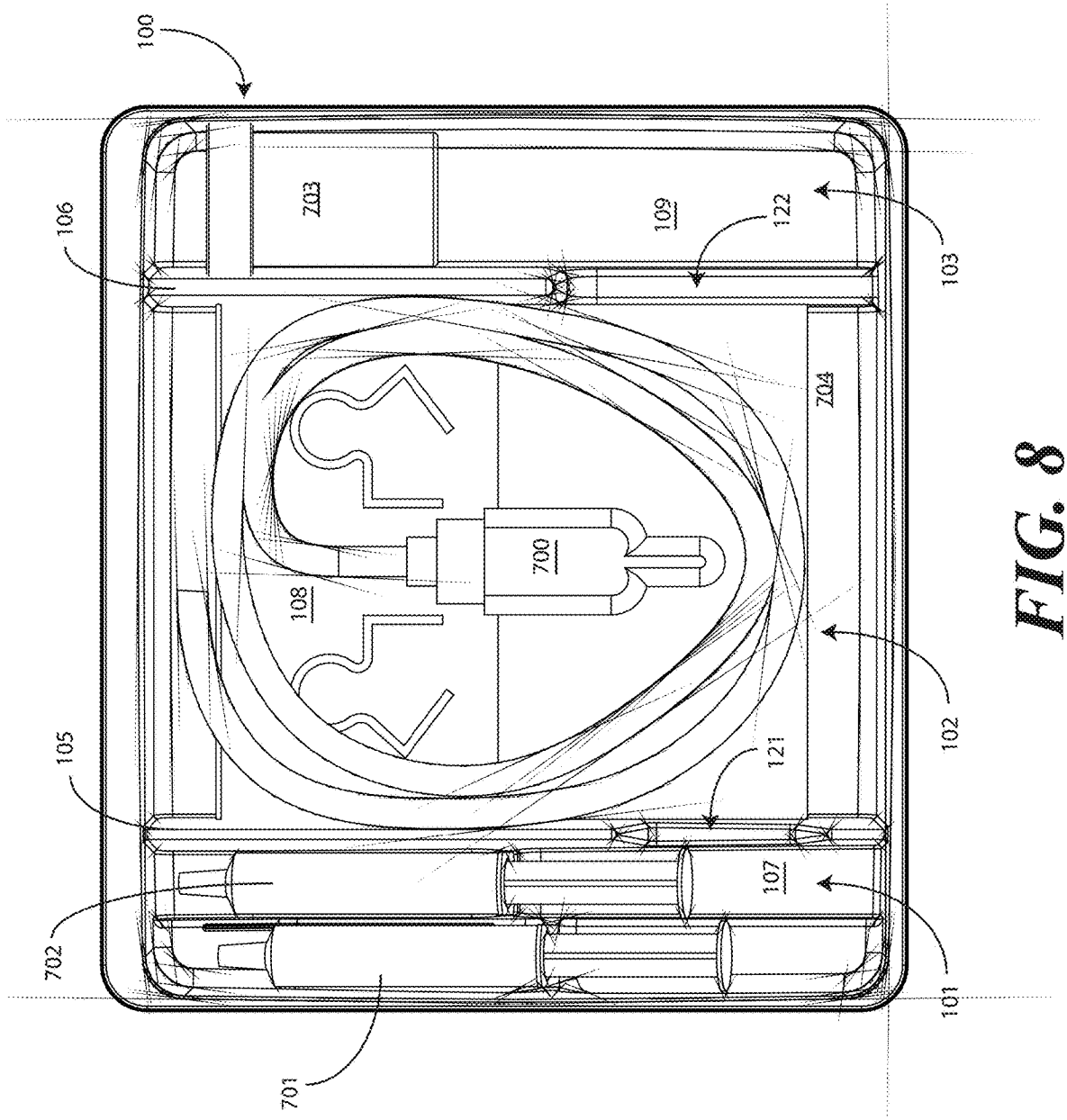

FIG. 8

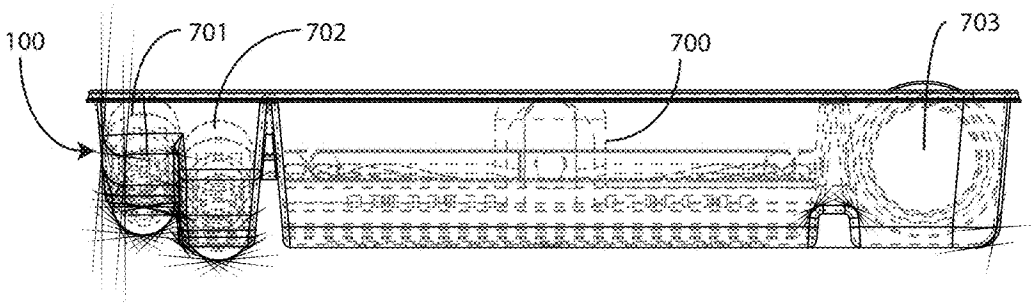
100
701
702
700
703

FIG. 9

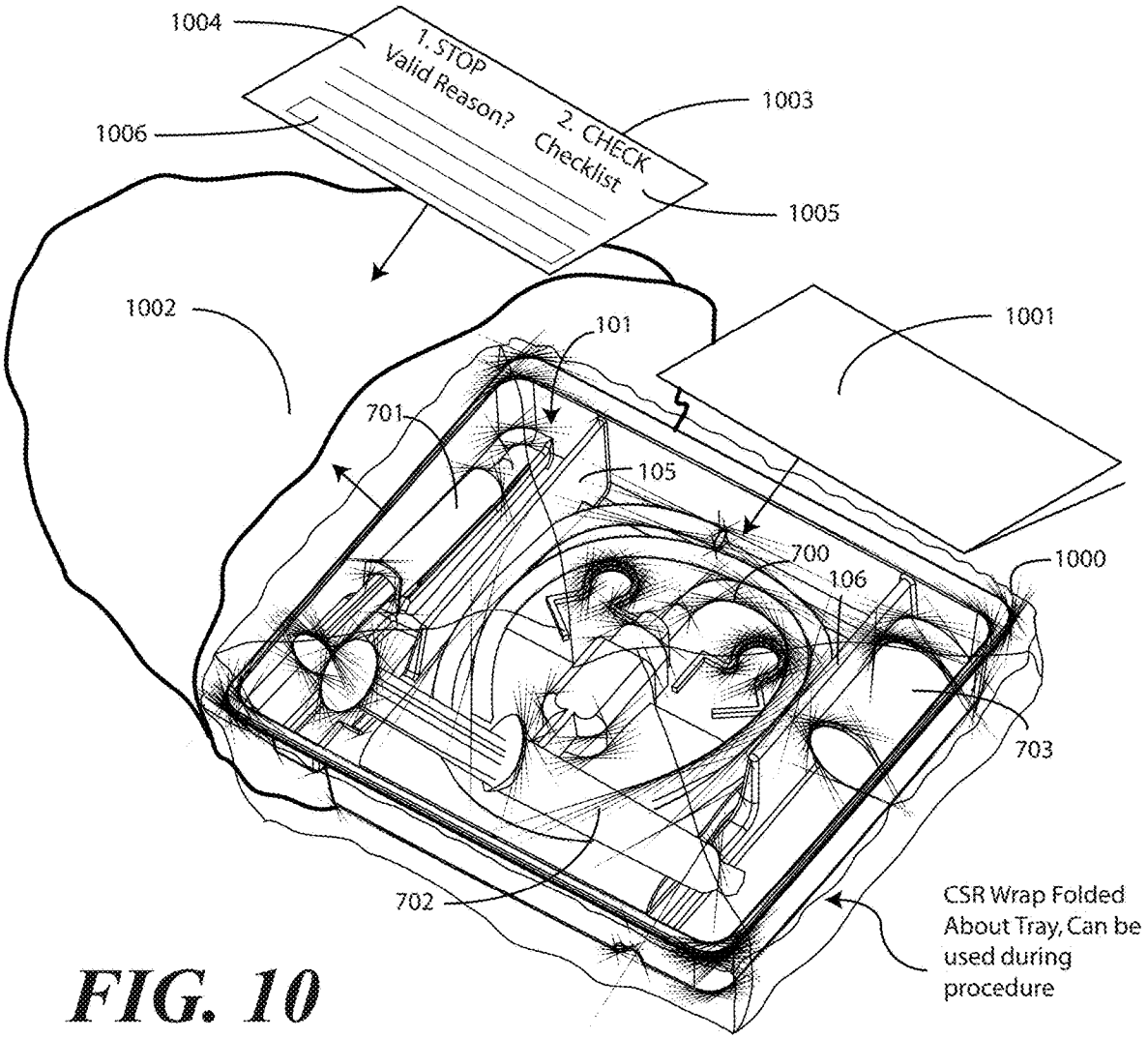
1004
1. STOP
Valid Reason?
2. CHECK
Checklist
1003
1006
1005
1002
101
1001
701
105
700
106
1000
703
702
CSR Wrap Folded
About Tray, Can be
used during
procedure

FIG. 10

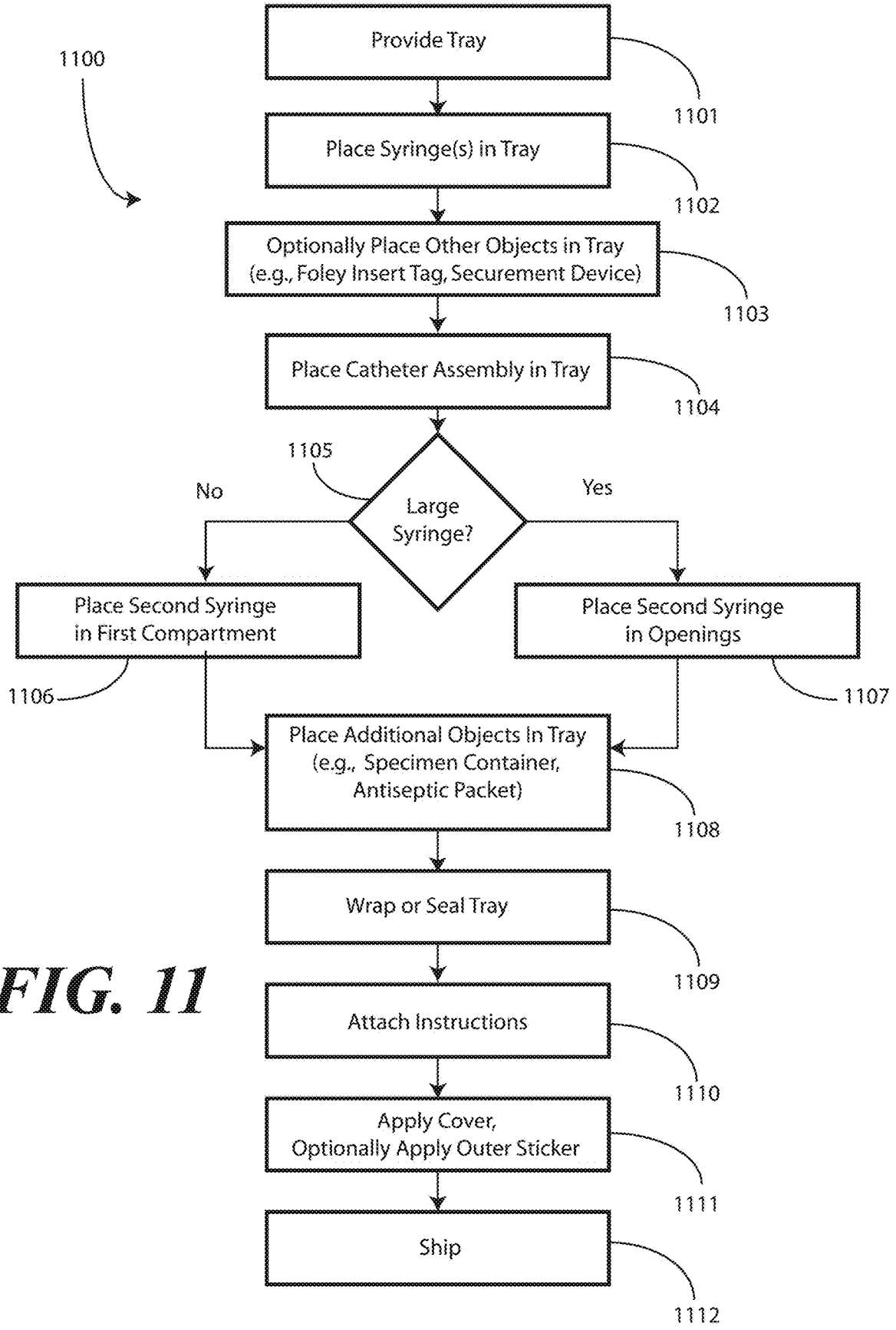
1100
Provide Tray
1101
Place Syringe(s) in Tray
1102
Optionally Place Other Objects in Tray
(e.g., Foley Insert Tag, Securement Device)
1103
Place Catheter Assembly in Tray
1104
1105
Large Syringe?
No
Yes
Place Second Syringe in First Compartment
1106
Place Second Syringe in Openings
1107
Place Additional Objects In Tray
(e.g., Specimen Container, Antiseptic Packet)
1108
Wrap or Seal Tray
1109
Attach Instructions
1110
Apply Cover,
Optionally Apply Outer Sticker
1111
Ship
1112

FIG. 11

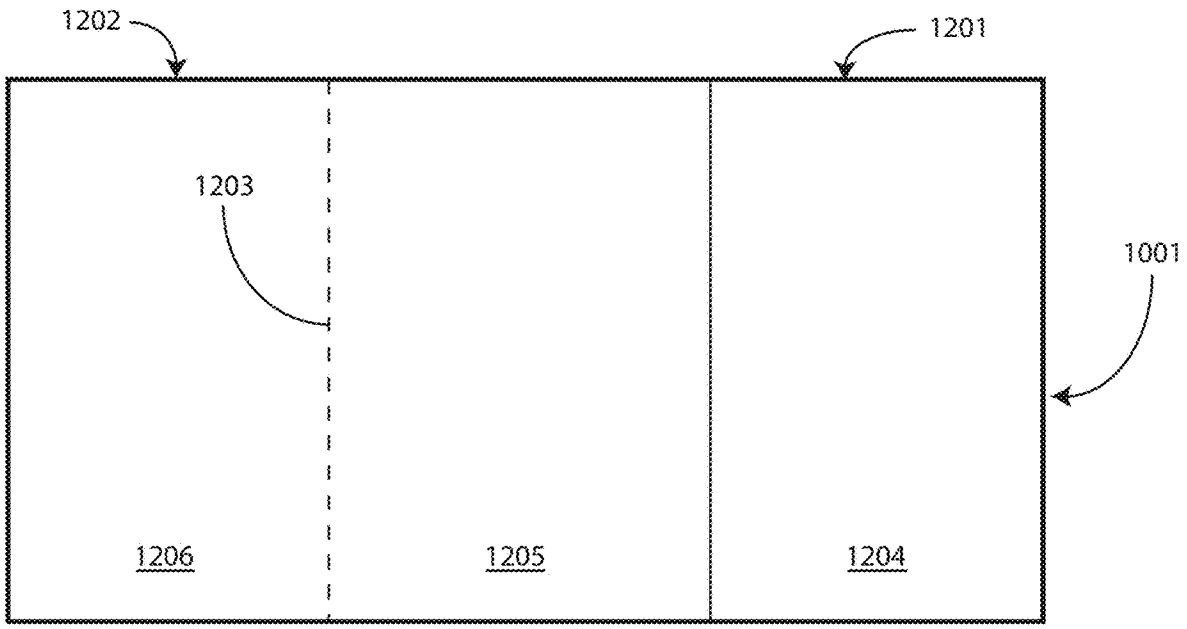
1202
1201
1203
1001
1206
1205
1204

FIG. 12

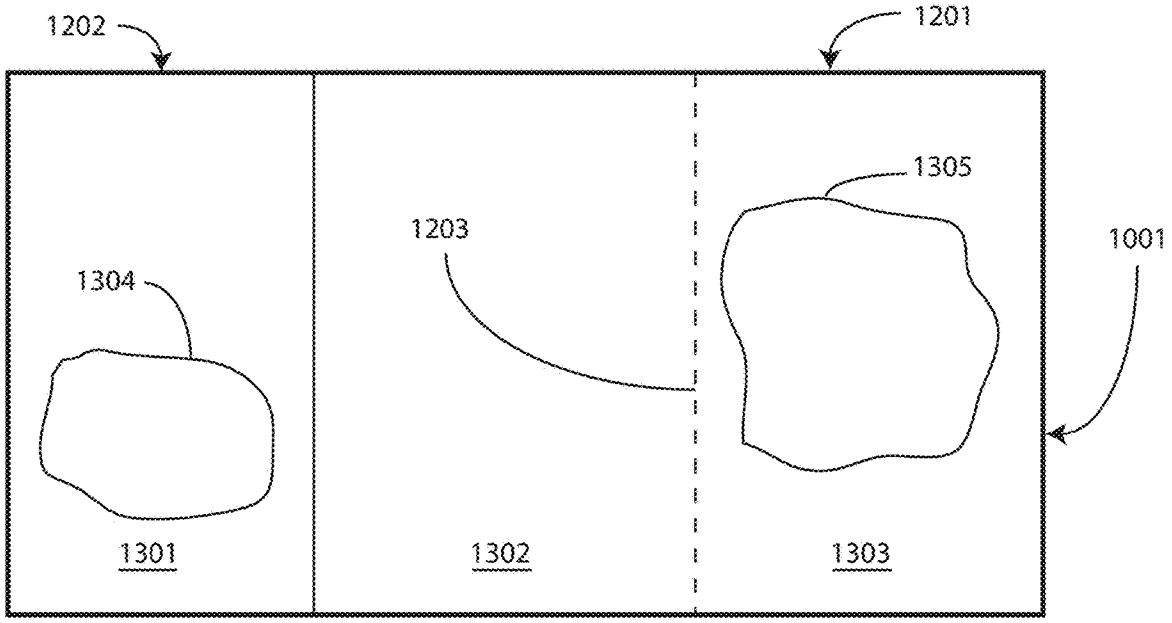
1202
1201
1305
1203
1001
1304
1301
1302
1303

FIG. 13

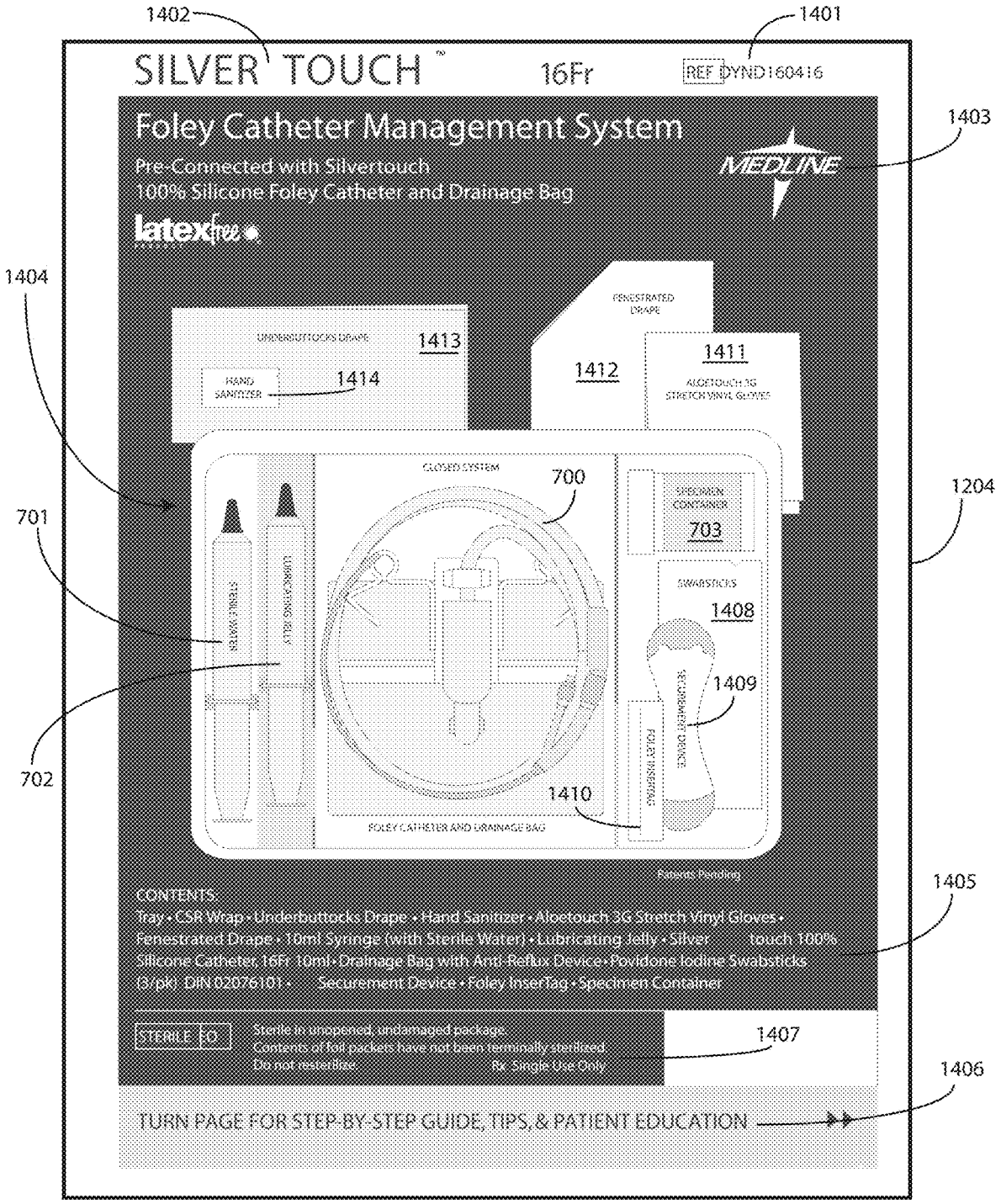
1402
1401
SILVER TOUCH™
16Fr
REF DYND160416
Foley Catheter Management System
Pre-Connected with Silvertouch
100% Silicone Foley Catheter and Drainage Bag
latexfree
MEDLINE
1403
1404
FENESTRATED DRAPE
UNDERBUTTOCKS DRAPE
1413
HAND SANITIZER
1414
1412
1411
ALOETOUCH 3G STRETCH VINYL GLOVES
CLOSED SYSTEM
700
SPECIMEN CONTAINER
703
1204
701
STERILE WATER
LUBRICATING JELLY
SWABSTICKS
1408
1409
SECUREMENT DEVICE
FOLEY INSERTTAG
702
1410
FOLEY CATHETER AND DRAINAGE BAG
Patents Pending
CONTENTS:
Tray • CSR Wrap • Underbuttocks Drape • Hand Sanitizer • Aloetouch 3G Stretch Vinyl Gloves • Fenestrated Drape • 10ml Syringe (with Sterile Water) • Lubricating Jelly • Silver touch 100% Silicone Catheter, 16Fr 10ml • Drainage Bag with Anti-Reflux Device • Povidone Iodine Swabsticks (3/pk) DIN 02076101 • Securement Device • Foley InserTag • Specimen Container
1405
STERILE EO
Sterile in unopened, undamaged package.
Contents of foil packets have not been terminally sterilized.
Do not resterilize.
Rx Single Use Only
1407
1406
TURN PAGE FOR STEP-BY-STEP GUIDE, TIPS, & PATIENT EDUCATION

FIG. 14

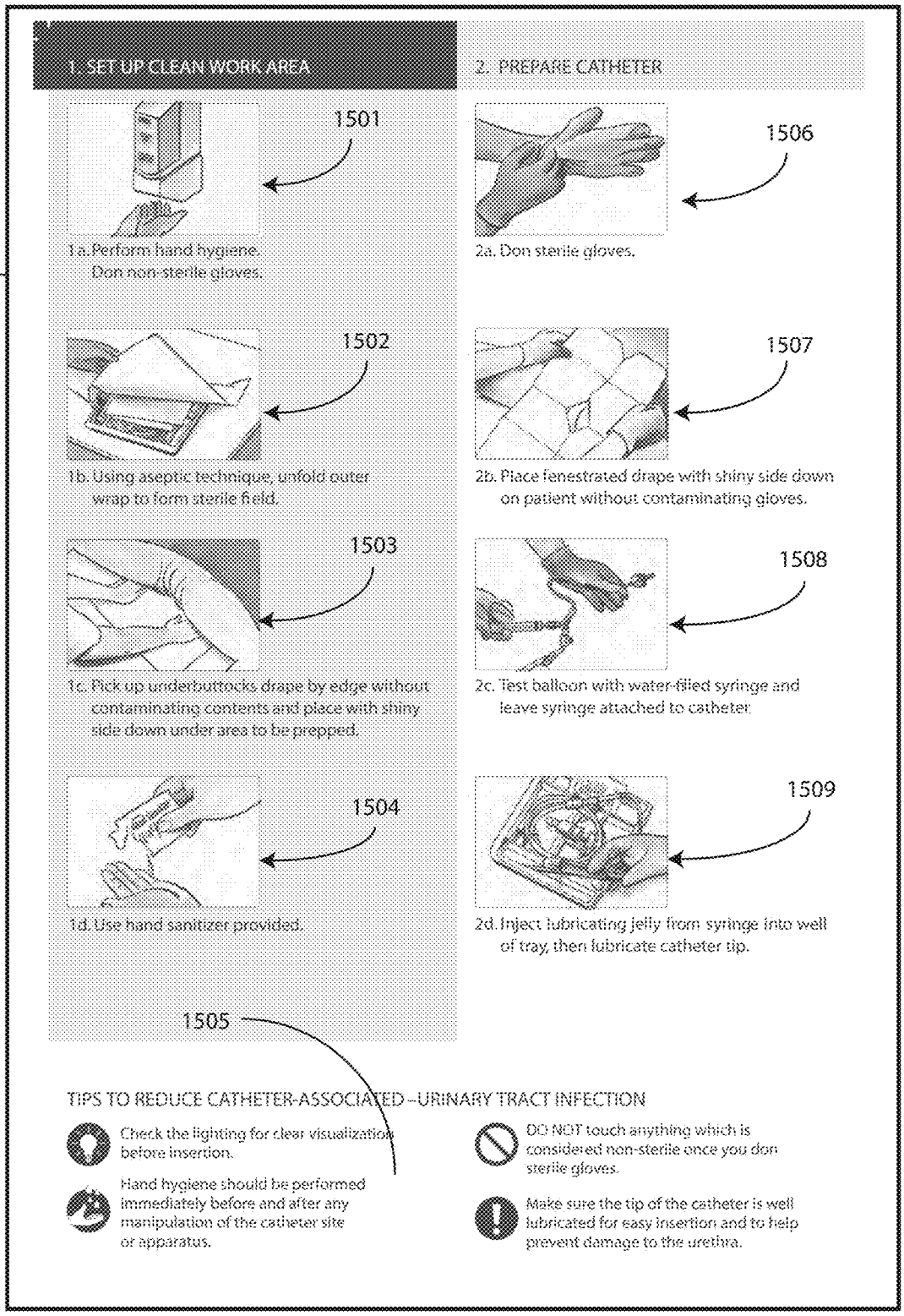
1301
1. SET UP CLEAN WORK AREA
2. PREPARE CATHETER
1501
1a. Perform hand hygiene. Don non-sterile gloves.
1502
1b. Using aseptic technique, unfold outer wrap to form sterile field.
1503
1c. Pick up underbuttocks drape by edge without contaminating contents and place with shiny side down under area to be prepped.
1504
1d. Use hand sanitizer provided.
1506
2a. Don sterile gloves.
1507
2b. Place fenestrated drape with shiny side down on patient without contaminating gloves.
1508
2c. Test balloon with water-filled syringe and leave syringe attached to catheter.
1509
2d. Inject lubricating jelly from syringe into well of tray, then lubricate catheter tip.
1505
TIPS TO REDUCE CATHETER-ASSOCIATED–URINARY TRACT INFECTION
Check the lighting for clear visualization before insertion.
Hand hygiene should be performed immediately before and after any manipulation of the catheter site or apparatus.
DO NOT touch anything which is considered non-sterile once you don sterile gloves.
Make sure the tip of the catheter is well lubricated for easy insertion and to help prevent damage to the uretira.

FIG. 15

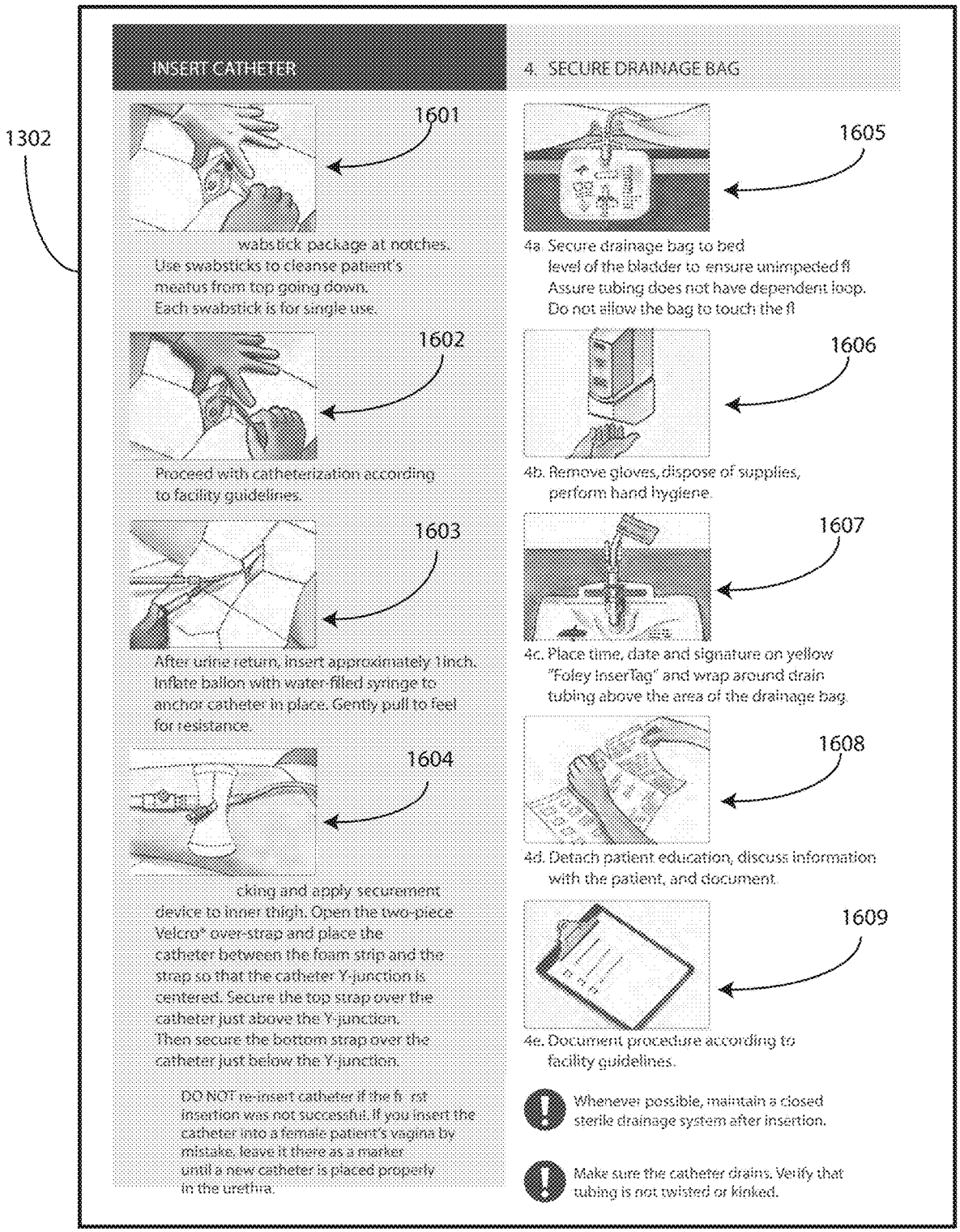
1302
INSERT CATHETER
1601
wabstick package at notches.
Use swabsticks to cleanse patient's meatus from top going down.
Each swabstick is for single use.
1602
Proceed with catheterization according to facility guidelines.
1603
After urine return, insert approximately 1inch. Inflate ballon with water-filled syringe to anchor catheter in place. Gently pull to feel for resistance.
1604
cking and apply securement device to inner thigh. Open the two-piece Velcro* over-strap and place the catheter between the foam strip and the strap so that the catheter Y-junction is centered. Secure the top strap over the catheter just above the Y-junction. Then secure the bottom strap over the catheter just below the Y-junction.
DO NOT re-insert catheter if the fi rst insertion was not successful. If you insert the catheter into a female patient's vagina by mistake, leave it there as a marker until a new catheter is placed properly in the urethra.
4. SECURE DRAINAGE BAG
1605
4a. Secure drainage bag to bed level of the bladder to ensure unimpeded fl Assure tubing does not have dependent loop. Do not allow the bag to touch the fl
1606
4b. Remove gloves, dispose of supplies, perform hand hygiene.
1607
4c. Place time, date and signature on yellow "Foley InserTag" and wrap around drain tubing above the area of the drainage bag
1608
4d. Detach patient education, discuss information with the patient, and document.
1609
4e. Document procedure according to facility guidelines.
Whenever possible, maintain a closed sterile drainage system after insertion.
Make sure the catheter drains. Verify that tubing is not twisted or kinked.

FIG. 16

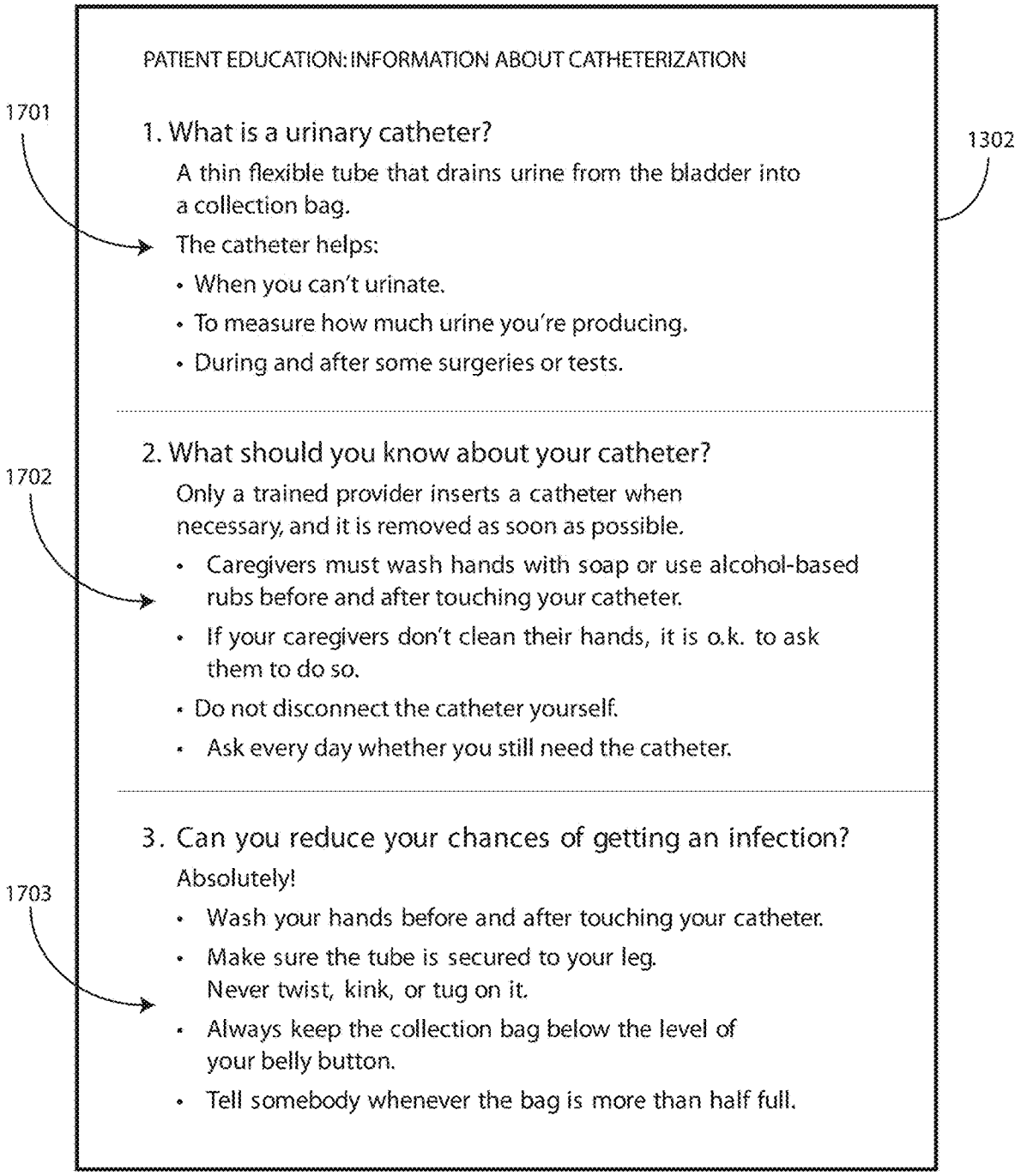
PATIENT EDUCATION: INFORMATION ABOUT CATHETERIZATION
1701
1302
1. What is a urinary catheter?
A thin flexible tube that drains urine from the bladder into a collection bag.
The catheter helps:
• When you can't urinate.
• To measure how much urine you're producing.
• During and after some surgeries or tests.
1702
2. What should you know about your catheter?
Only a trained provider inserts a catheter when necessary, and it is removed as soon as possible.
• Caregivers must wash hands with soap or use alcohol-based rubs before and after touching your catheter.
• If your caregivers don't clean their hands, it is o.k. to ask them to do so.
• Do not disconnect the catheter yourself.
• Ask every day whether you still need the catheter.
1703
3. Can you reduce your chances of getting an infection?
Absolutely!
• Wash your hands before and after touching your catheter.
• Make sure the tube is secured to your leg. Never twist, kink, or tug on it.
• Always keep the collection bag below the level of your belly button.
• Tell somebody whenever the bag is more than half full.

FIG. 17

PATIENT EDUCATION: INFORMATION ABOUT CATHETERIZATION

1206

4. What is a 'catheter-associated' urinary tract infection (UTI)?

Some helpful germs live in our urinary tract. But if a catheter introduces 'outside' germs, they can cause an infection. That's why hands must be washed before handling your catheter. It's also why catheters must be removed as soon as possible.

1801

5. What are some symptoms if you have a urinary tract infection (UTI)?

- Sudden fever and/or bloody urine.
- Burning or painful urination, or pain below the stomach.
- Frequent, or more urgent, urinating after catheter is removed.

Tell your physician/provider right away, because an antibiotic may be needed.

1802

6. What about when you're going home?

- If you'll be using a catheter, make sure your health care provider fully explains how to care for it.
- Be sure to find out who to contact if you have questions after you get home.

1803

My physician's/provider's information:

_____

Phone Number: _____

1804

Adapted from: Centers for Disease Control and Prevention. FAQs about "Catheter-Associated Urinary Tract Infection." Available at: http://www.cdc.gov/ncidod/dhqp/pdf/guidelines/CA-UTI_tagged.pdf. Accessed March 25, 2009.

©2009 Medline Industries, Inc., Silvertouch and Albetouch are trademarks of Medline Industries, Inc. Assembled in USA by Medline Industries, Inc., Mundelein, IL 60060-4486 USA. Distributed in Canada by Medline Canada Corp., Oakville, Ontario L2L6R2. www.medline.com 1-800-MEDLINE DYND160416 RG09/DYN 80759U

FIG. 18

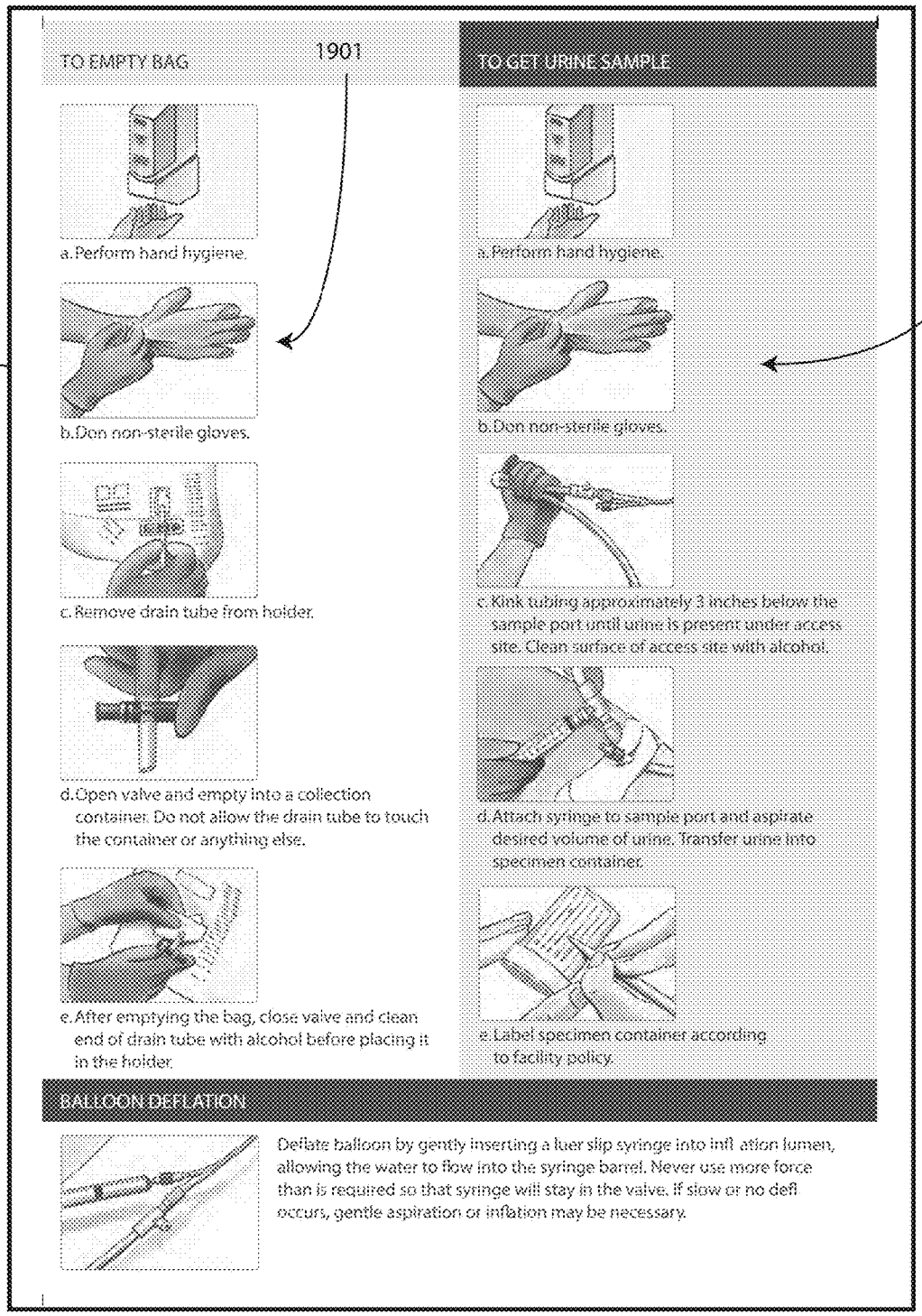
TO EMPTY BAG
1901
1205
a. Perform hand hygiene.
b. Don non-sterile gloves.
c. Remove drain tube from holder.
d. Open valve and empty into a collection container. Do not allow the drain tube to touch the container or anything else.
e. After emptying the bag, close valve and clean end of drain tube with alcohol before placing it in the holder.
TO GET URINE SAMPLE
1902
a. Perform hand hygiene.
b. Don non-sterile gloves.
c. Kink tubing approximately 3 inches below the sample port until urine is present under access site. Clean surface of access site with alcohol.
d. Attach syringe to sample port and aspirate desired volume of urine. Transfer urine into specimen container.
e. Label specimen container according to facility policy.
BALLOON DEFLATION
Deflate balloon by gently inserting a luer slip syringe into infl ation lumen, allowing the water to flow into the syringe barrel. Never use more force than is required so that syringe will stay in the valve. If slow or no defl occurs, gentle aspiration or inflation may be necessary.

FIG. 19

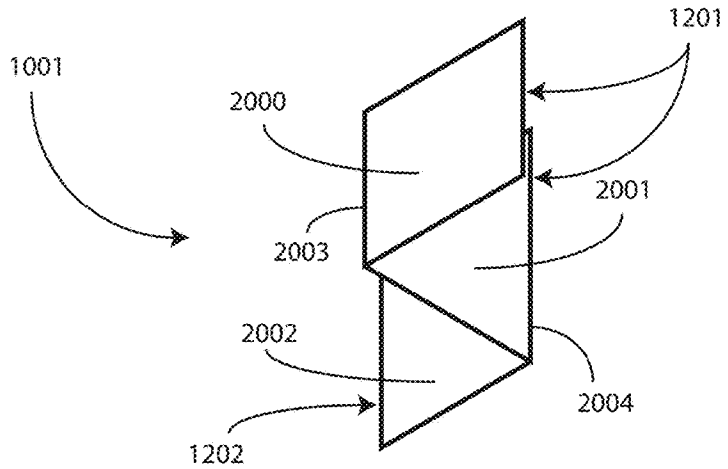
1001
2000
1201
2001
2003
2002
2004
1202

FIG. 20

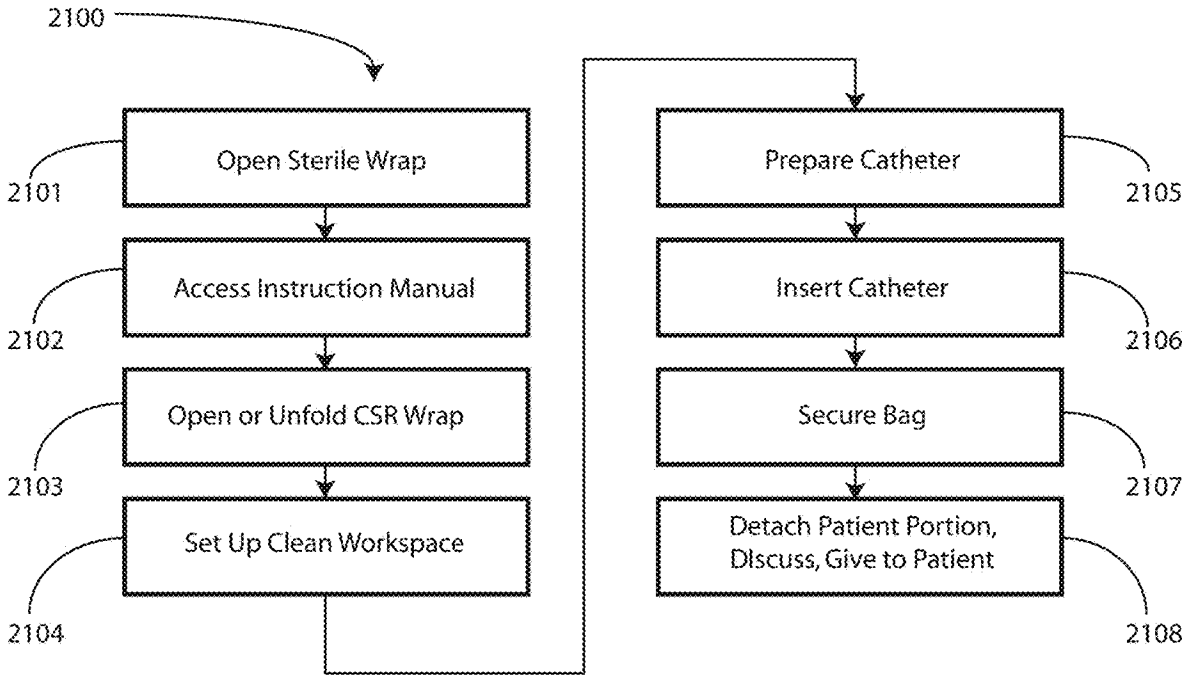
2100
Open Sterile Wrap
2101
Access Instruction Manual
2102
Open or Unfold CSR Wrap
2103
Set Up Clean Workspace
2104
Prepare Catheter
2105
Insert Catheter
2106
Secure Bag
2107
Detach Patient Portion, DIscuss, Give to Patient
2108

FIG. 21

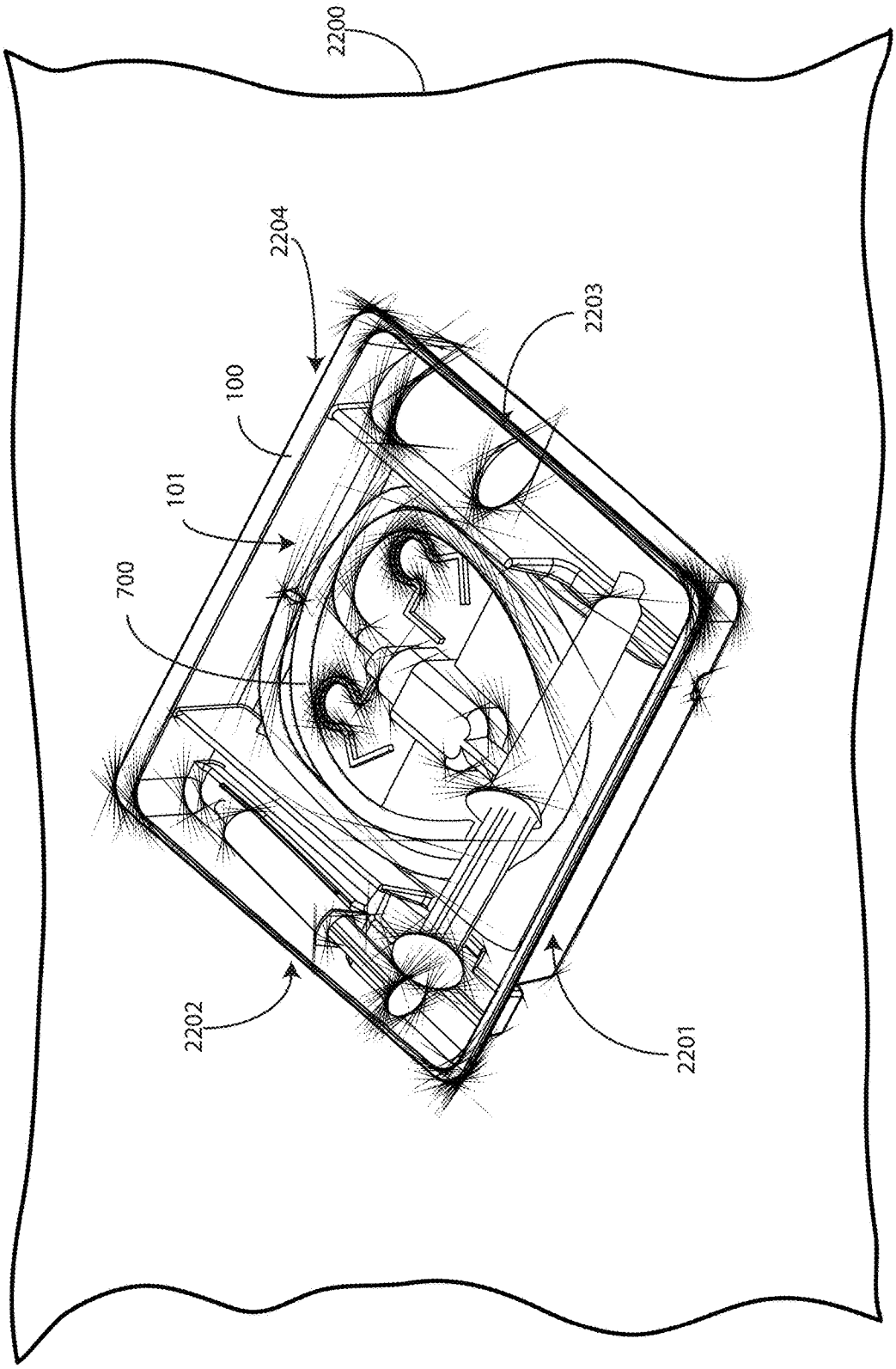

FIG. 22

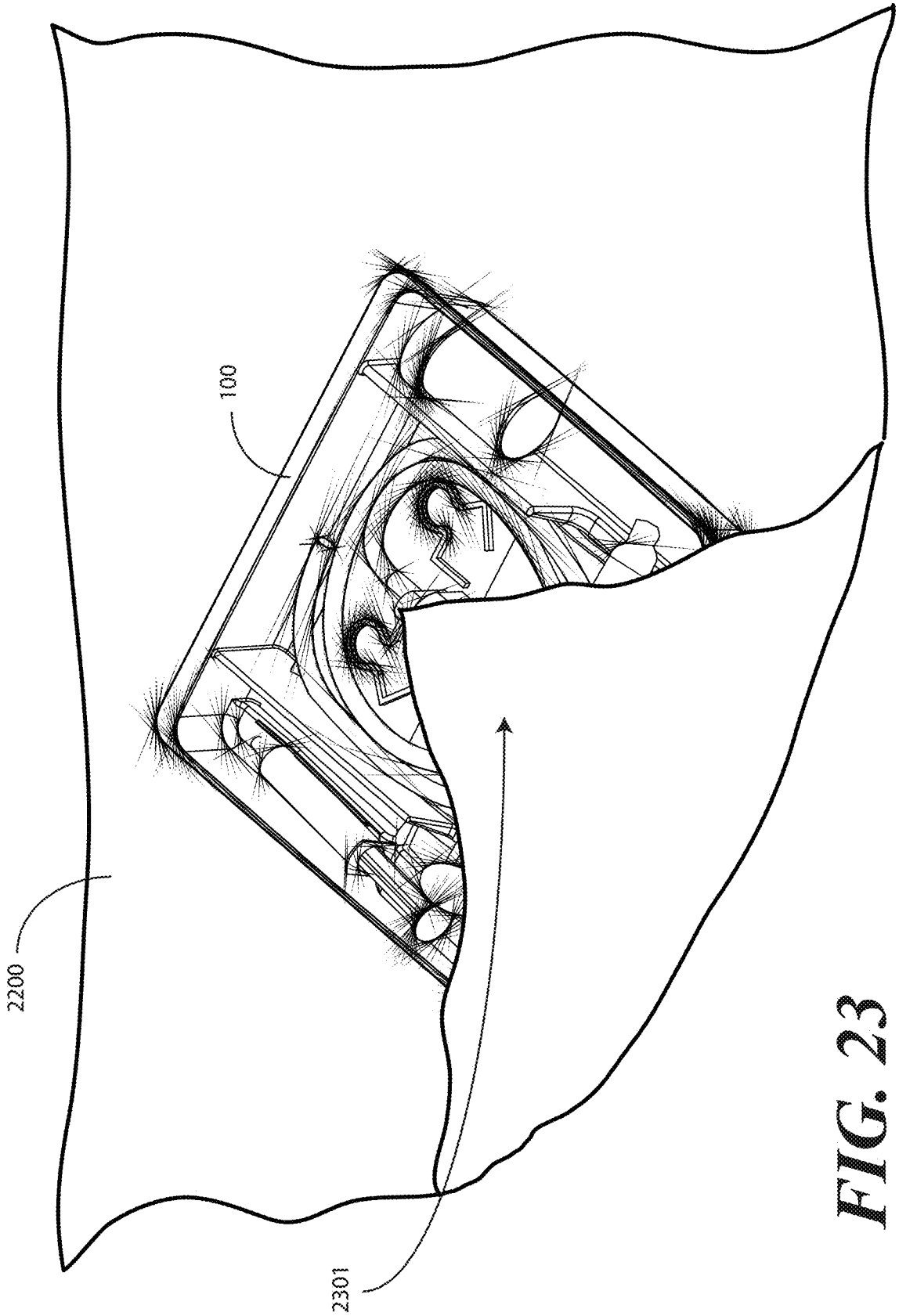

FIG. 23

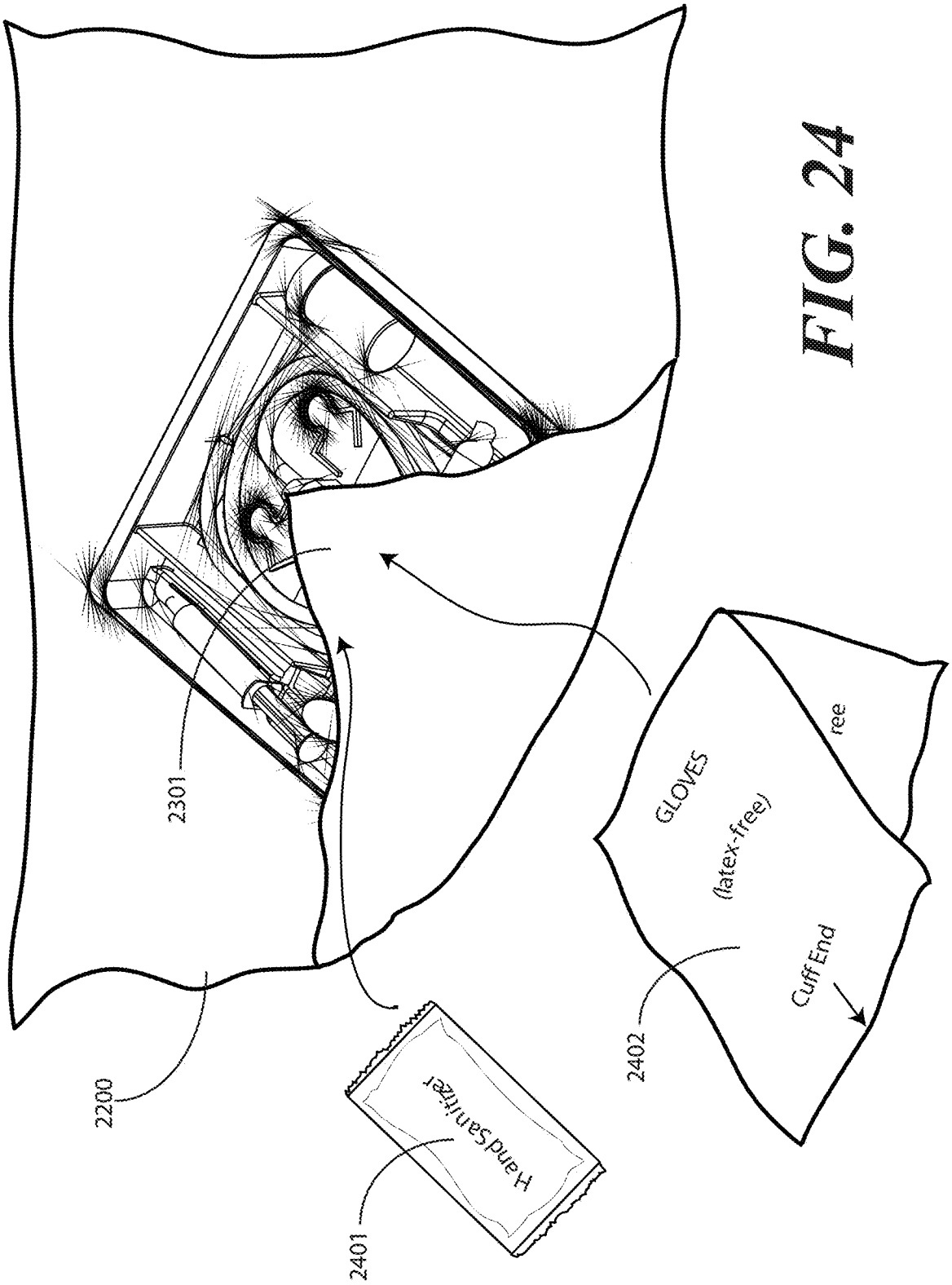
2200
2301
2401
HandSanitizer
2402
GLOVES
(latex-free)
Cuff End
ree

FIG. 24

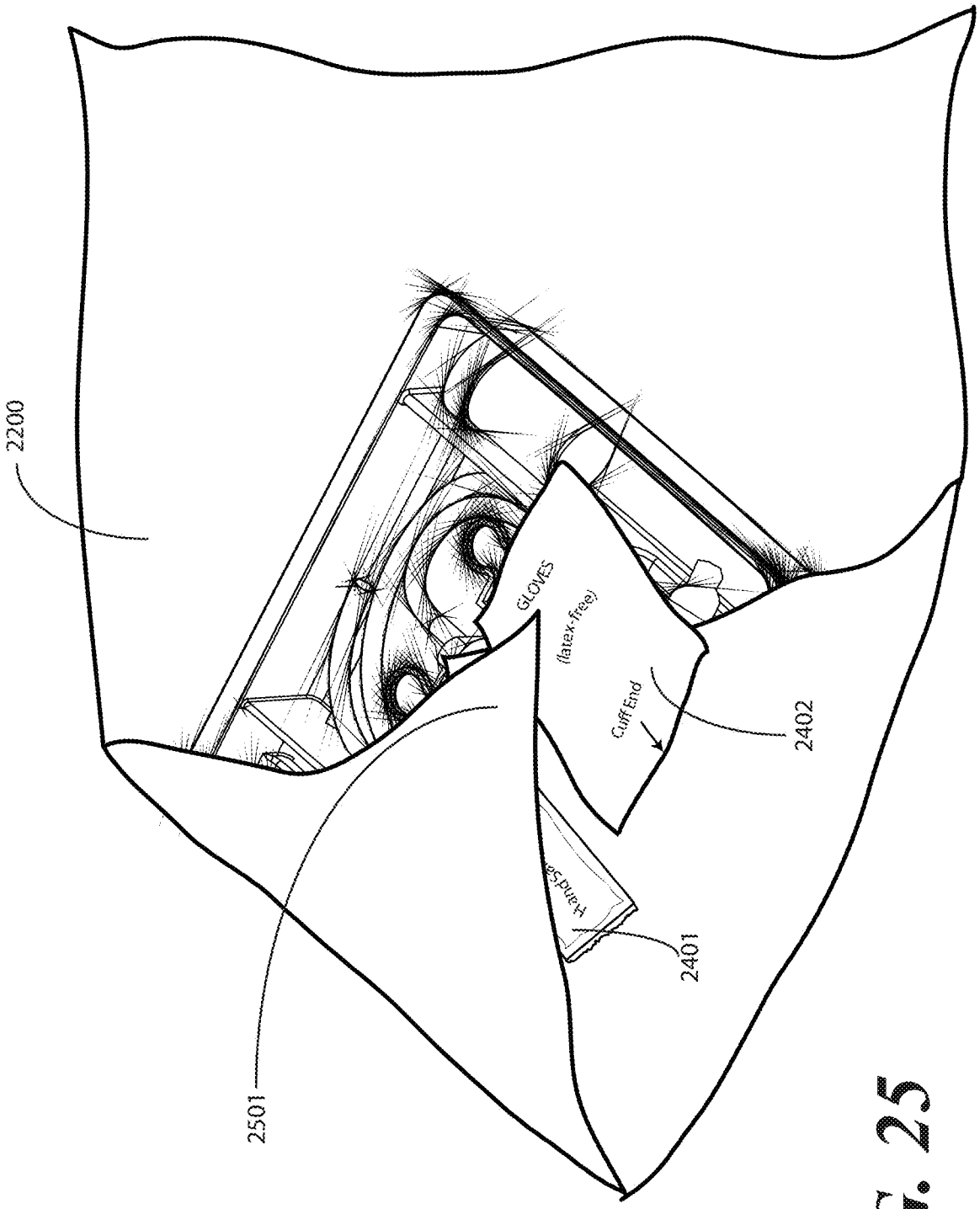

FIG. 25

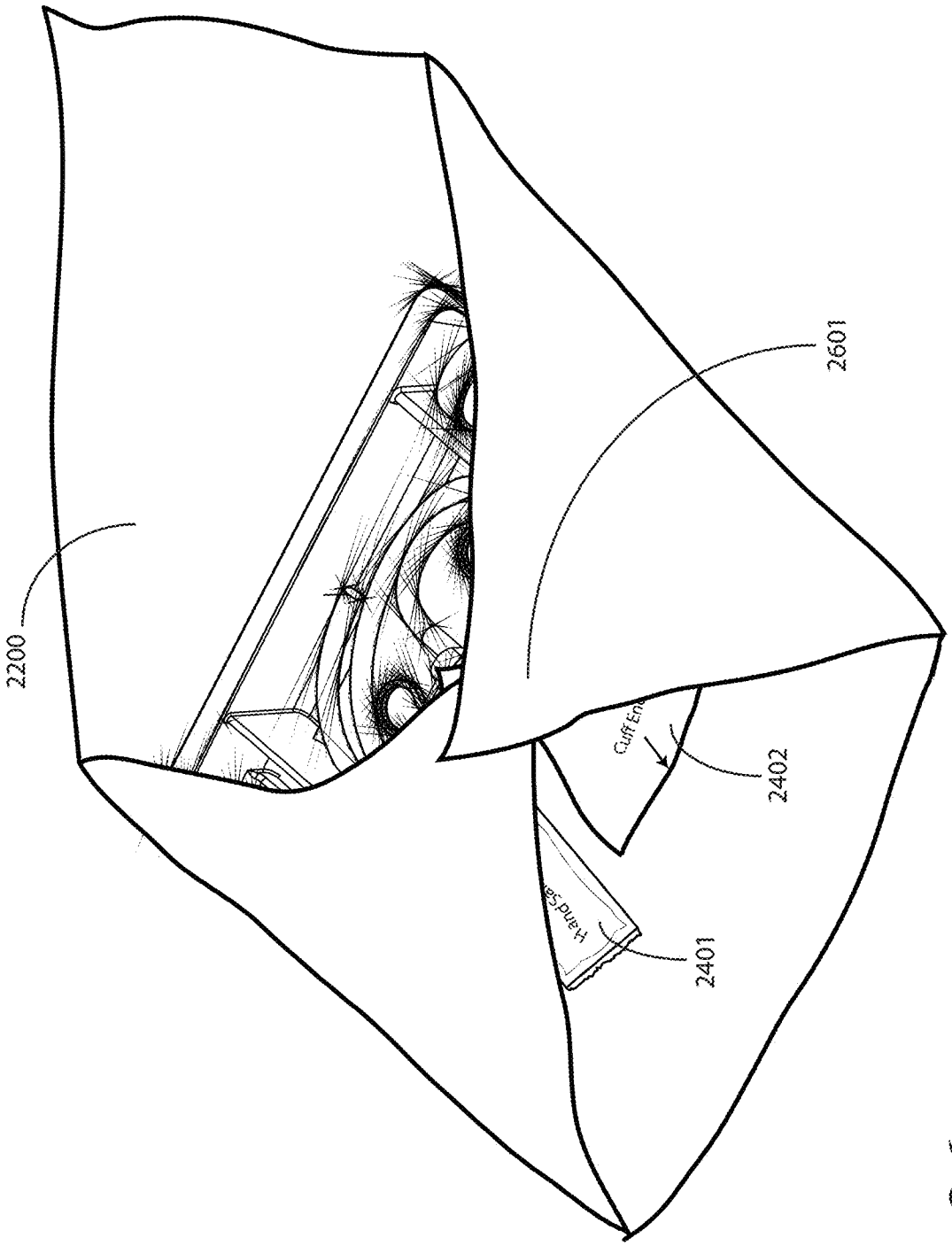

FIG. 26

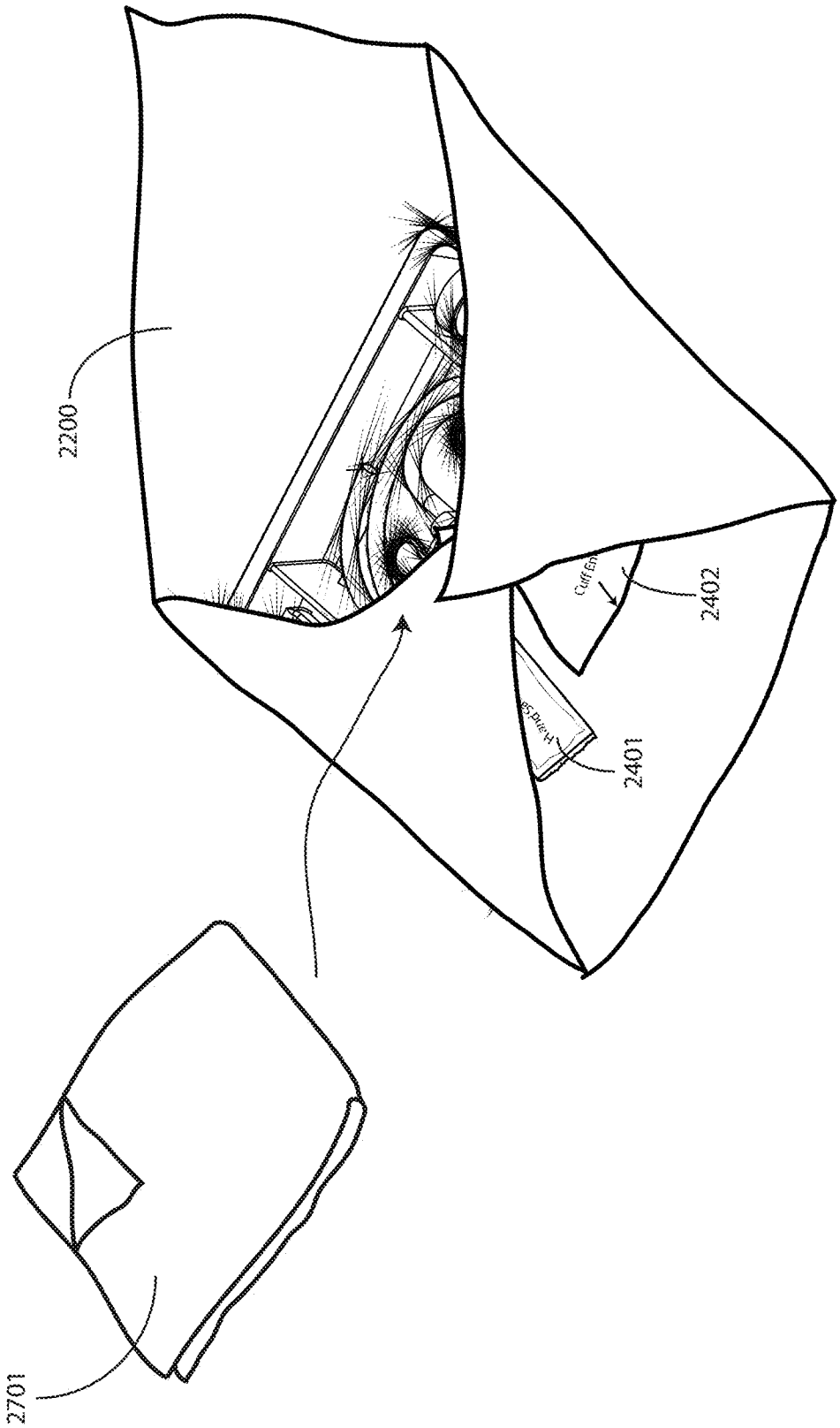

FIG. 27

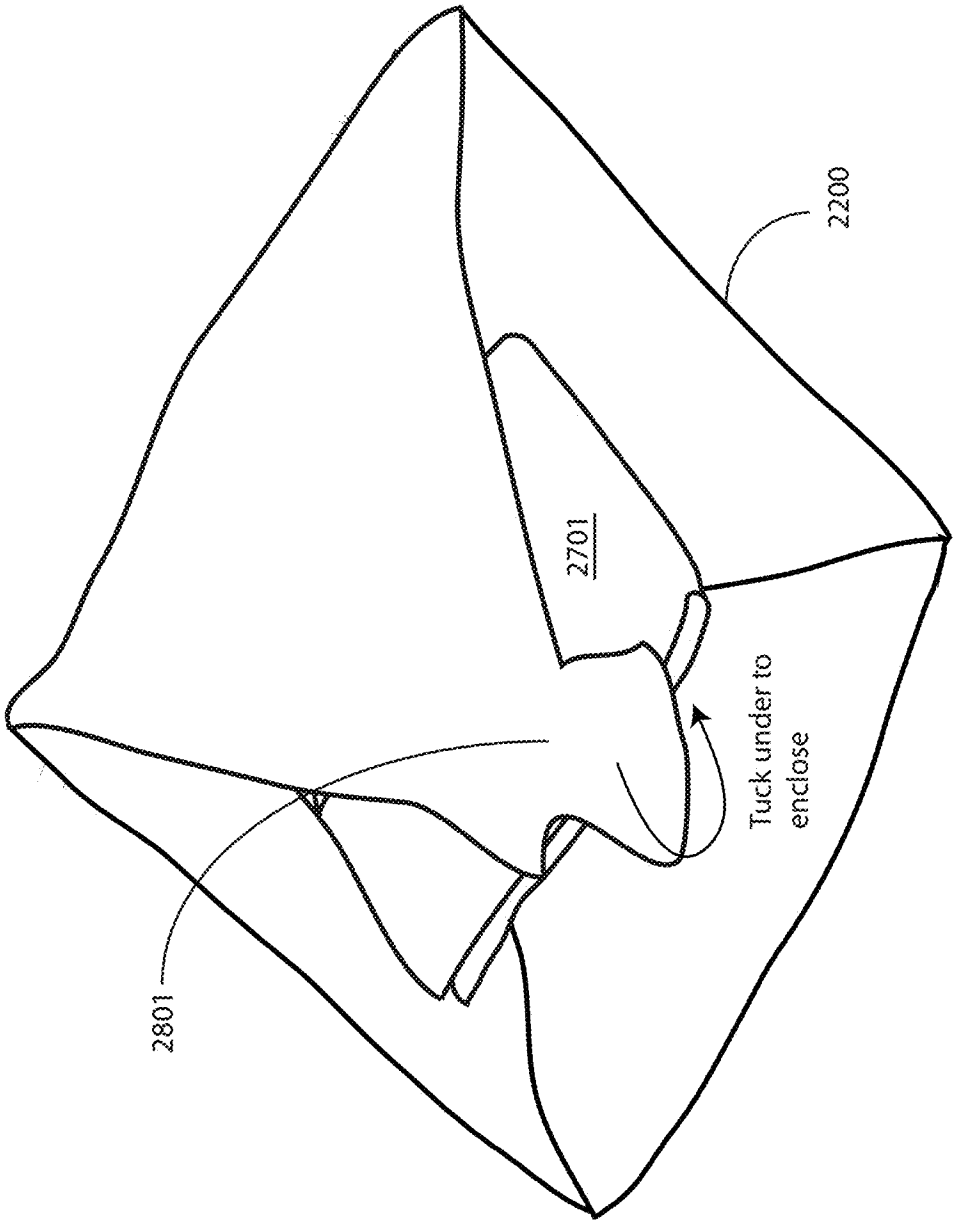

FIG. 28

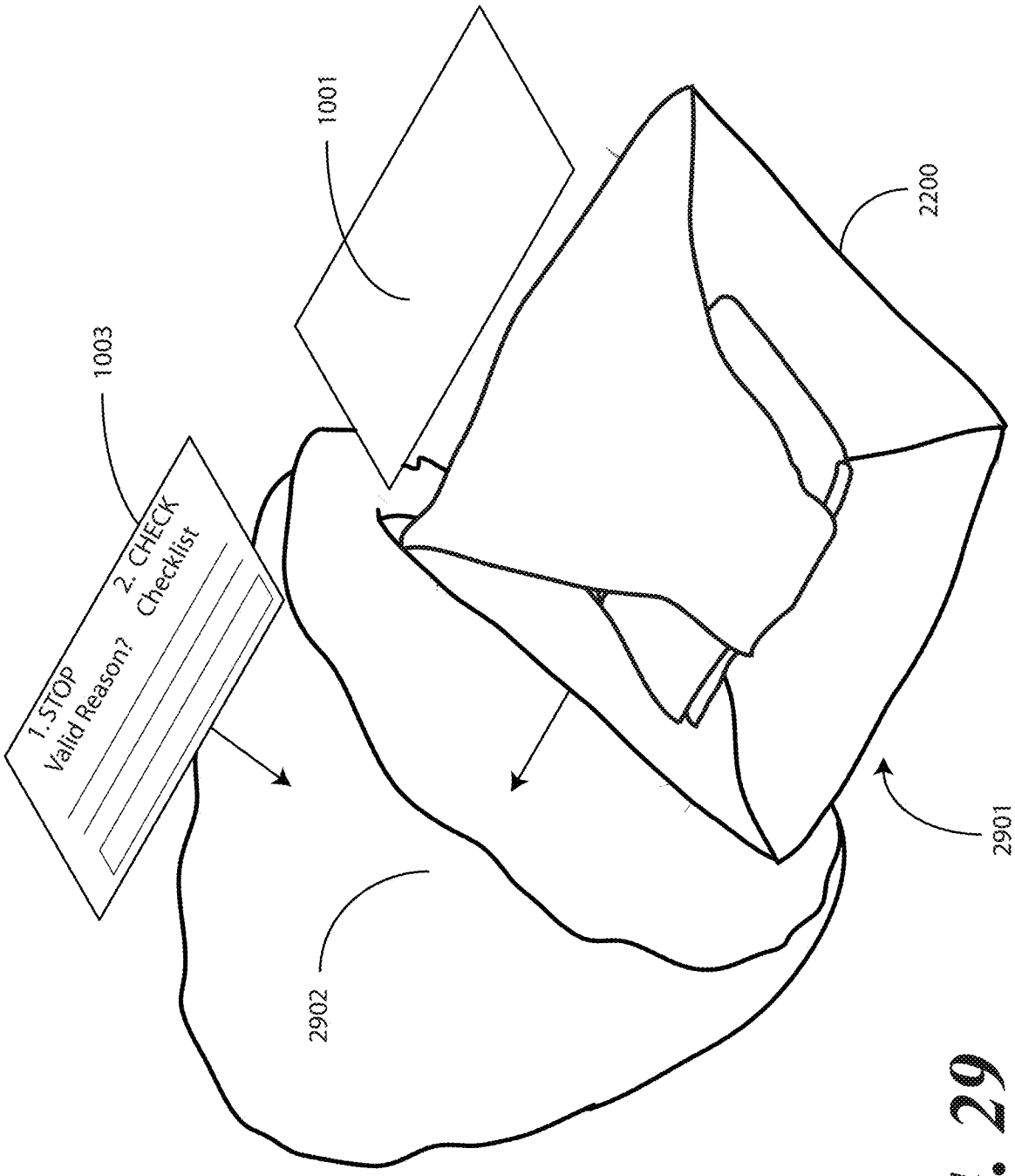
1003
1. STOP
Valid Reason?
2. CHECK
Checklist
1001
2902
2200
2901

FIG. 29

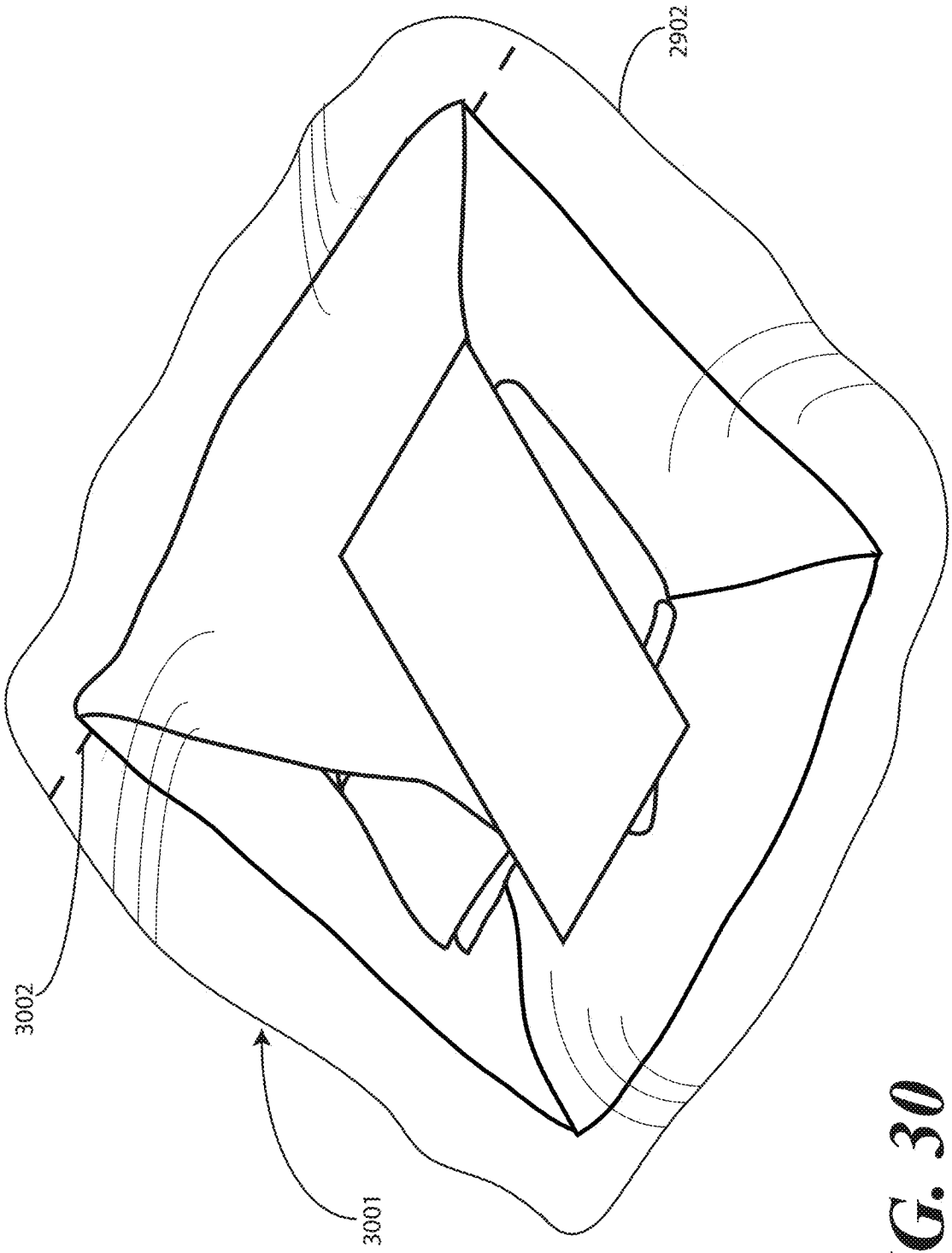

FIG. 30

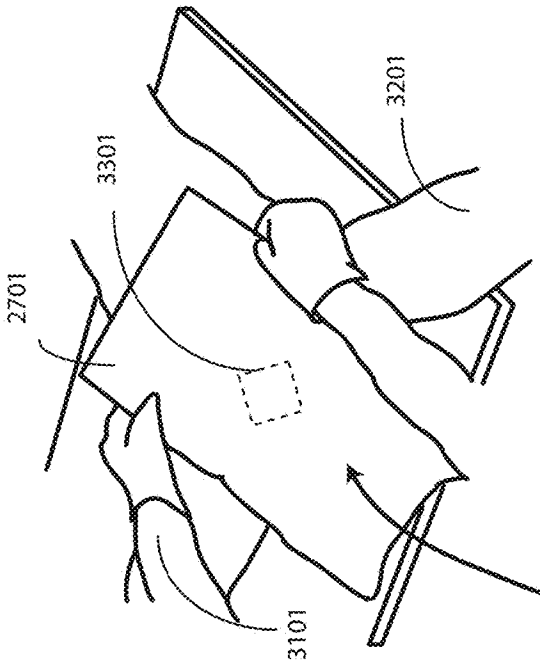

FIG. 33

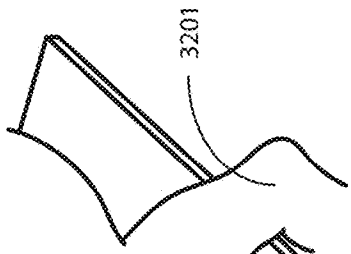

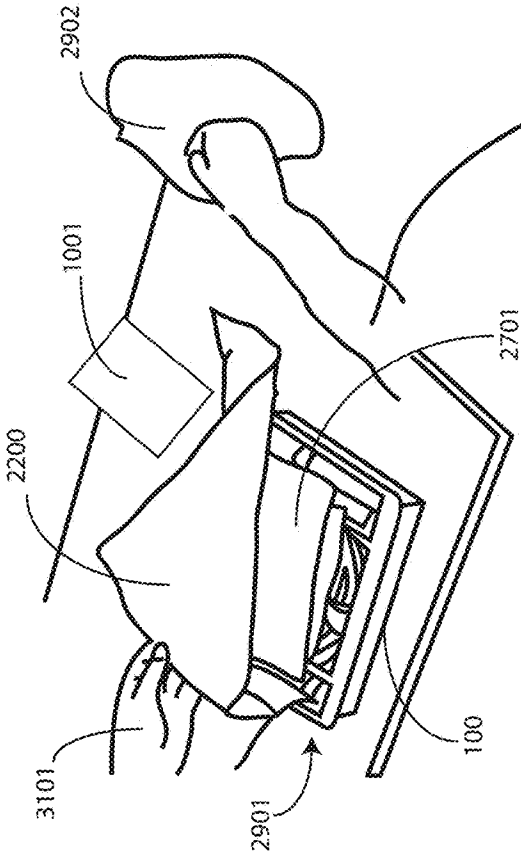

FIG. 31

FIG. 32

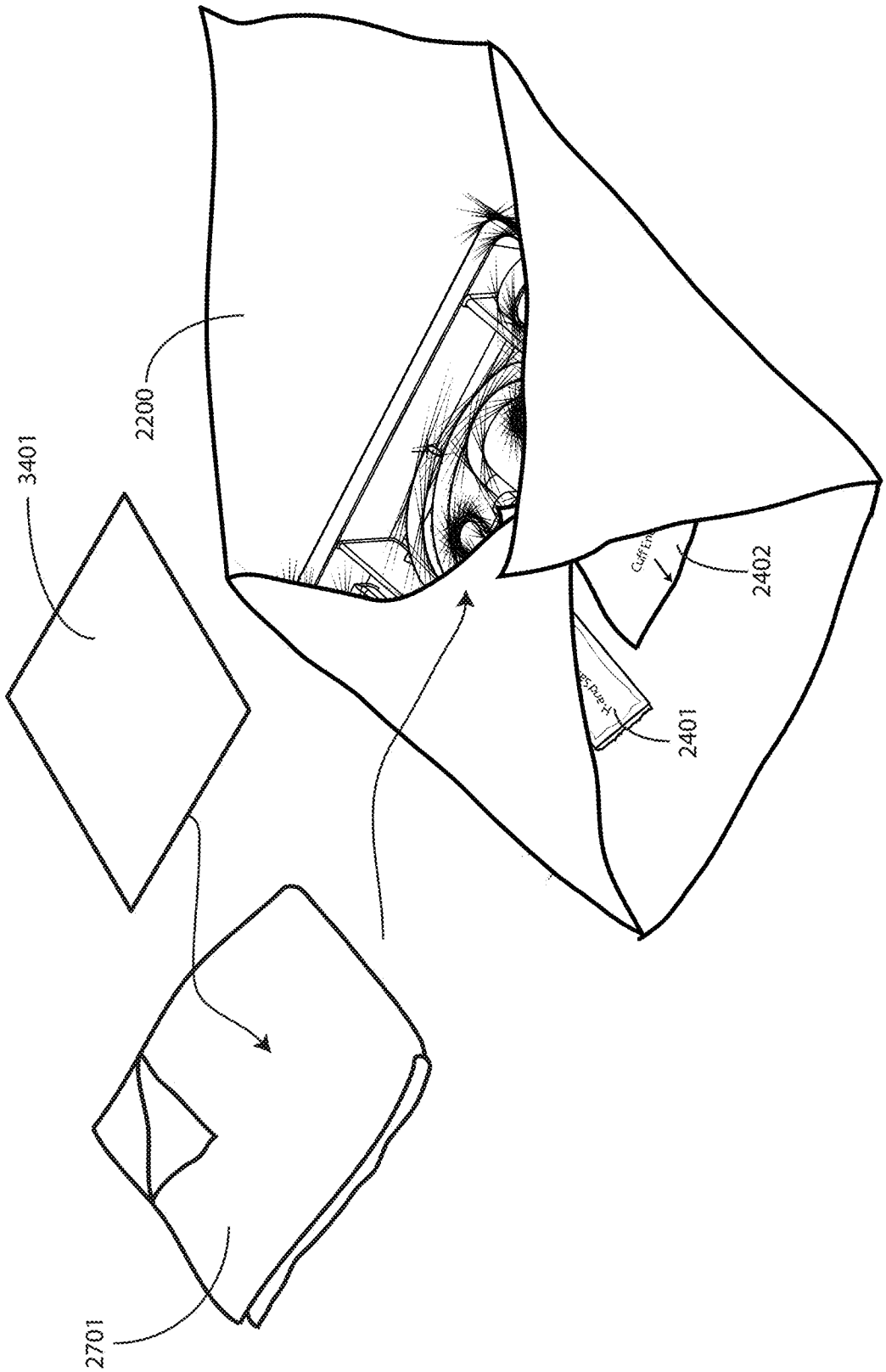

FIG. 34

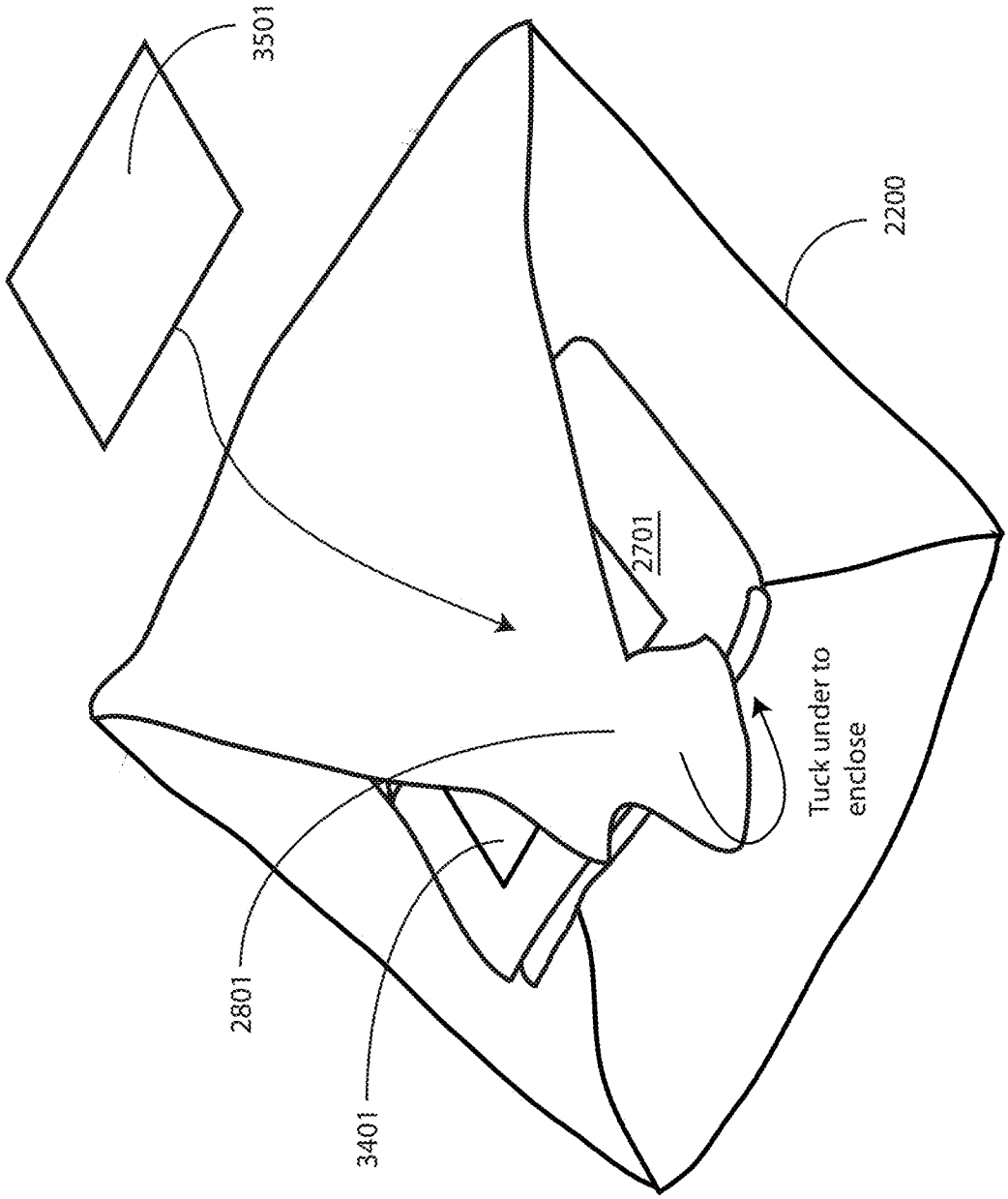

FIG. 35

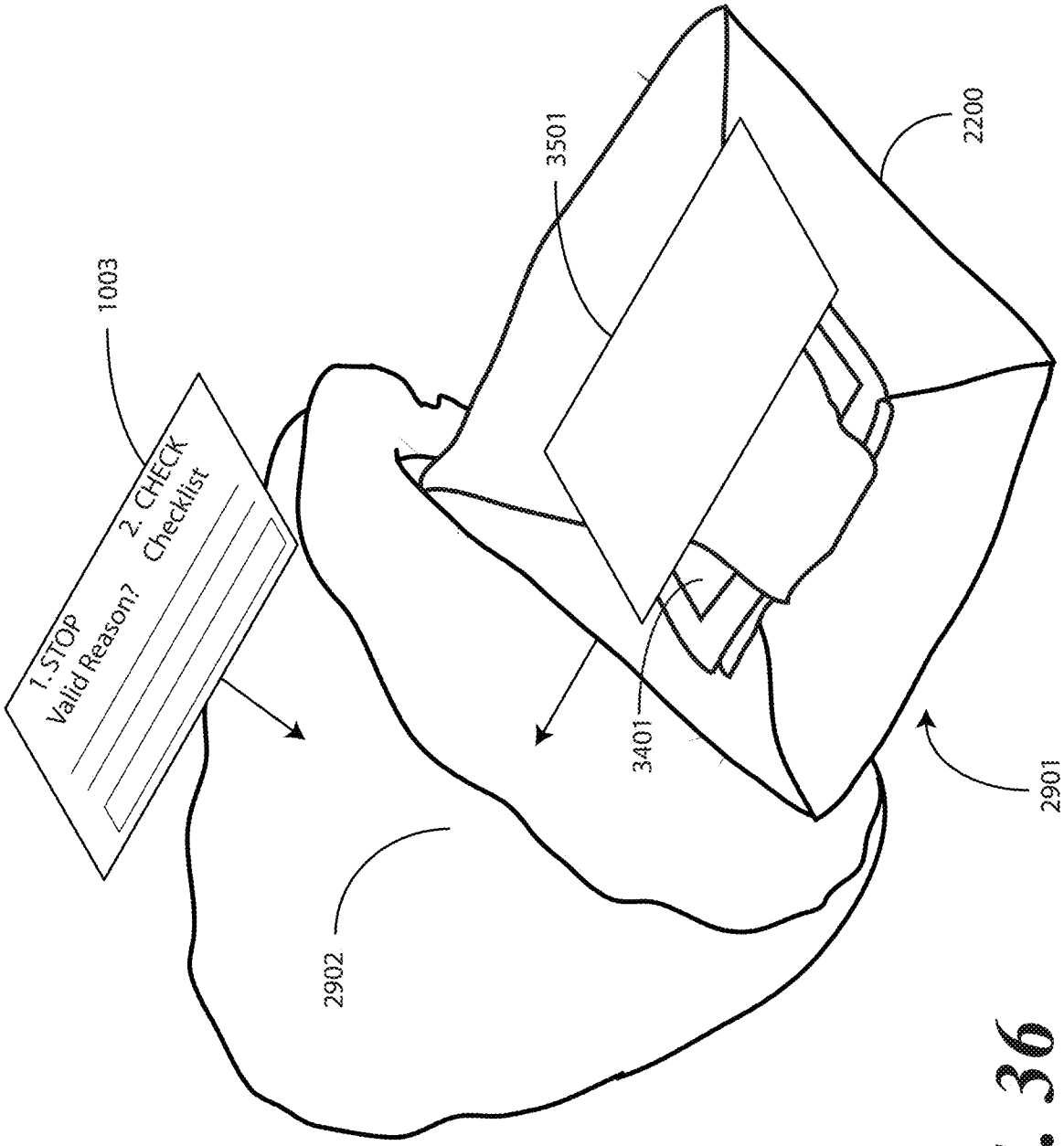
1. STOP
Valid Reason?
2. CHECK
Checklist
1003
2902
3401
3501
2200
2901

FIG. 36

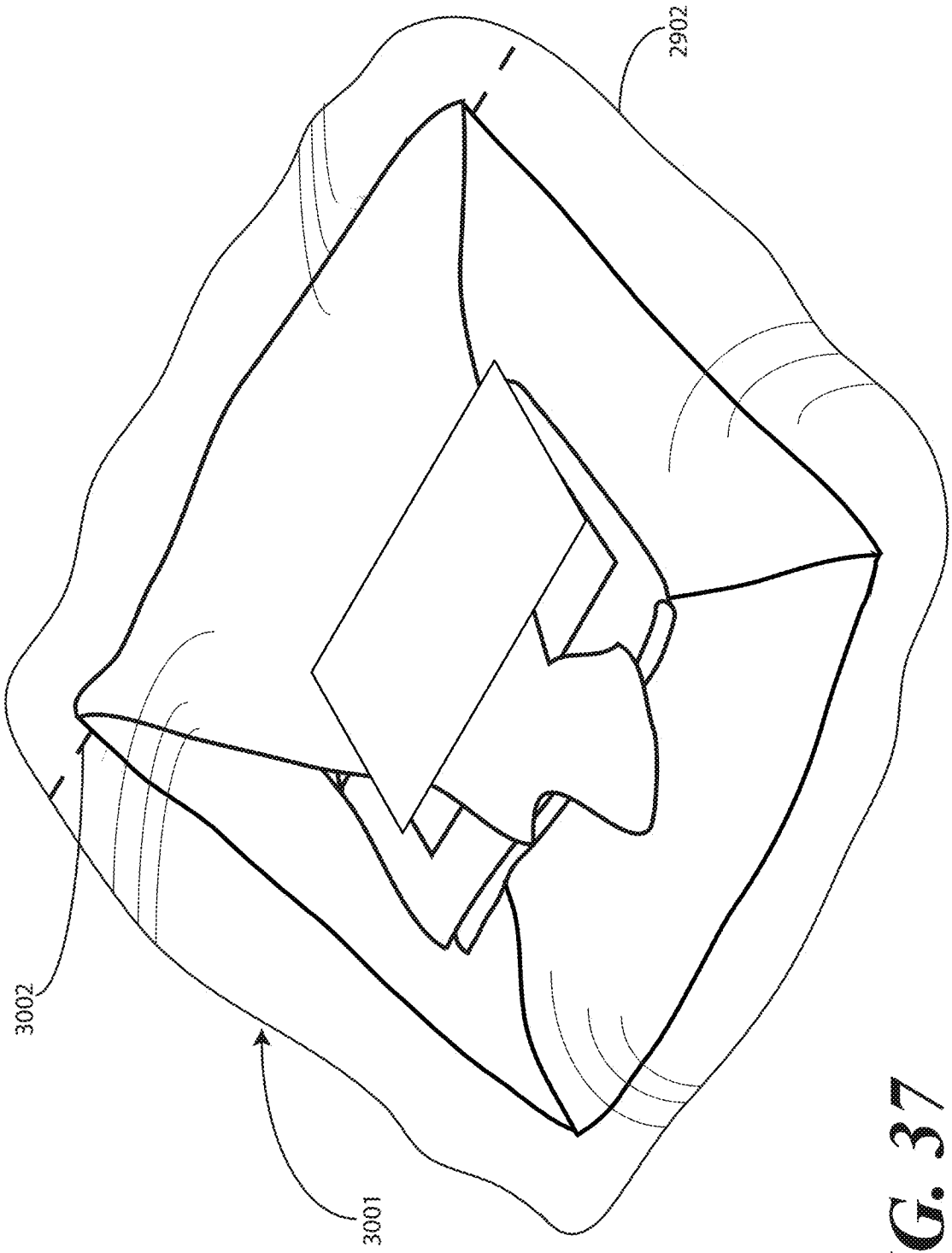

FIG. 37

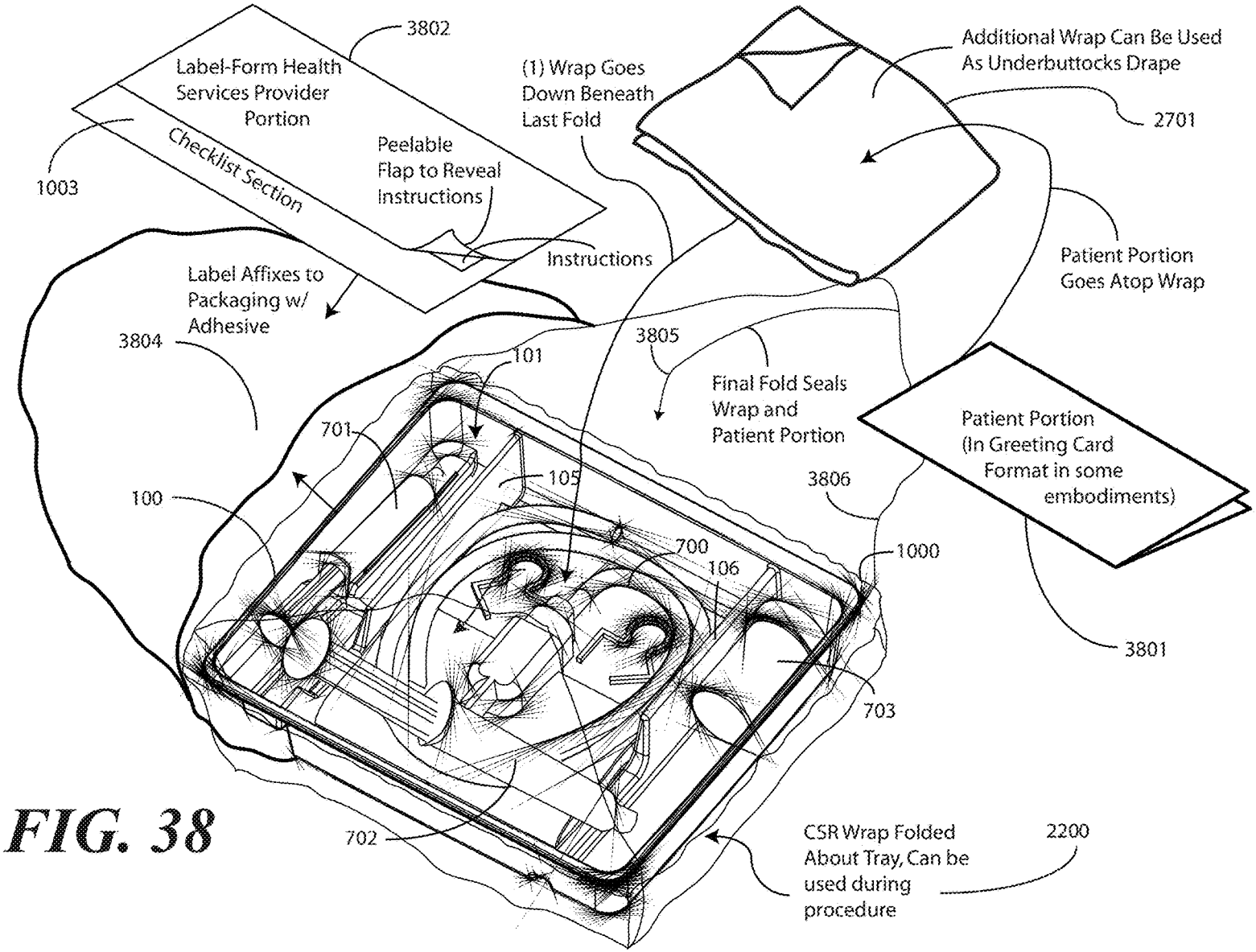
3802
Label-Form Health Services Provider Portion
Checklist Section
1003
Peelable Flap to Reveal Instructions
Instructions
(1) Wrap Goes Down Beneath Last Fold
Additional Wrap Can Be Used As Underbuttocks Drape
2701
Patient Portion Goes Atop Wrap
Label Affixes to Packaging w/ Adhesive
3804
3805
Final Fold Seals Wrap and Patient Portion
101
701
105
100
3806
Patient Portion (In Greeting Card Format in some embodiments)
700
106
1000
3801
703
702
CSR Wrap Folded About Tray, Can be used during procedure
2200

FIG. 38

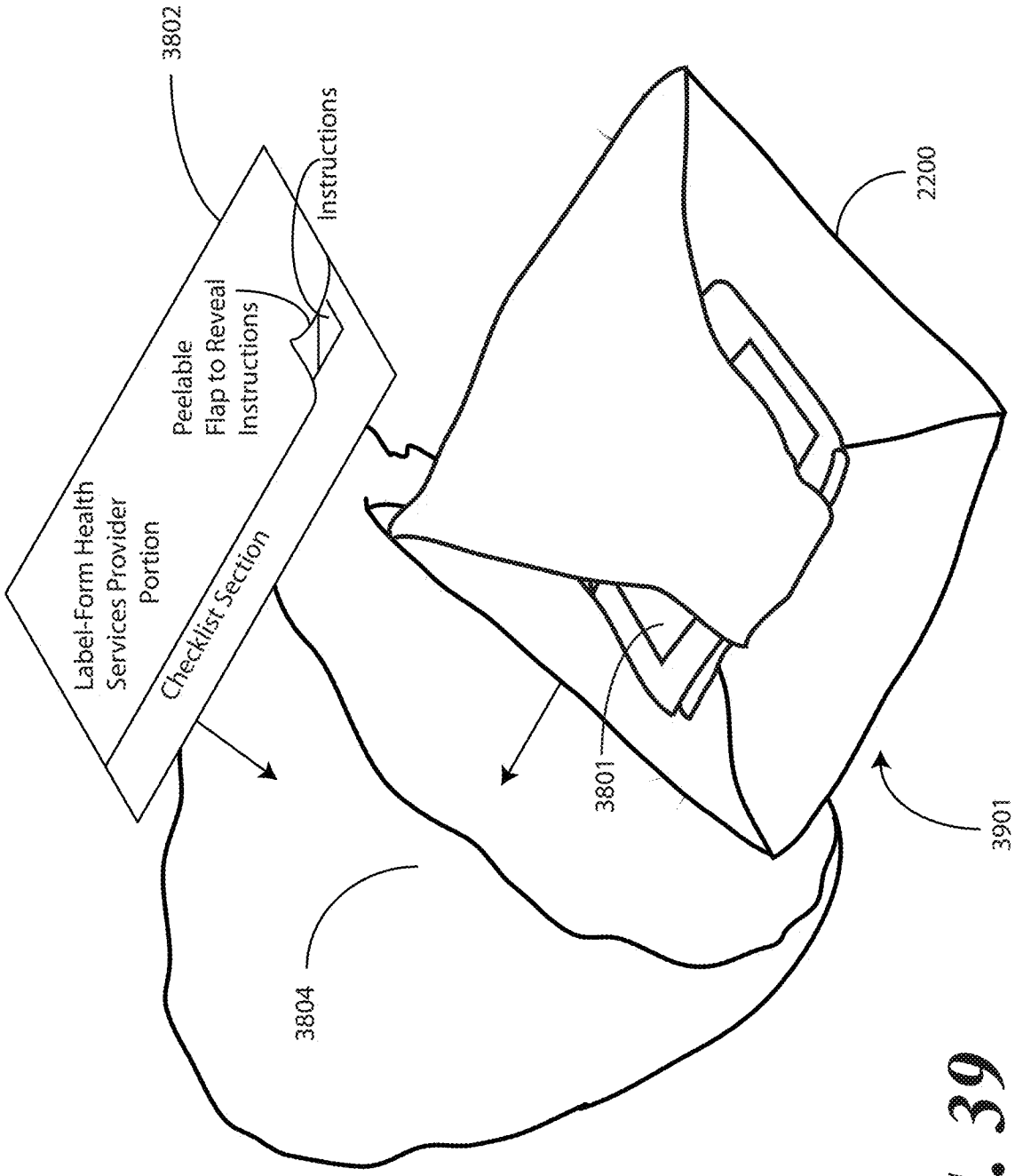
3802
Instructions
Peelable
Flap to Reveal
Instructions
Label-Form Health
Services Provider
Portion
Checklist Section
2200
3801
3901
3804

FIG. 39

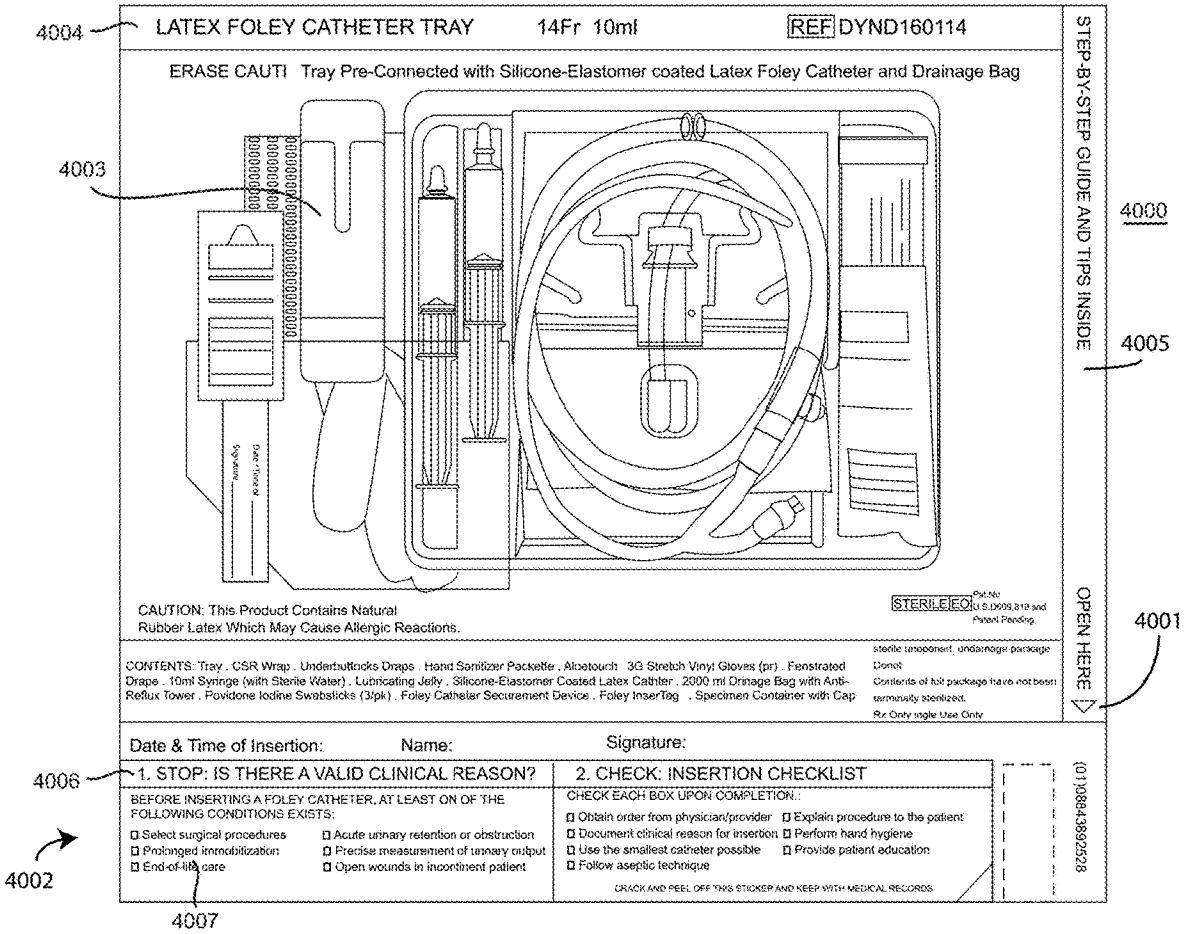
4004
LATEX FOLEY CATHETER TRAY
14Fr 10ml
REF DYND160114
ERASE CAUTI Tray Pre-Connected with Silicone-Elastomer coated Latex Foley Catheter and Drainage Bag
4003
STEP-BY-STEP GUIDE AND TIPS INSIDE
4000
4005
CAUTION: This Product Contains Natural Rubber Latex Which May Cause Allergic Reactions.
STERILE EO
OPEN HERE
4001
CONTENTS: Tray . CSR Wrap . Underbuttocks Drape . Hand Sanitizer Packette . Alcetouch 3G Stretch Vinyl Gloves (pr) . Fenestrated Drape . 10ml Syringe (with Sterile Water) . Lubricating Jelly . Silicone-Elastomer Coated Latex Catheter . 2000 ml Drinage Bag with Anti-Reflux Tower . Povidone Iodine Swabsticks (3/pk) . Foley Catheter Securement Device . Foley InserTag . Specimen Container with Cap
Rx Only single Use Only
Date & Time of Insertion:
Name:
Signature:
4006
1. STOP: IS THERE A VALID CLINICAL REASON?
BEFORE INSERTING A FOLEY CATHETER, AT LEAST ON OF THE FOLLOWING CONDITIONS EXISTS:
Select surgical procedures
Prolonged immobilization
End-of-life care
Acute urinary retention or obstruction
Precise measurement of urinary output
Open wounds in incontinent patient
2. CHECK: INSERTION CHECKLIST
CHECK EACH BOX UPON COMPLETION:
Obtain order from physician/provider
Document clinical reason for insertion
Use the smallest catheter possible
Follow aseptic technique
Explain procedure to the patient
Perform hand hygiene
Provide patient education
CRACK AND PEEL OFF THIS STICKER AND KEEP WITH MEDICAL RECORDS
(01)00843892528
4002
4007

FIG. 40

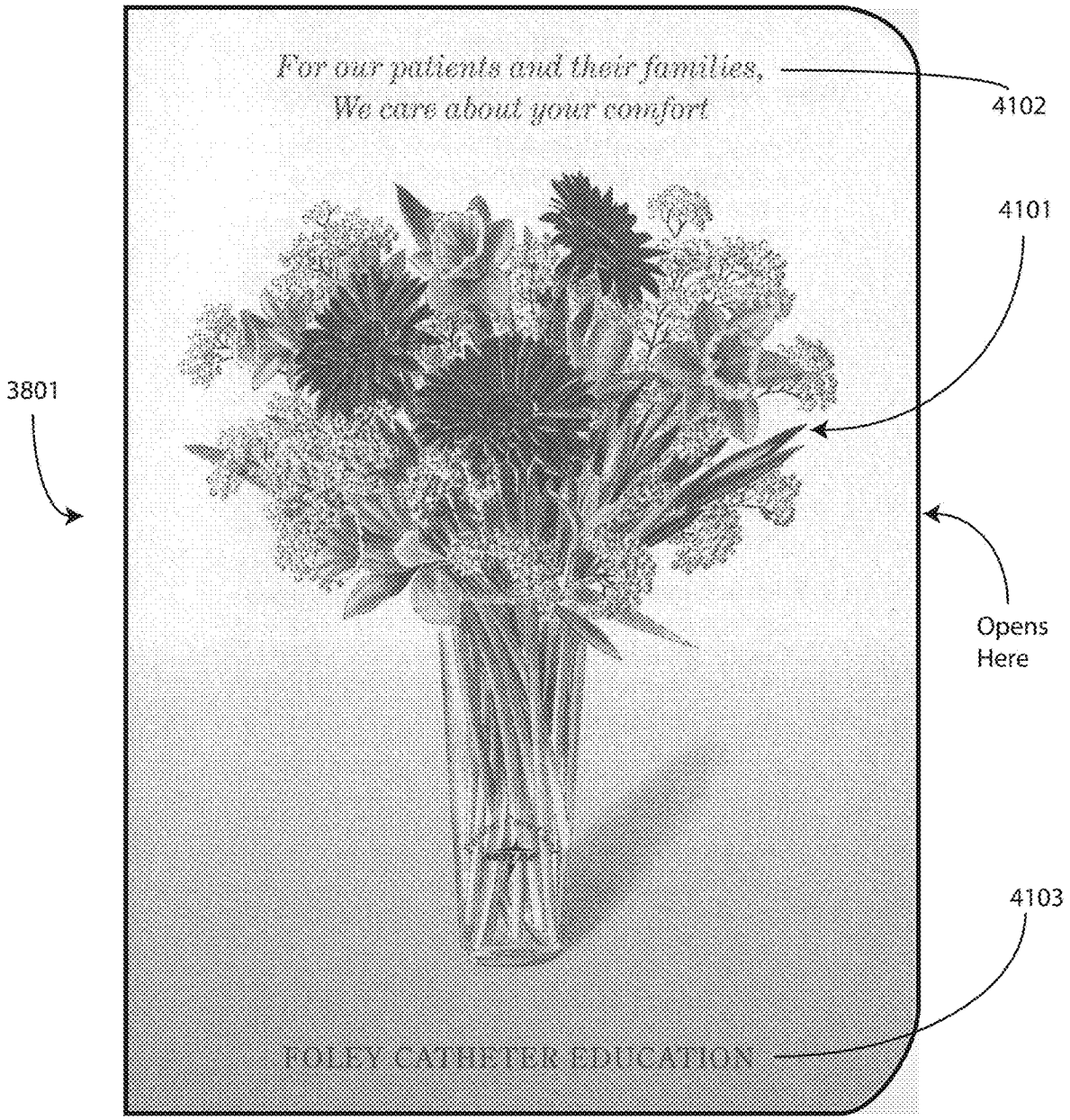
For our patients and their families,
We care about your comfort
4102
4101
3801
Opens
Here
4103
FOLEY CATHETER EDUCATION

FIG. 41

CATHETER TRAY, PACKAGING SYSTEM, INSTRUCTION INSERT, AND ASSOCIATED METHODS

CROSS REFERENCE TO PRIOR APPLICATIONS

This application is a continuation application claiming priority to Ser. No. 15/684,787, filed Aug. 23, 2017, which is a continuation application claiming priority to Ser. No. 14/793,455, filed Jul. 7, 2015, which is a continuation application claiming priority to Ser. No. 13/860,902, filed Apr. 11, 2013, which is a divisional application from Ser. No. 13/155,026, filed Jun. 7, 2011, which claims priority and benefit under 35 U.S.C. § 119(e) from U.S. Provisional Applications: Ser. No. 61/352,140, filed Jun. 7, 2010; Ser. No. 61/352,155, filed Jun. 7, 2010; Ser. No. 61/428,944, filed Dec. 31, 2010; and Ser. No. 61/437,796, filed Jan. 31, 2011, each of which is incorporated herein by reference. Moreover, Ser. No. 13/155,026 is further a continuation in part of: Ser. No. 12/495,148, filed Jun. 30, 2009, which claims priority and bent under 35 U.S.C. § 119(e) from U.S. Provisional Application: Ser. No. 61/183,629, filed Jun. 3, 2009; Ser. No. 12/647,515, filed Dec. 27, 2009; Ser. No. 13/153,265, filed Jun. 3, 2011; and Ser. No. 13/153,300, filed Jun. 3, 2011, each of which is incorporated herein by reference. As the present application claims priority to Ser. No. 13/155,026 through Ser. No. 14/793,455 and Ser. No. 13/860,902, the present application also, by law, claims priority to each of Ser. No. 12/495,148, Ser. No. 12/647,515, Ser. No. 13/153,265, and Ser. No. 13/153,300 through its priority claim to Ser. No. 13/155,026.

This application is related to commonly assigned U.S. Pat. No. 7,624,869 to Primer, which is incorporated herein by reference. This application is related to commonly assigned U.S. patent application Ser. No. 12/004,796, filed Dec. 21, 2007, which is incorporated herein by reference.

BACKGROUND

Technical Field

This invention relates generally to storage containers for medical devices, and more particularly to a storage container for a long, flexible medical implement, such as a catheter, and related medical devices, as well as an instruction manual included therewith.

Background Art

Medical devices, including surgical instruments, supplies, and so forth, are generally shipped from manufacturer to medical services provider in sterile packaging. For example, a scalpel may be shipped to a surgeon in a plastic, vacuum-sealed, sterile package. Similarly, bandages may be shipped in paper, plastic, or paper composite sterile wrappers. When the medical services provider is ready to use the medical supply, the sterile package is removed. The medical services provider then uses the object in accordance with the procedure being performed.

While conventional packaging works well for objects having a generally unchanging form factor, special considerations have to be taken into consideration for some medical supplies. By way of example, catheter assemblies and other flexible equipment is generally shipped in a coiled configuration. Once the sterile packaging is removed, the catheter must be uncoiled prior to use. Care must be taken

in shipping, unwrapping, and using the catheter. For instance, if a catheter is inadvertently bent, kinked, or otherwise damaged, it may no longer be suitable for use. Compounding this issue, catheters are available in a variety of lengths ranging from 100 centimeters to over 250 centimeters.

Traditional catheters are packaged, for example, in individual packaging. The catheter and card are then sealed in a sterile plastic wrap. These catheters are prone to damage in shipment, storage, and when being unpacked, as the card and wrap provide little physical protection.

Some manufacturers have started shipping catheters and other similar devices in flat plastic trays. For example, U.S. Pat. No. 6,068,121 to McGlinch teaches one such tray. The tray has several specifically contoured loops such that one universal tray will accommodate several different sized catheters. Such packaging presents a problem, however, in that large amounts of storage space are taken with a universal tray, especially when a relatively short catheter is shipped therein. Additionally, when in use, these trays occupy large amounts of a medical service provider's sterile workspace or table, leaving little room for related components, such as lubricants, fluid bags, and so forth.

There is thus a need for an improved container for flexible medical devices or catheters that facilitates more effective and simpler deployment of the device during a procedure.

BRIEF DESCRIPTION OF THE DRAWINGS

The accompanying figures, where like reference numerals refer to identical or functionally similar elements throughout the separate views and which together with the detailed description below are incorporated in and form part of the specification, serve to further illustrate various embodiments and to explain various principles and advantages all in accordance with the present invention.

FIG. **1** illustrates a top, front, right perspective view of one embodiment of a tray for a catheter or similar assembly in accordance with embodiments of the invention.

FIG. **2** illustrates a top, front, left perspective view of one embodiment of a tray for a catheter or similar assembly in accordance with embodiments of the invention.

FIG. **3** illustrates a top plan view of one embodiment of a tray for a catheter or similar assembly in accordance with embodiments of the invention.

FIG. **4** illustrates a front elevation view of one embodiment of a tray for a catheter or similar assembly in accordance with embodiments of the invention.

FIG. **5** illustrates a cut-away, left elevation view of one embodiment of a tray for a catheter or similar assembly in accordance with embodiments of the invention.

FIG. **6** illustrates a bottom plan view of one embodiment of a tray for a catheter or similar assembly in accordance with embodiments of the invention.

FIG. **7** illustrates a top, front, right perspective view of one embodiment of a tray for a catheter or similar assembly, with a catheter and corresponding procedural devices disposed therein, in accordance with embodiments of the invention.

FIG. **8** illustrates a top plan view of one embodiment of a tray for a catheter or similar assembly, with a catheter and corresponding procedural devices disposed therein, in accordance with embodiments of the invention.

FIG. **9** illustrates a transparent, front elevation view of one embodiment of a tray for a catheter or similar assembly,

with a catheter and corresponding procedural devices disposed therein, in accordance with embodiments of the invention.

FIG. **10** illustrates a perspective view of one embodiment of a tray for a catheter or similar assembly, with a catheter and corresponding procedural devices disposed therein, along with instructions and packaging, in accordance with embodiments of the invention.

FIG. **11** illustrates a method of manufacturing one embodiment of a tray for a catheter or similar assembly, with a catheter and corresponding procedural devices disposed therein, in accordance with embodiments of the invention.

FIG. **12** illustrates one embodiment of printed instructions in accordance with embodiments of the invention.

FIG. **13** illustrates one embodiment of printed instructions in accordance with embodiments of the invention.

FIGS. **14-19** illustrate exemplary panels of printed instructions in accordance with embodiments of the invention.

FIG. **20** illustrates a physical configuration of printed instructions in accordance with one embodiment of the invention.

FIG. **21** illustrates a method in accordance with embodiments of the invention.

FIGS. **22-30** illustrate various stages of a method of enclosing a medical procedure kit configured in accordance with embodiments of the invention.

FIGS. **31-33** illustrate various stages of a method of deploying a medical procedure kit configured in accordance with embodiments of the invention.

FIGS. **34-37** illustrate various stages of an alternative method of enclosing a medical procedure kit configured in accordance with embodiments of the invention.

FIGS. **38-39** illustrate various stages of an alternative method of enclosing a medical procedure kit configured in accordance with embodiments of the invention.

FIG. **40** illustrates an alternate health care services provider portion of printed materials configured as an adhesive label with an opening flap in accordance with one embodiment of the invention.

FIG. **41** illustrates an alternative patient portion of printed instructions configured as a greeting card and having patient information therein, in accordance with one embodiment of the invention.

Skilled artisans will appreciate that elements in the figures are illustrated for simplicity and clarity and have not necessarily been drawn to scale. For example, the dimensions of some of the elements in the figures may be exaggerated relative to other elements to help to improve understanding of embodiments of the present invention.

DETAILED DESCRIPTION OF THE INVENTION

Embodiments of the invention are now described in detail. Referring to the drawings, like numbers indicate like parts throughout the views. As used in the description herein and throughout the claims, the following terms take the meanings explicitly associated herein, unless the context clearly dictates otherwise: the meaning of "a," "an," and "the" includes plural reference, the meaning of "in" includes "in" and "on." Relational terms such as first and second, top and bottom, and the like may be used solely to distinguish one entity or action from another entity or action without necessarily requiring or implying any actual such relationship or order between such entities or actions. Also, reference designators shown herein in parenthesis indicate components shown in a figure other than the one in discussion. For example, talking about a device (**10**) while discussing figure A would refer to an element, **10**, shown in figure other than figure A.

Embodiments of the present invention provide a medical procedure kit that includes medical products for performing a medical procedure. In one embodiment, the medical procedure kit is configured for a catheterization procedure. Such an embodiment will be used herein for illustration purposes. However, it will be clear to those of ordinary skill in the art having the benefit of this disclosure that embodiments of the invention are not so limited. Other medical procedure kits for performing other procedures could be substituted for the illustrative catheterization tray disclosed herein by substituting other medical implements for the catheterization implements. In the illustrative embodiment, a tray is configured to accommodate a medical device or assembly. In an illustrative embodiment, the medical device is a coiled device, such as a catheter or catheter assembly. In addition to accommodating the coiled medical device, embodiments of the present invention are also configured to contain devices and materials intended for use with the coiled medical device.

Using a catheter assembly as an example, when a catheter assembly is inserted into a patient, sterile water may be used to inflate the catheter. Additionally, the catheter may be coated in a lubricating jelly prior to insertion into the patient. Fluids and other samples may then be monitored and obtained from the patient via the catheter. Embodiments of the present invention provide a single container configured to accommodate not only the catheter assembly and fluid bag, but also syringes containing sterile water or lubricants. Further, the tray can accommodate a sterile specimen jar for capturing samples taken from the patient via the catheter.

In addition to simply accommodating these corresponding medical devices, in one embodiment the tray is configured to provide the medical services provider with mnemonic devices instructing them in which order to use each device. For example, a compartment containing syringes, in one embodiment, includes an inclined, stair-stepped bottom member to present the plungers of each syringe at an easy to reach angle and at different heights based upon order of use.

Another advantage of embodiments of the present invention is that compartments have multi-purpose functionality. For example, in one embodiment, a container configured to accommodate a syringe having lubricating jelly disposed therein is also configured to be used as a lubricating jelly applicator. A medical services provider first dispenses the lubricating jelly into the syringe compartment. The medical services provider then passes the catheter from another compartment through an opening in a barrier separating the compartments into the lubricating jelly. As such, the tray not only serves as a shipping and storage container for an assembly of devices used with a catheter procedure, but also as an application device to assist a medical services provider in using those products together.

Turning now to FIGS. **1-6**, illustrated therein are views of one embodiment of a tray **100** configured to accommodate a catheter assembly in accordance with embodiments of the invention. FIG. **1** illustrates a top, front right perspective view of the tray **100**. FIG. **2** illustrates a top, front, left perspective view of the tray **100**. FIG. **3** illustrates a top plan view of the tray **100**. FIG. **4** illustrates a front elevation view of the tray **100**. FIG. **5** illustrates a cut-away, left elevation view of one embodiment of a tray **100**. Likewise, FIG. **6** illustrates a bottom plan view of the tray **100**. For simplicity of discussion, these figures will be referred to collectively

with like reference numerals referring to identical or functionally similar elements throughout the separate views.

The tray **100**, in one embodiment, is formed by a contoured surface **104** that defines the various features and compartments of the tray **100**. The contoured surface **104** of the tray **100** can be manufactured in various ways. For example, in one embodiment, the tray **100** can be thermally formed on a mold from a soft thermoplastic, such as styrene or polystyrene. In another embodiment, the tray **100** can be injection molded. In another embodiment, the tray can be poured on a mold using a quick setting plastic, epoxy, or resin. Other methods of manufacture will be obvious to those of ordinary skill in the art having the benefit of this disclosure.

Exemplary dimensions for one embodiment of the tray **100** are as follows: The length **112** can be between nine and twelve inches, such as ten inches. One illustrative length **112** may be 10.380 inches. Similarly, the width **113** can be between eight and eleven inches, such as nine inches. One illustrative width **113** is 9.250 inches. The height **114** can be between one and three inches. One illustrative height **114** is 1.750 inches.

In one embodiment, the tray **100** includes three main compartments: a first compartment **101**, a second compartment **102**, and a third compartment **103**. The first compartment **101** is separated from the second compartment **102** by a first barrier **105**. The second compartment **102** is separated from the third compartment **103** by a second barrier **106**.

In one embodiment, the compartments are open from the top of the tray **100**—the top being opposite the base members of the tray **100**—and are bounded on the bottom by a first base member **107**, a second base member **108**, and a third base member **109**. The compartments are bounded on the sides by a perimeter wall **110**. In the illustrative "open top" embodiment of FIG. **1**, the perimeter wall **110** ends in a horizontal flange **111** extending substantially orthogonally from the perimeter wall **110**. It will be clear to those of ordinary skill in the art having the benefit of this disclosure that embodiments other than that shown in FIG. **1** are possible without departing from the spirit and scope of the invention. For instance, the top of the tray **100** could have a hinged or snap-coupled lid that is opened or removed to reveal the compartments there beneath.

In one illustrative embodiment, the tray **100** is configured to hold or otherwise accommodate all of the necessary devices and materials to perform a catheter-based procedure on a patient. Said differently, the tray **100** is configured to hold not only the catheter assembly, but the medical devices corresponding to catheter use as well. Using one illustrative procedure as an example, the following devices will be used: a syringe holding sterile water, a syringe holding lubricating jelly or another equivalent lubricant, a catheter assembly, skin cleansing or preparation materials, and a specimen jar. The various compartments and features of the tray **100** shown in FIGS. **1-6** will be described for use with these devices. As will be described in more detail below, additional objects can be included with the tray, such as one or more towels, a drape to cover the patient, rubber gloves, hand sanitizing materials, swab sticks, a securement device, a Foley insert tag, a printed instruction pamphlet, and so forth. The syringe holding sterile water, syringe holding lubricating jelly, catheter assembly, and specimen jar are used for illustration purposes only, as it will be clear that other objects may be added to or substituted for these objects. Further, subsets of these objects may be used.

In one embodiment suitable for procedures using the syringe holding sterile water, syringe holding lubricating jelly, catheter assembly, and specimen jar, in one embodiment, the tray **100** is configured such that these objects are ordered in accordance with their use during the procedure. For example, in one embodiment the tray **100** includes a first compartment **101** for accommodating one or more syringes, a second compartment **102** for accommodating the catheter assembly, and a third compartment **103** for accommodating the specimen jar. These devices stowed in the various compartments will be illustrated and described with respect to FIGS. **7-10** below. The discussion of FIGS. **1-6** will include the features of the tray **100** that make the tray **100** suitable for accommodating these devices.

For example, in one embodiment the first compartment base member **107** includes a stair-stepped contour **115** suitable for accommodating a plurality of syringes at different heights. For example, a first step portion **116** of the stair-stepped contour **115** may be at a different height within the tray **100** than a second step portion **117** of the stair-stepped contour. In the illustrative embodiment of FIGS. **1-6**, the first step portion **116**—which is disposed farther from the first barrier **105** than the second step portion **117**—is shallower than the second step portion **117**. Said differently, the second step portion **117** is disposed at a greater depth within the tray **100** than the first step portion **116**.

The stair-stepped contour **115** can be used as mnemonic device when multiple syringes are stored within the first compartment **101**. For example, it may be intuitive that a syringe placed on a higher step portion may need to be used first. This intuition is further enforced when the higher step portion is disposed farther to the left in a left-to-right usage configuration. Thus, a user receives a mnemonic reminder to use a syringe disposed on the first step portion **116** prior to a syringe disposed on the second step portion **117**, as it is both higher and farther to the left.

Where syringes are stowed in the first compartment **101**, the first compartment base member **107** can further be configured for syringe ease of use. For example, in one embodiment the first compartment base member **107** is inclined relative to other compartment base members. In the illustrative embodiment of FIGS. **1-6**, the second compartment base member **108** and third compartment base member **109** are substantially coplanar with each other. Further, the second compartment base member **108** and third compartment base member **109** are generally flat in these views, although it will be clear to those of ordinary skill in the art having the benefit of this disclosure that contours could be incorporated into one or both of these base members.

In this illustrative embodiment, however, the first compartment base member **107** is configured to be inclined relative to one or both of the second compartment base member **108** and third compartment base member **109**. As such, the stair-stepped contour **115** forms a ramp upon which syringes may be placed so that the plunger of each syringe is predisposed to project upward and out of the tray **100**. Said differently, the stair-stepped contour **115** is configured such that the first step portion **116** and the second step portion **117** are disposed in a non-parallel orientation relative to the second compartment base member **108**. This configuration makes it easier for a medical services provider to grasp the syringes and remove them from the tray **100**.

The first compartment base member **107** may include other features suitable for accommodating one or more syringes as well. In one embodiment, one or both of the first step portion **116** and second step portion **117** include recesses **118**,**119** for accommodating a syringe flange. These recesses **118**,**119** generally function to prevent the syringes

from sliding lengthwise within the first compartment **101**. Similarly, in one embodiment one or both of the first step portion **116** and the second step portion **117** include protrusions **120** that help to prevent the syringes from sliding laterally within the first compartment **101**.

In one embodiment, one or both of the first barrier **105** and the second barrier **106** include openings disposed therein. In the illustrative embodiment shown in FIGS. **1-6**, the first barrier **105** includes a first opening **121** between the first compartment **101** and the second compartment **102**. Similarly, the second barrier **106** includes a second opening **122** between the second compartment **102** and the third compartment **103**. Each of these openings has an opening depth associated therewith. Similarly, each opening has an opening width associated therewith. In the illustrative embodiment of FIGS. **1-6**, the first opening **121** is bounded by a first opening base member **129** and two inclined first opening side members **127**,**128**, while the second opening **122** is bounded by a second opening base member **131**, an inclined second opening side member **130**, and the perimeter wall **110**.

While the opening depths can be the same, in one embodiment the opening depths are different. For example, in the illustrative embodiments of FIGS. **1-6**, the first opening **121** has a first opening depth **123** that is less than the second opening depth **124** of the second opening **122**. Similarly, in one embodiment the opening widths are different. For example, in the illustrative embodiments of FIGS. **1-6**, the first opening **121** has a first opening width **125** that is less than the second opening width **126** of the second opening **122**. Such a disparity in opening depths and widths, as well as the inclusion of inclined opening side members, provides an advantage in some applications.

For instance, in many catheter procedures a pair of syringes—such as syringes having a one-half inch diameter—fits easily into the first compartment **101** when the tray **100** is made with the illustrative dimensions set forth above. However, some procedures require one or more of the syringes to be larger. For example, some syringes are larger in diameter. These larger syringes are capable of nesting within the first opening **121** and second opening **122**. The inclined opening side members prevent the syringe from moving lengthwise, while the disparate opening heights present the plunger of the syringe to the medical services provider for easy removal from the tray **100**.

The stair-stepped contour **115**, working in tandem with the first opening **121**, gives the tray additional advantages over prior art catheter containers. For instance, when the first compartment **101** has a first compartment base member **107** configured with a stair-stepped contour **115**, the first compartment **101** can be used as a lubricant applicator for the catheter.

Specifically, the medical services provider may dispense the lubricating jelly along the second step portion **117**. As the second step portion **117** is lower in the tray **100** than the first step portion **116**, the second step portion **117** serves as a channel in which the lubricating jelly may spread. A medical services provider may then pass the catheter through the first opening **121**, through the channel formed by the second step portion **117**, i.e., along the second step portion **117** through the dispensed lubricating jelly, and out the top of the tray **100** to the patient. This feature of the tray **100** greatly eases the application of lubricating jelly to the catheter when compared to prior art solutions. In one embodiment, the tray **100** is packaged with printed instructions showing the medical services provider how to apply lubricating jelly in this manner. The printed instructions will be described in more detail below with respect to FIGS. **12-23**.

It will be clear to those of ordinary skill in the art having the benefit of this disclosure that alternative methods may be used to apply the lubricating jelly as well. For example, in another embodiment, the lubricating jelly is dispensed directly onto the catheter tubing while the tubing is in or above the first compartment **101**. Excess lubricant falling from the catheter tubing can then collect, and be retained, in the second step portion **117**.

This particular feature highlights another advantage of the "compartmentalized" structure of various embodiments of the invention. As the tray **100** includes multiple compartments, various tasks associated with a catheterization procedure can be completed while keeping the catheter within the tray **100**. The ability to keep the catheter in the tray **100** reduces the risk that the catheter or corresponding devices will be contaminated with bacteria or microbes on other objects within the procedure room. For example, when the first compartment **101** is used to apply lubricating jelly to the catheter, the lubricating jelly can be applied while the catheter is contained within the tray **100**, thereby reducing the risk that the catheter will become contaminated. This correspondingly reduces the risk of infection for the patient receiving the catheter.

Prior art systems, for example such as those in which the catheterization procedure components are shipped in separate containers, may contribute to substandard techniques in that the catheter can become contaminated when moving it from its shipping container. Consequently, the patient can be at an elevated risk of infection as the catheter is moved from one tray to another. Embodiments of the present invention solve this problem by providing a single level tray **100** with compartments. Further, in one embodiment the first compartment **101** includes the first opening **121** so the catheter can stay in place during and after lubrication. By having easy access to the components disposed in the single level tray **100**, the medical services provider can more easily prepare and use the components within the tray **100**. This helps to minimize the risk of contaminating the patient or the sterile field during the procedure.

In one embodiment, the second step portion **117** is configured to be inclined at a shallower angle than the first step portion **116** in at least a portion opposite the recess **119** from the first opening **121**. When configured in such a fashion, the second step portion **117** includes a "cutdown" so that the catheter can stay within the channel both during and after lubrication.

Additionally, the catheter can be placed in both the first opening **121** and second opening **122** during lubrication. When positioned in this configuration, the second opening **122** helps to align the catheter with the first opening for easy passage through the lubrication channel formed by the second step portion **117**.

The tray **100** of FIGS. **1-6** includes additional advantages over prior art catheter packaging as well. For example, in one embodiment, instructions **132** or other graphical indicia can be printed, placed upon, or molded into the horizontal flange **111**. In one embodiment, compartment designations can be placed above each compartment to ensure the medical services provider uses the correct device or material at the correct time. In another embodiment, expiratory dates for materials or devices disposed within the tray **100** may be placed on the horizontal flange **111**. It will be obvious to those of ordinary skill in the art having the benefit of this disclosure that the invention is not so limited. Any number

of various text or picture combinations can be printed on, placed upon, or molded into various parts of the tray. For instance, graphical indicia can be applied to the compartment base members in addition to the horizontal flange **111**. Note that the horizontal flanges, in one embodiment, can terminate in downwardly protruding vertical flanges for increased stability during the printing process.

Another advantage of the tray **100** is that its compartmentalized configuration helps to reduce the risk of contaminating a patient or compromising the sterile nature of the components stored in the tray **100**. Since both the catheter assembly and medical devices corresponding to catheter use are stored within the same tray **100**, the risk of cross-contamination between sterile work areas and non-sterile spaces is minimized. Further, by having the catheter assembly and the devices corresponding to catheter use stowed in a one-level tray rather than a multi-level, stacked configuration, the medical services provider can more easily prepare and use the catheter and corresponding devices disposed within the tray **100**.

Turning now to FIGS. **7-9**, illustrated therein is a tray having a catheter assembly **700**, syringes **701**,**702**, and a specimen container **703** stored therein as a catheter packaging system in accordance with one embodiment of the invention. As with FIGS. **1-6**, FIGS. **7-9** will be referred to collectively with like reference numerals referring to identical or functionally similar elements throughout the separate views. FIG. **7** illustrates a top, front, right perspective view of the catheter packaging system, while FIG. **8** illustrates a top plan view of the catheter packaging system. FIG. **9** illustrates a transparent, front elevation view of the catheter packaging system.

The illustrative catheter packaging system of FIGS. **7-9** includes a tray **100** having a first compartment **101**, a second compartment **102**, and a third compartment **103**. In this illustrative embodiment, the first compartment **101** is configured to accommodate syringes **701**,**702**. The second compartment **102** is configured to accommodate a coiled medical device, such as catheter assembly **700**. The third compartment **103** is configured to accommodate the specimen container **703**. The third compartment **103** can accommodate other materials as well, including skin sanitizers and cleansing liquids, solutions, or gels. As mentioned above, additional devices corresponding to catheter use, including towels, drapes, rubber gloves, and so forth, can be disposed in the tray **100** as well. As an illustration of this flexibility, a towel **704** is disposed beneath the catheter assembly **700**.

As noted above, in one embodiment the flange **111** can include instructions **770** or other graphical indicia. As also noted above, the implements disposed in the various compartments **101**,**102**,**103** can have implements therein arranged in accordance with use. In one embodiment, shown illustratively in FIG. **7**, the instructions **770** can be coordinated with this arrangement, indicating that components disposed in the first compartment **101** should be used first, components disposed in the second compartment **102** should be used next, and so forth. To assist the user in understanding workflow, arrows **771** or other directional elements can be included on the flange **111** as well.

As illustrated in FIGS. **1-6**, each compartment of the tray **100** includes a compartment base member. Further, each compartment is separated by a barrier having an opening therein. A first barrier **105** having a first opening **121** therein separates the first compartment **101** from the second compartment **102**. Similarly, a second barrier **106** having a second opening **122** therein separates the second compartment **102** from the third compartment.

Syringes **701**,**702** are disposed in the first compartment, with one syringe **701** being supported at a different elevation within the tray than the other syringe **702**. The different elevations can be relative to each syringe **701**,**702**, or to other components of the tray **100**, such as the second compartment base member **108**. Said differently, one syringe **701** is supported by the first compartment base member **107** at a shallower depth within the tray **100** than the depth of the second compartment base member **108**. Further, where the first compartment base member **107** is inclined relative to other base members, one or both syringes **701**,**702** will be supported in a non-parallel configuration relative to the second compartment base member **108**. This is most readily seen in FIG. **9**.

As noted above, some medical procedures will call for more materials than can be accommodated by a syringe capable of fitting within the first compartment **101**. For such procedures, the tray **100** can be packed with larger syringes. A large syringe (not shown) can be supported laterally within the tray **100** when it is placed across the tray **100** such that it lies within both the first opening **121** of the first barrier **105** and the second opening **122** of the second barrier **106**. Such a syringe will pass across the top of the catheter assembly **700**, but will be held in place by the side members of each opening.

Turning now to FIG. **10**, illustrated therein is an exploded view of the tray **100** having the catheter assembly **700**, a pair of syringes **701**,**702**, and a specimen container **703** disposed therein. While only a specimen container **703** is shown as being disposed in the third compartment, note that additional items could also be included within the third compartment, including swab sticks.

Other devices could also be inserted into the tray **100** in various compartments as well. For example, in one embodiment, a catheter securement device, and a Foley insertion tag, which is a dated and/or time stamped label that is secured to the catheter tubing once the catheter is inserted, can be inserted into the second compartment **102**. Also, note that the pair of syringes **701**,**702** can be configured as shown in FIG. **10**, or alternatively can be both inserted in the first compartment, as described above. In the configuration of FIG. **10**, rather than having both syringes **701**,**702** disposed within the first compartment **101**, one syringe **702** is disposed laterally in the first opening **121** and the second opening **122** of the first barrier **105** and second barrier **106**, respectively. This configuration is illustrative only.

Once the necessary components are disposed within the tray **100**, the tray can be sealed with a wrap **1000** to keep the internal components sterile. The wrap **1000** can be any of a number of types of material. In one embodiment, the wrap **1000** comprises a Central Sterile Reprocessing (CSR) wrap that is used widely by medical professionals in hospitals, ambulatory surgical centers, and the like during medical procedures. While a CSR wrap is one example of a wrap that can be used, it will be clear to those of ordinary skill in the art that other wraps, such as plastic, cotton, linen, paper, or combinations thereof, can be substituted without departing from the spirit and scope of the invention.

Using a CSR wrap as an illustrative example, in one embodiment as indicated in FIG. **10**, the CSR wrap **1000** is folded about the tray **100** for sealing, and can be correspondingly unfolded to reveal the tray **100**. Once unfolded, the CSR wrap **1000** can then be used in the catheter insertion process. For example, an unfolded CSR wrap **1000** can be used to provide a sterile field in which the tray **100** sits for

unloading and subsequent use. This process will be explained in more detail in the discussion of FIGS. **22-30** below.

Printed instructions **1001** can then be attached to, disposed upon, or disposed within the tray **100**. In one embodiment, the printed instructions **1001** include a health care services portion and a patient portion, as will be shown in FIGS. **12-13** below. The health care services portion can include instructions telling the health care services provider, for example, how to set up a sterile or otherwise clean work environment, how to prepare the catheter assembly **700** disposed within the tray, how to use the other devices within the tray, how to insert the catheter, how to secure the drainage bag to the catheter, how to empty the drainage bag, how to obtain a urine sample, and so forth. The instructions can include pictures or illustrations showing visually how the various steps should be done as well.

The patient portion can include helpful suggestions or instructions for the patient. The patient portion can be detachably coupled to the health care services portion, such as by a perforated line that is easily torn to separate the patient portion from the health care services portion. Examples of suggestions or instructions that may be included in the patient portion include information on what a catheter is, what the patient should understand about the catheter, how to reduce the chance of getting an infection, information about infections commonly associated with catheters, symptoms of infections commonly associated with catheters, and suggestions for home use of the catheter assembly **700**. In one embodiment, the health care services portion may include an instruction for the health care services provider to detach the patient portion from the health care services portion and instructions to discuss the patient portion with the patient.

The health care services portion can tell the medical services provider how to perform a standard catheterization procedure. For instance, in one embodiment, the tray **100** is equipped with an adhesive label that can be used to identify the patient or specimen in the specimen container **703**. Further, a label can be included to mark or otherwise identify the material in the fluid bag attached to the catheter. Such labels can include pre-printed fields, such as date, time and name. Further the printed instructions **1001** can notify the medical services provider that the devices disposed within the tray **100** are ordered corresponding to use during the catheterization procedure.

In another embodiment, the printed instructions **1001** can inform the medical services provider of special instructions. For instance, in one embodiment the printed instructions **1001** can inform the medical services provider not to leave a catheter in a patient for more than forty-eight hours without a physician's approval. Where the printed instructions **1001** include such information, the labels included in the tray **100** may have pre-printed fields for the time of insertion that can be filled in by the medical services provider performing the catheterization procedure.

Once the printed instructions **1001** have been affixed to, or placed with, within, or atop the tray **100**, the assembly can be sealed in a sterile wrap **1002** such as a thermally sealed bag. The thermally sealed bag can optionally include a preformed opening. For example, in one embodiment, the opening can include one or more tabs that a health care services provider is instructed to pull to open the bag. Inclusion of a sterile wrap **1002** not only keeps the contents within the bag sterile, but also allows the instructions to be included with the tray assembly, yet outside the CSR wrap **1000**.

In one embodiment the printed instructions **1001** are disposed atop the CSR wrap **1000** such that the health care services portion of the printed instructions **1001** is disposed on the top of the printed instructions **1001**, with the patient portion being disposed adjacent to the CSR wrap **1000**, such as when the printed instructions **1001** are configured as an accordion-style folded instruction pamphlet. While the printed instructions **1001** of one embodiment are configured as a folded, printed, separate article disposed atop the CSR wrap **1000**, it will be clear to those of ordinary skill in the art having the benefit of this disclosure that the invention is not so limited. For example, in one embodiment the sterile wrap **1002** can be optional. In one embodiment, rather than including separate printed instructions **1001**, the instructions for use can be printed on the CSR wrap **1000** as well.

Additional instruction materials may be included with the completed assembly as well. For example, in one embodiment an adhesive instruction tag **1003** can be affixed to the sterile wrap **1002**. In another embodiment the instruction tag may be adhered to an outer packaging, that encloses the tray, the sterile wrap material or both. For example, in one embodiment the instruction tag **1003** can include information regarding whether a catheter procedure is needed.

Text **1004** such as "Is there a valid clinical reason?" may be included under an instruction to "Stop" that includes the following information:

Before inserting the Foley catheter, at least one of the following conditions should exist:
Acute urinary retention or obstruction
Precise measurement of urinary output needed
Select surgical procedures
Open sacral or perineal wounds in incontinent patient
Prolonged immobilization
End of life care

Further, checklist text **1005** may be included, such as "Checklist for Foley Catheter Insertion" included under the word "Check" that includes the following information:

Check Each Box Upon Completion:
Obtain order from physician/provider
Document clinical reason for insertion
Explain procedure to patient
Use smallest catheter possible
Perform hand hygiene
Follow aseptic technique

Additional information may also be included, such as a fillable form **1006** that provides fields for the date and time of insertion of the catheter to be recorded, the name of the health care services provider, and the signature of the health care services provider. The above text **1004** for the instruction tag **1003** is illustrative only, and may be customized as desired by the manufacturer.

Turning now to FIG. **11**, illustrated therein is a method **1100** for manufacturing a packaged catheter assembly in accordance with embodiments of the invention. At step **1101**, the manufacturer provides a tray (**100**) having at least a first compartment (**101**) for accommodating one or more syringes (**701**,**702**) and a second compartment (**102**) for accommodating a flexible medical device, such as a catheter assembly (**700**). As noted above, in one embodiment the first compartment (**101**) will have a first compartment base member (**107**) having an inclined, stair-stepped contour (**115**). The first compartment (**101**) and second compartment (**102**) can be separated by a first barrier (**105**) having an opening (**121**) therein.

Once the tray (**100**) is procured, the manufacturer can dispose at least one syringe (**701**) in the first compartment (**101**) at step **1102**. Optionally, at step **1103**, the manufac-

turer may include additional components with the tray (**100**). For example, a catheter securement device, a Foley insert tag, or other complementary components may be included at this step **1103**.

In one embodiment, as determined at decision **1105**, a second syringe (**702**) will be disposed in the first compartment (**101**) at step **1106**. In another embodiment, the second syringe (**702**) will be disposed laterally within the first opening (**121**) and, where present, a second opening (**122**) at step **1107**.

At step **1104**, the manufacturer will place the catheter assembly (**700**) in the second compartment (**102**). Other components may be disposed in the tray (**100**) as well, including a specimen container (**703**) that is disposed in a third compartment (**103**) at step **1108**. Further, other devices may be included, such as towels, drapes, printed instructions, one or more antiseptic packets, and so forth. These other devices can be disposed in various compartments within the tray (**100**).

At step **1109**, the tray (**100**) is sealed. This can be accomplished by folding a CSR wrap about the tray (**100**). In such an embodiment, the CSR wrap can be used during the catheter insertion procedure as well. At optional step **1110**, the manufacturer can enclose printed instructions (**1001**). In one embodiment, the printed instructions (**1001**) will direct a user to discharge contents of at least one syringe into the first compartment (**101**) and to pass at least a portion of the catheter assembly (**700**) through the opening and into the contents to lubricate the catheter.

At step **1111**, the manufacturer can place a sterile wrap about the tray (**100**) and the printed instructions (**1001**), where included. A sticker or other sealing device can be applied that indicates the contents to be sterile as well. At step **1112**, the completed assembly can be shipped to a medical services provider.

Turning now to FIGS. **22-30**, illustrated therein is a method of packaging a catheter assembly and corresponding tray in accordance with embodiments of the invention. FIGS. **22-30** illustrate one exemplary method graphically, which each figure representing one or more steps of the method, as the illustrations serve to better explain these steps than would a flow chart or other diagram. While FIGS. **22-30** illustrate one method of packaging a tray and catheter assembly, it will be clear to those of ordinary skill in the art having the benefit of this disclosure that other methods can be used as well. Further, in creating this article of manufacture, i.e., the packaged catheter assembly, the steps of FIGS. **22-30** may be either manual or automated. A person can execute the steps to create the article of manufacture in one embodiment. Alternatively, industrial machinery, equipment, and robotics can be designed and programmed to execute the steps with the assistance of one or more processors and executable instructions stored in memory.

Beginning with FIG. **22**, in this step, a tray **100** is provided. The tray includes at least one compartment, such as the first compartment **101** that is configured for receiving the catheter assembly **700**. As described above, the tray **100** can include additional compartments as well, such as those for receiving syringes, specimen jars, and so forth.

At this step, the catheter assembly **700** is placed within the first compartment **101** as previously described. The tray is then placed upon one or more layers of wrap material **2200**. In one embodiment, the wrap material **2200** can be CSR wrap. For example, in the illustrative embodiment of FIG. **22**, the wrap material **2200** comprises a white layer of CSR wrap measuring 24 inches square. As previously noted, other materials can be used as well, including plastic materials, cotton materials, paper materials, synthetic materials and so forth. The wrap material **2200** can be of different shapes and sizes as well.

While the tray **100** can be sealed with a simple layer of plastic adhered to the top of the tray **100**, providing the wrap material **2200** can be advantageous in many applications. For example, as will be explained below with respect to FIGS. **31-33**, when the wrap material **2200** is a medically usable material, such as CSR wrap, a medical services provider may unfold the wrap about the tray **100** to create a sterile field for the catheterization procedure. For this reason, one or more layers of wrap material **2200** are simply folded about the tray **100** in this illustrative embodiment.

Note that for reference and ease of explanation, the tray **100** will be described as having four sides: a first side **2201**, a second side **2202**, a third side **2203**, and a fourth side **2204**. As these sides will not be visible in every view, due to the folding of the wrap material **2200** about the tray **100**, they are initially noted here. Note that four sides are used because the illustrative tray **100** is rectangular in shape. Were the tray a triangle, there would be three sides. Were the tray ovular or circular, there would be an infinite number of sides.

Turning now to FIG. **22**, at this step a first portion **2301** of the one or more layers of wrap material **2200** is folded about a first side (**2201**) of the tray **100**. In this illustrative embodiment, the tray **100** is oriented at a rotation of approximately forty-five degrees relative to the one or more layers of wrap material **2200**, with both the wrap material **2200** and the tray **100** being rectangular in shape. As such, the first portion **2301** comprises a first corner of the wrap material **2200**. It will be clear to those of ordinary skill in the art having the benefit of this disclosure, however, that embodiments of the invention are not so limited. For example, the wrap material **2200** can be configured as a circle or oval. Executing the step shown in FIG. **22**, a first portion of that material could be folded about a first side of the tray **100** in similar fashion.

Turning to FIG. **23**, illustrated therein is an optional step that can be included in the method of packaging the catheter assembly. As noted above, in one embodiment the one or more layers of wrap material **2200** can be unfolded to create a sterile field about the tray **100**. A patient can be placed atop this sterile field for the catheterization procedure. Even if the surface below the wrap material **2200** is also sterile, the use of the wrap material **2200** as a foundation for the procedure further ensures that the sterile field will not be breached.

Turning now to FIG. **24**, to help ensure that the health care provider does not inadvertently breach the sterile field, in one embodiment a package of liquid hand sanitizer **2401** or other cleanser and/or a package of rubber gloves **2402** may be included. Alternatively, other medical implements such as alcohol wipes or other materials could be enclosed as well. In such an embodiment, upon opening the packaged catheter assembly, the health care services provider may—before ever touching the catheter assembly or tray contents—apply the liquid hand sanitizer **2401** to their hands and dawn rubber gloves. The inclusion of these accessories in the packaging eliminates the need for the health care services provider to have to leave the sterile field to wash their hands, obtain gloves, and so forth.

In the illustrative embodiment of FIG. **23**, the package of liquid hand sanitizer **2401** and package of rubber gloves **2402** are simply placed atop the first portion **2301** of the one or more layers of wrap material **2200**. As will be shown below, they will be held in place by other portions of the one or more layers of wrap material **2200** by way of subsequent folding steps. Other methods of holding them in place,

including light adhesives or the design of pockets in the one or more layers of wrap material **2200** may also be used. The sanitizer **2401** and gloves **2402** are shown placed atop the first portion **2301**, but may be alternatively placed atop, and therefore outside of the sterile field, other layers of the wrap as well, (for example, 2501, 2601, 2801 or the like).

Turning now to FIG. **25**, at this step a second portion **2501** of the one or more layers of wrap material **2200** is folded about a second side (**2202**) of the tray **100**. Where the optional package of liquid hand sanitizer **2401** and package of rubber gloves **2402** are included, the second portion **2501** of the one or more layers of wrap material **2200** may be folded so as to cover or partially cover these items.

Turning now to FIG. **26**, at this step of the method a third portion **2601** of the one or more layers of wrap material **2200** is folded about a second side (**2203**) of the tray **100**. Where the optional package of liquid hand sanitizer **2401** and package of rubber gloves **2402** are included, the third portion **2601** of the one or more layers of wrap material **2200** may be folded so as to cover or partially cover these items.

Turning now to FIG. **27**, illustrated therein is another optional step of the method of packaging the catheter assembly and tray. In many catheterization procedures, a first layer of material will be placed under the patient, while a second layer of material is placed atop the patient. For such applications, the packaged catheter assembly can include an additional layer of wrap material **2701**. In the illustrative embodiment of FIG. **25**, the additional layer of wrap material **2701** comprises a folded layer of CSR wrap measuring 17 by 17.5 inches. The additional layer of wrap material **2701** in this illustrative embodiment is folded as a **4** by **2** matrix.

The one or more layers of wrap material **2200** and the additional layer of wrap material **2701** can be the same type of material. Alternatively, the one or more layers of wrap material **2200** and the additional layer of wrap material **2701** can be different. In one embodiment, for example, the additional layer of wrap material **2701** can be a fenestrated wrap with one or more pre-formed openings suited to the catheterization procedure.

In one embodiment, the additional layer of wrap material **2701** is configured to be visibly distinguishable from the one or more layers of wrap material **2200**. For example, in one embodiment, the additional layer of wrap material **2701** is a different color than the one or more layers of wrap material **2200**. The one or more layers of wrap material **2200** can be white, for instance, while the additional layer of wrap material **2701** can be light blue or light green. Other color combinations can equally be used.

As with the package of liquid hand sanitizer **2401** and package of rubber gloves **2402**, in one embodiment the additional layer of wrap material **2701** can be placed atop portions of the one or more layers of wrap material **2200**. In such an embodiment, the additional layer of wrap material **2701** can be held in place by way of subsequent folding steps, as the additional layer of wrap material **2701** is disposed along other folded portions of the one or more layers of wrap material **2200** prior to folding a fourth portion of the one or more layers of wrap material about the fourth side (**2204**) of the tray (**100**).

As will be shown below, medical procedure kits configured in accordance with embodiments of the invention can include printed instructions. The printed instructions can include a patient portion and a health care services provider portion. The health care services provider portion can include information such as how to use the medical procedure kit, what is included therein, checklists, and so forth. The patient portion can include helpful information for the patient, such as information about the procedure, questions to ask, and post procedure care suggestions. These two portions can be detachably coupled together. Alternatively, they can be separate.

In one embodiment of the invention where the health care services portion of the printed instructions are physically separated from the patient portion, it can be advantageous to stage the various portions at different locations within the assembled medical procedure kit. One advantage offered by embodiments of the invention is that the medical devices and implements can be staged within the kit in accordance with an order of use. Accordingly, the health care services provider can draw out each device in order of use.

Turning now briefly to FIG. **34**, illustrated therein is an alternate embodiment of the stage shown in FIG. **27**. The embodiment of FIG. **34** is well suited to situations in which the health care services portion is physically separated from the patient portion.

In FIG. **34**, another optional step corresponding to a method of packaging a medical procedure kit is shown. As with FIG. **27**, the medical procedure kit of FIG. **34** illustrates a packaged catheter assembly. Also as with FIG. **27**, the packaged catheter assembly can include an additional layer of material **2701**, which may be a patient drape, under-buttocks drape, or a combination thereof disposed within one or more layers of wrap material **2200**. As noted above, the additional layer of material **2701** can be configured to be visibly distinguishable from the one or more layers of wrap material **2200**. For example, in one embodiment, the additional layer of material **2701** is a different color than the one or more layers of wrap material **2200**.

The package of liquid hand sanitizer **2401** and package of rubber gloves **2402**, optionally the additional layer of material **2701**, and the separated health care services portion **3401** of the printed instructions can be placed atop portions of the one or more layers of wrap material **2200**. In such an embodiment, the package of liquid hand sanitizer **2401**, the rubber gloves **2402**, the additional layer of material **2701**, and the separated health care services portion **3401** can be held in place by way of subsequent folding steps, as they are disposed along other folded portions of the one or more layers of wrap material **2200** prior to folding a fourth portion of the one or more layers of wrap material about the fourth side (**2204**) of the tray (**100**). Accordingly, the health care services provider will be readily able to access these devices after unfolding a single fold of the one or more layers of wrap material **2200**.

Turning now to FIG. **28**, the tray (**100**) is enclosed in the one or more layers of wrap material **2200** by folding a fourth portion **2801** of the one or more layers of wrap material **2200** about a fourth side (**2204**) of the tray (**100**) and then tucking at least one of the first portion (**2301**), the second portion (**2501**), the third portion (**2601**), or the fourth portion **2801** of the one or more layers of wrap material **2200** beneath at least another of the first portion (**2301**), the second portion (**2501**), the third portion (**2601**), or the fourth portion **2801** of the layer of wrap material **2200**. In the illustrative embodiment of FIG. **28**, a part of the fourth portion **2801** is tucked beneath parts of each of the (**2301**), the second portion (**2501**), and the third portion (**2601**). This step of tucking encloses both the additional layer of wrap material **2701** and the package of liquid hand sanitizer (**2401**) and the package of gloves (**2402**) within the one or more layers of wrap material **2200**.

Turning briefly to FIG. **35**, illustrated therein is a variation of FIG. **28** in which the printed instructions include a health

care services portion and a patient portion, wherein these portions are separate. In FIG. **35**, as with FIG. **28**, the tray (**100**) is enclosed in the one or more layers of wrap material **2200** by folding a fourth portion **2801** of the one or more layers of wrap material **2200** about a fourth side (**2204**) of the tray (**100**) and then tucking at least one of the first portion (**2301**), the second portion (**2501**), the third portion (**2601**), or the fourth portion **2801** of the one or more layers of wrap material **2200** beneath at least another of the first portion (**2301**), the second portion (**2501**), the third portion (**2601**), or the fourth portion **2801** of the layer of wrap material **2200**. The separated health care services portion **3401** of the printed instructions is thus tucked within the fourth portion **2801**.

The separated patient portion **3501** is then placed atop the fourth portion **2801**. The health care services provider is therefore able to access the separated patient portion **3501** and deliver it to, and possibly discuss it with, a patient prior to unfolding the fourth portion **2801**. The step of tucking shown in FIG. **34** encloses each of the additional layer of wrap material **2701**, the separated health care services portion **3401**, the package of liquid hand sanitizer (**2401**) and the package of gloves (**2402**) within the one or more layers of wrap material **2200**, while leaving the patient portion **3501** outside the various folds of the one or more layers of wrap material **2200**.

Turning now to FIG. **29**, the packaged catheter assembly **2901** can be sealed in a bag **2902** as was described in FIG. **10**. Prior to depositing the packaged catheter assembly **2901** into the bag **2902**, optional printed instructions **1001** can be attached to or disposed upon the packaged catheter assembly **2901** as well. As with FIG. **10**, the printed instructions **1001** can include a health care services portion and a patient portion as shown in FIGS. **12-13**. The instructions can include pictures or illustrations showing visually how the various steps should be done as well.

Turning briefly to FIG. **36**, illustrated therein is an alternative to FIG. **29**, which is used when printed instructions including a health care services provider portion and a patient portion, each physically separate from the other, is included. In FIG. **36**, the packaged catheter assembly **2901** having the tucked-in, separated health care services portion **3401** of the printed instructions is sealed in a packaging material. The packaging material of FIG. **36** is illustratively shown as a bag **2902**.

Prior to depositing the packaged catheter assembly **2901** into the bag **2902**, the separated patient portion **3501** of the optional printed instructions can be attached to or disposed upon the packaged catheter assembly **2901** as described in FIG. **35**.

Once the printed instructions **1001** have been affixed to, or placed with or atop the packaged catheter assembly **2901**, as in either FIG. **29** or **36**, the assembly can be sealed in a sterile wrap such as a bag **2902**, which may be thermally or otherwise sealed. The completed assembly **3001** is shown in FIGS. **30** and **37**, where an outer packaging material is shown. In FIGS. **30** and **37**, the outer packaging material is a thermally sealed bag **2902**. It will be understood that this outer packaging is but one embodiment of the various packaging materials that can be used in accordance with embodiments of the invention. In FIGS. **30** and **37**, the thermally sealed bag **2902** optionally includes a preformed opening **3002**. For example, in one embodiment, the preformed opening **3002** can include one or more tabs that a health care services provider is instructed to pull to open the bag **2902**. Inclusion of a sterile wrap not only keeps the contents within the bag sterile, but also allows the printed instructions **1001** to be included with the tray assembly, yet outside the one or more layers of wrap material (**2200**).

Turning back to FIG. **29**, in one embodiment the printed instructions **1001** are disposed atop the one or more layers of wrap material **2200** such that the health care services portion of the printed instructions **1001** is disposed on the top of the printed instructions **1001**, with the patient portion being disposed adjacent to the one or more layers of wrap material **2200**. As with FIG. **10**, additional instruction materials may be included with the completed assembly as well. For example, in one embodiment an adhesive instruction tag **1003** can be affixed to the bag **2902**.

Turning now to FIGS. **38** and **39**, illustrated therein are steps of method of assembling yet another embodiment of medical procedure kit in accordance with embodiments of the invention. In FIGS. **38** and **39**, the printed instructions are physically separated into a patient portion **3801** and a health care services provider portion **3802**, as was the case in FIGS. **34-37**. However, unlike FIGS. **34-37**, the embodiment of FIGS. **38** and **39** has the health care services provider portion **3802** configured as an adhesive label with the checklist **1003** forming an extension thereof. Further, as will be shown in more detail in FIG. **40**, the health care services provider portion **3802** has a picture of the contents of the medical procedure kit on the top, and has a peelable flap **3803** that may be opened to reveal instructions and other indicia therein.

Another difference in the embodiment of FIGS. **38** and **39** involves the patient portion **3801**. While some embodiments provide a patient portion that is very straight-forward, informational, and clinical in nature, in the embodiment of FIGS. **38** and **39**, the patient portion **3801** is configured as a greeting card. Experimental testing has shown that when the patient portion is configured as an instruction or informational sheet, it is less likely that the patient portion will be delivered to the patient. However, by configuring the patient portion **3801** as a greeting card, such as with a pleasant picture of flowers or similar objects on the front and stylized text providing the information therein, it is more likely to be given to the patient. The patient portion **3801** will be described in more detail below.

Beginning with FIG. **38**, illustrated therein is an exploded view of a tray **100** suitable for use in a medical procedure kit. The tray **100** has the catheter assembly **700**, a pair of syringes **701**,**702**, and a specimen container **703** disposed therein. While only a specimen container **703** is shown as being disposed in the third compartment, note that additional items could also be included within the third compartment, including swab sticks. Other devices could also be inserted into the tray **100** in various compartments as well. For example, in one embodiment, a catheter securement device, and a Foley insertion tag can be inserted into the second compartment **102**. Also, note that the pair of syringes **701**,**702** can be configured as shown in FIG. **38**, or alternatively can be both inserted in the first compartment, as described above. In the configuration of FIG. **38**, rather than having both syringes **701**,**702** disposed within the first compartment **101**, one syringe **702** is disposed laterally in the first opening **121** and the second opening **122** of the first barrier **105** and second barrier **106**, respectively. This configuration is illustrative only.

Once the necessary components are disposed within the tray **100**, the tray can be enclosed with a wrap **1000**. The wrap **1000** can be one or more layers in number, and further can be any of a number of types of material. In one embodiment, the wrap **1000** comprises a CSR wrap.

Using a CSR wrap as an illustrative example, in one embodiment as indicated in FIG. **38**, the CSR wrap **1000** is folded about the tray **100** for sealing, and can be correspondingly unfolded to reveal the tray **100** and other implements. Once unfolded, the CSR wrap **1000** can then be used in the catheter insertion process. For example, an unfolded CSR wrap **1000** can be used to provide a sterile field in which the tray **100** sits for unloading and subsequent use. This process is explained in more detail in the discussion of FIGS. **22-30**.

Printed instructions can then be attached to, disposed upon, or disposed within the tray **100**. In the illustrative embodiment of FIG. **38**, the printed instructions are configured as a physically separate health care services portion **3802** and a patient portion **3801**, as will be shown in more detail in FIGS. **40-41** below. The health care services portion **3802** can include instructions telling the health care services provider, for example, how to set up a sterile or otherwise clean work environment, how to prepare the catheter assembly **700** disposed within the tray, how to use the other devices within the tray, how to insert the catheter, how to secure the drainage bag to the catheter, how to empty the drainage bag, how to obtain a urine sample, and so forth. The instructions can include pictures or illustrations showing visually how the various steps should be done as well.

In the embodiment of FIG. **38**, the health care services portion **3802** is configured with a checklist **1003** extending therefrom. Further, the health care services portion **3802** includes, in one embodiment, a photograph of the contents disposed within the medical procedure kit. When viewing the health care services portion **3802** from the top, the health care services provider is able to easily inventory what contents are disposed therein.

In one embodiment, the health care services portion **3802** includes a peelable flap **3803**. By pulling back the peelable flap **3803**, the health care services portion **3802** opens to reveal instructions and other information therein. For example, in one embodiment, the interior of the health care services portion **3802** can include one or more of the panels shown in FIGS. **15-19**. In one embodiment, the health care services portion **3802** may include an instruction for the health care services provider to give the patient portion **3801** to the patient, and in one embodiment, instructions to discuss the patient portion **3801** with the patient.

The patient portion **3801** can include helpful suggestions or instructions for the patient. The patient portion **3801** can be configured as a greeting card to make the information more pleasantly received by a patient. Examples of suggestions or instructions that may be included in the patient portion include information on what a catheter is, what the patient should understand about the catheter, how to reduce the chance of getting an infection, information about infections commonly associated with catheters, symptoms of infections commonly associated with catheters, and suggestions for home use of the catheter assembly **700**.

In the embodiment of FIG. **38**, the patient portion **3801** is disposed within the packaging **3804**, while the health care provider portion **3803** is affixed to the outside of the packaging **3804**. As with FIG. **34**, the medical procedure kit of FIG. **38** can include an additional layer of wrap material **2701** disposed within one or more layers of wrap material **2200**. As noted above, the additional layer of wrap material **2701** can be configured to be visibly distinguishable from the one or more layers of wrap material **2200**. For example, in one embodiment, the additional layer of wrap material **2701** is a different color than the one or more layers of wrap material **2200**.

The package of liquid hand sanitizer and package of rubber gloves described above (not shown in FIG. **38** for simplicity) can then be placed under the additional layer of wrap material **2701**. The patient portion **3801** can be placed atop the additional layer of wrap material **2701**. In such an embodiment, the package of liquid hand sanitizer (where used), the rubber gloves (where used), the additional layer of wrap material **2701**, and the patient portion **3801** can be held in place by way of a final folding step **3805**. Accordingly, they will be held in place by a folded portion **3806**. The health care services provider will be readily able to access these implements after unfolding the folded portion **3806** shown in FIG. **38**.

The health care services portion **3802** can be affixed to the packaging **3804**. The packaging **3804** can optionally include a preformed opening. For example, in one embodiment, the opening can include one or more tabs that a health care services provider is instructed to pull to open the packaging **3804**.

Turning now to FIG. **39**, illustrated therein is the medical procedure kit **3901** of FIG. **38** having the patient portion **3802** tucked-into the one or more layers of wrap **2200**. The health care services portion **3802** is affixed to the packaging **3804**. The packaging **3804** of FIG. **39** is illustratively shown as a thermally or adhesively sealed bag.

Turning now to FIGS. **12-13**, illustrated therein is one embodiment of the printed instructions **1001** in accordance with embodiments of the invention. The printed instructions **1001** can be configured as an instruction manual suitable for inclusion with a tray (**100**) as described above. FIG. **12** illustrates a view of a first side of the instruction manual, while FIG. **13** illustrates a view of a second side of the instruction manual.

In one embodiment, the printed instructions **1001** are configured as a two-portion instruction manual having a health care services portion **1201** and a patient portion **1202**. In the illustrative embodiment of FIGS. **12-13**, the patient portion **1202** is detachably coupled to the health care services portion **1201**, and is thus separated from the health care services portion **1201**, by a perforation **1203**. For example, where the printed instructions **1001** are configured as a printed material on a paper-based stock, the perforation **1203** can be a perforated line running along a dimension of the printed instructions **1001** such that the printed instructions **1001** can be easily torn along the perforation **1203** to separate the patient portion **1202** from the health care services portion **1201**. Note that the embodiment of FIGS. **12** and **13** is but one illustrative embodiment of the invention. The patient portion **1202** need not be detachably coupled to the health care services portion **1201**. As will be shown in FIGS. **27-34** below, the patient portion **1202** may be physically separate from the health care services portion **1201** as well. In the separated configuration, the health care services portion **1201** and patient portion **1202** can be disposed at different locations within a medical procedure kit.

In one embodiment, the printed instructions **1001** are configured as a plurality of panels **1204**,**1205**,**1206**,**1301**, **1302**,**1303**. As will be shown in FIG. **20**, in one embodiment the printed instructions **1001** can be configured as an instruction manual that is formed with an accordion-style fold, with each of the panels **1204**,**1205**,**1206**,**1301**,**1302**,**1303** forming a page of the instruction manual. In the illustrative embodiment of FIGS. **12-13**, panels **1204**,**1205** and panels **1301**, **1302** form the health care services portion **1201**, while panels **1206**,**1303** form the patient portion. Panels **1206**, **1303** are separated from panels **1204**,**1205** and panels **1301**,

1302 by the perforation 1203 such that the patient portion 1202 is tearably separable from the health care services portion 1201.

In one embodiment, the health care services portion 1201 includes instructions 1304 for using the catheter assembly and other corresponding medical devices disposed within the accompanying tray. The instructions 1304 can include text and/or figures or illustrations showing how to use the catheter assembly and corresponding medical devices on the patient, as well as instructions on preparation, taking samples, preventing infection, and so forth. The instructions 1304, in one embodiment, also include an instruction to detach the patient portion 1202, give the patient portion 1202 to the patient, as well as an instruction to discuss the information disposed on the patient portion 1202 with the patient.

Similarly, the patient portion 1202 may also include instructions 1305 and/or helpful suggestions for the patient who is undergoing the catheterization procedure. For instance, this information can include any one or more of the following: a description of what a catheter is, what the patient should know about the catheter, how to reduce the chance of getting an infection from the catheterization procedure, what infections commonly associated with catheterization procedures typically are, the symptoms associated with infections commonly associated with catheterization procedures, and information about using the catheter at home. Additionally, the patient portion 1202 may include custom information as well. For example, in one embodiment the patient portion 1202 includes an informational section configured such that the health care service provider's name and contact information can be written thereon. It will be clear to those of ordinary skill in the art having the benefit of this disclosure that the invention is not so limited. For example, additional types of health care service instructions or patient instructions or suggestions can also be included.

Turning now to FIGS. 14-19, illustrated therein are exemplary panels 1204,1205,1206,1301,1302,1303. These panels 1204,1205,1206,1301,1302,1303 are intended to illustrate exemplary instructions for the health care services portion (1201) and patient portion (1202) of an illustrative instruction manual for a catheter assembly and corresponding medical devices included with an accompanying tray (100). It will be clear that these panels 1204,1205,1206,1301,1302, 1303 and the information printed thereon can be varied in any number of ways without departing from the spirit and scope of the invention as described herein and recited in the following claims. For example, the number of panels can be varied. Additionally, the information printed thereon can be condensed, expanded, or altered without departing from the spirit and scope of the invention. Also, the exemplary information may be moved from the panels shown to other panels, as a particular application may warrant.

Beginning with FIG. 14, illustrated therein is one exemplary panel 1204. In one embodiment, panel 1204 will be configured such that when the catheter package assembly within which the instruction manual is disposed is initially opened, panel 1204 will be readily viewable. For example, where the catheter package assembly is assembled as shown in FIG. 10 above, once the sterile wrap (1002) is removed, the panel 1204 will be viewable prior to removal of the CSR wrap (1000).

Panel 1204 can include general information about the catheter assembly and corresponding medical devices disposed within the tray. For example, this information can include part number information 1401, trade name information 1402, and manufacturer information 1403. A diagram 1404 of the contents of the package assembly may be included as well. The illustrative diagram 1404 of FIG. 14 illustrates a tray 100 having a catheter assembly 700 and corresponding medical devices disposed therein. The corresponding medical devices of this illustrative embodiment include a pair of syringes 701,702 and a specimen container 703. Additionally swab sticks 1408, a catheter securement deice 1409, a Foley insert tag 1410, vinyl gloves 1411, a fenestrated drape 1412, an underbuttocks drape 1413, and a hand sanitizer 1414 solution or wipe are disposed within the tray 100.

In addition to a diagram 1404, panel 1204 can also include a written description 1407 of the elements included in the tray 100. Further, sterility information 1407 can be included. Panel 1204 can even include instructional material 1406 on how to use the instruction manual as well.

Turning now to FIG. 15, illustrated therein is one embodiment of panel 1301. As will be described below with respect to FIG. 20, in one embodiment the printed instructions (1001) are configured as an accordion-style folded instruction manual. In such a configuration, panel 1301 can be disposed on the back of panel 1204. Panel 1301 will therefore be visible upon a health care services provider opening the instruction manual.

Panel 1301 can include instructions for using the catheter assembly and the corresponding medical devices. As can be seen from this illustrative embodiment, panel 1301 can include instructions for setting up a clean work area. The instructions can include text, pictures, illustrations, or combinations of these.

In one embodiment, the instructions for setting up a clean work area include a hygiene performance step 1501, which may include instructions to wash hands, optionally put on gloves (which at this step can be non-sterile gloves), and so froth. The instructions may then include information on opening the remainder of the catheter package assembly. For instance, in FIG. 15 step 1502 indicates that the health care provider should remove the CSR wrap (1000), which in this case is folded about the tray (100). Note that in this illustrative embodiment, as the CSR wrap (1000) is folded about the tray (100), removal of the CSR wrap (1000) by unfolding creates a sterile field about the tray (100).

Step 1503 then instructs the health care provide to pick up the underbuttocks of the patient and to place the underbuttocks wrap beneath the patient. Step 1504 then instructs the health care provider to use the hand sanitizing solution provided with the catheter package assembly.

As with other panels shown in FIGS. 14-19, the various panels may include suggestions 1505 for preventing a catheter associated urinary tract infection. Some of this information is illustratively shown in FIG. 15. It will be understood that this information can be placed on one or more panels.

In addition to information for setting up a clean work area, in one embodiment panel 1301 includes instructions for preparing the catheter assembly (700) as well. For example, step 1506 instructs the health care services provider to don sterile gloves, as the hands were sanitized at step 1504. Step 1507 tells the health care services provider to place the fenestrated drape with a shiny side down on the patient without contaminating the sterile gloves donned at step 1506. Step 1508 instructs the health care services provider to test the balloon of the catheter assembly with the water-filled syringe stored in the first compartment. Step 1508 also instructs the health care services provider to leave the syringe connected to the catheter assembly.

Step **1509** then provides instructions on using the first compartment of the tray as a lubricant application chamber as described above. Specifically, in this illustrative embodiment, step **1509** instructs the health care services provider to inject the lubricating jelly found in the second syringe of the first compartment into the first compartment. Step **1509** also instructs the health care services provider to pass the tip of the catheter through the first opening in the wall separating the first compartment and second compartment into the lubricating jelly, thereby lubricating the tip of the catheter.

Turning now to FIG. **16**, illustrated therein is an exemplary embodiment of panel **1302**. The instructions printed thereon continue to provide the health care services provider with information regarding use of the catheter assembly. For example, in one embodiment, this information includes instructions on inserting the catheter.

At step **1601**, the instructions direct the health care services provider to tear open the swab stick package and to use the swab sticks to clean the patient from the top down. The instruction also notes that each swab stick is intended for one use only to properly maintain the sterile field. Step **1602** directs the health care services provider to initiate the catheterization process by inserting the catheter assembly into the patient. Steps **1603** and **1604** continue this process as shown in FIG. **16**.

Step **1605** directs the health care services provider to secure the drainage bag to the catheter assembly. Step **1606** directs the health care services provider to clean up upon completion of the catheterization process. Step **1607** provides instructions on completing the label on the Foley insertion tag included with the catheter package assembly and attaching it to the tubing or drain bag attached to the catheter assembly.

At step **1608**, the health care services provider is instructed to detach the patient portion (**1202**) from the health care services portion (**1201**) by tearing the two apart along the perforation (**1203**). Step **1609** further instructs the health care services provider to discuss the patient information printed upon the patient portion (**1202**) with the patient. Step **1609** instructs that documentation of the entire procedure should be completed.

Turning now to FIG. **17**, illustrate therein is one embodiment of panel **1303**, which represents a first side of the patient portion (**1202**). This panel **1303** includes information **1701** describing what a catheter is and why a catheter might be used. The panel **1303** also includes information **1702** describing what the patient should know regarding catheters and catheter use. For example, this information **1702** might notify the patient that the health care services provider should wash hands prior to inserting the catheter, and that it is acceptable to ask them to do so if they have not done so before the patient.

The panel **1303** also includes information **1703** regarding how the patient can reduce the chances of getting an infection. This information **1703** can include a statement that the patient should wash their hands prior to touching the catheter assembly. The information **1703** may also include a statement that the drainage bag should always be kept at a level beneath the patient's navel, and that the patient should inform a helper when the bag is more than half full.

Turning to FIG. **18**, illustrated therein is one embodiment of panel **1206**. In this illustrative embodiment, panel **1206** forms the second side of the patient portion (**1202**) of the instruction manual, and accordingly, includes additional information that a patient may wish to know when using a catheter assembly.

By way of example, information **1801** informs the patient as to what common infections associated with catheter use are and how they are contracted. Information **1802** provides symptoms of these common infections, such as fever, blood in the urine, burning or painful urination, or frequent or more urgent urination after catheter removal. Information **1803** informs the patient of what they should know prior to going home after a catheter procedure.

Information **1804** comprises an informational section configured such that a health care provider's name and contact information may be written thereon. This is helpful to the patient in the event that the symptoms recited in information **1802** should arise after the procedure, in that the patient has readily available access to the information required to contact a physician or other health care provider. An advantage of having this information **1804** on the patient portion (**1202**) when the patient portion (**1202**) is detachable is that the patient can take it with them upon completion of the procedure.

Turning now to FIG. **19**, which is a portion of the health care services portion (**1201**), illustrated therein is one embodiment of panel **1205** that provides additional health services information. For example, information **1901** for emptying the drain bag and information **1902** describing how to obtain a urine sample can be included.

Turning now to FIG. **20**, illustrated therein is one physical configuration in which the printed instructions **1001** can be delivered along with the catheter package assembly in accordance with embodiments of the invention. FIG. **20** is but one of many configurations, and embodiments of the invention are not to be limited in this respect, as FIG. **20** is illustrative only.

In FIG. **20**, the printed instructions **1001** are configured as a tri-section, accordion style bi-folded panel. Three sections **2000**,**2001**,**2002** are folded in an accordion style, with two folds **2003**,**2004** existing between the sections **2000**,**2001**, **2002**. When the printed instructions **1001** are configured as shown in FIGS. **12-13**, folding the printed instructions **1001** in this manner allows the health care services portion **1201** to be disposed atop the patient portion **1202**. Further, when the printed instructions are disposed atop a CSR wrap (**1000**) as shown in FIG. **10**, by disposing the patient portion **1202** adjacent to the CSR wrap (**1000**), the health care services provider removing the sterile wrap (**1002**) off of the catheter package assembly will be assured of seeing the health care services portion **1201** first.

Turning now to FIG. **40**, illustrated therein is an alternate embodiment of printed instructions **4000** configured in accordance with embodiments of the invention. The printed instructions **4000** of FIG. **40** are suitable for use as the health care services portion (**3802**) of FIGS. **38-39**, in that it can be configured as an adhesive label with a peelable flap **4001**. Further, the illustrative embodiment includes a checklist **4002** as described above in FIG. **38**.

In the embodiment of FIG. **40**, the top cover of the printed instructions **4000** include a picture **4003** of the contents of the medical procedure kit. In one embodiment, the picture **4003** is a color photograph set on a black background to make visibility simple. Above the picture is a title bar **4004**. In one embodiment, the title bar **4004** tells a health care services provider what type of medical procedure kit is disposed therein, and is white text on a blue background.

A flap indicator **4005** indicates that more information is located within the printed instructions **4000**. The additional information, which can be one or more of the panels shown in FIGS. **15-19** above, can be accessed by the peelable flap

4001. In one embodiment, the flap indicator is configured with black text on a yellow background.

The checklist **4002** can be configured as described above. In the embodiment of FIG. **40**, a red warning bar **4006** having white text thereon is disposed above a checklist section **4007** that is yellow, having black text and white check boxes in this illustrative embodiment.

Turning now to FIG. **41**, illustrated therein is one embodiment of a patient portion **3801** configured as a greeting card as was described with FIGS. **38-39**. The patient portion **3801** in this illustrative embodiment includes an inspirational phrase **4103** on the front cover, along with an aesthetically pleasing image **4101**. The aesthetically pleasing image **4101** of FIG. **41** is a vase of flowers, although it will be clear to those of ordinary skill in the art having the benefit of this disclosure that embodiments of the invention are not so limited. Other aesthetically pleasing images include puppies, sunsets, mountain streams, and so forth. The bottom of the patient portion **3801** includes in identifier **4103** that tells the patient the purpose of the patient portion **3801**.

The interior of the patient portion **3801** can include text. For example, in one embodiment where the patient portion **3801** is to be included with a catheter assembly, the interior includes the following illustrative text:

Here is some simple information about foley catheterization:

1. What is a Urinary Catheter?

A thin flexible tube that drains urine from the bladder into a collection bag. The catheter helps:

When you can't urinate.

To measure how much urine you're producing.

During and after some surgeries or tests.

2. What should you know about your catheter?

Only a trained technician inserts a catheter when necessary, and it is removed as soon as possible.

Caregivers must wash hands with soap or use alcohol-based rubs before and after touching your catheter.

If your caregivers don't clean their hands, politely ask them to.

Do not disconnect the catheter yourself.

Inquire every day whether you still need the catheter.

3. What is 'catheter-associated' urinary tract infection (CAUTI)?

If a catheter introduces 'outside' germs into your urinary tract, they can cause an invention. If a UTI is acquired, you may experience:

Sudden fever and/or bloody urine.

Burning or painful urination, or pain below the stomach.

Frequent, or more urgent, urinating after catheter is removed.

Tell your provider right away. An antibiotic may be needed.

4. Can you reduce your chances of an infection? Absolutely!

Wash your hands before and after touching your catheter.

Make sure the tube is secured to your leg. Never twist, or tug on it.

Always keep the collection bag below the level of your belly button.

Do not disconnect the catheter yourself.

Ask your doctor every day whether you still nee the catheter.

The above information on the patient portion **3801** can be printed in multiple languages, such as in Spanish or in English. Where two languages are used, the back portion may be the same as the image shown in FIG. **41**, but with the inspirational phrase **4102** and identifier **4103** set forth in a different language. Further, alternatives and variations of the information can be substituted for the example set forth above.

Turning now to FIG. **21**, illustrated therein is a method **2100** of using the printed instructions (**1001**) as described herein. At step **2101**, a health care services provider removes the sterile wrap (**1002**) disposed about the catheter package assembly. Where the catheter package assembly is configured as shown in FIG. **10**, removal of the sterile wrap (**1002**) will reveal the printed instructions (**1001**). Where the printed instructions (**1001**) are configured as described in FIG. **20**, with the patient portion (**1202**) disposed adjacent to the CSR wrap (**1000**), the health care services provider will see the health care services portion (**1201**) first.

At step **2102**, the health care services provider accesses the printed instructions (**1001**) and begins to read the panels, which in one embodiment are panels configured in accordance with those described in FIGS. **14-19** above.

At step **2103**, the health care services provider unfolds the outer CSR wrap (**1000**), which in one embodiment is then used to create a sterile field about the tray (**100**). At step **2104**, the health care services provider prepares the workspace, which in one embodiment may be in accordance with steps (**1501**,**1502**,**1503**,**1504**) of panel (**1301**) in FIG. **15**. For example, this may include donning non-sterile gloves, as shown at step (**1501**) of FIG. **15**. This may further include picking up the underbuttocks drape, included with the tray (**100**), by the edge without contaminating the contents and placing the shiny side down under the area of the patient to be prepped as shown at step (**1503**) of FIG. **15**. This may further include using the hand sanitizer as shown at step (**1504** of FIG. **15**.

At step **2105**, the health care services provider prepares the catheter, which in one embodiment may be in accordance with steps (**1506**,**1507**,**1508**,**1509**) of panel (**1301**) as described in FIG. **15**. For example, this can include donning sterile gloves as shown at step (**1506**) of FIG. **15**. This may include placing a fenestrated drape, included with the tray (**100**), with the shiny side down on the patient without contaminating the sterile gloves, as shown at step (**1507**) of FIG. **15**. This may include filling a test balloon of the catheter assembly with water as shown at step (**1508**) of FIG. **15**, and injecting lubricating jelly from a syringe into the first compartment of the tray (**100**) as shown at step **1509** of FIG. **15**.

At step **2106**, the health care services provider inserts the catheter. In one embodiment, this can be in accordance with steps (**1601**,**1602**,**1603**,**1604**) of panel (**1302**) as described in FIG. **16**. At step **2107**, the health care provider secures the drain bag to the catheter assembly, which can be in accordance with steps (**1605**,**1606**,**1607**) described with respect to FIG. **16**.

At step **2108**, the health care services provider detaches the patient portion (**1202**) of the printed instructions (**1001**) from the health care services portion (**1201**). In one embodiment, this occurs by tearing the patient portion (**1202**) from the health care services portion (**1201**) along the perforation (**1203**), thereby transforming the printed instructions (**1001**) or instruction manual from a singular or unitary object into a two-piece object consisting of the patient portion (**1202**) and the health care services portion (**1201**). As described, above, the health care services provider may then discuss the patient portion (**1202**) with the patient and further give the patient portion (**1202**) to the patient to take home after the procedure.

Turning now to FIGS. **31**, **32**, and **33**, illustrated therein is one embodiment of a method of using the packaged

catheter assembly **2901** of FIG. **29**. At FIG. **31**, a health care services provider **3101** opens the outer bag **2902** that is disposed about the tray **100** and removes the bag **2902** to reveal the packaged catheter assembly **2901** therein. The health care services provider **3101** can then access the instruction manual **1001** that is disposed atop the packaged catheter assembly **2901** in this illustrative embodiment.

The health care services provider **3101** can then unfold the one or more layers of wrap material **2200**. Where an additional layer of wrap material **2701** is included, this unfolding step reveals and makes accessible the additional layer of wrap material **2701**. Note that portions of the additional layer of wrap material **2701** may be visible, as shown in FIG. **29**, prior to the steps of unfolding.

As noted above, in one embodiment the one or more layers of wrap material **2200** can be unfolded to form a sterile field. Turning now to FIG. **32**, illustrated therein is a step of the method that utilizes this sterile field. Specifically, in FIG. **32** the health care services provider **3101** places the one or more layers of wrap material **2200** beneath the patient **3201**, thereby transforming the area beneath the patient from a non-sterile field to a sterile field. Said differently, by placing the patient **3201** atop the one or more layers of wrap material **2200**, the patient is effectively moved from a location that may have not been a sterile field to the sterile field atop the one or more layers of wrap material **2200**.

Turning now to FIG. **33**, illustrated therein is a step of the method that may be used when an additional layer of wrap material **2701** is included with the packaged catheter assembly **2901**. In FIG. **33**, the health care services provider **3101** is placing the additional layer of wrap material **2701** atop the patient **3201**. Note that in the illustrative embodiment of FIG. **33**, the additional layer of wrap material **2701** is fenestrated, in that it includes a perforated opening **3301** suitable for performing a catheterization procedure.

In the foregoing specification, specific embodiments of the present invention have been described. However, one of ordinary skill in the art appreciates that various modifications and changes can be made without departing from the scope of the present invention as set forth in the claims below. Thus, while preferred embodiments of the invention have been illustrated and described, it is clear that the invention is not so limited. Numerous modifications, changes, variations, substitutions, and equivalents will occur to those skilled in the art without departing from the spirit and scope of the present invention as defined by the following claims. Accordingly, the specification and figures are to be regarded in an illustrative rather than a restrictive sense, and all such modifications are intended to be included within the scope of present invention. The benefits, advantages, solutions to problems, and any element(s) that may cause any benefit, advantage, or solution to occur or become more pronounced are not to be construed as a critical, required, or essential features or elements of any or all the claims.

What is claimed is:

1. A medical procedure kit, comprising:

a single layer tray comprising a compartment separated by a wall from a lubricating jelly application chamber;

a container of lubricating jelly disposed within the single layer tray; and

a coiled tubing coupled between a Foley catheter and a drain bag, wherein the coiled tubing, the drain bag, and the Foley catheter are disposed within the medical procedure kit;

wherein the lubricating jelly application chamber is configured to receive lubricating jelly from the container of lubricating jelly for lubricating at least a portion of the Foley catheter with the lubricating jelly;

the container of lubricating jelly comprising a syringe containing the lubricating jelly; and

the syringe situated within the lubricating jelly application chamber.

2. The medical procedure kit of claim **1**, further comprising one or more swabsticks disposed within the single layer tray.

3. The medical procedure kit of claim **1**, further comprising a syringe containing water disposed within the single layer tray.

4. The medical procedure kit of claim **3**, wherein the syringe containing the lubricating jelly and the syringe containing the water are arranged within the single layer tray in a left-to-right configuration.

5. The medical procedure kit of claim **4**, wherein the left-to-right configuration comprises a left-to-right usage configuration.

6. The medical procedure kit of claim **3**, wherein the syringe containing the lubricating jelly and the syringe containing the water are arranged within the single layer tray in accordance with an order with which the syringe containing the lubricating jelly and the syringe containing the water are removed from the single layer tray.

7. The medical procedure kit of claim **1**, further comprising a second syringe disposed within the single layer tray, wherein the syringe containing the lubricating jelly and the second syringe are arranged within the single layer tray in accordance with an order with which the syringe containing the lubricating jelly and the second syringe are drawn out of the single layer tray.

8. The medical procedure kit of claim **7**, the second syringe at least partially situated in the compartment.

9. The medical procedure kit of claim **7**, the second syringe is for attachment to the Foley Catheter.

10. The medical procedure kit of claim **9**, wherein the second syringe contains water.

11. The medical procedure kit of claim **7**, wherein the syringe and the second syringe are arranged in the single layer tray in accordance with an order of use during a Foley catheterization procedure.

12. The medical procedure kit of claim **11**, the lubricating jelly application chamber comprising one or more contours for accommodating flanges of one or more of the syringe or the second syringe.

13. A medical procedure kit, comprising:

a first syringe and a second syringe;

a medical assembly comprising a coiled tubing coupled between a fluid drain bag and a Foley catheter;

a single layer tray comprising a first compartment for receiving the first syringe and the second syringe and a second compartment for receiving at least a portion of the medical assembly, the medical procedure kit allowing passage of at least some of the Foley catheter into a lubricating jelly application chamber; and

an outer packaging disposed about the single layer tray;

wherein:

one of the first syringe or the second syringe contains lubricating jelly;

another of the first syringe or the second syringe contains water;

the first syringe and the second syringe are ordered within the single layer tray in accordance an order with which they are drawn out of the single layer tray during a Foley catheterization procedure; and

the first compartment defines one or more contours for accommodating one or more of the first syringe or the second syringe.

14. The medical procedure kit of claim **13**, wherein the second syringe is attachable to the Foley catheter.

15. The medical procedure kit of claim **14**, wherein the single layer tray comprises a third compartment containing one or more swabsticks.

16. The medical procedure kit of claim **15**, wherein a boundary surface defines the lubricating jelly application chamber.

17. The medical procedure kit of claim **16**, wherein the medical procedure kit allows passage of at least some of the coiled tubing into the lubricating jelly application chamber.

18. A medical procedure kit, comprising:

a Foley catheter coupled to a fluid drain bag via a coiled tubing, a first syringe and a second syringe, one or more swabsticks, a specimen container, and a surface defining a single layer tray having a lubricating jelly application chamber with the first syringe and the second syringe disposed within a single compartment and the one or more swabsticks disposed within another compartment;

wherein:

the lubricating jelly application chamber is configured to receive at least some lubricating jelly from the first syringe for lubricating at least a portion of the Foley catheter with the at least some lubricating jelly when the at least some lubricating jelly is in the lubricating jelly application chamber; and

the single layer tray further defines an opening allowing passage of at least some of the coiled tubing into a lubricating jelly application chamber when the lubricating jelly application chamber lubricates at least a portion of the Foley catheter.

19. The medical procedure kit of claim **18**, wherein the one or more swabsticks are disposed within the single layer tray.

20. The medical procedure kit of claim **19**, further comprising a wall situated between the single compartment and the lubricating jelly application chamber.

* * * * *