UNITED STATES PATENT AND TRADEMARK OFFICE

BEFORE THE PATENT TRIAL AND APPEAL BOARD

C.R. Bard, Inc.,
Petitioner,

v.

Medline Industries, LP,
Patent Owner.

Case IPR2025-00401

U.S. Patent No. 11,661,219

DECLARATION OF DR. EDWARD YUN IN SUPPORT OF PETITION FOR INTER PARTES REVIEW OF U.S. PATENT NO. 11,661,219

TABLE OF CONTENTS

Page

I. INTRODUCTION 1

II. PROFESSIONAL BACKGROUND 1

III. BASIS FOR OPINION 6

IV. PREVIOUS DECLARATIONS 7

- A. IPRs 7
- B. Ex Parte Reexaminations 10
- C. District Court Cases 10

V. CATHETERIZATIONS AND CATHETER KITS 10

- A. Foley Catheter Kits 11
- B. Intermittent Catheter Kits 14
- C. Catheterization Procedures 18
  - 1. Foley Catheterization Procedures 18
  - 2. Intermittent Catheterization Procedures 23
- D. Irrigation Procedures 25

VI. SOLAZZO 27

- A. Solazzo Is Not Solely For Irrigation 32
- B. Motivation to Add a Drainage Bag to the Tray of Solazzo 35
- C. Solazzo Is Not Directed to Intermittent Catheterization 37
- D. Solazzo Is Sized to Accommodate a Drainage Bag 38
- E. Solazzo Teaches An Order of Use of Syringes 40

VII. NUMATA 41

- A. Summary 41
- B. The Problem Identified by Numata 42
- C. The Solution Identified by Numata 43
- D. The Applicability of Numata's Invention to Foley Catheterization Procedures 47
  - 1. Surgical Settings 49

2. Non-surgical settings 52
E. Numata's Dimensions 56
F. Lubrication Compartment 58
VIII. SWAB STICKS 68
IX. CONCLUSION.....72

Declaration of Dr. Edward Yun – ’219 Patent - Exhibit List

Exhibit	Description
A	Dr. Edward Yun CV

I. INTRODUCTION

1. I have been retained by counsel for Petitioner C. R. Bard, Inc. in connection with the proceeding identified above. I have been asked to provide my opinions and views on the materials I have reviewed in relation to U.S. Patent No. 11,661,219 ("the '219 patent") (Ex. 1001) and medical knowledge regarding the subject matter of the '219 patent before and at the earliest effective U.S. filing date. I submit this Declaration in support of Bard's Petition for *Inter Partes* Review of the '219 patent against Patent Owner Medline Industries, Inc.

II. PROFESSIONAL BACKGROUND

2. I received a Bachelor of Science degree in Cellular and Molecular Biology from the University of Michigan in 1994. I received my medical degree from Columbia University in 1998 and completed my urology residency training at the University of California, San Francisco in 2004. I became board-certified by the American Board of Urology in 2006, and recertified in 2014.

3. Since 2004, I have been a urology attending at the Urology Center of Southern California. I have also served as Chief of Urology at Riverside Community Hospital. Additionally, I am an Assistant Clinical Professor in the Department of Urology at the University of California, Irvine School of Medicine.

4. I am involved in a number of professional organizations including the American Urological Association and the American Association of Clinical

Urologists. I have also served on several hospital committees, including the Medical Staff Quality Review Committee, Surgical Quality Review Committee, and Ethics Committee. Additionally, I have received academic honors and awards related to my work, such as being named the American Urological Association Gerald P. Murphy Scholar in 2004 and as a fellow by the Society for the Study of Male Reproduction. I have been recognized by the America's Top Urologists' Consumers' Research Council of America as a top urologist.

5. I am listed as the lead author on a number of peer-reviewed publications, abstracts, and book chapters, as set forth in my CV, which is attached to this report as Exhibit A. I am the author of a publication related to catheter placement entitled "Novel microlaparoscopic technique for peritoneal dialysis catheter placement." I have also written articles related to infections that discussed catheter-related infections, i.e., catheter-induced hematuria. I have also been invited to give numerous lectures on topics such as Diagnosing and Treating Urinary Incontinence, as set forth in my CV.

6. I have been involved with the design and administration of numerous clinical studies involving thousands of patients as a medical student at Columbia University and as a resident at USCF for over ten years. Specifically, I sat on a tumor board where we devised new clinical trials for cancer patients. Through these activities, I gained an understanding of how to properly conduct a clinical study,

including information regarding control groups versus treatment groups, data collection, data analysis, sampling biases, etc. To this day, I frequently review new studies as part of my continuing medical education. Because modern medicine is evidence-based, I need to stay up to date with modern data and study methodologies so that, for example, I may accurately inform patients of their chances of surviving certain types of cancer. The field of urology requires a command of the relevant data and understanding of probabilities in order to recommend the best course of treatment for each individual patient.

7. As a practicing urologist, I have extensive experience with urinary catheterization and irrigation procedures. Over the past twenty years of clinical practice, I have personally placed thousands of urethral catheters, including Foley catheters, and performed countless irrigation procedures. Also, in my capacity as a faculty member of the Department of Urology at University of California, Irvine, and my role as an attending physician in our local hospitals, I personally teach the correct placement of urethral catheters to nurses, medical students, and physicians in training.

8. I became a urologist because I enjoy the challenge of performing reparative and reconstructive surgeries of the urinary tract. The practice of a urologist is wide-ranging and includes surgery of both malignant and non- malignant conditions of the kidneys, ureters, bladder, prostate, and scrotum. Urologists also

perform incontinence surgeries and vasectomies. Additionally, a common task performed by urologists is dealing with obstructive uropathy. This includes difficulties with the drainage of urine due to kidney stones, enlarged prostate, nonfunctioning bladders, nerve injuries, and lower urinary tract BPH. In many instances, obstructive uropathy is treated by catheterization.

9. I placed my first urethral (or urinary) catheter during my third year of medical school in 1996. During my residency at the University of California, San Francisco, I placed urethral catheters (mostly Foley catheters) on a daily basis, usually around three to five per day. While nurses often place catheters, there are several reasons why a urologist may be called to place a catheter. For example, when a nurse has difficulty inserting a catheter, a urologist is often called to place the catheter. Also, urologists are often called to place a catheter in the operating room prior to major surgery.

10. When a urologist is called to place a catheter, the nurse often has a catheterization kit that is ready for use. Sometimes a specialty catheter such as a Coude catheter is used when there are difficulties inserting a straight-tip catheter. A Coude catheter is slightly bent at the tip to allow it move around blockages or narrow parts of the urethra. Through my routine placement of urinary catheters starting in medical school in 1996 and through the end of my residency in 2004, I became very familiar with Foley catheters and Foley catheterization kits as they existed during

this timeframe. Since beginning my residence and to the present day, I continue to be familiar with these products because I use them in my daily practice. I have placed thousands of urethral catheters in my career.

11. In addition to placing catheters myself, I also train medical students and nurses on the proper placement of catheters, including Foley catheters. This training has occurred since I graduated from medical school in 1998. Additionally, since 2009, at the University of Irvine, I've held classes where approximately 75 medical students in one session are instructed by me on the proper insertion of a Foley catheter using both a male and female anatomic model at the front of the class. I also teach nurses on the proper insertion of catheters at Riverside Community Hospital where I have served as both the Chair of Urology (from 2009 to 2014) and the Vice-Chair of Urology (from 2015 to Present).

12. I currently have attending privileges at several different hospitals: Riverside Community Hospital, Parkview Community Hospital, Loma Linda University Medical Center Murrieta, Corona Regional Medical Center, Inland Valley Medical Center, Rancho Springs Medical Center, and Temecula Valley Hospital.

13. Throughout my career, I have practiced in a wide variety of facilities including outpatient private offices, nursing homes, rehabilitation facilities, outpatient surgery centers, small community hospitals, VA hospitals, county hospitals, level one trauma centers, and tertiary care academic centers. These

facilities use a variety of Foley catheter kits and brands, including Bard, Medline, and Covidien, though Bard is usually the predominant brand.

14. My curriculum vitae is attached to this declaration as Exhibit A.

15. I am compensated at an hourly rate of $600 for my services on this case. I have no financial interest in the outcome of the case, nor any fiduciary relationship to any of the parties or attorneys involved in this case.

III. BASIS FOR OPINION

16. My opinions and views set forth in this report are based on my education, training, and experience in the field of urology, as well as the materials I reviewed in this case, and the medical knowledge regarding the same subject matter that existed prior to the earliest effective filing date of the ’219 patent. I understand the ’219 patent was filed on March 28, 2020. I have been informed that the ’219 Patent claims priority to various patent applications, the earliest of which is a provisional application filed on June 3, 2009.

17. I have considered information from various sources in forming my opinions. Besides drawing from my experience as a urologist, I also have reviewed the following documents: the ’219 patent (Ex. 1001); U.S. Patent No. 7,278,987 to Solazzo (“Solazzo”) (Ex. 1005); the Certified English Translation of Japanese Patent Application Publication No. 2006-131284 to Numata (“Numata”) (Ex. 1007); U.S. Patent No. 3,166,189 to Disston (“Disston”) (Ex. 1008); U.S. Patent No. 3,329,261

to Serany ("Serany") (Ex. 1009); U.S. Patent No. 4,226,328 to Beddow ("Beddow") (Ex. 1010); Certified English Translation of Japanese Patent No. 2007-229520 to Imai (Ex. 1012); U.S. Patent No. 5,931,303 to Salvadori ("Salvadori") (Ex. 1013); Final Written Decision on Remand (Paper 102), IPR2019-00035 (Ex. 1014); Final Written Decision on Remand (Paper 102), IPR2019-00036 (Ex. 1015); Final Written Decision on Remand (Paper 102), IPR2019-00223 (Ex. 1016); Reducing the risks associated with urinary catheters, Nursing Standard, Vol. 23, No. 29, 47-55 (2009) ("Nursing Standard") (Ex. 2019); Male Catheter Insertion Video, uploaded to YouTube on February 7, 2008 (Ex. 1020); U.S. Patent No. 4,160,505 to Rauschenberger ("Rauschenberger") (Ex. 1021); Institution Decision (Paper 9), IPR2015-00513 (July 15, 2015) (Ex. 1022); Final Written Decision (Paper 57) (IPR2019-00208) (Ex. 1023); Medline Urologicals Better By Design Brochure (2008) (Ex. 1024).

18. I am not an attorney. I describe in this report information regarding Foley catheterization and irrigation procedures as of 2009 that are relevant to the '219 patent. This includes my own experience with catheterizations and catheter kits.

IV. PREVIOUS DECLARATIONS

A. IPRs

19. I previously submitted declarations in the following *inter partes* review proceedings that concern Medline patents that I understand are related to the '219

Patent: IPR2019-00035, IPR2019-00036, IPR2019-00109; IPR2019-00208, IPR2019-00223. In these declarations, I discussed Foley catheterization and irrigation procedures as well as the Solazzo patent. Specifically, I explained why the Solazzo tray would be improved from a clinical perspective if it included a closed-system Foley catheter, i.e., a Foley catheter that is pre-connected to a drainage bag via tubing.

20. I understand that the Patent Trial and Appeal Board ("Board") agreed that there was motivation to add a closed-system Foley catheter to the kit of Solazzo in invalidating numerous of the challenged claims. The Board's reasoning is discussed at length in IPR2019-00208, Paper 57 at 10-22. (Ex. 1023.) I agree with the Board's reasoning and note the Board cites my declaration as well as admissions from Medline's own clinical and technical experts.

21. In my previous IPR declarations, I also provided additional opinions regarding other topics. Specifically, I provided opinions regarding the order of use of syringes of Serany and the components of Solazzo. (*See, e.g.,* IPR2019-00035, Ex. 1071 ¶¶ 40-53.) I understand that the Board found on remand that the combination of Solazzo and Serany rendered obvious claims that recited arranging syringes in their order of use. (Ex. 1014 (IPR2019-00035, Paper 102) at 15-16, 77.)

22. I also provided opinions regarding swab sticks, including explaining why swab sticks (such as the swab sticks taught by Salvadori) are interchangeable

with forceps and cleaning balls (as taught by Serany). (*See, e.g.,* IPR2019-00035, Ex. 1071 ¶¶ 54-58.) I understand that the Board found it would have been obvious to add swab sticks to the tray of Solazzo. (Ex. 1015 (IPR2019-00036, Paper 102) at 26-27.)

23. I also addressed Medline's assertion that Foley catheter kits that Medline alleged embodied the claimed invention because they were single level trays reduced the incidence of catheter associated urinary tract infections ("CAUTI"). (*See, e.g.,* IPR2019-00035, Ex. 1071 ¶¶ 59-114.) I concluded that Medline had not shown that single level trays reduced CAUTI by analyzing the CAUTI data provided by Medline. I understand that the Board agreed that "Patent Owner fails to establish that single level trays reduced CAUTI." (Ex. 1014 (IPR2019-00035, Paper 102) at 63-65.)

24. Finally, I discussed conversations with hospital purchasing departments at the hospitals where I have attending privileges regarding their purchases of Foley catheter kits and identified factors regarding the reasons that a hospital purchased Foley catheter kits. I understand that the Board cited these factors and my testimony in concluding that "Petitioner persuasively argues that its ability to retain existing customers was driven by factors other than a switch to a one-layer tray in the SureStep kit, namely: (1) brand loyalty; (2) the distributors and Group Purchasing

Organizations involved; (3) price; and (4) quality." (Ex. 1015 (IPR2019-00036, Paper 102) at 55.)

B. Ex Parte Reexaminations

25. I have also provided declarations in support of *ex parte* reexamination requests filed by Bard of other related Medline patents. Specifically, U.S. Patents Nos. 8,448,786, 9,283,352 ('352 Patent), and 9,522,753. These declarations are similar to the declarations I submitted in the IPR proceedings discussed above. With respect to the *ex parte* reexamination request for the '352 Patent, I discussed the Numata prior art reference, which I understand had never previously been considered by the Patent Office during the examination of any related Medline patent. I also understand that it was not considered during the previous IPRs.

C. District Court Cases

26. I have also provided several declarations in district court proceedings concerning the same Medline patents discussed above. These opinions are very similar to the opinions I have offered in proceedings before the Patent Office.

V. CATHETERIZATIONS AND CATHETER KITS

27. There are two main types of urethral catheters: intermittent and indwelling (Foley).

28. An intermittent catheter (also known as "in"-and- "out" catheter) is a one-time use catheter to relieve the bladder of its urine.

29. A Foley catheter is an indwelling catheter with a balloon that is designed to remain in the patient for longer periods of time. The balloon is inflated and holds the catheter in place in the bladder.

30. Thus, intermittent and Foley catheters both perform the same function (i.e., to drainage the bladder of urine) for different durations of time. And, as discussed in more detail below, the insertion process (prior to balloon inflation) for both types of catheters is essentially the same. The decision whether to place a Foley catheter versus an intermittent catheter is a clinical determination made by the patient's physician based on the patient's needs, i.e., whether a one-time drainge of urine is sufficient or whether the patient will need to keep an indwelling catheter for continuous drainage (often over the course of several days).

A. Foley Catheter Kits

31. Since I first practiced medicine as a resident, Foley catheters have often come packaged in Foley catheter trays or kits. These kits include sterile items to perform a Foley catheterization procedure such as: a Foley catheter that is pre-connected to a drainage bag or urine meter via tubing; a water-filled syringe for inflation of the balloon of the catheter; lubricant (either in a packet or syringe); a sterile wrap around the tray; an underpad; a fenestrated drape; pre-saturated swabs sticks or cotton balls along with an iodine cleansing solution; gloves; a Foley catheter securement device; hand sanitizer; a urine specimen container; and

instructions for use. All of the items in the kit (i.e., within the outer packaging/bag of the kit) are provided sterile because the entire kit is sterilized. (Ex. 1009 ("Serany) at 1:23-25 ("Everything is available in the proper order of use and in a sterile condition." While everything is provided sterile in Foley catheter kits, the sterility of the Foley catheter is paramount as it is inserted into the human body and often remains indwelling for several days.

32. These Foley catheter kits did not change in any meaningful way during my six years of residency. Nor have these kits changed in any meaningful way during my subsequent 20 years of post-residency practice (from 2004 to 2024).

33. I have reviewed the Nursing Standard article entitled Reducing the risks associated with urinary catheters, which has a March 25, 2009 publication date. The article describes an "all-in-one Foley tray" in Box 1, which is shown below:

BOX 1

Contents of an all-in-one Foley tray

- Two pairs of latex-free gloves.
- Apron.
- Rubbish bag.
- Waterproof surface blanket.
- Sterile field/patient protection fenestrated drape.
- Vial 0.9% sodium chloride solution.
- Five gauze swabs.
- 10ml prefilled syringe of sterile water.
- 10ml syringe.
- Syringe of urethral lubricant.
- Foley catheter stabilisation device.
- Pre-connected catheter and drainage bag (choice of catheters and drainage bags).

(Ex. 2019 (Nursing Standard) at 52.)

34. The Nursing Standard article notes that this "system is a new concept for the UK but has been in use in the United States (US) and elsewhere for a number of years." (Ex. 2019 (Nursing Standard) at 52.)

35. I can confirm based on my full-time urologic practice, which began in 2004, that an all-in-one Foley tray, including the items described in Box 1, was available in the United States for many years before the 2009 publication date of the Nursing Standard article. In fact, most of these items are described in patents that I reviewed and which Bard filed in the 1960s, *i.e.*, U.S. Patent No. 3,166,189 to Disston (Ex. 1008) and U.S. Patent No. 3,329,261 to Serany (Ex. 1009).

36. Foley catheterization kits typically include a "closed-system," *i.e.*, a Foley catheter that is pre-connected to a drainage bag or urine meter further connected to a drainage bag via drainage tubing. Using closed-system Foley catheters represent a clinical best-practice because such catheters have been shown to reduce the rate of catheter-associated urinary tract infections ("CAUTIs). (Ex. 2019 (Nursing Standard) at 51.) In my opinion, it was well-known by 2009 that using closed-system Foley catheters were a clinical best-practice.

B. Intermittent Catheter Kits

37. As with a Foley catheter, an intermittent catheter is either sold individually (requiring the nurse or doctor to obtain additional items to complete the procedure) or as part of an all-in-one kit. All-in-one intermittent catheter kits (including those sold before 2009) included most of the same equipment as the Foley catheter kits discussed above. Specifically, they included:

- A closed-system intermittent catheter pre-connected to a drainage bag
- Lubricant
- Cotton balls, forceps, and iodine/betadine for cleaning the patient (or alternatively swabsticks)
- A specimen container
- An underpad
- A fenestrated drape
- Directions for Use

38. The equipment in a Foley catheter kit and an intermittent catheter kit are therefore very similar because these are both urethral catheters, and the method of insertion is very similar, as described below. The main difference between a Foley catheter kit and an intermittent catheter kit is that an intermittent catheter kit would not include a water syringe because there is no retention balloon to inflate. Additionally, the kit would not include a Foley catheter securement device, which was found in some (but not all) Foley catheter kits, because an intermittent catheter is not indwelling and thus does not need to be secured.

39. Rauschenberger notes that its tray can accommodate a conventional urethral catheter, which as of its 1977 filing date, would have been understood to refer to either a Foley or intermittent catheter as both were "conventional" urethral catheters as of that date.[1] (Ex. 1021 (Rauschenberger) at 1:62-63 ("Channel 21 is adapted to receive a conventional urethral catheter.")) Additionally, Foley and intermittent catheters are generally similarly sized because they are both designed to fit within the patient's urethra. Thus, a tray that is adapted to receive an intermittent catheter would also be adapted to receive a Foley catheter (or vice-versa). The size of the catheter selected ultimately depends on the size of the patients' urethra, and thus kits are supplied with catheters have different diameters (known as a French

[1] Foley catheters were invented in the 1930s. Serany and Disston are patents on Foley catheter kits from the 1960s.

size). Both intermittent and Foley catheters are available in standards sizes such as 14, 15, or 16 French, which will work with most patients.

40. While Rauschenberger refers to its catheter broadly as a "conventional urethral catheter," the preferred embodiment of Rauschenberger shown in the Figures appears to be an intermittent catheter:

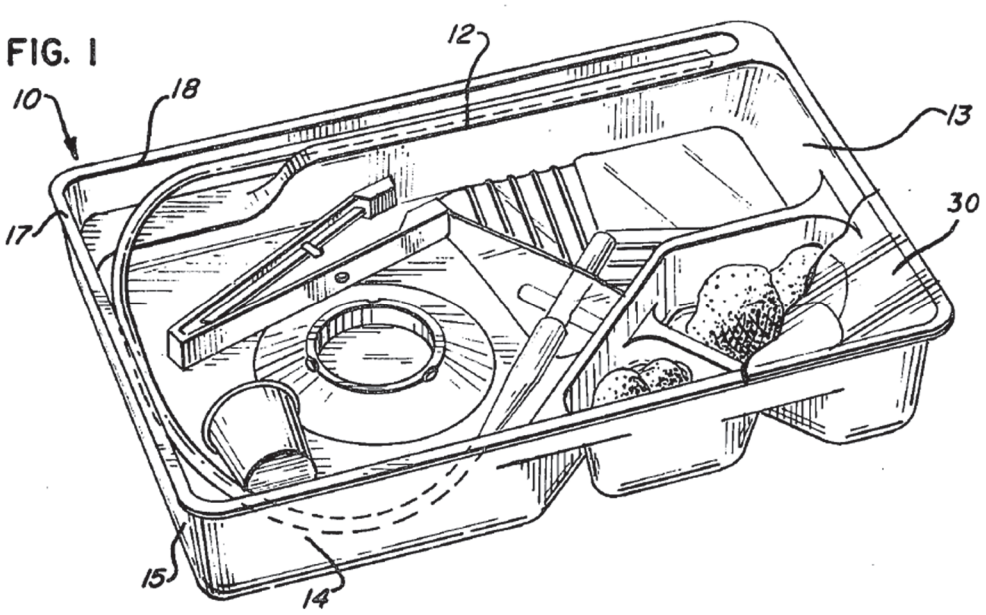

(Ex. 1021 (Rauschenberger) at Fig. 1.)

41. Figure 1 of Rauschenberger (provided above) depicts a urethral catheter connected to a drainage bag, but there is no inflation port to inflate the retention balloon. In contrast, Figure 8 of Solazzo depicts and inflation port as well as shows as the balloon of its Foley catheter:

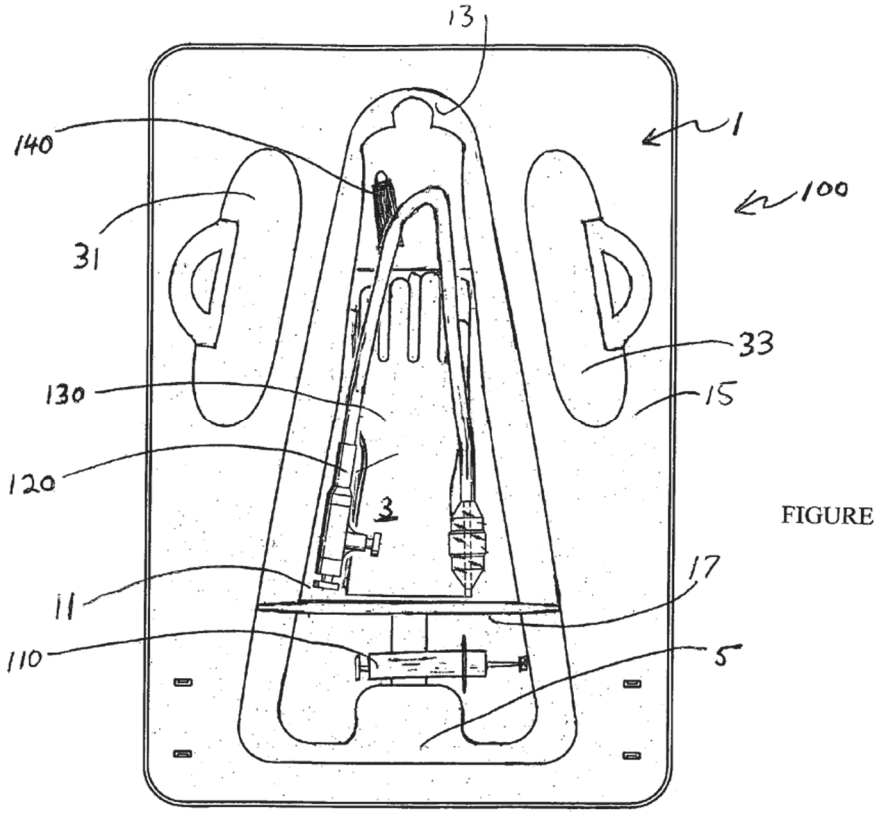

FIGURE 8

(Ex. 1005 (Solazzo) at Fig. 8).

42. Thus, I understand based on this depiction that the urethral catheter of Rauschenberger shown in the preferred embodiment is an intermittent catheter. My understanding is also based on the fact that Rauschenberger does not expressly provide an inflation syringe (filled with sterile water) in the kit of Rauschenberger. With a Foley catheter kit, it is necessary to provide an inflation syringe to inflate the retention balloon of the catheter as shown by Solazzo, Disston, and Serany. The other equipment disclosed by Rauschenberger ("gloves, lubricant, antiseptic solution, fenestrated drape, forceps, drainage bag and specimen container") is equipment typically found in both intermittent and Foley catheter kits. (Ex. 1021

(Rauschenberger) at 2:24-26.) As described below, until the step of inflating the retention balloon which occurs after insertion of the catheter, the steps of inserting a Foley and intermittent catheter are the same.

C. Catheterization Procedures

1. Foley Catheterization Procedures

43. There are several common reasons a patient will require a urinary catheter. First, a male patient with an enlarged, obstructing prostate may develop urinary retention and thus need a catheter in order to urinate. Second, a patient who undergoes a long surgical procedure may require a catheter. Third, a patient is incapacitated in some manner, such as a patient in the ICU, and may require catheterization. For example, women that receive an epidural during childbirth commonly have a Foley catheter placed because they may lose control of their bladder as a result of the epidural. Fourth, a patient may be catheterized to ensure accurate urine measurement. Foley catheters are sold in kits with a pre-connected urine meter for this purpose. Fifth, a patient may be injured in a manner that prevents him or her from urinating. Such injuries include pelvic and neurological injuries.

44. A Foley catheterization procedure in and before 2009 generally involved the following steps. A practitioner (typically wearing clean or sterile gloves obtained from the hospital's supplies) opens the Foley catheter kit by opening the bag enclosing the tray and unfolding the wrap provided around the tray. The

practitioner places an underpad beneath the patient.[2] The underpad may be retrieved from the tray or the practitioner may use a hospital-supplied bed pad known as a chuck. In surgery, an underpad from the tray will not be placed under a patient when performing a Foley catheterization using a kit because the patient is already resting on hospital-supplied pads. In that situation, the underpad in the kit is discarded and placed in the trash.

45. After placing the underpad, the practitioner disposes of his or her existing gloves, and washes his or her hands. Alternatively, he or she uses a hand sanitizer, which may be included in the kit. The practitioner dons new sterile gloves that are provided in the kit. The practitioner places a fenestrated drape on the patient.

46. The practitioner pours a Povidone-Iodine solution on cleansing cotton balls that are provided in the kit. Alternatively, pre-saturated PVP swab sticks may be used for the same purpose. The practitioner cleanses the patient using the cleansing balls or swab sticks.

47. Next, the practitioner lubricates the Foley catheter using a packet of lubricant or lubrication syringe. There are three main approaches to lubricating the catheter. First, a catheter may be lubricated inside the catheter tray, for example, in the compartment where the lubricant packet or syringe is stored. Specifically, the

[2] This describes a Foley catheterization performed by a single individual. When a team of individuals perform the operation, it may be done differently as described in more detail below.

practitioner dispenses the lubricant in a pile within the tray and runs the catheter through the lubricant. Time-pressed practitioners may prefer to lubricate the catheter in the most convenient place, which may simply be the location in the tray where the lubricant is stored.

48. Second, the lubricant may be applied directly on the catheter. When done this way, the catheter does not need to be moved within the tray before it is lubricated. Again, some practitioners may consider this the most convenient approach.

49. Third, an approach favored by urologists with male patients is to squirt lubricant directly into the urethra using a lubricant syringe, which has a tapered tip for this purpose. Accordingly, this approach only works when the catheterization kit provides a lubricant syringe (as opposed to other methods of storage). The advantage of this approach is that no lubricant is wasted. The Nursing Standard article teaches this approach. (Ex. 1019 (Nursing Standard) at 53.) For this reason, lubricant provided in a syringe is preferable to lubricant provided in other containers, such as a packet or tube. Additionally, even when lubricating the catheter in a tray, a syringe is preferable because it offers more control than other containers—allowing the user to more easily and precisely dispense the lubricant in the preferred spot. Again, this is beneficial to the patient because less lubricant is wasted.

50. After lubricating the catheter, the practitioner inserts the catheter.

51. Next, the practitioner attaches the sterile water-filled syringe to the inflation port on the Y-connector of the Foley catheter. Alternatively, a practitioner may choose to attach the water-filled syringe earlier during the procedure so that it is ready to go when the Foley catheter is inserted. However, the water syringe is not attached to the catheter via a luer-lock or other locking mechanism. Moving the catheter with an attached syringe is therefore difficult because an attached syringe will not necessarily stay in place. If precaution is not taken, the syringe may become detached and fall on the ground, which I have witnessed in my practice, resulting in contamination of the syringe. Consequently, my personal practice is to wait until the catheter is inserted to attach the water syringe and inflate the balloon to eliminate the risk of the syringe becoming detached. I further note that inflating the balloon with the syringe requires two hands because the syringe must be held in-place with one hand while the plunger of the syringe is pressed down with the other hand. I have seen medical residents attempt to inflate the balloon with one hand, but the water syringe becomes detached from the inflation port on the catheter and water sprays everywhere. Thus, inflation of the balloon requires two hands. Finally, the practitioner presses down on the plunger of the syringe to inflate the balloon of the Foley catheter.

52. I have been asked whether there is a pre-determined order of use of syringes during a Foley catheterization procedure. A Foley catheter must be

lubricated before it is inserted. A Foley catheter is inserted before its balloon is inflated. Thus, the step of lubricating a catheter must occur before the catheter is inflated. Accordingly, a lubricant syringe is typically used before a water syringe during a Foley catheterization procedure.

53. As described above, however, some practitioners may choose to test inflate the balloon.[3] In that case, the practitioner uses the water syringe both before the lubricant syringe (to inflate the balloon) and after the lubricant syringe (to inflate the balloon once the catheter is inserted). For example, the instructions for use of the '219 patent recite the steps in the following order: (1508) test balloon; (1509) lubricate catheter; (1603) inflate balloon:

[3] Testing was common (though not always done) in and before 2009. This step is no longer commonly performed as I understand the defect rate of catheters has improved such that testing to confirm that the balloon will inflate is no longer necessary.

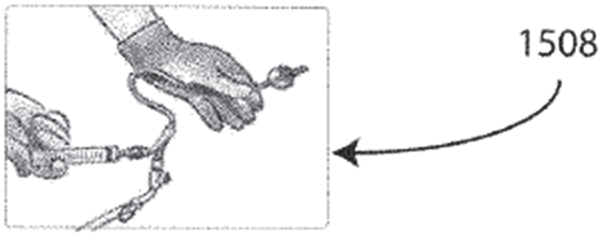

2c. Test balloon with water-filled syringe and leave syringe attached to catheter.

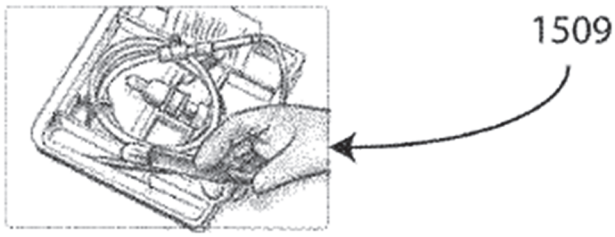

2d. Inject lubricating jelly from syringe into well of tray, then lubricate catheter tip.

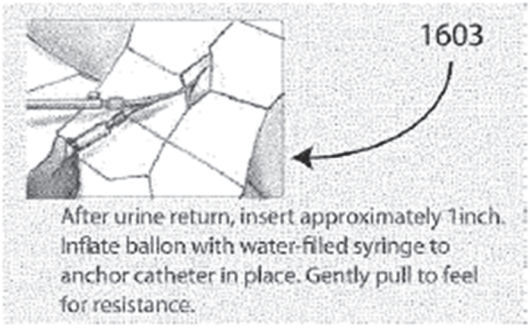

(Ex. 1001 ('219 patent) at Figs. 15, 16).

2. Intermittent Catheterization Procedures

54. An intermittent catheterization procedure is done as a one-time way to relieve a patient of urine. Thus, an intermittent catheter may be placed when it is anticipated that the patient will be able to void urine by herself at some near point in

time following the procedure, and thus an indwelling catheterization is unnecessary. Alternatively, it may be determined that the placement of indwelling catheter is not warranted or unwise for a particular patient (*e.g.*, an elevated risk of CAUTI), and thus an intermittent catheter is instead used to drain the bladder.

55. The steps outlined above with respect to a Foley catheterization procedure are the same with an intermittent catheter up until that inflation of the retention balloon. That step is not performed with an intermittent catheter because an intermittent catheter does not have a retention balloon. But the other steps are performed, *i.e.*, placement of an underpad (or chuck), placement of a fenestrated drape, donning sterile gloves, cleaning of the patient using iodine or betadine, lubricating the catheter, and inserting the catheter. In sum, a Foley catheterization and intermittent catheterization are very similar procedures given they both involve the insertion of a urethral catheter.

56. I note that I am describing intermittent catheterization procedures that would be done by a clinician on a patient in a medical facility, such as a hospital. In these situations, a clinician often uses an all-in-one intermittent catheter kit that includes all of the supplies necessary to perform the catheterization procedure. Again, this equipment is largely the same with the exception of the water syringe and catheter securement device. For example, Rauschenberger describes

catheterization procedures done by an "attending person," i.e., a clinician. (Ex. 1021 (Rauschenberger) at 1:16.)

57. In district court proceedings, Medline's clinical experts have opined that Foley catheters and intermittent catheters are substantially different. I disagree. They are both urethral catheters designed to relieve the patient's bladder of urine and placed in a very similar manner in a medical facility. For example, Medline's experts have opined that Foley catheters and intermittent catheters are different by comparing Foley catheter kits (used in a hospital) with individually packaged intermittent catheters that are used to self-catheterize, typically at home with urine being drained into a toilet as opposed to a drainage bag. As the relevant prior art being discussed here is Rauschenberger—a catheter kit used by a clinician at medical care facility that includes a specimen jar for taking urine specimens—the differences that exist between Foley catheterization and intermittent self-catheterizations are not relevant in my opinion.

D. Irrigation Procedures

58. A catheter can also be used to perform an irrigation procedure. An irrigation procedure involves injecting a fluid (normally a saline solution) through a catheter to clear blood clots. Blood clots can be thought of as clogs that reduce or inhibit the flow of urine. An irrigation procedure often requires the following equipment (in addition to a catheter): an irrigation syringe, a container for a saline

solution, and a collection tray to hold saline that has been flushed through the catheter.

59. Irrigation procedures are often performed with patients that are already catheterized with a Foley catheter. A manual irrigation procedure in 2009 generally involved the following steps. First, the Foley catheter is disconnected from the drainage tubing connecting it to a drainage bag. Second, the practitioner draws up approximately 60mL of saline solution from the container of saline solution using the irrigation syringe. Third, the saline solution is injected into the catheter via the irrigation syringe. Fourth, the practitioner withdraws the fluid from the catheter and dispenses it into a collection tray. Steps two through four are repeated until one or more of the clots are removed and urine can flow again. Finally, the Foley catheter is reconnected to the drainage tubing.

60. Manual irrigation procedures are often done with standard Foley catheters. If it known in advance that irrigation will be necessary (which is uncommon) and the patient does not already have a catheter inserted, a catheter that is designed specifically for irrigation may be inserted, such as a triple-lumen catheter (also known as a three-way catheter). These catheters include an additional lumen and typically come in larger French sizes such that they are more robust with. These catheters allow for a continuous irrigation procedure (as opposed to a manual procedure) that are sometimes necessary when the patient has a more serious clot,

such as when a manual irrigation procedure fails to remove the clot. As discussed below, the catheter of Solazzo is a standard dual-lumen catheter (with the additional lumen being used to inflate the retention balloon). Thus, in my opinion the Solazzo tray is used to perform both catheterization and manual irrigation procedures.

VI. SOLAZZO

61. I have reviewed U.S. Patent No. 7,278,987 to Solazzo. Solazzo describes "an ergonomic urological catheterization/irrigation tray." (Ex. 1005 (Solazzo) at 1:7- 8.) The tray is shaped to fit between a patient's legs with the flange of the tray resting on the patient's legs. (Ex. 1005 (Solazzo) at 2:42-46.) Figure 1 of Solazzo is shown below:

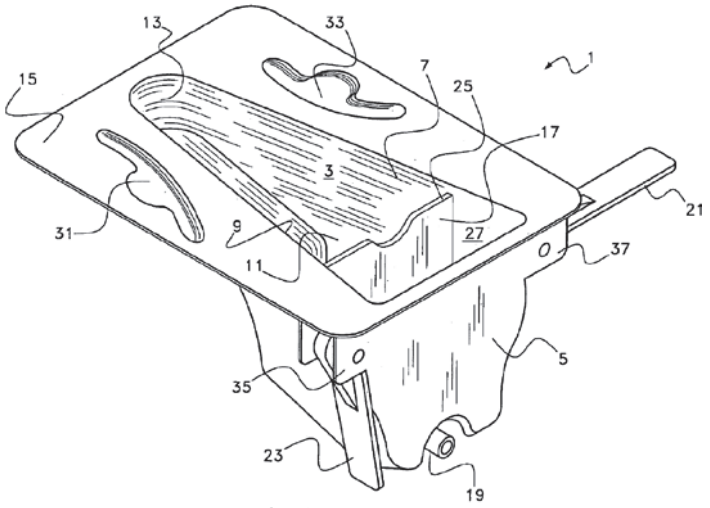

Fig. 1

62. Solazzo describes using the tray "to evacuate the bladder of its contents, urine and/or clots":

> A patient requiring an urological procedure may be positioned with tray 1 at back 13 below the scrotum and

> penis with flange 15 preventing the back portion of tray 1 from sliding or dropping downwardly between the patient's legs by resting the front upper portions of the legs while support wings 21 and 23 will perform a similar function for the front portion of tray 1. The surgeon will proceed to evacuate the bladder of its contents, urine and/or clots.

(Ex. 1005 (Solazzo) at 4:26-33.)

63. Solazzo also notes that "when in a supine position" the patient "may discharge or be relieved into the tray." (Ex. 1005 (Solazzo) at 2:42-46.)

64. Solazzo describes a tray for catheterization procedures. (*Id.* at 1:7-8.) Solazzo describes components of a kit to be used in a catheterization procedure, such as "a Foley catheter," "a urinary tract lubricant," "surgical gloves," and "an inflation syringe for inflation of a catheter with a fluid." (Ex. 1005 (Solazzo) at 3:15-24.)

65. Solazzo does not expressly list all of the components for a long-term catheterization because it does not mention a drainage bag for connection to the Foley catheter. To the extent the kit of Solazzo does not provide a Foley that is pre-connected to a drainage bag, it would not provide a clinically prudent catheterization solution as of 2009.

66. First, if a practitioner has to fetch a drainage bag from another kit to connect to the Foley catheter provided by the Solazzo tray, it would add unnecessary steps to the catheterization procedure. Furthermore, it would increase the risk of a CAUTI because closed-system Foley catheters are known to reduce infection rates.

(Nursing Standard at 51.) Thus, as of 2009, providing a closed-system Foley catheter in the kit of Solazzo would have been an obvious solution to a urologist (or nurse skilled in these procedures) to simplify the procedure and reduce infection rates.

67. Second, Solazzo suggests that urine may be relieved directly into the tray, but this provides only a one-time solution. (Ex. 1005 (Solazzo) at 2:42-46.) Because Solazzo provides an open top tray, the tray of Solazzo is not suitable as a long-term drainage solution. Rather, standard clinical practice is to drain urine into closed containers (such as a drainage bag) as part of a closed-system, which is a more sanitary and odorless solution. (Nursing Standard at 51.) Further, if the patient urinates into the tray, the tray will become contaminated, and the recessed area (or "irrigation well") 3 cannot be utilized to fill an irrigation syringe for an irrigation procedure.

68. I note that utilizing Solazzo with a closed-system Foley catheter does not eliminate the need for the tray for catheterization. The tray, of course, holds the components for catheterization, and the tray is also used during catheterization, e.g., to lubricate the catheter. Nor does utilizing Solazzo with a closed-system Foley eliminate the tray's irrigation feature. Providing a closed-system Foley catheter in a "urological catheterization/irrigation tray" makes sense because of when and how irrigation procedures are performed. As described above, irrigation procedures are often performed with patients that are already catheterized with a closed-system

Foley catheter. Blood clots may arise while evacuating the bladder that clog the catheter. I note that Solazzo specifically refers to evacuating "the bladder of its contents, urine and/or clots" and includes an "irrigation syringe" in its kit. (Ex. 1005 (Solazzo) at 3:22, 4:32-33 (emphasis added).)

69. In such cases, the Foley catheter is disconnected from the drainage tubing to allow for the catheter to be injected with a saline solution from the irrigation syringe. Then, the tray can be used in a number of ways. First, it can simply be used to collect the urine, blood and saline solution as the clot is removed. The tray includes a drain 19 for disposing of this fluid. I note that Solazzo refers to recessed area 3 as an "irrigation well" to receive the fluid and compartment 27 as a "drainage well" to drain the fluid.

70. The references to "irrigation well" and "drainage well" may also refer to another way that Solazzo's tray would have been used for irrigation after the tubing and bag of the closed-system Foley are removed. Two containers are often used during an irrigation procedure: (1) a container to fill an irrigation syringe with a saline solution; (2) a collection tray to hold dispensed fluid. The "irrigation well" and "drainage well" described by Solazzo could serve the function of these two containers during an irrigation procedure. (*Id.* at claim 3.) After the procedure is done, the tray of Solazzo has a drain 19 to drain the fluid from the tray. (Ex. 1005 (Solazzo) at 4:10-12.)

71. Thus, the tray of Solazzo (when provided with a closed-system Foley catheter) provides a highly convenient solution to catheterize and/or irrigate a patient. For example, when a urologist is called to assist with a patient who has been injured in a car accident, the kit of Solazzo (with a closed-system Foley added) would allow the urologist to perform the appropriate procedure, as necessary. If the patient only needs a catheter placed, the kit of Solazzo (with a closed-system added) allows for catheterization without the need to find other components (*i.e.*, a drainage bag). If the patient needs immediate irrigation, the kit of Solazzo allows for that as well.

72. Often, in such circumstances, the urologist will not be certain whether an irrigation procedure is necessary until the Foley catheter has been placed. The urologist will wait to see if the patient's urine is running clear (i.e., free of blood). If so, the closed-system Foley catheter can remain in place. It is clinically preferable to provide a closed-system in a kit that may be broken as necessary to perform an irrigation procedure when patients need it as opposed to starting out with a catheter that is not pre-connected to a drainage bag. If the patient's urine is not clear or the patient is unable to urinate, the urologist can proceed to irrigate by detaching the Foley catheter from the drainage tube (a quick and simple operation) and the urologist can use the compartments (e.g., the "irrigation well") and other

components of Solazzo (e.g., an "irrigation syringe") to facilitate the irrigation procedure.

73. For the reasons listed above, from a clinical perspective in or before 2009, providing a closed-system Foley catheter in the tray of Solazzo would have been obvious to allow for the best clinical practices when using the tray of Solazzo for Foley catheterization and irrigation procedures.

A. Solazzo Is Not Solely For Irrigation

74. To the extent that Medline contends that the purpose of Solazzo is to serve solely as an irrigation tray, I disagree. Solazzo has a dual-purpose in that it serves as both a catheterization and irrigation tray. The dual functionality of Solazzo is mentioned in its title: "Ergonomic Urological Catheterization/Irrigation Tray." The first sentence of the Solazzo patent likewise states: "The present invention is an ergonomic urological catheterization/irrigation tray." (Ex. 1005 (Solazzo) at 1:7-8.)

75. Additionally, the equipment provided in the Solazzo tray, such as a Foley catheter, is inconsistent with the tray being used solely for irrigation. Irrigation trays typically do not include Foley catheters or equipment to insert the catheter such as lubrication. This understanding is further confirmed by commonplace irrigation kits. The photo below shows a Bard Piston Irrigation Tray, which I obtained from my workplace:

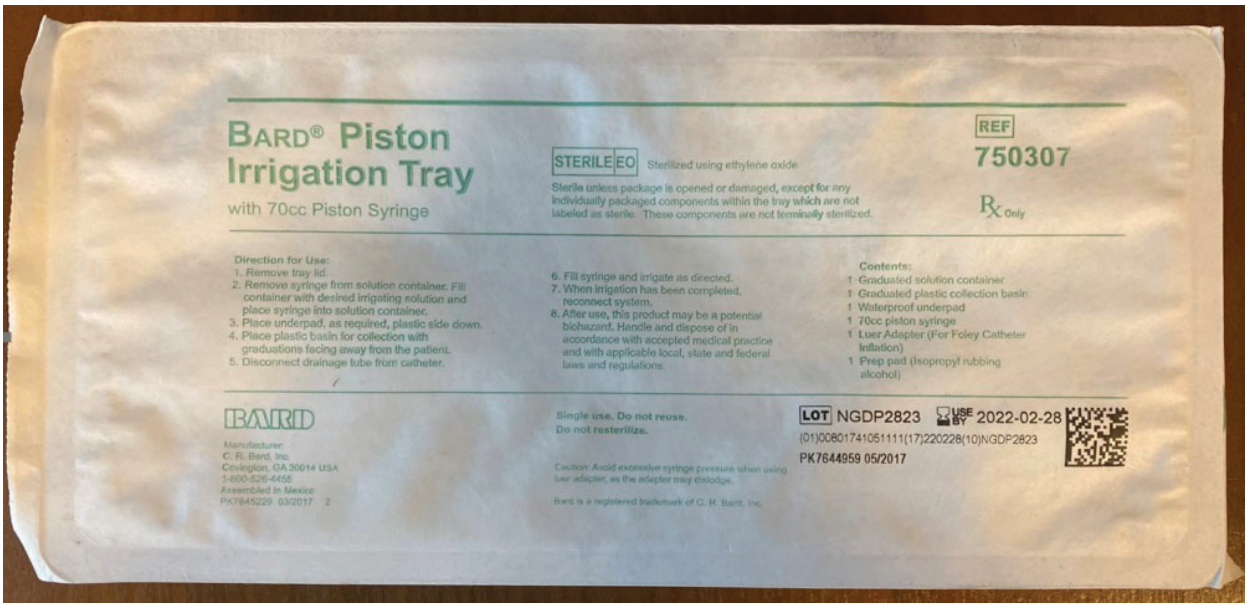

76. The above product is typical of irrigation trays that were available in 2004—when the Solazzo patent was filed—as well as in 2009—the earliest possible priority date of the Medline patent. The listed contents (shown at the right of the image) are: graduated solution container; graduated plastic collection basin; waterproof underpad; 70cc piston syringe; luer adapter (for Foley catheter inflation); prep pad. Note that the tray does not include any catheter at all or equipment to insert a catheter. In contrast, Solazzo not only includes irrigation equipment (namely, an irrigation syringe), but Solazzo also includes a Foley catheter as well as equipment to insert the catheter such as lubricant, gloves, and an inflation syringe. Thus, Solazzo is not merely an irrigation tray, but rather a dual-purpose tray.

77. Additionally, Solazzo expressly provides that the tray may be used to catheterize "and/or" irrigate. Specifically, Solazzo states that: "The surgeon will proceed to evacuate the bladder of its contents, urine and/or clots." (Ex. 1005

(Solazzo) at 4:32-33 (emphasis added); *see also* Ex. 1005 (Solazzo) at 2:42-46.) As I noted above, an irrigation procedure is designed to clear blood clots whereas catheterization is primarily done to evacuate urine from the bladder. Solazzo's reference to evacuating "urine and/or clots" from the bladder thus confirms the dual-nature of Solazzo.

78. Finally, the dual-nature of Solazzo is further confirmed by the fact that catheter shown in Figure 8 has a dual-lumen. A three-way Foley would have an additional lumen as shown in the image below would have an additional lumen:

79. To the extent that Solazzo was designed solely for irrigation procedures, as Medline has previously argued, the kit would more likely be supplied with a three-way catheter instead of the dual-lumen catheter depicted to allow continuous irrigation. That is because if you were only to use Solazzo when a clinician knew in advance that irrigation is necessary (which is rare), it would

probably be a more serious case where a continuous irrigation procedure is either preferrable or necessary. Thus, it would not be particularly useful to supply a Foley catheter in a kit designed solely for irrigation that includes a dual-lumen catheter. This further reinforces that Solazzo has a dual-purpose.

B. Motivation to Add a Drainage Bag to the Tray of Solazzo

80. By 2009, there would have been strong motivation to include a drainage bag for connection to the Foley catheter in the tray of Solazzo. The motivations include reducing CAUTI and making the tray "ready for use."

81. Catheterization is commonly performed to evacuate the bladder. The underlying condition that the practitioner is treating via catheterization is obstructive uropathy. But a practitioner will typically not know whether irrigation is required until after the patient has been catheterized. Specifically, if the patient's urine is running clear after catheterization (i.e., free of blood), the practitioner may determine that irrigation is unnecessary. If there are clots, the practitioner will irrigate to remove the clots. The inherent uncertainty of whether irrigation will be necessary aligns with Solazzo's disclosure that the tray can used to evacuate "urine and/or clots" from the bladder. (Ex. 1005 (Solazzo) at 4:32-33.)

82. As discussed below, including a drainage bag for connection to the Foley catheter in the tray of Solazzo makes sense regardless of whether irrigation is ultimately required. When catheterization is first performed with Solazzo's tray, the

contents of the bladder will be evacuated into Solazzo's tray. Because Solazzo's tray is open, there is a chance of bacteria being introduced. Thus, standard clinical practice is to drain the urine into a closed container, which is more sanitary and odorless, such as a drainage bag. While Solazzo's open tray can operate as a drain, it would certainly be better to evacuate urine into a drainage bag by using a closed system, which is known to reduce CAUTI. This is one motivation for modifying Solazzo to have a drainage bag for connection to its Foley catheter.

83. This motivation also exists if Solazzo's tray is subsequently used for irrigation. If irrigation is deemed necessary after a catheterization (*e.g.*, because there are clots in the urine), the catheter can quickly and easily be disconnected from the tubing to allow for irrigation. Thus, the Foley catheter in Solazzo that was initially inserted for drainage can be used for irrigation. This also helps reduce CAUTI because repeatedly changing a catheter can also lead to infection.

84. I note that the vast majority of patients that are irrigated will need to have the catheter remain in place after the procedure. There are two main reasons. First, to ensure that all clots have been evacuated. Second, there is often another underlying condition that is causing the underlying obstructive uropathy and clotting (*e.g.*, an enlarged prostate) that will not be resolved merely by irrigating. If the catheter needs to remain in place after the irrigation procedure, the practitioner can simply reconnect the drainage tubing and bag to the already inserted Foley catheter.

85. There is another motivation to provide a drainage bag for connection to the Foley catheter in Solazzo's tray. Providing a closed-system Foley catheter ensures the tray has all of the necessary equipment that a nurse or urologist would want at his or her disposal when performing a catheterization and/or irrigation procedure. Because Solazzo is an open system, a drainage bag needs to be obtained from another source when the catheter will remain indwelling in the patient, which as I noted above is common after an irrigation procedure.

86. Providing a drainage bag in the Solazzo tray would make it "ready for use" (in the words of Serany and Disston) without requiring a trip to the supply closet to obtain additional equipment (i.e., a drainage bag). (Ex. 1009 (Serany) at 3:23-26; Ex. 1008 (Disston) at 2:72-3:1.)

87. When using Solazzo to both catheterize and irrigate a patient, there is strong motivation to include a drainage bag for connection to the Foley catheter in the Solazzo tray because the tray will be ready for use from the start and the indwelling catheter will generally be left in place after the irrigation procedure for continued evacuation of the bladder. It would be much more convenient to have a kit with a drainage bag as opposed to requiring an extra trip to the supply closet.

C. Solazzo Is Not Directed to Intermittent Catheterization

88. To the extent Medline contends that Solazzo is directed to intermittent catheterization, I disagree. Solazzo provides a Foley catheter, which includes a

retention balloon. An intermittent catheter does not include a retention balloon. In contrast to an intermittent catheter, a Foley catheter is designed to remain in the bladder for longer periods of time (which is why it has a retention balloon). If the inventor of Solazzo intended his tray to be for intermittent catheterization, presumably the tray would have been equipped with an intermittent catheter (without a balloon) instead of a Foley (with a balloon). One reason that Solazzo likely includes a Foley catheter is that the catheter usually remains in place after irrigation.

89. I also do not see any incompatibility with adding a drainage bag to the kit of Solazzo. The Solazzo tray without any modification can be used to catheterize a patient and then irrigate while the tray is engaged with the patient. If the Solazzo tray with the Foley catheter is modified to have a drainage bag, it too can be used to catheterize the patient and then irrigate while the tray is engaged with the patient. Afterwards, the Foley catheter may remain in the patient and attached to the bag via tubing. At this point, the tray of Solazzo would be disposed of.

D. Solazzo Is Sized to Accommodate a Drainage Bag

90. Solazzo does not expressly list a drainage bag. It does list a "Foley catheter" and "evacuation tubing," which I understand to be a reference to tubing that would be connected to the catheter and bag to assist with evacuating the bladder of its contents. Specifically, the only reference in Solazzo to "evacuation" is a description of "urinary bladder evacuation into the tray." (Ex. 1005 (Solazzo) at

Abstract (emphasis added).) Also, Solazzo states that "The surgeon will proceed to *evacuate* the bladder of it contents, urine and/or clots." (Ex. 1005 (Solazzo) at 4:32-33 (emphasis added).)

91. To the extent Medline contends that the Solazzo tray would not be able to accommodate a drainage bag, I disagree. Solazzo discloses that "[t]he tray has a shape that will fit between the legs of a patient." (Ex. 1005 (Solazzo) at 1:8-9.) Solazzo does not provide the dimensions of the tray. Without any clear disclosure of dimensions, I conclude that the tray of Solazzo is designed to fit the general population of patients. While this means it may not fit every patient (*e.g.*, patients with larger legs), often when patients have larger legs, the tray is not placed between the patient's legs because the tray will not fit between the patient's legs. It is simply not possible to create a tray designed to fit between the legs of all patients given the variations in patient size. When Solazzo states that the "[t]he tray has a shape that will fit between the legs of a patient," that does not mean the tray will fit between the legs of every single person on the planet. (Ex. 1005 (Solazzo) at 1:8-9.) Rather, I understand this to mean that the tray will fit between the legs of most patients. While there are certainly patients that need catheterization with limited mobility or patients that have larger sized legs, often no tray is placed between the legs of such patients. The reason is that no tray of any reasonable dimensions would be able to fit. Thus, it is difficult for me to imagine a functional tray with dimensions that would

ensure that the tray fits between the legs of all patients. When Solazzo states that the "[t]he tray has a shape that will fit between the legs of a patient," I therefore understand this to be a reference to the general population as opposed to a patient with special constraints.

92. I note that a tray designed to fit between the legs of a typical patient would have plenty of room to accommodate a closed-system Foley catheter. For example, trays that I have used before 2009 to catheterize patients were at least approximately 8 inches wide, and these trays fit between the legs of many patients.

E. Solazzo Teaches An Order of Use of Syringes

93. Solazzo recites the order of use of the components during a Foley catheterization: "The gloves being worn by the surgeon, the catheter being lubricated, inserted and then inflated with fluid using the syringe." (Ex. 1005 (Solazzo) at 4:46-48.) Thus, Solazzo discloses using the lubricant before the inflation syringe and this use directs the placement of elements in a tray. As Serany explains, components are arranged in a tray to "facilitate the nurse's or physician's task." (Ex. 1009 (Serany) at 1:33-35.)

94. Indeed, Solazzo discloses the placement of the lubricant tube and inflation syringe in its tray in manner that "facilitates the nurse's or physician's task." The lubricant and inflation syringe are supported within the tray at different heights due to the fact that "bottom 11 has [a] terraced arrangement with low area

11A and shallow area 11B." (Ex. 1005 (Solazzo) at 3:65-66.) Specifically, the tube of lubricant is supported in shallow area 11B and the inflation syringe in low area 11A. Consequently, the tube of lubricant is supported at a higher height within the tray than the inflation syringe. Solazzo thus discloses the lubricant tube (replaceable with a syringe) and inflation syringe are arranged in accordance with their order of use within the tray.

VII. NUMATA

95. I have reviewed a certified English translation of Japanese Patent Application Publication No. 2006-131284 to Numata ("Numata"), which I understand to be prior art to the '219 Patent based on its May 25, 2006 publication date. I offer opinions from the perspective of a clinician with vast experience in both inserting urethral catheters and the use of sterile medical kits in surgical and non-surgical settings.

A. Summary

96. Numata is directed to a "package body for storing and preserving a medical product 200 while maintaining the aseptic state thereof." (Ex. 1007 (Numata) at Abstract; claim 1.) The package body "comprises a packaging bag for sealing the medical product and a band-shaped member for binding the medical product inside the packaging bag." (Ex. 1007 (Numata) at claim 1; ¶ 0010.) The medical equipment is stored in a "single tray." (Ex. 1007 (Numata) ¶ 0005.) The

medical product stored in the tray "include[s] medical instruments that are introduced into the human body" such as catheters. (Ex. 1007 (Numata) ¶ 0030; Fig. 4.)

97. The exemplary equipment of Figure 4 of Numata shows "gloves," "syringes, "catheters," "forceps," "cotton," and "injection needles" disposed in a single tray as shown below:

(FIG. 4)

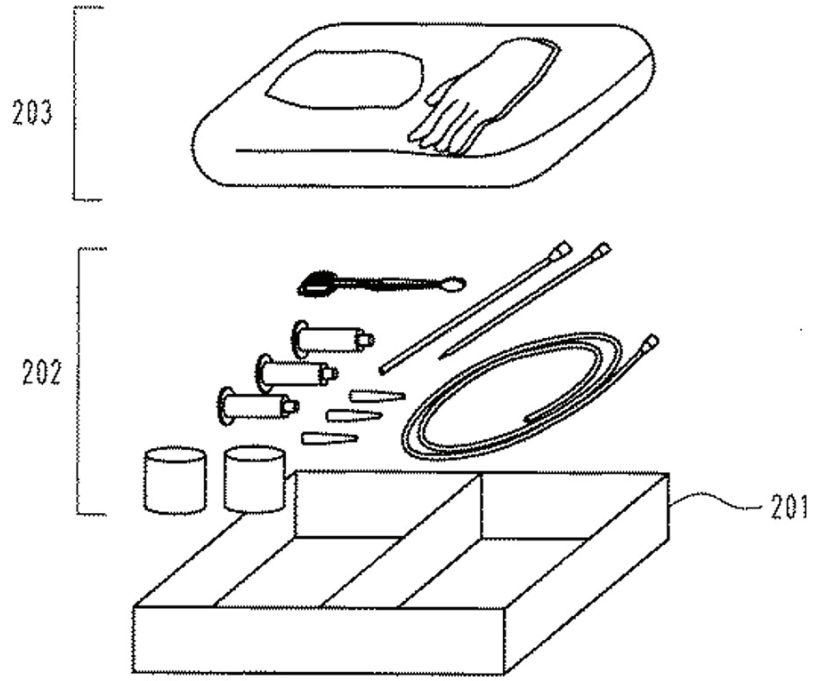

(Ex. 1007 (Numata) ¶ 0031; Fig. 4.)

B. The Problem Identified by Numata

98. Numata notes that medical procedures often employ "disposable medical instruments in order to reduce the risk of nosocomial infections." (Ex. 1007

(Numata) ¶ 0002.) These medical instruments are sterilized by the manufactured and delivered in a sterilized state. (Ex. 1007 (Numata) ¶ 0004.) However, the "outside of the packaging" (i.e., the outer surface of the bag) is not sterile and "may be microbially contaminated." (Ex. 1007 (Numata) ¶ 0004.) A doctor or surgical technician that has been prepped for surgery (i.e., an individual who has "undergone through disinfection") thus cannot remove the equipment from the kit due to the risk of contamination from the packaging. (Ex. 1007 (Numata) ¶ 0004.)

99. The task of removing sterile medical equipment from a kit thus falls to an individual that has not been sterilized (e.g., a nurse). (Ex. 1007 (Numata) ¶ 0004.) But the nurse cannot touch the sterile equipment within the kit. (Ex. 1007 (Numata) ¶ 0004.) Thus, the nurse must remove the sterile equipment with forceps, which is a "cumbersome task." (Ex. 1007 (Numata) ¶ 0004.)

C. The Solution Identified by Numata

100. To solve the problem identified above, the invention of Numata is a medical kit where the medical product inside can be removed "from the packaging bag without touching the product with one's hand." (Ex. 1007 (Numata) ¶ 0019.) Specifically, Numata describes a packing bag made from a "synthetic resin sheet 102" and a "gas-permeable sheet 103" as shown in Figure 2:

(FIG. 2)

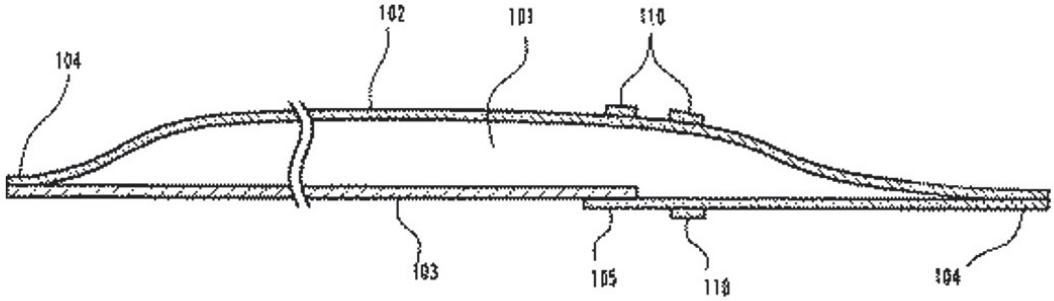

(Ex. 1007 (Numata) ¶¶ 0023-25; Figs 1-3.) The resin sheet is "easy to tear," which allows the pack to be opened by "cutting off a portion" of the resin sheet. (Ex. 1007 (Numata) ¶ 0024.) Further, tape 110 (shown in Figure 1 below) serves as a "cutting guide." (Ex. 1007 (Numata) ¶ 0028.)

(FIG. 1)

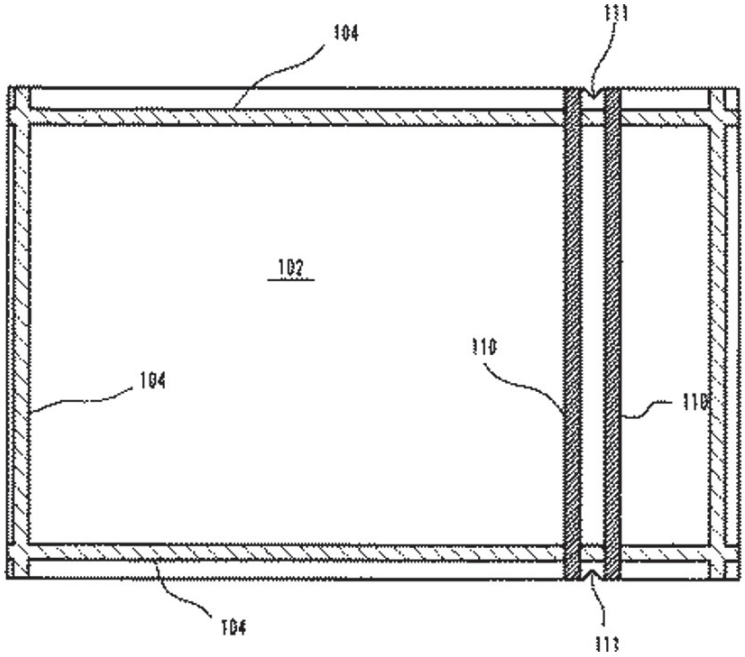

101. As shown in Figure 1 above, tape 110 is "provided along a line connecting two notches (V-shaped incisions) 11." (Ex. 1007 (Numata) ¶ 0028.) This configuration means that "if the user starts tearing the synthetic resin sheet 102 from one of the notches 111, the synthetic resin sheet 102 will be severed along a line predetermined by the tape 110, allowing a large opening to be obtained in the medical product storage pack 100 on the right side in FIGS. 1 to 3." (Ex. 1007 (Numata) ¶ 0028.)

102. Numata's kit also includes a "band 120" that "is wrapped around in the longitudinal direction of the medical product 200," which "serves as a packaging strap." (Ex. 1007 (Numata) ¶ 0028.) The band is shown in Figure 5(c) below:

(c)

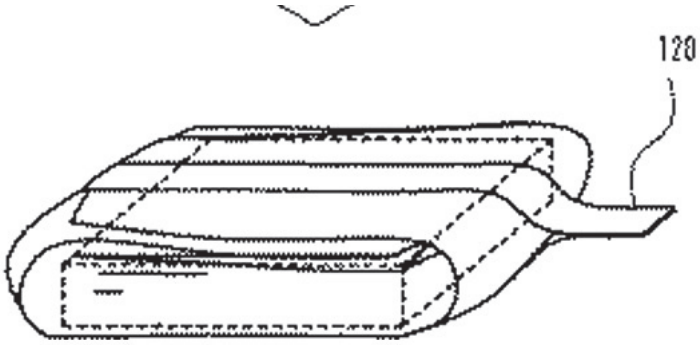

103. When the end of the packaging bag is cut off as described above, "the end of the band 120 is protruding from the opening." (Ex. 1007 (Numata) ¶ 0036.) This is depicted in Figure 7 below:

(FIG. 7)

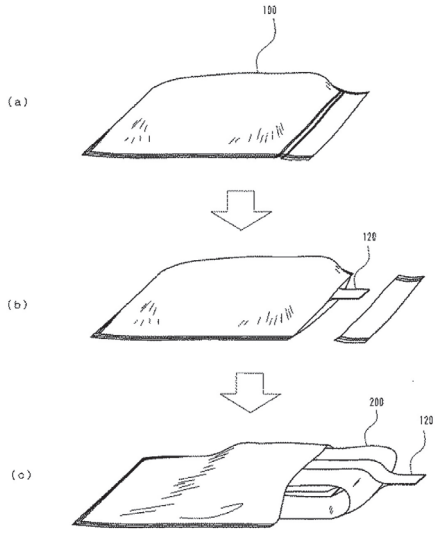

(Ex. 1007 (Numata) ¶ 0036; Fig. 7.)

104. "[P]ulling the band 120" allow for the removal of the medical product 200 (i.e., tray 201 wrapped in cloth 204) "without directly touching the medical product 200 with one's hands." (Ex. 1007 (Numata)¶ 0036.) The band can then be easily separated and taken off. (Ex. 1007 (Numata)¶ 0036.)

105. The invention of Numata thus allows for the removal of the inner medical product (i.e., the wrapped tray) by an individual that has not undergone thorough disinfection procedures without that individual's hands coming in contact with (and thus potentially contaminating) the inner medical product. As Numata explains, having an individual that has undergone thorough disinfection procedures open the kit does not make sense because the outer packaging is not sterile.

D. The Applicability of Numata's Invention to Foley Catheterization Procedures

106. Numata's exemplary embodiment is a kit that includes "medical instruments used for surgery," but "the invention is also applicable to any other medical products, including pharmaceuticals, which are sold sealed within packaging material in a sterilized state." (Ex. 1007 (Numata) ¶ 0037.) A Foley catheter kit is required to be sold in a sterilized state and thus Numata's invention on its face applies to a Foley catheter kit. In fact, a Foley catheter kit includes much of the equipment shown in the exemplary embodiment. Numata states: "Examples of the medical product 200 stored in the storage section 101 include medical instruments that are introduced into the human body, especially into blood vessels, such as catheters and their accessories." (Ex. 1007 (Numata) ¶ 0030 (emphasis added).) A Foley catheter is a medical instrument introduced into the human body. Furthermore, the "accessories" described by Numata including "syringes," "forceps," "cotton," "gloves," and a "drape" are all equipment that is routinely provided in a Foley catheter equipment. A Foley catheter is also a disposable medical instrument consistent with Numata's teaching. (Ex. 1007 (Numata) ¶¶ 0001-2.)

107. Numata also states that disposable medical kits can "reduce the risk of nosocomial infections." (Ex. 1007 (Numata) ¶ 0002.) A nosocomial infection is an infection acquired during the process of receiving health care that was not present

during the time of admission to a healthcare facility. In a hospital setting, these infections are known as hospital-acquired infection or HAIs. The most common nosocomial infection (or HAI) in 2004 was a CAUTI, which most often arises when a Foley catheter is placed in a patient. (Ex. 1027 (CAUTI Guide) at 5.). Like Numata, the '219 Patent also discusses tray features that it alleges "reduce[] the risk of infection for the patient receiving a catheter." (Ex. 1001 ('219 patent) at 8:24-26.)

108. As described above, Numata specifically describes a tray packing system whereby the package can be opened without a non-sterilized individual coming into contact with the inner sterile equipment, which may reduce the risk of nosocomial infections. Given that a CAUTI is an extremely common nosocomial infection, it is my opinion that a person seeking to reduce such infections in and before 2009 would have turned to Numata given its focus on kits that can "reduce the risk of nosocomial infections." Specifically, there would have been a clinical motivation in and before 2009 to equip the kit of Numata with Foley catheter equipment because of the benefits its tray packing system provides for a urinary catheterization procedure. I note that Numata's invention would be applicable in both surgical and non-surgical settings for the reasons laid out below.

1. Surgical Settings

109. Although Numata's invention is not limited to "medical instruments used for surgery," Foley catheters are commonly placed in the operating room, given that sedated patients do not have bladder control. I routinely place Foley catheters in the operating room, and separate from those duties, also routinely perform urological surgical procedures. Thus, I have vast experience in the operating room from which I can assess whether Numata's invention would be useful if the kit of Numata was supplied with Foley catheter equipment.

110. Depending on the circumstances of the procedure, a Foley catheter is placed either *before* a patient has been prepped for surgery (i.e., sterilized) or *after* a patient has been prepped. The kit of Numata supplied with Foley catheter equipment could be used in either circumstance but would be especially useful when a Foley catheter is placed after a patient has already been prepped given the heightened sterility concerns. Surgical equipment is typically placed on a side table next to the operating table. This is also where the Foley catheter equipment is placed. However, as Numata notes, the outside surface of the bag of a sterile medical kit is not itself sterile. (Ex. 1007 (Numata) ¶ 0004.) Thus, the Foley catheter kit cannot be placed onto the table. Instead, the sterile equipment needs to be transferred from the kit onto a sterile surface on top of the operating table. Numata describes this being done in a "cumbersome" manner using forceps. (Ex. 1007 (Numata) ¶ 0004.)

Alternatively, in my experience, the equipment from a Foley catheter kit is simply dumped onto the side table—likely due to the cumbersome and time-consuming nature of trying to remove it via forceps.

111. Regardless of how the equipment is transferred to the side table, it must be removed from the kit given the non-sterile nature of the outside of the kit packaging. But this approach has drawbacks. First, Foley catheterization equipment is typically arranged within the kit in a logical manner by the manufacturer, such as in its order of use. For example, the Serany patent describes "a catheterization package … which provides the convenience of having all the components arranged in logical step-by-step order to facilitate the nurse's or physician's task." (Ex. 1009 (Serany) at 1:31-35.) Removing the equipment from the tray to transfer it to the side table eliminates the manufacturer's intended organization of the equipment.

112. Second, Foley catheter kits are designed such that one or more of the steps of the procedure are done within the sterile surface of the kit. As described in more detail below, the catheter is often lubricated within a compartment of the tray, e.g., in the compartment that holds the lubricant. Additionally, the step of applying a betadine or iodine solution to cotton/rayon balls or swab sticks is also done within a compartment of the tray. For example, Serany describes using the compartment that stores the rayon balls to apply a "cleansing solution" by "pouring it over the rayon balls in their stored position." (Ex. 1009 (Serany) at 2:57-65.) Indeed, this

was a common practice in Foley catheter kits sold many years before and after 2009. The Male Catheter Insertion video on YouTube also shows the same step done in a different Foley catheter kit in 2008. (Ex. 1020 (Catheterization Video) at 2:28-2:43.) I note that the catheter kit shown in the Catheterization Video is one that I personally used to perform hundreds of Foley catheterizations before 2008.

113. When removing the equipment of the tray with forceps (or simply dumping it out), the tray cannot be used to perform the step of lubricating the catheter or applying a cleansing solution to the balls or swabs. Instead, these steps must be performed on the operating table, which is more difficult and messy. A tray provides a smooth, non-absorbing surface to lubricate the catheter. The side table is typically covered with a sterile drape. This material is designed to absorbable and soak up liquid. Thus, it is not an ideal surface on which to lubricate a catheter. I note that Rauschenberger (filed in 1977) describes lubricating a urinary catheter in a lubrication channel within that tray as opposed to the CSR wrap because of the drawbacks of this approach. (Ex. 1021 (Rauschenberger) at 1:16-43; 2:28-42.)

114. Foley catheter trays also contain and hold cotton balls or swabs closely together making it easier to pour the cleansing solution on top of each of the balls or swabs (if they are not presaturated). This step is more challenging to perform on an operating table when the balls or swabs are not grouped closely together.

Additionally, performing these steps within the surface of the tray is less messy because the tray can be discarded after the procedure is completed.

115. In sum, allowing the tray to be placed directly on the side table would make it more convenient to perform a Foley catheterization procedure in the operating room. Numata's invention supplied with Foley catheter equipment allows for this because medical product 200 (i.e., tray 201 wrapped in cloth 204) can be removed "without directly touching the medical product 200 with one's hands." (Ex. 1007 (Numata) ¶ 0033.)

2. Non-surgical settings

116. Numata's invention also would be useful in other settings where Foley catheters are typically placed, such as hospital wards (e.g., obstetrics) and nursing homes. Although Foley catheter kits typically include sterile gloves, it was standard practice in and before 2009 to perform hand hygiene and/or don clean gloves before opening a Foley catheter kit. The reason for this is there is a potential for contamination when performing the steps of the procedure prior to donning sterile gloves, e.g., when unfolding the wrap around the kit and accessing certain equipment within. For example, the Nursing Standard states "Wash Hands. Open the outer packaging of the Foley tray and slide it on to the top of a clean trolley." (Ex. 1019 (Nursing Standard) at 53.) This is consistent with the exemplary instructions in the

’219 patent, which state at step 1a. “Perform hand hygiene. Don non-sterile gloves.” (Ex. 1001 (’219 patent) at Fig. 15.)

117. After performing hand hygiene, the clinician opens the kit. To open the kit, however, the clinician must touch the outside of the Foley catheter kit. Typically, clinicians use their non-dominant hand to grasp the outer bag and their dominant hand to pull the tray from the bag. This is shown in the screenshot from Male Catheter Insertion video below:

(Ex. 1020 (Catheterization Video) at 0:45-49.)

118. Because the outside of the packaging is not sterile, the clinician’s hands may become contaminated when opening the packaging. After the packaging is open and the tray is removed the outer bag, the clinician unfolds the wrap around the tray, again with potentially contaminated hands:

(Ex. 1020 (Catheterization Video) at 0:57-1:08.)

119. Next, the clinician may optionally place an underpad provided in the kit:

(Ex. 1020 (Catheterization Video) at 1:08-1:40.)

120. Finally, the clinician dons sterile gloves:

(Ex. 1020 (Catheterization Video) at 1:45-2:12.)

121. Thus, prior to donning sterile gloves, the clinician interacts with sterile items inside the kit, including the outer wrap and underpad. But there is a possibility the clinician's hands are contaminated when doing so because opening the kit requires touching the outside of the packaging after performing hand hygiene. The clinician tries to be careful not to touch the other items in the tray at this stage, but inadvertent touching may lead to contamination.

122. The kit of Numata supplied with Foley catheter equipment could be opened without the need to touch the inner tray after touching the outer bag. Specifically, the invention of Numata allows the inner wrapped tray to be removed without touching it, which reduces or eliminates one possible vector of contamination. Specifically, the clinician can remove the inner tray from the

package by "pulling the band to remove the medical product 200 inside" and then remove the band without touching the tray: "After removal of the product, the band 120 can be easily separated and taken off by grasping the two ends of the band 120 with one's hands and pulling apart in opposite directions." (Ex. 1007 (Numata) ¶ 0036.) After the kit of Numata has been opened, the clinician could perform hand hygiene and don clean gloves rather than performing such steps before opening the kit. Subsequently, the clinician can interact with the sterile inner medical product such as by opening the wrap provided around the kit.

123. Given that there was a need to reduce nosocomial infections in 2009, including CAUTI, there would have been a motivation to package Foley catheter equipment within the kit of Numata because the use of Numata's packaging invention may reduce the possibility of contamination as outlined above. In sum, it is my opinion that from a clinical perspective there would be motivation to customize the kit of Numata with Foley catheter equipment because such a kit would be advantageous in both surgical and non-surgical settings.

E. Numata's Dimensions

124. I have also considered whether the kit of Numata could accommodate Foley catheter equipment. Numata provides the following dimensions:

Medical product storage pack 100: 600 mm × 850 mm

Synthetic resin sheet 102: 600 mm × 1,000 mm (with 150 mm at the end folded back)

Gas-permeable sheet 103: 600 mm × 700 mm

Band 200: 30 mm × 1,700 mm

(Ex. 1007 (Numata) ¶ 0039.)

125. Although Numata does not provide dimensions for the inner tray, a tray would typically have a slightly smaller length and width than the outer packaging bag. The dimensions of the medical product storage pack are 600mm by 850mm, which corresponds to 23.62 by 33.46 inches. Thus, the tray would roughly be 23 inches by 33 inches in dimension—meaning each compartment (assuming they are divided equally as shown in Figure 4) would be roughly 23 by 16.5 inches. This is ample space to accommodate a closed-system Foley catheter in the right compartment (where Numata already discloses a coiled catheter being stored in the exemplary embodiment shown in Figure 4). Although Foley catheter trays vary in dimensions, any closed-system Foley catheter would fit very comfortably in a compartment that was 23 by 16.5 inches, though the compartment could certainly be made much smaller while still holding the equipment. For example, the ’219 patent teaches a tray with “exemplary dimensions” of ten inches by nine inches. (Ex. 1001 (’219 patent) at 5:15-22.) There is also ample room to store the other equipment of the tray in the left compartment of Numata. As noted above, Numata teaches a tray that accommodates other equipment typically used in a Foley catheterization procedure such as syringes, gloves, drapes, cotton, and forceps, which indicates it

would have sufficient size to accommodate similar equipment provided with a Foley catheter kit.

126. Numata does not provide a tray height. Based on my experience using single layer Foley catheter kits, a tray with a depth of approximately two to three inches would be plenty of room to accommodate Foley catheter equipment. This would be sufficient space to accommodate the closed-system Foley catheter, which as shown in the Male Catheter Insertion video, is typically arranged in a stacked configuration with the coiled tubing on top of the drainage bag and the Foley catheter on top of the tubing. It would also be sufficient depth to accommodate the other items, such as syringes, including in a stacked configuration given their typical diameter.

F. Lubrication Compartment

127. As mentioned above, Foley catheters are most often lubricated within the tray because it provides a non-absorbent, smooth, and sterile surface on which to lubricate the catheter. The precise compartment used to lubricate the catheter depends on the clinician's preferences, but it is commonly done in the same compartment where the lubricant is stored. For example, the Catheterization Video shows the clinician squirt lubricant into the compartment that held the lubricant syringe:

(Ex. 1020 (Catheterization Video) at 2:43-2:49 ("I'm going to squirt my lube into this little container where the syringe was.").) The clinician subsequently dips the catheter into the lubricant disposed in the syringe compartment to lubricate the catheter. (Ex. 1020 (Catheterization Video) at 4:48-4:55.) As noted above, I have personally used the kit shown in this video to perform numerous catheterizations before 2008 and can confirm that the lubricant syringe compartment was commonly used to lubricate the catheter. Specifically, with female patients, I too used this same kit before 2008 and injected lubricant in the same location (i.e., where the lubricant is stored to lubricate the catheter).[4] One reason for this known practice is that clinicians find it convenient to pick up a lubricant syringe and squirt the lubricant

[4] As noted above, with male patients my typical practice is to directly lubricant directly into the urethra.

into the same compartment where the syringe is stored. Another reason is that the diameter of a lubricant syringe is a bit wider than the diameter largest Foley catheter so there is sufficient room to lubricate the catheter as well as sufficient length as a lubricant syringe is approximately six inches. And as a compartment of the Foley catheter tray, it provides a smooth, sterile surface to lubricate the catheter.

128. In addition to the Male Catheter Insertion video, lubrication compartments were common in prior art urinary catheter kit. For example, Beddow teaches the use of compartment 28, which also holds lubricant packet 26, to lubricate the catheter as shown in Figures 1 and 2 below:

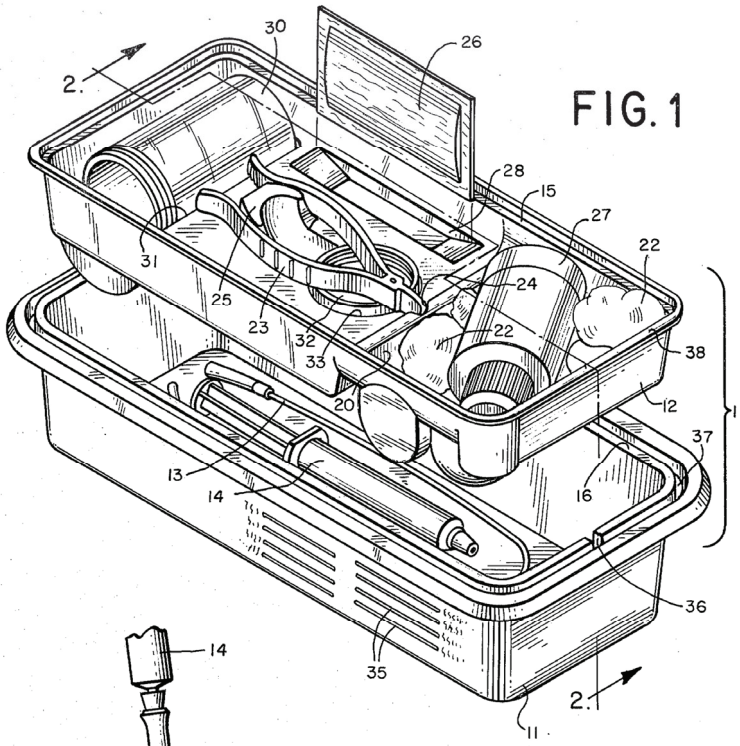

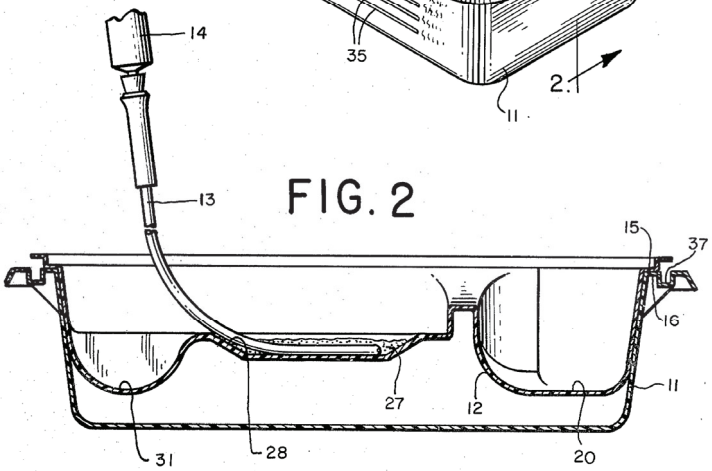

(Ex. 1010 (Beddow) at Figs. 1-2; 3:11-22.)

129. Rauschenberger teaches lubricating the catheter within channel 21 as shown in Figures 1 and 2:

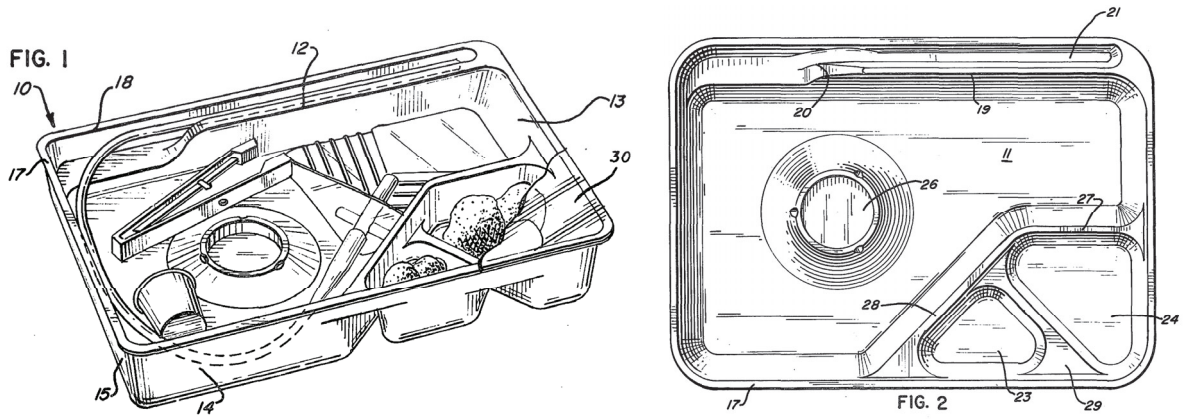

(Ex. 1021 (Rauschenberger) at Figs. 1-2; 2:30-42.)

130. Solazzo teaches the use of lubricating wells 31 and 33 to lubricate the catheter as shown in Figure 1 below:

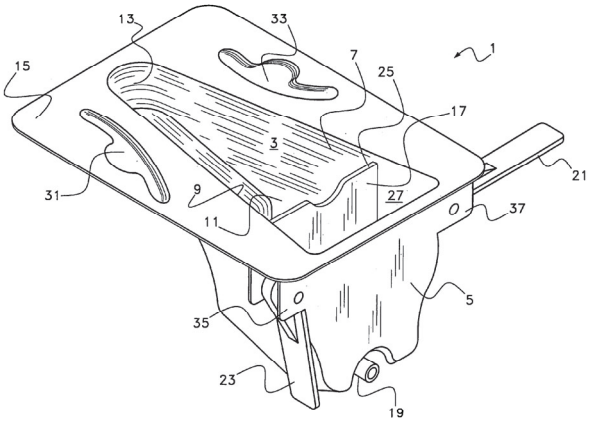

Fig. 1

(Ex. 1005 (Solazzo) at 4:21-25.)

131. Notably, the lubrication compartments in the prior art are of various lengths and depths. For example, Beddow in Figure 2 shows the compartment accommodating the tip of the catheter whereas Rauschenberger in Figure 1 shows a longer section of the catheter in the lubrication compartment. The compartments also have different depths. The lubrication compartment of Beddow appears to have

a depth that is around the same size as the diameter of the catheter. In contrast, the Male Catheter Insertion video shows the catheter lubricated in a syringe compartment, which has a deeper depth to accommodate the larger diameter of a syringe.

132. The prior art trays also vary with respect to their placement of the lubrication compartments. Solazzo places its lubrication wells at the top of its tray. In contrast, Beddow's recess 28 is provided in the middle of the tray as shown in Figure 2 above. (Ex. 1010 (Beddow) at Fig. 2.)

133. The prior art disclosure of lubrication compartments with various lengths and depths is consistent with my experience when lubricating catheters in trays. Any sterile compartment that is easily accessible and facilitates easy transmission of a catheter through lubricating jelly can serve as a lubrication compartment. To facilitate easy transmission, the compartment must have sufficient width and depth to accommodate the diameter of the catheter. The compartment also needs to be able to accommodate the length of the catheter that is lubricated. As discussed below, the portion of the catheter that is lubricated depends on patient's needs as well as clinician's preferences.

134. Many clinicians only lubricate the tip of the catheter (e.g., approximately an inch). I note that the '219 patent describes lubricating the tip of the catheter: "Step 1509 also instructs the health care services provider to pass the

tip of the catheter through the first opening in the wall separating the first compartment and second compartment into the lubricating jelly, thereby lubricating the tip of the catheter." (Ex. 1001 ('219 patent) at 23:6-10 (emphasis added).) Beddow also describes lubricating the tip of the catheter: "After the patient has been prepared, the catheter is lubricated with the lubricating jelly 27 by positioning the catheter tip in the jelly-filled recess 28, as shown in FIG. 2." (Ex. 1010 (Beddow) at 3:18-21.) Thus, my understanding is that a lubricating jelly application compartment must at least have a sufficient length to accommodate at least the tip of the catheter. However, it is preferable from the standpoint of patient comfort to have additional space to allow for the lubrication of longer section of the catheter. Specifically, it is often ideal to lubricate up to five inches of the catheter, which is the maximum length that can be lubricated while still having adequate control of the catheter during the insertion process. Thus, a compartment at least five inches of length is preferable as a lubricating jelly application compartment. I note that some prior art references like Rauschenberger provide for a longer lubrication compartment. The first compartment of Numata easily has space to allow for the lubrication of five inches of the catheter given the provided dimensions, and would also easily accommodate the diameter of the catheter.

135. I note that a filled lubricating jelly syringe typically has a length of approximately six inches. Thus, lubricant that is dispensed into a compartment that

holds the syringe would have sufficient space to lubricate the maximum length of the catheter that is typically lubricated (i.e., five inches). And a compartment that accommodates a lubricant syringe will also necessarily accommodate the diameter of a Foley catheter given that a syringe will have a larger diameter than a Foley catheter. Further, lubricant that is dispensed into such a compartment would pool in the compartment consistent with roughly the length of the catheter that needs to be lubricated. This may help explain the known practice of lubricating the Foley catheter in the lubricant syringe compartment as shown by the Male Catheter Insertion video.

136. To be easily accessible, the compartment should have an open top and be free of major restrictions, e.g., no internal barriers that unduly impede the clinician's hands when lubricating the catheter. For example, Beddow's lubrication compartment is in the middle of the tray and next to the perimeter wall yet it is still easily accessible as the tray has an open top (in use) and there are no impediments to dipping the catheter in a compartment provided in the middle of the tray:

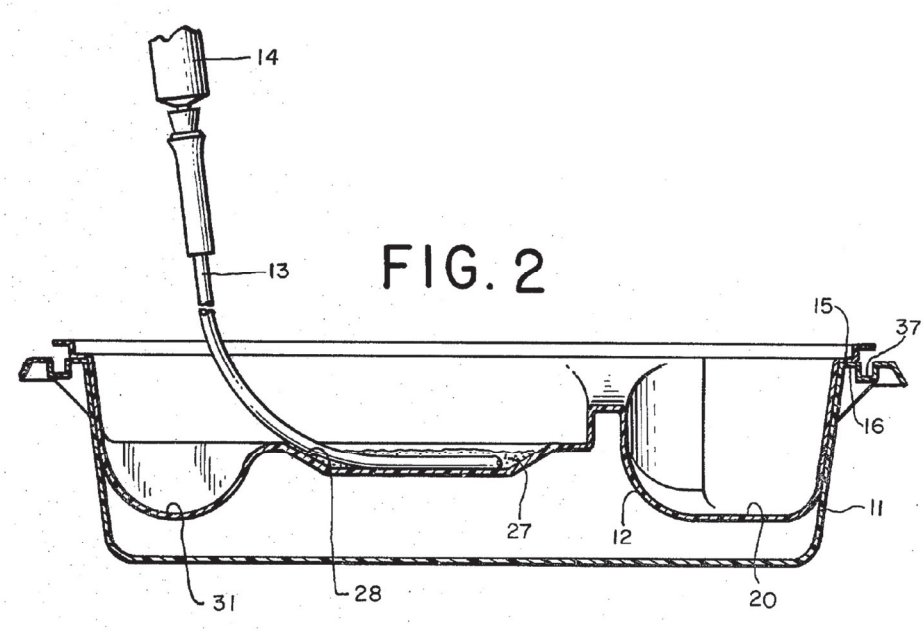

(Ex. 1010 (Beddow) at Fig. 2.)

137. Finally, the tray surface should be non-absorbent and smooth to act as a lubricating jelly application compartment, e.g., made of plastic.

138. A clinician would have understood that the left compartment of Numata that holds the syringes is a lubrication compartment because it is easily accessible and facilitates easy transmission of a catheter through lubricating jelly. First, the compartment is easily accessible. The tray of Numata is a single layer tray and only has two compartments. The compartment has an open top. There is also ample room within the compartment given the provided dimensions for both the catheter and the clinician's hand to fit within the compartment without any restriction from the tray's single barrier. Although Numata does not provide height dimensions for the tray, nothing in Numata, including the depiction of the tray in Figure 4, suggests that the

tray is particularly deep. As discussed above, the tray would likely need to be approximately two to three inches in height to accommodate Foley catheter equipment. This is sufficient depth within which to lubricate a catheter while still making the compartment easily accessible.

139. Second, the left compartment of Numata facilitates easy transmission of the catheter through lubricating jelly after it has been dispensed from a lubricant syringe. The tray is made from "hard plastic," which provides a smooth surface to run the catheter along the bottom of the tray through dispensed lubricating jelly. And given the dimensions of approximately 23 by 17 inches, there is ample room in the left compartment to lubricate up to five inches of the catheter. Finally, the tray of Numata is sterile. (Ex. 1007 (Numata) ¶ 0037.)

140. Third, there would have been a clinical motivation to lubricate the catheter in the left compartment because the lubrication syringe would be stored in that compartment. Again, there was a known practice before 2009 to lubricate the catheter in the compartment where the lubricant syringe was stored as it is convenient to dispense the lubricant in the same place where it is stored and then run the catheter through the pile of dispensed lubricant.

141. Although the left compartment of Numata would serve as a lubricating jelly application compartment without modification, the tray could be improved by adding a recess to the first compartment to accommodate the lubricating jelly syringe

and water syringe (as shown by Serany and Male Catheter Insertion). The depression would prevent movement of the syringes during shipping. Additionally, as noted above, the depression would likely be approximately six inches given typical syringe dimensions, which is very similar to length of the catheter that is ideally lubricated. This would allow the lubricant to pool in a recess corresponding approximately to the length of the catheter that needs to be lubricated. This recess would thus serve as a channel within the first compartment to lubricate the catheter.

VIII. SWAB STICKS

142. A patient's genitals need to be cleaned before inserting a urethral catheter (either a Foley or intermittent catheter). There are two alternative types of equipment provided in urethral catheter kits to perform this step. The first common type of equipment is forceps used with rayon balls or absorbent pads along with an antiseptic solution, such as iodine/betadine. The iodine solution is first poured on the balls/pads and then the user picks up the balls/pads with forceps and cleans the patient with them. This equipment and method is described in Serany, Beddow, and Rauschenberger. (Ex. 1009 (Serany) at 2:57-72; Ex. 1010 (Beddow) at 2:66-3:10; Ex. 1021 (Rauschenberger) at 2:43-57.)

143. The second common type of equipment are swab sticks. The end of the swab stick has an absorbent material (just like the balls/pads of Serany, Beddow, and

Rauschenberger) along with a handle—thus eliminating the need to individually pick up each ball/pad with forceps.

144. Salvadori (filed in 1996) discloses a urinary catheter kit with "swab sticks 60," which would be understood as equipment that is used to clean a patient's genitals. (Ex. 1013 (Salvadori) at Fig. 1; 1:15-16; 3:3-4.) A clinician would further understand Salvadori to disclose pre-saturated swabsticks because Salvadori does not disclose providing a cleansing solution in its kit, and swab sticks without a cleansing solution have no use in a urethral catheterization procedure.[5]

145. Swab sticks were also provided in other urethral catheter kits before 2009, including kits that I used to perform urinary catheterization procedures, such as kits sold by Medline. For example, I understand that Medline submitted a "Medline Urological Better By Design" brochure during the prosecution of Patent Application No. 12/495,148, to which I understand the '219 patent claims priority, in an IDS. (Ex. 1024 (Medline Brochure) at 0005.) The document called "Medline Aritcle[sic.]Brochure" was identified as Non Patent Literature and as being

[5] Similarly, the '219 patent does not expressly state that its swab sticks are pre-saturated, but it is clear from the disclosure that they are pre-saturated with a cleansing material as the '219 patent discloses "At step **1601,** the instructions direct the health care services provider to tear open the swab stick package and to use the swab sticks to clean the patient from the top down." (Ex. 1001 ('219 patent) at 23:18-20.) The swab sticks of the '219 patent could not be used to clean the patient immediately being removed from their package unless they are pre-saturated with a cleansing material. The '219 patent also does not disclose pouring a cleansing solution on the swab sticks.

published in 2008. (Ex. 1024 (Medline Brochure) at 0005.) The brochure describes "Closed System Foley Trays" and states "The Medline Prep Tray includes… Aloetouch 3G latex-free wrapped gloves, **3PVP swabsticks**, underpad, fenestrated drape, prefilled inflation syringe, lubricant syringe, specimen container w/ ID label." (Ex. 1024 (Medline Brochure) at 0015 (emphasis added).)[6] The brochure further discusses the benefits of the "Pre-Saturated Swabsticks" provided in Foley catheter kits:

Pre-Saturated Swabsticks

Swabsticks offer uniform, complete saturation and encourage good technique by keeping hands away from the patient. Swabsticks are wound tightly and pre-saturation assures rayon fibers will not fly through air and settle on patient or catheter.

(Ex. 1024 (Medline Brochure) at 0007.)

146. Swab sticks are interchangeable with balls/pads and forceps as they perform the exact same function in a urethral catheter kit, though swab sticks have certain advantages. Namely, it is easier to grasp a swab stick because of the handle as compared to with forceps where each ball or pad must be picked up individually (and the user could fail if the item is not grasped correctly). Additionally, to the extent they are pre-saturated with a cleansing material, the step of pouring cleansing material can be omitted, which saves time during the procedure.

[6] PVP refers to Povidone-Iodine.

147. I note that Medline has previously argued that Salvadori is incompatible with Solazzo because it is provided in a "rolled package." I disagree. The form of packaging of Salvadori is entirely irrelevant for this combination. The Salvadori reference merely teaches that it was known to include swab sticks in a catheterization kit instead of balls/pads to clean the patient before insertion. That Salvadori happens to teach swab sticks in a "rolled packaged" as opposed to a tray does not change the fact that it was known more than one year before June 2009 to use swab sticks to clean a patient before a catheter insertion as a substitute for balls/pads and forceps. Swab sticks can just as easily be provided in a tray as Salvadori's rolled package as shown by Medline's own Better by Design Catalog.

148. I also note that Medline has previously contended that Salvadori is incompatible with Solazzo because Solazzo includes components for an "intermittent catheterization" procedure. This too is irrelevant. Cleaning of the insertion point prior to catheterization is the same for both Foley catheterization and intermittent catheterization procedures. Specifically, the practitioner uses the included equipment – either cleansing balls/pads or swab sticks – to clean the insertion site before inserting the catheter. Both Foley catheter kits and intermittent kits include either balls/pads or swab sticks. In any event, as discussed above, Solazzo discloses a Foley catheter and thus is not directed to intermittent catheterization.

IX. CONCLUSION

149. This declaration is based on my present assessment of materials and information currently available to me. My investigation and assessment may continue, which may include reviewing documents and other information that may yet be made available to me. Accordingly, I expressly reserve the right to continue my study in connection with this case and to expand or modify my opinions and conclusions as my study continues.

150. I hereby declare that all statements made herein of my own knowledge are true, and that all statements made on information and belief are believed to be true, and that these statements were made with knowledge that willful false statements and the like so made are punishable by fine or imprisonment, or both, under 18 U.S.C. § 1001, and that such willful false statements may jeopardize the petition for *inter partes* review.

Dated:__December 31, 2024__

Dr. Edward Yun

Exhibit A

Edward J. Yun, M.D.

Diplomate of the American Board of Urology

Direct: (949) 438-0801
Email: eyun@UrologicalSurgery.org

Mailing Address: 14271 Jeffrey Road #135, Irvine, CA 92620

EDUCATION

Columbia University College of Physicians & Surgeons — 1994 - 1998
New York, New York
Degree: Doctor of Medicine (M.D.)

University of Michigan — 1990 - 1994
Ann Arbor, Michigan
Degree: Bachelor of Science, Cellular and Molecular Biology

POSTDOCTORAL TRAINING

University of California, San Francisco — 2000 - 2004
San Francisco, California
Resident Physician, Department of Urology

University of California, San Francisco — 1999 - 2000
San Francisco, California
Surgical Resident, Department of General Surgery

University of California, San Francisco — 1998 - 1999
San Francisco, California
Surgical Intern, Department of General Surgery

ACADEMIC APPOINTMENTS & POSITIONS

University of California, Irvine — 2009 -present
Irvine, California
Assistant Clinical Professor, Department of Urology

Urology Center of Southern California — 2004 - present
Corona, California
Attending Urologist

Riverside Community Hospital — 2009 - 2014
Riverside, California
Chair of Urology

Bard Exhibit 1003.0078

ADMINISTRATIVE RESPONSIBILITIES

Medical Board of California		
Expert Reviewer, Urology	Member	2013 - present
Corona Regional Medical Center		
Ethics Committee	Member	2011 - present
Riverside Community Hospital		
Department of Urology	Vice Chair	2015 - 2020
Med Staff Quality Review Committee	Member	2015 - 2020
Department of Urology	Chair	2009 - 2014
Surgical Quality Review Committee	Member	2009 - 2014
Judicial Review Committee	Member	2012 - present
Southwest Healthcare System		
Interdisciplinary Committee	Member	2008 -present

BOARD CERTIFICATION & LICENSURE

Diplomate of the American Board of Urology	2006 - present
California State Department of Health	2004 - present
Fluoroscopy X-Ray Supervisor and Operator	2004 - present
United States Drug Enforcement Administration License	2000 - present
State of California Licensed Physician and Surgeon	2000 - present

ACADEMIC HONORS & AWARDS

Patients' Choice Award, National Listing, MDx Medical	2009-2012
'America's Top Urologists' Consumers' Research Council of America	2009
American Urological Association Gerald P. Murphy Scholar	2004
Society for the Study of Male Reproduction Traveling AUA Fellow	2003
Columbia University College of P&S Dean's Scholarship	1994-1998
National Institutes of Health Biomedical Research Fellowship	1995-1996
University of Michigan Regents/Alumni Scholarship	1990-1994

PROFESSIONAL ORGANIZATIONS

American Urological Association
Western Section, American Urological Association
American Association of Clinical Urologists
Society of Laparoendoscopic Surgeons
California Medical Association
Riverside County Medical Association

Bard Exhibit 1003.0079

BOOK CHAPTERS & PEER-REVIEWED PUBLICATIONS

Yun EJ, Kane CJ. Renal artery infarction and renal vein thrombosis. *Urological Emergencies: A Practical Guide*, Wessells H, McAninch J, Editors. Humana Press, 2005.

Yun EJ, Meng MV, Carroll PR. Evaluation of the patient with hematuria. *The Medical Clinics of North America*, 88(2): 329-343, 2004. Resnick M, Editor.

Yun EJ, Meng MV, Brennan T, Santucci R, Rogers S, McAninch JW. Novel microlaparoscopic technique for peritoneal dialysis catheter placement. *Urology*, 61(5): 1026-1028, May 2003.

Yun EJ, Yeh B, Yabes AP, Coakley F, Kane CJ. Erdheim-Chester Disease: Case report and review of associated urologic, radiologic and histologic features. *Journal of Urology*, 169 (4) 1470-1471, April 2003.

Sawczuk IS, Bagiella E, Sawczuk AT, **Yun EJ**. Clinical application of NMP22 in the management of transitional cell carcinoma of the bladder. *Cancer Detection and Prevention* 24(4): 362-368, 2000.

PEER-REVIEWED ABSTRACTS

Yun EJ, Shiina H, Mitchell J, Kane CJ, Carroll PR. CYP1A1 gene may be responsible for the higher incidence of prostate cancer in African-Americans. AUA Annual Meeting, April 2003.

Ribeiro-Filho L, **Yun EJ**, Shiina H, Deguchi M, Sarkis A, Kane CJ, Carroll, PR. CpG hypermethylation of promoter region inactivates gamma-catenin gene in human bladder cancer. AUA Annual Meeting, April 2003.

Tanaka, Y, **Yun EJ**, Sasaki M, Shiina H, Dahiya R. Polymorphism of codon 10 of estrogen receptor alpha may be a risk factor for prostate cancer. AUA Annual Meeting, April 2003.

Deguchi M, Shiina H, Mitchell J, **Yun EJ**, Shirai M, Kane CJ, Carroll PR, Dahiya R. High frequency of single nucleotide polymorphism on exon 23 of hMSH3 gene in human renal cancer. AUA Annual Meeting, April 2003.

Shirai M, Yamanaka M, Shiina, H, Mitchel J, Deguchi M, **Yun EJ**, Lue TF, Dahiya R. Inactivation of androgen, estrogen and progesterone receptor genes and protein are involved in aging-induced erectile dysfunction. AUA Annual Meeting, April 2003.

Shirai M, Yamanaka M, Shiina, H, Mitchel J, Deguchi M, **Yun EJ**, Lue TF, Dahiya R. Androgen, estrogen and progesterone receptor gene regulation during diabetic erectile dysfunction and insulin treatment. AUA Annual Meeting, April 2003.

Bard Exhibit 1003.0080

Yun E, Meng MV, Stoller ML. Complete Laparoscopic Ileal Conduit: The Video. 78th Annual Meeting of the Western Section American Urological Association, October 2002.

Shiina H, **Yun EJ**, et al. Gamma-catenin statement is regulated by both epigenetic and genetic alteration in human prostate cancer. 78th Annual Meeting of the Western Section American Urological Association, October 2002.

INVITED LECTURES

Diagnosis and Management of Renal and Ureteral Injuries. *University of California, Irvine Department of Urology*, Resident Education Series, Irvine, CA, June 8, 2015.

Physiology of Male Reproduction and Androgen Deficiency in Aging Males. *University of California, Irvine Department of Urology*, Resident Education Series, Irvine, CA, December 20, 2010.

Update on Urinary Incontinence. *Scripps Clinic*, Carmel Valley, CA, September 24, 2009.

Evaluation of the Urologic Patient and the Workup for Hematuria. *University of California, Irvine Department of Urology*, Resident Education Series, Irvine, CA, August 17, 2009.

BPH: It's Impact, Relevance and Management. *California Association for Nurse Practitioners*, Chapter 19, Long Beach, CA, May 13, 2009.

Modern Management of Urinary Incontinence. *Parkview Community Hospital, Founders Center*. Riverside, CA, February 19, 2008.

Advances in the Treatment of Benign Prostatic Hyperplasia. *Hoag Health Center*, Costa Mesa, CA, November 2, 2007.

Diagnosing and Treating Urinary Incontinence. *Anaheim Memorial Hospital Grand Rounds,* Anaheim, CA, June 7 2005.

Living with Prostate Cancer – A Guide for Patients and Their Families. *RMC Prostate Cancer Family Support Group*, Riverside, CA, April 14, 2005.

Bard Exhibit 1003.0081