Trials@uspto.gov
Tel: 571-272-7822

Paper 57
Date: June 3, 2020

UNITED STATES PATENT AND TRADEMARK OFFICE

BEFORE THE PATENT TRIAL AND APPEAL BOARD

C.R. BARD, INC.,
Petitioner,

v.

MEDLINE INDUSTRIES, INC.,
Patent Owner.

IPR2019-00208
Patent 9,808,400 B2

Before JOSIAH C. COCKS, MITCHELL G. WEATHERLY, and TIMOTHY J. GOODSON, *Administrative Patent Judges.*

WEATHERLY, *Administrative Patent Judge*.

JUDGMENT
Final Written Decision
Determining All Challenged Claims Unpatentable
35 U.S.C. § 318(a)

I. INTRODUCTION

A. BACKGROUND

C.R. Bard, Inc. ("Petitioner") filed a petition (Paper 2, "Pet.") to institute an *inter partes* review of claims 13, 14, 16, and 17 (the "challenged claims") of U.S. Patent No. 9,808,400 B2 (Ex. 1001, "the '400 patent").

35 U.S.C. § 311. Medline Industries, Inc. ("Patent Owner") timely filed a Preliminary Response. Paper 12 ("Prelim. Resp."). On June 6, 2019, based on the record before us at the time, we instituted an *inter partes* review of all challenged claims and all grounds advanced by Petitioner. Paper 21 ("Institution Decision" or "Dec."). The table below lists the challenges to the claims:

Claims Challenged	35 U.S.C. §	References
13, 14, 16, 17	103	Solazzo[1], Serany,[2] Boedecker[3]
13, 14, 16, 17	103	Solazzo, Serany, Peterson[4]
13, 14	103	Solazzo, Disston,[5] Boedecker
16, 17	103	Solazzo, Disston, Boedecker, Serany
13, 14, 16, 17	103	Solazzo, Nursing Standard[6]

After we instituted this review, Patent Owner filed a Patent Owner Response in opposition to the Petition. Paper 31 ("PO Resp."). Petitioner filed a Reply in support of the Petition. Paper 42 ("Reply"). Patent Owner filed a Sur-reply. Paper 48 ("Sur-reply"). With our authorization, each party filed a brief addressing a recent decision from our reviewing court, *Fox*

[1] U.S. Patent No. 7,278,987 B2 (Ex. 1005, "Solazzo").

[2] U.S. Patent No. 3,329,261 (Ex. 1006, "Serany").

[3] U.S. Patent No. 3,965,900 (Ex. 1034, "Boedecker").

[4] U.S. Patent No. 4,334,537 (Ex. 1036, "Peterson").

[5] U.S. Patent No. 3,166,189 (Ex. 1008, "Disston").

[6] M. Madeo and A. J. Roodhouse, *Reducing the risks associated with urinary catheters*, NURSING STANDARD, March 25–31, 2009, at 47–55 (Ex. 1025, "Nursing Standard").

Factory, Inc. v. SRAM, LLC, 944 F.3d 1366 (Fed. Cir. 2019). Papers 51, 52. Patent Owner did not move to amend any claim of the '400 patent.

We heard oral argument on March 5, 2020. A transcript of the argument has been entered in the record (Paper 56, "Tr.").

We have jurisdiction under 35 U.S.C. § 6. The evidentiary standard is a preponderance of the evidence. *See* 35 U.S.C. § 316(e); 37 C.F.R. § 42.1(d). This Final Written Decision is issued pursuant to 35 U.S.C. § 318(a) and 37 C.F.R. § 42.73.

For the reasons expressed below, we conclude that Petitioner has demonstrated by a preponderance of evidence that claims 13, 14, 16, and 17 are unpatentable.

B. RELATED PROCEEDINGS

The parties identified as a related proceeding the co-pending district court proceeding of *Medline Industries, Inc. v. C. R. Bard, Inc.*, Case Number 1:17-cv-07216 (N.D. Ill.) ("*Medline III* Litigation"). Pet. 92; Paper 3, 2. The parties collectively also identify as related matters petitions for *inter partes* review of claims of: U.S. Patent 9,745,088 B2 (IPR2019-00035 and IPR2019-00036); U.S. Patent 9,795,761 B2 (IPR2019-00109); and U.S. Patent 9,808,596 B2 (IPR2019-00223). Pet. 92–93; Paper 3, 3. Patent Owner further identifies as a related matter U.S. Patent Application No. 15/804,520, which is a continuation-in-part of the application that issued as the '400 patent. Paper 3, 2. Patent Owner further identifies U.S. Patent Application Nos. 15/703,514; 15/684,787; 15/803,383; 13/374,509; 15/640,224; 14/265,920; and 15/051,964 as related matters because these applications "share similar disclosures and claim language" with the '400 patent. *Id*.

C. THE '400 PATENT

The '400 patent is directed to "storage containers for medical devices, and more particularly to a storage container for a long, flexible medical implement, such as a catheter, and related medical devices." Ex. 1001, 1:21–24. The Specification describes tray 100 shown in Petitioner's annotated and colorized version of Figure 7, which we reproduce below.

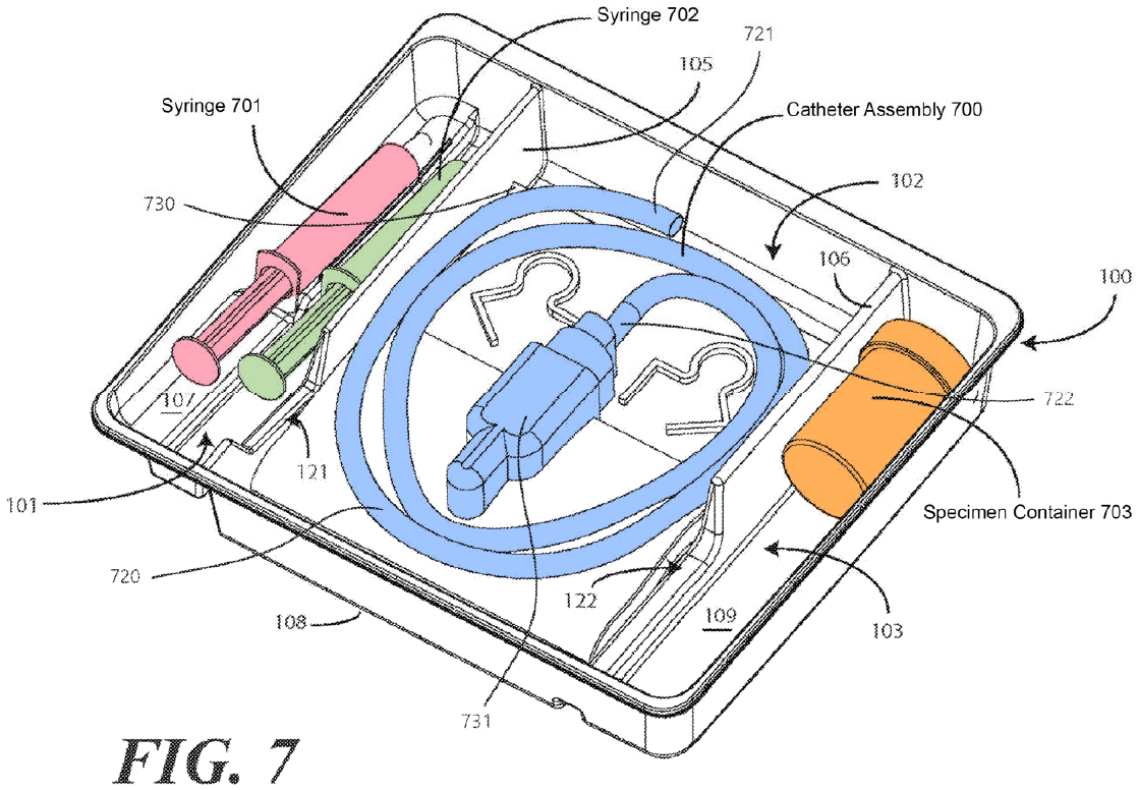

FIG. 7

Figure 7 illustrates catheter assembly 700, two syringes 701, 702, and specimen container 703 located within single-level tray 100. *Id*. at 8:7–15.

Before use, tray 100 is optionally double-wrapped to ensure that components in the tray remain sterile up to and through their initial use with tray 100 being wrapped in CSR wrap 1000 and then outer sterile wrap 1002. *Id*. at 9:39–49, Fig. 10. Tray 100 includes three compartments 101, 102, 103 adapted to accept various items used in a catheterization procedure. *Id*.

at 8:19–25. First compartment 101 accommodates syringes 701, 702 (red, green) containing sterile water or lubricants. *Id*. at 3:26–30, 8:21–23. Second compartment 102 accommodates catheter assembly 700 (blue) comprising indwelling (or Foley) catheter coupled to fluid bag 730 by tube 720. *Id*. at 8:23–27. First end portion 721 of tube 720 is coupled to the indwelling catheter and second end portion 722 of tube 720 is coupled to the fluid bag 730 via anti-reflux device 731. *Id*. at 8:27–30. Third compartment 103 accommodates specimen container 703 for capturing samples taken from the patient via catheter 700. *Id*. at 8:30–32. Additional objects can be included with the tray, including one or more towels, a drape to cover the patient, rubber gloves, hand sanitizing materials, printed instructions, and so forth. *Id*. at 4:54–57.

Claim 13 is the only independent claim among the challenged claims. *Id*. at 11:47–12:7. Claim 13, which is illustrative, recites:

> 13. A kit, comprising:
>
> [a][i] a single level tray including a first compartment base member and a second compartment base member,
>
> [ii] the single level tray defining a first compartment and a second compartment,
>
> [iii] the first compartment base member forming a portion of a boundary of the first compartment, the second compartment base member forming a portion of a boundary of the second compartment,
>
> [iv] the single level tray including a barrier separating the first compartment from the second compartment;
>
> [b] a first syringe disposed within the first compartment of the single level tray, the first syringe containing an inflation fluid;
>
> [c] a second syringe disposed within the single level tray, the second syringe containing a lubricant; and

> [d][i] a catheter assembly including a coiled tube coupling an indwelling catheter to a fluid receptacle, the indwelling catheter including an inflatable portion configured to receive the inflation fluid from the first syringe to maintain the indwelling catheter within a patient,
>
> [ii] the fluid receptacle including an anti-reflux device, an end of the coiled tube coupled to the anti-reflux device,
>
> [iii] the coiled tube and the fluid receptacle disposed within the second compartment of the single level tray with at least a portion of the coiled tube being outside of the fluid receptacle and such that the fluid receptacle is between the second compartment base member and the coiled tube.

Id. at 11:47–12:7 (with line breaks and bracketed labels added to ease discussion).

II. ANALYSIS

A. CLAIM INTERPRETATION

"A claim in an unexpired patent that will not expire before a final written decision is issued shall be given its broadest reasonable construction in light of the specification of the patent in which it appears." 37 C.F.R. § 42.100(b) (2018)[7]; *see also Cuozzo Speed Techs., LLC v. Lee*, 136 S. Ct. 2131, 2144–46 (2016) (affirming that USPTO has statutory authority to construe claims according to Rule 42.100(b)). When applying that standard, we interpret the claim language as it would be understood by one of ordinary

[7] Our recently changed version of this Rule, which requires that we interpret claims in the same manner used in a civil action under 35 U.S.C. § 282(b), does not apply here because the Petition was filed before the effective date of the new Rule, November 13, 2018. *See Changes to the Claim Construction Standard for Interpreting Claims in Trial Proceedings Before the Patent Trial and Appeal Board*, 83 Fed. Reg. 51,340, 51,344 (Oct. 11, 2018).

skill in the art in light of the specification. *In re Suitco Surface, Inc.*, 603 F.3d 1255, 1260 (Fed. Cir. 2010). Thus, we give claim terms their ordinary and customary meaning. *See In re Translogic Tech., Inc.*, 504 F.3d 1249, 1257 (Fed. Cir. 2007) ("The ordinary and customary meaning 'is the meaning that the term would have to a person of ordinary skill in the art in question.'"). Only terms that are in controversy need to be construed, and then only to the extent necessary to resolve the controversy. *Vivid Techs., Inc. v. Am. Sci. & Eng'g, Inc.*, 200 F.3d 795, 803 (Fed. Cir. 1999).

Petitioner recounts interpretations of various terms that Patent Owner proposed during district court litigation and alleges that the prior art meets those limitations. Pet. 23–24. Patent Owner does not address any of these proposed interpretations. *See generally* PO Resp. (not expressly addressing meaning of any claim term).

Accordingly, we discern no reason to expressly interpret any term of the '400 patent.

B. THE PARTIES' POST-INSTITUTION ARGUMENTS

In our Institution Decision, we concluded that the argument and evidence adduced by Petitioner demonstrated a reasonable likelihood that claims 13, 14, 16, and 17 were unpatentable as obvious. Dec. 19–27. We must now determine whether Petitioner has established by a preponderance of the evidence that the specified claims are unpatentable over the cited prior art. 35 U.S.C. § 316(e) (2018). We previously instructed Patent Owner that "any arguments for patentability not raised in the [Patent Owner Response] will be deemed waived." Paper 22, 7; *see also In re Nuvasive, Inc.*, 842 F.3d 1376, 1381 (Fed. Cir. 2016) (holding that patent owner's failure to proffer argument at trial as instructed in scheduling order constitutes waiver).

Additionally, the Board's Trial Practice Guide states that the Patent Owner Response "should identify all the involved claims that are believed to be patentable and state the basis for that belief." Office Patent Trial Practice Guide, 77 Fed. Reg. 48,756, 48,766 (Aug. 14, 2012).

C. LEGAL STANDARDS

Petitioner challenges the patentability of claims 13, 14, 16, and 17 on the grounds that the claims are obvious in light of various references including: Solazzo, Serany, Boedecker, Peterson, Disston, and Nursing Standard. To prevail in its challenges to the patentability of the claims, Petitioner must establish unpatentability by a preponderance of the evidence. 35 U.S.C. § 316(e); 37 C.F.R. § 42.1(d) (2018). "In an [*inter partes* review], the petitioner has the burden from the onset to show with particularity why the patent it challenges is unpatentable." *Harmonic Inc. v. Avid Tech., Inc.*, 815 F.3d 1356, 1363 (Fed. Cir. 2016) (citing 35 U.S.C. § 312(a)(3) (requiring *inter partes* review petitions to identify "with particularity . . . the evidence that supports the grounds for the challenge to each claim")). This burden never shifts to Patent Owner. *See Dynamic Drinkware, LLC v. Nat'l Graphics, Inc.*, 800 F.3d 1375, 1378 (Fed. Cir. 2015) (citing *Tech. Licensing Corp. v. Videotek, Inc.*, 545 F.3d 1316, 1326–27 (Fed. Cir. 2008)) (discussing the burden of proof in *inter partes* review).

The Supreme Court in *KSR International Co. v. Teleflex Inc.*, 550 U.S. 398 (2007), reaffirmed the framework for determining obviousness as set forth in *Graham v. John Deere Co*., 383 U.S. 1 (1966). The *KSR* Court summarized the four factual inquiries set forth in *Graham* that we apply in determining whether a claim is unpatentable as obvious under 35 U.S.C. § 103(a) as follows: (1) determining the scope and content of the prior art,

(2) ascertaining the differences between the prior art and the claims at issue,
(3) resolving the level of ordinary skill in the pertinent art, and
(4) considering objective evidence indicating obviousness or nonobviousness. *KSR*, 550 U.S. at 406 (citing *Graham*, 383 U.S. at 17–18). In an *inter partes* review, Petitioner cannot satisfy its burden of proving obviousness by employing "mere conclusory statements." *In re Magnum Oil Tools Int'l, Ltd.*, 829 F.3d 1364, 1380 (Fed. Cir. 2016). Thus, to prevail Petitioner must explain how the proposed combinations of prior art would have rendered the challenged claims unpatentable. With these standards in mind, we address each challenge below.

D. LEVEL OF ORDINARY SKILL IN THE ART

The parties generally agree that a person having an ordinary level of skill in the relevant art would have a bachelor's degree in packaging engineering, mechanical engineering, or industrial design. Pet. 21–22 (citing Ex. 1002 ¶ 14); PO Resp. 16 (citing Ex. 2040 ¶ 37). Alternatively, such a person could have an engineering degree in another technical field along with about two years of experience designing medical packaging. Pet. 21–22 (citing Ex. 1002 ¶ 14); PO Resp. 16 (citing Ex. 2040 ¶ 37). Neither party contends that a person of ordinary skill needs to be a medical practitioner, but both parties agree that the person of ordinary skill would consult with medical practitioners familiar with catheterization procedures. Pet. 21–22; PO Resp. 16–17 (citing Ex. 2041 ¶ 78).

Although slight differences exist in the formulation of the level of ordinary skill between the parties, we discern no meaningful differences because none of those differences would affect the outcome of our analysis. Accordingly, we apply the level of skill set forth in the preceding paragraph.

E. CLAIMS 13, 14, 16, 17:
OBVIOUSNESS IN VIEW OF SOLAZZO, SERANY, AND BOEDECKER

Petitioner argues that claims 13, 14, 16, and 17 are unpatentable as obvious in view of the combined teachings of Solazzo, Serany, and Boedecker. Pet. 25–57. Claim 13 is the only independent claim among this group of challenged claims. Ex. 1001, 11:47–12:28. Patent Owner argues that the combination of Solazzo, Serany, and Boedecker fails to render independent claim 13, and thus dependent claims 14, 16, and 17, unpatentable as obvious. PO Resp. 17–36. For the reasons expressed below, we determine that Petitioner has demonstrated by a preponderance of evidence that the combined teachings of Solazzo, Serany, and Boedecker render claims 13, 14, 16, and 17 unpatentable as obvious.

1. Overview of the Prior Art

a) Solazzo

Solazzo is directed to an ergonomic, single layer catheterization/irrigation tray 1 having multiple compartments, including recessed area 3, compartment 27, and wells 31, 33 as shown in Figure 1, which we reproduce below right. Ex. 1005, 4:15–25; Fig.1. Solazzo's Figure 1 is a perspective view of the catheterization and irrigation tray illustrating its major features. *Id*. at 3:31–33. Divider wall 17 is optional and, when present, divides recessed area 3 into two compartments, with compartment 27 being

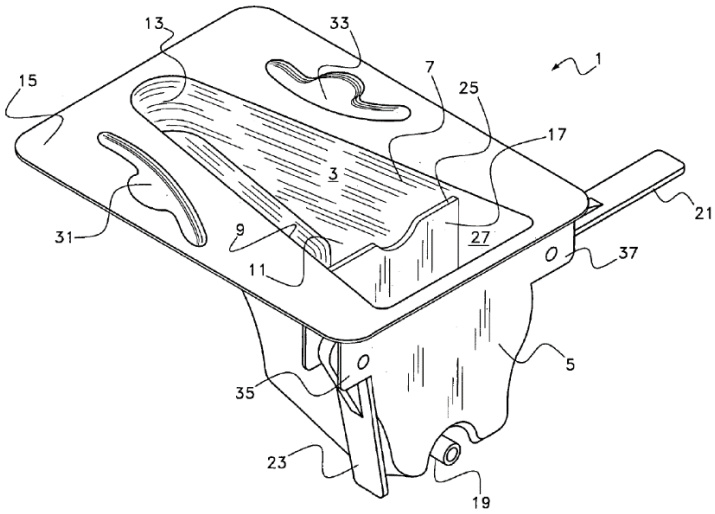

Fig. 1

configured to receive fluid passing over top 25 of wall 17. *Id*. at 4:15–20.

Recessed area 3 is trapezoidal-shaped with a "non constant depth" provided by a terraced bottom 11 having low area 11A and shallow area 11B as shown in Figure 2, reproduced at right. *Id*. at 3:61–66; Fig. 5. Recessed area 3 and compartment 27 store the medical devices of tray kit 100, including Foley catheter 120, urinary tract lubricant 140, surgical gloves 130, inflation syringe 110, irrigation syringe (not shown), evacuation tubing, and antiseptic solutions as shown in Solazzo's Figure 8, which is a top view of kit 100 that we reproduce below. *Id*. at 3:14–24, 4:1–8; Fig. 8.

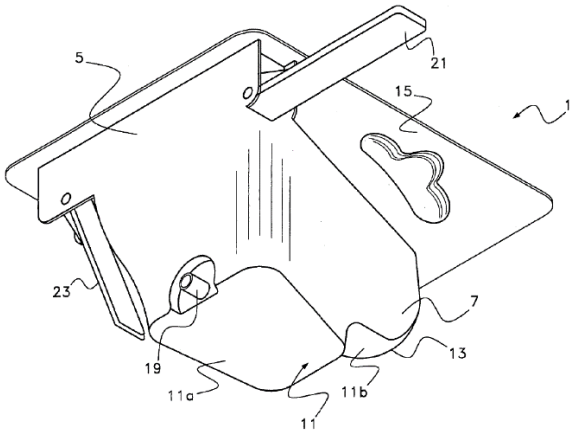

Fig. 2

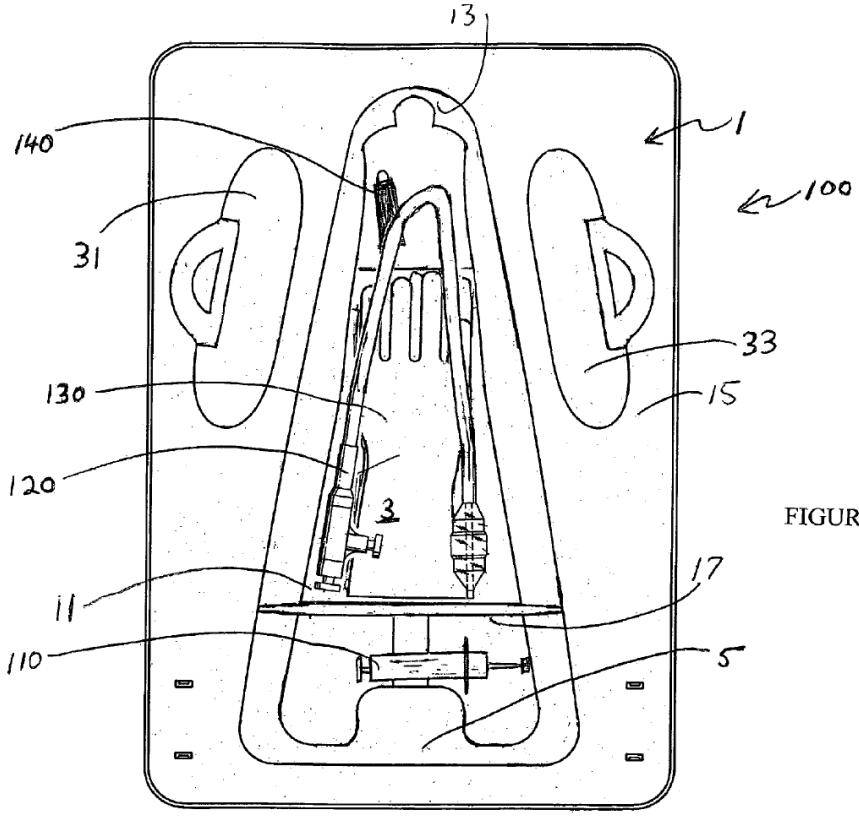

FIGURE 8

> Solazzo's Figure 8 is a top view of kit 100 illustrating various components stored in compartments of tray 1. *Id*. at 4:41–48.

Inflation syringe 110 is stored at low area 11A, and lubricant 140 is stored at shallow area 11B. *Id*. at 4:41–45; Fig. 8.

In use, the recessed area 3 and compartment 27 fit between the legs of a "patient requiring an urological procedure" while flange 15 and wing supports 21, 23 rest atop the legs while the patient is seated. *Id*. at 1:8–12, 3:66–4:10, 4:26, 4:32–33; Fig.1. A surgeon proceeds to "evacuate the bladder of its contents, urine and/or clots" using kit 100, e.g., by wearing the gloves, lubricating and inserting the catheter, and inflating it with inflation syringe 110. *Id*. at 4:32–33, 4:46–48.

b) Serany

Serany is directed to a double-wrapped, sterile package providing catheterization components ready for use in the order needed. Ex. 1006, 1:8–16, 1:60–63, 3:63–4:2; Figs. 1–3, 5. Serany's Figure 5 (reproduced at right in pertinent part) is an exploded view illustrating how various compartments are positioned within Serany's box 10. The package includes multi-compartment single-layer tray 12 mounted on box 10 and enclosed with

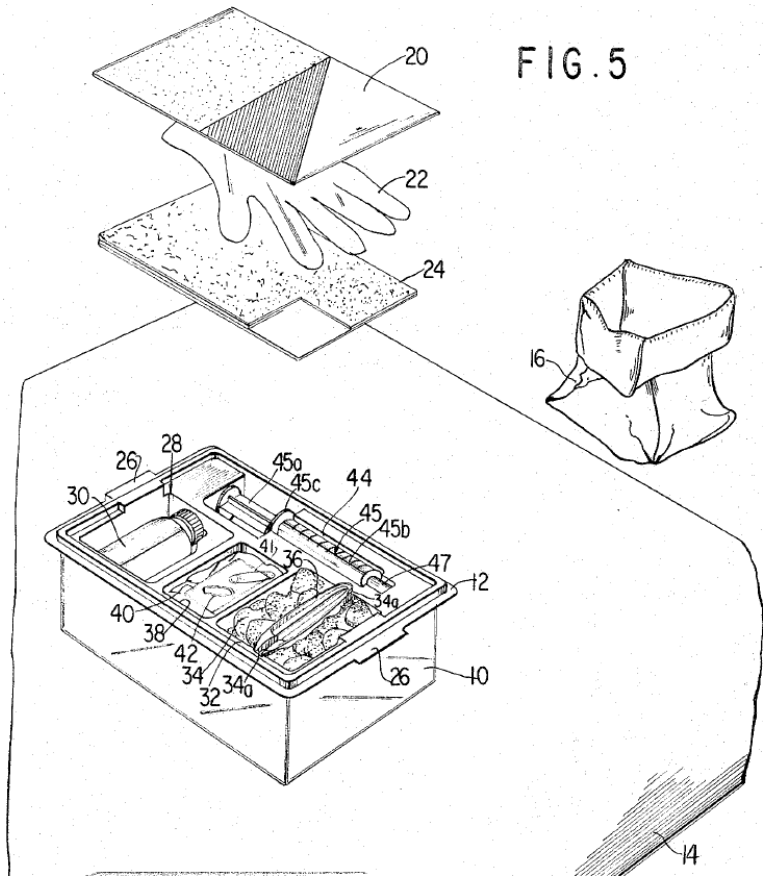

sealed outer envelope 16 and inner wrap 14 that unfolds to provide a sterile field work area. *Id*. at 1:60–72, 2:17–20; Figs. 1–5.

Prefilled syringe 45 of sterile water in depression 44, which includes indentations 44d along the sides to accommodate the syringe's flange. *Id*. at 2:40–41, 3:6–22; Figs. 6–7. Serany's package further includes a waterproof underpad 20, gloves 22, fenestrated drape 24, cleansing solution bottle 30, rayon balls 34, forceps 36, lubricating jelly pouch 40, safety pin 41, and rubber band 42. Serany describes its package as containing "all the essential equipment, . . . for a complete [] catheterization procedure. . . . Everything is available in the proper order of use and in a sterile condition." *Id*. at 1:16–25.

Box 10 also includes Foley catheter 48 that is preconnected to a collapsible drainage bottle 46 via tube 49 and "ready for use" as shown in Serany's Figure 6, which is reproduced at right. *Id*. at 2:22–33, 2:57–70, 3:1–5, 3:23–26, Figs. 5–6. The collapsible drainage "bottle 46 is made of flexible plastic material having fold lines 46a . . . so that it may be folded flat for storage . . . and expanded into cube form when in use. The bottle is shown in FIG. 6 partially expanded for illustration purposes." *Id*. at 3:26–31; Fig. 6. Catheter 48 and tubing 49 are coiled in the box about bottle 46 as shown in Figure 6. *Id*. at 3:33–35.

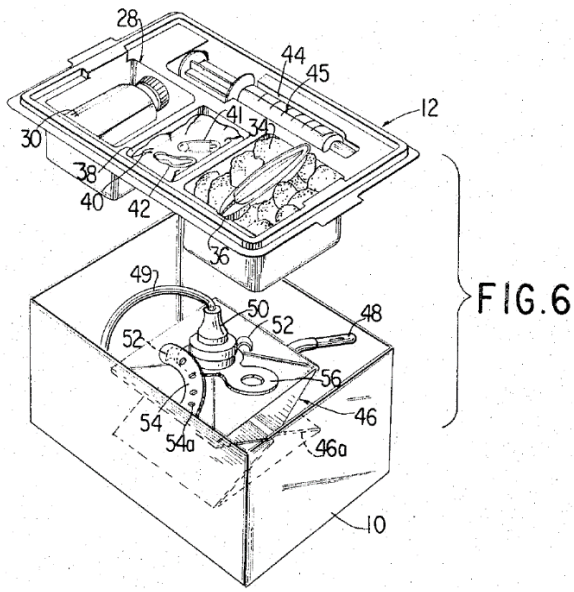

c) Boedecker

Boedecker describes an anti-reflux device for use with a flexible collection receptacle during urinary catheterization. Ex. 1034, 1:5–9, Figures 1–2. The configuration of Boedecker's collection bag 24 is illustrated in Boedecker's Figure 1, which we reproduce at right. Drainage tube 22 is connected to drainage bag 24 via drip chamber 26. Boedecker describes that pressure exerted against the flexible walls of such receptacles may cause urine to back up into the drainage tube, catheter, and patient's bladder, which may cause trauma or retrograde bacterial movement to the bladder. *Id*. at 1:19–35.

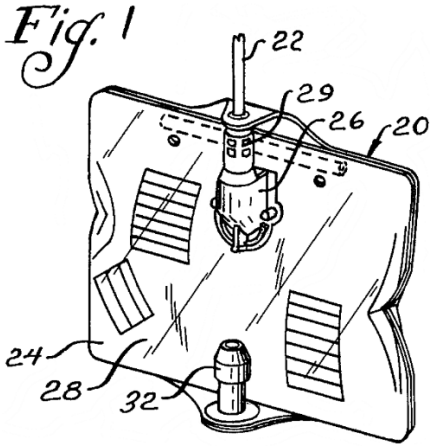

To address this issue, Boedecker's drip chamber 26 includes valve element 34 with lip 36, which is shown in its open position in Boedecker's Figure 5, reproduced at right. *Id*. at 2:54–3:3, 3:20–23; Figures 1–2, 5. When pressure is exerted onto flexible valve element 34 from inside the bag 24 (e.g., by inadvertent squeezing, bumping, tilting of the bag), lip 36 of flexible valve element 34 closes inlet port 30 to prevent reflux. *Id*. at 3:23–33.

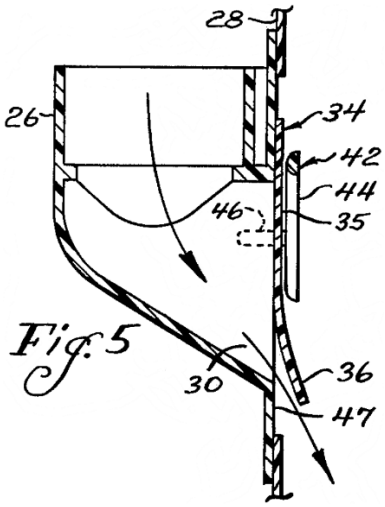

2. Claim 13

a) Petitioner's Argument and Evidence

Petitioner argues that the combined teachings of Solazzo, Serany, and Boedecker render claim 13 unpatentable as obvious. Pet. 25–52. We find Petitioner's arguments and citations to evidence persuasive and adopt them

as our own. For example, Petitioner persuasively demonstrates that Solazzo describes the tray and its compartments (element 13a), *id*. at 33–37 (citing Ex. 1005, 2:61–63, 3:63–66, Figs. 1, 2, 8; Ex. 1002 ¶¶ 139–154), the first and second syringes and the manner in which they are ordered within the tray (elements 13b, 13c), *id*. at 37–40 (citing Ex. 1005, 3:15–24, 4:41–46, Fig. 8; Ex. 1002 ¶¶ 153–163), and a catheter disposed in the second compartment (aspects of element 13d.i), *id*. at 40–42 (citing Ex. 1005, 3:15–24, Fig. 8; Ex. 1003 ¶ 11).

We further find that Petitioner has shown that Serany describes an indwelling catheter coupled to a drainage receptacle (aspects of element 13d.i), *id*. at 42–43 (citing Ex. 1006, 3:23–26, 3:33–35, Fig. 6), between a base member of the second compartment and the coiled tube (element 13d.iii), *id*. at 50 (citing Ex. 1006, 3:26–35, Fig. 6).

Petitioner also persuasively demonstrates that Boedecker describes an anti-reflux device (element 13d.ii) and suggests the use of such a device with Foley catheter systems. *Id*. at 45–48 (citing Ex. 1034, 1:13–17, 1:19–35, 1:45–47, 2:48–52, 3:30–32, Figs. 1, 2; Ex. 1002 ¶¶ 180–185; Ex. 1004, 262 ¶ 41).

Petitioner recognizes that Solazzo does not describe a closed-system Foley catheter in which the catheter is pre-connected to a drainage receptacle. *Id*. at 42. Petitioner persuasively argues, however, that Serany suggests that Solazzo's tray could hold Serany's closed-system Foley catheter, i.e., the claimed "catheter assembly," because an ordinarily skilled artisan would have been motivated to simplify Solazzo's catheterization procedure and reduce the risk of infection. *Id*. at 43–45 (citing Ex. 1006,

1:31–32, 3:23–36; Ex. 1002 ¶¶ 171–174, 390; Ex. 1003 ¶¶ 35, 41, 42; Ex. 1004, 239 ¶ 29; Ex. 1010, 51, 52).

Petitioner also recognizes that neither Solazzo nor Serany expressly describes using an anti-reflux device in a catheter assembly. However, Petitioner persuasively argues that Patent Owner never contested the Office's finding that such devices in catheter systems were well known. *Id*. at 45 (citing Ex.1004, 73–76, 106–08, 262, ¶ 41). Moreover, Petitioner persuasively argues that it would have been obvious to replace Serany's expandable bottle 46 with Boedecker's liquid collection bag 24, which includes an anti-reflux device. *Id*. at 47–48 (citing Ex. 1034, 1:19–35; Ex. 1002 ¶ 185). Petitioner also demonstrates that Boedecker expressly suggests such a modification to reduce infection. *Id*. at 46–48 (citing Ex. 1034, 1:19–35; Ex. 1002 ¶¶ 180–185).

b) Analysis of Patent Owner's Counterarguments

Patent Owner argues that Petitioner's challenge to claim 13 fails for a number of reasons. Patent Owner contends that the prior art fails to describe certain elements of independent claim 13. PO Resp. 22–24, 34–36. Patent Owner also argues that an ordinarily skilled artisan would not have been motivated to combine teachings of Solazzo and Serany as Petitioner posits. *Id*. at 24–34. Patent Owner further argues that objective evidence of non-obviousness strongly weighs against a conclusion that claims 13, 14, 16, and 17 are directed to obvious subject matter. *Id*. at 40–67. We find that none of Patent Owner's arguments overcomes the persuasiveness of Petitioner's positions for the reasons that follow.

(1) Elements 13b and 13c

Patent Owner contends that claim 13 requires "two syringes to be provided in one compartment that is separate from the compartment storing the catheter assembly." PO Resp. 22. We disagree. Claim 13 recites "a first syringe disposed *within the first compartment* . . . containing an inflation fluid" (element 13b) and "a second syringe disposed *within the single level tray* . . . containing a lubricant" (element 13c). Ex. 1001, 11:57–61 (emphases added). Accordingly, it is apparent that the first syringe must be placed in one compartment and the second syringe may be placed anywhere "within the single level tray." Dr. Singh, Patent Owner's expert, agrees. Ex. 1154, 92:20–94:1.

Based upon Patent Owner's incorrect contention that claim 13 requires two syringes in one compartment that differs from the compartment holding a catheter assembly, Patent Owner argues that the combined teachings of Solazzo and Serany fail to describe all elements of claim 13. Petitioner persuasively contends that Solazzo expressly teaches syringe 110 in one compartment and Foley catheter 120 in another compartment of its single layer tray. Reply 2 (citing Ex. 1005, Fig. 8). Petitioner also persuasively points out that Solazzo describes two syringes within its single level tray, an inflation syringe and an irrigation syringe. Pet. 28; Reply 2 (both citing Ex. 1005, 3:14–24). Although Solazzo describes placing lubricant in tube 140 rather than a syringe, Petitioner persuasively argues that an ordinarily skilled artisan would have considered it to be obvious to place the lubricant in a syringe as a known substitute used for a known purpose. Pet. 39–40 (citing Ex. 1002 ¶¶ 160–162). Ms. Chiappetta, Patent

Owner's nurse practitioner expert, testified that her "preference would be a syringe . . . it's easier to get the lubricant out of it." Ex. 1073, 60:23–61:24.

For the reasons expressed above, we determine that Petitioner has demonstrated by a preponderance of evidence that the combined teachings of Solazzo and Serany suggest the inflation and lubrication syringes placed in the tray as required by elements 13b and 13c.

(2) Element 13d.iii

Element 13d.iii refers to the following portion of claim 13: "the coiled tube and the fluid receptacle disposed within the second compartment of the single level tray with at least a portion of the coiled tube being outside of the fluid receptacle and such that the fluid receptacle is between the second compartment base member and the coiled tube." Ex. 1001, 12:1–7.

Petitioner correctly notes that Solazzo describes placing its catheter 120 in recessed area 3 (i.e., the second compartment). Pet. 49 (citing Ex. 1005, Figure 8). Petitioner relies upon Serany's arrangement in which "catheter 48 and drainage tubing 49 connecting it to the bottle 46 are coiled in the box about the bottle." *Id*. at 50 (quoting Ex. 1006, 3:33–35). When stored in this manner, Serany's bottle 46 is folded flat between the bottom of box 10 and tube 49. *Id*. (citing Ex. 1006, 3:26–32). Petitioner argues that Serany suggests arranging the closed-system Foley catheter with the drainage receptacle under the tubing and on the bottom of the tray by indicating that components should be arranged in their "proper order of use." *Id*. at 51 (citing Ex. 1006, 1:9–12, 1:23–25; Ex. 1002 ¶¶ 192–194).

Patent Owner argues that Serany fails to meet element 13.d.iii because Serany's coiled tubing is not disposed "such that the fluid receptacle is between the second compartment base member and the coiled tube." PO

Resp. 34–35. Patent Owner relies upon Serany's Figure 6 and testimony from Dr. Singh to support its position. *Id*. at 35 (citing Ex. 1006, Fig. 6; Ex. 2040 ¶¶ 80–82). Based on his review of Figure 6 and Serany's description of the tubing as "coiled in the box about the bottle," Dr. Singh concludes that Serany illustrates tubing "coiled about, rather than on top of, the drainage bottle." *See, e.g.*, Ex. 2040 ¶ 81. We disagree.

We have reproduced Petitioner's annotated and colorized version of Serany's Figure 6 at right, which is a partially exploded view of Serany's kit illustrating the contents of tray 12 and box 10. Patent Owner's argument presumes that the claim requires that all the tubing is positioned above the bag to meet the requirement that "the fluid receptacle is between the second compartment base member and the coiled tube." However, we read element 13d.iii more broadly to encompass fluid receptacles in which at least part of the receptacle is arranged between the tubing and the second compartment base member. Claim 14, which depends from claim 13 and is thus subsumed within that claim, confirms our reading of claim 13 by reciting that: "the coiled tube and the fluid receptacle are disposed within the second compartment of the single level tray with at least a portion of the fluid receptacle being beneath the coiled tube." Ex. 1001, 12:8–11.

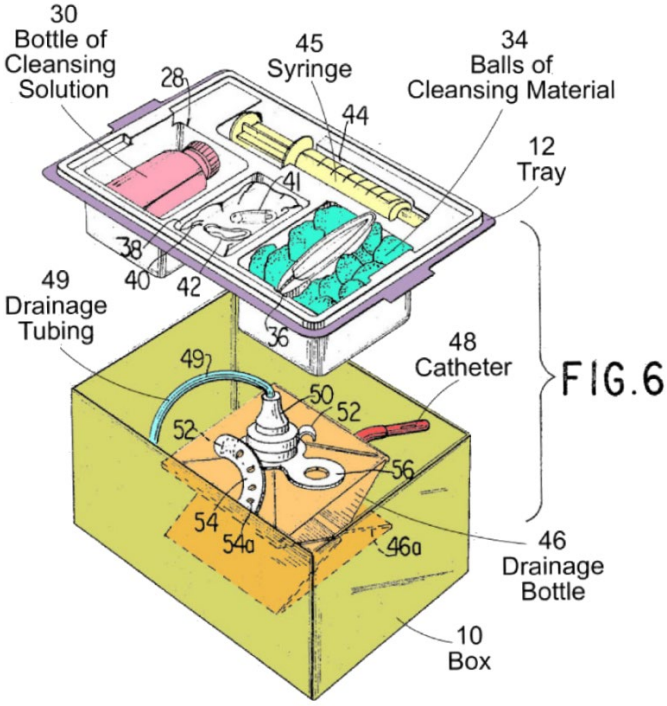

Serany's Figure 6 does not illustrate every part of tubing 49 (blue) extending from fitting 50 on the top of bottle 46 (orange) to catheter 48 (red). However, the figure illustrates a portion of coiled tubing 49 (blue) near its connection to fitting 50, which establishes that at least a portion of bottle 46 (orange) is unambiguously between coiled tubing 49 (blue) and the bottom (i.e., base member) of box 10. Mr. Singh agreed that Serany's tubing 49 is connected to the top of Serany's bottle 46 (i.e., the claimed fluid receptacle). Ex. 1154, 152:12–17. We therefore determine that Petitioner has shown that Serany describes element 13d.iii.

(3) Motivations to Combine Teachings of Solazzo and Serany

Patent Owner argues that an ordinarily skilled artisan would not have been motivated to combine the teachings of Solazzo and Serany for two reasons. As explained below, Petitioner persuasively overcomes both arguments.

First, Patent Owner argues that "fundamental differences" between Solazzo and Serany would counsel against modifying Solazzo to hold Serany's fluid receptacle for its Foley catheter. PO Resp. 24–27. Patent Owner argues that because Solazzo's Foley catheter 120 is an "open design," which is not connected to a fluid receptacle, an ordinarily skilled artisan would not alter Solazzo's catheter into a closed system catheter. *Id*. at 24–25 (citing Ex. 2041 ¶¶ 164, 166–173). The testimony from Ms. Chiappetta, upon which Patent Owner rests, points out that open and closed catheter systems have different uses and that commercial open systems may not have space to accommodate a catheter bag. Ex. 2041 ¶¶ 166–173.

Petitioner argues that an ordinarily skilled artisan would have found it obvious to substitute a closed-catheter as described by Serany for Solazzo's open-catheter 120 and place it in Solazzo's recessed area 3. *Id*. at 43–45. Petitioner contends that an ordinarily skilled artisan would have been motivated to do so because modifying Solazzo to incorporate a "ready for use" closed-catheter system would simplify Solazzo's catheterization procedure and reduce the risk of infection for patients. *Id*. (citing Ex. 1002 ¶¶ 171–173, 390; Ex. 1003 ¶ 35; Ex. 1004, 239 ¶ 29; Ex. 1006, 1:20–23, 3:26; Ex. 1010, 51, 52). Petitioner also contends that including a closed-catheter assembly in Solazzo's kit would render Solazzo's kit more versatile because the modified kit could be used for both permanent catheterization and irrigation procedures. *Id*. at 45 (citing Ex. 1002 ¶ 174; Ex. 1003 ¶¶ 41, 42).

Ms. Chiappetta admits that closed catheter systems are "always better" for reducing the incidence of catheter acquired urinary tract infection ("CAUTI"). Ex. 1073, 81:23–82:9. Accordingly, her testimony supports Petitioner's position that modifying Solazzo's Foley catheter from an open to a closed system (i.e., with the bag described by Serany) would have been desirable to skilled artisans. Therefore, Petitioner persuades us that an ordinarily skilled artisan would have been motivated and have considered it obvious to incorporate the closed catheter concept from Serany into Solazzo's kit.

Second, Patent Owner argues that it would not have been obvious to modify Solazzo's Foley catheter to a closed system because doing so would render Solazzo "inoperable for its intended purpose." PO Resp. 27–34. More specifically, Patent Owner contends that including a bag in Solazzo's

kit would require enlarging Solazzo's tray to such an extent that it could no longer be used between a patient's legs, the allegedly fundamental purpose of Solazzo's design. *Id*. at 28 (citing Ex. 2040 ¶¶ 97–103; Ex. 2041 ¶ 166; Ex. 1005, 1:7–13, 3:9–11, 3:66–4:3).

Petitioner persuasively establishes that the expert testimony relied upon by Patent Owner is inconsistent with testimony elicited on cross examination. Reply 5–7. For example, Dr. Singh testified that Solazzo's tray would accommodate evacuation tubing, which would be three to five feet long. Ex. 1074, 185:17–189:19. Mr. Plishka and Dr. Yun both testified that Solazzo being able to accommodate such a length of tubing would necessarily mean that Solazzo could also accommodate a closed catheter assembly, which would include tubing of three to four feet. Ex. 1070 ¶ 8; Ex. 1071 ¶ 35. Ms. Chiappetta testified that a tapered, open system tray, such as Solazzo's tray, could also accommodate a closed-system Foley catheter. *See* Ex.1073, 162:1–165:5 (contradicting her declaration testimony that a closed Foley catheter does not fit in tapered tray for use between a patient's legs made by Bard).

Even if we were to conclude that a primary purpose of Solazzo's tray were to fit between a patient's legs, Petitioner has shown that placing a closed Foley catheter in such a tray would not have frustrated that purpose. Accordingly, Petitioner persuades us that an ordinarily skilled artisan would have considered it obvious to modify Solazzo's tray to include a drainage bag connected to its Foley catheter (i.e., a closed system).

(4) Objective Indicia

Patent Owner argues that four types of objective indicia of non-obviousness demonstrate that Petitioner's challenges based on Solazzo,

Serany, and Boedecker fail. PO Resp. 40–67. Patent Owner bears the burden of establishing that a nexus exists "between the evidence and the patented invention." *Fox Factory, Inc. v. SRAM, LLC*, 944 F.3d 1366, 1373 (Fed. Cir. 2019). Patent Owner is entitled to a rebuttable presumption of nexus "when the patentee shows that the asserted objective evidence is tied to a specific product and that product 'embodies the claimed features, and is coextensive with them.'" *Id*. (quoting *Polaris Indus., Inc. v. Arctic Cat, Inc.*, 882 F.3d 1056, 1072 (Fed. Cir. 2018) (quoting *Brown & Williamson Tobacco Corp. v. Philip Morris Inc.*, 229 F.3d 1120, 1130 (Fed. Cir. 2000))); *see also Lectrosonics, Inc. v. Zaxcom, Inc.*, IPR2018-01129, Paper 33 at 32 (PTAB Jan. 24, 2020) (Final Written Decision) (precedential). "A patent claim is not coextensive with a product that includes a 'critical' unclaimed feature that is claimed by a different patent and that materially impacts the product's functionality." *Fox Factory*, 944 F.3 at 1375. Nevertheless, even if a patentee fails to demonstrate a presumption of nexus, it may directly establish a nexus between the claimed invention and the objective evidence of non-obviousness. *Id*. at 1378. The patentee bears the burden of directly proving such a nexus. *Id*.

The parties addressed the issue of whether Patent Owner had proven a nexus between the claims and the evidence in their primary briefing. *See, e.g.*, PO Resp.; Reply; Sur-reply. With our prior authorization, each party filed a supplemental brief on how the principles relating to nexus set forth in the *Fox Factory* decision apply to the record in this proceeding. Paper 52 ("Pet. Br."); Paper 51 ("PO. Br."). Based on our review of the record, we determine that Patent Owner has not demonstrated that nexus exists between its claims and its objective evidence of non-obviousness.

Patent Owner argues that because "the '400 patent covers both Medline and Bard's products . . . nexus between Medline's objective evidence and the '400 patent is presumed." Sur-reply 4. Patent Owner further argues that its "objective evidence is tied to the core elements of a single layer tray and elements arranged for ease of use as claimed." *Id*. Patent Owner's experts, upon whom Patent Owner relies, identify two features that establish a nexus between the objective evidence and the claims: the single-layer nature of the tray and the arrangement of items in the tray such as syringes according to their order of use. Ex. 2040 ¶ 146; Ex. 2041 ¶ 125; Ex. 2042 ¶¶ 8, 23. Neither feature provides a basis for a finding that nexus exists between the claims and the objective evidence of non-obviousness for the reasons expressed below.

The first feature allegedly demonstrating nexus, a "single level tray," is indisputably required by independent claim 13, and therefore all challenged claims. Ex. 1001, 11:48. The second feature, the arrangement of syringes in the tray according to their order of use is not required in the challenged claims. Although claim 13 recites "a first syringe disposed within the first compartment of the single level tray," it does not require the second syringe to be placed in the same compartment. Rather, the second syringe need only be "disposed within the single level tray." *Id*. at 11:57–12:7. Therefore, the claim does not require that both syringes be placed in the same compartment. Nor does the claim require that the first and second syringes or any other component are arranged according to an order of use. Accordingly, Patent Owner's argument that nexus exists is premised wholly upon the first feature, the single level tray.

However, single layer trays in catheterization kits were well known in the prior art, for example, as shown by Solazzo. Ex. 1005, Figs. 1, 8. Patent Owner cannot establish nexus by linking objective evidence of non-obviousness to "prior art features in isolation or unclaimed features." *Fox Factory*, 944 F.3 at 1378. Accordingly, Patent Owner's argument that it has proven nexus exists is unpersuasive for at least this reason.

Patent Owner's argument is also unpersuasive because it fails to link the objective evidence to the single level tray. For example, Patent Owner argues that its single level tray met a long felt need to reduce CAUTI. Ms. Chiappetta testifies that because the "design of the tray guides the clinician through the catheterization process" it "reinforces . . . aseptic technique" to reduce the incidence of CAUTI. Ex. 2041 ¶ 125, 128. To support her conclusion that single level trays reduce the incidence of CAUTIs, Ms. Chiappetta cites anecdotal reports from three hospitals that used Patent Owner's commercial ERASE CAUTI trays and reported reduced incidence of CAUTIs. *Id.* ¶¶ 131–135 (citing Ex. 2049; Ex. 2050; Exs. 2057–2059).

Petitioner persuasively points out that the underlying evidence from these three hospitals fails to support Patent Owner's claims because (1) the hospital did not report infection rates at all (Ex. 2057, 4), (2) Patent Owner cherry-picked data in a manner that distorted the outcome (Ex. 2058, 7; Ex. 1087, 2), and (3) the data reflected a reduction in infection rates that mostly occurred before the hospital bought trays from Patent Owner (Ex. 1085, 15). Reply 22–24. Petitioner also persuasively discredits Ms. Chiappetta's testimony that CAUTI rates declined in 2015–2016 because single level trays "had time to gain traction in the market," Ex. 2041

¶ 73, because she was unaware that the apparent reduction in infection rates largely reflected a change in the definition of CAUTI in 2015 to exclude yeast infections, Ex. 1073, 209:9–22, 211:6–20; Ex. 1121. Reply 24. Finally, Petitioner persuasively demonstrates that CAUTI rates declined steadily before single level trays gained market share and thus decreased for reasons unrelated to the claimed tray. *Id*. at 25 (citing Ex. 1122, 5; Ex. 1073, 218:7–14). Based on the entire record, we conclude that Patent Owner fails to establish that single level trays reduced CAUTI rates rather than other factors identified by Petitioner.

For the reasons expressed above, we determine that Patent Owner has not established either a presumed nexus or nexus in fact between the claimed subject matter and the objective evidence of non-obviousness. Accordingly, we do not consider the objective evidence presented to weigh against Petitioner's challenges that claims 13, 14, 16, and 17 are obvious.

c) Conclusion

For the reasons expressed above, we conclude that Petitioner has proven by a preponderance of evidence that the combined teachings of Solazzo, Serany, and Boedecker render independent claim 13 unpatentable as obvious.

3. Dependent Claim 14

Claim 14 depends directly from claim 13 and further recites that: "the coiled tube and the fluid receptacle are disposed within the second compartment of the single level tray with at least a portion of the fluid receptacle being beneath the coiled tube." Ex. 1001, 12:8–11. Petitioner relies upon the same aspects of Solazzo and Serany as describing the limitations introduced in claim 14 as it marshalled for demonstrating that the

prior art described element 13d.iii. Patent Owner does not separately address dependent claim 14. *See* PO Resp. 17–36, 40–67 (addressing only independent claim 13). For the same reasons expressed in Parts II.E.2 above, we conclude that Petitioner has demonstrated by a preponderance of evidence that the combined teachings of Solazzo, Serany, and Boedecker render claim 14 unpatentable as obvious.

4. Dependent Claim 16

Claim 16 depends directly from claim 13 and further recites that: "[a] the single level tray defines a top opening through which the first compartment and the second compartment can be accessed, [b] the kit further comprising: a sterile wrap disposed about the single level tray covering at least the top opening." Ex. 1001, 12:19–24 (with labels added for discussion purposes). Petitioner relies upon Solazzo as describing element 16a. Pet. 52–53 (citing Ex. 1005, Fig. 1; Ex. 1002 ¶¶ 199–202). Petitioner relies upon a combination of Solazzo and Serany and testimony by Mr. Plishka to demonstrate that the combination describes and suggests element 16b. *Id*. at 53–55 (citing Ex. 1005, 3:15–24; Ex. 1006, 1:13–16, 1:60–63, 2:1–20, Fig. 3; Ex. 1002 ¶¶ 203–213). Patent Owner does not separately address dependent claim 14. *See* PO Resp. 17–36, 40–67 (addressing only independent claim 13). Based on our review of the argument and evidence submitted by Petitioner, which we adopt as our own, we conclude that Petitioner has demonstrated by a preponderance of evidence that the combined teachings of Solazzo, Serany, and Boedecker render claim 16 unpatentable as obvious.

5. Dependent Claim 17

Claim 17 depends directly from claim 16 and further recites that: "when the sterile wrap is unwrapped from about the top opening at least the first syringe, the second syringe, and the indwelling catheter are revealed." Ex. 1001, 12:25–28. Petitioner relies upon a combination of Solazzo and Serany and testimony by Mr. Plishka to demonstrate that the combination describes and suggests the limitations introduced in claim 17. Pet. 56–57 (cross-referencing discussion of claim 16 and citing Ex. 1002 ¶¶ 214–219). Patent Owner does not separately address dependent claim 17. *See* PO Resp. 17–36, 40–67 (addressing only independent claim 13). Based on our review of the argument and evidence submitted by Petitioner, which we adopt as our own, we conclude that Petitioner has demonstrated by a preponderance of evidence that the combined teachings of Solazzo, Serany, and Boedecker render claim 17 unpatentable as obvious.

6. Conclusion

For the reasons expressed above, we conclude that Petitioner has demonstrated by a preponderance of evidence that the combined teachings of Solazzo, Serany, and Boedecker render claims 13, 14, 16, and 17 unpatentable as obvious.

F. CLAIMS 13, 14, 16, AND 17:
OBVIOUSNESS IN VIEW OF SOLAZZO, SERANY, AND PETERSON

Petitioner's challenge to claims 13, 14, 16, and 17 based on the combined teachings of Solazzo, Serany, and Peterson rests upon substantially the same argument and evidence as the challenge discussed in Part II.E above. However, Petitioner relies upon Peterson rather than Boedecker as describing the "anti-reflux device" recited in element 13d.ii

and testimony by Mr. Plishka for establishing why an ordinarily skilled artisan would have considered it obvious to incorporate Peterson's anti-reflux device into a catheterization kit. Pet. 57–65 (cross-referencing argument and evidence relating to Solazzo and Serany and citing Ex. 1036, 1:66–68, 2:46–67, 3:29–39, Figs. 1–4; Ex. 1002 ¶¶ 231–235).

Patent Owner addresses the challenge to claims 13, 14, 16, and 17 based upon Solazzo, Serany, and Peterson in the same way as it addresses the challenge to those claims based upon Solazzo, Serany, and Boedecker. PO Resp. 17–36, 40–67. Namely, Patent Owner argues that the combined teachings of Solazzo and Serany are insufficient to establish obvious without addressing whether Peterson or Boedecker describe the anti-reflux device of element 13d.ii. *See id*.

For the reasons expressed in Part II.E above and for the reasons set forth by Petitioner explaining why Peterson describes and suggests incorporating an anti-reflux device into a catheter kit, which we adopt as our own, we conclude that Petitioner has demonstrated by a preponderance of evidence that the combined teachings of Solazzo, Serany, and Peterson render claims 13, 14, 16, and 17 unpatentable as obvious.

G. Claims 13 and 14: Obviousness in View of Solazzo, Disston, and Boedecker

Petitioner's challenge based on Solazzo, Disston, and Boedecker relies upon the same portions of Solazzo and Boedecker as the challenge analyzed in Part II.E above ("Ground 1"). Pet. 67–74 (cross-referencing arguments for "Ground 1.") Petitioner substitutes Disston for Serany as describing the closed system Foley catheter (element 13d.i) and the physical arrangement between the coiled tubing and the fluid receptacle (element 13d.iii). *Id*. at 68–71 (element 13d.i), 74–78 (element 13d.iii). For the

reasons that follow, we conclude that Petitioner has failed to prove by a preponderance of evidence that the combined teachings of Solazzo, Disston, and Boedecker describe element 13d.iii.

Disston relates to a single-level, wrapped catheterization tray package that "provide[s] for the first time a complete, properly organized, conveniently arranged, sterile set of equipment for catheterization, the entire drainage system being pre-assembled." Ex.1008, 2:59–67, Fig. 2. Disston's single-level tray 2 contains catheterization devices "arranged in such order and position as to be most conveniently available when the container is opened." *Id*. at 2:15–23. Disston's package includes "a pre-assembled catheter-drainage tube-drip chamber-drainage bag," *id*. at 1:33–34, including a Foley catheter 7, drainage tube 8, drip chamber 9, drainage bag 10, with "suitable adapters being interposed, if necessary, between the catheter and tube and/or between the drip chamber and bag," *id*. at 2:15–23, Fig. 1.

Based on our review of Disston, we determine that Petitioner fails to prove by a preponderance of evidence that Disston describes element 13d.iii. Essentially, Disston fails to describe a coiled tube "such that the fluid receptacle is between the second compartment base member and the coiled tube." Petitioner relies upon Disston's Figure 1, reproduced below, as illustrating the claimed arrangement for element 13d.iii.

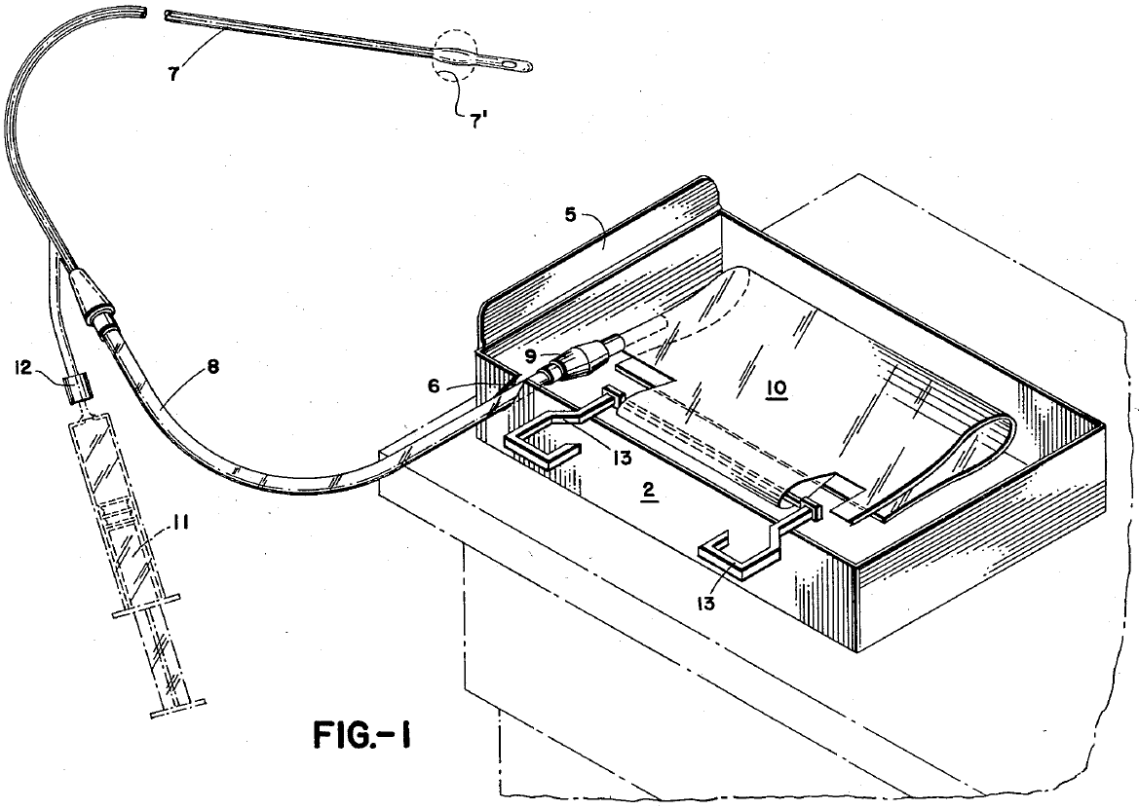

> Disston's Figure 1 is "a perspective view of the catheter-to bag assembly, extended in condition for use with the bag temporarily left in the tray portion of the container from which the sleeve portion has been removed." Ex. 1008, 1:49–52.

Figure 1 illustrates Disston's catheter assembly "extended in condition for use" but not as arranged before the package is opened. *Id.*; Tr. 59:23–60:9. None of Disston's other figures illustrates the contents of Disston's container before opening. *See id*. Figures 2–4 (failing to illustrate any contents of Disston's container). In the "condition for use" shown in Figure 2, we are unsure of how catheter 7, drainage tube 8, and drainage bag 10 are arranged inside the compartment of tray 2. Petitioner cites Disston's statement that items are "arranged in such order and position as to be most conveniently available when the container is opened" as proving that bag 10 is "between the second compartment base member and the coiled

tube" as recited in element 13d.iii. Pet. 75 (citing Ex. 1008, 2:15–23). This portion of Disston fails, however, to prove by a preponderance of evidence that Disston's tubing is coiled as recited in element 13d.iii. Rather, Disston merely generally states that the items are arranged "to be most conveniently available when the container is opened." Petitioner's citation to Mr. Plishka's testimony is also unavailing because Mr. Plishka relies on the same portion of Disston to opine that "the drainage bag of Disston is designed to fit in the bottom of a catheter tray, and the coiled tube *can be* placed on top of or wrapped around the drainage receptacle." *Id*. at 76–77 (citing Ex. 1002 ¶ 278–283 (emphasis added)). Mr. Plishka opines about how items "can be" placed in Disston's tray, but he cites no persuasive evidence that Disston did arrange tubing and a fluid receptacle as required in element 13d.iii. Based on our careful review of Disston, it is simply too ambiguous on this point to prove by a preponderance of evidence that it describes element 13d.iii.

Without persuasive evidence that the combined teachings of Solazzo, Disston, and Boedecker described element 13d.iii, Petitioner's argument that independent claim 13 is unpatentable as obvious fails.

H. Claims 16 and 17: Obviousness in View of Solazzo, Disston, Boedecker, and Serany

Claims 16 and 17 depend ultimately from claim 13. Ex. 1001, 12:19–28. Although Petitioner cites Serany as part of the prior art that renders claims 16 and 17 unpatentable as obvious, Petitioner does not rely upon Serany as describing element 13d.iii of independent base claim 13. Pet. 78–79. Accordingly, Petitioner's challenge to dependent claims 16 and 17 based upon the combined teachings of Solazzo, Disston, Boedecker, and Serany fails for the same reasons discussed in Part II.F above.

I. CLAIMS 13, 14, 16, AND 17: OBVIOUSNESS IN VIEW OF SOLAZZO AND NURSING STANDARD

Petitioner's challenge based on Solazzo and Nursing Standard relies upon the same portions of Solazzo as the challenge analyzed in Part II.E above ("Ground 1"). Pet. 81–87 (cross-referencing arguments for "Ground 1.") Petitioner relies upon Nursing Standard as suggesting a closed system Foley catheter (element 13d.i), the incorporation of an anti-reflux device in the catheter (element 13d.ii), and the physical arrangement between the coiled tubing and the fluid receptacle (element 13d.iii). *Id*. at 82–84 (element 13d.i), 84–85 (element 13d.ii), 85–87 (element 13d.iii). For the reasons that follow, we conclude that Petitioner has failed to prove by a preponderance of evidence that the combined teachings of Solazzo and Nursing Standard describe or suggest element 13d.iii.

Petitioner first argues that arranging "items inside a catheter tray in their order of use" was "well-known in the art" and references its discussion of the grounds that we analyze in Parts II.E and II.F above. Pet. 86. However, we find that Petitioner's discussion of other grounds that rely on Serany, Boedecker, and Peterson as secondary references fails to apply in the context of Petitioner's challenge based on Solazzo and Nursing Standard. Accordingly, Petitioner's cross-reference to other grounds is unpersuasive in the context of the challenge based solely upon Solazzo and Nursing Standard.

Petitioner also contends that "a healthcare provider would need access to the drainage tubing before a fluid receptacle because it is attached to the Foley catheter. (Ex.1002, ¶316.) Accordingly, it would have been obvious to arrange a closed-system Foley catheter in the tray of Solazzo" as recited in element 13d.iii. *Id*. at 86–87. The only evidence cited to support this

contention is testimony by Mr. Plishka, *id*. at 87 (citing Ex. 1002 ¶ 316), who merely parrots the conclusion reached by Petitioner without citing any objective evidence or explaining how either Solazzo or Nursing Standard describes element 13d.iii. Ex. 1002 ¶ 316. Patent Owner correctly points out that Nursing Standard "provides no structural disclosure for a catheterization tray." PO Resp. 39 (citing Ex. 2040 ¶¶ 88, 95).

Without persuasive evidence that the combined teachings of Solazzo and Nursing Standard described or suggested element 13d.iii, Petitioner's argument that independent claim 13 is unpatentable as obvious fails. Accordingly, we determine that Petitioner has failed to carry its burden of proving that the combined teachings of Solazzo and Nursing Standard render independent claim 13 or its dependent claims 14, 16, and 17 unpatentable as obvious.

III. CONCLUSION[8]

Claims	35 U.S.C. §	References	Claims Shown Unpatentable	Claims Not Shown Unpatentable
13, 14, 16, 17	103	Solazzo, Serany, Boedecker	13, 14, 16, 17	

[8] Should Patent Owner wish to pursue amendment of the challenged claims in a reissue or reexamination proceeding subsequent to the issuance of this decision, we draw Patent Owner's attention to the April 2019 *Notice Regarding Options for Amendments by Patent Owner Through Reissue or Reexamination During a Pending AIA Trial Proceeding*. *See* 84 Fed. Reg. 16,654 (Apr. 22, 2019). If Patent Owner chooses to file a reissue application or a request for reexamination of the challenged patent, we remind Patent Owner of its continuing obligation to notify the Board of any such related matters in updated mandatory notices. *See* 37 C.F.R. §§ 42.8(a)(3), (b)(2).

Claims	35 U.S.C. §	References	Claims Shown Unpatentable	Claims Not Shown Unpatentable
13, 14, 16, 17	103	Solazzo, Serany, Peterson	13, 14, 16, 17	
13, 14	103	Solazzo, Disston, Boedecker		13, 14
16, 17	103	Solazzo, Disston, Boedecker, Serany		16, 17
13, 14, 16, 17	103	Solazzo, Nursing Standard		13, 14, 16, 17
		Overall Outcome	13, 14, 16, 17	

IV. ORDER

For the reasons given, it is:

ORDERED, Petitioner has established based on a preponderance of evidence that claims 13, 14, 16, and 17 of U.S. Patent 9,808,400 B2 are unpatentable as obvious under 35 U.S.C. § 103; and

FURTHER ORDERED because this is a final written decision, the parties to this proceeding seeking judicial review of our Decision must comply with the notice and service requirements of 37 C.F.R. § 90.2.

For PETITIONER:

Mehran Arjomand
Cong Luo
MORRISON & FOERSTER LLP
marjomand@mofo.com
cluo@mofo.com

For PATENT OWNER:

Nicholas T. Peters
Paul B. Henkelmann
Allen E. Hoover
FITCH, EVEN, TABIN & FLANNERY LLP
NtPete@fitcheven.com
PHenkelmann@fitcheven.com
AHoover@fitcheven.com

Jeffrey P. Kushan
SIDLEY AUSTIN LLP
jkushan@sidley.com