DocCode – SCORE

SCORE Placeholder Sheet for IFW Content

Application Number: 16944667 Document Date: 07/31/2020

The presence of this form in the IFW record indicates that the following document type was received in electronic format on the date identified above. This content is stored in the SCORE database.

Since this was an electronic submission, there is no physical artifact folder, no artifact folder is recorded in PALM, and no paper documents or physical media exist. The TIFF images in the IFW record were created from the original documents that are stored in SCORE.

- Drawing

At the time of document entry (noted above):

- USPTO employees may access SCORE content via DAV or via the SCORE web page.
- External customers may access SCORE content via PAIR using the Supplemental Content tab.

Form Revision Date: March 1, 2019

PTO/SB/17 (01-18)
Approved for use through 11/30/2020. OMB 0651-0032
U.S. Patent and Trademark Office; U.S. DEPARTMENT OF COMMERCE
Under the Paperwork Reduction Act of 1995 no persons are required to respond to a collection of information unless it displays a valid OMB control number

FEE TRANSMITTAL

Complete if known	
Application Number	
Filing Date	
First Named Inventor	Jennifer Tomes
Examiner Name	
Art Unit	
Practitioner Docket No.	10055UCIP2D1C1C1C1C1C1

☐ Applicant asserts small entity status. See 37 CFR 1.27.

☐ Applicant certifies micro entity status. See 37 CFR 1.29. Form PTO/SB/15A or B or equivalent must either be enclosed or have been submitted previously.

TOTAL AMOUNT OF PAYMENT ($)

METHOD OF PAYMENT (check all that apply)

☐ Check ■ Credit Card ☐ Money Order ☐ None ☐ Other (please identify): _____

■ Deposit Account Deposit Account Number: 503608 Deposit Account Name: Burrus Intellectual Prop…

For the above-identified deposit account, the Director is hereby authorized to (check all that apply):

☐ Charge fee(s) indicated below ☐ Charge fee(s) indicated below, **except for the filing fee**

■ Charge any additional fee(s) or underpayment of fee(s) under 37 CFR 1.16 and 1.17 ☐ Credit any overpayment of fee(s)

WARNING: Information on this form may become public. Credit card information should not be included on this form. Provide credit card information and authorization on PTO-2038.

FEE CALCULATION

1. BASIC FILING, SEARCH, AND EXAMINATION FEES (U = undiscounted fee; S = small entity fee; M = micro entity fee)

	FILING FEES			SEARCH FEES			EXAMINATION FEES			
Application Type	**U ($)**	**S ($)**	**M ($)**	**U ($)**	**S ($)**	**M ($)**	**U ($)**	**S ($)**	**M ($)**	**Fees Paid ($)**
Utility	300	150*	75	660	330	165	760	380	190	1720
Design	200	100	50	160	80	40	600	300	150	
Plant	200	100	50	420	210	105	620	310	155	
Reissue	300	150	75	660	330	165	2,200	1,100	550	
Provisional	280	140	70	0	0	0	0	0	0	

* The $150 small entity status filing fee for a utility application is further reduced to $75 for a small entity status applicant who files the application via EFS-Web.

2. EXCESS CLAIM FEES

Fee Description	**Undiscounted Fee ($)**	**Small Entity Fee ($)**	**Micro Entity Fee ($)**
Each claim over 20 (including Reissues)	100	50	25
Each independent claim over 3 (including Reissues)	460	230	115
Multiple dependent claims	820	410	205

Total Claims _____ -20 or HP = **Extra Claims** _____ x **Fee ($)** _____ = **Fee Paid ($)** _____

HP = highest number of total claims paid for, if greater than 20.

Multiple Dependent Claims **Fee ($)** _____ **Fee Paid ($)** _____

Indep. Claims _____ -3 or HP = **Extra Claims** _____ x **Fee ($)** _____ = **Fee Paid ($)** _____

HP = highest number of independent claims paid for, if greater than 3.

3. APPLICATION SIZE FEE

If the specification and drawings exceed 100 sheets of paper (excluding electronically filed sequence or computer listings under 37 CFR 1.52(e)), the application size fee due is $400 ($200 for small entity) ($100 for micro entity) for each additional 50 sheets or fraction thereof. See 35 U.S.C. 41(a)(1)(G) and 37 CFR 1.16(s).

Total Sheets _____ - 100 = **Extra Sheets** _____ / 50 = **Number of each additional 50 or fraction thereof** _____ (round **up** to a whole number) x **Fee ($)** _____ = **Fee Paid ($)** _____

4. OTHER FEE(S) **Fees Paid ($)**

Non-English specification, $130 fee (no small or micro entity discount) _____

Non-electronic filing fee under 37 CFR 1.16(t) for a utility application, $400 fee ($200 small or micro entity) _____

Other (e.g., late filing surcharge): _____ _____

SUBMITTED BY

Signature	/Philip H. Burrus, IV/	Registration No. (Attorney/Agent) 45432	Telephone 4047978111
Name (Print/Type)	Philip H. Burrus, IV		Date 2020-07-31

This collection of information is required by 37 CFR 1.136. The information is required to obtain or retain a benefit by the public which is to file (and by the USPTO to process) an application. Confidentiality is governed by 35 U.S.C. 122 and 37 CFR 1.14. This collection is estimated to take 30 minutes to complete, including gathering, preparing, and submitting the completed application form to the USPTO. Time will vary depending upon the individual case. Any comments on the amount of time you require to complete this form and/or suggestions for reducing this burden, should be sent to the Chief Information Officer, U.S. Patent and Trademark Office, U.S. Department of Commerce, P.O. Box 1450, Alexandria, VA 22313-1450. DO NOT SEND FEES OR COMPLETED FORMS TO THIS ADDRESS. **SEND TO: Commissioner for Patents, P.O. Box 1450, Alexandria, VA 22313-1450.**

If you need assistance in completing the form, call 1-800-PTO-9199 and select option 2.

Privacy Act Statement

The **Privacy Act of 1974 (P.L. 93-579)** requires that you be given certain information in connection with your submission of the attached form related to a patent application or patent. Accordingly, pursuant to the requirements of the Act, please be advised that: (1) the general authority for the collection of this information is 35 U.S.C. 2(b)(2); (2) furnishing of the information solicited is voluntary; and (3) the principal purpose for which the information is used by the U.S. Patent and Trademark Office is to process and/or examine your submission related to a patent application or patent. If you do not furnish the requested information, the U.S. Patent and Trademark Office may not be able to process and/or examine your submission, which may result in termination of proceedings or abandonment of the application or expiration of the patent.

The information provided by you in this form will be subject to the following routine uses:

1. The information on this form will be treated confidentially to the extent allowed under the Freedom of Information Act (5 U.S.C. 552) and the Privacy Act (5 U.S.C 552a). Records from this system of records may be disclosed to the Department of Justice to determine whether disclosure of these records is required by the Freedom of Information Act.
2. A record from this system of records may be disclosed, as a routine use, in the course of presenting evidence to a court, magistrate, or administrative tribunal, including disclosures to opposing counsel in the course of settlement negotiations.
3. A record in this system of records may be disclosed, as a routine use, to a Member of Congress submitting a request involving an individual, to whom the record pertains, when the individual has requested assistance from the Member with respect to the subject matter of the record.
4. A record in this system of records may be disclosed, as a routine use, to a contractor of the Agency having need for the information in order to perform a contract. Recipients of information shall be required to comply with the requirements of the Privacy Act of 1974, as amended, pursuant to 5 U.S.C. 552a(m).
5. A record related to an International Application filed under the Patent Cooperation Treaty in this system of records may be disclosed, as a routine use, to the International Bureau of the World Intellectual Property Organization, pursuant to the Patent Cooperation Treaty.
6. A record in this system of records may be disclosed, as a routine use, to another federal agency for purposes of National Security review (35 U.S.C. 181) and for review pursuant to the Atomic Energy Act (42 U.S.C. 218(c)).
7. A record from this system of records may be disclosed, as a routine use, to the Administrator, General Services, or his/her designee, during an inspection of records conducted by GSA as part of that agency's responsibility to recommend improvements in records management practices and programs, under authority of 44 U.S.C. 2904 and 2906. Such disclosure shall be made in accordance with the GSA regulations governing inspection of records for this purpose, and any other relevant (*i.e.*, GSA or Commerce) directive. Such disclosure shall not be used to make determinations about individuals.
8. A record from this system of records may be disclosed, as a routine use, to the public after either publication of the application pursuant to 35 U.S.C. 122(b) or issuance of a patent pursuant to 35 U.S.C. 151. Further, a record may be disclosed, subject to the limitations of 37 CFR 1.14, as a routine use, to the public if the record was filed in an application which became abandoned or in which the proceedings were terminated and which application is referenced by either a published application, an application open to public inspection or an issued patent.
9. A record from this system of records may be disclosed, as a routine use, to a Federal, State, or local law enforcement agency, if the USPTO becomes aware of a violation or potential violation of law or regulation.

Electronic Patent Application Fee Transmittal

Application Number:	
Filing Date:	
Title of Invention:	Catheter Tray, Packaging System, Instruction Insert, and Associated Methods
First Named Inventor/Applicant Name:	Jennifer Tomes
Filer:	Philip Henry Burrus/Kayla Burrus
Attorney Docket Number:	10055UCIP2D1C1C1C1C1C1

Filed as Large Entity

Filing Fees for Utility under 35 USC 111(a)

Description	Fee Code	Quantity	Amount	Sub-Total in USD($)
Basic Filing:				
UTILITY APPLICATION FILING	1011	1	300	300
UTILITY SEARCH FEE	1111	1	660	660
UTILITY EXAMINATION FEE	1311	1	760	760
Pages:				
Claims:				
Miscellaneous-Filing:				
Petition:				
Patent-Appeals-and-Interference:				

Description	Fee Code	Quantity	Amount	Sub-Total in USD($)
Post-Allowance-and-Post-Issuance:				
Extension-of-Time:				
Miscellaneous:				
		Total in USD ($)		**1720**

Electronic Acknowledgement Receipt	
EFS ID:	40162556
Application Number:	16944667
International Application Number:	
Confirmation Number:	8322
Title of Invention:	Catheter Tray, Packaging System, Instruction Insert, and Associated Methods
First Named Inventor/Applicant Name:	Jennifer Tomes
Customer Number:	27939
Filer:	Philip Henry Burrus/Kayla Burrus
Filer Authorized By:	Philip Henry Burrus
Attorney Docket Number:	10055UCIP2D1C1C1C1C1C1
Receipt Date:	31-JUL-2020
Filing Date:	
Time Stamp:	14:12:57
Application Type:	Utility under 35 USC 111(a)

Payment information:

Submitted with Payment	yes
Payment Type	CARD
Payment was successfully received in RAM	$1720
RAM confirmation Number	E20207UE13170995
Deposit Account	
Authorized User	
The Director of the USPTO is hereby authorized to charge indicated fees and credit any overpayment as follows:	

File Listing:

Document Number	Document Description	File Name	File Size(Bytes)/ Message Digest	Multi Part /.zip	Pages (if appl.)
1		10055U_CIP2_D1_C1C1C1C1C1_USA_2020-7-27_Spec.pdf	331843 1475a8e81273b9953ccea7936a6527e58f56d92a	yes	52
	Multipart Description/PDF files in .zip description				
	Document Description		**Start**	**End**	
	Specification		1	47	
	Claims		48	51	
	Abstract		52	52	
Warnings:					
Information:					
2	Application Data Sheet	10055U_CIP2_D1_C1C1C1C1C1_USA_2020-7-31_ADS.pdf	1824540 faba156d3f877313146a8c951d6d8161d33004f7	no	12
Warnings:					
Information:					
3	Drawings-only black and white line drawings	10055U_CIP2D1C1C1C1C1C1_FIGS_All.pdf	7668118 0e3e4624f02a6789523a37e094b7e85da13991f8	no	35
Warnings:					
Information:					
4	Oath or Declaration filed	10055U_P2_D1_C1_USA_2017-7-7_Declarations_Filed.pdf	6289078 d59371cdd402ebf161595bc7321b97837e866ee4	no	8
Warnings:					
Information:					
5	Transmittal of New Application	10055UCIP2D1C1C1C1C1C1_USA_2020-7-31_FeeTrans.pdf	190500 e39b19f770d68548dd789ec5ab5bfa164125a2fd	no	2

Warnings:					
Information:					
6	Fee Worksheet (SB06)	fee-info.pdf	35127 4f7dc7d5b7cf0396fc9d10e47726d3ff20344d7e	no	2
Warnings:					
Information:					
			Total Files Size (in bytes):	16339206	

This Acknowledgement Receipt evidences receipt on the noted date by the USPTO of the indicated documents, characterized by the applicant, and including page counts, where applicable. It serves as evidence of receipt similar to a Post Card, as described in MPEP 503.

<u>New Applications Under 35 U.S.C. 111</u>
If a new application is being filed and the application includes the necessary components for a filing date (see 37 CFR 1.53(b)-(d) and MPEP 506), a Filing Receipt (37 CFR 1.54) will be issued in due course and the date shown on this Acknowledgement Receipt will establish the filing date of the application.
<u>National Stage of an International Application under 35 U.S.C. 371</u>
If a timely submission to enter the national stage of an international application is compliant with the conditions of 35 U.S.C. 371 and other applicable requirements a Form PCT/DO/EO/903 indicating acceptance of the application as a national stage submission under 35 U.S.C. 371 will be issued in addition to the Filing Receipt, in due course.
<u>New International Application Filed with the USPTO as a Receiving Office</u>
If a new international application is being filed and the international application includes the necessary components for an international filing date (see PCT Article 11 and MPEP 1810), a Notification of the International Application Number and of the International Filing Date (Form PCT/RO/105) will be issued in due course, subject to prescriptions concerning national security, and the date shown on this Acknowledgement Receipt will establish the international filing date of the application.

Catheter Tray, Packaging System, Instruction Insert, and Associated Methods

CROSS REFERENCE TO PRIOR APPLICATIONS

[001] This application is a continuation application claiming priority to Ser. No. 16/833,575, filed March 28, 2020, which is a continuation application claiming priority to Ser. No. 15/684,787, filed August 23, 2017, which is a continuation application claiming priority to Ser. No. 14/793,455, filed July 7, 2015, which is a continuation application claiming priority to Ser. No. 13/860,902, filed April 11, 2013, which is a divisional application from Ser. No. 13/155,026, filed June 7, 2011, which claims priority and benefit under 35 U.S.C. §119(e) from U.S. Provisional Applications: Ser. No. 61/352,140, filed June 7, 2010; Ser. No. 61/352,155, filed June 7, 2010; Ser. No. 61/428,944, filed December 31, 2010; and Ser. No. 61/437,796, filed January 31, 2011, each of which is incorporated herein by reference. Moreover, Ser. No. 13/155,026 is further a continuation in part of: Ser. No. 12/495,148, filed June 30, 2009, which claims priority and bent under 35 U.S.C. §119(e) from U.S. Provisional Application: Ser. No. 61/183,629, filed June 3, 2009; Ser. No. 12/647,515, filed December 27, 2009; Ser. No. 13/153,265, filed June 3, 2011; and Ser. No. 13/153,300, filed June 3, 2011, each of which is incorporated herein by reference. As the present application claims priority to Ser. No. 13/155,026 through Ser. No. 14/793,455 and Ser. No. 13/860,902, the present application also, by law, claims priority to each of Ser. No. 12/495,148, Ser. No. 12/647,515, Ser. No. 13/153,265, and Ser. No. 13/153,300 through its priority claim to Ser. No. 13/155,026.

[002] This application is related to commonly assigned US Pat. No. 7,624,869 to Primer, which is incorporated herein by reference. This application is related to commonly assigned US Patent Application No. 12/004,796, filed December 21, 2007, which is incorporated herein by reference.

Bard Exhibit 1004.0009

BACKGROUND

TECHNICAL FIELD

[003] This invention relates generally to storage containers for medical devices, and more particularly to a storage container for a long, flexible medical implement, such as a catheter, and related medical devices, as well as an instruction manual included therewith.

BACKGROUND ART

[004] Medical devices, including surgical instruments, supplies, and so forth, are generally shipped from manufacturer to medical services provider in sterile packaging. For example, a scalpel may be shipped to a surgeon in a plastic, vacuum-sealed, sterile package. Similarly, bandages may be shipped in paper, plastic, or paper composite sterile wrappers. When the medical services provider is ready to use the medical supply, the sterile package is removed. The medical services provider then uses the object in accordance with the procedure being performed.

[005] While conventional packaging works well for objects having a generally unchanging form factor, special considerations have to be taken into consideration for some medical supplies. By way of example, catheter assemblies and other flexible equipment is generally shipped in a coiled configuration. Once the sterile packaging is removed, the catheter must be uncoiled prior to use. Care must be taken in shipping, unwrapping, and using the catheter. For instance, if a catheter is inadvertently bent, kinked, or otherwise damaged, it may no longer be suitable for use. Compounding this issue, catheters are available in a variety of lengths ranging from 100 centimeters to over 250 centimeters.

[006] Traditional catheters are packaged, for example, in individual packaging. The catheter and card are then sealed in a sterile plastic wrap. These catheters are prone to damage in shipment, storage, and when being unpacked, as the card and wrap provide little physical protection.

Bard Exhibit 1004.0010

[007] Some manufacturers have started shipping catheters and other similar devices in flat plastic trays. For example, US Pat. No. 6,068,121 to McGlinch teaches one such tray. The tray has several specifically contoured loops such that one universal tray will accommodate several different sized catheters. Such packaging presents a problem, however, in that large amounts of storage space are taken with a universal tray, especially when a relatively short catheter is shipped therein. Additionally, when in use, these trays occupy large amounts of a medical service provider's sterile workspace or table, leaving little room for related components, such as lubricants, fluid bags, and so forth.

[008] There is thus a need for an improved container for flexible medical devices or catheters that facilitates more effective and simpler deployment of the device during a procedure.

BRIEF DESCRIPTION OF THE DRAWINGS

[009] The accompanying figures, where like reference numerals refer to identical or functionally similar elements throughout the separate views and which together with the detailed description below are incorporated in and form part of the specification, serve to further illustrate various embodiments and to explain various principles and advantages all in accordance with the present invention.

[010] FIG. 1 illustrates a top, front, right perspective view of one embodiment of a tray for a catheter or similar assembly in accordance with embodiments of the invention.

[011] FIG. 2 illustrates a top, front, left perspective view of one embodiment of a tray for a catheter or similar assembly in accordance with embodiments of the invention.

[012] FIG. 3 illustrates a top plan view of one embodiment of a tray for a catheter or similar assembly in accordance with embodiments of the invention.

[013] FIG. 4 illustrates a front elevation view of one embodiment of a tray for a catheter or similar assembly in accordance with embodiments of the invention.

Bard Exhibit 1004.0011

[014] FIG. 5 illustrates a cut-away, left elevation view of one embodiment of a tray for a catheter or similar assembly in accordance with embodiments of the invention.

[015] FIG. 6 illustrates a bottom plan view of one embodiment of a tray for a catheter or similar assembly in accordance with embodiments of the invention.

[016] FIG. 7 illustrates a top, front, right perspective view of one embodiment of a tray for a catheter or similar assembly, with a catheter and corresponding procedural devices disposed therein, in accordance with embodiments of the invention.

[017] FIG. 8 illustrates a top plan view of one embodiment of a tray for a catheter or similar assembly, with a catheter and corresponding procedural devices disposed therein, in accordance with embodiments of the invention.

[018] FIG. 9 illustrates a transparent, front elevation view of one embodiment of a tray for a catheter or similar assembly, with a catheter and corresponding procedural devices disposed therein, in accordance with embodiments of the invention.

[019] FIG. 10 illustrates a perspective view of one embodiment of a tray for a catheter or similar assembly, with a catheter and corresponding procedural devices disposed therein, along with instructions and packaging, in accordance with embodiments of the invention.

[020] FIG. 11 illustrates a method of manufacturing one embodiment of a tray for a catheter or similar assembly, with a catheter and corresponding procedural devices disposed therein, in accordance with embodiments of the invention.

[021] FIG 12 illustrates one embodiment of printed instructions in accordance with embodiments of the invention.

[022] FIG. 13 illustrates one embodiment of printed instructions in accordance with embodiments of the invention.

[023] FIGS. 14-19 illustrate exemplary panels of printed instructions in accordance with embodiments of the invention.

Bard Exhibit 1004.0012

[024] FIG. 20 illustrates a physical configuration of printed instructions in accordance with one embodiment of the invention.

[025] FIG. 21 illustrates a method in accordance with embodiments of the invention.

[026] FIGS. 22-30 illustrate various stages of a method of enclosing a medical procedure kit configured in accordance with embodiments of the invention.

[027] FIGS. 31-33 illustrate various stages of a method of deploying a medical procedure kit configured in accordance with embodiments of the invention.

[028] FIGS. 34-37 illustrate various stages of an alternative method of enclosing a medical procedure kit configured in accordance with embodiments of the invention.

[029] FIGS. 38-39 illustrate various stages of an alternative method of enclosing a medical procedure kit configured in accordance with embodiments of the invention.

[030] FIG. 40 illustrates an alternate health care services provider portion of printed materials configured as an adhesive label with an opening flap in accordance with one embodiment of the invention.

[031] FIG. 41 illustrates an alternative patient portion of printed instructions configured as a greeting card and having patient information therein, in accordance with one embodiment of the invention.

[032] Skilled artisans will appreciate that elements in the figures are illustrated for simplicity and clarity and have not necessarily been drawn to scale. For example, the dimensions of some of the elements in the figures may be exaggerated relative to other elements to help to improve understanding of embodiments of the present invention.

DETAILED DESCRIPTION OF THE INVENTION

[033] Embodiments of the invention are now described in detail. Referring to the drawings, like numbers indicate like parts throughout the views. As used in the description herein and throughout the claims, the following terms take the meanings explicitly associated herein, unless

Bard Exhibit 1004.0013

the context clearly dictates otherwise: the meaning of "a," "an," and "the" includes plural reference, the meaning of "in" includes "in" and "on." Relational terms such as first and second, top and bottom, and the like may be used solely to distinguish one entity or action from another entity or action without necessarily requiring or implying any actual such relationship or order between such entities or actions. Also, reference designators shown herein in parenthesis indicate components shown in a figure other than the one in discussion. For example, talking about a device (10) while discussing figure A would refer to an element, 10, shown in figure other than figure A.

[034] Embodiments of the present invention provide a medical procedure kit that includes medical products for performing a medical procedure. In one embodiment, the medical procedure kit is configured for a catheterization procedure. Such an embodiment will be used herein for illustration purposes. However, it will be clear to those of ordinary skill in the art having the benefit of this disclosure that embodiments of the invention are not so limited. Other medical procedure kits for performing other procedures could be substituted for the illustrative catheterization tray disclosed herein by substituting other medical implements for the catheterization implements. In the illustrative embodiment, a tray is configured to accommodate a medical device or assembly. In an illustrative embodiment, the medical device is a coiled device, such as a catheter or catheter assembly. In addition to accommodating the coiled medical device, embodiments of the present invention are also configured to contain devices and materials intended for use with the coiled medical device.

[035] Using a catheter assembly as an example, when a catheter assembly is inserted into a patient, sterile water may be used to inflate the catheter. Additionally, the catheter may be coated in a lubricating jelly prior to insertion into the patient. Fluids and other samples may then be monitored and obtained from the patient via the catheter. Embodiments of the present invention provide a single container configured to accommodate not only the catheter assembly and fluid

Bard Exhibit 1004.0014

bag, but also syringes containing sterile water or lubricants. Further, the tray can accommodate a sterile specimen jar for capturing samples taken from the patient via the catheter.

[036] In addition to simply accommodating these corresponding medical devices, in one embodiment the tray is configured to provide the medical services provider with mnemonic devices instructing them in which order to use each device. For example, a compartment containing syringes, in one embodiment, includes an inclined, stair-stepped bottom member to present the plungers of each syringe at an easy to reach angle and at different heights based upon order of use.

[037] Another advantage of embodiments of the present invention is that compartments have multi-purpose functionality. For example, in one embodiment, a container configured to accommodate a syringe having lubricating jelly disposed therein is also configured to be used as a lubricating jelly applicator. A medical services provider first dispenses the lubricating jelly into the syringe compartment. The medical services provider then passes the catheter from another compartment through an opening in a barrier separating the compartments into the lubricating jelly. As such, the tray not only serves as a shipping and storage container for an assembly of devices used with a catheter procedure, but also as an application device to assist a medical services provider in using those products together.

[038] Turning now to FIGS. 1-6, illustrated therein are views of one embodiment of a tray 100 configured to accommodate a catheter assembly in accordance with embodiments of the invention. FIG. 1 illustrates a top, front right perspective view of the tray 100. FIG. 2 illustrates a top, front, left perspective view of the tray 100. FIG. 3 illustrates a top plan view of the tray 100. FIG. 4 illustrates a front elevation view of the tray 100. FIG. 5 illustrates a cut-away, left elevation view of one embodiment of a tray 100. Likewise, FIG. 6 illustrates a bottom plan view of the tray 100. For simplicity of discussion, these figures will be referred to collectively with like reference numerals referring to identical or functionally similar elements throughout the separate views.

Bard Exhibit 1004.0015

[039] The tray 100, in one embodiment, is formed by a contoured surface 104 that defines the various features and compartments of the tray 100. The contoured surface 104 of the tray 100 can be manufactured in various ways. For example, in one embodiment, the tray 100 can be thermally formed on a mold from a soft thermoplastic, such as styrene or polystyrene. In another embodiment, the tray 100 can be injection molded. In another embodiment, the tray can be poured on a mold using a quick setting plastic, epoxy, or resin. Other methods of manufacture will be obvious to those of ordinary skill in the art having the benefit of this disclosure.

[040] Exemplary dimensions for one embodiment of the tray 100 are as follows: The length 112 can be between nine and twelve inches, such as ten inches. One illustrative length 112 may be 10.380 inches. Similarly, the width 113 can be between eight and eleven inches, such as nine inches. One illustrative width 113 is 9.250 inches. The height 114 can be between one and three inches. One illustrative height 114 is 1.750 inches.

[041] In one embodiment, the tray 100 includes three main compartments: a first compartment 101, a second compartment 102, and a third compartment 103. The first compartment 101 is separated from the second compartment 102 by a first barrier 105. The second compartment 102 is separated from the third compartment 103 by a second barrier 106.

[042] In one embodiment, the compartments are open from the top of the tray 100 – the top being opposite the base members of the tray 100 – and are bounded on the bottom by a first base member 107, a second base member 108, and a third base member 109. The compartments are bounded on the sides by a perimeter wall 110. In the illustrative “open top” embodiment of FIG. 1, the perimeter wall 110 ends in a horizontal flange 111 extending substantially orthogonally from the perimeter wall 110. It will be clear to those of ordinary skill in the art having the benefit of this disclosure that embodiments other than that shown in FIG. 1 are possible without departing from the spirit and scope of the invention. For instance, the top of the tray 100 could

have a hinged or snap-coupled lid that is opened or removed to reveal the compartments there beneath.

[043] In one illustrative embodiment, the tray 100 is configured to hold or otherwise accommodate all of the necessary devices and materials to perform a catheter-based procedure on a patient. Said differently, the tray 100 is configured to hold not only the catheter assembly, but the medical devices corresponding to catheter use as well. Using one illustrative procedure as an example, the following devices will be used: a syringe holding sterile water, a syringe holding lubricating jelly or another equivalent lubricant, a catheter assembly, skin cleansing or preparation materials, and a specimen jar. The various compartments and features of the tray 100 shown in FIGS. 1-6 will be described for use with these devices. As will be described in more detail below, additional objects can be included with the tray, such as one or more towels, a drape to cover the patient, rubber gloves, hand sanitizing materials, swab sticks, a securement device, a Foley insert tag, a printed instruction pamphlet, and so forth. The syringe holding sterile water, syringe holding lubricating jelly, catheter assembly, and specimen jar are used for illustration purposes only, as it will be clear that other objects may be added to or substituted for these objects. Further, subsets of these objects may be used.

[044] In one embodiment suitable for procedures using the syringe holding sterile water, syringe holding lubricating jelly, catheter assembly, and specimen jar, in one embodiment, the tray 100 is configured such that these objects are ordered in accordance with their use during the procedure. For example, in one embodiment the tray 100 includes a first compartment 101 for accommodating one or more syringes, a second compartment 102 for accommodating the catheter assembly, and a third compartment 103 for accommodating the specimen jar. These devices stowed in the various compartments will be illustrated and described with respect to FIGS. 7-10 below. The discussion of FIGS. 1-6 will include the features of the tray 100 that make the tray100 suitable for accommodating these devices.

[045] For example, in one embodiment the first compartment base member 107 includes a stair-stepped contour 115 suitable for accommodating a plurality of syringes at different heights. For example, a first step portion 116 of the stair-stepped contour 115 may be at a different height within the tray 100 than a second step portion 117 of the stair-stepped contour. In the illustrative embodiment of FIGS. 1-6, the first step portion 116 – which is disposed farther from the first barrier 105 than the second step portion 117 – is shallower than the second step portion 117. Said differently, the second step portion 117 is disposed at a greater depth within the tray 100 than the first step portion 116.

[046] The stair-stepped contour 115 can be used as mnemonic device when multiple syringes are stored within the first compartment 101. For example, it may be intuitive that a syringe placed on a higher step portion may need to be used first. This intuition is further enforced when the higher step portion is disposed farther to the left in a left-to-right usage configuration. Thus, a user receives a mnemonic reminder to use a syringe disposed on the first step portion 116 prior to a syringe disposed on the second step portion 117, as it is both higher and farther to the left.

[047] Where syringes are stowed in the first compartment 101, the first compartment base member 107 can further be configured for syringe ease of use. For example, in one embodiment the first compartment base member 107 is inclined relative to other compartment base members. In the illustrative embodiment of FIGS. 1-6, the second compartment base member 108 and third compartment base member 109 are substantially coplanar with each other. Further, the second compartment base member 108 and third compartment base member 109 are generally flat in these views, although it will be clear to those of ordinary skill in the art having the benefit of this disclosure that contours could be incorporated into one or both of these base members.

[048] In this illustrative embodiment, however, the first compartment base member 107 is configured to be inclined relative to one or both of the second compartment base member 108 and third compartment base member 109. As such, the stair-stepped contour 115 forms a ramp upon

Bard Exhibit 1004.0018

which syringes may be placed so that the plunger of each syringe is predisposed to project upward and out of the tray 100. Said differently, the stair-stepped contour 115 is configured such that the first step portion 116 and the second step portion 117 are disposed in a non-parallel orientation relative to the second compartment base member 108. This configuration makes it easier for a medical services provider to grasp the syringes and remove them from the tray 100.

[049] The first compartment base member 107 may include other features suitable for accommodating one or more syringes as well. In one embodiment, one or both of the first step portion 116 and second step portion 117 include recesses 118,119 for accommodating a syringe flange. These recesses 118,119 generally function to prevent the syringes from sliding lengthwise within the first compartment 101. Similarly, in one embodiment one or both of the first step portion 116 and the second step portion 117 include protrusions 120 that help to prevent the syringes from sliding laterally within the first compartment 101.

[050] In one embodiment, one or both of the first barrier 105 and the second barrier 106 include openings disposed therein. In the illustrative embodiment shown in FIGS. 1-6, the first barrier 105 includes a first opening 121 between the first compartment 101 and the second compartment 102. Similarly, the second barrier 106 includes a second opening 122 between the second compartment 102 and the third compartment 103. Each of these openings has an opening depth associated therewith. Similarly, each opening has an opening width associated therewith. In the illustrative embodiment of FIGS. 1-6, the first opening 121 is bounded by a first opening base member 129 and two inclined first opening side members 127,128, while the second opening 122 is bounded by a second opening base member 131, an inclined second opening side member 130, and the perimeter wall 110.

[051] While the opening depths can be the same, in one embodiment the opening depths are different. For example, in the illustrative embodiments of FIGS. 1-6, the first opening 121 has a first opening depth 123 that is less than the second opening depth 124 of the second opening 122. Similarly, in one embodiment the opening widths are different. For example, in the illustrative

Bard Exhibit 1004.0019

embodiments of FIGS. 1-6, the first opening 121 has a first opening width 125 that is less than the second opening width 126 of the second opening 122. Such a disparity in opening depths and widths, as well as the inclusion of inclined opening side members, provides an advantage in some applications.

[052] For instance, in many catheter procedures a pair of syringes – such as syringes having a one-half inch diameter – fits easily into the first compartment 101 when the tray 100 is made with the illustrative dimensions set forth above. However, some procedures require one or more of the syringes to be larger. For example, some syringes are larger in diameter. These larger syringes are capable of nesting within the first opening 121 and second opening 122. The inclined opening side members prevent the syringe from moving lengthwise, while the disparate opening heights present the plunger of the syringe to the medical services provider for easy removal from the tray 100.

[053] The stair-stepped contour 115, working in tandem with the first opening 121, gives the tray additional advantages over prior art catheter containers. For instance, when the first compartment 101 has a first compartment base member 107 configured with a stair-stepped contour 115, the first compartment 101 can be used as a lubricant applicator for the catheter.

[054] Specifically, the medical services provider may dispense the lubricating jelly along the second step portion 117. As the second step portion 117 is lower in the tray 100 than the first step portion 116, the second step portion 117 serves as a channel in which the lubricating jelly may spread. A medical services provider may then pass the catheter through the first opening 121, through the channel formed by the second step portion 117, i.e., along the second step portion 117 through the dispensed lubricating jelly, and out the top of the tray 100 to the patient. This feature of the tray 100 greatly eases the application of lubricating jelly to the catheter when compared to prior art solutions. In one embodiment, the tray 100 is packaged with printed instructions showing the medical services provider how to apply lubricating jelly in this manner. The printed instructions will be described in more detail below with respect to FIGS. 12-23.

Bard Exhibit 1004.0020

[055] It will be clear to those of ordinary skill in the art having the benefit of this disclosure that alternative methods may be used to apply the lubricating jelly as well. For example, in another embodiment, the lubricating jelly is dispensed directly onto the catheter tubing while the tubing is in or above the first compartment 101. Excess lubricant falling from the catheter tubing can then collect, and be retained, in the second step portion 117.

[056] This particular feature highlights another advantage of the "compartmentalized" structure of various embodiments of the invention. As the tray 100 includes multiple compartments, various tasks associated with a catheterization procedure can be completed while keeping the catheter within the tray 100. The ability to keep the catheter in the tray 100 reduces the risk that the catheter or corresponding devices will be contaminated with bacteria or microbes on other objects within the procedure room. For example, when the first compartment 101 is used to apply lubricating jelly to the catheter, the lubricating jelly can be applied while the catheter is contained within the tray 100, thereby reducing the risk that the catheter will become contaminated. This correspondingly reduces the risk of infection for the patient receiving the catheter.

[057] Prior art systems, for example such as those in which the catheterization procedure components are shipped in separate containers, may contribute to substandard techniques in that the catheter can become contaminated when moving it from its shipping container. Consequently, the patient can be at an elevated risk of infection as the catheter is moved from one tray to another. Embodiments of the present invention solve this problem by providing a single level tray 100 with compartments. Further, in one embodiment the first compartment 101 includes the first opening 121 so the catheter can stay in place during and after lubrication. By having easy access to the components disposed in the single level tray 100, the medical services provider can more easily prepare and use the components within the tray 100. This helps to minimize the risk of contaminating the patient or the sterile field during the procedure.

Bard Exhibit 1004.0021

[058] In one embodiment, the second step portion 117 is configured to be inclined at a shallower angle than the first step portion 116 in at least a portion opposite the recess 119 from the first opening 121. When configured in such a fashion, the second step portion 117 includes a "cutdown" so that the catheter can stay within the channel both during and after lubrication.

[059] Additionally, the catheter can be placed in both the first opening 121 and second opening 122 during lubrication. When positioned in this configuration, the second opening 122 helps to align the catheter with the first opening for easy passage through the lubrication channel formed by the second step portion 117.

[060] The tray 100 of FIGS. 1-6 includes additional advantages over prior art catheter packaging as well. For example, in one embodiment, instructions 132 or other graphical indicia can be printed, placed upon, or molded into the horizontal flange 111. In one embodiment, compartment designations can be placed above each compartment to ensure the medical services provider uses the correct device or material at the correct time. In another embodiment, expiratory dates for materials or devices disposed within the tray 100 may be placed on the horizontal flange 111. It will be obvious to those of ordinary skill in the art having the benefit of this disclosure that the invention is not so limited. Any number of various text or picture combinations can be printed on, placed upon, or molded into various parts of the tray. For instance, graphical indicia can be applied to the compartment base members in addition to the horizontal flange 111. Note that the horizontal flanges, in one embodiment, can terminate in downwardly protruding vertical flanges for increased stability during the printing process.

[061] Another advantage of the tray 100 is that its compartmentalized configuration helps to reduce the risk of contaminating a patient or compromising the sterile nature of the components stored in the tray 100. Since both the catheter assembly and medical devices corresponding to catheter use are stored within the same tray 100, the risk of cross-contamination between sterile work areas and non-sterile spaces is minimized. Further, by having the catheter assembly and the

Bard Exhibit 1004.0022

devices corresponding to catheter use stowed in a one-level tray rather than a multi-level, stacked configuration, the medical services provider can more easily prepare and use the catheter and corresponding devices disposed within the tray 100.

[062] Turning now to FIGS. 7-9, illustrated therein is a tray having a catheter assembly 700, syringes 701,702, and a specimen container 703 stored therein as a catheter packaging system in accordance with one embodiment of the invention. As with FIGS. 1-6, FIGS. 7-9 will be referred to collectively with like reference numerals referring to identical or functionally similar elements throughout the separate views. FIG. 7 illustrates a top, front, right perspective view of the catheter packaging system, while FIG. 8 illustrates a top plan view of the catheter packaging system. FIG. 9 illustrates a transparent, front elevation view of the catheter packaging system.

[063] The illustrative catheter packaging system of FIGS. 7-9 includes a tray 100 having a first compartment 101, a second compartment 102, and a third compartment 103. In this illustrative embodiment, the first compartment 101 is configured to accommodate syringes 701,702. The second compartment 102 is configured to accommodate a coiled medical device, such as catheter assembly 700. The third compartment 103 is configured to accommodate the specimen container 703. The third compartment 103 can accommodate other materials as well, including skin sanitizers and cleansing liquids, solutions, or gels. As mentioned above, additional devices corresponding to catheter use, including towels, drapes, rubber gloves, and so forth, can be disposed in the tray 100 as well. As an illustration of this flexibility, a towel 704 is disposed beneath the catheter assembly 700.

[064] As noted above, in one embodiment the flange 111 can include instructions 770 or other graphical indicia. As also noted above, the implements disposed in the various compartments 101,102,103 can have implements therein arranged in accordance with use. In one embodiment, shown illustratively in FIG. 7, the instructions 770 can be coordinated with this arrangement, indicating that components disposed in the first compartment 101 should be used first, components disposed in the second compartment 102 should be used next, and so forth. To assist

Bard Exhibit 1004.0023

the user in understanding workflow, arrows 771 or other directional elements can be included on the flange 111 as well.

[065] As illustrated in FIGS. 1-6, each compartment of the tray 100 includes a compartment base member. Further, each compartment is separated by a barrier having an opening therein. A first barrier 105 having a first opening 121 therein separates the first compartment 101 from the second compartment 102. Similarly, a second barrier 106 having a second opening 122 therein separates the second compartment 102 from the third compartment.

[066] Syringes 701,702 are disposed in the first compartment, with one syringe 701 being supported at a different elevation within the tray than the other syringe 702. The different elevations can be relative to each syringe 701,702, or to other components of the tray 100, such as the second compartment base member 108. Said differently, one syringe 701 is supported by the first compartment base member 107 at a shallower depth within the tray 100 than the depth of the second compartment base member 108. Further, where the first compartment base member 107 is inclined relative to other base members, one or both syringes 701,702 will be supported in a non-parallel configuration relative to the second compartment base member 108. This is most readily seen in FIG. 9.

[067] As noted above, some medical procedures will call for more materials than can be accommodated by a syringe capable of fitting within the first compartment 101. For such procedures, the tray 100 can be packed with larger syringes. A large syringe (not shown) can be supported laterally within the tray 100 when it is placed across the tray 100 such that it lies within both the first opening 121 of the first barrier 105 and the second opening 122 of the second barrier 106. Such a syringe will pass across the top of the catheter assembly 700, but will be held in place by the side members of each opening.

[068] Turning now to FIG. 10, illustrated therein is an exploded view of the tray 100 having the catheter assembly 700, a pair of syringes 701,702, and a specimen container 703 disposed therein.

Bard Exhibit 1004.0024

While only a specimen container 703 is shown as being disposed in the third compartment, note that additional items could also be included within the third compartment, including swab sticks. Other devices could also be inserted into the tray 100 in various compartments as well. For example, in one embodiment, a catheter securement device, and a Foley insertion tag, which is a dated and/or time stamped label that is secured to the catheter tubing once the catheter is inserted, can be inserted into the second compartment 102. Also, note that the pair of syringes 701,702 can be configured as shown in FIG. 10, or alternatively can be both inserted in the first compartment, as described above. In the configuration of FIG. 10, rather than having both syringes 701,702 disposed within the first compartment 101, one syringe 702 is disposed laterally in the first opening 121 and the second opening 122 of the first barrier 105 and second barrier 106, respectively. This configuration is illustrative only.

[069] Once the necessary components are disposed within the tray 100, the tray can be sealed with a wrap 1000 to keep the internal components sterile. The wrap 1000 can be any of a number of types of material. In one embodiment, the wrap 1000 comprises a Central Sterile Reprocessing (CSR) wrap that is used widely by medical professionals in hospitals, ambulatory surgical centers, and the like during medical procedures. While a CSR wrap is one example of a wrap that can be used, it will be clear to those of ordinary skill in the art that other wraps, such as plastic, cotton, linen, paper, or combinations thereof, can be substituted without departing from the spirit and scope of the invention.

[070] Using a CSR wrap as an illustrative example, in one embodiment as indicated in FIG. 10, the CSR wrap 1000 is folded about the tray 100 for sealing, and can be correspondingly unfolded to reveal the tray 100. Once unfolded, the CSR wrap 1000 can then be used in the catheter insertion process. For example, an unfolded CSR wrap 1000 can be used to provide a sterile field in which the tray 100 sits for unloading and subsequent use. This process will be explained in more detail in the discussion of FIGS. 22-30 below.

Bard Exhibit 1004.0025

[071] Printed instructions 1001 can then be attached to, disposed upon, or disposed within the tray 100. In one embodiment, the printed instructions 1001 include a health care services portion and a patient portion, as will be shown in FIGS. 12-13 below. The health care services portion can include instructions telling the health care services provider, for example, how to set up a sterile or otherwise clean work environment, how to prepare the catheter assembly 700 disposed within the tray, how to use the other devices within the tray, how to insert the catheter, how to secure the drainage bag to the catheter, how to empty the drainage bag, how to obtain a urine sample, and so forth. The instructions can include pictures or illustrations showing visually how the various steps should be done as well.

[072] The patient portion can include helpful suggestions or instructions for the patient. The patient portion can be detachably coupled to the health care services portion, such as by a perforated line that is easily torn to separate the patient portion from the health care services portion. Examples of suggestions or instructions that may be included in the patient portion include information on what a catheter is, what the patient should understand about the catheter, how to reduce the chance of getting an infection, information about infections commonly associated with catheters, symptoms of infections commonly associated with catheters, and suggestions for home use of the catheter assembly 700. In one embodiment, the health care services portion may include an instruction for the health care services provider to detach the patient portion from the health care services portion and instructions to discuss the patient portion with the patient.

[073] The health care services portion can tell the medical services provider how to perform a standard catheterization procedure. For instance, in one embodiment, the tray 100 is equipped with an adhesive label that can be used to identify the patient or specimen in the specimen container 703. Further, a label can be included to mark or otherwise identify the material in the fluid bag attached to the catheter. Such labels can include pre-printed fields, such as date, time and name. Further the printed instructions 1001 can notify the medical services provider that the

Bard Exhibit 1004.0026

devices disposed within the tray 100 are ordered corresponding to use during the catheterization procedure.

[074] In another embodiment, the printed instructions 1001 can inform the medical services provider of special instructions. For instance, in one embodiment the printed instructions 1001 can inform the medical services provider not to leave a catheter in a patient for more than forty-eight hours without a physician's approval. Where the printed instructions 1001 include such information, the labels included in the tray 100 may have pre-printed fields for the time of insertion that can be filled in by the medical services provider performing the catheterization procedure.

[075] Once the printed instructions 1001 have been affixed to, or placed with, within, or atop the tray 100, the assembly can be sealed in a sterile wrap 1002 such as a thermally sealed bag. The thermally sealed bag can optionally include a preformed opening. For example, in one embodiment, the opening can include one or more tabs that a health care services provider is instructed to pull to open the bag. Inclusion of a sterile wrap 1002 not only keeps the contents within the bag sterile, but also allows the instructions to be included with the tray assembly, yet outside the CSR wrap 1000.

[076] In one embodiment the printed instructions 1001 are disposed atop the CSR wrap 1000 such that the health care services portion of the printed instructions 1001 is disposed on the top of the printed instructions 1001, with the patient portion being disposed adjacent to the CSR wrap 1000, such as when the printed instructions 1001 are configured as an accordion-style folded instruction pamphlet. While the printed instructions 1001 of one embodiment are configured as a folded, printed, separate article disposed atop the CSR wrap 1000, it will be clear to those of ordinary skill in the art having the benefit of this disclosure that the invention is not so limited. For example, in one embodiment the sterile wrap 1002 can be optional. In one embodiment, rather than including separate printed instructions 1001, the instructions for use can be printed on the CSR wrap 1000 as well.

Bard Exhibit 1004.0027

[077] Additional instruction materials may be included with the completed assembly as well. For example, in one embodiment an adhesive instruction tag 1003 can be affixed to the sterile wrap 1002. In another embodiment the instruction tag may be adhered to an outer packaging, that encloses the tray, the sterile wrap material or both. For example, in one embodiment the instruction tag 1003 can include information regarding whether a catheter procedure is needed. Text 1004 such as "Is there a valid clinical reason?" may be included under an instruction to "Stop" that includes the following information:

[078] Before inserting the Foley catheter, at least one of the following conditions should exist:

[079] Acute urinary retention or obstruction

[080] Precise measurement of urinary output needed

[081] Select surgical procedures

[082] Open sacral or perineal wounds in incontinent patient

[083] Prolonged immobilization

[084] End of life care

[085] Further, checklist text 1005 may be included, such as "Checklist for Foley Catheter Insertion" included under the word "Check" that includes the following information:

[086] Check Each Box Upon Completion:

[087] Obtain order from physician/provider

[088] Document clinical reason for insertion

[089] Explain procedure to patient

[090] Use smallest catheter possible

[091] Perform hand hygiene

[092] Follow aseptic technique

[093] Additional information may also be included, such as a fillable form 1006 that provides fields for the date and time of insertion of the catheter to be recorded, the name of the health care services provider, and the signature of the health care services provider. The above text 1004 for the instruction tag 1003 is illustrative only, and may be customized as desired by the manufacturer.

[094] Turning now to FIG. 11, illustrated therein is a method 1100 for manufacturing a packaged catheter assembly in accordance with embodiments of the invention. At step 1101, the manufacturer provides a tray (100) having at least a first compartment (101) for accommodating one or more syringes (701,702) and a second compartment (102) for accommodating a flexible medical device, such as a catheter assembly (700). As noted above, in one embodiment the first compartment (101) will have a first compartment base member (107) having an inclined, stair-stepped contour (115). The first compartment (101) and second compartment (102) can be separated by a first barrier (105) having an opening (121) therein.

[095] Once the tray (100) is procured, the manufacturer can dispose at least one syringe (701) in the first compartment (101) at step 1102. Optionally, at step 1103, the manufacturer may include additional components with the tray (100). For example, a catheter securement device, a Foley insert tag, or other complementary components may be included at this step 1103.

[096] In one embodiment, as determined at decision 1105, a second syringe (702) will be disposed in the first compartment (101) at step 1106. In another embodiment, the second syringe (702) will be disposed laterally within the first opening (121) and, where present, a second opening (122) at step 1107.

[097] At step 1104, the manufacturer will place the catheter assembly (700) in the second compartment (102). Other components may be disposed in the tray (100) as well, including a specimen container (703) that is disposed in a third compartment (103) at step 1108. Further, other devices may be included, such as towels, drapes, printed instructions, one or more antiseptic

Bard Exhibit 1004.0029

packets, and so forth. These other devices can be disposed in various compartments within the tray (100).

[098] At step 1109, the tray (100) is sealed. This can be accomplished by folding a CSR wrap about the tray (100). In such an embodiment, the CSR wrap can be used during the catheter insertion procedure as well. At optional step 1110, the manufacturer can enclose printed instructions (1001). In one embodiment, the printed instructions (1001) will direct a user to discharge contents of at least one syringe into the first compartment (101) and to pass at least a portion of the catheter assembly (700) through the opening and into the contents to lubricate the catheter.

[099] At step 1111, the manufacturer can place a sterile wrap about the tray (100) and the printed instructions (1001), where included. A sticker or other sealing device can be applied that indicates the contents to be sterile as well. At step 1112, the completed assembly can be shipped to a medical services provider.

[0100] Turning now to FIGS. 22-30, illustrated therein is a method of packaging a catheter assembly and corresponding tray in accordance with embodiments of the invention. FIGS. 22-30 illustrate one exemplary method graphically, which each figure representing one or more steps of the method, as the illustrations serve to better explain these steps than would a flow chart or other diagram. While FIGS. 22-30 illustrate one method of packaging a tray and catheter assembly, it will be clear to those of ordinary skill in the art having the benefit of this disclosure that other methods can be used as well. Further, in creating this article of manufacture, i.e., the packaged catheter assembly, the steps of FIGS. 22-30 may be either manual or automated. A person can execute the steps to create the article of manufacture in one embodiment. Alternatively, industrial machinery, equipment, and robotics can be designed and programmed to execute the steps with the assistance of one or more processors and executable instructions stored in memory.

Bard Exhibit 1004.0030

[0101] Beginning with FIG. 22, in this step, a tray 100 is provided. The tray includes at least one compartment, such as the first compartment 101 that is configured for receiving the catheter assembly 700. As described above, the tray 100 can include additional compartments as well, such as those for receiving syringes, specimen jars, and so forth.

[0102] At this step, the catheter assembly 700 is placed within the first compartment 101 as previously described. The tray is then placed upon one or more layers of wrap material 2200. In one embodiment, the wrap material 2200 can be CSR wrap. For example, in the illustrative embodiment of FIG. 22, the wrap material 2200 comprises a white layer of CSR wrap measuring 24 inches square. As previously noted, other materials can be used as well, including plastic materials, cotton materials, paper materials, synthetic materials and so forth. The wrap material 2200 can be of different shapes and sizes as well.

[0103] While the tray 100 can be sealed with a simple layer of plastic adhered to the top of the tray 100, providing the wrap material 2200 can be advantageous in many applications. For example, as will be explained below with respect to FIGS. 31-33, when the wrap material 2200 is a medically usable material, such as CSR wrap, a medical services provider may unfold the wrap about the tray 100 to create a sterile field for the catheterization procedure. For this reason, one or more layers of wrap material 2200 are simply folded about the tray 100 in this illustrative embodiment.

[0104] Note that for reference and ease of explanation, the tray 100 will be described as having four sides: a first side 2201, a second side 2202, a third side 2203, and a fourth side 2204. As these sides will not be visible in every view, due to the folding of the wrap material 2200 about the tray 100, they are initially noted here. Note that four sides are used because the illustrative tray 100 is rectangular in shape. Were the tray a triangle, there would be three sides. Were the tray ovular or circular, there would be an infinite number of sides.

Bard Exhibit 1004.0031

[0105] Turning now to FIG. 22, at this step a first portion 2301 of the one or more layers of wrap material 2200 is folded about a first side (2201) of the tray 100. In this illustrative embodiment, the tray 100 is oriented at a rotation of approximately forty-five degrees relative to the one or more layers of wrap material 2200, with both the wrap material 2200 and the tray 100 being rectangular in shape. As such, the first portion 2301 comprises a first corner of the wrap material 2200. It will be clear to those of ordinary skill in the art having the benefit of this disclosure, however, that embodiments of the invention are not so limited. For example, the wrap material 2200 can be configured as a circle or oval. Executing the step shown in FIG. 22, a first portion of that material could be folded about a first side of the tray 100 in similar fashion.

[0106] Turning to FIG. 23, illustrated therein is an optional step that can be included in the method of packaging the catheter assembly. As noted above, in one embodiment the one or more layers of wrap material 2200 can be unfolded to create a sterile field about the tray 100. A patient can be placed atop this sterile field for the catheterization procedure. Even if the surface below the wrap material 2200 is also sterile, the use of the wrap material 2200 as a foundation for the procedure further ensures that the sterile field will not be breached.

[0107] Turning now to FIG. 24, to help ensure that the health care provider does not inadvertently breach the sterile field, in one embodiment a package of liquid hand sanitizer 2401 or other cleanser and/or a package of rubber gloves 2402 may be included. Alternatively, other medical implements such as alcohol wipes or other materials could be enclosed as well. In such an embodiment, upon opening the packaged catheter assembly, the health care services provider may – before ever touching the catheter assembly or tray contents – apply the liquid hand sanitizer 2401 to their hands and dawn rubber gloves. The inclusion of these accessories in the packaging eliminates the need for the health care services provider to have to leave the sterile field to wash their hands, obtain gloves, and so forth.

Bard Exhibit 1004.0032

[0108] In the illustrative embodiment of FIG. 23, the package of liquid hand sanitizer 2401 and package of rubber gloves 2402 are simply placed atop the first portion 2301 of the one or more layers of wrap material 2200. As will be shown below, they will be held in place by other portions of the one or more layers of wrap material 2200 by way of subsequent folding steps. Other methods of holding them in place, including light adhesives or the design of pockets in the one or more layers of wrap material 2200 may also be used. The sanitizer 2401 and gloves 2402 are shown placed atop the first portion 2301, but may be alternatively placed atop, and therefore outside of the sterile field, other layers of the wrap as well, (for example, 2501, 2601, 2801 or the like).

[0109] Turning now to FIG. 25, at this step a second portion 2501 of the one or more layers of wrap material 2200 is folded about a second side (2202) of the tray 100. Where the optional package of liquid hand sanitizer 2401 and package of rubber gloves 2402 are included, the second portion 2501 of the one or more layers of wrap material 2200 may be folded so as to cover or partially cover these items.

[0110] Turning now to FIG. 26, at this step of the method a third portion 2601 of the one or more layers of wrap material 2200 is folded about a second side (2203) of the tray 100. Where the optional package of liquid hand sanitizer 2401 and package of rubber gloves 2402 are included, the third portion 2601 of the one or more layers of wrap material 2200 may be folded so as to cover or partially cover these items.

[0111] Turning now to FIG. 27, illustrated therein is another optional step of the method of packaging the catheter assembly and tray. In many catheterization procedures, a first layer of material will be placed under the patient, while a second layer of material is placed atop the patient. For such applications, the packaged catheter assembly can include an additional layer of wrap material 2701. In the illustrative embodiment of FIG. 25, the additional layer of wrap

material 2701 comprises a folded layer of CSR wrap measuring 17 by 17.5 inches. The additional layer of wrap material 2701 in this illustrative embodiment is folded as a 4 by 2 matrix.

[0112] The one or more layers of wrap material 2200 and the additional layer of wrap material 2701 can be the same type of material. Alternatively, the one or more layers of wrap material 2200 and the additional layer of wrap material 2701 can be different. In one embodiment, for example, the additional layer of wrap material 2701 can be a fenestrated wrap with one or more pre-formed openings suited to the catheterization procedure.

[0113] In one embodiment, the additional layer of wrap material 2701 is configured to be visibly distinguishable from the one or more layers of wrap material 2200. For example, in one embodiment, the additional layer of wrap material 2701 is a different color than the one or more layers of wrap material 2200. The one or more layers of wrap material 2200 can be white, for instance, while the additional layer of wrap material 2701 can be light blue or light green. Other color combinations can equally be used.

[0114] As with the package of liquid hand sanitizer 2401 and package of rubber gloves 2402, in one embodiment the additional layer of wrap material 2701 can be placed atop portions of the one or more layers of wrap material 2200. In such an embodiment, the additional layer of wrap material 2701 can be held in place by way of subsequent folding steps, as the additional layer of wrap material 2701 is disposed along other folded portions of the one or more layers of wrap material 2200 prior to folding a fourth portion of the one or more layers of wrap material about the fourth side (2204) of the tray (100).

[0115] As will be shown below, medical procedure kits configured in accordance with embodiments of the invention can include printed instructions. The printed instructions can include a patient portion and a health care services provider portion. The health care services provider portion can include information such as how to use the medical procedure kit, what is included therein, checklists, and so forth. The patient portion can include helpful information for

Bard Exhibit 1004.0034

the patient, such as information about the procedure, questions to ask, and post procedure care suggestions. These two portions can be detachably coupled together. Alternatively, they can be separate.

[0116] In one embodiment of the invention where the health care services portion of the printed instructions are physically separated from the patient portion, it can be advantageous to stage the various portions at different locations within the assembled medical procedure kit. One advantage offered by embodiments of the invention is that the medical devices and implements can be staged within the kit in accordance with an order of use. Accordingly, the health care services provider can draw out each device in order of use.

[0117] Turning now briefly to FIG. 34, illustrated therein is an alternate embodiment of the stage shown in FIG. 27. The embodiment of FIG. 34 is well suited to situations in which the health care services portion is physically separated from the patient portion.

[0118] In FIG. 34, another optional step corresponding to a method of packaging a medical procedure kit is shown. As with FIG. 27, the medical procedure kit of FIG. 34 illustrates a packaged catheter assembly. Also as with FIG. 27, the packaged catheter assembly can include an additional layer of material 2701, which may be a patient drape, under-buttocks drape, or a combination thereof disposed within one or more layers of wrap material 2200. As noted above, the additional layer of material 2701 can be configured to be visibly distinguishable from the one or more layers of wrap material 2200. For example, in one embodiment, the additional layer of material 2701 is a different color than the one or more layers of wrap material 2200.

[0119] The package of liquid hand sanitizer 2401 and package of rubber gloves 2402, optionally the additional layer of material 2701, and the separated health care services portion 3401 of the printed instructions can be placed atop portions of the one or more layers of wrap material 2200. In such an embodiment, the package of liquid hand sanitizer 2401, the rubber gloves 2402, the additional layer of material 2701, and the separated health care services portion 3401 can be held

Bard Exhibit 1004.0035

in place by way of subsequent folding steps, as they are disposed along other folded portions of the one or more layers of wrap material 2200 prior to folding a fourth portion of the one or more layers of wrap material about the fourth side (2204) of the tray (100). Accordingly, the health care services provider will be readily able to access these devices after unfolding a single fold of the one or more layers of wrap material 2200.

[0120] Turning now to FIG. 28, the tray (100) is enclosed in the one or more layers of wrap material 2200 by folding a fourth portion 2801 of the one or more layers of wrap material 2200 about a fourth side (2204) of the tray (100) and then tucking at least one of the first portion (2301), the second portion (2501), the third portion (2601), or the fourth portion 2801 of the one or more layers of wrap material 2200 beneath at least another of the first portion (2301), the second portion (2501), the third portion (2601), or the fourth portion 2801 of the layer of wrap material 2200. In the illustrative embodiment of FIG. 28, a part of the fourth portion 2801 is tucked beneath parts of each of the (2301), the second portion (2501), and the third portion (2601). This step of tucking encloses both the additional layer of wrap material 2701 and the package of liquid hand sanitizer (2401) and the package of gloves (2402) within the one or more layers of wrap material 2200.

[0121] Turning briefly to FIG. 35, illustrated therein is a variation of FIG. 28 in which the printed instructions include a health care services portion and a patient portion, wherein these portions are separate. In FIG. 35, as with FIG. 28, the tray (100) is enclosed in the one or more layers of wrap material 2200 by folding a fourth portion 2801 of the one or more layers of wrap material 2200 about a fourth side (2204) of the tray (100) and then tucking at least one of the first portion (2301), the second portion (2501), the third portion (2601), or the fourth portion 2801 of the one or more layers of wrap material 2200 beneath at least another of the first portion (2301), the second portion (2501), the third portion (2601), or the fourth portion 2801 of the layer of wrap material 2200. The separated health care services portion 3401 of the printed instructions is thus tucked within the fourth portion 2801.

[0122] The separated patient portion 3501 is then placed atop the fourth portion 2801. The health care services provider is therefore able to access the separated patient portion 3501 and deliver it to, and possibly discuss it with, a patient prior to unfolding the fourth portion 2801. The step of tucking shown in FIG. 34 encloses each of the additional layer of wrap material 2701, the separated health care services portion 3401, the package of liquid hand sanitizer (2401) and the package of gloves (2402) within the one or more layers of wrap material 2200, while leaving the patient portion 3501 outside the various folds of the one or more layers of wrap material 2200.

[0123] Turning now to FIG. 29, the packaged catheter assembly 2901 can be sealed in a bag 2902 as was described in FIG. 10. Prior to depositing the packaged catheter assembly 2901 into the bag 2902, optional printed instructions 1001 can be attached to or disposed upon the packaged catheter assembly 2901 as well. As with FIG. 10, the printed instructions 1001 can include a health care services portion and a patient portion as shown in FIGS. 12-13. The instructions can include pictures or illustrations showing visually how the various steps should be done as well.

[0124] Turning briefly to FIG. 36, illustrated therein is an alternative to FIG. 29, which is used when printed instructions including a health care services provider portion and a patient portion, each physically separate from the other, is included. In FIG. 36, the packaged catheter assembly 2901 having the tucked-in, separated health care services portion 3401 of the printed instructions is sealed in a packaging material. The packaging material of FIG. 36 is illustratively shown as a bag 2902.

[0125] Prior to depositing the packaged catheter assembly 2901 into the bag 2902, the separated patient portion 3501 of the optional printed instructions can be attached to or disposed upon the packaged catheter assembly 2901 as described in FIG. 35.

[0126] Once the printed instructions 1001 have been affixed to, or placed with or atop the packaged catheter assembly 2901, as in either FIG. 29 or 36, the assembly can be sealed in a sterile wrap such as a bag 2902, which may be thermally or otherwise sealed. The completed

Bard Exhibit 1004.0037

assembly 3001 is shown in FIGS. 30 and 37, where an outer packaging material is shown. In FIGS. 30 and 37, the outer packaging material is a thermally sealed bag 2902. It will be understood that this outer packaging is but one embodiment of the various packaging materials that can be used in accordance with embodiments of the invention. In FIGS. 30 and 37, the thermally sealed bag 2902 optionally includes a preformed opening 3002. For example, in one embodiment, the preformed opening 3002 can include one or more tabs that a health care services provider is instructed to pull to open the bag 2902. Inclusion of a sterile wrap not only keeps the contents within the bag sterile, but also allows the printed instructions 1001 to be included with the tray assembly, yet outside the one or more layers of wrap material (2200).

[0127] Turning back to FIG. 29, in one embodiment the printed instructions 1001 are disposed atop the one or more layers of wrap material 2200 such that the health care services portion of the printed instructions 1001 is disposed on the top of the printed instructions 1001, with the patient portion being disposed adjacent to the one or more layers of wrap material 2200. As with FIG. 10, additional instruction materials may be included with the completed assembly as well. For example, in one embodiment an adhesive instruction tag 1003 can be affixed to the bag 2902.

[0128] Turning now to FIGS. 38 and 39, illustrated therein are steps of method of assembling yet another embodiment of medical procedure kit in accordance with embodiments of the invention. In FIGS. 38 and 39, the printed instructions are physically separated into a patient portion 3801 and a health care services provider portion 3802, as was the case in FIGS. 34-37. However, unlike FIGS. 34-37, the embodiment of FIGS. 38 and 39 has the health care services provider portion 3802 configured as an adhesive label with the checklist 1003 forming an extension thereof. Further, as will be shown in more detail in FIG. 40, the health care services provider portion 3802 has a picture of the contents of the medical procedure kit on the top, and has a peelable flap 3803 that may be opened to reveal instructions and other indicia therein.

[0129] Another difference in the embodiment of FIGS. 38 and 39 involves the patient portion 3801. While some embodiments provide a patient portion that is very straight-forward,

Bard Exhibit 1004.0038

informational, and clinical in nature, in the embodiment of FIGS. 38 and 39, the patient portion 3801 is configured as a greeting card. Experimental testing has shown that when the patient portion is configured as an instruction or informational sheet, it is less likely that the patient portion will be delivered to the patient. However, by configuring the patient portion 3801 as a greeting card, such as with a pleasant picture of flowers or similar objects on the front and stylized text providing the information therein, it is more likely to be given to the patient. The patient portion 3801 will be described in more detail below.

[0130] Beginning with FIG. 38, illustrated therein is an exploded view of a tray 100 suitable for use in a medical procedure kit. The tray 100 has the catheter assembly 700, a pair of syringes 701,702, and a specimen container 703 disposed therein. While only a specimen container 703 is shown as being disposed in the third compartment, note that additional items could also be included within the third compartment, including swab sticks. Other devices could also be inserted into the tray 100 in various compartments as well. For example, in one embodiment, a catheter securement device, and a Foley insertion tag can be inserted into the second compartment 102. Also, note that the pair of syringes 701,702 can be configured as shown in FIG. 38, or alternatively can be both inserted in the first compartment, as described above. In the configuration of FIG. 38, rather than having both syringes 701,702 disposed within the first compartment 101, one syringe 702 is disposed laterally in the first opening 121 and the second opening 122 of the first barrier 105 and second barrier 106, respectively. This configuration is illustrative only.

[0131] Once the necessary components are disposed within the tray 100, the tray can be enclosed with a wrap 1000. The wrap 1000 can be one or more layers in number, and further can be any of a number of types of material. In one embodiment, the wrap 1000 comprises a CSR wrap.

[0132] Using a CSR wrap as an illustrative example, in one embodiment as indicated in FIG. 38, the CSR wrap 1000 is folded about the tray 100 for sealing, and can be correspondingly unfolded to reveal the tray 100 and other implements. Once unfolded, the CSR wrap 1000 can then be used

Bard Exhibit 1004.0039

in the catheter insertion process. For example, an unfolded CSR wrap 1000 can be used to provide a sterile field in which the tray 100 sits for unloading and subsequent use. This process is explained in more detail in the discussion of FIGS. 22-30.

[0133] Printed instructions can then be attached to, disposed upon, or disposed within the tray 100. In the illustrative embodiment of FIG. 38, the printed instructions are configured as a physically separate health care services portion 3802 and a patient portion 3801, as will be shown in more detail in FIGS. 40-41 below. The health care services portion 3802 can include instructions telling the health care services provider, for example, how to set up a sterile or otherwise clean work environment, how to prepare the catheter assembly 700 disposed within the tray, how to use the other devices within the tray, how to insert the catheter, how to secure the drainage bag to the catheter, how to empty the drainage bag, how to obtain a urine sample, and so forth. The instructions can include pictures or illustrations showing visually how the various steps should be done as well.

[0134] In the embodiment of FIG. 38, the health care services portion 3802 is configured with a checklist 1003 extending therefrom. Further, the health care services portion 3802 includes, in one embodiment, a photograph of the contents disposed within the medical procedure kit. When viewing the health care services portion 3802 from the top, the health care services provider is able to easily inventory what contents are disposed therein.

[0135] In one embodiment, the health care services portion 3802 includes a peelable flap 3803. By pulling back the peelable flap 3803, the health care services portion 3802 opens to reveal instructions and other information therein. For example, in one embodiment, the interior of the health care services portion 3802 can include one or more of the panels shown in FIGS. 15-19. In one embodiment, the health care services portion 3802 may include an instruction for the health care services provider to give the patient portion 3801 to the patient, and in one embodiment, insructions to discuss the patient portion 3801 with the patient.

Bard Exhibit 1004.0040

[0136] The patient portion 3801 can include helpful suggestions or instructions for the patient. The patient portion 3801 can be configured as a greeting card to make the information more pleasantly received by a patient. Examples of suggestions or instructions that may be included in the patient portion include information on what a catheter is, what the patient should understand about the catheter, how to reduce the chance of getting an infection, information about infections commonly associated with catheters, symptoms of infections commonly associated with catheters, and suggestions for home use of the catheter assembly 700.

[0137] In the embodiment of FIG. 38, the patient portion 3801 is disposed within the packaging 3804, while the health care provider portion 3803 is affixed to the outside of the packaging 3804. As with FIG. 34, the medical procedure kit of FIG. 38 can include an additional layer of wrap material 2701 disposed within one or more layers of wrap material 2200. As noted above, the additional layer of wrap material 2701 can be configured to be visibly distinguishable from the one or more layers of wrap material 2200. For example, in one embodiment, the additional layer of wrap material 2701 is a different color than the one or more layers of wrap material 2200.

[0138] The package of liquid hand sanitizer and package of rubber gloves described above (not shown in FIG. 38 for simplicity) can then be placed under the additional layer of wrap material 2701. The patient portion 3801 can be placed atop the additional layer of wrap material 2701. In such an embodiment, the package of liquid hand sanitizer (where used), the rubber gloves (where used), the additional layer of wrap material 2701, and the patient portion 3801 can be held in place by way of a final folding step 3805. Accordingly, they will be held in place by a folded portion 3806. The health care services provider will be readily able to access these implements after unfolding the folded portion 3806 shown in FIG. 38.

[0139] The health care services portion 3802 can be affixed to the packaging 3804. The packaging 3804 can optionally include a preformed opening. For example, in one embodiment,

Bard Exhibit 1004.0041

the opening can include one or more tabs that a health care services provider is instructed to pull to open the packaging 3804.

[0140] Turning now to FIG. 39, illustrated therein is the medical procedure kit 3901 of FIG. 38 having the patient portion 3802 tucked-into the one or more layers of wrap 2200. The health care services portion 3802 is affixed to the packaging 3804. The packaging 3804 of FIG. 39 is illustratively shown as a thermally or adhesively sealed bag.

[0141] Turning now to FIGS 12-13, illustrated therein is one embodiment of the printed instructions 1001 in accordance with embodiments of the invention. The printed instructions 1001 can be configured as an instruction manual suitable for inclusion with a tray (100) as described above. FIG. 12 illustrates a view of a first side of the instruction manual, while FIG. 13 illustrates a view of a second side of the instruction manual.

[0142] In one embodiment, the printed instructions 1001 are configured as a two-portion instruction manual having a health care services portion 1201 and a patient portion 1202. In the illustrative embodiment of FIGS. 12-13, the patient portion 1202 is detachably coupled to the health care services portion 1201, and is thus separated from the health care services portion 1201, by a perforation 1203. For example, where the printed instructions 1001 are configured as a printed material on a paper-based stock, the perforation 1203 can be a perforated line running along a dimension of the printed instructions 1001 such that the printed instructions 1001 can be easily torn along the perforation 1203 to separate the patient portion 1202 from the health care services portion 1201. Note that the embodiment of FIGS. 12 and 13 is but one illustrative embodiment of the invention. The patient portion 1202 need not be detachably coupled to the health care services portion 1201. As will be shown in FIGS. 27-34 below, the patient portion 1202 may be physically separate from the health care services portion 1201 as well. In the separated configuration, the health care services portion 1201 and patient portion 1202 can be disposed at different locations within a medical procedure kit.

Bard Exhibit 1004.0042

[0143] In one embodiment, the printed instructions 1001 are configured as a plurality of panels 1204,1205,1206,1301,1302,1303. As will be shown in FIG. 20, in one embodiment the printed instructions 1001 can be configured as an instruction manual that is formed with an accordion-style fold, with each of the panels 1204,1205,1206,1301,1302,1303 forming a page of the instruction manual. In the illustrative embodiment of FIGS. 12-13, panels 1204,1205 and panels 1301,1302 form the health care services portion 1201, while panels 1206,1303 form the patient portion. Panels 1206,1303 are separated from panels 1204,1205 and panels 1301,1302 by the perforation 1203 such that the patient portion 1202 is tearably separable from the health care services portion 1201.

[0144] In one embodiment, the health care services portion 1201 includes instructions 1304 for using the catheter assembly and other corresponding medical devices disposed within the accompanying tray. The instructions 1304 can include text and/or figures or illustrations showing how to use the catheter assembly and corresponding medical devices on the patient, as well as instructions on preparation, taking samples, preventing infection, and so forth. The instructions 1304, in one embodiment, also include an instruction to detach the patient portion 1202, give the patient portion 1202 to the patient, as well as an instruction to discuss the information disposed on the patient portion 1202 with the patient.

[0145] Similarly, the patient portion 1202 may also include instructions 1305 and/or helpful suggestions for the patient who is undergoing the catheterization procedure. For instance, this information can include any one or more of the following: a description of what a catheter is, what the patient should know about the catheter, how to reduce the chance of getting an infection from the catheterization procedure, what infections commonly associated with catheterization procedures typically are, the symptoms associated with infections commonly associated with catheterization procedures, and information about using the catheter at home. Additionally, the patient portion 1202 may include custom information as well. For example, in one embodiment the patient portion 1202 includes an informational section configured such that the health care

service provider's name and contact information can be written thereon. It will be clear to those of ordinary skill in the art having the benefit of this disclosure that the invention is not so limited. For example, additional types of health care service instructions or patient instructions or suggestions can also be included.

[0146] Turning now to FIGS. 14-19, illustrated therein are exemplary panels 1204,1205,1206,1301,1302,1303. These panels 1204,1205,1206,1301,1302,1303 are intended to illustrate exemplary instructions for the health care services portion (1201) and patient portion (1202) of an illustrative instruction manual for a catheter assembly and corresponding medical devices included with an accompanying tray (100). It will be clear that these panels 1204,1205,1206,1301,1302,1303 and the information printed thereon can be varied in any number of ways without departing from the spirit and scope of the invention as described herein and recited in the following claims. For example, the number of panels can be varied. Additionally, the information printed thereon can be condensed, expanded, or altered without departing from the spirit and scope of the invention. Also, the exemplary information may be moved from the panels shown to other panels, as a particular application may warrant.

[0147] Beginning with FIG. 14, illustrated therein is one exemplary panel 1204. In one embodiment, panel 1204 will be configured such that when the catheter package assembly within which the instruction manual is disposed is initially opened, panel 1204 will be readily viewable. For example, where the catheter package assembly is assembled as shown in FIG. 10 above, once the sterile wrap (1002) is removed, the panel 1204 will be viewable prior to removal of the CSR wrap (1000).

[0148] Panel 1204 can include general information about the catheter assembly and corresponding medical devices disposed within the tray. For example, this information can include part number information 1401, trade name information 1402, and manufacturer information 1403. A diagram 1404 of the contents of the package assembly may be included as well. The illustrative diagram 1404 of FIG. 14 illustrates a tray 100 having a catheter assembly

Bard Exhibit 1004.0044

700 and corresponding medical devices disposed therein. The corresponding medical devices of this illustrative embodiment include a pair of syringes 701,702 and a specimen container 703. Additionally swab sticks 1408, a catheter securement deice 1409, a Foley insert tag 1410, vinyl gloves 1411, a fenestrated drape 1412, an underbuttocks drape 1413, and a hand sanitizer 1414 solution or wipe are disposed within the tray 100.

[0149] In addition to a diagram 1404, panel 1204 can also include a written description 1407 of the elements included in the tray 100. Further, sterility information 1407 can be included. Panel 1204 can even include instructional material 1406 on how to use the instruction manual as well.

[0150] Turning now to FIG. 15, illustrated therein is one embodiment of panel 1301. As will be described below with respect to FIG. 20, in one embodiment the printed instructions (1001) are configured as an accordion-style folded instruction manual. In such a configuration, panel 1301 can be disposed on the back of panel 1204. Panel 1301 will therefore be visible upon a health care services provider opening the instruction manual.

[0151] Panel 1301 can include instructions for using the catheter assembly and the corresponding medical devices. As can be seen from this illustrative embodiment, panel 1301 can include instructions for setting up a clean work area. The instructions can include text, pictures, illustrations, or combinations of these.

[0152] In one embodiment, the instructions for setting up a clean work area include a hygiene performance step 1501, which may include instructions to wash hands, optionally put on gloves (which at this step can be non-sterile gloves), and so froth. The instructions may then include information on opening the remainder of the catheter package assembly. For instance, in FIG. 15 step 1502 indicates that the health care provider should remove the CSR wrap (1000), which in this case is folded about the tray (100). Note that in this illustrative embodiment, as the CSR wrap (1000) is folded about the tray (100), removal of the CSR wrap (1000) by unfolding creates a sterile field about the tray (100).

Bard Exhibit 1004.0045

[0153] Step 1503 then instructs the health care provide to pick up the underbuttocks of the patient and to place the underbuttocks wrap beneath the patient. Step 1504 then instructs the health care provider to use the hand sanitizing solution provided with the catheter package assembly.

[0154] As with other panels shown in FIGS. 14-19, the various panels may include suggestions 1505 for preventing a catheter associated urinary tract infection. Some of this information is illustratively shown in FIG. 15. It will be understood that this information can be placed on one or more panels.

[0155] In addition to information for setting up a clean work area, in one embodiment panel 1301 includes instructions for preparing the catheter assembly (700) as well. For example, step 1506 instructs the health care services provider to don sterile gloves, as the hands were sanitized at step 1504. Step 1507 tells the health care services provider to place the fenestrated drape with a shiny side down on the patient without contaminating the sterile gloves donned at step 1506. Step 1508 instructs the health care services provider to test the balloon of the catheter assembly with the water-filled syringe stored in the first compartment. Step 1508 also instructs the health care services provider to leave the syringe connected to the catheter assembly.

[0156] Step 1509 then provides instructions on using the first compartment of the tray as a lubricant application chamber as described above. Specifically, in this illustrative embodiment, step 1509 instructs the health care services provider to inject the lubricating jelly found in the second syringe of the first compartment into the first compartment. Step 1509 also instructs the health care services provider to pass the tip of the catheter through the first opening in the wall separating the first compartment and second compartment into the lubricating jelly, thereby lubricating the tip of the catheter.

[0157] Turning now to FIG. 16, illustrated therein is an exemplary embodiment of panel 1302. The instructions printed thereon continue to provide the health care services provider with

Bard Exhibit 1004.0046

information regarding use of the catheter assembly. For example, in one embodiment, this information includes instructions on inserting the catheter.

[0158] At step 1601, the instructions direct the health care services provider to tear open the swab stick package and to use the swab sticks to clean the patient from the top down. The instruction also notes that each swab stick is intended for one use only to properly maintain the sterile field. Step 1602 directs the health care services provider to initiate the catheterization process by inserting the catheter assembly into the patient. Steps 1603 and 1604 continue this process as shown in FIG. 16.

[0159] Step 1605 directs the health care services provider to secure the drainage bag to the catheter assembly. Step 1606 directs the health care services provider to clean up upon completion of the catheterization process. Step 1607 provides instructions on completing the label on the Foley insertion tag included with the catheter package assembly and attaching it to the tubing or drain bag attached to the catheter assembly.

[0160] At step 1608, the health care services provider is instructed to detach the patient portion (1202) from the health care services portion (1201) by tearing the two apart along the perforation (1203). Step 1609 further instructs the health care services provider to discuss the patient information printed upon the patient portion (1202) with the patient. Step 1609 instructs that documentation of the entire procedure should be completed.

[0161] Turning now to FIG. 17, illustrate therein is one embodiment of panel 1303, which represents a first side of the patient portion (1202). This panel 1303 includes information 1701 describing what a catheter is and why a catheter might be used. The panel 1303 also includes information 1702 describing what the patient should know regarding catheters and catheter use. For example, this information 1702 might notify the patient that the health care services provider should wash hands prior to inserting the catheter, and that it is acceptable to ask them to do so if they have not done so before the patient.

Bard Exhibit 1004.0047

[0162] The panel 1303 also includes information 1703 regarding how the patient can reduce the chances of getting an infection. This information 1703 can include a statement that the patient should wash their hands prior to touching the catheter assembly. The information 1703 may also include a statement that the drainage bag should always be kept at a level beneath the patient's navel, and that the patient should inform a helper when the bag is more than half full.

[0163] Turning to FIG. 18, illustrated therein is one embodiment of panel 1206. In this illustrative embodiment, panel 1206 forms the second side of the patient portion (1202) of the instruction manual, and accordingly, includes additional information that a patient may wish to know when using a catheter assembly.

[0164] By way of example, information 1801 informs the patient as to what common infections associated with catheter use are and how they are contracted. Information 1802 provides symptoms of these common infections, such as fever, blood in the urine, burning or painful urination, or frequent or more urgent urination after catheter removal. Information 1803 informs the patient of what they should know prior to going home after a catheter procedure.

[0165] Information 1804 comprises an informational section configured such that a health care provider's name and contact information may be written thereon. This is helpful to the patient in the event that the symptoms recited in information 1802 should arise after the procedure, in that the patient has readily available access to the information required to contact a physician or other health care provider. An advantage of having this information 1804 on the patient portion (1202) when the patient portion (1202) is detachable is that the patient can take it with them upon completion of the procedure.

[0166] Turning now to FIG. 19, which is a portion of the health care services portion (1201), illustrated therein is one embodiment of panel 1205 that provides additional health services information. For example, information 1901 for emptying the drain bag and information 1902 describing how to obtain a urine sample can be included.

Bard Exhibit 1004.0048

[0167] Turning now to FIG. 20, illustrated therein is one physical configuration in which the printed instructions 1001 can be delivered along with the catheter package assembly in accordance with embodiments of the invention. FIG. 20 is but one of many configurations, and embodiments of the invention are not to be limited in this respect, as FIG. 20 is illustrative only.

[0168] In FIG. 20, the printed instructions 1001 are configured as a tri-section, accordion style bi-folded panel. Three sections 2000,2001,2002 are folded in an accordion style, with two folds 2003,2004 existing between the sections 2000,2001,2002. When the printed instructions 1001 are configured as shown in FIGS. 12-13, folding the printed instructions 1001 in this manner allows the health care services portion 1201 to be disposed atop the patient portion 1202. Further, when the printed instructions are disposed atop a CSR wrap (1000) as shown in FIG. 10, by disposing the patient portion 1202 adjacent to the CSR wrap (1000), the health care services provider removing the sterile wrap (1002) off of the catheter package assembly will be assured of seeing the health care services portion 1201 first.

[0169] Turning now to FIG. 40, illustrated therein is an alternate embodiment of printed instructions 4000 configured in accordance with embodiments of the invention. The printed instructions 4000 of FIG. 40 are suitable for use as the health care services portion (3802) of FIGS. 38-39, in that it can be configured as an adhesive label with a peelable flap 4001. Further, the illustrative embodiment includes a checklist 4002 as described above in FIG. 38.

[0170] In the embodiment of FIG. 40, the top cover of the printed instructions 4000 include a picture 4003 of the contents of the medical procedure kit. In one embodiment, the picture 4003 is a color photograph set on a black background to make visibility simple. Above the picture is a title bar 4004. In one embodiment, the title bar 4004 tells a health care services provider what type of medical procedure kit is disposed therein, and is white text on a blue background.

[0171] A flap indicator 4005 indicates that more information is located within the printed instructions 4000. The additional information, which can be one or more of the panels shown in

Bard Exhibit 1004.0049

FIGS. 15-19 above, can be accessed by the peelable flap 4001. In one embodiment, the flap indicator is configured with black text on a yellow background.

[0172] The checklist 4002 can be configured as described above. In the embodiment of FIG. 40, a red warning bar 4006 having white text thereon is disposed above a checklist section 4007 that is yellow, having black text and white check boxes in this illustrative embodiment.

[0173] Turning now to FIG. 41, illustrated therein is one embodiment of a patient portion 3801 configured as a greeting card as was described with FIGS. 38-39. The patient portion 3801 in this illustrative embodiment includes an inspirational phrase 4103 on the front cover, along with an aesthetically pleasing image 4101. The aesthetically pleasing image 4101 of FIG. 41 is a vase of flowers, although it will be clear to those of ordinary skill in the art having the benefit of this disclosure that embodiments of the invention are not so limited. Other aesthetically pleasing images include puppies, sunsets, mountain streams, and so forth. The bottom of the patient portion 3801 includes in identifier 4103 that tells the patient the purpose of the patient portion 3801.

[0174] The interior of the patient portion 3801 can include text. For example, in one embodiment where the patient portion 3801 is to be included with a catheter assembly, the interior includes the following illustrative text:

[0175] Here is some simple information about foley catheterization:

[0176] 1. What is a Urinary Catheter?

[0177] A thin flexible tube that drains urine from the bladder into a collection bag. The catheter helps:

[0178] When you can't urinate.

[0179] To measure how much urine you're producing.

[0180] During and after some surgeries or tests.

[0181] 2. What should you know about your catheter?

[0182] Only a trained technician inserts a catheter when necessary, and it is removed as soon as possible.

[0183] Caregivers must wash hands with soap or use alcohol-based rubs before and after touching your catheter.

[0184] If your caregivers don't clean their hands, politely ask them to.

[0185] Do not disconnect the catheter yourself.

[0186] Inquire every day whether you still need the catheter.

[0187] 3. What is 'catheter-associated' urinary tract infection (CAUTI)?

[0188] If a catheter introduces 'outside' germs into your urinary tract, they can cause an invention. If a UTI is acquired, you may experience:

[0189] Sudden fever and/or bloody urine.

[0190] Burning or painful urination, or pain below the stomach.

[0191] Frequent, or more urgent, urinating after catheter is removed.

[0192] Tell your provider right away. An antibiotic may be needed.

[0193] 4. Can you reduce your chances of an infection? Absolutely!

[0194] Wash your hands before and after touching your catheter.

[0195] Make sure the tube is secured to your leg. Never twist, or tug on it.

[0196] Always keep the collection bag below the level of your belly button.

[0197] Do not disconnect the catheter yourself.

[0198] Ask your doctor every day whether you still nee the catheter.

[0199] The above information on the patient portion 3801 can be printed in multiple languages, such as in Spanish or in English. Where two languages are used, the back portion may be the same as the image shown in FIG. 41, but with the inspirational phrase 4102 and identifier 4103 set forth in a different language. Further, alternatives and variations of the information can be substituted for the example set forth above.

[0200] Turning now to FIG. 21, illustrated therein is a method 2100 of using the printed instructions (1001) as described herein. At step 2101, a health care services provider removes the sterile wrap (1002) disposed about the catheter package assembly. Where the catheter package assembly is configured as shown in FIG. 10, removal of the sterile wrap (1002) will reveal the printed instructions (1001). Where the printed instructions (1001) are configured as described in FIG. 20, with the patient portion (1202) disposed adjacent to the CSR wrap (1000), the health care services provider will see the health care services portion (1201) first.

[0201] At step 2102, the health care services provider accesses the printed instructions (1001) and begins to read the panels, which in one embodiment are panels configured in accordance with those described in FIGS. 14-19 above.

[0202] At step 2103, the health care services provider unfolds the outer CSR wrap (1000), which in one embodiment is then used to create a sterile field about the tray (100). At step 2104, the health care services provider prepares the workspace, which in one embodiment may be in accordance with steps (1501,1502,1503,1504) of panel (1301) in FIG. 15. For example, this may include donning non-sterile gloves, as shown at step (1501) of FIG. 15. This may further include picking up the underbuttocks drape, included with the tray (100), by the edge without contaminating the contents and placing the shiny side down under the area of the patient to be prepped as shown at step (1503) of FIG. 15. This may further include using the hand sanitizer as shown at step (1504 of FIG. 15.

[0203] At step 2105, the health care services provider prepares the catheter, which in one embodiment may be in accordance with steps (1506,1507,1508,1509) of panel (1301) as described in FIG. 15. For example, this can include donning sterile gloves as shown at step (1506) of FIG. 15. This may include placing a fenestrated drape, included with the tray (100), with the shiny side down on the patient without contaminating the sterile gloves, as shown at step (1507) of FIG. 15. This may include filling a test balloon of the catheter assembly with water as

shown at step (1508) of FIG. 15, and injecting lubricating jelly from a syringe into the first compartment of the tray (100) as shown at step 1509 of FIG. 15.

[0204] At step 2106, the health care services provider inserts the catheter. In one embodiment, this can be in accordance with steps (1601,1602,1603,1604) of panel (1302) as described in FIG. 16. At step 2107, the health care provider secures the drain bag to the catheter assembly, which can be in accordance with steps (1605,1606,1607) described with respect to FIG. 16.

[0205] At step 2108, the health care services provider detaches the patient portion (1202) of the printed instructions (1001) from the health care services portion (1201). In one embodiment, this occurs by tearing the patient portion (1202) from the health care services portion (1201) along the perforation (1203), thereby transforming the printed instructions (1001) or instruction manual from a singular or unitary object into a two-piece object consisting of the patient portion (1202) and the health care services portion (1201). As described, above, the health care services provider may then discuss the patient portion (1202) with the patient and further give the patient portion (1202) to the patient to take home after the procedure.

[0206] Turning now to FIGS. 31, 32, and 33, illustrated therein is one embodiment of a method of using the packaged catheter assembly 2901 of FIG. 29. At FIG. 31, a health care services provider 3101 opens the outer bag 2902 that is disposed about the tray 100 and removes the bag 2902 to reveal the packaged catheter assembly 2901 therein. The health care services provider 3101 can then access the instruction manual 1001 that is disposed atop the packaged catheter assembly 2901 in this illustrative embodiment.

[0207] The health care services provider 3101 can then unfold the one or more layers of wrap material 2200. Where an additional layer of wrap material 2701 is included, this unfolding step reveals and makes accessible the additional layer of wrap material 2701. Note that portions of the additional layer of wrap material 2701 may be visible, as shown in FIG. 29, prior to the steps of unfolding.

Bard Exhibit 1004.0053

[0208] As noted above, in one embodiment the one or more layers of wrap material 2200 can be unfolded to form a sterile field. Turning now to FIG. 32, illustrated therein is a step of the method that utilizes this sterile field. Specifically, in FIG. 32 the health care services provider 3101 places the one or more layers of wrap material 2200 beneath the patient 3201, thereby transforming the area beneath the patient from a non-sterile field to a sterile field. Said differently, by placing the patient 3201 atop the one or more layers of wrap material 2200, the patient is effectively moved from a location that may have not been a sterile field to the sterile field atop the one or more layers of wrap material 2200.

[0209] Turning now to FIG. 33, illustrated therein is a step of the method that may be used when an additional layer of wrap material 2701 is included with the packaged catheter assembly 2901. In FIG. 33, the health care services provider 3101 is placing the additional layer of wrap material 2701 atop the patient 3201. Note that in the illustrative embodiment of FIG. 33, the additional layer of wrap material 2701 is fenestrated, in that it includes a perforated opening 3301 suitable for performing a catheterization procedure.

[0210] In the foregoing specification, specific embodiments of the present invention have been described. However, one of ordinary skill in the art appreciates that various modifications and changes can be made without departing from the scope of the present invention as set forth in the claims below. Thus, while preferred embodiments of the invention have been illustrated and described, it is clear that the invention is not so limited. Numerous modifications, changes, variations, substitutions, and equivalents will occur to those skilled in the art without departing from the spirit and scope of the present invention as defined by the following claims. Accordingly, the specification and figures are to be regarded in an illustrative rather than a restrictive sense, and all such modifications are intended to be included within the scope of present invention. The benefits, advantages, solutions to problems, and any element(s) that may cause any benefit, advantage, or solution to occur or become more pronounced are not to be

construed as a critical, required, or essential features or elements of any or all the claims.

What is claimed is:

1. A medical procedure kit, comprising:

   a single layer tray having a first compartment for receiving one or more syringes and a second compartment for receiving a medical assembly;

   a first syringe and a second syringe disposed within the single layer tray in accordance with an order of their use during a catheterization procedure with at least one syringe of the first syringe or the second syringe disposed within the first compartment with the first compartment defining a lubricating jelly application chamber configured to receive lubricating jelly from one of the first syringe or the second syringe for application of the lubricating jelly to at least a portion of the medical assembly;

   the medical assembly disposed in the second compartment, wherein the medical assembly comprises a coiled tubing coupled between a fluid drain bag and a Foley catheter;

   at least one layer of wrap material enclosing the single layer tray within one or more folds of the at least one layer of wrap material; and

   an outer packaging disposed about both the single layer tray and the at least one layer of wrap material.

2. The medical procedure kit of claim 1, wherein the at least one syringe of the first syringe or the second syringe comprises the first syringe and the first syringe contains the lubricating jelly.

3. The medical procedure kit of claim 2, wherein the second syringe contains water.

4. The medical procedure kit of claim 3, wherein the second syringe it at least partially disposed in the second compartment.

5. The medical procedure kit of claim 3, wherein the first compartment is adjacent to, and separated by a wall from, the second compartment.

Bard Exhibit 1004.0056

6. The medical procedure kit of claim 5, wherein the lubricating jelly application chamber is configured to lubricate at least a portion of the medical assembly when the portion of the medical assembly is passed from the first compartment to the second compartment.
7. The medical procedure kit of claim 6, further comprising one or more swabsticks disposed within the single layer tray.
8. A medical procedure kit, comprising

   a single layer tray having a first compartment for receiving one or more syringes and a second compartment for receiving a medical assembly;

   a first syringe and a second syringe disposed within the single layer tray in accordance with their order of use during a catheterization procedure, wherein one syringe of the first syringe or the second syringe contains lubricating jelly and is positioned in the first compartment with the first compartment defining a lubricating jelly application chamber configured to receive the lubricating jelly from the one syringe of the first syringe or the second syringe for application of the lubricating jelly to at least a portion of the medical assembly;

   the medical assembly disposed in the second compartment, wherein the medical assembly comprises a coiled tubing coupled between a fluid drain bag and a Foley catheter;

   at least one layer of wrap material enclosing the single layer tray within one or more folds of the at least one layer of wrap material; and

   an outer packaging disposed about both the single layer tray and the at least one layer of wrap material.
9. The medical procedure kit of claim 8, wherein the lubricating jelly application chamber is configured to apply the lubricating jelly to at least a portion of the Foley catheter when the portion of the Foley catheter is passed from the first compartment to the second compartment.

Bard Exhibit 1004.0057

10. The medical procedure kit of claim 9, further comprising one or more swabsticks disposed within the single layer tray.
11. The medical procedure kit of claim 10, wherein another syringe of the first syringe or the second syringe contains water.
12. The medical procedure kit of claim 11, wherein the another syringe of the first syringe or the second syringe is at least partially positioned in the second compartment.
13. The medical procedure kit of claim 11, wherein the first compartment is adjacent to the second compartment.
14. A medical procedure kit, comprising:

    a tray having a compartment for receiving a coiled tubing coupled between a fluid drain bag and a Foley catheter;

    a first syringe and a second syringe disposed within the tray;

    at least one layer of wrap material enclosing the tray within one or more folds of the at least one layer of wrap material; and

    an outer packaging disposed about both the tray and the at least one layer of wrap material, wherein:

        the first syringe and the second syringe are ordered within the tray in accordance with their use during a catheterization procedure;

        the tray comprises a surface defining at least two compartments separated by a wall, the at least two compartments comprising a first compartment to support at least the second syringe and a second compartment to support the fluid drain bag;

        the first compartment comprising a base member indicating which of the first syringe or the second syringe should be used in the catheterization procedure; and

        the first compartment defining a lubricating jelly application chamber to

receive lubricating jelly from the second syringe for application of the lubricating jelly to at least a portion of the Foley catheter.

15. The medical procedure kit of claim 14, the tray comprising a single layer tray.
16. The medical procedure kit of claim 15, further comprising one or more swabsticks positioned within the single layer tray.
17. The medical procedure kit of claim 16, the tray comprising a third compartment, wherein the one or more swabsticks are positioned in the third compartment.
18. The medical procedure kit of claim 14, wherein the first compartment and the second compartment are adjacent.
19. The medical procedure kit of claim 18, further comprising a wall separating the first compartment from the second compartment.
20. The medical procedure kit of claim 19, the first compartment comprising one or more contours for accommodating flanges of one or more of the first syringe or the second syringe.

Bard Exhibit 1004.0059

ABSTRACT

A tray (100) for accommodating a coiled medical device, such as a catheter assembly (700), includes a first compartment (101), a second compartment (102), and a third compartment (103). The catheter assembly (700) and devices associated with a catheterization procedure, such as syringes (701,702) containing sterile water and lubricating jelly and a specimen container (703) can be disposed within the tray. Printed instructions (1001) can be included with the tray (100). One or more layers of wrap material (2200) can be folded about the tray (100) to enclose the tray (100) and other items, such as an additional layer of wrap material (2701), packaged liquid hand sanitizer (2401), and packaged gloves (2402). When a health care services provider (3101) unfolds the wrap material, the same can be used to create a sterile field beneath a patient (3201).

Bard Exhibit 1004.0060

PTO/AIA/14 (11-15)
Approved for use through 04/30/2017. OMB 0651-0032
U.S. Patent and Trademark Office; U.S. DEPARTMENT OF COMMERCE
Under the Paperwork Reduction Act of 1995, no persons are required to respond to a collection of information unless it contains a valid OMB control number.

Application Data Sheet 37 CFR 1.76	Attorney Docket Number	10055UCIP2D1C1C1C1C1C1
	Application Number	
Title of Invention	Catheter Tray, Packaging System, Instruction Insert, and Associated Methods	

The application data sheet is part of the provisional or nonprovisional application for which it is being submitted. The following form contains the bibliographic data arranged in a format specified by the United States Patent and Trademark Office as outlined in 37 CFR 1.76.
This document may be completed electronically and submitted to the Office in electronic format using the Electronic Filing System (EFS) or the document may be printed and included in a paper filed application.

Secrecy Order 37 CFR 5.2:

☐ Portions or all of the application associated with this Application Data Sheet may fall under a Secrecy Order pursuant to 37 CFR 5.2 (Paper filers only. Applications that fall under Secrecy Order may not be filed electronically.)

Inventor Information:

Inventor 1 Remove

Legal Name

Prefix	Given Name	Middle Name	Family Name	Suffix
	Jennifer	E.	Tomes	

Residence Information (Select One) ● US Residency Non US Residency Active US Military Service

City	Mundelein	State/Province	IL	Country of Residence i	US

Mailing Address of Inventor:

Address 1	P.O. Box 904
Address 2	
City	Mundelein
State/Province	IL
Postal Code	60060
Country i	US

Inventor 2 Remove

Legal Name

Prefix	Given Name	Middle Name	Family Name	Suffix
	Sarah		Dickinson	

Residence Information (Select One) ◉ US Residency Non US Residency Active US Military Service

City	Chicago	State/Province	IL	Country of Residence i	US

Mailing Address of Inventor:

Address 1	522 West Belden, Apartment L1
Address 2	
City	Chicago
State/Province	IL
Postal Code	60614
Country i	US

Inventor 3 Remove

Legal Name

Prefix	Given Name	Middle Name	Family Name	Suffix
	Deborah		Adler	

Residence Information (Select One) ◉ US Residency Non US Residency Active US Military Service

Bard Exhibit 1004.0061

Under the Paperwork Reduction Act of 1995, no persons are required to respond to a collection of information unless it contains a valid OMB control number.

Application Data Sheet 37 CFR 1.76	Attorney Docket Number	10055UCIP2D1C1C1C1C1C1
	Application Number	
Title of Invention	Catheter Tray, Packaging System, Instruction Insert, and Associated Methods	

City	New York	State/Province	NY	Country of Residence i	US

Mailing Address of Inventor:

Address 1	60 East 8th Street, Apt 5E		
Address 2			
City	New York	State/Province	NY
Postal Code	10003	Country i	US

Inventor 4 Remove

Legal Name

Prefix	Given Name	Middle Name	Family Name	Suffix
	Jack		Maze	

Residence Information (Select One) ◉ US Residency Non US Residency Active US Military Service

City	Long Grove	State/Province	IL	Country of Residence i	US

Mailing Address of Inventor:

Address 1	5851 Teal Lane		
Address 2			
City	Long Grove	State/Province	IL
Postal Code	60047	Country i	US

Inventor 5 Remove

Legal Name

Prefix	Given Name	Middle Name	Family Name	Suffix
	Alberto		Savage	

Residence Information (Select One) ◉ US Residency Non US Residency Active US Military Service

City	Buffalo Grove	State/Province	IL	Country of Residence i	US

Mailing Address of Inventor:

Address 1	471 Arbor Gate Lane		
Address 2			
City	Buffalo Grove	State/Province	IL
Postal Code	60089	Country i	US

Inventor 6 Remove

Legal Name

Prefix	Given Name	Middle Name	Family Name	Suffix
	Kenneth		Chua	

Residence Information (Select One) ◉ US Residency Non US Residency Active US Military Service

City	Glenview	State/Province	IL	Country of Residence i	US

Under the Paperwork Reduction Act of 1995, no persons are required to respond to a collection of information unless it contains a valid OMB control number.

Application Data Sheet 37 CFR 1.76	Attorney Docket Number	10055UCIP2D1C1C1C1C1C1
	Application Number	
Title of Invention	Catheter Tray, Packaging System, Instruction Insert, and Associated Methods	

Mailing Address of Inventor:

Address 1	3904 Harvest Lane		
Address 2			
City	Glenview	**State/Province**	IL
Postal Code	60025	**Country** i	US

Inventor 7 Remove

Legal Name

Prefix	Given Name	Middle Name	Family Name	Suffix
	Earl		Wilson	

Residence Information (Select One) ◉ US Residency Non US Residency Active US Military Service

City	Ingleside	**State/Province**	IL	**Country of Residence** i	US

Mailing Address of Inventor:

Address 1	26075 West Rollins Road		
Address 2			
City	Ingleside	**State/Province**	IL
Postal Code	60041	**Country** i	US

Inventor 8 Remove

Legal Name

Prefix	Given Name	Middle Name	Family Name	Suffix
	John		Kutsch	

Residence Information (Select One) ◉ US Residency Non US Residency Active US Military Service

City	Harvard	**State/Province**	IL	**Country of Residence** i	US

Mailing Address of Inventor:

Address 1	107 West Front Street		
Address 2			
City	Harvard	**State/Province**	IL
Postal Code	60033	**Country** i	US

All Inventors Must Be Listed - Additional Inventor Information blocks may be generated within this form by selecting the **Add** button. Add

Correspondence Information:

Enter either Customer Number or complete the Correspondence Information section below.
For further information see 37 CFR 1.33(a).

☐ **An Address is being provided for the correspondence Information of this application.**

Customer Number	27939

PTO/AIA/14 (11-15)
Approved for use through 04/30/2017. OMB 0651-0032
U.S. Patent and Trademark Office; U.S. DEPARTMENT OF COMMERCE
Under the Paperwork Reduction Act of 1995, no persons are required to respond to a collection of information unless it contains a valid OMB control number.

Application Data Sheet 37 CFR 1.76	Attorney Docket Number	10055UCIP2D1C1C1C1C1C1
	Application Number	
Title of Invention	Catheter Tray, Packaging System, Instruction Insert, and Associated Methods	

Email Address	pburrus@burrusiplaw.com	Add Email	Remove Email

Application Information:

Title of the Invention	Catheter Tray, Packaging System, Instruction Insert, and Associated Methods		
Attorney Docket Number	10055UCIP2D1C1C1C1C1C1	**Small Entity Status Claimed**	☐
Application Type	Nonprovisional		
Subject Matter	Utility		
Total Number of Drawing Sheets (if any)		**Suggested Figure for Publication (if any)**	

Filing By Reference:

Only complete this section when filing an application by reference under 35 U.S.C. 111(c) and 37 CFR 1.57(a). Do not complete this section if application papers including a specification and any drawings are being filed. Any domestic benefit or foreign priority information must be provided in the appropriate section(s) below (i.e., "Domestic Benefit/National Stage Information" and "Foreign Priority Information").

For the purposes of a filing date under 37 CFR 1.53(b), the description and any drawings of the present application are replaced by this reference to the previously filed application, subject to conditions and requirements of 37 CFR 1.57(a).

Application number of the previously filed application	Filing date (YYYY-MM-DD)	Intellectual Property Authority or Country

Publication Information:

☐ Request Early Publication (Fee required at time of Request 37 CFR 1.219)

☐ **Request Not to Publish.** I hereby request that the attached application not be published under 35 U.S.C. 122(b) and certify that the invention disclosed in the attached application **has not and will not** be the subject of an application filed in another country, or under a multilateral international agreement, that requires publication at eighteen months after filing.

Representative Information:

Representative information should be provided for all practitioners having a power of attorney in the application. Providing this information in the Application Data Sheet does not constitute a power of attorney in the application (see 37 CFR 1.32).
Either enter Customer Number or complete the Representative Name section below. If both sections are completed the customer Number will be used for the Representative Information during processing.

Please Select One:	● Customer Number	US Patent Practitioner	◯ Limited Recognition (37 CFR 11.9)
Customer Number	27939		

Bard Exhibit 1004.0064

Under the Paperwork Reduction Act of 1995, no persons are required to respond to a collection of information unless it contains a valid OMB control number.

Application Data Sheet 37 CFR 1.76	Attorney Docket Number	10055UCIP2D1C1C1C1C1C1
	Application Number	
Title of Invention	Catheter Tray, Packaging System, Instruction Insert, and Associated Methods	

Domestic Benefit/National Stage Information:

This section allows for the applicant to either claim benefit under 35 U.S.C. 119(e), 120, 121, 365(c), or 386(c) or indicate National Stage entry from a PCT application. Providing benefit claim information in the Application Data Sheet constitutes the specific reference required by 35 U.S.C. 119(e) or 120, and 37 CFR 1.78.
When referring to the current application, please leave the "Application Number" field blank.

Prior Application Status	Pending			Remove
Application Number	Continuity Type	Prior Application Number	Filing or 371(c) Date (YYYY-MM-DD)	
	Continuation of	16833575	2020-03-28	
Prior Application Status	Patented			Remove
Application Number	Continuity Type	Prior Application Number	Filing Date (YYYY-MM-DD)	Patent Number	Issue Date (YYYY-MM-DD)
15684787	Continuation of	14793455	2015-07-07	9745088	2017-08-29
Prior Application Status	Patented			Remove
Application Number	Continuity Type	Prior Application Number	Filing Date (YYYY-MM-DD)	Patent Number	Issue Date (YYYY-MM-DD)
14793455	Continuation of	13860902	2013-04-11	9522753	2016-12-20
Prior Application Status	Patented			Remove
Application Number	Continuity Type	Prior Application Number	Filing Date (YYYY-MM-DD)	Patent Number	Issue Date (YYYY-MM-DD)
13860902	Division of	13155026	2011-06-07	8448786	2013-05-28
Prior Application Status	Expired			Remove
Application Number	Continuity Type	Prior Application Number	Filing or 371(c) Date (YYYY-MM-DD)	
13155026	Claims benefit of provisional	61352140	2010-06-07	
Prior Application Status	Expired			Remove
Application Number	Continuity Type	Prior Application Number	Filing or 371(c) Date (YYYY-MM-DD)	
13155026	Claims benefit of provisional	61352155	2010-06-07	
Prior Application Status	Expired			Remove
Application Number	Continuity Type	Prior Application Number	Filing or 371(c) Date (YYYY-MM-DD)	
13155026	Claims benefit of provisional	61428944	2010-12-31	
Prior Application Status	Expired			Remove
Application Number	Continuity Type	Prior Application Number	Filing or 371(c) Date (YYYY-MM-DD)	
13155026	Claims benefit of provisional	61437796	2011-01-31	

Bard Exhibit 1004.0065

Under the Paperwork Reduction Act of 1995, no persons are required to respond to a collection of information unless it contains a valid OMB control number.

Application Data Sheet 37 CFR 1.76	Attorney Docket Number	10055UCIP2D1C1C1C1C1C1
	Application Number	
Title of Invention	Catheter Tray, Packaging System, Instruction Insert, and Associated Methods	

Prior Application Status	Patented				Remove
Application Number	Continuity Type	Prior Application Number	Filing Date (YYYY-MM-DD)	Patent Number	Issue Date (YYYY-MM-DD)
13155026	Continuation in part of	12495148	2009-06-30	8631935	2014-01-21
Prior Application Status	Abandoned				Remove
Application Number	Continuity Type	Prior Application Number	Filing or 371(c) Date (YYYY-MM-DD)		
13155026	Continuation in part of	12647515	2009-12-27		
Prior Application Status	Patented				Remove
Application Number	Continuity Type	Prior Application Number	Filing Date (YYYY-MM-DD)	Patent Number	Issue Date (YYYY-MM-DD)
13155026	Continuation in part of	13153265	2011-06-03	9795761	2017-10-24
Prior Application Status	Abandoned				Remove
Application Number	Continuity Type	Prior Application Number	Filing or 371(c) Date (YYYY-MM-DD)		
13155026	Continuation in part of	13153300	2011-06-03		
Prior Application Status	Expired				Remove
Application Number	Continuity Type	Prior Application Number	Filing or 371(c) Date (YYYY-MM-DD)		
12495148	Claims benefit of provisional	61183629	2009-06-03		
Prior Application Status	Pending				Remove
Application Number	Continuity Type	Prior Application Number	Filing or 371(c) Date (YYYY-MM-DD)		
16833575	Continuation of	15684787	2017-08-23		
Additional Domestic Benefit/National Stage Data may be generated within this form by selecting the **Add** button.					Add

Foreign Priority Information:

This section allows for the applicant to claim priority to a foreign application. Providing this information in the application data sheet constitutes the claim for priority as required by 35 U.S.C. 119(b) and 37 CFR 1.55. When priority is claimed to a foreign application that is eligible for retrieval under the priority document exchange program (PDX)[i] the information will be used by the Office to automatically attempt retrieval pursuant to 37 CFR 1.55(i)(1) and (2). Under the PDX program, applicant bears the ultimate responsibility for ensuring that a copy of the foreign application is received by the Office from the participating foreign intellectual property office, or a certified copy of the foreign priority application is filed, within the time period specified in 37 CFR 1.55(g)(1).

Remove

Application Number	Country[i]	Filing Date (YYYY-MM-DD)	Access Code[i] (if applicable)

Under the Paperwork Reduction Act of 1995, no persons are required to respond to a collection of information unless it contains a valid OMB control number.

Application Data Sheet 37 CFR 1.76	Attorney Docket Number	10055UCIP2D1C1C1C1C1C1
	Application Number	
Title of Invention	Catheter Tray, Packaging System, Instruction Insert, and Associated Methods	

Additional Foreign Priority Data may be generated within this form by selecting the **Add** button. Add

Statement under 37 CFR 1.55 or 1.78 for AIA (First Inventor to File) Transition Applications

☐ This application (1) claims priority to or the benefit of an application filed before March 16, 2013 and (2) also contains, or contained at any time, a claim to a claimed invention that has an effective filing date on or after March 16, 2013.
NOTE: By providing this statement under 37 CFR 1.55 or 1.78, this application, with a filing date on or after March 16, 2013, will be examined under the first inventor to file provisions of the AIA.

Application Data Sheet 37 CFR 1.76	Attorney Docket Number	10055UCIP2D1C1C1C1C1C1
	Application Number	
Title of Invention	Catheter Tray, Packaging System, Instruction Insert, and Associated Methods	

Authorization or Opt-Out of Authorization to Permit Access:

When this Application Data Sheet is properly signed and filed with the application, applicant has provided written authority to permit a participating foreign intellectual property (IP) office access to the instant application-as-filed (see paragraph A in subsection 1 below) and the European Patent Office (EPO) access to any search results from the instant application (see paragraph B in subsection 1 below).

Should applicant choose not to provide an authorization identified in subsection 1 below, applicant **must opt-out** of the authorization by checking the corresponding box A or B or both in subsection 2 below.

NOTE: This section of the Application Data Sheet is **ONLY** reviewed and processed with the **INITIAL** filing of an application. After the initial filing of an application, an Application Data Sheet cannot be used to provide or rescind authorization for access by a foreign IP office(s). Instead, Form PTO/SB/39 or PTO/SB/69 must be used as appropriate.

1. Authorization to Permit Access by a Foreign Intellectual Property Office(s)

A. Priority Document Exchange (PDX) - Unless box A in subsection 2 (opt-out of authorization) is checked, the undersigned hereby **grants the USPTO authority** to provide the European Patent Office (EPO), the Japan Patent Office (JPO), the Korean Intellectual Property Office (KIPO), the State Intellectual Property Office of the People's Republic of China (SIPO), the World Intellectual Property Organization (WIPO), and any other foreign intellectual property office participating with the USPTO in a bilateral or multilateral priority document exchange agreement in which a foreign application claiming priority to the instant patent application is filed, access to: (1) the instant patent application-as-filed and its related bibliographic data, (2) any foreign or domestic application to which priority or benefit is claimed by the instant application and its related bibliographic data, and (3) the date of filing of this Authorization. See 37 CFR 1.14(h)(1).

B. Search Results from U.S. Application to EPO - Unless box B in subsection 2 (opt-out of authorization) is checked, the undersigned hereby **grants the USPTO authority** to provide the EPO access to the bibliographic data and search results from the instant patent application when a European patent application claiming priority to the instant patent application is filed. See 37 CFR 1.14(h)(2).

The applicant is reminded that the EPO's Rule 141(1) EPC (European Patent Convention) requires applicants to submit a copy of search results from the instant application without delay in a European patent application that claims priority to the instant application.

2. Opt-Out of Authorizations to Permit Access by a Foreign Intellectual Property Office(s)

☐ A. Applicant **DOES NOT** authorize the USPTO to permit a participating foreign IP office access to the instant application-as-filed. If this box is checked, the USPTO will not be providing a participating foreign IP office with any documents and information identified in subsection 1A above.

☐ B. Applicant **DOES NOT** authorize the USPTO to transmit to the EPO any search results from the instant patent application. If this box is checked, the USPTO will not be providing the EPO with search results from the instant application.

NOTE: Once the application has published or is otherwise publicly available, the USPTO may provide access to the application in accordance with 37 CFR 1.14.

PTO/AIA/14 (11-15)
Approved for use through 04/30/2017. OMB 0651-0032
U.S. Patent and Trademark Office; U.S. DEPARTMENT OF COMMERCE
Under the Paperwork Reduction Act of 1995, no persons are required to respond to a collection of information unless it contains a valid OMB control number.

Application Data Sheet 37 CFR 1.76	Attorney Docket Number	10055UCIP2D1C1C1C1C1C1
	Application Number	
Title of Invention	Catheter Tray, Packaging System, Instruction Insert, and Associated Methods	

Applicant Information:

Providing assignment information in this section does not substitute for compliance with any requirement of part 3 of Title 37 of CFR to have an assignment recorded by the Office.

Applicant 1 Remove

If the applicant is the inventor (or the remaining joint inventor or inventors under 37 CFR 1.45), this section should not be completed. The information to be provided in this section is the name and address of the legal representative who is the applicant under 37 CFR 1.43; or the name and address of the assignee, person to whom the inventor is under an obligation to assign the invention, or person who otherwise shows sufficient proprietary interest in the matter who is the applicant under 37 CFR 1.46. If the applicant is an applicant under 37 CFR 1.46 (assignee, person to whom the inventor is obligated to assign, or person who otherwise shows sufficient proprietary interest) together with one or more joint inventors, then the joint inventor or inventors who are also the applicant should be identified in this section. Clear

● Assignee	Legal Representative under 35 U.S.C. 117	Joint Inventor
Person to whom the inventor is obligated to assign.	Person who shows sufficient proprietary interest	

If applicant is the legal representative, indicate the authority to file the patent application, the inventor is:

Name of the Deceased or Legally Incapacitated Inventor:

If the Applicant is an Organization check here. ☒

Organization Name	Medline Industries, Inc		
Mailing Address Information For Applicant:			
Address 1	Three Lakes Drive		
Address 2			
City	Northfield	**State/Province**	IL
Country	US	Postal Code	60093
Phone Number		Fax Number	
Email Address			

Additional Applicant Data may be generated within this form by selecting the Add button. Add

Assignee Information including Non-Applicant Assignee Information:

Providing assignment information in this section does not substitute for compliance with any requirement of part 3 of Title 37 of CFR to have an assignment recorded by the Office.

Bard Exhibit 1004.0069

Under the Paperwork Reduction Act of 1995, no persons are required to respond to a collection of information unless it contains a valid OMB control number.

Application Data Sheet 37 CFR 1.76	Attorney Docket Number	10055UCIP2D1C1C1C1C1C1
	Application Number	
Title of Invention	Catheter Tray, Packaging System, Instruction Insert, and Associated Methods	

Assignee 1

Complete this section if assignee information, including non-applicant assignee information, is desired to be included on the patent application publication. An assignee-applicant identified in the "Applicant Information" section will appear on the patent application publication as an applicant. For an assignee-applicant, complete this section only if identification as an assignee is also desired on the patent application publication.

Remove

If the Assignee or Non-Applicant Assignee is an Organization check here. ☐

Prefix	**Given Name**	Middle Name	**Family Name**	Suffix

Mailing Address Information For Assignee including Non-Applicant Assignee:

Address 1			
Address 2			
City		**State/Province**	
Country i		Postal Code	
Phone Number		Fax Number	
Email Address			

Additional Assignee or Non-Applicant Assignee Data may be generated within this form by selecting the Add button. Add

Signature:

Remove

NOTE: This Application Data Sheet must be signed in accordance with 37 CFR 1.33(b). **However, if this Application Data Sheet is submitted with the INITIAL filing of the application and either box A or B is not checked in subsection 2 of the "Authorization or Opt-Out of Authorization to Permit Access" section, then this form must also be signed in accordance with 37 CFR 1.14(c).**

This Application Data Sheet **must** be signed by a patent practitioner if one or more of the applicants is a **juristic entity** (e.g., corporation or association). If the applicant is two or more joint inventors, this form must be signed by a patent practitioner, **all** joint inventors who are the applicant, or one or more joint inventor-applicants who have been given power of attorney (e.g., see USPTO Form PTO/AIA/81) on behalf of **all** joint inventor-applicants.

See 37 CFR 1.4(d) for the manner of making signatures and certifications.

Signature	/Philip H. Burrus, IV/			Date (YYYY-MM-DD)	2020-07-31
First Name	Philip	Last Name	Burrus, IV	Registration Number	45432

Additional Signature may be generated within this form by selecting the Add button. Add

Bard Exhibit 1004.0070

Application Data Sheet 37 CFR 1.76	Attorney Docket Number	10055UCIP2D1C1C1C1C1C1
	Application Number	
Title of Invention	Catheter Tray, Packaging System, Instruction Insert, and Associated Methods	

This collection of information is required by 37 CFR 1.76. The information is required to obtain or retain a benefit by the public which is to file (and by the USPTO to process) an application. Confidentiality is governed by 35 U.S.C. 122 and 37 CFR 1.14. This collection is estimated to take 23 minutes to complete, including gathering, preparing, and submitting the completed application data sheet form to the USPTO. Time will vary depending upon the individual case. Any comments on the amount of time you require to complete this form and/or suggestions for reducing this burden, should be sent to the Chief Information Officer, U.S. Patent and Trademark Office, U.S. Department of Commerce, P.O. Box 1450, Alexandria, VA 22313-1450. DO NOT SEND FEES OR COMPLETED FORMS TO THIS ADDRESS. **SEND TO: Commissioner for Patents, P.O. Box 1450, Alexandria, VA 22313-1450.**

Privacy Act Statement

The Privacy Act of 1974 (P.L. 93-579) requires that you be given certain information in connection with your submission of the attached form related to a patent application or patent. Accordingly, pursuant to the requirements of the Act, please be advised that: (1) the general authority for the collection of this information is 35 U.S.C. 2(b)(2); (2) furnishing of the information solicited is voluntary; and (3) the principal purpose for which the information is used by the U.S. Patent and Trademark Office is to process and/or examine your submission related to a patent application or patent. If you do not furnish the requested information, the U.S. Patent and Trademark Office may not be able to process and/or examine your submission, which may result in termination of proceedings or abandonment of the application or expiration of the patent.

The information provided by you in this form will be subject to the following routine uses:

1 The information on this form will be treated confidentially to the extent allowed under the Freedom of Information Act (5 U.S.C. 552) and the Privacy Act (5 U.S.C. 552a). Records from this system of records may be disclosed to the Department of Justice to determine whether the Freedom of Information Act requires disclosure of these records.

2. A record from this system of records may be disclosed, as a routine use, in the course of presenting evidence to a court, magistrate, or administrative tribunal, including disclosures to opposing counsel in the course of settlement negotiations.

3 A record in this system of records may be disclosed, as a routine use, to a Member of Congress submitting a request involving an individual, to whom the record pertains, when the individual has requested assistance from the Member with respect to the subject matter of the record.

4. A record in this system of records may be disclosed, as a routine use, to a contractor of the Agency having need for the information in order to perform a contract. Recipients of information shall be required to comply with the requirements of the Privacy Act of 1974, as amended, pursuant to 5 U.S.C. 552a(m).

5. A record related to an International Application filed under the Patent Cooperation Treaty in this system of records may be disclosed, as a routine use, to the International Bureau of the World Intellectual Property Organization, pursuant to the Patent CooperationTreaty.

6. A record in this system of records may be disclosed, as a routine use, to another federal agency for purposes of National Security review (35 U.S.C. 181) and for review pursuant to the Atomic Energy Act (42 U.S.C. 218(c)).

7. A record from this system of records may be disclosed, as a routine use, to the Administrator, General Services, or his/her designee, during an inspection of records conducted by GSA as part of that agency's responsibility to recommend improvements in records management practices and programs, under authority of 44 U.S.C. 2904 and 2906. Such disclosure shall be made in accordance with the GSA regulations governing inspection of records for this purpose, and any other relevant (i.e., GSA or Commerce) directive. Such disclosure shall not be used to make determinations about individuals.

8. A record from this system of records may be disclosed, as a routine use, to the public after either publication of the application pursuant to 35 U.S.C. 122(b) or issuance of a patent pursuant to 35 U.S.C. 151. Further, a record may be disclosed, subject to the limitations of 37 CFR 1.14, as a routine use, to the public if the record was filed in an application which became abandoned or in which the proceedings were terminated and which application is referenced by either a published application, an application open to public inspections or an issued patent.

9. A record from this system of records may be disclosed, as a routine use, to a Federal, State, or local law enforcement agency, if the USPTO becomes aware of a violation or potential violation of law or regulation.

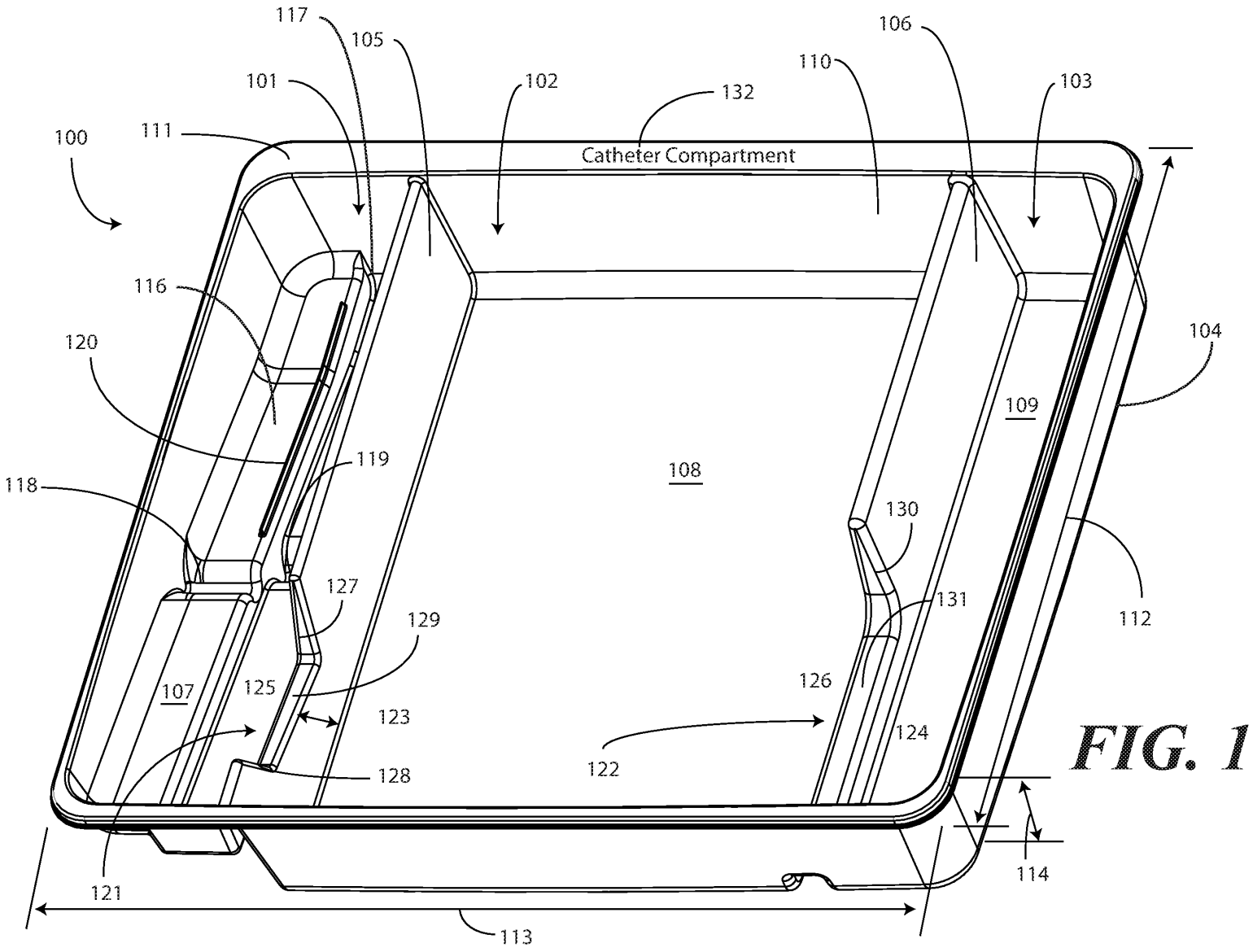
100
101
102
103
104
105
106
107
108
109
110
111
112
113
114
116
117
118
119
120
121
122
123
124
125
126
127
128
129
130
131
132
Catheter Compartment

FIG. 1

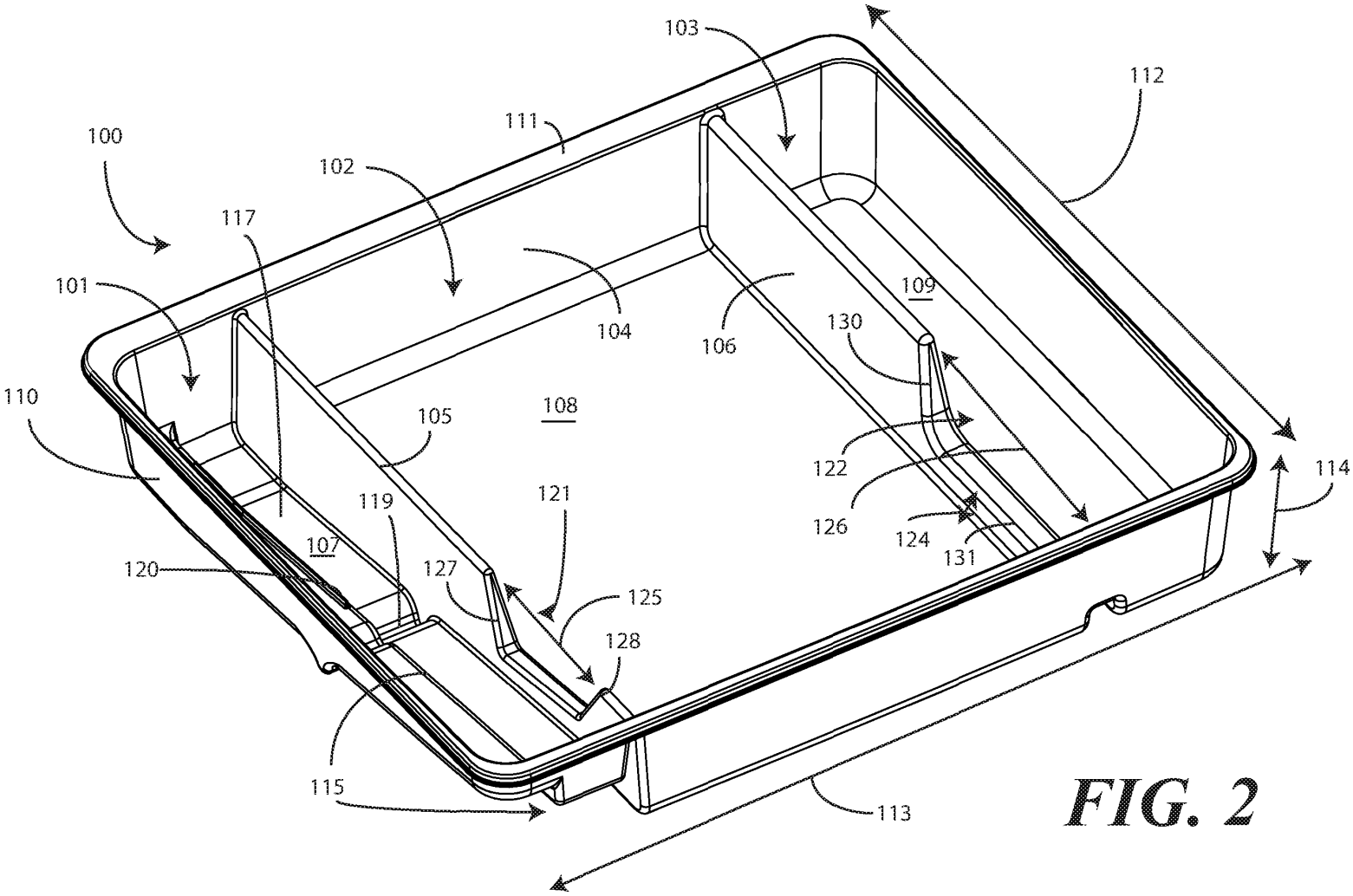
100
101
102
103
104
105
106
107
108
109
110
111
112
113
114
115
117
119
120
121
122
124
125
126
127
128
130
131

FIG. 2

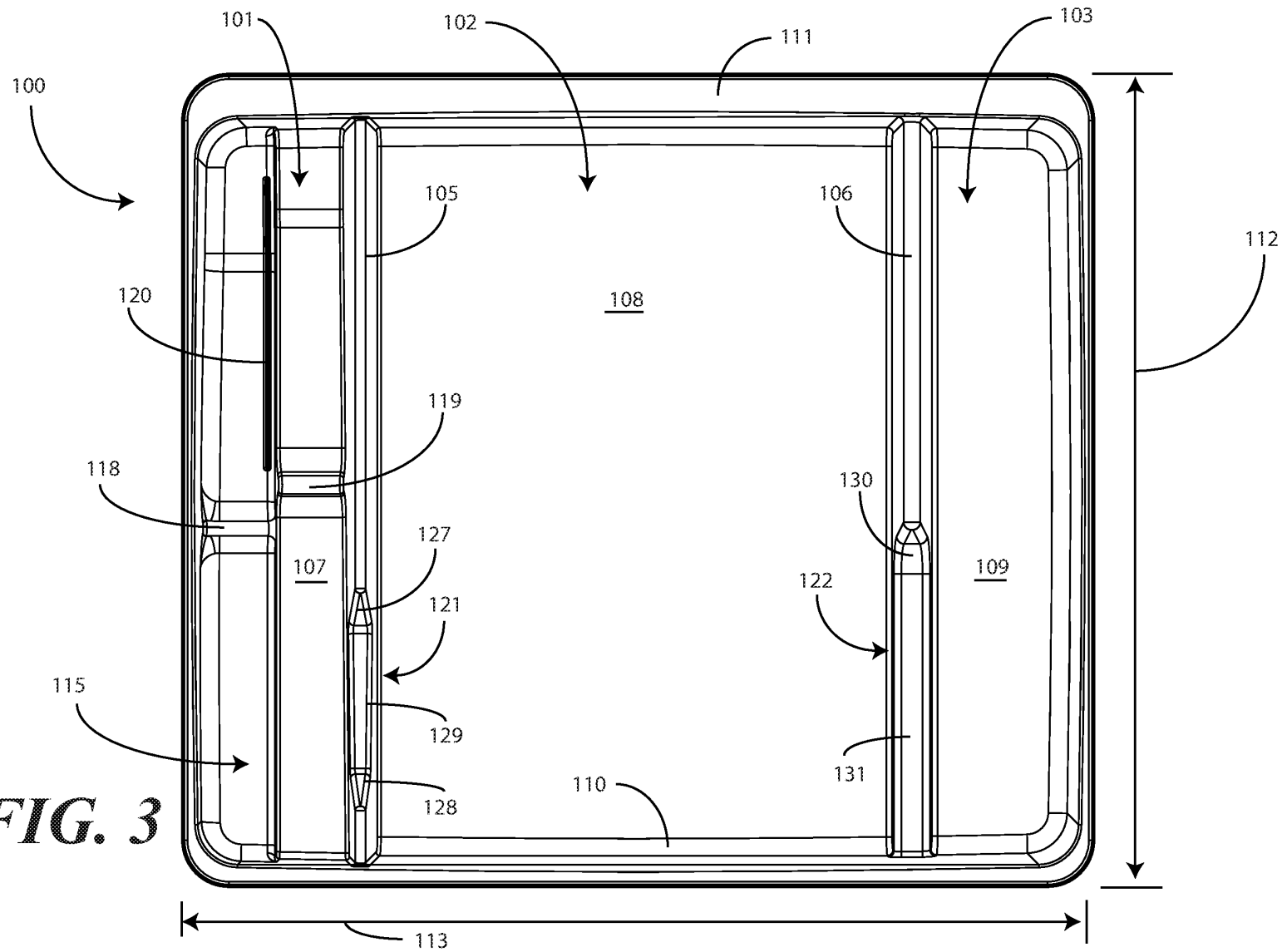
100
101
102
103
105
106
107
108
109
110
111
112
113
115
118
119
120
121
122
127
128
129
130
131

FIG. 3

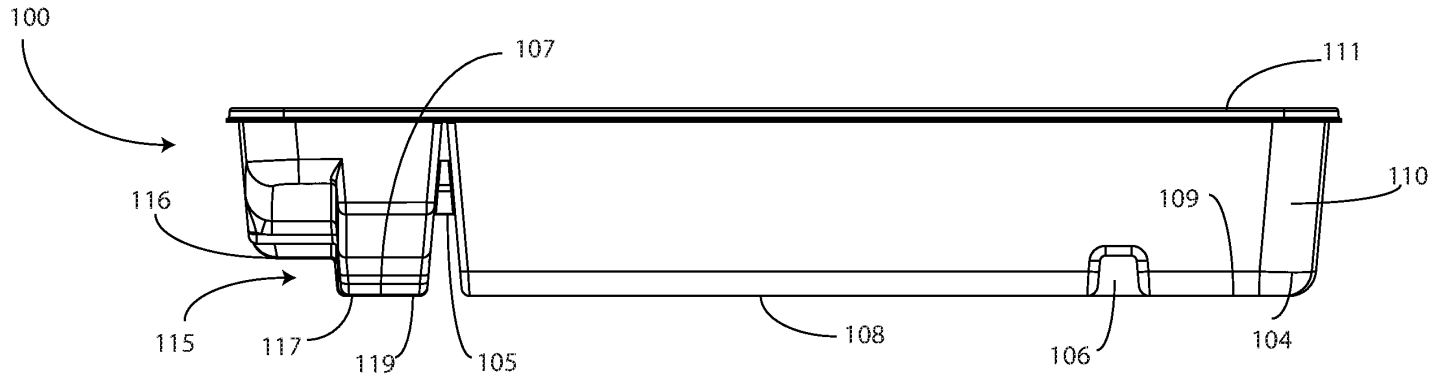
100
107
111
116
110
109
115
117
119
105
108
106
104

FIG. 4

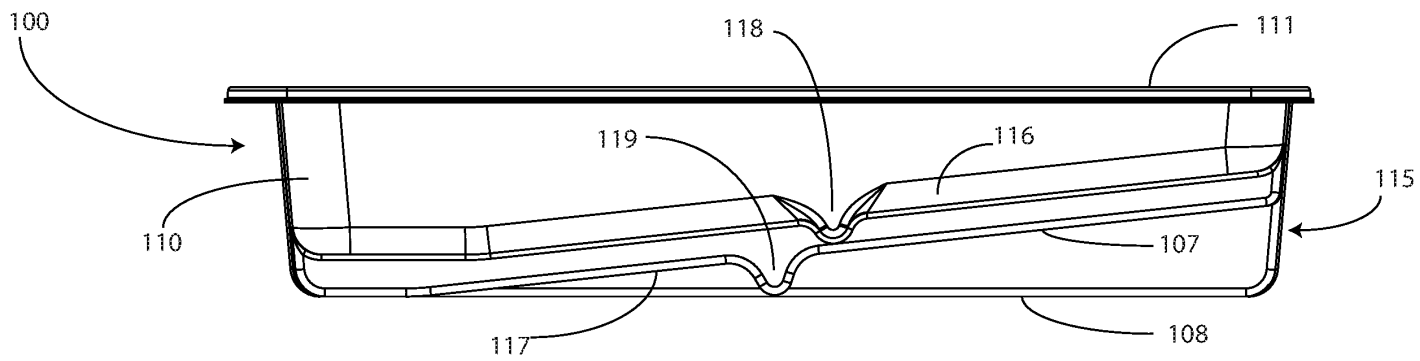
100
118
111
119
116
115
110
107
117
108

FIG. 5

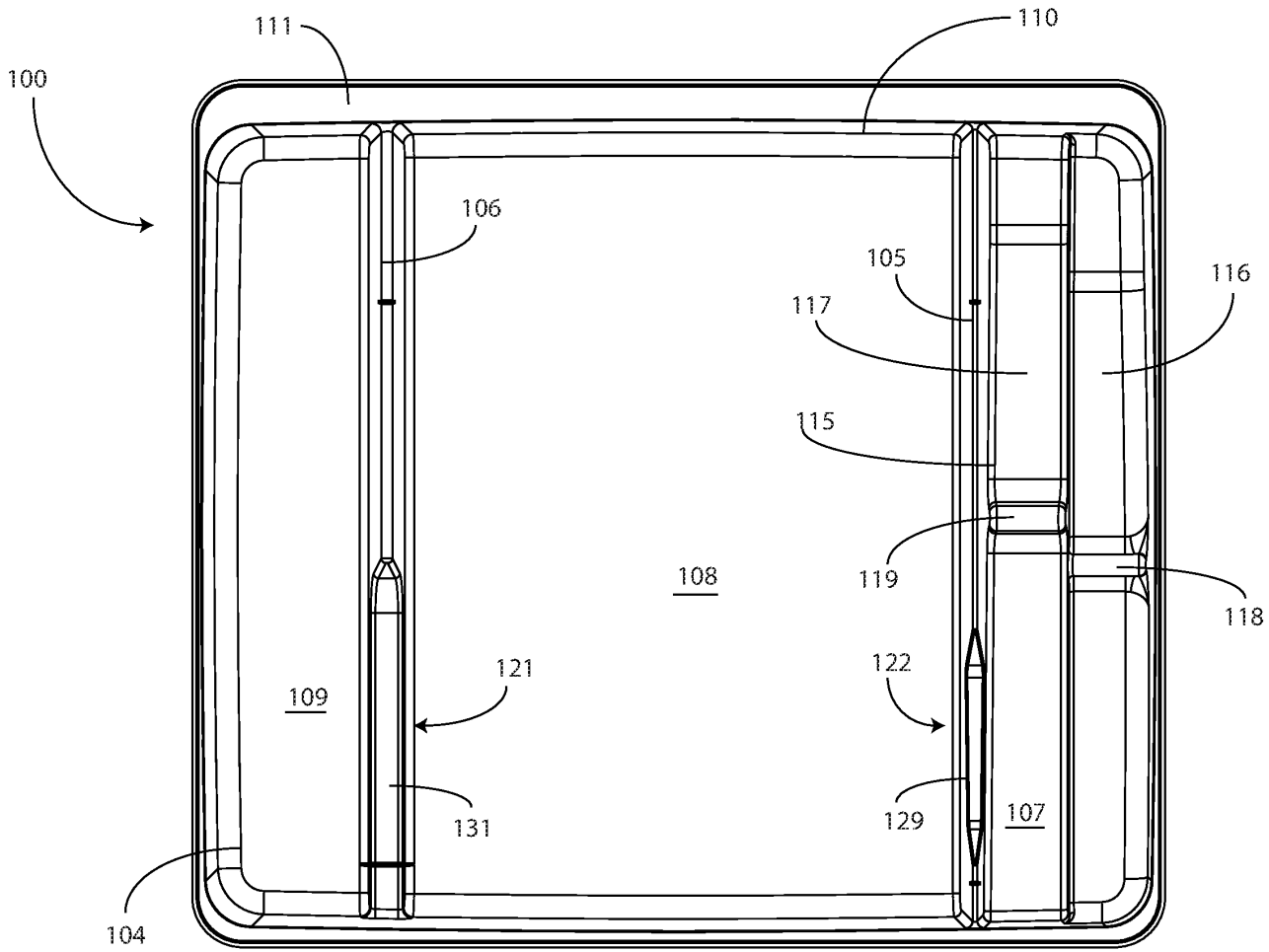
100
111
110
106
105
116
117
115
108
119
118
121
122
109
131
129
107
104

FIG. 6

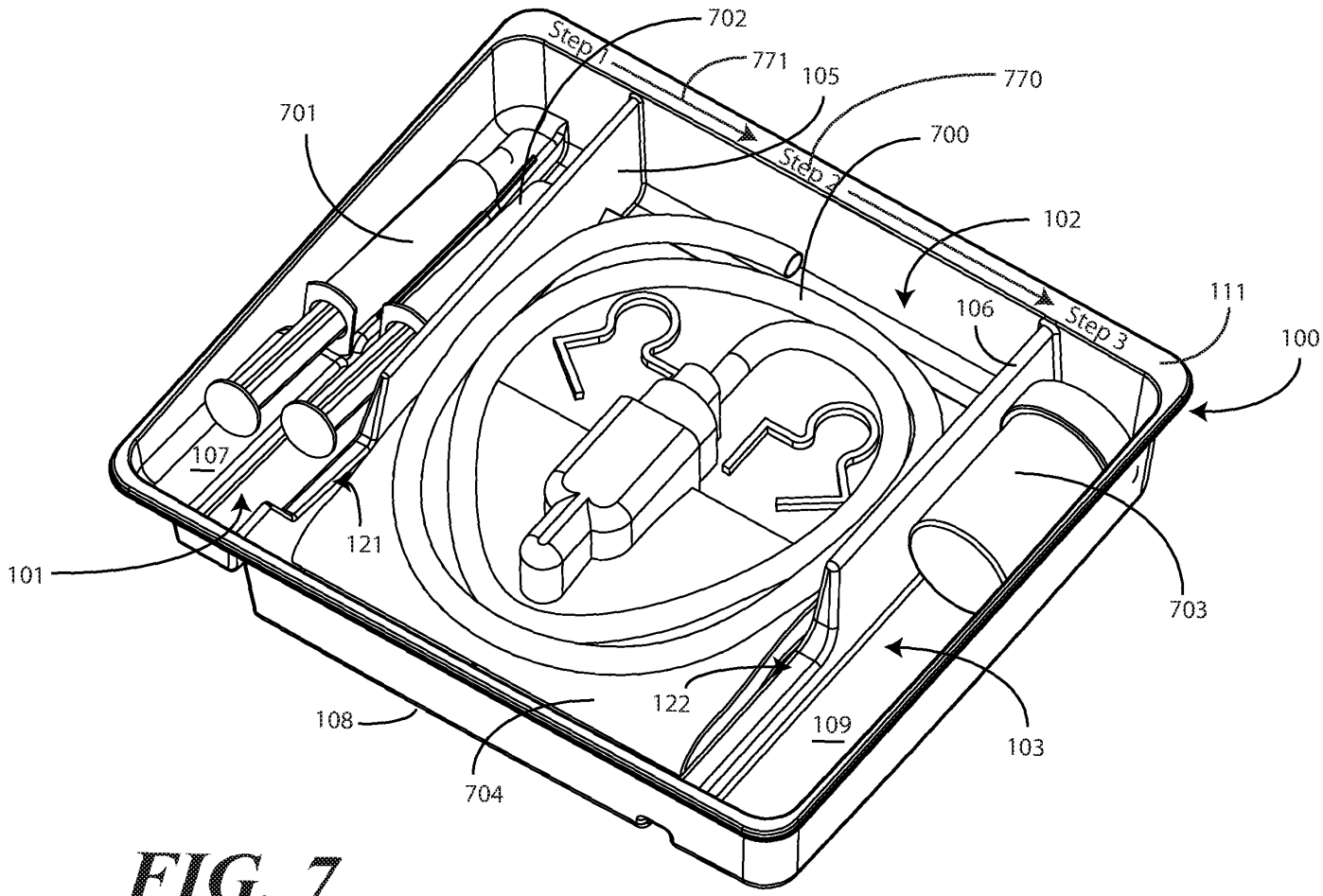
702
771
105
770
700
701
Step 1
Step 2
Step 3
102
111
106
100
107
121
101
703
122
108
109
103
704

FIG. 7

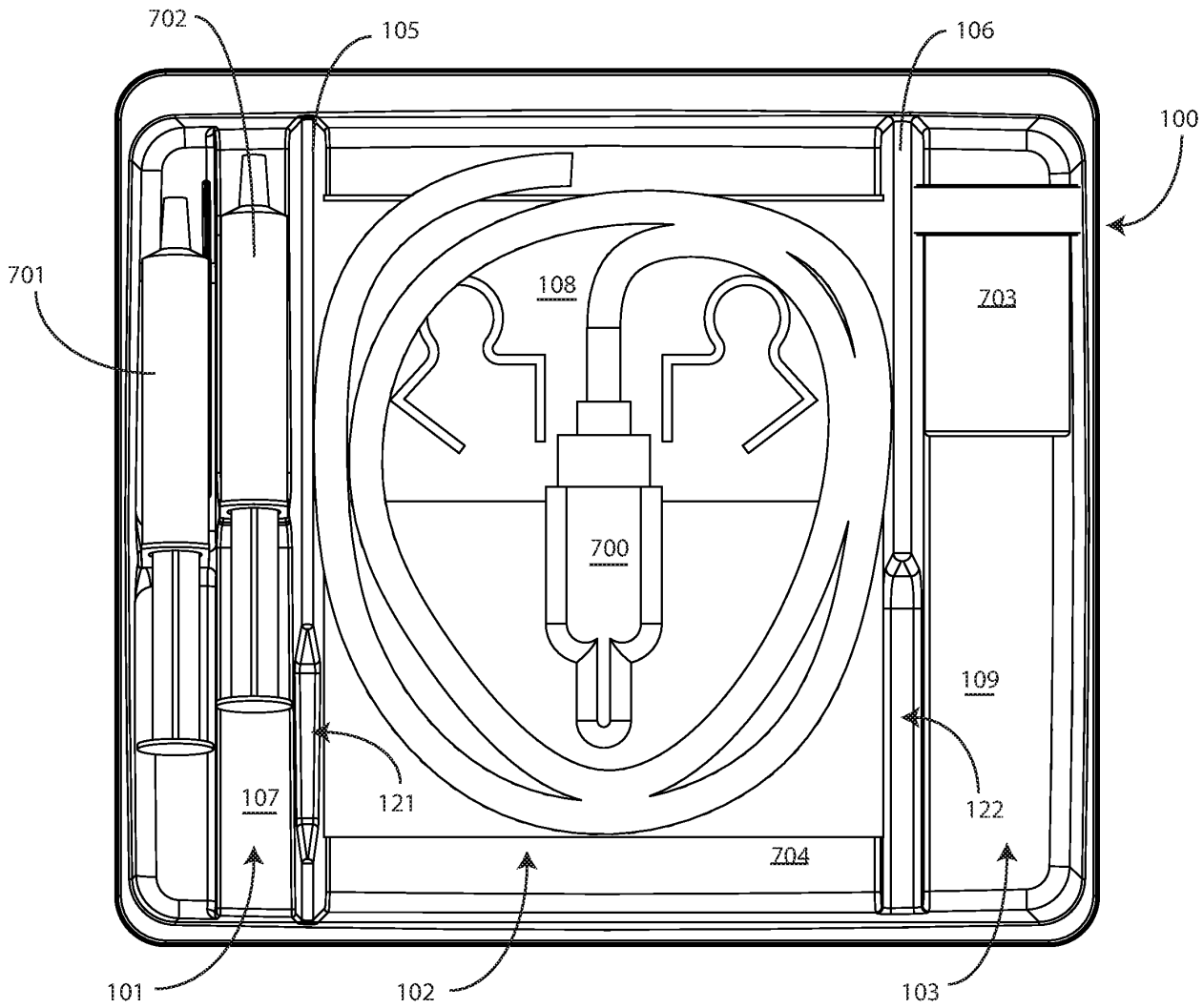

FIG. 8

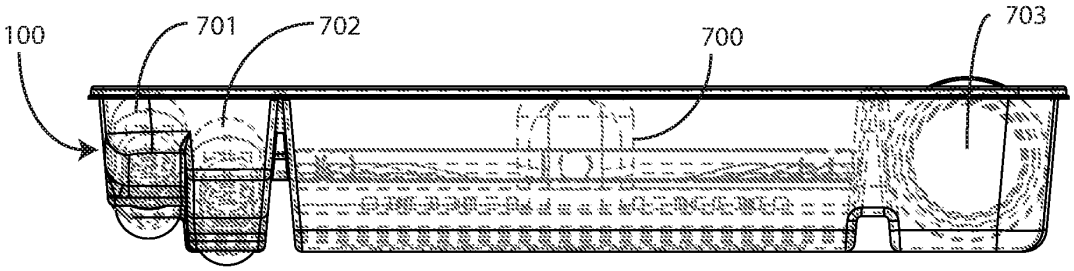
100
701
702
700
703

FIG. 9

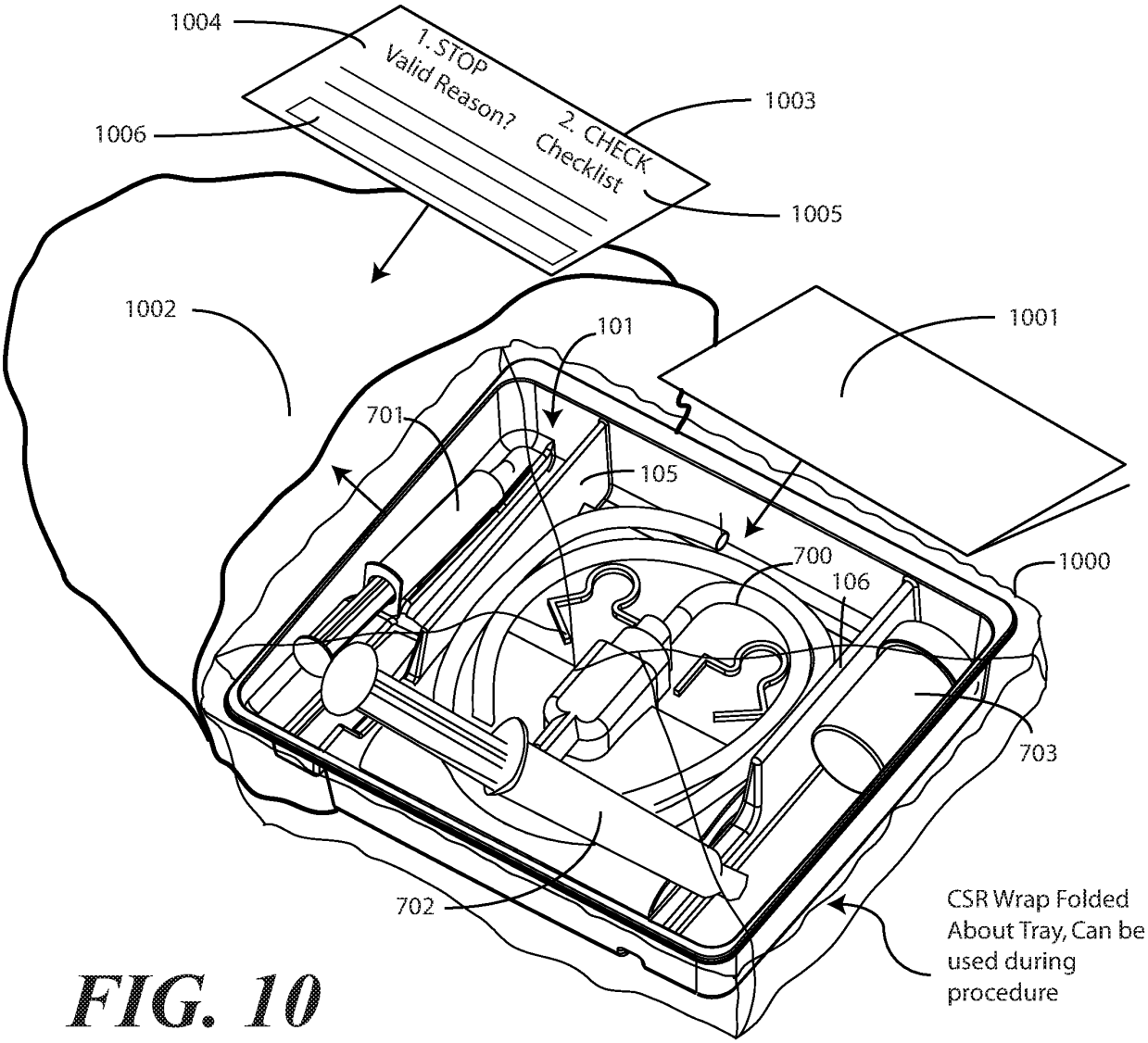
1004
1. STOP
Valid Reason?
2. CHECK
Checklist
1003
1006
1005
1002
101
1001
701
105
700
106
1000
703
702
CSR Wrap Folded
About Tray, Can be
used during
procedure

FIG. 10

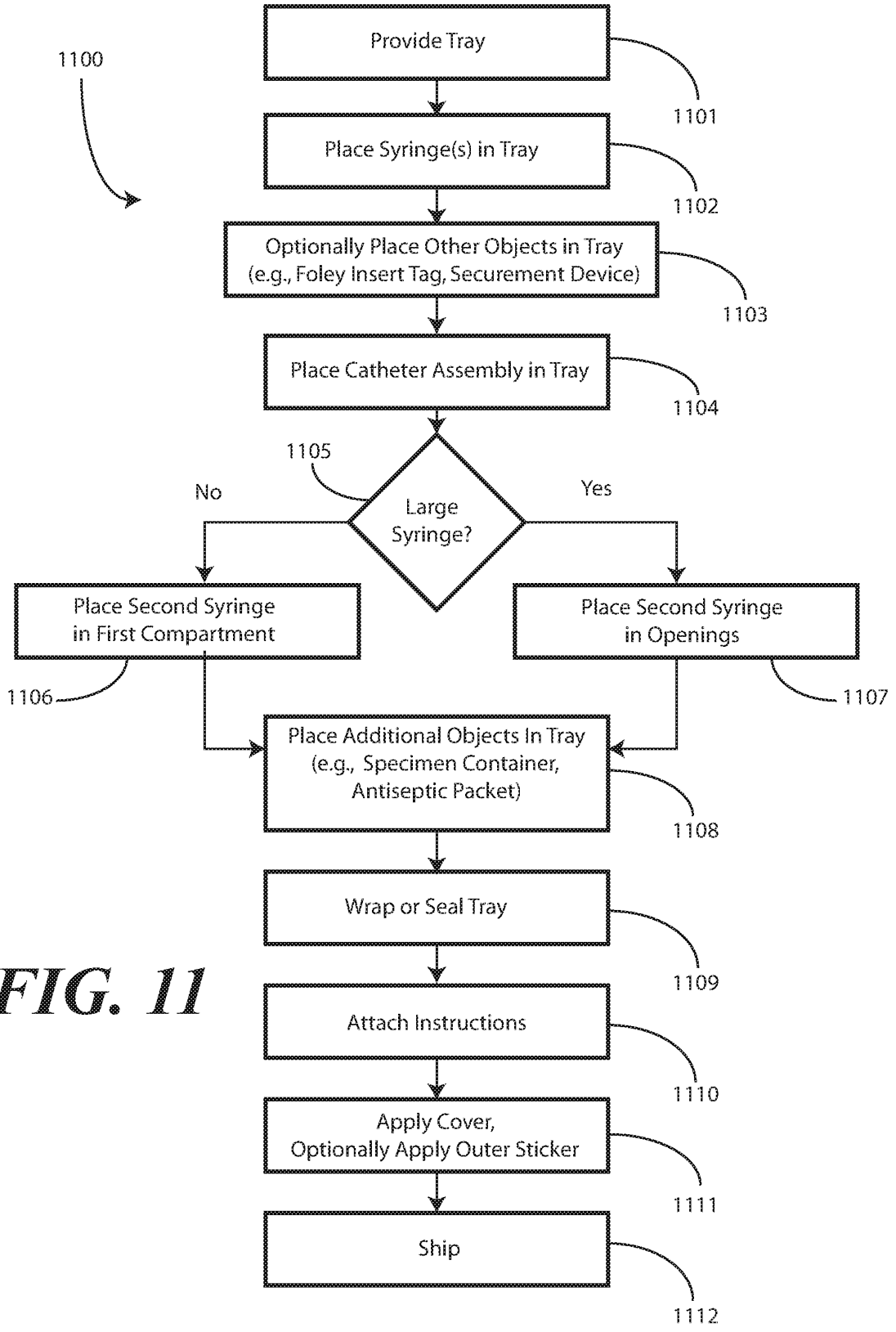
1100
Provide Tray
1101
Place Syringe(s) in Tray
1102
Optionally Place Other Objects in Tray
(e.g., Foley Insert Tag, Securement Device)
1103
Place Catheter Assembly in Tray
1104
1105
Large Syringe?
No
Yes
Place Second Syringe in First Compartment
1106
Place Second Syringe in Openings
1107
Place Additional Objects In Tray
(e.g., Specimen Container, Antiseptic Packet)
1108
Wrap or Seal Tray
1109
Attach Instructions
1110
Apply Cover,
Optionally Apply Outer Sticker
1111
Ship
1112

FIG. 11

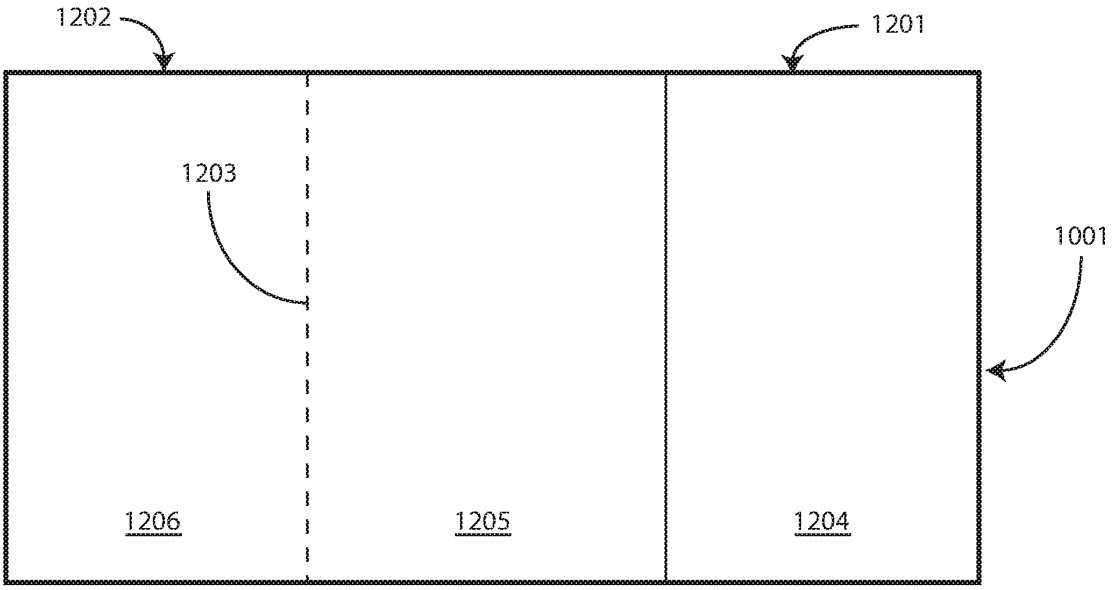
1202
1201
1203
1001
1206
1205
1204

FIG. 12

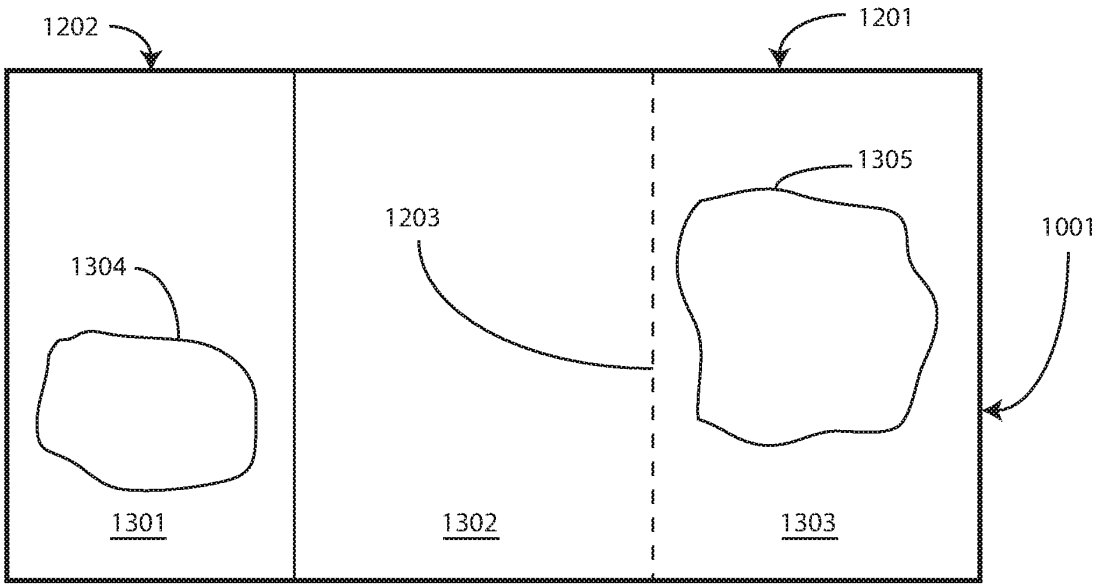
1202
1201
1305
1203
1001
1304
1301
1302
1303

FIG. 13

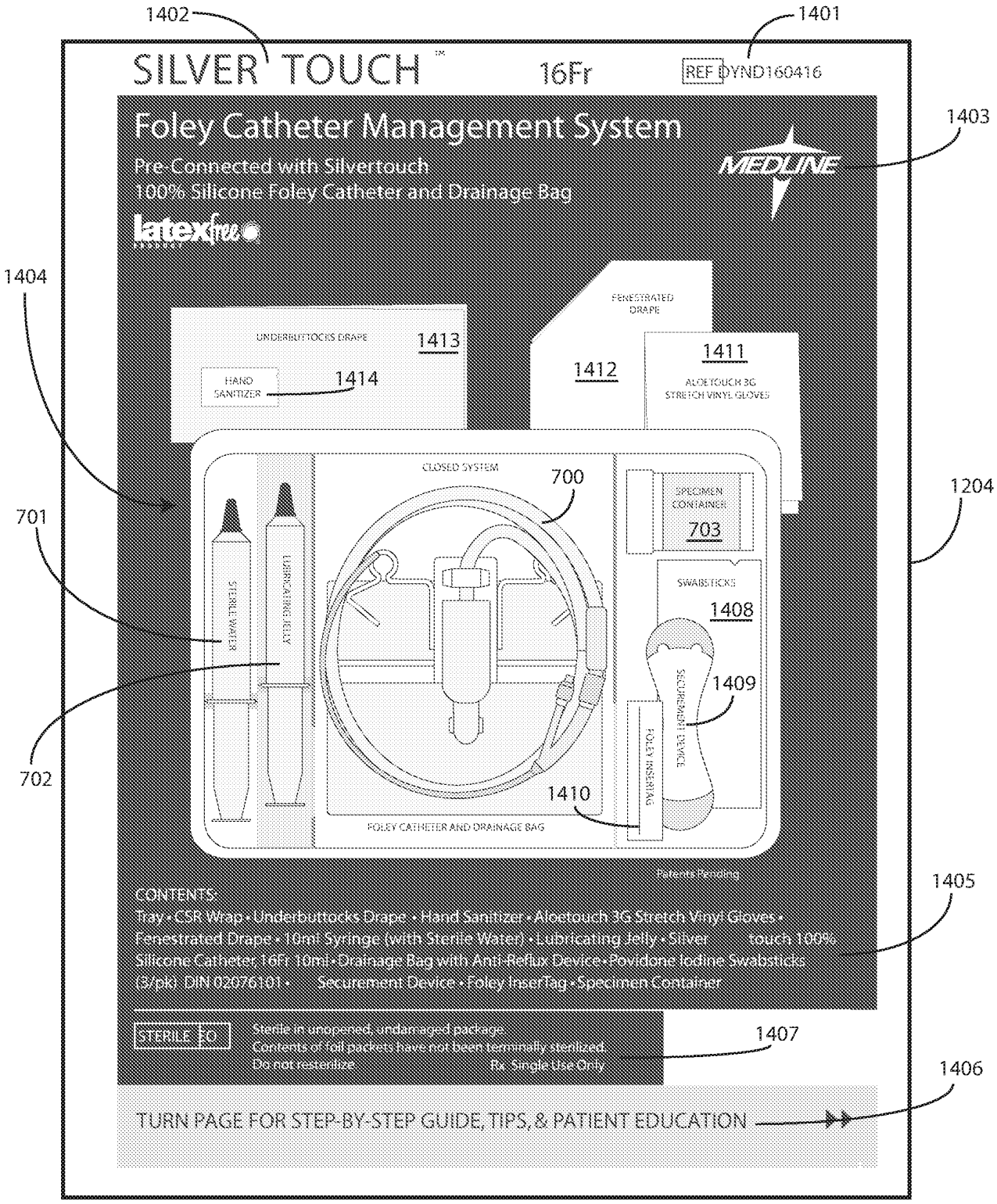
1402
1401
SILVER TOUCH™
16Fr
REF DYND160416
Foley Catheter Management System
Pre-Connected with Silvertouch
100% Silicone Foley Catheter and Drainage Bag
1403
MEDLINE
latexfree
1404
UNDERBUTTOCKS DRAPE
1413
HAND SANITIZER
1414
FENESTRATED DRAPE
1412
1411
ALOETOUCH 3G STRETCH VINYL GLOVES
CLOSED SYSTEM
700
SPECIMEN CONTAINER
703
1204
701
STERILE WATER
LUBRICATING JELLY
SWABSTICKS
1408
1409
SECUREMENT DEVICE
FOLEY INSERTAG
702
1410
FOLEY CATHETER AND DRAINAGE BAG
Patents Pending
1405
CONTENTS:
Tray • CSR Wrap • Underbuttocks Drape • Hand Sanitizer • Aloetouch 3G Stretch Vinyl Gloves • Fenestrated Drape • 10ml Syringe (with Sterile Water) • Lubricating Jelly • Silver touch 100% Silicone Catheter 16Fr 10ml • Drainage Bag with Anti-Reflux Device • Povidone Iodine Swabsticks (3/pk) DIN 02076101 • Securement Device • Foley InserTag • Specimen Container
STERILE EO
Sterile in unopened, undamaged package
Contents of foil packets have not been terminally sterilized.
Do not resterilize
Rx Single Use Only
1407
1406
TURN PAGE FOR STEP-BY-STEP GUIDE, TIPS, & PATIENT EDUCATION

FIG. 14

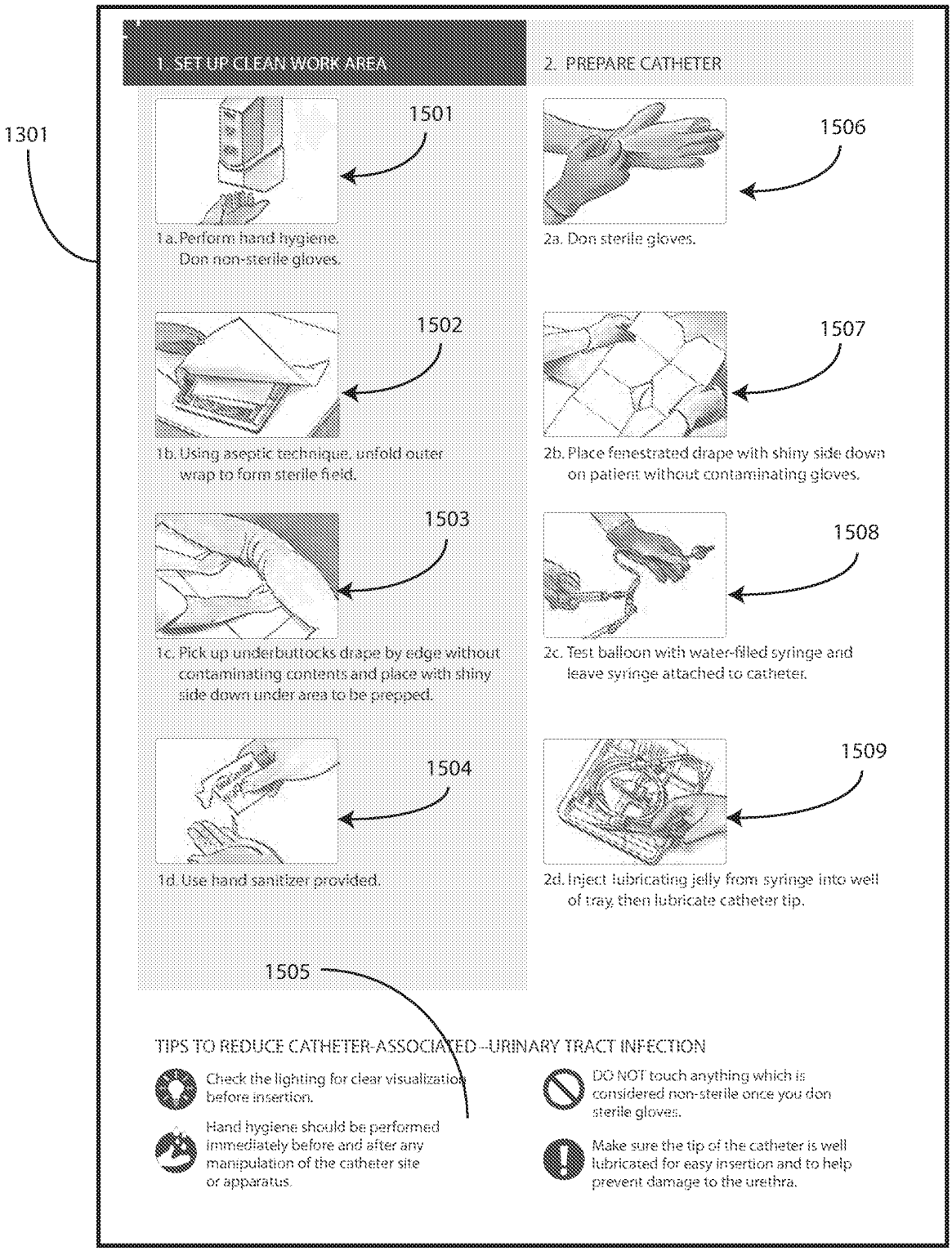
1301
1. SET UP CLEAN WORK AREA
1501
1a. Perform hand hygiene. Don non-sterile gloves.
1502
1b. Using aseptic technique, unfold outer wrap to form sterile field.
1503
1c. Pick up underbuttocks drape by edge without contaminating contents and place with shiny side down under area to be prepped.
1504
1d. Use hand sanitizer provided.
2. PREPARE CATHETER
1506
2a. Don sterile gloves.
1507
2b. Place fenestrated drape with shiny side down on patient without contaminating gloves.
1508
2c. Test balloon with water-filled syringe and leave syringe attached to catheter.
1509
2d. Inject lubricating jelly from syringe into well of tray, then lubricate catheter tip.
1505
TIPS TO REDUCE CATHETER-ASSOCIATED--URINARY TRACT INFECTION
Check the lighting for clear visualization before insertion.
Hand hygiene should be performed immediately before and after any manipulation of the catheter site or apparatus.
DO NOT touch anything which is considered non-sterile once you don sterile gloves.
Make sure the tip of the catheter is well lubricated for easy insertion and to help prevent damage to the urethra.

FIG. 15

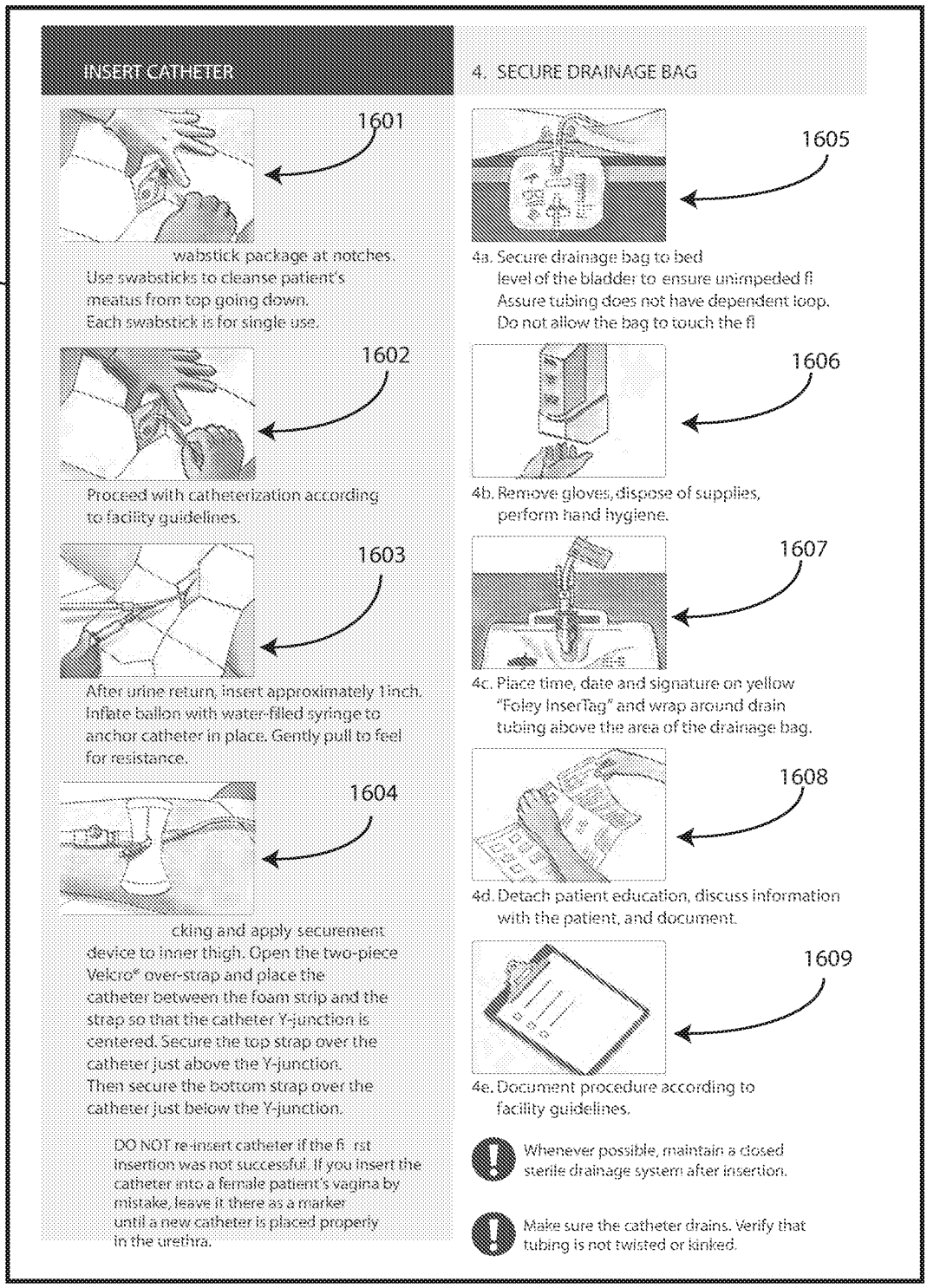
1302
INSERT CATHETER
1601
wabstick package at notches.
Use swabsticks to cleanse patient's
meatus from top going down.
Each swabstick is for single use.
1602
Proceed with catheterization according
to facility guidelines.
1603
After urine return, insert approximately 1inch.
Inflate ballon with water-filled syringe to
anchor catheter in place. Gently pull to feel
for resistance.
1604
cking and apply securement
device to inner thigh. Open the two-piece
Velcro® over-strap and place the
catheter between the foam strip and the
strap so that the catheter Y-junction is
centered. Secure the top strap over the
catheter just above the Y-junction.
Then secure the bottom strap over the
catheter just below the Y-junction.
DO NOT re-insert catheter if the fi rst
insertion was not successful. If you insert the
catheter into a female patient's vagina by
mistake, leave it there as a marker
until a new catheter is placed properly
in the urethra.
4. SECURE DRAINAGE BAG
1605
4a. Secure drainage bag to bed
level of the bladder to ensure unimpeded fl
Assure tubing does not have dependent loop.
Do not allow the bag to touch the fl
1606
4b. Remove gloves, dispose of supplies,
perform hand hygiene.
1607
4c. Place time, date and signature on yellow
"Foley InserTag" and wrap around drain
tubing above the area of the drainage bag.
1608
4d. Detach patient education, discuss information
with the patient, and document.
1609
4e. Document procedure according to
facility guidelines.
Whenever possible, maintain a closed
sterile drainage system after insertion.
Make sure the catheter drains. Verify that
tubing is not twisted or kinked.

FIG. 16

PATIENT EDUCATION: INFORMATION ABOUT CATHETERIZATION

1701

1302

1. What is a urinary catheter?

A thin flexible tube that drains urine from the bladder into a collection bag.

The catheter helps:

- When you can't urinate.
- To measure how much urine you're producing.
- During and after some surgeries or tests.

1702

2. What should you know about your catheter?

Only a trained provider inserts a catheter when necessary, and it is removed as soon as possible.

- Caregivers must wash hands with soap or use alcohol-based rubs before and after touching your catheter.
- If your caregivers don't clean their hands, it is o.k. to ask them to do so.
- Do not disconnect the catheter yourself.
- Ask every day whether you still need the catheter.

1703

3. Can you reduce your chances of getting an infection?

Absolutely!

- Wash your hands before and after touching your catheter.
- Make sure the tube is secured to your leg. Never twist, kink, or tug on it.
- Always keep the collection bag below the level of your belly button.
- Tell somebody whenever the bag is more than half full.

FIG. 17

1206

PATIENT EDUCATION: INFORMATION ABOUT CATHETERIZATION

4. What is a 'catheter-associated' urinary tract infection (UTI)?

Some helpful germs live in our urinary tract. But if a catheter introduces 'outside' germs, they can cause an infection. That's why hands must be washed before handling your catheter. It's also why catheters must be removed as soon as possible.

1801

5. What are some symptoms if you have a urinary tract infection (UTI)?

- Sudden fever and/or bloody urine.
- Burning or painful urination, or pain below the stomach.
- Frequent, or more urgent, urinating after catheter is removed.

Tell your physician/provider right away, because an antibiotic may be needed.

1802

6. What about when you're going home?

- If you'll be using a catheter, make sure your health care provider fully explains how to care for it.
- Be sure to find out who to contact if you have questions after you get home.

1803

My physician's/provider's information:

_____

Phone Number: _____

1804

Adapted from: Centers for Disease Control and Prevention. FAQs about "Catheter-Associated Urinary Tract Infection." Available at: http://www.cdc.gov/ncidod/dhqp/pdf/guidelines/CA-UTI_tagged.pdf. Accessed March 25, 2009.

©2009 Medline Industries, Inc., Silvertouch and Aloetouch are trademarks of Medline Industries, Inc. Assembled in USA by Medline Industries, Inc., Mundelein, IL 60060-4486 USA. Distributed in Canada by Medline Canada Corp., Oakville, Ontario L2L6R2™. www.medline.com 1-800-MEDLINE DYND160416 RG09/DYN 807590

FIG. 18

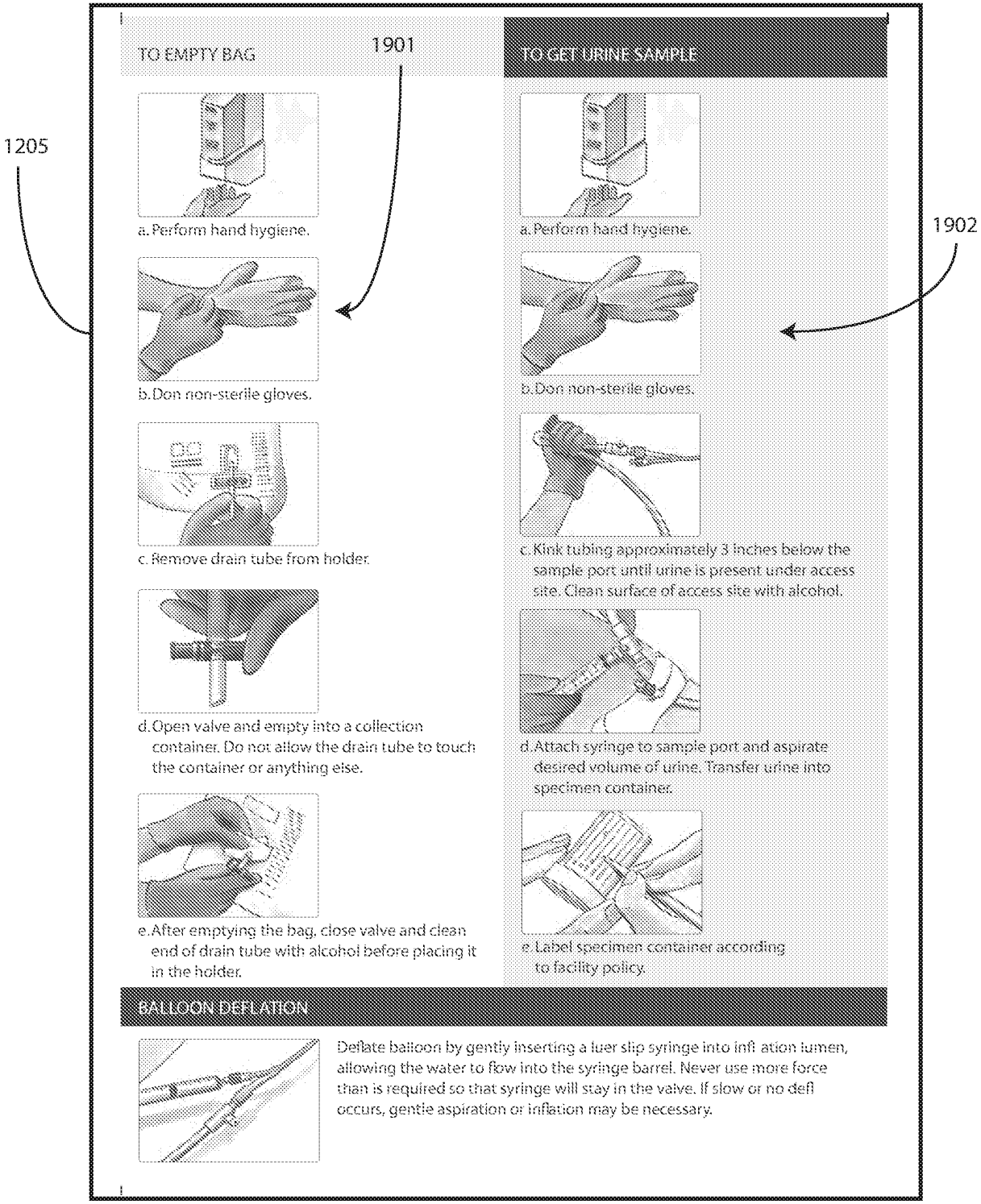
1205
1901
1902
TO EMPTY BAG
a. Perform hand hygiene.
b. Don non-sterile gloves.
c. Remove drain tube from holder.
d. Open valve and empty into a collection container. Do not allow the drain tube to touch the container or anything else.
e. After emptying the bag, close valve and clean end of drain tube with alcohol before placing it in the holder.
TO GET URINE SAMPLE
a. Perform hand hygiene.
b. Don non-sterile gloves.
c. Kink tubing approximately 3 inches below the sample port until urine is present under access site. Clean surface of access site with alcohol.
d. Attach syringe to sample port and aspirate desired volume of urine. Transfer urine into specimen container.
e. Label specimen container according to facility policy.
BALLOON DEFLATION
Deflate balloon by gently inserting a luer slip syringe into infl ation lumen, allowing the water to flow into the syringe barrel. Never use more force than is required so that syringe will stay in the valve. If slow or no defl occurs, gentle aspiration or inflation may be necessary.

FIG. 19

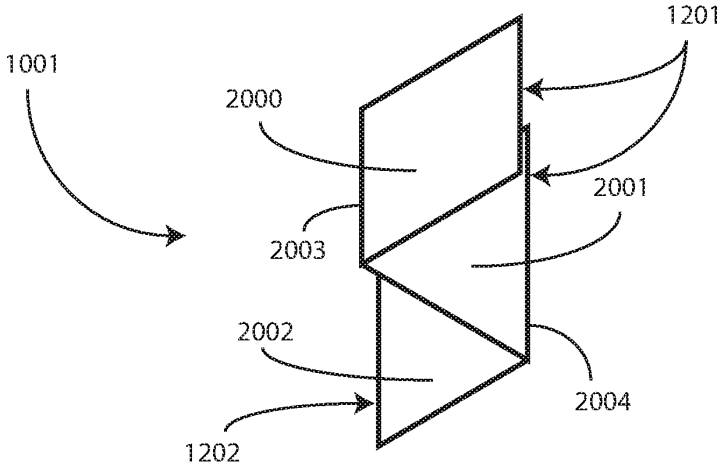
1001
2000
1201
2001
2003
2002
2004
1202

FIG. 20

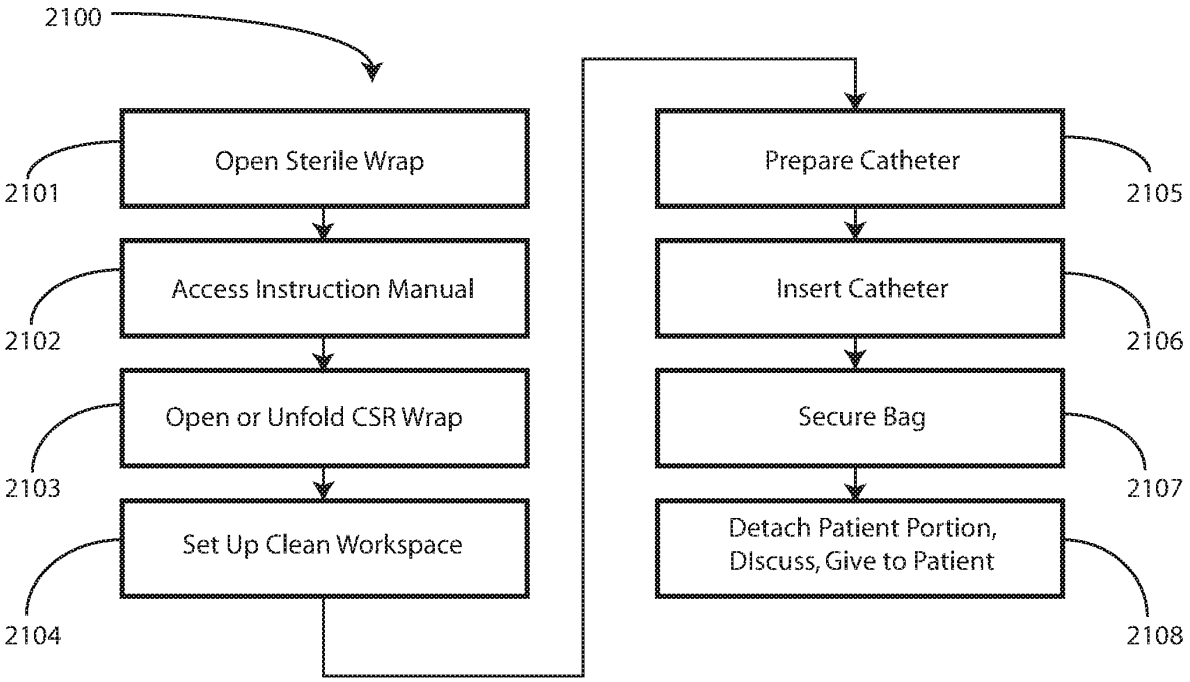
2100
Open Sterile Wrap
2101
Access Instruction Manual
2102
Open or Unfold CSR Wrap
2103
Set Up Clean Workspace
2104
Prepare Catheter
2105
Insert Catheter
2106
Secure Bag
2107
Detach Patient Portion, Discuss, Give to Patient
2108

FIG. 21

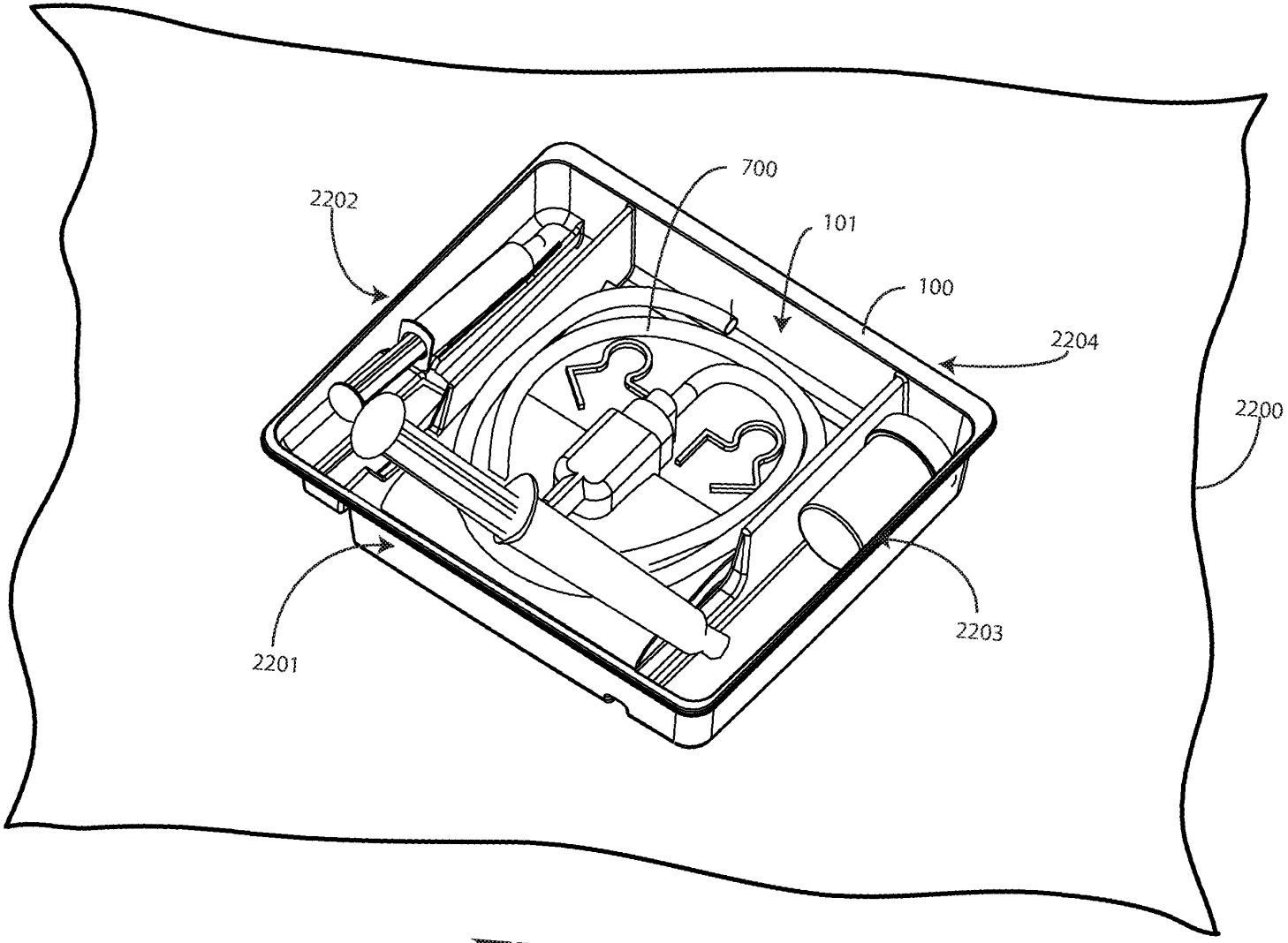

FIG. 22

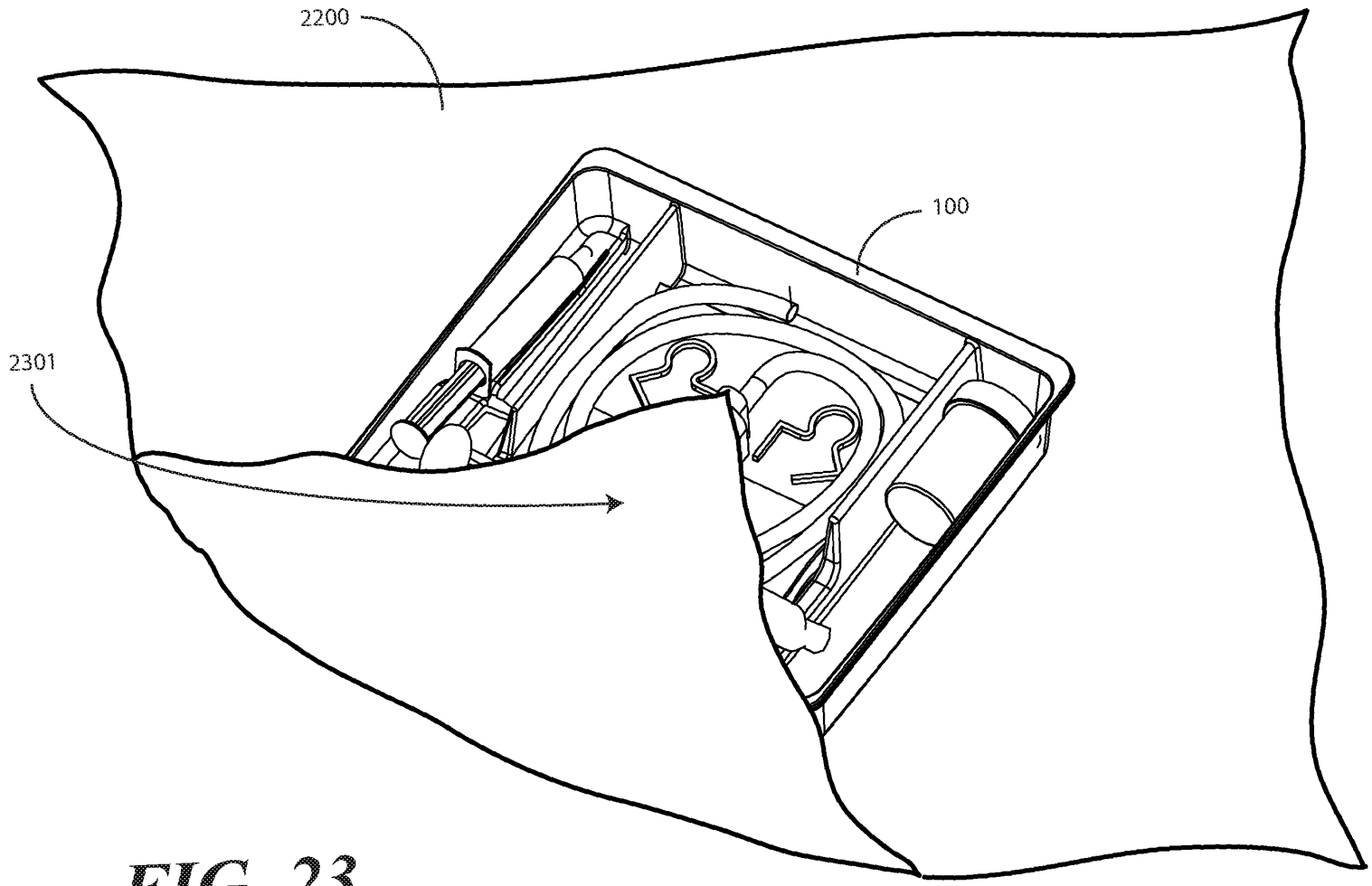

FIG. 23

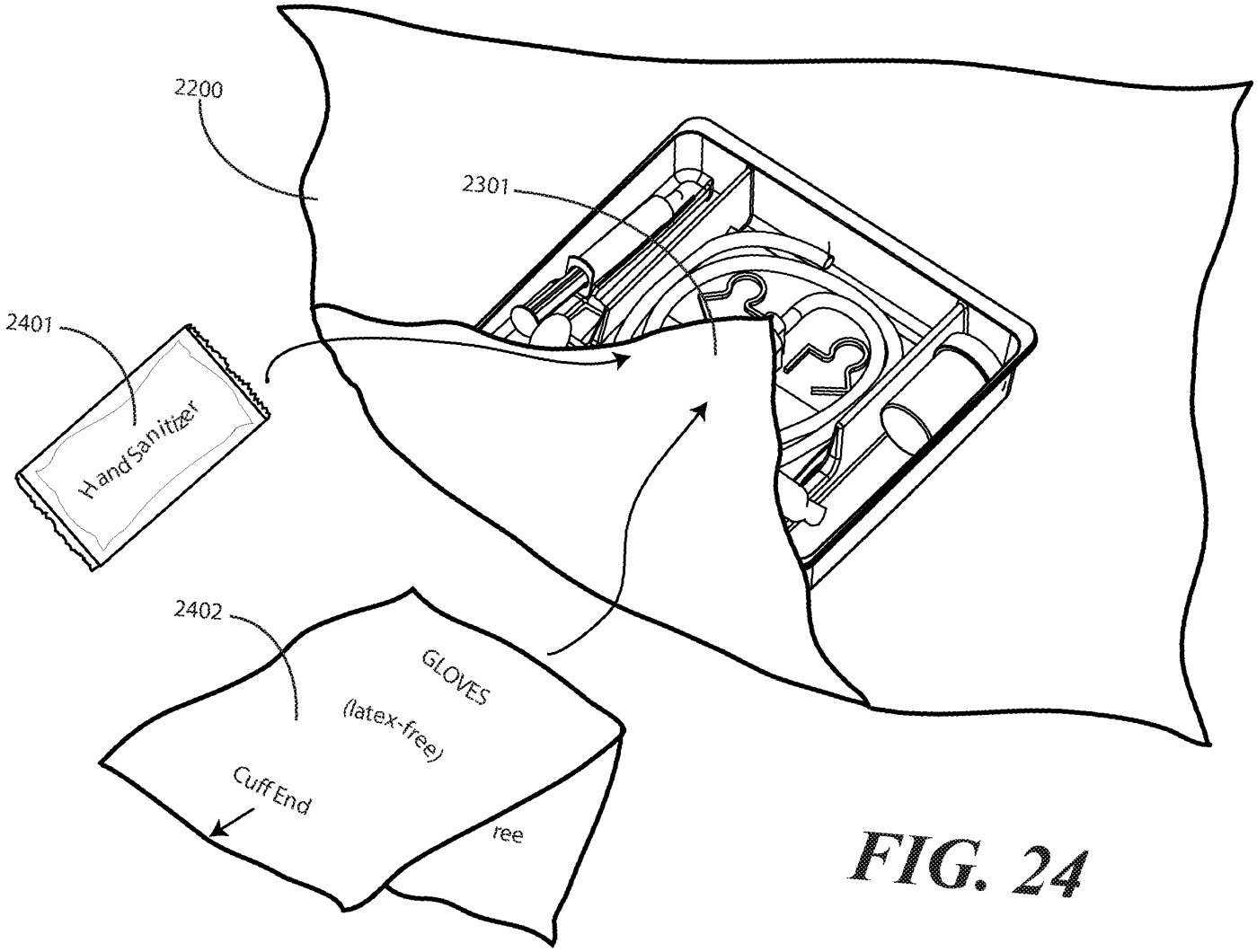
2200
2301
2401
Hand Sanitizer
2402
GLOVES
(latex-free)
Cuff End
ree

FIG. 24

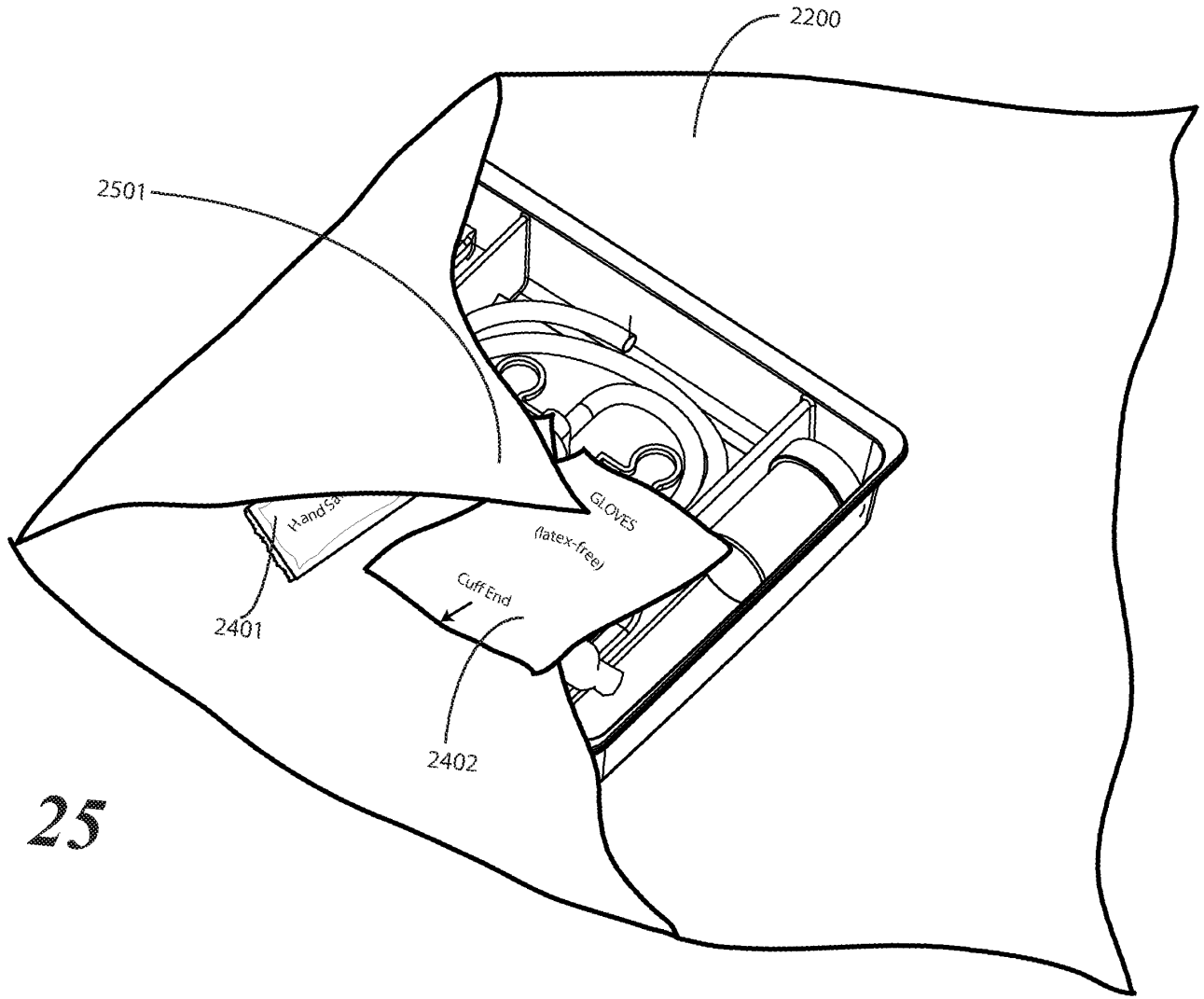

FIG. 25

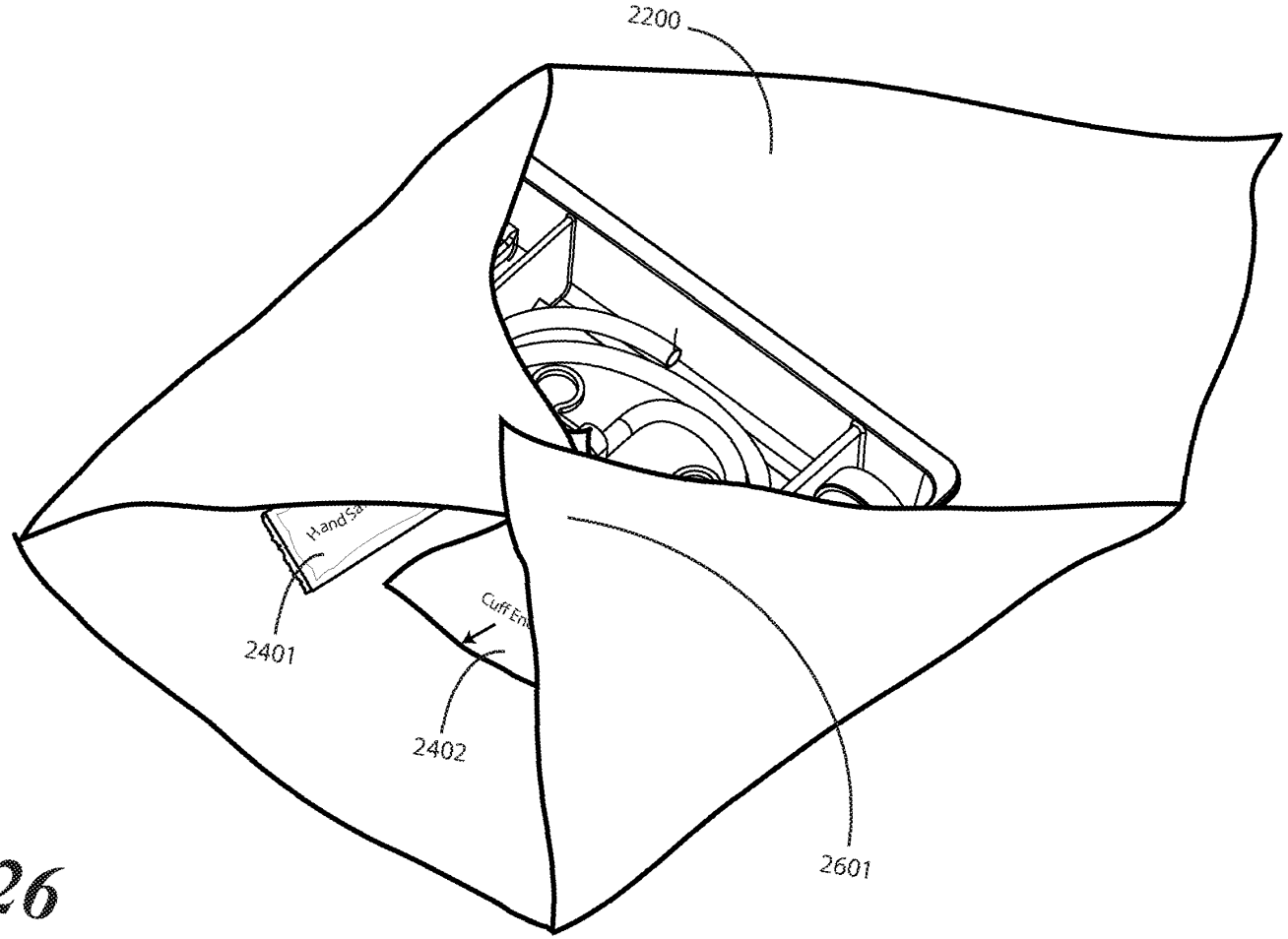

FIG. 26

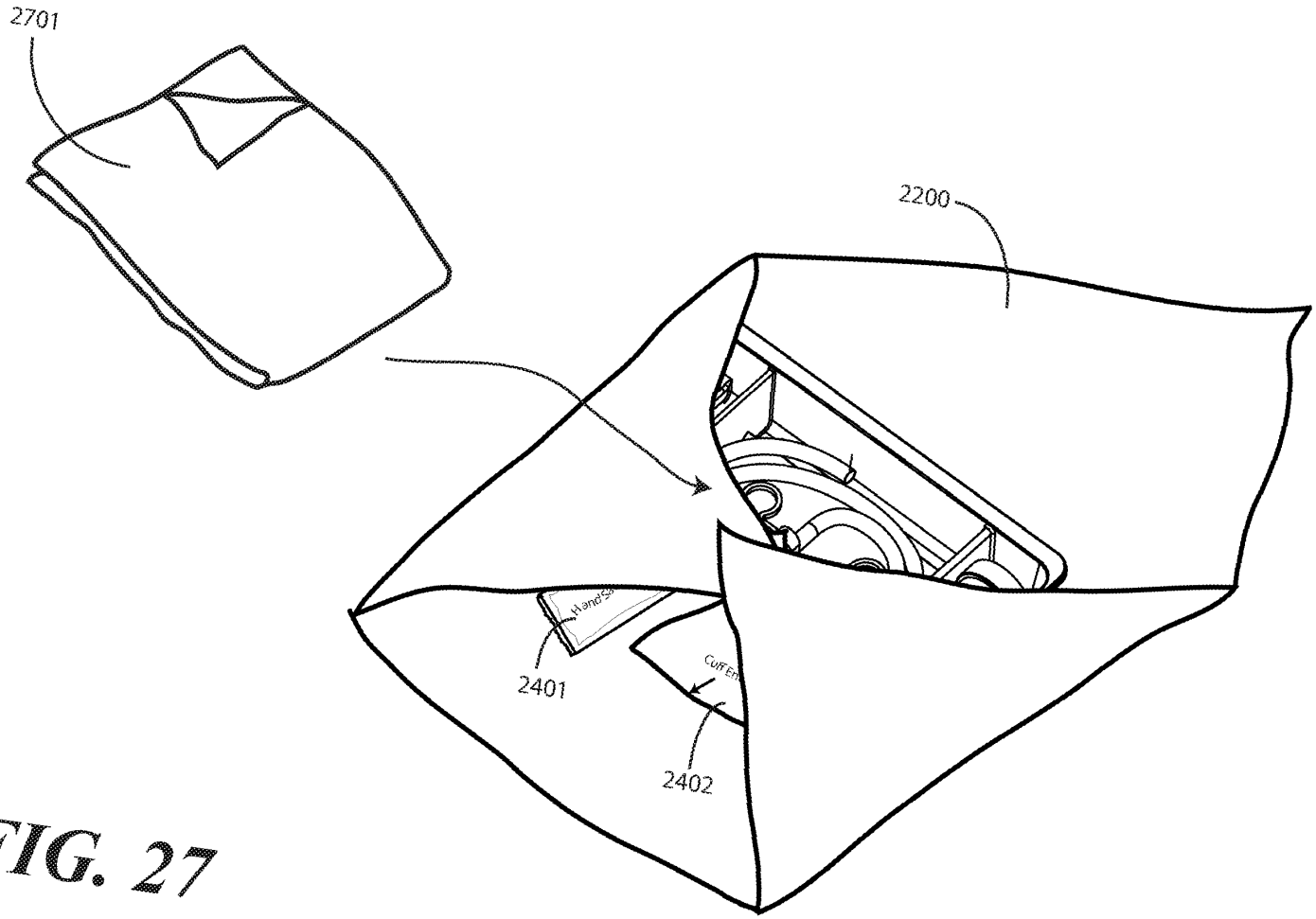

FIG. 27

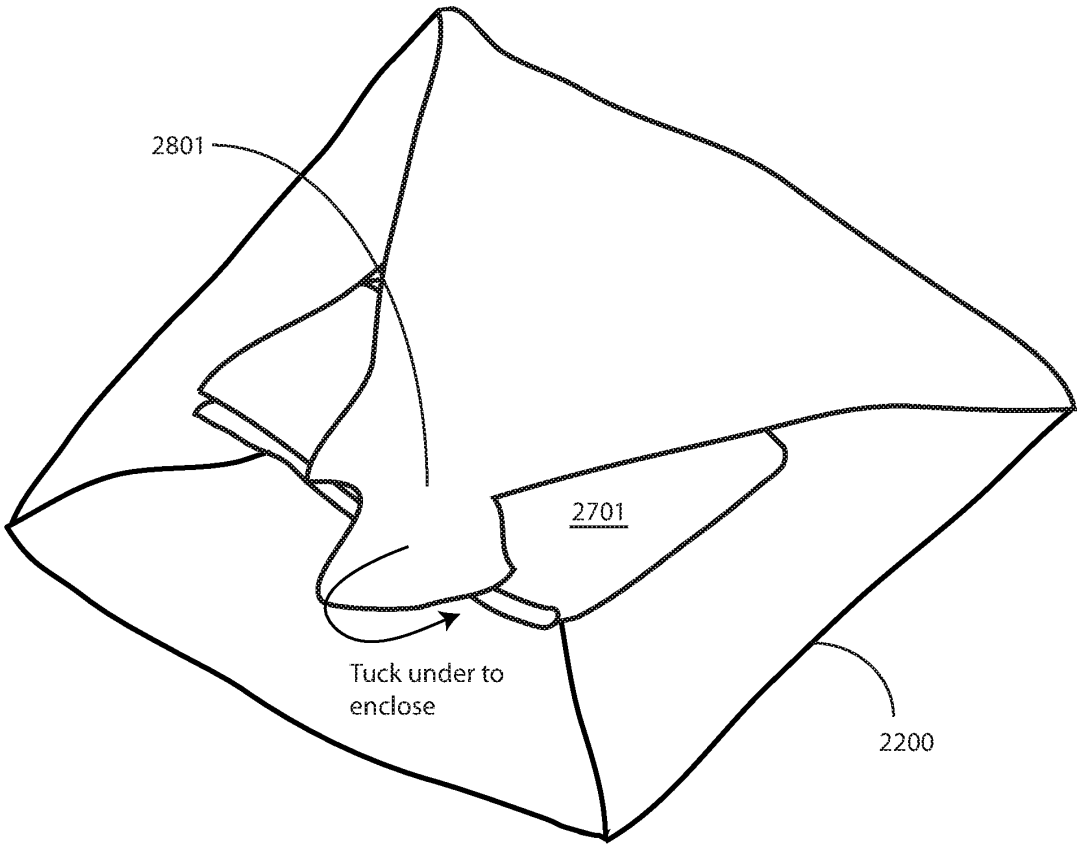

FIG. 28

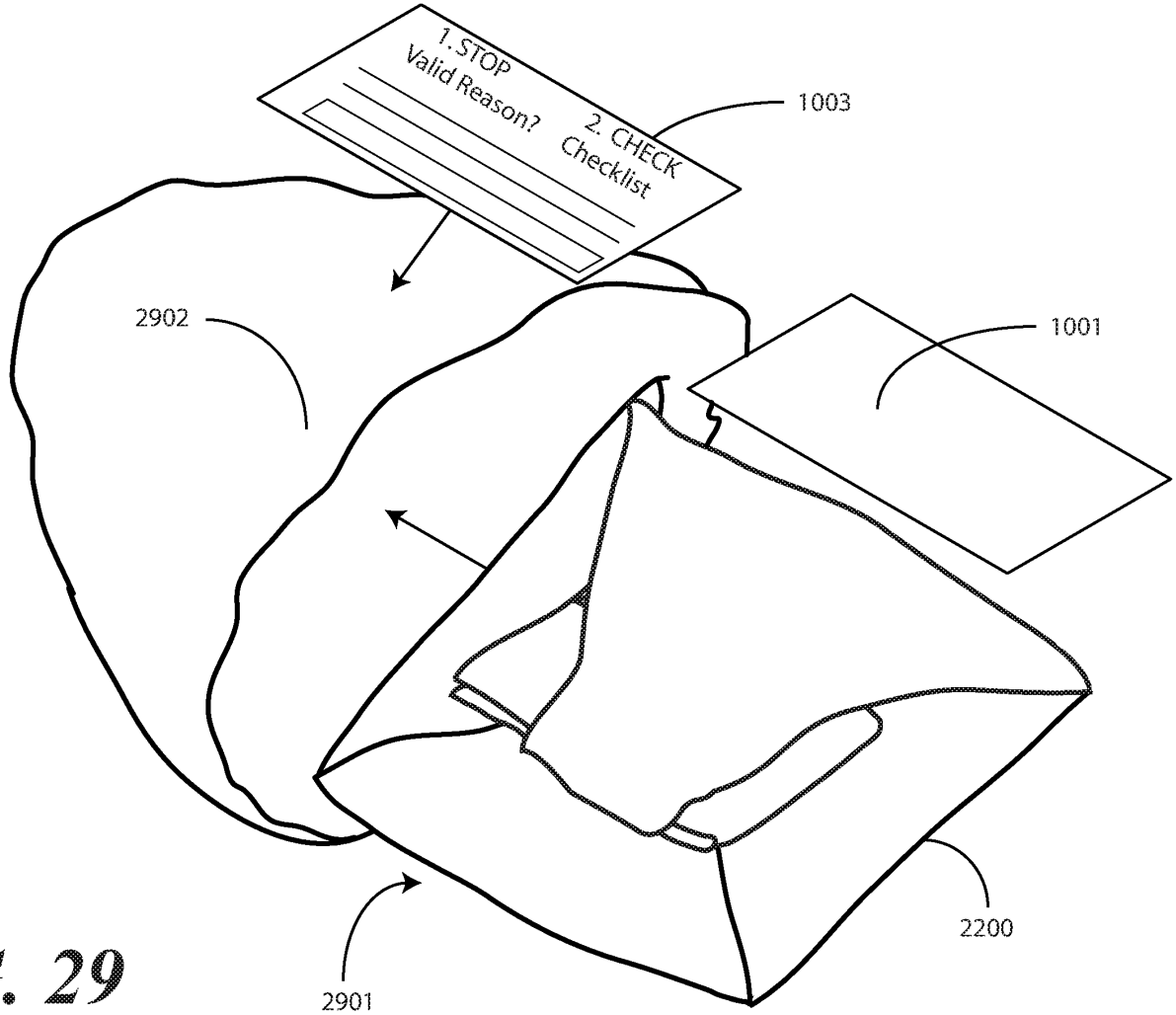
1. STOP
Valid Reason?
2. CHECK
Checklist
1003
2902
1001
2200
2901

FIG. 29

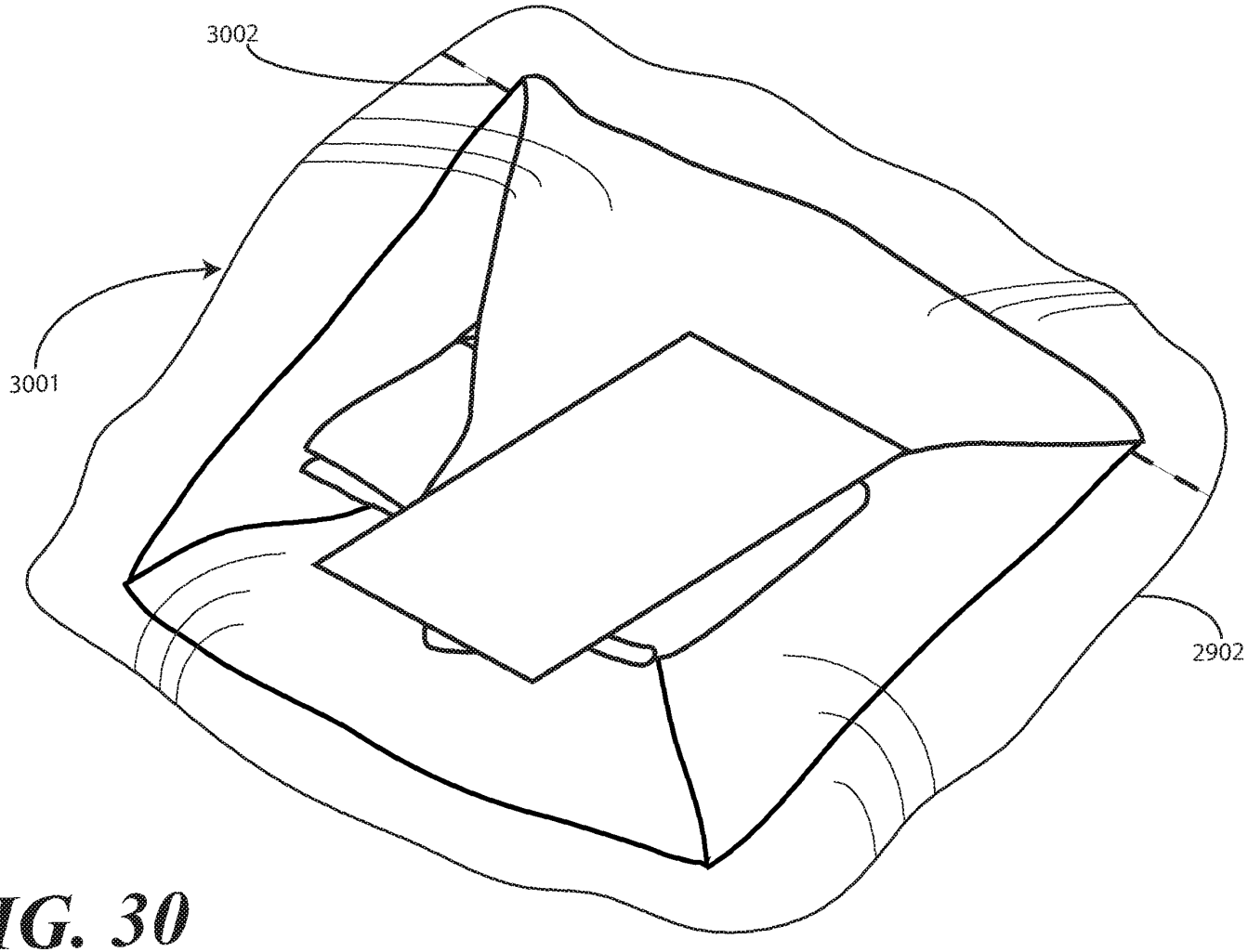

FIG. 30

Bard Exhibit 1004.0098

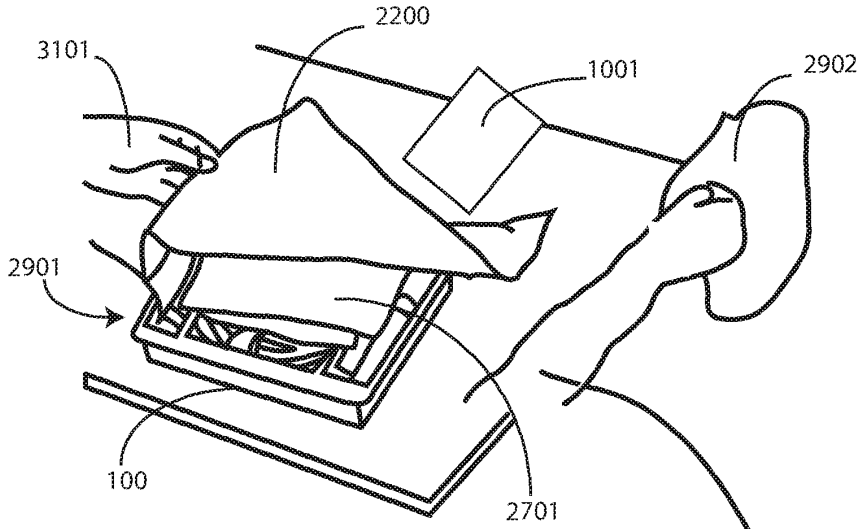

FIG. 31

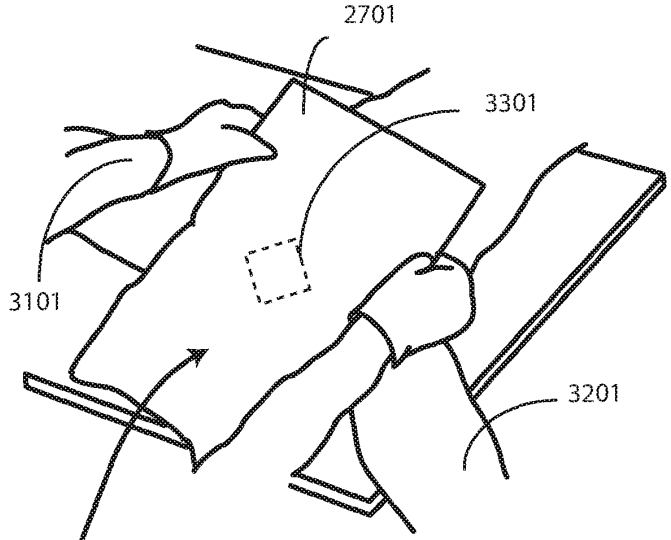

FIG. 33

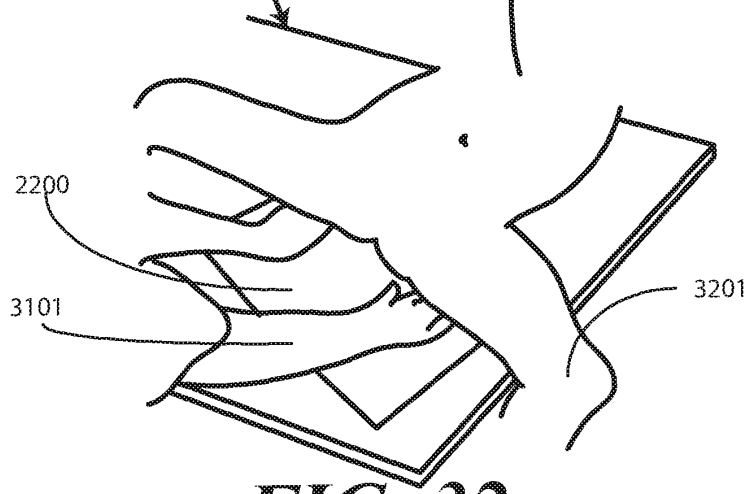

FIG. 32

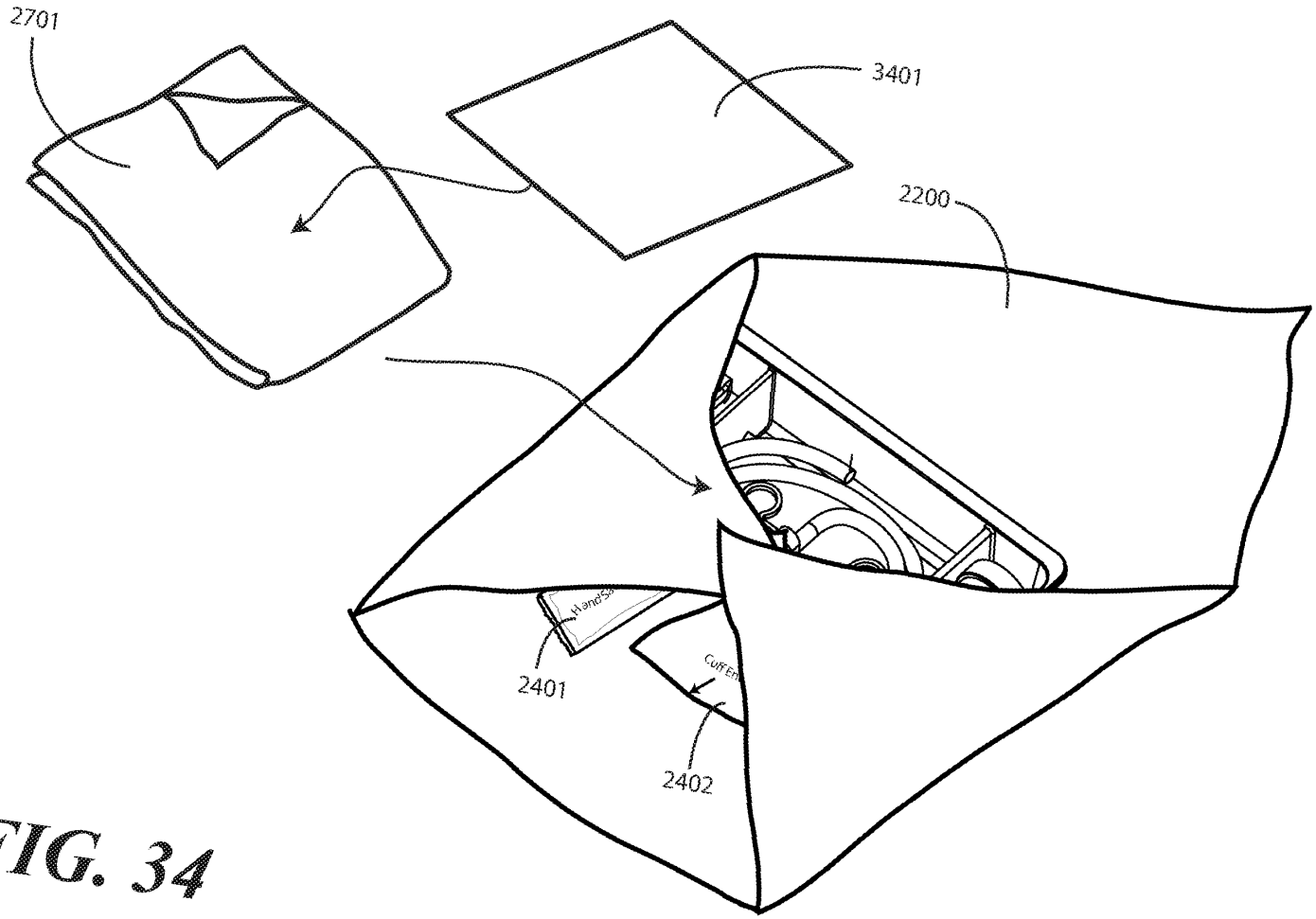

FIG. 34

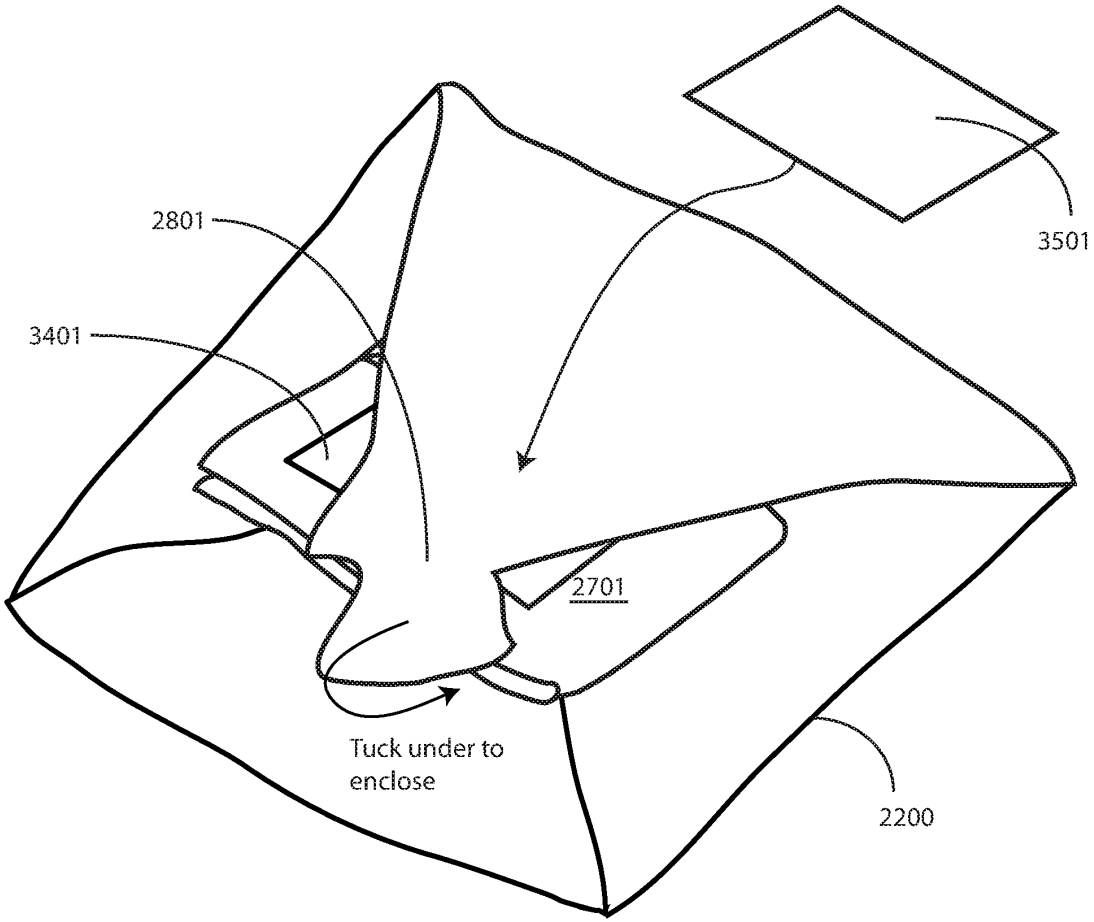

FIG. 35

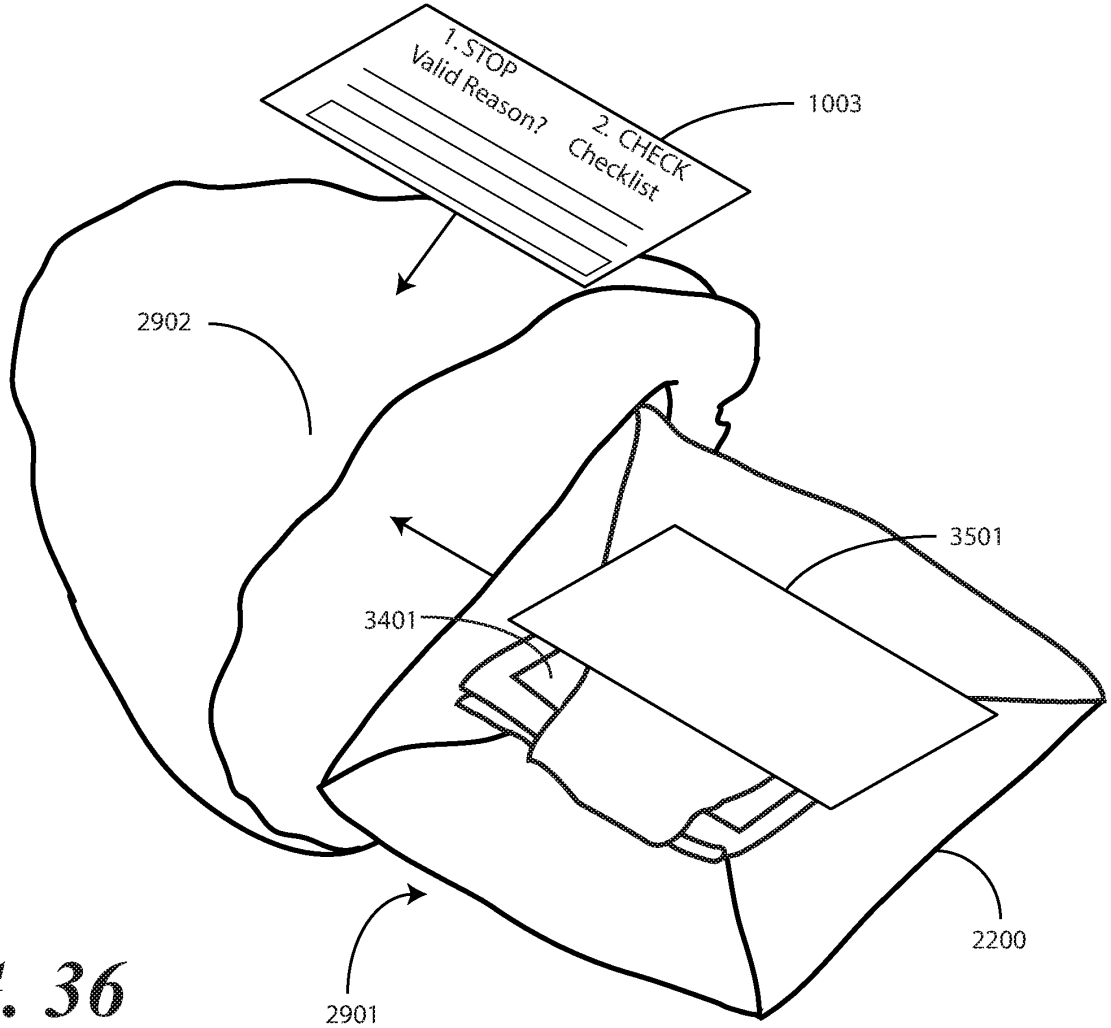
1. STOP
Valid Reason?
2. CHECK
Checklist
1003
2902
3501
3401
2200
2901

FIG. 36

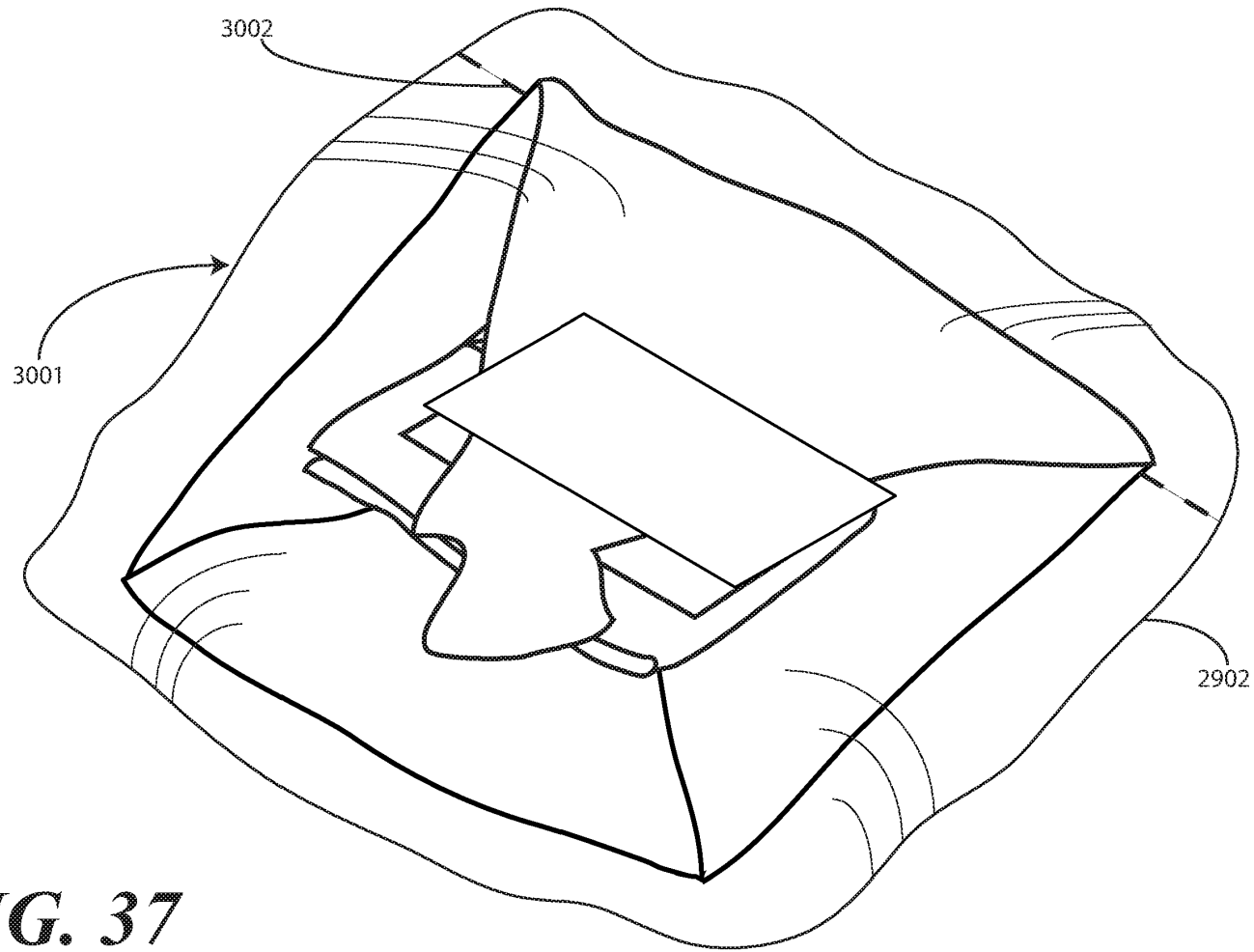

FIG. 37

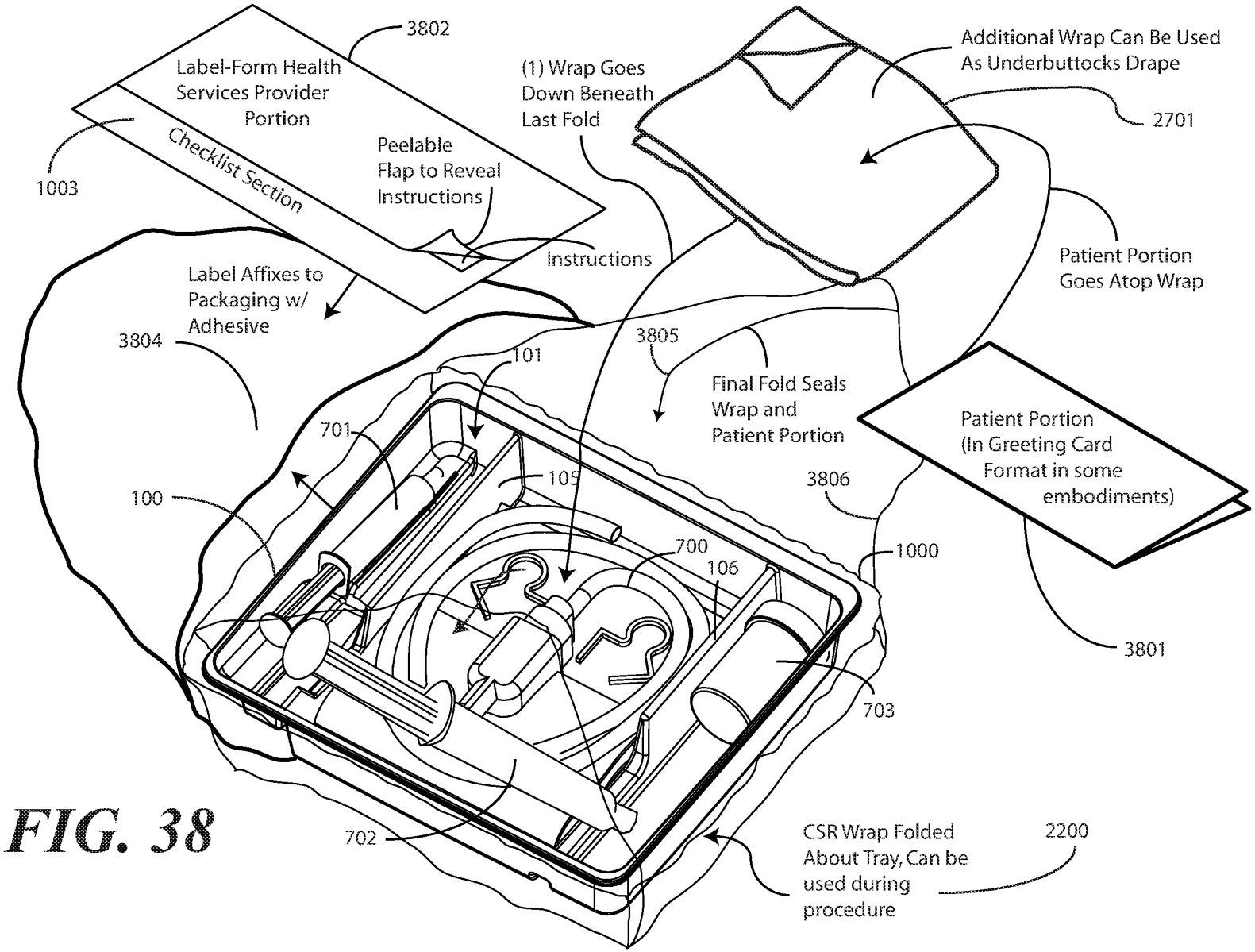
3802
Label-Form Health Services Provider Portion
Checklist Section
1003
Peelable Flap to Reveal Instructions
Instructions
(1) Wrap Goes Down Beneath Last Fold
Additional Wrap Can Be Used As Underbuttocks Drape
2701
Patient Portion Goes Atop Wrap
Label Affixes to Packaging w/ Adhesive
3804
3805
Final Fold Seals Wrap and Patient Portion
101
701
105
100
3806
Patient Portion (In Greeting Card Format in some embodiments)
700
106
1000
3801
703
702
CSR Wrap Folded About Tray, Can be used during procedure
2200

FIG. 38

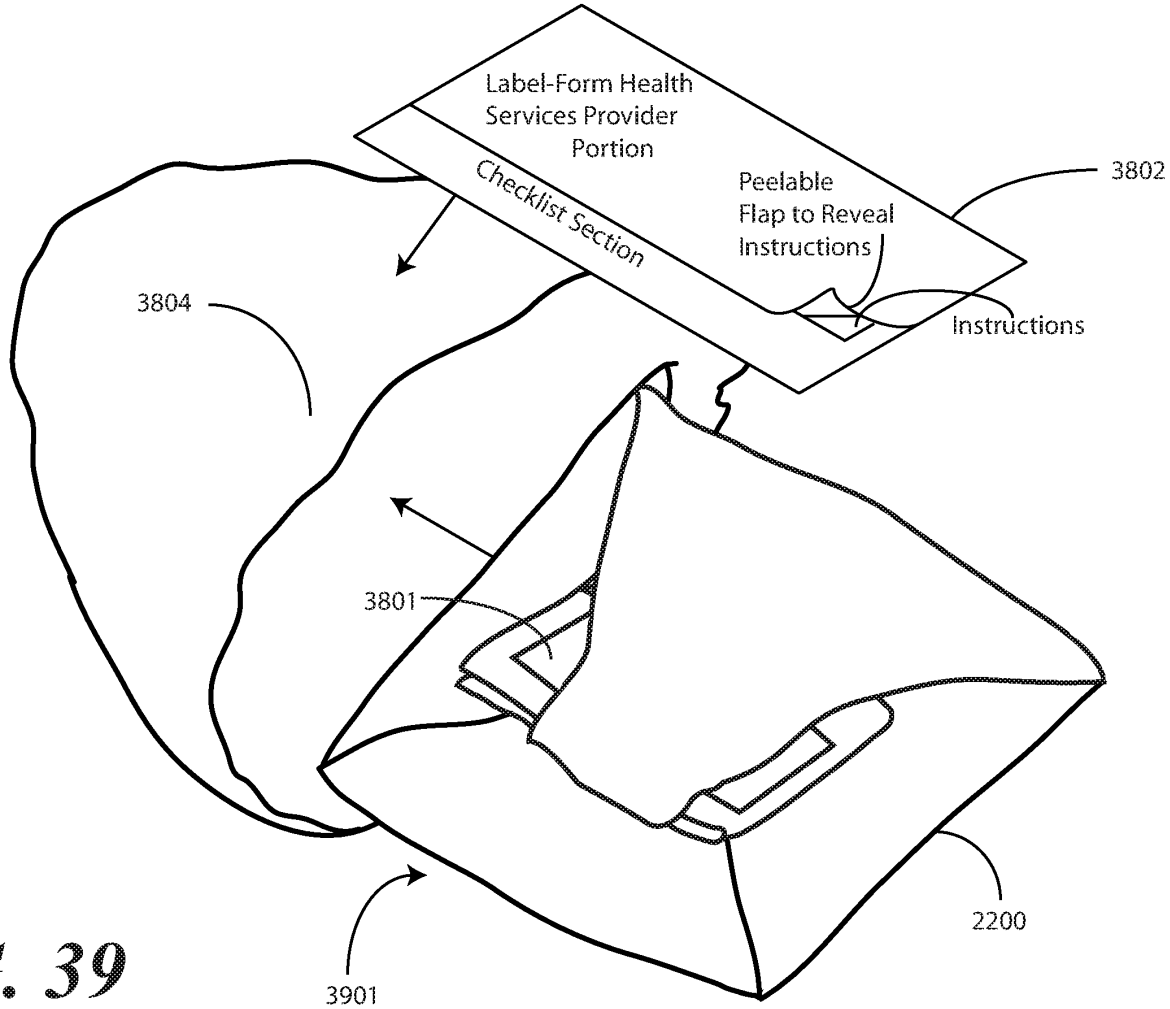
Label-Form Health
Services Provider
Portion
Checklist Section
Peelable
Flap to Reveal
Instructions
Instructions
3802
3804
3801
2200
3901

FIG. 39

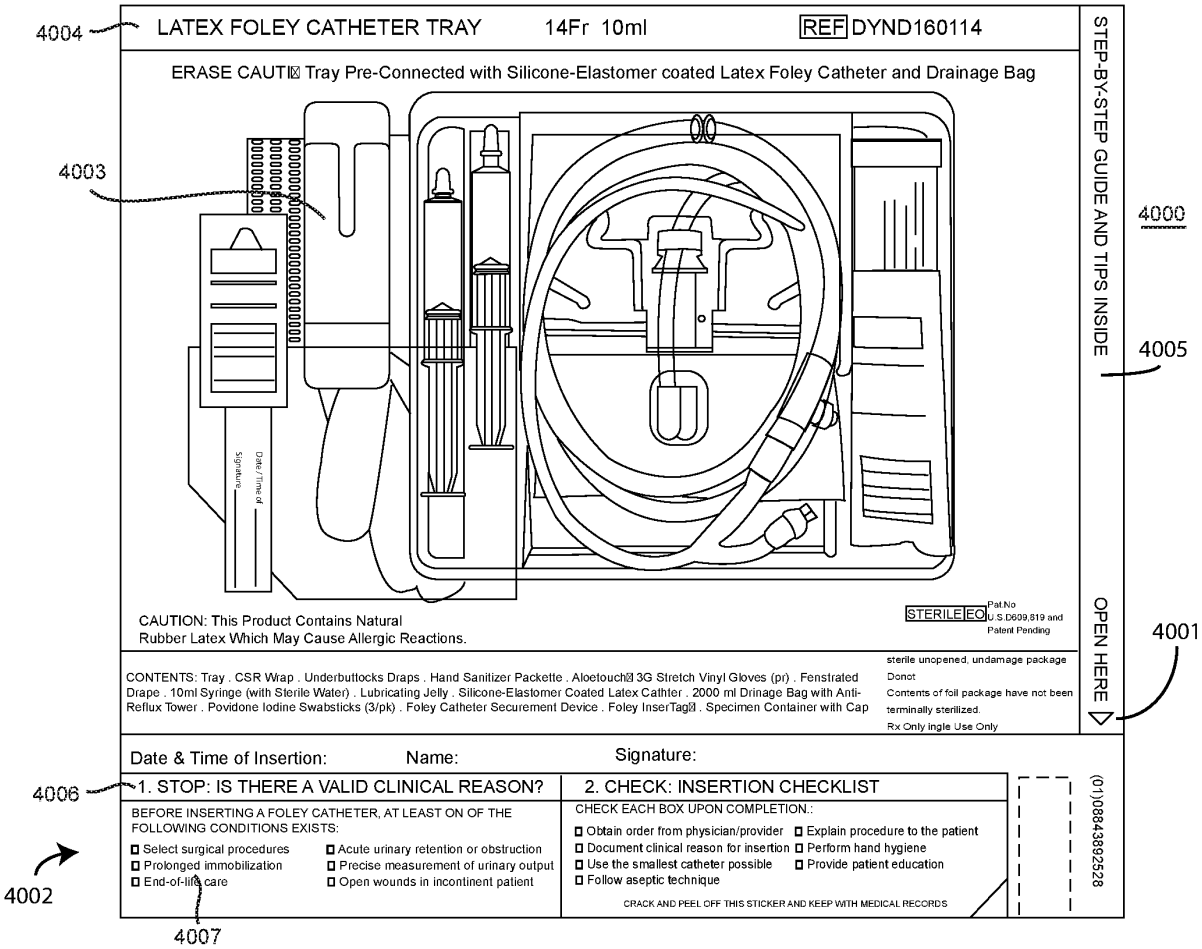
4004
LATEX FOLEY CATHETER TRAY
14Fr 10ml
REF DYND160114
ERASE CAUTI Tray Pre-Connected with Silicone-Elastomer coated Latex Foley Catheter and Drainage Bag
4003
Date / Time of
Signature
CAUTION: This Product Contains Natural
Rubber Latex Which May Cause Allergic Reactions.
STERILE EO
Pat.No
U.S.D609,819 and
Patent Pending
CONTENTS: Tray . CSR Wrap . Underbuttocks Draps . Hand Sanitizer Packette . Aloetouch 3G Stretch Vinyl Gloves (pr) . Fenstrated Drape . 10ml Syringe (with Sterile Water) . Lubricating Jelly . Silicone-Elastomer Coated Latex Cathter . 2000 ml Drinage Bag with Anti-Reflux Tower . Povidone Iodine Swabsticks (3/pk) . Foley Catheter Securement Device . Foley InserTag . Specimen Container with Cap
sterile unopened, undamage package
Donot
Contents of foil package have not been
terminally sterilized.
Rx Only ingle Use Only
STEP-BY-STEP GUIDE AND TIPS INSIDE
4000
4005
OPEN HERE
4001
Date & Time of Insertion:
Name:
Signature:
4006
1. STOP: IS THERE A VALID CLINICAL REASON?
2. CHECK: INSERTION CHECKLIST
BEFORE INSERTING A FOLEY CATHETER, AT LEAST ON OF THE FOLLOWING CONDITIONS EXISTS:
Select surgical procedures
Prolonged immobilization
End-of-life care
Acute urinary retention or obstruction
Precise measurement of urinary output
Open wounds in incontinent patient
CHECK EACH BOX UPON COMPLETION.:
Obtain order from physician/provider
Document clinical reason for insertion
Use the smallest catheter possible
Follow aseptic technique
Explain procedure to the patient
Perform hand hygiene
Provide patient education
CRACK AND PEEL OFF THIS STICKER AND KEEP WITH MEDICAL RECORDS
(01)08843892528
4002
4007

FIG. 40

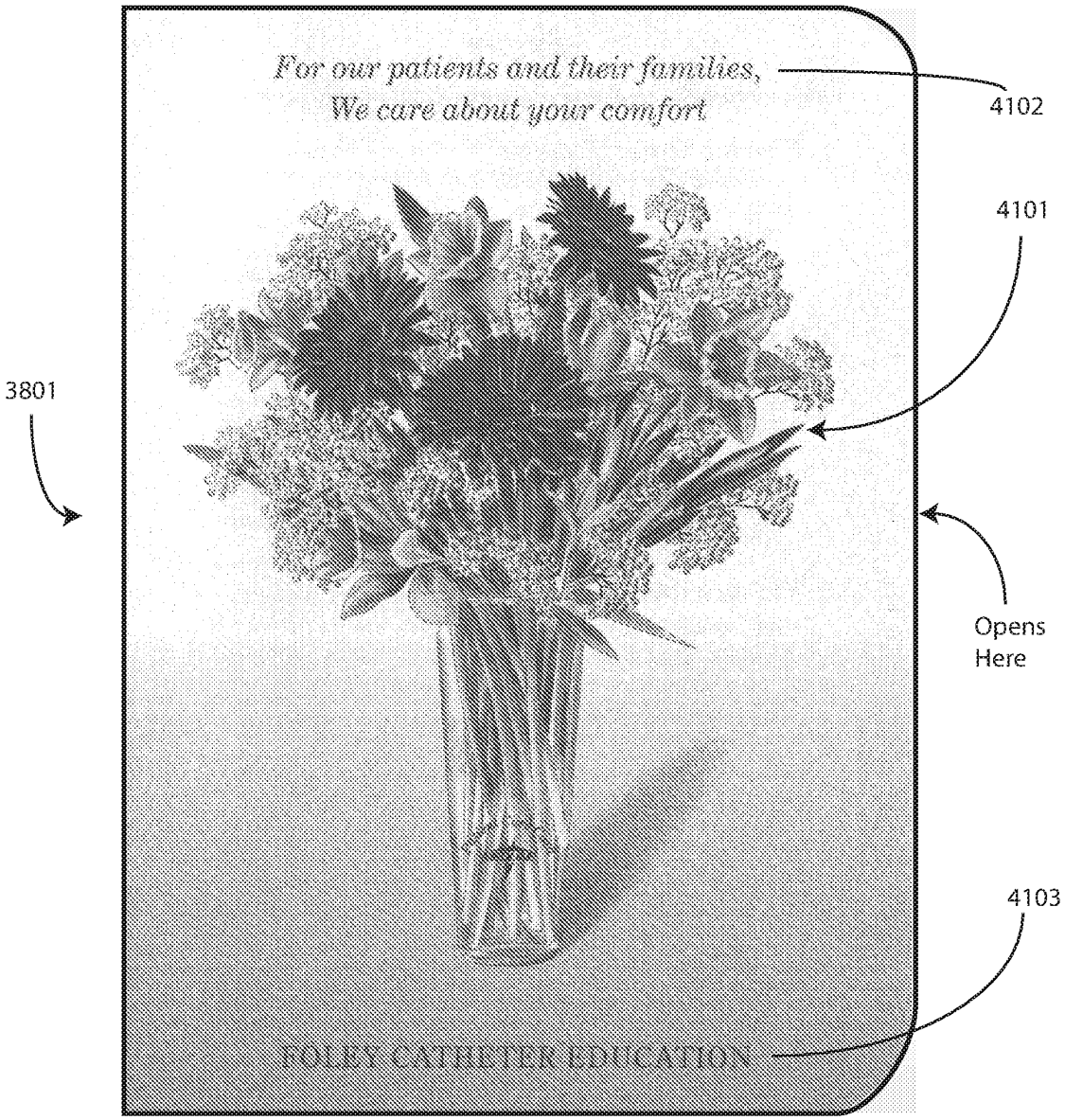
For our patients and their families,
We care about your comfort
4102
4101
3801
Opens
Here
4103
FOLEY CATHETER EDUCATION

FIG. 41

PTO/AIA/01 (08-12)
Approved for use through 01/31/2014. OMB 0651-0032
U.S. Patent and Trademark Office; U.S. DEPARTMENT OF COMMERCE
Under the Paperwork Reduction Act of 1995, no persons are required to respond to a collection of information unless it displays a valid OMB control number

DECLARATION (37 CFR 1.63) FOR UTILITY OR DESIGN APPLICATION USING AN APPLICATION DATA SHEET (37 CFR 1.76)

Title of Invention: Catheter Tray, Packaging System, Instruction Insert, and Associated Methods

As the below named inventor, I hereby declare that:

This declaration is directed to: ☒ The attached application, or

☐ United States application or PCT international application number _____

filed on _____.

The above-identified application was made or authorized to be made by me.

I believe that I am the original inventor or an original joint inventor of a claimed invention in the application.

I hereby acknowledge that any willful false statement made in this declaration is punishable under 18 U.S.C. 1001 by fine or imprisonment of not more than five (5) years, or both.

WARNING:

Petitioner/applicant is cautioned to avoid submitting personal information in documents filed in a patent application that may contribute to identity theft. Personal information such as social security numbers, bank account numbers, or credit card numbers (other than a check or credit card authorization form PTO-2038 submitted for payment purposes) is never required by the USPTO to support a petition or an application. If this type of personal information is included in documents submitted to the USPTO, petitioners/applicants should consider redacting such personal information from the documents before submitting them to the USPTO. Petitioner/applicant is advised that the record of a patent application is available to the public after publication of the application (unless a non-publication request in compliance with 37 CFR 1.213(a) is made in the application) or issuance of a patent. Furthermore, the record from an abandoned application may also be available to the public if the application is referenced in a published application or an issued patent (see 37 CFR 1.14). Checks and credit card authorization forms PTO-2038 submitted for payment purposes are not retained in the application file and therefore are not publicly available.

LEGAL NAME OF INVENTOR

Inventor: Jennifer E. Tomes Date (Optional): 4/5/2013

Signature: _____

Note: An application data sheet (PTO/SB/14 or equivalent), including naming the entire inventive entity, must accompany this form or must have been previously filed. Use an additional PTO/AIA/01 form for each additional inventor.

This collection of information is required by 35 U.S.C. 115 and 37 CFR 1.63. The information is required to obtain or retain a benefit by the public which is to file (and by the USPTO to process) an application. Confidentiality is governed by 35 U.S.C. 122 and 37 CFR 1.11 and 1.14. This collection is estimated to take 1 minute to complete, including gathering, preparing, and submitting the completed application form to the USPTO. Time will vary depending upon the individual case. Any comments on the amount of time you require to complete this form and/or suggestions for reducing this burden, should be sent to the Chief Information Officer, U.S. Patent and Trademark Office, U.S. Department of Commerce, P.O. Box 1450, Alexandria, VA 22313-1450. DO NOT SEND FEES OR COMPLETED FORMS TO THIS ADDRESS. SEND TO: Commissioner for Patents, P.O. Box 1450, Alexandria, VA 22313-1450.

If you need assistance in completing the form, call 1-800-PTO-9199 and select option 2.

PTO/AIA/01 (05-12)
Approved for use through 01/31/2014. OMB 0651-0032
U.S. Patent and Trademark Office; U.S. DEPARTMENT OF COMMERCE
Under the Paperwork Reduction Act of 1995, no persons are required to respond to a collection of information unless it displays a valid OMB control number.

DECLARATION (37 CFR 1.63) FOR UTILITY OR DESIGN APPLICATION USING AN APPLICATION DATA SHEET (37 CFR 1.76)

Title of Invention	Catheter Tray, Packaging System, Instruction Insert, and Associated Methods

As the below named inventor, I hereby declare that:

This declaration is directed to:

- [x] The attached application, or
- [ ] United States application or PCT international application number _____

filed on _____.

The above-identified application was made or authorized to be made by me.

I believe that I am the original inventor or an original joint inventor of a claimed invention in the application.

I hereby acknowledge that any willful false statement made in this declaration is punishable under 18 U.S.C. 1001 by fine or imprisonment of not more than five (5) years, or both.

WARNING:

Petitioner/applicant is cautioned to avoid submitting personal information in documents filed in a patent application that may contribute to identity theft. Personal information such as social security numbers, bank account numbers, or credit card numbers (other than a check or credit card authorization form PTO-2038 submitted for payment purposes) is never required by the USPTO to support a petition or an application. If this type of personal information is included in documents submitted to the USPTO, petitioners/applicants should consider redacting such personal information from the documents before submitting them to the USPTO. Petitioner/applicant is advised that the record of a patent application is available to the public after publication of the application (unless a non-publication request in compliance with 37 CFR 1.213(a) is made in the application) or issuance of a patent. Furthermore, the record from an abandoned application may also be available to the public if the application is referenced in a published application or an issued patent (see 37 CFR 1.14). Checks and credit card authorization forms PTO-2038 submitted for payment purposes are not retained in the application file and therefore are not publicly available.

LEGAL NAME OF INVENTOR

Inventor: Sarah Dickinson Date (Optional): 4/3/13

Signature: Sarah Dickinson

Note: An application data sheet (PTO/SB/14 or equivalent), including naming the entire inventive entity, must accompany this form or must have been previously filed. Use an additional PTO/AIA/01 form for each additional inventor.

This collection of information is required by 35 U.S.C. 115 and 37 CFR 1.63. The information is required to obtain or retain a benefit by the public which is to file (and by the USPTO to process) an application. Confidentiality is governed by 35 U.S.C. 122 and 37 CFR 1.11 and 1.14. This collection is estimated to take 1 minute to complete, including gathering, preparing, and submitting the completed application form to the USPTO. Time will vary depending upon the individual case. Any comments on the amount of time you require to complete this form and/or suggestions for reducing this burden, should be sent to the Chief Information Officer, U.S. Patent and Trademark Office, U.S. Department of Commerce, P.O. Box 1450, Alexandria, VA 22313-1450. DO NOT SEND FEES OR COMPLETED FORMS TO THIS ADDRESS. SEND TO: Commissioner for Patents, P.O. Box 1450, Alexandria, VA 22313-1450.

If you need assistance in completing the form, call 1-800-PTO-9199 and select option 3.

PTO/AIA/01 (06-12)
Approved for use through 01/31/2014. OMB 0651-0032
U.S. Patent and Trademark Office; U.S. DEPARTMENT OF COMMERCE
Under the Paperwork Reduction Act of 1995, no persons are required to respond to a collection of information unless it displays a valid OMB control number.

DECLARATION (37 CFR 1.63) FOR UTILITY OR DESIGN APPLICATION USING AN APPLICATION DATA SHEET (37 CFR 1.76)

Title of Invention	Catheter Tray, Packaging System, Instruction Insert, and Associated Methods

As the below named inventor, I hereby declare that:

This declaration is directed to:

☐ The attached application, or

☒ United States application or PCT international application number 13/860,902 filed on April 11, 2013.

The above-identified application was made or authorized to be made by me.

I believe that I am the original inventor or an original joint inventor of a claimed invention in the application.

I hereby acknowledge that any willful false statement made in this declaration is punishable under 18 U.S.C. 1001 by fine or imprisonment of not more than five (5) years, or both.

WARNING:

Petitioner/applicant is cautioned to avoid submitting personal information in documents filed in a patent application that may contribute to identity theft. Personal information such as social security numbers, bank account numbers, or credit card numbers (other than a check or credit card authorization form PTO-2038 submitted for payment purposes) is never required by the USPTO to support a petition or an application. If this type of personal information is included in documents submitted to the USPTO, petitioners/applicants should consider redacting such personal information from the documents before submitting them to the USPTO. Petitioner/applicant is advised that the record of a patent application is available to the public after publication of the application (unless a non-publication request in compliance with 37 CFR 1.213(a) is made in the application) or issuance of a patent. Furthermore, the record from an abandoned application may also be available to the public if the application is referenced in a published application or an issued patent (see 37 CFR 1.14). Checks and credit card authorization forms PTO-2038 submitted for payment purposes are not retained in the application file and therefore are not publicly available.

LEGAL NAME OF INVENTOR

Inventor: Deborah Adler Date (Optional): July 22, 2015

Signature: Deborah Adler

Note: An application data sheet (PTO/SB/14 or equivalent), including naming the entire inventive entity, must accompany this form or must have been previously filed. Use an additional PTO/AIA/01 form for each additional inventor.

This collection of information is required by 35 U.S.C. 115 and 37 CFR 1.63. The information is required to obtain or retain a benefit by the public which is to file (and by the USPTO to process) an application. Confidentiality is governed by 35 U.S.C. 122 and 37 CFR 1.11 and 1.14. This collection is estimated to take 1 minute to complete, including gathering, preparing, and submitting the completed application form to the USPTO. Time will vary depending upon the individual case. Any comments on the amount of time you require to complete this form and/or suggestions for reducing this burden, should be sent to the Chief Information Officer, U.S. Patent and Trademark Office, U.S. Department of Commerce, P.O. Box 1450, Alexandria, VA 22313-1450. DO NOT SEND FEES OR COMPLETED FORMS TO THIS ADDRESS. **SEND TO: Commissioner for Patents, P.O. Box 1450, Alexandria, VA 22313-1450.**

If you need assistance in completing the form, call 1-800-PTO-9199 and select option 2.

PTO/AIA/01 (06-12)
Approved for use through 01/31/2014. OMB 0651-0032
U.S. Patent and Trademark Office; U.S. DEPARTMENT OF COMMERCE
Under the Paperwork Reduction Act of 1995, no persons are required to respond to a collection of information unless it displays a valid OMB control number.

DECLARATION (37 CFR 1.63) FOR UTILITY OR DESIGN APPLICATION USING AN APPLICATION DATA SHEET (37 CFR 1.76)

Title of Invention: Catheter Tray, Packaging System, Instruction Insert, and Associated Methods

As the below named inventor, I hereby declare that:

This declaration is directed to:

☐ The attached application, or

☒ United States application or PCT international application number 13/860,902 filed on April 11, 2013.

The above-identified application was made or authorized to be made by me.

I believe that I am the original inventor or an original joint inventor of a claimed invention in the application.

I hereby acknowledge that any willful false statement made in this declaration is punishable under 18 U.S.C. 1001 by fine or imprisonment of not more than five (5) years, or both.

WARNING:

Petitioner/applicant is cautioned to avoid submitting personal information in documents filed in a patent application that may contribute to identity theft. Personal information such as social security numbers, bank account numbers, or credit card numbers (other than a check or credit card authorization form PTO-2038 submitted for payment purposes) is never required by the USPTO to support a petition or an application. If this type of personal information is included in documents submitted to the USPTO, petitioners/applicants should consider redacting such personal information from the documents before submitting them to the USPTO. Petitioner/applicant is advised that the record of a patent application is available to the public after publication of the application (unless a non-publication request in compliance with 37 CFR 1.213(a) is made in the application) or issuance of a patent. Furthermore, the record from an abandoned application may also be available to the public if the application is referenced in a published application or an issued patent (see 37 CFR 1.14). Checks and credit card authorization forms PTO-2038 submitted for payment purposes are not retained in the application file and therefore are not publicly available.

LEGAL NAME OF INVENTOR

Inventor: John Kutsch Date (Optional) 6/29/15

Signature: John Kutsch

Note: An application data sheet (PTO/SB/14 or equivalent), including naming the entire inventive entity, must accompany this form or must have been previously filed. Use an additional PTO/AIA/01 form for each additional inventor.

This collection of information is required by 35 U.S.C. 115 and 37 CFR 1.63. The information is required to obtain or retain a benefit by the public which is to file (and by the USPTO to process) an application. Confidentiality is governed by 35 U.S.C. 122 and 37 CFR 1.11 and 1.14. This collection is estimated to take 1 minute to complete, including gathering, preparing, and submitting the completed application form to the USPTO. Time will vary depending upon the individual case. Any comments on the amount of time you require to complete this form and/or suggestions for reducing this burden, should be sent to the Chief Information Officer, U.S. Patent and Trademark Office, U.S. Department of Commerce, P.O. Box 1450, Alexandria, VA 22313-1450. DO NOT SEND FEES OR COMPLETED FORMS TO THIS ADDRESS. **SEND TO: Commissioner for Patents, P.O. Box 1450, Alexandria, VA 22313-1450.**

If you need assistance in completing the form, call 1-800-PTO-9199 and select option 2.

PTO/AIA/01 (06-12)
Approved for use through 01/31/2014. OMB 0651-0032
U.S. Patent and Trademark Office; U.S. DEPARTMENT OF COMMERCE
Under the Paperwork Reduction Act of 1995, no persons are required to respond to a collection of information unless it displays a valid OMB control number.

DECLARATION (37 CFR 1.63) FOR UTILITY OR DESIGN APPLICATION USING AN APPLICATION DATA SHEET (37 CFR 1.76)

Title of Invention: Catheter Tray, Packaging System, Instruction Insert, and Associated Methods

As the below named inventor, I hereby declare that:

This declaration is directed to:

☐ The attached application, or

☒ United States application or PCT international application number 13/860,902 filed on April 11, 2013.

The above-identified application was made or authorized to be made by me.

I believe that I am the original inventor or an original joint inventor of a claimed invention in the application.

I hereby acknowledge that any willful false statement made in this declaration is punishable under 18 U.S.C. 1001 by fine or imprisonment of not more than five (5) years, or both.

WARNING:

Petitioner/applicant is cautioned to avoid submitting personal information in documents filed in a patent application that may contribute to identity theft. Personal information such as social security numbers, bank account numbers, or credit card numbers (other than a check or credit card authorization form PTO-2038 submitted for payment purposes) is never required by the USPTO to support a petition or an application. If this type of personal information is included in documents submitted to the USPTO, petitioners/applicants should consider redacting such personal information from the documents before submitting them to the USPTO. Petitioner/applicant is advised that the record of a patent application is available to the public after publication of the application (unless a non-publication request in compliance with 37 CFR 1.213(a) is made in the application) or issuance of a patent. Furthermore, the record from an abandoned application may also be available to the public if the application is referenced in a published application or an issued patent (see 37 CFR 1.14). Checks and credit card authorization forms PTO-2038 submitted for payment purposes are not retained in the application file and therefore are not publicly available.

LEGAL NAME OF INVENTOR

Inventor: Jack Maze Date (Optional): 6/24/15

Signature: Jack E Maze

Note: An application data sheet (PTO/SB/14 or equivalent), including naming the entire inventive entity, must accompany this form or must have been previously filed. Use an additional PTO/AIA/01 form for each additional inventor.

This collection of information is required by 35 U.S.C. 115 and 37 CFR 1.63. The information is required to obtain or retain a benefit by the public which is to file (and by the USPTO to process) an application. Confidentiality is governed by 35 U.S.C. 122 and 37 CFR 1.11 and 1.14. This collection is estimated to take 1 minute to complete, including gathering, preparing, and submitting the completed application form to the USPTO. Time will vary depending upon the individual case. Any comments on the amount of time you require to complete this form and/or suggestions for reducing this burden, should be sent to the Chief Information Officer, U.S. Patent and Trademark Office, U.S. Department of Commerce, P.O. Box 1450, Alexandria, VA 22313-1450. DO NOT SEND FEES OR COMPLETED FORMS TO THIS ADDRESS. **SEND TO: Commissioner for Patents, P.O. Box 1450, Alexandria, VA 22313-1450.**

If you need assistance in completing the form, call 1-800-PTO-9199 and select option 2.

PTO/AIA/01 (06-12)
Approved for use through 01/31/2014. OMB 0651-0032
U.S. Patent and Trademark Office; U.S. DEPARTMENT OF COMMERCE
Under the Paperwork Reduction Act of 1995, no persons are required to respond to a collection of information unless it displays a valid OMB control number.

DECLARATION (37 CFR 1.63) FOR UTILITY OR DESIGN APPLICATION USING AN APPLICATION DATA SHEET (37 CFR 1.76)

Title of Invention	Catheter Tray, Packaging System, Instruction Insert, and Associated Methods

As the below named inventor, I hereby declare that:

This declaration is directed to:

☐ The attached application, or

☒ United States application or PCT international application number 13/860,902 filed on April 11, 2013.

The above-identified application was made or authorized to be made by me.

I believe that I am the original inventor or an original joint inventor of a claimed invention in the application.

I hereby acknowledge that any willful false statement made in this declaration is punishable under 18 U.S.C. 1001 by fine or imprisonment of not more than five (5) years, or both.

WARNING:

Petitioner/applicant is cautioned to avoid submitting personal information in documents filed in a patent application that may contribute to identity theft. Personal information such as social security numbers, bank account numbers, or credit card numbers (other than a check or credit card authorization form PTO-2038 submitted for payment purposes) is never required by the USPTO to support a petition or an application. If this type of personal information is included in documents submitted to the USPTO, petitioners/applicants should consider redacting such personal information from the documents before submitting them to the USPTO. Petitioner/applicant is advised that the record of a patent application is available to the public after publication of the application (unless a non-publication request in compliance with 37 CFR 1.213(a) is made in the application) or issuance of a patent. Furthermore, the record from an abandoned application may also be available to the public if the application is referenced in a published application or an issued patent (see 37 CFR 1.14). Checks and credit card authorization forms PTO-2038 submitted for payment purposes are not retained in the application file and therefore are not publicly available.

LEGAL NAME OF INVENTOR

Inventor: Kenneth Chua Date (Optional): 7/16/15

Signature: Kenneth Chua

Note: An application data sheet (PTO/SB/14 or equivalent), including naming the entire inventive entity, must accompany this form or must have been previously filed. Use an additional PTO/AIA/01 form for each additional inventor.

This collection of information is required by 35 U.S.C. 115 and 37 CFR 1.63. The information is required to obtain or retain a benefit by the public which is to file (and by the USPTO to process) an application. Confidentiality is governed by 35 U.S.C. 122 and 37 CFR 1.11 and 1.14. This collection is estimated to take 1 minute to complete, including gathering, preparing, and submitting the completed application form to the USPTO. Time will vary depending upon the individual case. Any comments on the amount of time you require to complete this form and/or suggestions for reducing this burden, should be sent to the Chief Information Officer, U.S. Patent and Trademark Office, U.S. Department of Commerce, P.O. Box 1450, Alexandria, VA 22313-1450. DO NOT SEND FEES OR COMPLETED FORMS TO THIS ADDRESS. **SEND TO: Commissioner for Patents, P.O. Box 1450, Alexandria, VA 22313-1450.**

If you need assistance in completing the form, call 1-800-PTO-9199 and select option 2.

PTO/AIA/01 (06-12)
Approved for use through 01/31/2014. OMB 0651-0032
U.S. Patent and Trademark Office; U.S. DEPARTMENT OF COMMERCE
Under the Paperwork Reduction Act of 1995, no persons are required to respond to a collection of information unless it displays a valid OMB control number.

DECLARATION (37 CFR 1.63) FOR UTILITY OR DESIGN APPLICATION USING AN APPLICATION DATA SHEET (37 CFR 1.76)

Title of Invention: Catheter Tray, Packaging System, Instruction Insert, and Associated Methods

As the below named inventor, I hereby declare that:

This declaration is directed to:

☐ The attached application, or

☒ United States application or PCT international application number 13/860,902 filed on April 11, 2013.

The above-identified application was made or authorized to be made by me.

I believe that I am the original inventor or an original joint inventor of a claimed invention in the application.

I hereby acknowledge that any willful false statement made in this declaration is punishable under 18 U.S.C. 1001 by fine or imprisonment of not more than five (5) years, or both.

WARNING:

Petitioner/applicant is cautioned to avoid submitting personal information in documents filed in a patent application that may contribute to identity theft. Personal information such as social security numbers, bank account numbers, or credit card numbers (other than a check or credit card authorization form PTO-2038 submitted for payment purposes) is never required by the USPTO to support a petition or an application. If this type of personal information is included in documents submitted to the USPTO, petitioners/applicants should consider redacting such personal information from the documents before submitting them to the USPTO. Petitioner/applicant is advised that the record of a patent application is available to the public after publication of the application (unless a non-publication request in compliance with 37 CFR 1.213(a) is made in the application) or issuance of a patent. Furthermore, the record from an abandoned application may also be available to the public if the application is referenced in a published application or an issued patent (see 37 CFR 1.14). Checks and credit card authorization forms PTO-2038 submitted for payment purposes are not retained in the application file and therefore are not publicly available.

LEGAL NAME OF INVENTOR

Inventor: Alberto Savage Date (Optional): 07/19/15

Signature: [signature]

Note: An application data sheet (PTO/SB/14 or equivalent), including naming the entire inventive entity, must accompany this form or must have been previously filed. Use an additional PTO/AIA/01 form for each additional inventor.

This collection of information is required by 35 U.S.C. 115 and 37 CFR 1.63. The information is required to obtain or retain a benefit by the public which is to file (and by the USPTO to process) an application. Confidentiality is governed by 35 U.S.C. 122 and 37 CFR 1.11 and 1.14. This collection is estimated to take 1 minute to complete, including gathering, preparing, and submitting the completed application form to the USPTO. Time will vary depending upon the individual case. Any comments on the amount of time you require to complete this form and/or suggestions for reducing this burden, should be sent to the Chief Information Officer, U.S. Patent and Trademark Office, U.S. Department of Commerce, P.O. Box 1450, Alexandria, VA 22313-1450. DO NOT SEND FEES OR COMPLETED FORMS TO THIS ADDRESS. **SEND TO: Commissioner for Patents, P.O. Box 1450, Alexandria, VA 22313-1450.**

If you need assistance in completing the form, call 1-800-PTO-9199 and select option 2.

PTO/AIA/01 (06-12)
Approved for use through 01/31/2014. OMB 0651-0032
U.S. Patent and Trademark Office; U.S. DEPARTMENT OF COMMERCE
Under the Paperwork Reduction Act of 1995, no persons are required to respond to a collection of information unless it displays a valid OMB control number.

DECLARATION (37 CFR 1.63) FOR UTILITY OR DESIGN APPLICATION USING AN APPLICATION DATA SHEET (37 CFR 1.76)

Title of Invention	Catheter Tray, Packaging System, Instruction Insert, and Associated Methods

As the below named inventor, I hereby declare that:

This declaration is directed to:

☐ The attached application, or

☒ United States application or PCT international application number 13/860,902 filed on April 11, 2013.

The above-identified application was made or authorized to be made by me.

I believe that I am the original inventor or an original joint inventor of a claimed invention in the application.

I hereby acknowledge that any willful false statement made in this declaration is punishable under 18 U.S.C. 1001 by fine or imprisonment of not more than five (5) years, or both.

WARNING:

Petitioner/applicant is cautioned to avoid submitting personal information in documents filed in a patent application that may contribute to identity theft. Personal information such as social security numbers, bank account numbers, or credit card numbers (other than a check or credit card authorization form PTO-2038 submitted for payment purposes) is never required by the USPTO to support a petition or an application. If this type of personal information is included in documents submitted to the USPTO, petitioners/applicants should consider redacting such personal information from the documents before submitting them to the USPTO. Petitioner/applicant is advised that the record of a patent application is available to the public after publication of the application (unless a non-publication request in compliance with 37 CFR 1.213(a) is made in the application) or issuance of a patent. Furthermore, the record from an abandoned application may also be available to the public if the application is referenced in a published application or an issued patent (see 37 CFR 1.14). Checks and credit card authorization forms PTO-2038 submitted for payment purposes are not retained in the application file and therefore are not publicly available.

LEGAL NAME OF INVENTOR

Inventor: Earl Wilson Date (Optional) :

Signature: Earl W. Wilson

Note: An application data sheet (PTO/SB/14 or equivalent), including naming the entire inventive entity, must accompany this form or must have been previously filed. Use an additional PTO/AIA/01 form for each additional inventor.

This collection of information is required by 35 U.S.C. 115 and 37 CFR 1.63. The information is required to obtain or retain a benefit by the public which is to file (and by the USPTO to process) an application. Confidentiality is governed by 35 U.S.C. 122 and 37 CFR 1.11 and 1.14. This collection is estimated to take 1 minute to complete, including gathering, preparing, and submitting the completed application form to the USPTO. Time will vary depending upon the individual case. Any comments on the amount of time you require to complete this form and/or suggestions for reducing this burden, should be sent to the Chief Information Officer, U.S. Patent and Trademark Office, U.S. Department of Commerce, P.O. Box 1450, Alexandria, VA 22313-1450. DO NOT SEND FEES OR COMPLETED FORMS TO THIS ADDRESS. **SEND TO: Commissioner for Patents, P.O. Box 1450, Alexandria, VA 22313-1450.**

If you need assistance in completing the form, call 1-800-PTO-9199 and select option 2.

PTO/SB/08a (01-10)
Approved for use through 07/31/2012. OMB 0651-0031
U.S. Patent and Trademark Office; U.S. DEPARTMENT OF COMMERCE

Under the Paperwork Reduction Act of 1995, no persons are required to respond to a collection of information unless it contains a valid OMB control number.

INFORMATION DISCLOSURE STATEMENT BY APPLICANT (Not for submission under 37 CFR 1.99)		
	Application Number	16/944,667
	Filing Date	July 31, 2020
	First Named Inventor	Jennifer E. Tomes
	Art Unit	
	Examiner Name	
	Attorney Docket Number	10055U CIP2 D1 C1C1C1C1C1

U.S.PATENTS						
Examiner Initial*	Cite No	Patent Number	Kind Code[1]	Issue Date	Name of Patentee or Applicant of cited Document	Pages, Columns, Lines, Where Relevant Passages or Relevant Figures Appear
		2659485		1953-11-17	Duley et al.	
		2715296		1955-08-16	Petit, Frank	
		2781611		1957-02-19	West, Bill	
		2886316		1959- 05-12	Ayala, Carl	
		2947415		1960-08-02	Garth	
		2954642		1960-10-04	Roderick, Jackson	
		2959891		1960-11-15	Barnett, Harry et al.	
		3013656		1961-12-19	Murphy, Jr., William P	
		3107786		1963-10-22	Adelman	
		3133635		1964- 05-19	Morris, Gordon	
		3166189		1965-01-19	Disston	

Under the Paperwork Reduction Act of 1995, no persons are required to respond to a collection of information unless it contains a valid OMB control number.

INFORMATION DISCLOSURE STATEMENT BY APPLICANT (Not for submission under 37 CFR 1.99)		
	Application Number	16/944,667
	Filing Date	July 31, 2020
	First Named Inventor	Jennifer E. Tomes
	Art Unit	
	Examiner Name	
	Attorney Docket Number	10055U CIP2 D1 C1C1C1C1C1

		3315802		1967-04-25	Maro	
		3329261		1967-07-04	Serany, Jr., F. J., et al.	
		D209641		1967-12-19	Goldberg, D	
		3379339		1968-04-23	Asenbauer, Donald	
		3485352		1969-12-23	Pilger, N J.	
		D218077		1970-07-14	Gabriel, G.	
		3542019		1970-12-24	Gittins, Romona	
		3726281		1973-04-10	Norton	
		3770119		1973-11-06	Hultberg et al.	
		3851649		1974-12-03	Villari	
		D234404		1975-02-25	Merril, K.	
		3901235		1975-08-26	Patel et al.	

Under the Paperwork Reduction Act of 1995, no persons are required to respond to a collection of information unless it contains a valid OMB control number.

INFORMATION DISCLOSURE STATEMENT BY APPLICANT (Not for submission under 37 CFR 1.99)		
	Application Number	16/944,667
	Filing Date	July 31, 2020
	First Named Inventor	Jennifer E. Tomes
	Art Unit	
	Examiner Name	
	Attorney Docket Number	10055U CIP2 D1 C1C1C1C1C1

		D237315		1975-10-21	Nowkowski, E.	
		D237317		1975-10-21	Nowkowski, E.	
		3965900		1976-06-29	Boedecker, Steven	
		3967728		1976-07-06	Gordon et al.	
		3976195		1976-08-24	Cohen, Sheldon	
		3978983		1976-09-07	Brezetta, Michael W.	
		D242654		1976-12-07	Rawls, Norma J.	
		3998221		1976-12-21	Collins, Robert F.	
		4011944		1977-03-15	Cooley	
		D243798		1977-03-22	Swartz, Ronald E.	
		4075782		1978-02-28	Neuschatz, Joseph	
		D248871		1978-08-08	Forsman et al.	

Under the Paperwork Reduction Act of 1995, no persons are required to respond to a collection of information unless it contains a valid OMB control number.

INFORMATION DISCLOSURE STATEMENT BY APPLICANT (Not for submission under 37 CFR 1.99)		
	Application Number	16/944,667
	Filing Date	July 31, 2020
	First Named Inventor	Jennifer E. Tomes
	Art Unit	
	Examiner Name	
	Attorney Docket Number	10055U CIP2 D1 C1C1C1C1C1

		D249362		1978-09-12	Forsman et al.	
		4140127		1979-02-20	Ciani et al.	
		4160505		1979-07-10	Rauschenberger, Richard	
		4170300		1979-10-09	Pick, Ernest	
		4053280		1979-10-11	Salisbury, Thomas	
		4226328		1980-10-07	Beddow	
		4266669		1981- 05-12	Watson	
		4269310		1981- 05-26	Uson, Aurelio	
		4282678		1981-08-11	Tsui, Kwok	
		4307539		1981-12-29	Klein, Claus-Dieter	
		D262995		1982-02-09	Gaba et al.	
		4334537		1982-06-15	Peterson, James	

Under the Paperwork Reduction Act of 1995, no persons are required to respond to a collection of information unless it contains a valid OMB control number.

INFORMATION DISCLOSURE STATEMENT BY APPLICANT (Not for submission under 37 CFR 1.99)		
	Application Number	16/944,667
	Filing Date	July 31, 2020
	First Named Inventor	Jennifer E. Tomes
	Art Unit	
	Examiner Name	
	Attorney Docket Number	10055U CIP2 D1 C1C1C1C1C1

		D268130		1983-03-01	Easton, Harlan	
		4458705		1984-07-10	Cawood, Charles	
		D275886		1984-10-09	Sheward et al.	
		D276462		1984-11-20	Villarreal, Isamari	
		D277508		1985-02-05	Clair, Michael W.	
		4501363		1985-02-26	Isbey, Jr., Edward	
		4523679		1985-06-18	Paikoff et al.	
		4530349		1985-07-23	Metzger, Dorothy	
		D280663		1985-09-17	Albon et al.	
		D280933		1985-10-08	McLaughlin, John T.	
		D280993		1985-10-15	Mariol, James F.	
		D283051		1986-03-18	Fichera, Alfred J.	

PTO/SB/08a (01-10)
Approved for use through 07/31/2012. OMB 0651-0031
U.S. Patent and Trademark Office; U.S. DEPARTMENT OF COMMERCE

Under the Paperwork Reduction Act of 1995, no persons are required to respond to a collection of information unless it contains a valid OMB control number.

INFORMATION DISCLOSURE STATEMENT BY APPLICANT (Not for submission under 37 CFR 1.99)		
	Application Number	16/944,667
	Filing Date	July 31, 2020
	First Named Inventor	Jennifer E. Tomes
	Art Unit	
	Examiner Name	
	Attorney Docket Number	10055U CIP2 D1 C1C1C1C1C1

		D287760		1987-01-13	Discko, Jr., John J.	
		4761008		1988-08-02	Huggins, Peter D.	
		4767008		1988-08-30	Warnecke et al.	
		4795441		1989-01-03	Bhatt, Kunjlata	
		4811847		1989-03-14	Reif, Thomas H.	
		4828113		1989- 05-09	Friedland, Jeffrey	
		4844259		1989-07-04	Glowczewskie et al.	
		4858821		1989-08-22	Bickelhaupt, Roger	
		4991877		1991-02-12	Lieberman, Michael L.	
		5007535		1991-04-16	Meseke et al.	
		5024326		1991-06-18	Sandel et al.	
		5031768		1991-07-16	Fischer, Dan E.	

Under the Paperwork Reduction Act of 1995, no persons are required to respond to a collection of information unless it contains a valid OMB control number.

INFORMATION DISCLOSURE STATEMENT BY APPLICANT (Not for submission under 37 CFR 1.99)		
	Application Number	16/944,667
	Filing Date	July 31, 2020
	First Named Inventor	Jennifer E. Tomes
	Art Unit	
	Examiner Name	
	Attorney Docket Number	10055U CIP2 D1 C1C1C1C1C1

		5094621		1992-03-10	Friedel, Joan	
		5163557		1992-11-17	Sokolowski, Theresa	
		5170804		1992-12-15	Glassman	
		5197885		1993-03-30	Friedel, Joan	
		D334973		1993-04-20	Valentine et al.	
		D337830		1993-07-27	Coyne et al.	
		5232369		1993-08-03	Mavrikis, Anna M.	
		5242398		1993-09-07	Knoll, Charles et al.	
		5244394		1993-09-14	Serabian-Musto, Judy	
		D343687		1994-01-25	Houghton et al.	
		5312287		1994- 05-17	Chuang, Gary	
		5314339		1994- 05-24	Aponte, Marivel	

PTO/SB/08a (01-10)
Approved for use through 07/31/2012. OMB 0651-0031
U.S. Patent and Trademark Office; U.S. DEPARTMENT OF COMMERCE

Under the Paperwork Reduction Act of 1995, no persons are required to respond to a collection of information unless it contains a valid OMB control number.

INFORMATION DISCLOSURE STATEMENT BY APPLICANT (Not for submission under 37 CFR 1.99)		
	Application Number	16/944,667
	Filing Date	July 31, 2020
	First Named Inventor	Jennifer E. Tomes
	Art Unit	
	Examiner Name	
	Attorney Docket Number	10055U CIP2 D1 C1C1C1C1C1

		5318543		1994-06-07	Ross et al.	
		5324201		1994-06-28	Friedel, Joan	
		4925448		1990- 05-15	Bazaral, Michael G.	
		4928830		1990- 05-29	Brewer, Cecil C.	
		D623765		2010-09-14	Tomes et al.	
		D650912		2011-12-20	Tomes et al.	
		D704856		2014- 05-13	Tomes et al.	
		D832456		2018-10-30	Self, Brian	
		5339955		1994-08-23	Horan et al.	
		D351661		1994-10-18	Fischer, Dan E.	
		5392918		1995-02-28	Harrison	
		5411437		1995- 05-02	Weber et al.	

PTO/SB/08a (01-10)
Approved for use through 07/31/2012. OMB 0651-0031
U.S. Patent and Trademark Office; U.S. DEPARTMENT OF COMMERCE

Under the Paperwork Reduction Act of 1995, no persons are required to respond to a collection of information unless it contains a valid OMB control number.

INFORMATION DISCLOSURE STATEMENT BY APPLICANT (Not for submission under 37 CFR 1.99)		
	Application Number	16/944,667
	Filing Date	July 31, 2020
	First Named Inventor	Jennifer E. Tomes
	Art Unit	
	Examiner Name	
	Attorney Docket Number	10055U CIP2 D1 C1C1C1C1C1

		5487566		1996-01-30	Hedge, Jr., J. R.	
		5779053		1997-06-24	Partika	
		D380272		1997-06-24	Partika et al.	
		5665945		1997-09-09	Oshima, Mikio	
		D387177		1997-12-02	Davis, Mark S.	
		D387559		1997-12-16	Williamson, Edward	
		5713778		1998-02-03	Rodeosevich et al.	
		5720502		1998-02-24	Cain, John R.	
		5778574		1998-07-14	Reuben, Ronnie	
		5795213		1998-08-18	Goodwin, Richard P.	
		5810738		1998-09-22	Thomas II, Donald D.	
		5820441		1998-10-13	Pracas, Victor	

Under the Paperwork Reduction Act of 1995, no persons are required to respond to a collection of information unless it contains a valid OMB control number.

INFORMATION DISCLOSURE STATEMENT BY APPLICANT (Not for submission under 37 CFR 1.99)		
	Application Number	16/944,667
	Filing Date	July 31, 2020
	First Named Inventor	Jennifer E. Tomes
	Art Unit	
	Examiner Name	
	Attorney Docket Number	10055U CIP2 D1 C1C1C1C1C1

		5827262		1998-10-27	Neftel et al.	
		5829790		1998-11-03	Phillips, Richard L.	
		5872262		1999-02-16	Dolle III et al.	
		5931303		1999-08-03	Salvadori, Lawrence	
		5941241		1999-08-24	Weinstein et al.	
		5947284		1999-09-07	Foster, Brian W.	
		5954369		1999-09-21	Seabrook, March E.	
		5975295		1999-11-02	Diamond, Richard B.	
		6004136		1999-12-21	Ehrenpreis, Barbara	
		6012586		2000-01-11	Misra, Vijay K.	
		6068121		2000- 05-30	McGlinch, Timothy M.	
		6089943		2000-07-18	Lo, Wai	

Under the Paperwork Reduction Act of 1995, no persons are required to respond to a collection of information unless it contains a valid OMB control number.

INFORMATION DISCLOSURE STATEMENT BY APPLICANT (Not for submission under 37 CFR 1.99)		
	Application Number	16/944,667
	Filing Date	July 31, 2020
	First Named Inventor	Jennifer E. Tomes
	Art Unit	
	Examiner Name	
	Attorney Docket Number	10055U CIP2 D1 C1C1C1C1C1

		6142152		2000-11-07	Gawarecki, Herbert	
		6158437		2000-12-12	Vagley, Richard	
		6159017		2000-12-12	Coomansingh, Belden	
		D442697		2001- 05-22	Hajianpour, Mohammed A.	
		D450130		2001-11-06	Goldstein, Lee M.	
		D450391		2001-11-13	Hunt et al.	
		6330427		2001-12-11	Tabachnik, Joel B.	
		6361396		2002-03-26	Snyder et al.	
		6382212		2002- 05-07	Borchard, Craig F.	
		6405863		2002-06-18	Dhindsa	
		6454097		2002-09-24	Blanco, Juan Carlos Aceves	
		20030038475		2003-02-27	Stancil, Michelle	

PTO/SB/08a (01-10)
Approved for use through 07/31/2012. OMB 0651-0031
U.S. Patent and Trademark Office; U.S. DEPARTMENT OF COMMERCE

Under the Paperwork Reduction Act of 1995, no persons are required to respond to a collection of information unless it contains a valid OMB control number.

INFORMATION DISCLOSURE STATEMENT BY APPLICANT (Not for submission under 37 CFR 1.99)		
	Application Number	16/944,667
	Filing Date	July 31, 2020
	First Named Inventor	Jennifer E. Tomes
	Art Unit	
	Examiner Name	
	Attorney Docket Number	10055U CIP2 D1 C1C1C1C1C1

		6579271		2003-06-17	Aruffo et al.	
		6659506		2003-12-09	Erisalu, Enn	
		6681933		2004-01-11	Demsien et al.	
		6769546		2004-08-03	Busch	
		D495491		2004-09-07	Ramirez, Richard	
		6793078		2004-09-21	Roshdy, Constance E.	
		6840379		2005-01-11	Franks-Farah et al.	
		6896141		2005- 05-24	McMichael et al.	
		6915901		2005-07-12	Feinberg	
		6926708		2005-08-09	Franks-Farah et al.	
		6948742		2005-09-27	Buck	
		7048120		2006- 05-23	Pond, Gary J.	

Under the Paperwork Reduction Act of 1995, no persons are required to respond to a collection of information unless it contains a valid OMB control number.

INFORMATION DISCLOSURE STATEMENT BY APPLICANT (Not for submission under 37 CFR 1.99)		
	Application Number	16/944,667
	Filing Date	July 31, 2020
	First Named Inventor	Jennifer E. Tomes
	Art Unit	
	Examiner Name	
	Attorney Docket Number	10055U CIP2 D1 C1C1C1C1C1

		7066328		2006-06-27	Janice Pulsifer	
		D530920		2006-10-31	Snell, Russell	
		D547064		2007-07-24	Snell, Russell	
		D549454		2007-08-28	.ANG.hman, Daniel	
		7264869		2007-09-04	Tobita	
		7278987		2007-10-09	Solazzo, Anthony	
		D557047		2007-12-11	Dretzka, Philip	
		D561473		2008-02-12	Phillips et al.	
		D563673		2008-03-11	Dretzka, Philip	
		7401703		2008-07-22	McMichael, Donald J.	
		7434687		2008-10-14	Itou et al.	
		D579662		2008-11-04	Dretzka, Philip	

Under the Paperwork Reduction Act of 1995, no persons are required to respond to a collection of information unless it contains a valid OMB control number.

INFORMATION DISCLOSURE STATEMENT BY APPLICANT (Not for submission under 37 CFR 1.99)		
	Application Number	16/944,667
	Filing Date	July 31, 2020
	First Named Inventor	Jennifer E. Tomes
	Art Unit	
	Examiner Name	
	Attorney Docket Number	10055U CIP2 D1 C1C1C1C1C1

		D590596		2009-04-21	Dretzka, Philip	
		D596311		2009-07-14	Antons, Peter	
		7624869		2009-12-01	Primer, Jonathan S.	
		D609819		2010-02-09	Tomes et al.	
		D609819 S		2010-02-09	Tomes, Jennifer E., et al.	
		D612153		2010-03-23	Liao, Ying-Chieh	
		7785312		2010-08-31	Thorne	
		7789873		2010-09-07	Kubalak, Thomas	
		D636894		2011-04-26	Tomes et al.	
		D638137		2011- 05-17	Gross et al.	
		D662218		2012-06-19	Pittman, William	
		8448786		2013- 05-28	Tomes et al.	

Under the Paperwork Reduction Act of 1995, no persons are required to respond to a collection of information unless it contains a valid OMB control number.

INFORMATION DISCLOSURE STATEMENT BY APPLICANT (Not for submission under 37 CFR 1.99)		
	Application Number	16/944,667
	Filing Date	July 31, 2020
	First Named Inventor	Jennifer E. Tomes
	Art Unit	
	Examiner Name	
	Attorney Docket Number	10055U CIP2 D1 C1C1C1C1C1

		D688461		2013-08-27	Ambrefe et al.	
		8628549		2014-01-14	To et al.	
		8631935		2014-01-21	Tomes et al.	
		8678190		2014-03-25	Tomes et al.	
		8708999		2014-04-29	Hong et al.	
		D708347		2014-07-01	Lober, Stephen	
		D708759		2014-07-08	Heyman et al.	
		D720470		2014-12-30	Lober, Stephen	
		D720471		2014-12-30	Angel et al.	
		9084593		2015-07-21	Yakel et al.	
		D742028		2015-10-27	Hutchison, Jonathan	
		9283352		2016-03-15	Tomes et al.	

Under the Paperwork Reduction Act of 1995, no persons are required to respond to a collection of information unless it contains a valid OMB control number.

INFORMATION DISCLOSURE STATEMENT BY APPLICANT (Not for submission under 37 CFR 1.99)		
	Application Number	16/944,667
	Filing Date	July 31, 2020
	First Named Inventor	Jennifer E. Tomes
	Art Unit	
	Examiner Name	
	Attorney Docket Number	10055U CIP2 D1 C1C1C1C1C1

		D310896		2016-09-25	Winjum, Jack	
		9522753		2016-12-20	Tomes et al.	
		D779082		2017-02-14	Andre et al.	
		D800337		2017-10-17	Daines, Eric	
		9795761		2017-10-24	Lockwood et al.	
		9808400		2017-11-07	Tomes et al.	
		10251812		2019-04-09	Tomes et al.	
U.S.PATENT APPLICATION PUBLICATIONS						
Examiner Initial*	Cite No	Publication Number	Kind Code[1]	Publication Date	Name of Patentee or Applicant of cited Document	Pages, Columns, Lines, Where Relevant Passages or Relevant Figures Appear
		2002/0185406		2002-12-12	Massengale, Roger	
		2003/0031995		2003-02-13	Laura, Abbey	
		2003/0038475		2003-02-27	Stancil, Michelle	
		2003/0075474		2003-04-24	Moyer et al.	

PTO/SB/08a (01-10)
Approved for use through 07/31/2012. OMB 0651-0031
U.S. Patent and Trademark Office; U.S. DEPARTMENT OF COMMERCE

Under the Paperwork Reduction Act of 1995, no persons are required to respond to a collection of information unless it contains a valid OMB control number.

INFORMATION DISCLOSURE STATEMENT BY APPLICANT (Not for submission under 37 CFR 1.99)		
	Application Number	16/944,667
	Filing Date	July 31, 2020
	First Named Inventor	Jennifer E. Tomes
	Art Unit	
	Examiner Name	
	Attorney Docket Number	10055U CIP2 D1 C1C1C1C1C1

		2003/0159966		2003-08-28	McMichael et al.	
		2003/0159969		2003-08-28	McMichael et al.	
		2004/0004019		2004-01-08	Busch, L. J.	
		2004/0055919		2004-03-25	Rowe et al.	
		2004/0161732		2004-08-19	Stump, Ronda	
		2004/0180822		2004-09-16	Grafton, Donald	
		2004/0195145		2004-10-07	Roshdy, Constance E.	
		2004/0238391		2004-12-02	Pond, Gary	
		2005/0022822		2005-02-03	Santilli, Albert	
		2005/0101905		2005- 05-12	Merry, Alan	
		2005/0228691		2005-10-13	Paparo, Michael	
		2005024 1986		2005-11-03	Massengale et al.	
		2005/0256453		2005-11-17	Nagamatsu, Ryuji	

PTO/SB/08a (01-10)
Approved for use through 07/31/2012. OMB 0651-0031
U.S. Patent and Trademark Office; U.S. DEPARTMENT OF COMMERCE

Under the Paperwork Reduction Act of 1995, no persons are required to respond to a collection of information unless it contains a valid OMB control number.

INFORMATION DISCLOSURE STATEMENT BY APPLICANT (Not for submission under 37 CFR 1.99)		
	Application Number	16/944,667
	Filing Date	July 31, 2020
	First Named Inventor	Jennifer E. Tomes
	Art Unit	
	Examiner Name	
	Attorney Docket Number	10055U CIP2 D1 C1C1C1C1C1

		2005/0285385		2005-12-29	Bova	
		2006/0009742		2006-01-12	Solazzo, Anthony	
		2006/0096877		2006- 05-11	Khajavi et al.	
		2006/0011501		2006-01-19	Itou, Yasushi	
		2006/0029912		2006-02-09	Kearby, Gerald et al.	
		2006/0088355		2006-04-27	Ribi, Hans	
		2006/0186010		2006-08-24	Warnack	
		2006/0264822		2006-11-23	Nagamatsu, Ryuji	
		2006/264822		2006-11-23	Nagamatsu, Ryuji	
		2006/0271019		2006-11-30	Stoller	
		2007/0026472		2007-02-01	Prokash et al.	
		2007/0060908		2007-03-15	Webster et al.	
		2007/0065792		2007-03-22	Schubarth, Wanda	

PTO/SB/08a (01-10)
Approved for use through 07/31/2012. OMB 0651-0031
U.S. Patent and Trademark Office; U.S. DEPARTMENT OF COMMERCE

Under the Paperwork Reduction Act of 1995, no persons are required to respond to a collection of information unless it contains a valid OMB control number.

INFORMATION DISCLOSURE STATEMENT BY APPLICANT (Not for submission under 37 CFR 1.99)		
	Application Number	16/944,667
	Filing Date	July 31, 2020
	First Named Inventor	Jennifer E. Tomes
	Art Unit	
	Examiner Name	
	Attorney Docket Number	10055U CIP2 D1 C1C1C1C1C1

		2007/008 4742		2007-04-19	Miller, Larry J., et al.	
		2007/008 8330		2007-04-19	House, Jamie	
		2007/009 5699		2007- 05-03	Frieze, Allan	
		2007/014 2786		2007-06-21	Lampropoulos, Fred	
		2007/016 1971		2007-07-12	House, Jamie	
		2007/020 3464		2007-08-30	Green et al.	
		2007/022 5687		2007-09-27	House, Jamie G.	
		2007/029 9431		2007-12-27	Jakubowski et al.	
		2008/011 6106		2008- 05-22	Lampropoulos et al.	
		2008/121 553		2008- 05-29	Gobel, Fred	
		2008028 3433		2008-11-20	Primer, Jonathan	
		2008/022 1515		2008-09-11	Nagamatsu, Ryuji	
		2008/024 9476		2008-10-09	Bierman et al.	

PTO/SB/08a (01-10)
Approved for use through 07/31/2012. OMB 0651-0031
U.S. Patent and Trademark Office; U.S. DEPARTMENT OF COMMERCE

Under the Paperwork Reduction Act of 1995, no persons are required to respond to a collection of information unless it contains a valid OMB control number.

INFORMATION DISCLOSURE STATEMENT BY APPLICANT (Not for submission under 37 CFR 1.99)		
	Application Number	16/944,667
	Filing Date	July 31, 2020
	First Named Inventor	Jennifer E. Tomes
	Art Unit	
	Examiner Name	
	Attorney Docket Number	10055U CIP2 D1 C1C1C1C1C1

		2008028 1254		2008-11-13	Humayun et al.	
		2008/028 3426		2008-11-20	Primer et al.	
		2009000 4055		2009-01-01	Darrigrand et al.	
		2009/007 1854		2009-03-19	Martin, William Wesley	
		2009/015 2160		2009-06-18	Thompson et al.	
		2009/018 4026		2009-07-23	Massengale et al.	
		2009/019 4453		2009-08-06	Thorne et al.	
		2009/023 4346		2009-09-17	McBride et al.	
		2009/023 6259		2009-09-24	Hicks, Lois A.	
		2009/031 8783		2009-12-24	Rohde, Bemina et al.	
		2010/027 4205		2010-10-28	Morelli et al.	
		2010/030 7942		2010-12-09	Tomes et al.	
		2010/031 1026		2010-12-09	Tomes et al.	

PTO/SB/08a (01-10)
Approved for use through 07/31/2012. OMB 0651-0031
U.S. Patent and Trademark Office; U.S. DEPARTMENT OF COMMERCE

Under the Paperwork Reduction Act of 1995, no persons are required to respond to a collection of information unless it contains a valid OMB control number.

INFORMATION DISCLOSURE STATEMENT BY APPLICANT (Not for submission under 37 CFR 1.99)		
	Application Number	16/944,667
	Filing Date	July 31, 2020
	First Named Inventor	Jennifer E. Tomes
	Art Unit	
	Examiner Name	
	Attorney Docket Number	10055U CIP2 D1 C1C1C1C1C1

		2011/0107494		2011- 05-12	Haines, Kimberly	
		2011/0155599		2011-06-30	Yakel et al.	
		2011/0232234		2011-09-29	Lockwood et al.	
		2011/0284410		2011-11-24	Lockwood, Robert	
		2011/0297147		2011-12-08	Lick et al.	
		2012/0145589		2012-06-14	Macinnes et al.	
		2014/0110296		2014-04-24	Terzibashian, Hagop S.	
		20100311026		2010-12-09	Tomes et al.	
		20110233079		2011-09-29	Macinnes et al.	
		20110290260		2011-12-01	Tomes et al.	
		20110290262		2011-12-01	Tomes et al.	
		20090099531		2009-04-16	Griesbach, III, Henry L.	
		20100307941		2010-12-09	Tomes et al.	

Under the Paperwork Reduction Act of 1995, no persons are required to respond to a collection of information unless it contains a valid OMB control number.

INFORMATION DISCLOSURE STATEMENT BY APPLICANT (Not for submission under 37 CFR 1.99)		
	Application Number	16/944,667
	Filing Date	July 31, 2020
	First Named Inventor	Jennifer E. Tomes
	Art Unit	
	Examiner Name	
	Attorney Docket Number	10055U CIP2 D1 C1C1C1C1C1

		20120145589		2012-06-14	Macinnes et al.			
FOREIGN PATENT DOCUMENTS								
Examiner Initial*	Cite No	Foreign Document Number[3]	Country Code[2]	Kind Code[4]	Publication Date	Name of Patentee or Applicant of cited Document	Pages,Columns,Lines where Relevant Passages or Relevant Figures Appear	T[5]
		6012586	CA		2000-01-11	Vijay, Misra		
		2005/027767	WO		2005-03-31	Dillon et al.		
		2006/114466	WO		2006-11-02	Aurelio		
		2007/045943	EP		2007-04-26	Tecnosanimed S R L		
		2007/045943	WO		2007-04-26	Tecnosanimed S R L et al.		
		2007-229520	JP		2007-09-13	Imai		
		201823147	CN		2011-05-11			
NON-PATENT LITERATURE DOCUMENTS								
Examiner Initials*	Cite No	Include name of the author (in CAPITAL LETTERS), title of the article (when appropriate), title of the item (book, magazine, journal, serial, symposium, catalog, etc.), date, page(s), volume-issue number(s), publisher, city and/or country where published.						T[5]
		Medline Industries Inc. vs C.R Bard. Inc., Exhibit G to Declaration of Dylan J. Raife in Support of Bard Opening Claim Construction Brief; Civil Action No 1:16-cv-03529; Judge Sharon Johnson Coleman; Filed November 11,2016.,						

Under the Paperwork Reduction Act of 1995, no persons are required to respond to a collection of information unless it contains a valid OMB control number.

INFORMATION DISCLOSURE STATEMENT BY APPLICANT (Not for submission under 37 CFR 1.99)		
	Application Number	16/944,667
	Filing Date	July 31, 2020
	First Named Inventor	Jennifer E. Tomes
	Art Unit	
	Examiner Name	
	Attorney Docket Number	10055U CIP2 D1 C1C1C1C1C1

		Chinese Application No: 201280035240.4; Filed May 24, 2012; Attorney Docket No. NP131057 (BPMDL0005JT.P6.CN 10055U CIP6 CN); Mailed August 18, 2015,	
		Dictionary definition m-w. URL:<http://ww.merriam-webster.com/dictionary/reassure>. Retrieved from Internet 10 Dec. 2013.,	
		Dictionary definition m-w. URL:<http://www.merriam-webster.com/dictionary/brave>. Retrieved fro Internet 10 Dec. 2013.,	
		Dover Intermittent Catheter Tray - 14 fr, Red Rubber; Website http://tinyurl.com/o4esrwh; Unknown Publication Date,	
		Inter Partes Review - Patent Owner's Prelim. Response; Patent 9,795,761; Inter Partes Review No. IPR2019-00109; Filed February 22, 2019.,	
		Inter Partes Review - Patent Owner's Prelim. Response; Patent 9,808,400; Inter Partes Review No. IPR2019-00208; Filed March 7, 2019.,	
		IPR Petition 2001, Declaration of Meyst dated January 11, 2019; IPR 2019-00035, IPR-2019-00036,	
		IPR Petition 2002, Declaration of Weintraub dated January 11, 2019; IPR 2019-00035, IPR-2019-00036,	

PTO/SB/08a (01-10)
Approved for use through 07/31/2012. OMB 0651-0031
U.S. Patent and Trademark Office; U.S. DEPARTMENT OF COMMERCE

Under the Paperwork Reduction Act of 1995, no persons are required to respond to a collection of information unless it contains a valid OMB control number.

INFORMATION DISCLOSURE STATEMENT BY APPLICANT (Not for submission under 37 CFR 1.99)		
	Application Number	16/944,667
	Filing Date	July 31, 2020
	First Named Inventor	Jennifer E. Tomes
	Art Unit	
	Examiner Name	
	Attorney Docket Number	10055U CIP2 D1 C1C1C1C1C1

		IPR Petition Exhibit 2001, Declaration of Meyst dated February 22, 2019; IPR2019-00109,	
		IPR Petition Exhibit 2001, Declaration of Meyst dated March 7, 2019; IPR2019-00208,	
		IPR Petition Exhibit 2001; Declaration of Meyst dated March 7, 2019; IPR2019-00223,	
		IPR Petition Exhibit 2002, Declaration of Weintraub dated March 7, 2019; IPR2019-00208,	
		IPR Petition Exhibit 2002, Declaration of Weintraub dated March 7, 2019; IPR2019-00223,	
		Lion King Sticker website. URL: <http://tlkobession.wuffpaws.org/OldSite/games/games2.html>. 1996 Retrieved from Internet 10 Dec. 2013.,	
		Lion Sticker Activity Book website. URL: <http://www.amazon.com/Disneys-Simbas-Pride-Sticker-Activity/dp/B0018DOJZA>. 1998 Retrieved from Internet 10 Dec. 2013.,	
		Medline Industries Inc. vs C.R Bard, Inc., Exhibit 1 to Declaration of Karl L. Leinsing in Support of Bard's Rebuttal on Claim Construction; Civil Action No. 1:16-cv-03529; Judge Sharon Johnson Coleman; Filed January 12.2018.,	

Under the Paperwork Reduction Act of 1995, no persons are required to respond to a collection of information unless it contains a valid OMB control number.

INFORMATION DISCLOSURE STATEMENT BY APPLICANT (Not for submission under 37 CFR 1.99)		
	Application Number	16/944,667
	Filing Date	July 31, 2020
	First Named Inventor	Jennifer E. Tomes
	Art Unit	
	Examiner Name	
	Attorney Docket Number	10055U CIP2 D1 C1C1C1C1C1

		Medline Industries Inc. vs C.R Bard, Inc.. Exhibit A lo Declaration of Brian Eutermoser in Support of Medline Response to Bard Opening Claim Construction; Civil Action No. 1:16-cv-03529; Judge Sharon Johnson Coleman; Filed December 9, 2016.,	
		Medline Industries Inc. vs C.R Bard, Inc.. Exhibit A to Declaration of Dylan J Raife in Support of Bard's Reply Claim Construction Bnef; Civil Action No. t:14-cv-03618: Judge John Z. Lee; Filed August 15. 2016,	
		Medline Industries Inc. vs C.R Bard, Inc: Exhibit F to C.R. Bard's LPR 2.3 Contentions; Civil Action No. 1.17-cv-7216; Judge Sara L. Ellis; Filed January 16.2018.,	
		Medline Industries Inc. vs C.R Bard. Inc., Exhibit 4 to Declaration of Richard Meyst re Claim Construction; Civil Action No. 1:16-cv-03529: Judge Sharon Johnson Coleman; Filed December 9.2016.,	
		Medline Industries Inc. vs C.R Bard. Inc., Exhibit C to Declaration of Nicole Smith in Support of Bard Reply to Claim Construction Brief; Civil Action No. 1.16-cv-03529; Judge Sharon Johnson Coleman. Filed January 12. 2018.,	
		Medline Industries Inc. vs C.R Bard. Inc.. Exhibit 3 to Declaration of Richard Meyst re Claim Construction; Civil Action No. 1:16-cv-03529: Judge Sharon Johnson Coleman. Filed December 9,2016.,	
		Medline Industries Inc. vs C.R Bard. Inc.; Exhibit C to Declaration of Nicole Smith in Support of Bard Reply to Medline Claim Construction Brief; Civil Action No. 116-cv-03529; Judge Sharon Johnson Coleman; Filed January 27,2017,	
		Medline Industries Inc. vs C.R Bard. Inc.; Exhibit F to Declaration of Brian Eutermoser in Support of Medline Response to Bard Opening Claim Construction; Civil Action No. 1:16-cv-03529; Judge Sharon Johnson Coleman: Filed December 9, 2016.,	

PTO/SB/08a (01-10)
Approved for use through 07/31/2012. OMB 0651-0031
U.S. Patent and Trademark Office; U.S. DEPARTMENT OF COMMERCE

Under the Paperwork Reduction Act of 1995, no persons are required to respond to a collection of information unless it contains a valid OMB control number.

INFORMATION DISCLOSURE STATEMENT BY APPLICANT (Not for submission under 37 CFR 1.99)		
	Application Number	16/944,667
	Filing Date	July 31, 2020
	First Named Inventor	Jennifer E. Tomes
	Art Unit	
	Examiner Name	
	Attorney Docket Number	10055U CIP2 D1 C1C1C1C1C1

		Medline Industries Inc. vs C.R. Bard, Inc.; Exhibit E to Declaration of Nicole Smith in Support of Bard Reply lo Claim Construction Brief; Civil Action No. 1.16-cv-03529. Judge Sharon Johnson Coleman. Filed January 12.2018.,	
		Medline Industries Inc. vs C.R. Bard, Inc; Exhibit A (List of Invalidating Prior Art) to C R. Bard's LPR 2 3 Contentions; Civil Action No. t:17-cv-7216; Judge Sara L. Ellis; Filed January 16.2018.,	
		Medline Industries inc. vs C R. Bard, Inc; Exhibit E to Declaration of Dylan Raife in Support of Motion for Leave to Add Counterclaims; Civil Action No. 1:17-cv-7216; Judge Sara L. Ellis; Filed February 27.2018.,	
		Medline industnes Inc, vs C.R Bard, Inc.; Exhibit A to Declaration of Nicole M. Smith; Civil Action No. 1:14-cv-03618; Judge John 2. Lee: Filed June 4, 2016.,	
		Medline industnes Inc. vs C R. Bard, Inc; C.R Bard's LPR 2 3 Contentions; Civil Action No. 1:17-cv-7216, Judge Sara L. Ellis; Filed January 16,2018.,	
		Medline Industnes Inc. vs C R. Bard, Inc; Declaration oi Nicole M Smith in Support of Bard Opening Claim Construction Brief; Civil Action No. 1:14-cv-03618: Judge John 2. Lee; Filed June 4,2016.,	
		Medline industnes Inc. vs C R. Bard, Inc; Exhibit B to Declaration of Dylan Raife in Support of Motion for Leave to Add Counterclaims; Civil Action No. 1:17-cv7216; Judge Sara L. Ellis; Filed February 27,2018.,	
		Medline Industnes inc. vs C R. Bard, Inc; Exhibit D to Declaration of Dylan Raife in Support of Motion for Leave to Add Counterclaims; Civil Action No. 1:17-cv-7216; Judge Sara L. Ellis: Filed February 27.2018.,	

PTO/SB/08a (01-10)
Approved for use through 07/31/2012. OMB 0651-0031
U.S. Patent and Trademark Office; U.S. DEPARTMENT OF COMMERCE

Under the Paperwork Reduction Act of 1995, no persons are required to respond to a collection of information unless it contains a valid OMB control number.

INFORMATION DISCLOSURE STATEMENT BY APPLICANT (Not for submission under 37 CFR 1.99)		
	Application Number	16/944,667
	Filing Date	July 31, 2020
	First Named Inventor	Jennifer E. Tomes
	Art Unit	
	Examiner Name	
	Attorney Docket Number	10055U CIP2 D1 C1C1C1C1C1

		Medline Industnes Inc. vs C.R Bard, Inc.; Exhibit G to Declaration of Nicole M. Smith; Civil Action No 1:14-cv-03618; Judge John 2, Lee; Filed June 4, 2016.,	
		Medline Industnes Inc. vs C.R Bard, Inc.; Exhibit H to Declaration of Nicole M. Smith; Civil Action No. 1:14-cv-03618; Judge John 2. Lee; Filed June 4, 2016.,	
		Medline Industnes Inc. vs C R. Bard, Inc; Exhibit A- C R. Bards Second Amended Answer to Second Amended Complaint: Civil Action No. 1:!7-cv-7216; Judge Sara L Ellis; Filed February 27,2018.,	
		Medline Industries Inc. vs C.R Bard, Inc., Declaration of Barbara Weintraub re Claim Construction; Civil Action No. 1:16-cv-03529; Judge Sharon Johnson Coleman; Filed December 22.2017.,	
		Medline industries Inc. vs C.R Bard, Inc., Declaration of Dylan J Raife in Support of Bard Opening Claim Construction Brief; Civil Action No. 1:16-cv-03529; Judge Sharon Johnson Coleman; Filed November 17, 2017.,	
		Medline Industries Inc. vs C.R Bard, Inc., Declaration of Nicole Smith in Support of Bard Reply to Medline Claim Construction Brief; Civil Action No. 1:16-cv-03529; Judge Sharon Johnson Coleman; Filed January 27,2017.,	
		Medline Industries Inc. vs C.R Bard, Inc., Exhibit 1 to Declaration of Richard Meyst re Claim Construction; Civil Action No. 1:16-cv-03529; Judge Sharon Johnson Coleman; Filed December 9.2016.,	
		Medline Industries Inc. vs C.R Bard, Inc., Exhibit 2 lo Declaration of Richard Meyst re Claim Construction; Civil Action No. 1:16-cv-03529; Judge Sharon Johnson Coleman; Filed December 9,2016.,	

PTO/SB/08a (01-10)
Approved for use through 07/31/2012. OMB 0651-0031
U.S. Patent and Trademark Office; U.S. DEPARTMENT OF COMMERCE

Under the Paperwork Reduction Act of 1995, no persons are required to respond to a collection of information unless it contains a valid OMB control number.

INFORMATION DISCLOSURE STATEMENT BY APPLICANT (Not for submission under 37 CFR 1.99)		
	Application Number	16/944,667
	Filing Date	July 31, 2020
	First Named Inventor	Jennifer E. Tomes
	Art Unit	
	Examiner Name	
	Attorney Docket Number	10055U CIP2 D1 C1C1C1C1C1

		Medline Industries Inc. vs C.R Bard, Inc., Exhibit 7 to Declaration of Richard Meyst Regarding Claim Construction: Civil Action No. 1:14-cv-03618; Judge John Z. Lee; Filed July 8.2016.,	
		Medline Industries Inc. vs C.R Bard, Inc., Exhibit A to Declaration of Dylan J Raife in Support of Bard Opening Claim Construction Brief; Civil Action No. 1;16-cv-03529; Judge Sharon Johnson Coleman; Filed November 11,2016.,	
		Medline Industries Inc. vs C.R Bard, Inc., Exhibit A to Declaration of Kevin A. Lake. Civil Action No. 1:14-cv-03618; Judge John Z. Lee; Filed July 8,2016.,	
		Medline Industries Inc. vs C.R Bard, Inc., Exhibit B to Declaration of Brian Eutermoser in Support of Medline Response to Bard Opening Claim Construction; Civil Action No. 1:16-cv-03529: Judge Sharon Johnson Coleman: Filed December 9,2016.,	
		Medline industries Inc. vs C.R Bard, inc., Exhibit F to Declaration of Dyian J. Raife in Support of Bard Opening Claim Construction Brief, Civil Action No. 1:16-cv-03529; Judge Sharon Johnson Coleman; Filed November 11, 2016.,	
		Medline Industries Inc. vs C.R Bard, Inc., Exhibit F to Declaration of Nicole Smith in Support of Bard Reply to Medline Claim Construction Brief; Civil Action No. 1:16-cv-03529; Judge Sharon Johnson Coleman; Filed January 27,2017.,	
		Medline Industries Inc. vs C.R Bard, Inc., Exhibit H to Declaration of Kevin A. Lake; Civil Action No. 1:14-cv-03618: Judge John Z. Lee; Filed July 8,2016.,	
		Medline Industries Inc. vs C.R Bard, Inc.. Bard Opening Claim Construction Bnef; Civil Action No 1" 16-cv-03529; Judge Sharon Johnson Coleman; Filed November 11.2016.,	

PTO/SB/08a (01-10)
Approved for use through 07/31/2012. OMB 0651-0031
U.S. Patent and Trademark Office; U.S. DEPARTMENT OF COMMERCE

Under the Paperwork Reduction Act of 1995, no persons are required to respond to a collection of information unless it contains a valid OMB control number.

INFORMATION DISCLOSURE STATEMENT BY APPLICANT (Not for submission under 37 CFR 1.99)		
	Application Number	16/944,667
	Filing Date	July 31, 2020
	First Named Inventor	Jennifer E. Tomes
	Art Unit	
	Examiner Name	
	Attorney Docket Number	10055U CIP2 D1 C1C1C1C1C1

		Medline Industries Inc. vs C.R Bard, Inc.. Declaration of Dylan J Raife in Support of Bard's Reply Claim Construction Brief: Civil Action No. I:14-cv-03518; Judge John 2. Lee; Fiied August 15.2016.,	
		Medline Industries Inc. vs C.R Bard, Inc.. Exhibit 1 to Declaration of Dylan J. Raife in Support of Bard Opening Claim Construction Brief; Civil Action No. 1:16-cv-03529; Judge Sharon Johnson Coleman; Filed November 11,2016.,	
		Medline Industries Inc. vs C.R Bard, Inc.. Exhibit 10 to Declaration of Richard Meyst Regarding Claim Construction: Civil Action No. 1:14-cv-03618; Judge John Z. Lee; Filed July 8,2016.,	
		Medline Industries Inc. vs C.R Bard, Inc.. Exhibit 2 to Declaration of Brian Eutermoser in Support of Medline Surrepiy: Civil Action No. 1:14-cv-03618; Judge John Z. Lee; Filed September 7,2016.,	
		Medline Industries Inc. vs C.R Bard, Inc.. Exhibit C to Declaration of Dylan J Raife in Support of Bard Opening Claim Construction Brief; Civil Action No. 1:16-cv-03529; Judge Sharon Johnson Coleman: Filed November 11,2016.,	
		Medline Industries Inc. vs C.R Bard, Inc.. Exhibit E to Declaration of Nicole Smith in Support of Bard Reply to Medline Claim Construction Brief; Civil Action No 1:16-cv-03529; Judge Sharon Johnson Coleman; Filed January 27.2017.,	
		Medline Industries Inc. vs C.R Bard, Inc.. Exhibit I to Declaration of Brian Eutermoser in Support of Medline Response to Bard Opening Claim Construction; Civil Action No. 1:16-cv-03529; Judge Sharon Johnson Coleman; Filed December 9,2016.,	
		Medline Industries Inc. vs C.R Bard, Inc.. Exhibit i to Declaration of Nicoie M. Smith, Civil Action No. 1:14-cv-03618: Judge John Z. Lee; Filed June 4,2016.,	

PTO/SB/08a (01-10)
Approved for use through 07/31/2012. OMB 0651-0031
U.S. Patent and Trademark Office; U.S. DEPARTMENT OF COMMERCE

Under the Paperwork Reduction Act of 1995, no persons are required to respond to a collection of information unless it contains a valid OMB control number.

INFORMATION DISCLOSURE STATEMENT BY APPLICANT (Not for submission under 37 CFR 1.99)		
	Application Number	16/944,667
	Filing Date	July 31, 2020
	First Named Inventor	Jennifer E. Tomes
	Art Unit	
	Examiner Name	
	Attorney Docket Number	10055U CIP2 D1 C1C1C1C1C1

		Medline Industries Inc. vs C.R Bard, Inc.; Bard Reply to Medline Claim Construction Brief; Civil Action No 1 l6-cv-03529; Judge Sharon Johnson Coleman; Filed January 27,2017.,	
		Medline Industries Inc. vs C.R Bard, Inc.; C. R. Bard's Reply in Support of Claim Construction Brief; Civil Action No. 1.14-cv-03618, Judge John Z. Lee; Filed August 15,2016.,	
		Medline Industries Inc. vs C.R Bard, Inc.; Declaration of Karl L Leinsing in Support of Bard's Rebuttal on Claim Construction; Civil Action No 1:16-CV-03529; Judge Sharon Johnson Coleman; Filed January 12, 2018,	
		Medline Industries Inc. vs C.R Bard, Inc.; Declaration of Karl L. Leinsing in Support of Bard's Rebuttal on Claim Construction; Civil Action No. 1.14-cv-03618. Judge John Z. Lee; Filed August 15,2016.,	
		Medline Industries Inc. vs C.R Bard, Inc.; Declaration of Richard Meyst re Claim Construction; Civil Action No. 1.16-cv-03529. Judge Sharon Johnson Coleman; Filed December 9,2016.,	
		Medline Industries Inc. vs C.R Bard, Inc.; Exhibit 1 to Declaration of Karl L Leinsing in Support of Bard's Rebuttal on Claim Construction; Civil Action No. 1.14-cv-03618; Judge John Z. Lee, Filed August 15, P016,	
		Medline Industries Inc. vs C.R Bard, Inc.; Exhibit 1 to Declaration of Karl R Leinsing in Support of Bard Reply to Medline Claim Construction Brief; Civil Action No. 1:16-cv-03529; Judge Sharon Johnson Coleman; Filed January 27.2017,	
		Medline Industries Inc. vs C.R Bard, Inc.; Exhibit 3 to Declaration of Richard Meyst Regarding Claim Construction; Civil Action No. 1:14-cv-03618; Judge John Z. Lee, Filed July 8.2016.,	

PTO/SB/08a (01-10)
Approved for use through 07/31/2012. OMB 0651-0031
U.S. Patent and Trademark Office; U.S. DEPARTMENT OF COMMERCE

Under the Paperwork Reduction Act of 1995, no persons are required to respond to a collection of information unless it contains a valid OMB control number.

INFORMATION DISCLOSURE STATEMENT BY APPLICANT (Not for submission under 37 CFR 1.99)		
	Application Number	16/944,667
	Filing Date	July 31, 2020
	First Named Inventor	Jennifer E. Tomes
	Art Unit	
	Examiner Name	
	Attorney Docket Number	10055U CIP2 D1 C1C1C1C1C1

		Medline Industries Inc. vs C.R Bard, Inc.; Exhibit 4 to Declaration of Richard Meyst Regarding Claim Construction; Civil Action No. 1:14-cv-03618; Judge John Z. Lee. Filed July 8.2016.,	
		Medline Industries Inc. vs C.R Bard, Inc.; Exhibit A to Declaration of Barbara Weintraub re Claim Construction; Civil Action No. 1:16-cv-03529; Judge Sharon Johnson Coleman. Filed December 9.2016.,	
		Medline Industries Inc. vs C.R Bard, Inc.; Exhibit B to Declaration of Nicole Smith in Support of Bard Reply to Claim Construction Brief; Civil Action No. 1;16-cv-03529. Judge Sharon Johnson Coleman. Filed January 12.2018.,	
		Medline Industries Inc. vs C.R Bard, Inc.; Exhibit B to Declaration ot Dylan J Raife in Support of Bard's Reply Claim Construction Brief; Civil Action No. 1:14-cv-03618; Judge John Z. Lee; Filed August 15. 2016.,	
		Medline Industries Inc. vs C.R Bard, Inc.; Exhibit C to Declaration of Dylan J Raife in Support of Bard's Reply Claim Construction Brief; Civil Action No. 1:14-cv 03618; Judge John Z. Lee; Filed August 15, 2016,	
		Medline Industries Inc. vs C.R Bard, Inc.; Exhibit D to Declaration of Brian Eutermoser in Support of Medline Response to Bard Opening Claim Construction; Civil Action No. 1:16-cv-03529; Judge Sharon Johnson Coleman; Filed December 9,2016.,	
		Medline Industries Inc. vs C.R Bard, Inc.; Exhibit D to Declaration of Dylan J Raife in Support of Bard's Reply Claim Construction Brief: Civil Action No. 1.14-cv-03618; Judge John Z. Lee. Filed August 15. 2016,	
		Medline Industries Inc. vs C.R Bard, Inc.; Exhibit D to Declaration of Nicole Smith in Support of Bard Reply to Medline Claim Construction Brief; Civil Action No. 1.16-cv-03529; Judge Sharon Johnson Coleman; Filed January 27.2017,	

PTO/SB/08a (01-10)
Approved for use through 07/31/2012. OMB 0651-0031
U.S. Patent and Trademark Office; U.S. DEPARTMENT OF COMMERCE

Under the Paperwork Reduction Act of 1995, no persons are required to respond to a collection of information unless it contains a valid OMB control number.

INFORMATION DISCLOSURE STATEMENT BY APPLICANT (Not for submission under 37 CFR 1.99)		
	Application Number	16/944,667
	Filing Date	July 31, 2020
	First Named Inventor	Jennifer E. Tomes
	Art Unit	
	Examiner Name	
	Attorney Docket Number	10055U CIP2 D1 C1C1C1C1C1

		Medline Industries Inc. vs C.R Bard, Inc.; Exhibit E to Declaration of Kevin A. Lake; Civil Action No. 1:14-cv-03618, Judge John Z. Lee; Filed July 8.2016.,	
		Medline Industries Inc. vs C.R Bard, Inc.; Exhibit F lo Declaration of Kevin A Lake: Civil Action No 1:14-cv-03618. Judge John Z. Lee; Filed July 8,2016.,	
		Medline Industries Inc. vs C.R Bard, Inc.; Exhibit F to Declaration of Dylan J. Raife in Support of Bard's Reply Claim Construction Brief; Civil Action No. 1. l4-cv-03618; Judge John Z. Lee, Filed August 15, 2016,	
		Medline Industries Inc. vs C.R Bard, Inc.; Exhibit G to Declaration of Kevin A. Lake; Civil Action No. 1:14-cv-03618. Judge John Z. Lee; Filed July 8,2016.,	
		Medline Industries Inc. vs C.R Bard, Inc.; Exhibit G to Declaration of Nicole Smith in Support of Bard Reply to Medline Claim Construction Brief: Civil Action No 1:16-cv-03529: Judge Sharon Johnson Coleman; Filed January 27.2017,	
		Medline Industries Inc. vs C.R Bard, Inc.; Exhibit H to Declaration of Brian Eutermoser in Support of Medline Response to Bard Opening Claim Construction; Civil Action No. 1:16-cv-03529; Judge Sharon Johnson Coleman; Filed December 9, 2016.,	
		Medline Industries Inc. vs C.R Bard, Inc.; Exhibit H to Declaration of Dylan J. Raife in Support of Bard Opening Claim Construction Brief. Civil Action Mo. 1:16-cv-Q3529; Judge Sharon Johnson Coleman; Filed November 11,2016.,	
		Medline Industries Inc. vs C.R Bard, Inc.; Exhibit I to Declaration of Kevin A. Lake; Civil Action No. 1.14-sv-03618; Judge John 2. Lee; Filed July 8,2016.,	

Under the Paperwork Reduction Act of 1995, no persons are required to respond to a collection of information unless it contains a valid OMB control number.

INFORMATION DISCLOSURE STATEMENT BY APPLICANT (Not for submission under 37 CFR 1.99)		
	Application Number	16/944,667
	Filing Date	July 31, 2020
	First Named Inventor	Jennifer E. Tomes
	Art Unit	
	Examiner Name	
	Attorney Docket Number	10055U CIP2 D1 C1C1C1C1C1

		Medline Industries Inc. vs C.R Bard, Inc.; Exhibit N to Declaration of Brian Eutermoser in Support of Medline Response to Bard Opening Claim Construction; Civil Action No. 1:16-cv-03529; Judge Sharon Johnson Coleman; Filed December 9,2016.,	
		Medline Industries Inc. vs C.R Bard, Inc.; Medline Memo of Law re Expert Testimony in Claim Construction Proceedings; Civil Action No. 1;14-cv-03618; Judge John Z. Lee. Filed January 25,2017.,	
		Medline industries Inc. vs C.R Bard, Inc.; Medline Surreply to Claim Construction Bnef; Civil Action No 1.14-CV-Q3618: Judge John Z. Lee; Filed September 7,2016.,	
		Medline Industries Inc. vs C.R Bard, Inc.; Transcript of Deposition ot Richard Meyst; Civil Action No 1:16-W-03529. January 20,2017.,	
		Medline Industries Inc. vs C.R Bard, Inc: Exhibit G to C.R Bard's LPR 2.3 Contentions; Civil Action No. 1.17-cv-7216; Judge Sara L Ellis; Fiied January 16.2013.,	
		Medline Industries Inc. vs C.R Bard, Inc; Exhibit 3 to C.R. Bard's LPR 2.3 Contentions; Civil Action No. 1:17-CV-7216; Judge Sara L Ellis; Filed January 16,2018.,	
		Medline Industries Inc. vs C.R Bard, Inc; Exhibit C to C.R. Bard's LPR 2.3 Contentions; Civil Action No 1:17-cv-7216; Judge Sara L. Ellis; Filed January 16.2018.,	
		Medline Industries Inc. vs C.R Bard, Inc; Exhibit D to C.R. Bard's LPR 2.3 Contentions; Civil Action No 1:17-cv-7216; Judge Sara L. Etlis; Filed January 16.2018.,	

PTO/SB/08a (01-10)
Approved for use through 07/31/2012. OMB 0651-0031
U.S. Patent and Trademark Office; U.S. DEPARTMENT OF COMMERCE

Under the Paperwork Reduction Act of 1995, no persons are required to respond to a collection of information unless it contains a valid OMB control number.

INFORMATION DISCLOSURE STATEMENT BY APPLICANT (Not for submission under 37 CFR 1.99)		
	Application Number	16/944,667
	Filing Date	July 31, 2020
	First Named Inventor	Jennifer E. Tomes
	Art Unit	
	Examiner Name	
	Attorney Docket Number	10055U CIP2 D1 C1C1C1C1C1

		Medline Industries Inc. vs C.R Bard, Inc; Exhibit E to C R. Bard's LPR 2.3 Contentions; Civil Action No. 1;17-cv-7216; Judge Sara L. Ellis; Fiied January 16, 2018.,	
		Medline Industries Inc. vs C.R Bard. Inc, Exhibit H loC.R. Bard's LPR 2.3 Contentions. Civil Action No 1:17-CV-7216; Judge Sara L. Ellis: Filed January 16.2018.,	
		Medline industries Inc. vs C.R Bard. Inc., Declaration of Brian Eutermoser in Support of Medline Surreply. Civil Action No. 1:14-cv-03618, Judge John Z. Lee; Filed September 7,2016.,	
		Medline Industries Inc. vs C.R Bard. Inc., Exhibit 8 lo Declaration of Richard Meyst Regarding Claim Construction: Civil Action No. 1:14-cv-03618: Judge John Z. Lee: Filed July 8.2016.,	
		Medline Industries Inc. vs C.R Bard. Inc., Exhibit A to Declaration of Barbara Weintraub Regarding Claim Construction: Civil Action No. 1.14-cv-03618. Judge John Z. Lee; Filed July 8,2016.,	
		Medline Industries Inc. vs C.R Bard. Inc., Exhibit A to Declaration of Nicole Smith in Support of Bard Repiy lo Medline Claim Construction Brief; Civil Action No. 1.16-cv-03529; Judge Sharon Johnson Coleman; Filed January 27.2017,	
		Medline Industries Inc. vs C.R Bard. Inc., Exhibit B to Declaration of Dylan J Raife in Support of Bard Opening Claim Construction Brief; Civil Action No. 1:16-cv-03529; Judge Sharon Johnson Coleman; Filed November 11,2016.,	
		Medline Industries Inc. vs C.R Bard. Inc., Exhibit E to Declaration of Dylan J Raife in Support of Bard's Reply Claim Construction Brief; Civil Action No. 1.14-cv-03618; Judge John Z. Lee, Filed August 15, 2016,	

Under the Paperwork Reduction Act of 1995, no persons are required to respond to a collection of information unless it contains a valid OMB control number.

INFORMATION DISCLOSURE STATEMENT BY APPLICANT (Not for submission under 37 CFR 1.99)		
	Application Number	16/944,667
	Filing Date	July 31, 2020
	First Named Inventor	Jennifer E. Tomes
	Art Unit	
	Examiner Name	
	Attorney Docket Number	10055U CIP2 D1 C1C1C1C1C1

		Medline Industries Inc. vs C.R Bard. Inc.. Declaration of Richard Meyst Regarding Claim Construction; Civil Action No. 1:14-cv-03618; Judge John 2. Lee; Filed July 8.2016.,	
		Medline Industries Inc. vs C.R Bard. Inc.. Exhibit 11 to Declaration of Richard Meyst re Claim Construction: Civil Action No. 1:16-cv-03529; Judge Sharon Johnson Coleman; Filed December 9,2016.,	
		Medline Industries Inc. vs C.R Bard. Inc.. Exhibit A to Declaration of Richard Meyst Regarding Claim Construction; Civil Action No. 1;14-cv-03618; Judge John Z. Lee; Filed July 8,2016.,	
		Medline Industries Inc. vs C.R Bard. Inc.. Medline Motion lo Supplement Record on Claim Construction with Leinsing Testimony; Civil Action No 1:14-w-03618; Judge John Z. Lee; Filed March 23,2017.,	
		Medline Industries Inc. vs C.R Bard. Inc.; Bard Reply Claim Construction Brief; Civil Action No. 1:16-cv-03529; Judge Sharon Johnson Coleman; Filed January 12,2018.,	
		Medline Industries Inc. vs C.R Bard. Inc.; Bard Response to Memo of Law re Expert Testimony in Claim Construction Proceedings; Civil Action No. 1:14-cv-03618; Judge John Z. Lee. Filed February 8, 2017.,	
		Medline Industries Inc. vs C.R Bard. Inc.; Declaration of Brian Eutermoser in Support of Medline Response to Bard Opening Claim Construction Brief. Civil Action No. 1:16-cv-03529; Judge Sharon Johnson Coleman; Filed December 22,2017,	
		Medline Industries Inc. vs C.R Bard. Inc.; Declaration of Brian Eutermoser in Support of Medline Response to Bard Opening Claim Construction Brief. Civil Action No. 1:16-cv-03529; Judge Sharon Johnson Coleman; Filed December 22,2017,	

PTO/SB/08a (01-10)
Approved for use through 07/31/2012. OMB 0651-0031
U.S. Patent and Trademark Office; U.S. DEPARTMENT OF COMMERCE

Under the Paperwork Reduction Act of 1995, no persons are required to respond to a collection of information unless it contains a valid OMB control number.

INFORMATION DISCLOSURE STATEMENT BY APPLICANT (Not for submission under 37 CFR 1.99)		
	Application Number	16/944,667
	Filing Date	July 31, 2020
	First Named Inventor	Jennifer E. Tomes
	Art Unit	
	Examiner Name	
	Attorney Docket Number	10055U CIP2 D1 C1C1C1C1C1

		Medline Industries Inc. vs C.R Bard. Inc.; Declaration of Karl R. leinsing in Support of Bard Reply io Medline Claim Construction Brief; Civil Action No. 1:16-cv-03529; Judge Sharon Johnson Coleman; Filed January 27, 2017.,	
		Medline Industries Inc. vs C.R Bard. Inc.; Exhibit 3 to Declaration of Peter Sauer in Support of Medline's Motion to Supplement Record; Civil Action No. 1:14-cv-03618: Judge John Z. Lee. Filed March 23.2017.,	
		Medline Industries Inc. vs C.R Bard. Inc.; Exhibit 8 to Declaration of Richard Meyst re Claim Construction; Civil Action No. 1:16-cv-03529; Judge Sharon Johnson Coleman; Filed December 9.2016,	
		Medline Industries Inc. vs C.R Bard. Inc.; Exhibit C to Declaration of Kevin A. Lake; Civil Action No. 1 14-cv-03618. Judge John Z. Lee; Filed July 8,2016.,	
		Medline Industries Inc. vs C.R Bard. Inc.; Exhibit G to Declaration of Dylan J. Raife in Support of Bard Opening Claim Construction Brief, Civil Action No. 1:16-cv-03529; Judge Sharon Johnson Coleman; Filed November 17,2017.,	
		Medline Industries Inc. vs C.R Bard. Inc.; Exhibit G to Declaration of Brian Eutermoser in Support of Medline Response to Bard Opening Claim Construction; Civil Action No. 1:16-cv-03529; Judge Sharon Johnson Coleman; Filed December 9.2016.,	
		Medline industries Inc. vs C.R Bard. Inc.; Exhibit H to Declaration of Dylan J Raife in Support of Bard Opening Claim Construction Brief, Civil Action No. 1:16-cv-03529; Judge Sharon Johnson Coleman; Filed November 17,2017.,	
		Medline Industries Inc. vs C.R Bard. Inc.; Medline Response to Bard Opening Claim Construction; Civil Action No. 1:16-cv-03529; Judge Sharon Johnson Coleman; Filed Decembers, 2016,	

PTO/SB/08a (01-10)
Approved for use through 07/31/2012. OMB 0651-0031
U.S. Patent and Trademark Office; U.S. DEPARTMENT OF COMMERCE

Under the Paperwork Reduction Act of 1995, no persons are required to respond to a collection of information unless it contains a valid OMB control number.

INFORMATION DISCLOSURE STATEMENT BY APPLICANT (Not for submission under 37 CFR 1.99)		
	Application Number	16/944,667
	Filing Date	July 31, 2020
	First Named Inventor	Jennifer E. Tomes
	Art Unit	
	Examiner Name	
	Attorney Docket Number	10055U CIP2 D1 C1C1C1C1C1

		Medline Industries Inc. vs C.R Bard. Inc.; Transcript of Deposition of Barbara A Weinlraub; Civil Action Mo. 1:16-cv-03529; January 20.2017.,	
		Medline Industries Inc. vs C.R Bard. Inc.; Transcript of Deposition of Karl Leinsing; Civil Action No. 1:16-cv-03529; February 17,2017,	
		Medline industries Inc. vs C.R Sard, Inc.; Exhibit 9 to Declaration of Richard Meyst re Claim Construction; Civil Action No. 1:16-cv-03529; Judge Sharon Johnson Coleman; Filed December 9.2016.,	
		Medline Industries Inc. vs C.R. Bard, Inc., Bard Response to Medline Surreply re Claim Construction; Civil Action No. 1:14-cv-03618; Judge John Z. Lee; Filed September 13.2016.,	
		Medline Industries Inc. vs C.R. Bard, Inc., Exhibit 2 to Declaration of Karl L. Lansing in Support of Bard's Rebuttal on Claim Construction: Civil Action No. 1:14-cv-03618; Judge John Z. Lee; Filed August 15. 2016,	
		Medline Industries Inc. vs C.R. Bard, Inc., Exhibit B to Declaration of Kevin A. Lake. Civil Action No. 1:14-cv-03618; Judge John Z. Lee; Filed July 8,2016.,	
		Medline Industries Inc. vs C.R. Bard, Inc., Exhibit D to Declaration of Nicole Smith in Support of Bard Reply to Claim Construction Brief; Civil Action No. 116-cv-03529; Judge Sharon Johnson Coleman. Filed January 12.2018.,	
		Medline Industries Inc. vs C.R. Bard, Inc., Exhibit J to Declaration of Brian Eutermoser in Support of Medline Response to Bard Opening Claim Construction; Civil Action No. 1:16-cv-03529: Judge Sharon Johnson Coleman; Filed December 9.2016.,	

Under the Paperwork Reduction Act of 1995, no persons are required to respond to a collection of information unless it contains a valid OMB control number.

INFORMATION DISCLOSURE STATEMENT BY APPLICANT (Not for submission under 37 CFR 1.99)		
	Application Number	16/944,667
	Filing Date	July 31, 2020
	First Named Inventor	Jennifer E. Tomes
	Art Unit	
	Examiner Name	
	Attorney Docket Number	10055U CIP2 D1 C1C1C1C1C1

		Medline Industries Inc. vs C.R. Bard, Inc., Exhibit K to Declaration of Brian Eutermoser in Support of Medline Response to Bard Opening Claim Construction; Civil Action No. 1:16-cv-03529: Judge Sharon Johnson Coleman; Filed December 9 2016,,	
		Medline Industries Inc. vs C.R. Bard, Inc.. Exhibit 1 to Declaration of Peter Sauer in Support of Medline's Motion to Supplement Record; Civil Action No. 1:14-cv-03618; Judge John Z. Lee; Filed March 23.2017,	
		Medline Industries Inc. vs C.R. Bard, Inc.. Exhibit 9 to Declaration of Richard Meyst Regarding Claim Construction; Civil Action No. 1:14-cv-03618; Judge John Z. Lee; Filed July 8. 2016.,	
		Medline Industries Inc. vs C.R. Bard, Inc.. Exhibit L to Declaration of Brian Eutermoser in Support of Medline Response to Bard Opening Claim Construction; Civil Action No. 1:16-cv-03529: Judge Sharon Johnson Coleman: Filed December 9,2016.,	
		Medline Industries Inc. vs C.R. Bard, Inc.. Medline Response to Bard Claim Construction Brief. Civil Action No. 1:14~cv-03618: Judge John Z. Lee; Filed July 8,2016.,	
		Medline Industries Inc. vs C.R. Bard, Inc.: Exhibit 2 to C.R. Bard's LPR 2.3 Contentions; Civil Action No. 117-CV-7216; Judge Sara L Eiiis; Filed January 16.2018.,	
		Medline Industries Inc. vs C.R. Bard, Inc.; Declaration of Barbara Weintraub re Claim Construction: Civil Action No. 1.16-cv-03529. Judge Sharon Johnson Coleman; Filed December 9,2016.,	
		Medline Industries Inc. vs C.R. Bard, Inc.; Declaration of Brian Eutermoser in Support of Medline Response to Bard Opening Claim Construction; Civil Action No. 1:16-cv-03529; Judge Sharon Johnson Coleman; Filed December 9, 2016,	

PTO/SB/08a (01-10)
Approved for use through 07/31/2012. OMB 0651-0031
U.S. Patent and Trademark Office; U.S. DEPARTMENT OF COMMERCE

Under the Paperwork Reduction Act of 1995, no persons are required to respond to a collection of information unless it contains a valid OMB control number.

INFORMATION DISCLOSURE STATEMENT BY APPLICANT (Not for submission under 37 CFR 1.99)		
	Application Number	16/944,667
	Filing Date	July 31, 2020
	First Named Inventor	Jennifer E. Tomes
	Art Unit	
	Examiner Name	
	Attorney Docket Number	10055U CIP2 D1 C1C1C1C1C1

		Medline Industries Inc. vs C.R. Bard, Inc.; Declaration of Nicole Smith in Support of Bard Reply to Claim Construction Brief; Civil Action No. l:16-cv-03529; Judge Sharon Johnson Coleman; Filed January 12. 2018,	
		Medline Industries Inc. vs C.R. Bard, Inc.; Exhibit 10 lo Declaration of Richard Meyst re Claim Construction; Civil Action No. 1:16-cv-03529; Judge Sharon Johnson Coleman; Filed December 9.2016.,	
		Medline Industries Inc. vs C.R. Bard, Inc.; Exhibit 2 to Declaration of Peter Sauer in Support of Medline's Motion to Supplement Record; Civil Action No. 1:14-cv-03618; Judge John Z. Lee. Filed March 23. 2017.,	
		Medline Industries Inc. vs C.R. Bard, Inc.; Exhibit 5 to Declaration of Richard Meyst re Claim Construction: Civil Action No. 1:16-cv-03529; Judge Sharon Johnson Coleman, Filed December 9.2016.,	
		Medline Industries Inc. vs C.R. Bard, Inc.; Exhibit 6 to Declaration of Richard Meyst re Claim Construction; Civil Action No. 1:16-cv-03529; Judge Sharon Johnson Coleman. Filed December 9.2016.,	
		Medline Industries Inc. vs C.R. Bard, Inc.; Exhibit 7 to Declaration of Richard Meyst re Claim Construction; Civil Action No. 1:16-cv-03529; Judge Sharon Johnson Coleman; Filed December 9.2016.,	
		Medline Industries Inc. vs C.R. Bard, Inc.; Exhibit C to Declaration of Brian Eutermoser in Support of Medline Response to Bard Opening Claim Construction; Civil Action No. 1:16-cv-03529; Judge Sharon Johnson Coleman; Filed December 9,2016.,	
		Medline Industries Inc. vs C.R. Bard, Inc.; Exhibit E to Declaration of Brian Eutermoser in Support of Medline Response to Bard Opening Claim Construction; Civil Action No. 1:16-cv-03529; Judge Sharon Johnson Coleman; Filed December 9,2016.,	

Under the Paperwork Reduction Act of 1995, no persons are required to respond to a collection of information unless it contains a valid OMB control number.

INFORMATION DISCLOSURE STATEMENT BY APPLICANT (Not for submission under 37 CFR 1.99)		
	Application Number	16/944,667
	Filing Date	July 31, 2020
	First Named Inventor	Jennifer E. Tomes
	Art Unit	
	Examiner Name	
	Attorney Docket Number	10055U CIP2 D1 C1C1C1C1C1

		Medline Industries Inc. vs C.R. Bard, Inc.; Exhibit M to Declaration of Brian Eutermoser in Support of Medline Response to Bard Opening Claim Construction; Civil Action No. 1:16-cv-03529; Judge Sharon Johnson Coleman; Filed December 9,2016.,	
		Medline Industries Inc. vs C.R. Bard. Inc., Exhibit 2 to Declaration of Richard Meyst Regarding Claim Construction: Civil Action No. 1:14-cv-03618; Judge John 2. Lee. Filed July 8.2016.,	
		Medline Industries Inc. vs C.R. Bard. Inc.; Exhibit 5 to Declaration of Richard Meyst Regarding Claim Construction; Civil Action No. 1:14-cv-03618; Judge John Z. Lee. Filed July 8.2016.,	
		Medline Industries Inc. vs C.R. Bard. Inc.; Exhibit 6 to Declaration of Richard Meyst Regarding Claim Construction; Civil Action No. 1:14-cv-03618; Judge John Z. Lee. Filed July 8, 2016,	
		Medline industries Inc. vs C.R. Bard. Inc.; Medline Response to Bard Opening Claim Construction Brief; Civil Action No. t:16-cv-03529; Judge Sharon Johnson Coleman; Filed December 22,2017.,	
		Medline Industries Inc. vs OR. Bard, Inc.; Exhibit E to Declaration of Dylan J Raife in Support of Bard Opening Claim Construction Brief; Civil Action No. 1:16-cv-03529; Judge Sharon Johnson Coleman; Filed November 11.2016.,	
		Medline Industries Inc. vs C.R Bard, Inc, Exhibit I to C.R. Bard's LPR 2.3 Contentions. Civil Action No 1:17-cv-7216; Judge Sara L. Ellis; Filed January 16.2018.,	
		Medline Industries Inc. vs C.R Bard, Inc., Declaration of Dylan J Raife in Support of Bard Opening Claim Construction Brief; Civil Action No. 1:16-cv-03529; Judge Sharon Johnson Coleman; Filed November 11,2016.,	

PTO/SB/08a (01-10)
Approved for use through 07/31/2012. OMB 0651-0031
U.S. Patent and Trademark Office; U.S. DEPARTMENT OF COMMERCE

Under the Paperwork Reduction Act of 1995, no persons are required to respond to a collection of information unless it contains a valid OMB control number.

INFORMATION DISCLOSURE STATEMENT BY APPLICANT (Not for submission under 37 CFR 1.99)		
	Application Number	16/944,667
	Filing Date	July 31, 2020
	First Named Inventor	Jennifer E. Tomes
	Art Unit	
	Examiner Name	
	Attorney Docket Number	10055U CIP2 D1 C1C1C1C1C1

		Medline Industries Inc. vs C.R Bard, Inc., Exhibit 11 to Declaration of Richard Meyst Regarding Claim Construction; Civil Action No. 1:14-cv-03618; Judge John Z Lee; Filed July 8.2016.,	
		Medline Industries Inc. vs C.R Bard, Inc.. Declaration of Kevin A. Lake in Support of Medline Response to Bard Claim Construction Brief: Civil Action No. 1:14-cv-03618; Judge John Z. Lee; Filed July 8.2016.,	
		Medline Industries Inc. vs C.R Bard, Inc.; Declaration of Barbara Weintraub Regarding Claim Construction; Civil Action No. 1:14-cv-03618; Judge John Z. Lee. Filed July 8,2016.,	
		Medline Industries Inc. vs C.R Bard, inc.; Exhibit D to Declaration of Dylan J. Raife in Support of Bard Opening Claim Construction Brief. Civil Action No. 1:16-cv-03529; Judge Sharon Johnson Coleman; Filed November 11,2016.,	
		Medline Industries Inc. vs C.R Bard. Inc.; Exhibit 1 to Declaration of Richard Meyst Regarding Claim Construction; Civil Action No. 1:14-cv-036I8; Judge John Z. Lee; Filed July 8.2016.,	
		Medline Industries Inc. vs C.R. Bard, Inc, Exhibit 4 to C.R. Bard's LPR 2 3 Contentions; Civil Action No. 1:17-cv-7216; Judge Sara L. Ellis; Filed January 16.2018.,	
		Medline IndustriesflInc. vs C.R. Bard, Inc., Declaration of Peter Sauer in Support of Medline's Motion to Supplement Record; Civil Action No. 1:14-cv-03618; Judge John Z. Lee; Filed March 23,20I7,	
		Medline Industries Inc. vs C.R. Bard, Inc.; Exhibit D lo Declaration of Kevin A. Lake; Civil Action No. 1:14-cv-03618. Judge John Z. Lee; Filed July 8,2016.,	

PTO/SB/08a (01-10)
Approved for use through 07/31/2012. OMB 0651-0031
U.S. Patent and Trademark Office; U.S. DEPARTMENT OF COMMERCE

Under the Paperwork Reduction Act of 1995, no persons are required to respond to a collection of information unless it contains a valid OMB control number.

INFORMATION DISCLOSURE STATEMENT BY APPLICANT (Not for submission under 37 CFR 1.99)		
	Application Number	16/944,667
	Filing Date	July 31, 2020
	First Named Inventor	Jennifer E. Tomes
	Art Unit	
	Examiner Name	
	Attorney Docket Number	10055U CIP2 D1 C1C1C1C1C1

		Medline Industries Inc. vs C.R. Bard. Inc., Exhibit 1 to Declaration of Brian Eutermoser in Support of Medline Surreply; Civil Action No. 1:14-cv-03618; Judge John 2. Lee; Filed September 7,2016.,	
		Medline Industries Inc. vs C R. Bard, Inc.; Exhibit B to Declaration of Nicole M. Smith; Civil Action No. 1:14~cv43618; Judge John 2. Lee; Filed June 4, 2016.,	
		Medline Industries Inc. vs C R. Bard, inc.; Exhibit D to Declaration of Nicole M Smith; Civil Action No. 1:14-cv-03618; Judge John 2. Lee; Filed June 4, 2016.,	
		Medline Industries Inc. vs C R. Bard, Inc.; Exhibit E to Declaration oi Nicole M. Smith; Civil Action No, 1:14-cv-03618: Judge John 2. Lee; Filed June 4, 2016.,	
		Medline Industries Inc. vs C R. Bard, Inc.; Exhibit F to Declaration of Nicole M. Smith; Civil Action No. 1:14-cv-03618; Judge John 2. Lee; Filed June 4, 2016.,	
		Medline Industries Inc. vs C R. Bard, Inc; C R. Bard's Opening Claim Construction Bnel; Civil Action No. 1:14-cv-03618; Judge John 2. Lee; Filed June 4, 2016.,	
		Medline Industries Inc. vs C R. Bard, inc; C.R Bard's Motion for Leave to Add Counterclaims; Civil Action No. 1:17-cv-7216; Judge Sara L. Ellis; Filed February 27,2018,	
		Medline Industries Inc. vs C R. Bard, Inc; Declaration of Dylan Raife in Support of Motion for Leave to Add CounterClaims; Civil Action No. 1:17-cv-7216; Judge Sara L. Eliis; Filed February 27,2018.,	

PTO/SB/08a (01-10)
Approved for use through 07/31/2012. OMB 0651-0031
U.S. Patent and Trademark Office; U.S. DEPARTMENT OF COMMERCE

Under the Paperwork Reduction Act of 1995, no persons are required to respond to a collection of information unless it contains a valid OMB control number.

INFORMATION DISCLOSURE STATEMENT BY APPLICANT (Not for submission under 37 CFR 1.99)		
	Application Number	16/944,667
	Filing Date	July 31, 2020
	First Named Inventor	Jennifer E. Tomes
	Art Unit	
	Examiner Name	
	Attorney Docket Number	10055U CIP2 D1 C1C1C1C1C1

		Medline Industries Inc. vs C R. Bard, Inc; Exhibit C to Declaration of Dylan Raife in Support of Motion for Leave to Add Counterclaims; Civil Action No. 1.17-cv-7216; Judge Sara L. Ellis; Filed February 27,2018.,	
		Medline industries Inc. vs C R. Bard. Inc; Exhibit 1 to C R. Bard's LPR 2.3 Contentions, Civil Action No 1:17-cv-7216, Judge Sara L. Ellis. Filed January 16,2018.,	
		Medline Industries Inc. vs C.R Bard, Inc., Exhibit A to Declaration of Richard Meyst re Claim Construction: Civil Action No. 1:16-cv-03529: Judge Sharon Johnson Coleman; Filed December 9.2016.,	
		Medline Industries Inc. vs C.R Bard, Inc.; Exhibit B lo Declaration of Nicole Smith in Support of Bard Reply to Medline Claim Construction Brief; Civil Action No. 1.16-cv-03529; Judge Sharon Johnson Coleman; Filed January 27.2017,	
		Medline Industries Inc. vs C.R. Bard, Inc.; C R. Bard's Final LPR 2.3 Contentions; Civil Action No 1:17-cv-7216; Judge Sara L. Ellis; Filed July 24, 2018.,	
		Medline Industries Inc. vs C.R. Bard, Inc.; Exhibit A – C. R. Bard's Final LPR 2.3 Contentions; Civil Action No 1:17-cv-7216; Judge Sara L. Ellis; Filed July 24, 2018.,	
		Medline Industries Inc. vs C.R. Bard, Inc.; Exhibit B – C. R. Bard's Final LPR 2.3 Contentions; Civil Action No 1:17-cv-7216; Judge Sara L. Ellis; Filed July 24, 2018.,	
		Medline Industries Inc. vs C.R. Bard, Inc.; Exhibit C– C. R. Bard's Final LPR 2.3 Contentions; Civil Action No 1:17-cv-7216; Judge Sara L. Ellis; Filed July 24, 2018.,	

Under the Paperwork Reduction Act of 1995, no persons are required to respond to a collection of information unless it contains a valid OMB control number.

INFORMATION DISCLOSURE STATEMENT BY APPLICANT (Not for submission under 37 CFR 1.99)		
	Application Number	16/944,667
	Filing Date	July 31, 2020
	First Named Inventor	Jennifer E. Tomes
	Art Unit	
	Examiner Name	
	Attorney Docket Number	10055U CIP2 D1 C1C1C1C1C1

		Medline Industries Inc. vs C.R. Bard, Inc.; Exhibit C to Declaration of Nicole M. Smith; Civil Action No. 1:14-cv-03618; Judge John 2. Lee; Filed June 4. 2016.,	
		Medline Industries Inc. vs C.R. Bard, Inc.; Exhibit D– C. R. Bard's Final LPR 2.3 Contentions; Civil Action No 1:17-cv-7216; Judge Sara L. Ellis; Filed July 24, 2018.,	
		Medline Industries Inc. vs C.R. Bard, Inc.; Exhibit E– C. R. Bard's Final LPR 2.3 Contentions; Civil Action No 1:17-cv-7216; Judge Sara L. Ellis; Filed July 24, 2018.,	
		Medline Industries Inc. vs C.R. Bard, Inc.; Exhibit F – C. R. Bard's Final LPR 2.3 Contentions; Civil Action No 1:17-cv-7216; Judge Sara L. Ellis; Filed July 24, 2018.,	
		Medline Industries Inc. vs C.R. Bard, Inc.; Exhibit G – C. R. Bard's Final LPR 2.3 Contentions; Civil Action No 1:17-cv-7216; Judge Sara L. Ellis; Filed July 24, 2018.,	
		Medline Industries Inc. vs C.R. Bard, Inc.; Exhibit H – C. R. Bard's Final LPR 2.3 Contentions; Civil Action No 1:17-cv-7216; Judge Sara L. Ellis; Filed July 24, 2018.,	
		Medline Industries Inc. vs C.R. Bard, Inc.; Exhibit I – C. R. Bard's Final LPR 2.3 Contentions; Civil Action No 1:17-cv-7216; Judge Sara L. Ellis; Filed July 24, 2018.,	
		Medline Industries Inc. vs C.R. Bard, Inc.; Exhibit J – C. R. Bard's Final LPR 2.3 Contentions; Civil Action No 1:17-cv-7216; Judge Sara L. Ellis; Filed July 24, 2018.,	

Under the Paperwork Reduction Act of 1995, no persons are required to respond to a collection of information unless it contains a valid OMB control number.

INFORMATION DISCLOSURE STATEMENT BY APPLICANT (Not for submission under 37 CFR 1.99)		
	Application Number	16/944,667
	Filing Date	July 31, 2020
	First Named Inventor	Jennifer E. Tomes
	Art Unit	
	Examiner Name	
	Attorney Docket Number	10055U CIP2 D1 C1C1C1C1C1

		Medline Industries Inc. vs C.R. Bard, Inc.; Exhibit K – C. R. Bard's Final LPR 2.3 Contentions; Civil Action No 1:17-cv-7216; Judge Sara L. Ellis; Filed July 24, 2018.,	
		Medline Industries Inc. vs C.R. Bard, Inc.; Exhibit L – C. R. Bard's Final LPR 2.3 Contentions; Civil Action No 1:17-cv-7216; Judge Sara L. Ellis; Filed July 24, 2018.,	
		Medline Industries Inc. vs C.R. Bard, Inc.; Exhibit M – C. R. Bard's Final LPR 2.3 Contentions; Civil Action No 1:17-cv-7216; Judge Sara L. Ellis; Filed July 24, 2018.,	
		Medline Industries Inc. vs C.R. Bard, Inc.; Exhibit N – C. R. Bard's Final LPR 2.3 Contentions; Civil Action No 1:17-cv-7216; Judge Sara L. Ellis; Filed July 24, 2018.,	
		Medline Industries Inc. vs C.R. Bard, Inc.; Exhibit O – C. R. Bard's Final LPR 2.3 Contentions; Civil Action No 1:17-cv-7216; Judge Sara L. Ellis; Filed July 24, 2018.,	
		Medline Industries Inc. vs C.R. Bard, Inc.; Exhibit P – C. R. Bard's Final LPR 2.3 Contentions; Civil Action No 1:17-cv-7216; Judge Sara L. Ellis; Filed July 24, 2018.,	
		Medline Industries Inc. vs C.R. Bard, Inc.; Exhibit Q – C. R. Bard's Final LPR 2.3 Contentions; Civil Action No 1:17-cv-7216; Judge Sara L. Ellis; Filed July 24, 2018.,	
		Medline Industries Inc. vs C.R. Bard, Inc.; Exhibit R – C. R. Bard's Final LPR 2.3 Contentions; Civil Action No 1:17-cv-7216; Judge Sara L. Ellis; Filed July 24, 2018.,	

Under the Paperwork Reduction Act of 1995, no persons are required to respond to a collection of information unless it contains a valid OMB control number.

INFORMATION DISCLOSURE STATEMENT BY APPLICANT (Not for submission under 37 CFR 1.99)		
	Application Number	16/944,667
	Filing Date	July 31, 2020
	First Named Inventor	Jennifer E. Tomes
	Art Unit	
	Examiner Name	
	Attorney Docket Number	10055U CIP2 D1 C1C1C1C1C1

		Medline Industries Inc. vs C.R. Bard, Inc.; Exhibit S – C. R. Bard's Final LPR 2.3 Contentions; Civil Action No 1:17-cv-7216; Judge Sara L. Ellis; Filed July 24, 2018.,	
		Medline Industries Inc. vs C.R. Bard, Inc.; Exhibit T – C. R. Bard's Final LPR 2.3 Contentions; Civil Action No 1:17-cv-7216; Judge Sara L. Ellis; Filed July 24, 2018.,	
		Medline Industries Inc. vs C.R. Bard, Inc; C.R. Bard's LPR 3.1 Contentions; Civil Action No. 1:16-cs-3529; Judge Sharon Johnson Coleman; Filed August 26, 2016,	
		Medline Industries Inc. vs C.R. Bard, Inc; Exhibit B to C R. Bard's LPR 2.3 Contentions; Civil Action No 1:17-cv-7216; Judge Sara L. Ellis; Filed January 16.2018.,	
		Medline Industries vs. CR Bard, Inc; No 14-cv-3618; C.R. Bard's LPR 3.1 Contentions; Filed November 24, 2015,	
		Medline Industries, Inc. vs C.R. Bard, Inc; No. 1:14-cv-03618; Defendant C.R. Bards, Inc's Second Amended Answer to Second Amended Complaint; Filed September 25, 2015,	
		Medline Industries, Inc. vs C.R. Bard, Inc; No. 1:14-cv-03618; Medline Industries Inc's Opposition to C.R.Bard Inc's Motion For Leave to File Second Amended Answer to Add Counterclaim; Filed October 20, 2015,	
		Medline Industries, Inc. vs C.R. Bard, Inc; No. 1:14-cv-03618; Medline Industries, Inc.'s Response to C.R. Bard's Initial Invalidity Contentions; Exhibits A-H; Dated September 19, 2014,	

PTO/SB/08a (01-10)
Approved for use through 07/31/2012. OMB 0651-0031
U.S. Patent and Trademark Office; U.S. DEPARTMENT OF COMMERCE

Under the Paperwork Reduction Act of 1995, no persons are required to respond to a collection of information unless it contains a valid OMB control number.

INFORMATION DISCLOSURE STATEMENT BY APPLICANT (Not for submission under 37 CFR 1.99)		
	Application Number	16/944,667
	Filing Date	July 31, 2020
	First Named Inventor	Jennifer E. Tomes
	Art Unit	
	Examiner Name	
	Attorney Docket Number	10055U CIP2 D1 C1C1C1C1C1

		Medline Industries, Inc. vs C.R. Bard, Inc; No. 1:14-cv-03618; Notice of Medline Industries Inc's Motion to Dismiss C.R. Bard Inc's Inequitable Conduct Counterclaim and to strike affirmative defense for the '786 Patent; Filed October 20, 2015,	
		Medline Industries, Inc. vs C.R. Bard, Inc; No. 1:14-cv-03618; Response to Medline Industries, Inc.'s First Set of Interrogatories; Dated September 26, 2014,	
		Medline Industries, Inc. vs C.R. Bard, Inc; No. 1:14-cv-3618; Responses to Medline Industries, Inc.'s First set of Requests for the Production of Documents; Dated September 26, 2014,	
		Medline Industries, Inc. vs C.R. Bard, Inc; No. 1:17-cv-03618; Medline's Supplemental Responses to Bard's Interrogatory No. 1-24 (redacted), dated April 20, 2016; Filed as IPR Petition Exhibit 2013 in IPR2019-00035 and IPR2019-00036,	
		Medline Industries, Inc. vs. C.R. Bard, Inc.; No. 1:17-cv-3539; Medline's Second Supplemental Responses to Bard's Interrogatory No. 11, 14, and 15 (redacted), dated October 26, 2017; Filed as IPR Petition Exhibit 2014 in IPR2019-00035 and IPR2019-00036,	
		Medline Industries, Inc. vs. C.R. Bard, Inc.; No. 1:17-cv-7216; Medline's Objection and Response to Bard's First Set of Interrogatories (redacted), dated October 1, 2018; Filed as IPR Petition Exhibit 2012 in IPR2019-00035 and IPR2019-00036,	
		Medline Industries, Inc. vs. C.R. Bard, Inc.; No. 14-cv-3618; C.R. Bard's LPR 2.3 Contentions - Initial Non-Infringement; Exhibits 1 and A-H; Dated September 5, 2014,	
		Medline Industries, Inc. vs. C.R. Bard, Inc.; No. 14-cv-3618; Memorandum in Support of C.R. Bard's Motion for Leave to File Second Amended Answer to Add Counterclaim; Filed September 25, 2015,	

Under the Paperwork Reduction Act of 1995, no persons are required to respond to a collection of information unless it contains a valid OMB control number.

INFORMATION DISCLOSURE STATEMENT BY APPLICANT (Not for submission under 37 CFR 1.99)		
	Application Number	16/944,667
	Filing Date	July 31, 2020
	First Named Inventor	Jennifer E. Tomes
	Art Unit	
	Examiner Name	
	Attorney Docket Number	10055U CIP2 D1 C1C1C1C1C1

		Medline Industries, Inc. vs. C.R. Bard, Inc.: Transcript of Proceedings - Claim Construction Hearing: Civil Action No. 1:14-cv-3618. Judge John Z. Lee; Dated January 11, 2017.	
		Naming Characters on Cards website. URL:<https://web.archive.org/web/20060219171403/http://www.hubbardscupboard.org/brown_bear_brown_bear.html>. (2006)…Retrieved form Internet 11 Dec. 2013.	
		Notice of Allowance; EP Application No. 10251025.2-1501; Reference P112645EP00; Attorney Docket No. BPMDL0005JT EP (10055U EP); Mailed February 18, 2016,	
		Inter Partes Review - Patent Owner's Prelim. Response; Patent 9,808,596; Inter Partes Review No. IPR2019-00223; Filed March 7, 2019,	
		Medline Industries Inc. vs. C.R Bard, Inc. Bard Opening Claim Construction Brief; Civil Action No 1:16-cv-03529; Judge Sharon Johnson Coleman; Filed November 17, 2017.	
		Webster's Dictionary Definition of "Intend"; Webster's Third New International Dictionary of the English Language unabridged (1961); filed as IPR Petition Exhibit 2016 in IPR 2019-00035,	
		"Appeal Decision", USSN 12/785,064; Filed May 21, 2010; Attorney Docket No. BPMDL0018RL (10212U); Mailed May 18, 2016,	
		"Article 94(3) EPC Examination", European Application No. 10 251 025.2-1501; Reference P112645EP00; Attorney Docket No. BPMDL0005JT.EPO (10055U EP); Mailed March 13, 2015,	

PTO/SB/08a (01-10)
Approved for use through 07/31/2012. OMB 0651-0031
U.S. Patent and Trademark Office; U.S. DEPARTMENT OF COMMERCE

Under the Paperwork Reduction Act of 1995, no persons are required to respond to a collection of information unless it contains a valid OMB control number.

INFORMATION DISCLOSURE STATEMENT BY APPLICANT (Not for submission under 37 CFR 1.99)		
	Application Number	16/944,667
	Filing Date	July 31, 2020
	First Named Inventor	Jennifer E. Tomes
	Art Unit	
	Examiner Name	
	Attorney Docket Number	10055U CIP2 D1 C1C1C1C1C1

		"Australian First Exam Report", AU Patent Application No. 2011351971; Patent Examination Report No. 1; Mailed 25JL2015,	
		"Bard IPR Exhibit", "Inter Partes Review Petition", IPR Exhibit - Carrow Declaration for US Patent No. 8,631,935; Susan Carrow Declaration; Mailed December 30, 2014,	
		"Bard Medical Division Care & Catheterization Script", Care & Catheterization/Preventing UTI Script for education video; Preventing UTI: Care and Catheterization Techniques; Copyright 2006; AV0512-06 R12/05 XXX,	
		"Bard Publication", "A few important words about Catheter Care"; C.R. Bard, Inc.; Copyright 2001 C.R. Bard, Inc.,	
		"Bardex I.C. Complete Care StateLock Device 350 ml Urine Meter Foley Tray with Bacteriostatic Collection System", Bard Infection Control System; Bardex I.C. Complete Care Directions for Use; Copyright Dated September 2006,	
		"Bardex I.C. Infection Control 350ml Urine Meter Foley Tray", Bard Infection Control System; Bardex I.C. Urine Meter Foley Tray Directions for Use; Copyright Dated 2006,	
		"Bardex I.C. Infection Control Foley Tray", Bard Infection Control System; Bardex I.C. Directions for Use Infection Control Foley Tray; Copyright Dated 2006,	
		"Decision Instituting Inter Partes Review", IPR2019-00035; Patent No. 9,745,088; Mailed April 10, 2019,	

PTO/SB/08a (01-10)
Approved for use through 07/31/2012. OMB 0651-0031
U.S. Patent and Trademark Office; U.S. DEPARTMENT OF COMMERCE

Under the Paperwork Reduction Act of 1995, no persons are required to respond to a collection of information unless it contains a valid OMB control number.

INFORMATION DISCLOSURE STATEMENT BY APPLICANT (Not for submission under 37 CFR 1.99)		
	Application Number	16/944,667
	Filing Date	July 31, 2020
	First Named Inventor	Jennifer E. Tomes
	Art Unit	
	Examiner Name	
	Attorney Docket Number	10055U CIP2 D1 C1C1C1C1C1

		"Decision Instituting Inter Partes Review", IPR2019-00036; Patent No. 9,745,088; Mailed April 10, 2019,	
		"Decision Instituting IPR", IPR 2019-00208; Patent No. 9,808,400; Dated June 6, 2019,	
		"Decision Instituting Review", IPR 2019-00223; Patent No. 9,808,596; Dated June 6, 2019,	
		"DVD", Entitled "Preventing UTI: Care and Catheterization Techniques"; Publication Date unknown but believed to be prior to 2007,	
		"EPO Intent to Grant", EPO Application No. 10251024.5; Filed June 2, 2010; Attorney Docket No. P112645EP01 (BPMDL0005JT.P1.EPO); Mailed November 2, 2012,	
		"Examiner's Answer", USSN 13/153,265; Filed June 3, 2011; Attorney Docket No. BPMDL0005JT.P5 (10055U CIP5); Mailed December 17, 2013,	
		"Expert Report of Barbara Weintraub", Civil Action No. 1:14-cv-03618; Confidential Information Redacted Pursuant to Court Order; Dated June 14, 2019,	
		"Expert Report of Barbara Weintraub", Civil Action No. 1:16-cv-03529; Confidential Information Redacted Pursuant to Court Order; Dated August 1, 2019,	

PTO/SB/08a (01-10)
Approved for use through 07/31/2012. OMB 0651-0031
U.S. Patent and Trademark Office; U.S. DEPARTMENT OF COMMERCE

Under the Paperwork Reduction Act of 1995, no persons are required to respond to a collection of information unless it contains a valid OMB control number.

INFORMATION DISCLOSURE STATEMENT BY APPLICANT (Not for submission under 37 CFR 1.99)		
	Application Number	16/944,667
	Filing Date	July 31, 2020
	First Named Inventor	Jennifer E. Tomes
	Art Unit	
	Examiner Name	
	Attorney Docket Number	10055U CIP2 D1 C1C1C1C1C1

		"Expert Report of Dr. Edward Yun", Civil Action No. 1:14-cv-03618; Confidential Information Redacted Pursuant to Court Order; Dated June 13, 2019,	
		"Expert Report of Dr. Edward Yun", Civil Action No. 16-cv-3529; Confidential Information Redacted Pursuant to Court Order; Dated August 1, 2019,	
		"Expert Report of Dr. Edward Yun Related to Damages, Non-Infringement, and New Evidence of Alleged Secondary Considerations", Civil Action No. 1:14-cv-03618; Confidential Information Redacted Pursuant to Court Order; Dated July 23, 2019,	
		"Expert Report of Dr. John Abraham", Civil Action No. 1:14-cv-03618; Confidential Information Redacted Pursuant to Court Order; Dated June 14, 2019,	
		"Expert Report of Dr. John Abraham", Civil Action No. 1:16-cv-03529; Confidential Information Redacted Pursuant to Court Order; Dated August 1, 2019,	
		"Expert Report of Dr. Steven Brooks", Civil Action No. 14-cv-3618; Confidential Information Redacted Pursuant to Court Order; Dated July 25, 2019,	
		"Expert Report of Karl R Leinsing, MSME, PE Regarding Alleged Evidence of Secondary Considerations", Civil Action No. 1:14-cv-3618; Confidential Information Redacted Pursuant to Court Order; Dated June 14, 2019,	
		"Expert Validity Report of Dr. John Abraham", Civil Action No. 1:14-cv-03618; Confidential Information Redacted Pursuant to Court Order; Dated July 25, 2019,	

Under the Paperwork Reduction Act of 1995, no persons are required to respond to a collection of information unless it contains a valid OMB control number.

INFORMATION DISCLOSURE STATEMENT BY APPLICANT (Not for submission under 37 CFR 1.99)		
	Application Number	16/944,667
	Filing Date	July 31, 2020
	First Named Inventor	Jennifer E. Tomes
	Art Unit	
	Examiner Name	
	Attorney Docket Number	10055U CIP2 D1 C1C1C1C1C1

		"Extended EPO Exam Report", EPO App No.: 10251025.2; Filed June 2, 2010; Attorney Docket No. BPMDL0005JT.EPO (10055U EP); Mailed December 17, 2013,	
		Medline Industries, Inc. vs. C.R. Bard, Inc.; Exhibit J to Declaration of Nicole M. Smith; Civil Action No. 1:14-cv-03618; Judge John Z. Lee; Filed June 4, 2016.	
		"Instructions", Naming a character website. URL: <https://web.archive.org/web/20080410122058/http://www.wilihow.com/Make-Your-Own-Anime-or-Mange-Character>. 2008. Retrieved from Internet 10 Dec. 2013.	
		"Intent to Grant", Chinese Application No. 201180066491.4; Filed December 30, 2011; Attorney Docket No. BPMDL005JT.P4.CHIN (10055U CIP4 CN); Mailed July 6, 2016,	
		"Intent to Grant", European Application No. 16177903.8-1501; Reference No. SJG/P112645EP02; Mailed September 18, 2017,	
		"Inter Partes Review - Patent Owner Response", Inter Partes Review - Patent Owner Response; Patent 8,631,935; Inter Partes Review No. IPR2015-00513; Filed April 21, 2015,	
		"Inter Partes Review - Patent Owner Response", Inter Partes Review - Patent Owner Response; Patent No. 8,448,786; IPR2015-00509; Filed April 22, 2015,	
		"Inter Partes Review - Patent Owner Response", Inter Partes Review - Patent Owner Response; Patent No. 8,631,935; Inter Partes Review No. IPR2015-00511; Filed April 22, 2015,	

PTO/SB/08a (01-10)
Approved for use through 07/31/2012. OMB 0651-0031
U.S. Patent and Trademark Office; U.S. DEPARTMENT OF COMMERCE

Under the Paperwork Reduction Act of 1995, no persons are required to respond to a collection of information unless it contains a valid OMB control number.

INFORMATION DISCLOSURE STATEMENT BY APPLICANT (Not for submission under 37 CFR 1.99)		
	Application Number	16/944,667
	Filing Date	July 31, 2020
	First Named Inventor	Jennifer E. Tomes
	Art Unit	
	Examiner Name	
	Attorney Docket Number	10055U CIP2 D1 C1C1C1C1C1

		"Inter Partes Review - Patent Owner Response", Inter Partes Review - Patent Owner Response; Patent No. 8,678,190; Inter Partes Review No.: IPR2015-00514; Filed April 21, 2015,	
		"Inter Partes Review - Patent Owner's Prelim Response", Patent 9,745,088; Inter Partes Review No. IPR2019-00035; Filed January 11, 2019,	
		"Inter Partes Review - Patent Owner's Prelim Response", Patent 9,745,088; Inter Partes Review No. IPR2019-00036; Filed January 11, 2019,	
		"Inter Partes Review No. IPR2019-00109", Petition for Review; Patent No. 9,795,761; Filed October 24, 2018,	
		"Inter Partes Review Petition", Exhibit - Amendment filed on April 3, 2013 for USSN 12/495,148; Attorney Docket No. BPMDL0005JT (10055U); Application Filed June 30, 2009,	
		"Inter Partes Review Petition", Exhibit - Bard DFU; Bardex Infection Control Foley Tray; Copyright 2006, publication date unknown,	
		"Inter Partes Review Petition", Exhibit - Bardex DFU; Directions for Use/Patient Education Information - Urology; Unknown Publication Date,	
		"Inter Partes Review Petition", Exhibit - Declaration of Susan Carrow for US Patent No. 8,631,935 claims 1-4 and 11-20; Mailed December 30, 2014,	

PTO/SB/08a (01-10)
Approved for use through 07/31/2012. OMB 0651-0031
U.S. Patent and Trademark Office; U.S. DEPARTMENT OF COMMERCE

Under the Paperwork Reduction Act of 1995, no persons are required to respond to a collection of information unless it contains a valid OMB control number.

INFORMATION DISCLOSURE STATEMENT BY APPLICANT (Not for submission under 37 CFR 1.99)		
	Application Number	16/944,667
	Filing Date	July 31, 2020
	First Named Inventor	Jennifer E. Tomes
	Art Unit	
	Examiner Name	
	Attorney Docket Number	10055U CIP2 D1 C1C1C1C1C1

		"Inter Partes Review Petition", Exhibit - Dorland's Definition of Bag; Dorland's Illustrated Medical Dictionary; 31st Edition; Publication Date Unknown,	
		"Inter Partes Review Petition", Exhibit - EC Guideline 1998; "A Guideline on the Readability of the Label and Package Leaflet of Medicinal Products for Human Use"; Published September 29, 1998 (29.09.98); Mailed December 30, 2014,	
		"Inter Partes Review Petition", Exhibit - Encyclopedia Dictionary of Medicine, Nursing and Allied Health; Miller Keane, Seventh Edition,	
		"Inter Partes Review Petition", Exhibit - FAQs "Catheter-Associated Urinary Tract Infection"; Unknown Publisher; Unknown Publication Date,	
		"Inter Partes Review Petition", Exhibit - FDA Article; "Guidance for the Content of Premarket Notifications fro Conventional and Antimicrobial Foley Catheters; http://www.fda.gov/medicaldevices/deviceregulationandguidance/guidancedocuments/ucm080884.htm; Unknown Publication Date,	
		"Inter Partes Review Petition", Exhibit - Health Protection Scotland; CAUTI Maintenance Bundel; Version 2, February 2008,	
		"Inter Partes Review Petition", Exhibit - Infection Control Today Article; Medical Center Cuts Catheterizations by 21 Percent with Foley Catheter Management System; Published 2010,	
		"Inter Partes Review Petition", Exhibit - Kimmel Declaration for US Patent No. 8,631,935 claims 1-4 and 11-20; Declaration of Dr. Robert M. Kimmel; Mailed December 30, 2014,	

PTO/SB/08a (01-10)
Approved for use through 07/31/2012. OMB 0651-0031
U.S. Patent and Trademark Office; U.S. DEPARTMENT OF COMMERCE

Under the Paperwork Reduction Act of 1995, no persons are required to respond to a collection of information unless it contains a valid OMB control number.

INFORMATION DISCLOSURE STATEMENT BY APPLICANT (Not for submission under 37 CFR 1.99)		
	Application Number	16/944,667
	Filing Date	July 31, 2020
	First Named Inventor	Jennifer E. Tomes
	Art Unit	
	Examiner Name	
	Attorney Docket Number	10055U CIP2 D1 C1C1C1C1C1

		"Inter Partes Review Petition", Exhibit - Medical News Today Article; "'Getting to Zero:' Medline's' Erase Cauti Program Helps Hospitals Reduce Catheter Use by 20 Percent; Article Date April 13, 2011,	
		"Inter Partes Review Petition", Exhibit - Medline Initial Infringement Contentions; Medline Industries vs. C.R. Bard; Dated August 22, 2014,	
		"Inter Partes Review Petition", Exhibit - Morning Start Article; "Floyd Medical Center Reduces Catheter-Associated Urinary Tract Infections 83 Percent and Catheter Use by 23 Percent"; Published January 2011,	
		"Inter Partes Review Petition", Exhibit - Mosby's Pocket Guide Excerpt; Mosby's Pocket Guide to Basic Skills and Procedures; Sixth Edition; Perry & Potter; "Urinary Catheter: Indwelling, Straight, Care and Removal"; Unknown Publication Date,	
		"Inter Partes Review Petition", Exhibit - Nursing Standard; Article in Learning Zone - Continue Professional Development; "Reducing the risks associated with urinary catheters"; Published March 25, 2009,	
		"Inter Partes Review Petition", Exhibit - RCE Filed November May 31, 2011 for USSN 12/495,148; Attorney Docket No. BPMDL0005JT (10055U); Application Filed June 30, 2009,	
		"Inter Partes Review Petition", Exhibit - Response to Office Action in USSN 12/495,148; Attorney Reference No. BPMDL0005JT (10055U); Application Filed June 30, 2009; Response Filed November 19, 2010,	
		"Inter Partes Review Petition", Exhibit - Soroka Glossary 'Bag'; Illustrated Glossary of Packaging Terminology, second edition; Walter Soroka; publication unknown,	

PTO/SB/08a (01-10)
Approved for use through 07/31/2012. OMB 0651-0031
U.S. Patent and Trademark Office; U.S. DEPARTMENT OF COMMERCE

Under the Paperwork Reduction Act of 1995, no persons are required to respond to a collection of information unless it contains a valid OMB control number.

INFORMATION DISCLOSURE STATEMENT BY APPLICANT (Not for submission under 37 CFR 1.99)		
	Application Number	16/944,667
	Filing Date	July 31, 2020
	First Named Inventor	Jennifer E. Tomes
	Art Unit	
	Examiner Name	
	Attorney Docket Number	10055U CIP2 D1 C1C1C1C1C1

		"Inter Partes Review Petition", Exhibit - Soroka Glossary_wrap; Illustrated Glossary of Packaging Terminology; second edition; publication date unknown,	
		"Inter Partes Review Petition", Exhibit - The Journal of Healthcare Contracting, October 2012; "Catheter-associated urinary tract infections",	
		"Inter Partes Review Petition", Exhibit - Webster's Dictionary Definition of Dispose; Webster's Third New International Dictionary; Copyright 2003; publication date unknown,	
		"Inter Partes Review Petition", Exhibit; Carrow CV - Susan Carrow CV; Mailed December 30, 2014,	
		"Inter Partes Review Petition", Exhibit; EC Guideline 2009; "Guideline on the Readability of the Labeling and Package Leaflet of Medicinal Products for Human Use"; Revision 1 Published January 12, 2009 (12.1.2009); Mailed December 30, 2014,	
		"Inter Partes Review Petition", Exhibit; Kimmel CV - Dr. Robert M. Kimmel; Mailed December 30, 2014,	
		"Inter Partes Review Petition", IPR Exhibit - Carrow Declaration for US Patent No. 8,631,935 claims 1-4 and 11-20; Susan Carrow Declaration; Mailed December 30, 2014,	
		"Inter Partes Review Petition", IPR Exhibit - Carrow Declaration for US Patent No. 8,768,190; Declaration of Susan Carrow; Mailed December 30, 2014,	

PTO/SB/08a (01-10)
Approved for use through 07/31/2012. OMB 0651-0031
U.S. Patent and Trademark Office; U.S. DEPARTMENT OF COMMERCE

Under the Paperwork Reduction Act of 1995, no persons are required to respond to a collection of information unless it contains a valid OMB control number.

INFORMATION DISCLOSURE STATEMENT BY APPLICANT (Not for submission under 37 CFR 1.99)		
	Application Number	16/944,667
	Filing Date	July 31, 2020
	First Named Inventor	Jennifer E. Tomes
	Art Unit	
	Examiner Name	
	Attorney Docket Number	10055U CIP2 D1 C1C1C1C1C1

		"Inter Partes Review Petition", IPR Exhibit - Kimmel Declaration 8,448,786 Patent; Dr. Robert M. Kimmel Declaration; Received December 30, 2014,	
		"Inter Partes Review Petition", IPR Exhibit - Kimmel Declaration for US Patent No. 8,631,935 claims 1-4 and 11-20; Declaration of Dr. Robert M. Kimmel; Mailed December 30, 2014,	
		"Inter Partes Review Petition", IPR Exhibit - Kimmel Declaration for US Patent No. 8,631,935 claims 7-8, 10, 21-23, 25, 27-28, and 30-34; Declaration of Dr. Robert M. Kimmel; Mailed December 30, 2014,	
		"Inter Partes Review Petition", IPR Exhibit - Kimmel Declaration for US Patent No. 8,768,190; Declaration of Dr. Robert M. Kimmel; Mailed December 30, 2014,	
		"Inter Partes Review Petition", IPR Exhibit - Susan Carrow Declaration 8,448,786 patent; mailed December 30, 2014,	
		"Inter Partes Review Petition for 8,448,786", US Patent No. 8,448,786; Filed December 30, 2014; Mailed December 30, 2014,	
		"Inter Partes Review Petition for 8,631,935", Inter Partes Review Petition for 8,631,935 for claims 1-4 and 11-20; Filed December 30, 2014,	
		"Inter Partes Review Petition for 8,631,935", Inter Partes Review Petition for 8,631,935 for Claims 7-8, 10, 21-23, 25, 27-28, and 30-34; Filed December 30, 2014,	

Under the Paperwork Reduction Act of 1995, no persons are required to respond to a collection of information unless it contains a valid OMB control number.

INFORMATION DISCLOSURE STATEMENT BY APPLICANT (Not for submission under 37 CFR 1.99)		
	Application Number	16/944,667
	Filing Date	July 31, 2020
	First Named Inventor	Jennifer E. Tomes
	Art Unit	
	Examiner Name	
	Attorney Docket Number	10055U CIP2 D1 C1C1C1C1C1

		"Inter Partes Review Petition for 8,678,190", Inter Partes Review Petition for 8,678,190; Filed December 30, 2014,	
		"Inter Partes Review Petition for US Patent No. 9,745,088", IPR-0036; Filed October 4, 2018,	
		"Inter Partes Review Petition for US Patent No. 9,745,088", IPR2019-0035, filed October 4, 2018,	
		"IPR 2015-00514 - Patent Owner's Objection to Evidence", IPR 2015-00514 - Patent Owner's Objection to Evidence Submitted During a Preliminary Proceeding; Patent No. 8,678,190; Mailed July 13, 2015,	
		"IPR 2015-00514 - Patent Owner's Request for Adverse Judgment", Patent No. 8,678,190; Mailed July 23, 2015,	
		"IPR 2015-00514 - Request for Rehearing Denied", IPR2015-00514; Patent No. 8,678,190; Decision on Request for Rehearing - Denied; Mailed July 16, 2015,	
		"IPR 2015-00514 Petitioner's Request for Rehearing", IPR 2015-00514 Petitioner's Request for Rehearing; Patent 8678,190; Dated July 10, 2015,	
		"IPR 2019-00109", Exhibit 1031 - Declaration of Jennifer Tomes filed in USSN 12/647,515 dated December 7, 2012,	

PTO/SB/08a (01-10)
Approved for use through 07/31/2012. OMB 0651-0031
U.S. Patent and Trademark Office; U.S. DEPARTMENT OF COMMERCE

Under the Paperwork Reduction Act of 1995, no persons are required to respond to a collection of information unless it contains a valid OMB control number.

INFORMATION DISCLOSURE STATEMENT BY APPLICANT (Not for submission under 37 CFR 1.99)		
	Application Number	16/944,667
	Filing Date	July 31, 2020
	First Named Inventor	Jennifer E. Tomes
	Art Unit	
	Examiner Name	
	Attorney Docket Number	10055U CIP2 D1 C1C1C1C1C1

		"IPR 2019-00109", Patent No. 9,795,761; Filed October 24, 2018; Declaration of Dr. Edward Yun,	
		"IPR Decision Instituting Inter Partes Review", IPR2019-00109; Patent 9,795,761; Mailed May 6 2019,	
		"IPR Exhibit 1002", Declaration of Pliska; IPR2019-0035, Filed October 4, 2018,	
		"IPR Exhibit 1003", Declaration of Yun; IPR2019-0035; Filed October 4, 2018,	
		"IPR Exhibit 1022", Email from Medline counsel re claims constructions; IPR2019-0035; Filed October 4, 2018,	
		"IPR Petition Exhibit 1016", Excerpt from "The Design of Everyday Things"; IPR2019-0035; Filed October 4, 2018,	
		"IPR Petition Exhibit 1024", Email from Bard counsel re claims constructions; IPR2019-0035; Filed October 4, 2018,	
		"IPR0215-00513 Scheduling Order", Patent No. 8,631,935; Mailed July 15, 2015,	

Under the Paperwork Reduction Act of 1995, no persons are required to respond to a collection of information unless it contains a valid OMB control number.

INFORMATION DISCLOSURE STATEMENT BY APPLICANT (Not for submission under 37 CFR 1.99)		
	Application Number	16/944,667
	Filing Date	July 31, 2020
	First Named Inventor	Jennifer E. Tomes
	Art Unit	
	Examiner Name	
	Attorney Docket Number	10055U CIP2 D1 C1C1C1C1C1

		"IPR2015-00509 Institution Decision", IPR2015-00509; Patent Number 8,448,786; Mailed July 15, 2015; Decision Denying Institution of Inter Partes Review,	
		"IPR2015-00511 Institution Decision", IPR2015-00511; Patent 8,631,935; Entered July 15, 2015; Decision Denying Institution of Inter Partes Review,	
		"IPR2015-00513 - Request for Adverse Judgment", IPR2015-00513 - Request for Adverse Judgment; Granted - Proceedings Terminated; Patent No. 8,631,935; Entered August 11, 2015,	
		"IPR2015-00513 - Patent Owner's Request for Adverse Judgment", Patent No. 8,631,935; Mailed July 23, 2015,	
		"IPR2015-00513 Institution Decision", IPR2015-00513 Institution Decision; Patent 8,631,935; Entered July 15, 2015; Decision Institution of Inter Partes Review,	
		"IPR2015-00514 - Scheduling Order", Patent No. 8,678,190; Mailed June 26, 2015,	
		"IPR2015-00514 Decision Institution of Inter Partes Review", IPR2015-00514; Patent 8,678,190; Mailed June 26, 2015; Decision Institution of Inter Partes Review,	
		"IPR2015-00514 Judgment - Termination of Proceeding", Patent No. 8,678,190; Mailed July 24, 2015,	

Under the Paperwork Reduction Act of 1995, no persons are required to respond to a collection of information unless it contains a valid OMB control number.

INFORMATION DISCLOSURE STATEMENT BY APPLICANT (Not for submission under 37 CFR 1.99)		
	Application Number	16/944,667
	Filing Date	July 31, 2020
	First Named Inventor	Jennifer E. Tomes
	Art Unit	
	Examiner Name	
	Attorney Docket Number	10055U CIP2 D1 C1C1C1C1C1

		"IPR2019-00109", Exhibit 1026 - Bard's Opening Claim Construction Brief; Civil Action No. 1:17-cv-07216; Dated October 10, 2018; Filed October 24, 2018 as exhibit 1026,	
		"IPR2019-00109", Exhibit 1030 - Medline Industries, Inc.'s Final Infringement Contentions; Filed July 24, 2018 in Civil Action No. 1:17-cv-07216; Filed as exhibit October 24, 2018,	
		"IPR2019-00109", Patent No. 9,795,761; Filed October 24, 2018; Exhibit 1002 Declaration of Michael Plishka,	
		"Markman Decision", Medline Industries, Inc. vs. C.R. Bard, Inc.; Case No. 1:16-cv-03529\; Memorandum Opinion and Order; Judge Sharon Johnson Coleman Issued December 28, 2018,	
		"Markman Hearing", Medline Industries, Inc. vs. C.R. Bard, Inc.; Case No. 1:17-cv-07216; Memorandum Opinion and Order; Judge Sara L. Ellis; Issued January 28, 2019,	
		"Medline Catalog", Argyle Trocar Catheter Kits by Covidien; http://www.medline.com/sku/item/MDPSWD565028; Unknown Publication Date but believed to be prior to filing of present application,	
		"Medline Catalog", Argyle Turkel Safety Thoracentesis System by Covidien; 6"; http://www.medline.com/sku/item/MDPKDL5016; Unknown Publication Date but believed to be prior to filing of present application,	
		"Medline Catalog", Argyle Turkel Safety Thoracentesis System by Covidien; http://www.medline.com/sku/item/MDPKDL5014; Unknown Publication Date but believe to be prior to filing of present application,	

Under the Paperwork Reduction Act of 1995, no persons are required to respond to a collection of information unless it contains a valid OMB control number.

INFORMATION DISCLOSURE STATEMENT BY APPLICANT (Not for submission under 37 CFR 1.99)		
	Application Number	16/944,667
	Filing Date	July 31, 2020
	First Named Inventor	Jennifer E. Tomes
	Art Unit	
	Examiner Name	
	Attorney Docket Number	10055U CIP2 D1 C1C1C1C1C1

		"Medline Catalog", Paracentesis Trays by Covidien; http://www.medline.com/sku/item/MDPSWD568006; Unknown Publication Date but believed to be prior to filing of present application,	
		"Medline Catalog", Paracentesis Trays by Halyard Health; http://www.medline.com/sku/item/MDPBAA61450; Unknown Publication Date but believed to be prior to filing of present application,	
		"Medline Catalog", Safe-T Thoracentesis/Paracentesis Tray by Carefusion; http://www.medline.com/sku/item/MDPBXTTPT1000SP; Unknown publication date but believed to be prior to filing of present application,	
		"Medline Catalog", Thoracentesis Trays by Carefusion; http://www.medline.com/sku/item/MDPBXTPIG1280K; Unknown publication date but believed to be prior to filing of present application,	
		"Medline Catalog", Turkel Safety Thoracentesis Procedure Trays by Covidien; 5"; http://www.medline.com/sku/item/MDPKDL566075; Unknown Publication date but believed to be prior to present application filing date,	
		"Medline Catalog", Turkel Safety Thoracentesis Procedure Trays by Covidien; http://www.medline.com/jump/sku/x/MDPKDL566059; Unknown Publication date but believed to be prior to present application filing date,	
		"NonFinal Office Action", USSN 13/680,902; Filed April 11, 2014; Attorney Docket No. BPMDL0005JT.P2.D1; Mailed December 2, 2014,	
		"Notice of Acceptance", Australian Application No. 2011351971; Filed December 30, 2011; Attorney Docket No. BPMDL0005JT.P4.AU (10055U CIP4 AU); Mailed May 13, 2016,	

PTO/SB/08a (01-10)
Approved for use through 07/31/2012. OMB 0651-0031
U.S. Patent and Trademark Office; U.S. DEPARTMENT OF COMMERCE

Under the Paperwork Reduction Act of 1995, no persons are required to respond to a collection of information unless it contains a valid OMB control number.

INFORMATION DISCLOSURE STATEMENT BY APPLICANT (Not for submission under 37 CFR 1.99)		
	Application Number	16/944,667
	Filing Date	July 31, 2020
	First Named Inventor	Jennifer E. Tomes
	Art Unit	
	Examiner Name	
	Attorney Docket Number	10055U CIP2 D1 C1C1C1C1C1

		"Notice of Allowance", Canadian Application No. 2,705,647; Filed May 27, 2010; Attorney Docket No. 10055U CA; Mailed October 12, 2017,	
		"Notice of Allowance", Canadian Application No. 2,705,670; Attorney Docket No. 10055U CIP CA; Mailed November 3, 2017,	
		"Notice of Allowance", Chinese Application No. 201280035240.4; Reference No.10055U CIP6 CN; Mailed November 7, 2017,	
		"Office Action", Australian Application No. 2011351971; Reference No. 35204298/GP; Mailed February 18, 2016,	
		"Office Action", Chinese Application No. 201180066491.4; Mailed March 24, 2015; Attorney Docket No. BPMDL0005JT.P4 CN,	
		"Office Action", Chinese Application No. 201180066491.4; Mailed November 11, 2015; Attorney Docket No. BPMDL0005JT.P4 CN,	
		"Office Action", Chinese Application No. 201180066491.4; Mailed November 11, 2015; Attorney Docket No. BPMDL0005JT.P4.CN,	
		"Office Action", Chinese Application No. 201280035246.1; Filed May 11, 2012; Attorney Docket No. BPMDL0005JT.P5.CHIN (10055U CIP5 CN); Mailed July 15, 2016,	

Under the Paperwork Reduction Act of 1995, no persons are required to respond to a collection of information unless it contains a valid OMB control number.

INFORMATION DISCLOSURE STATEMENT BY APPLICANT (Not for submission under 37 CFR 1.99)		
	Application Number	16/944,667
	Filing Date	July 31, 2020
	First Named Inventor	Jennifer E. Tomes
	Art Unit	
	Examiner Name	
	Attorney Docket Number	10055U CIP2 D1 C1C1C1C1C1

		"Office Action", Chinese Application No. 201280035246.1; Filed May 11, 2012; Reference No. 10055U CIP5 CN; Mailed November 28, 2016,	
		"Office Action Received", Chinese App no 201280035246.1; NonFinal OA; Attorney Docket No. BPMDL005JT.P5.CN 10055U CIP5 CN; Mailed September 16, 2015,	
		"Opening Expert Report of Karl R Leinsing, MSME, PE", Civil Action No. 1:14-cv-3618; Confidential Information Redacted Pursuant to Court Order; Dated June 14, 2019,	
		"Opening Expert Report of Karl R. Leinsing, MSME, PE", Civil Action No. 1:16-cv-3529; Confidential Information Redacted Pursuant to Court Order; Dated August 1, 2019,	
		"Petition for Inter Partes Review", IPR 2019-00208; Patent No. 9,808,400; Filed November 7, 2018; Attorney Docket No. 10055U D1 C1,	
		"Petition for Inter Partes Review", IPR 2019-00223; Patent No. 9,808,596; Filed November 7, 2018; Attorney Docket No. 10055U CIP C1 C1,	
		"Publication", European Commission: Pharmaceutical Committee "A Guideline on the Readability of the Label and Package Leaflet of Medicinal Products for Human Use"; Dated September 29, 1998,	
		"Rebuttal Expert Report of Barbara Weintraub", Civil Action No. 1:14-cv-03618; Confidential Information Redacted Pursuant to Court Order; Dated July 25, 2019,	

Under the Paperwork Reduction Act of 1995, no persons are required to respond to a collection of information unless it contains a valid OMB control number.

INFORMATION DISCLOSURE STATEMENT BY APPLICANT (Not for submission under 37 CFR 1.99)		
	Application Number	16/944,667
	Filing Date	July 31, 2020
	First Named Inventor	Jennifer E. Tomes
	Art Unit	
	Examiner Name	
	Attorney Docket Number	10055U CIP2 D1 C1C1C1C1C1

		"Rebuttal Expert Report of Richard Hillstead, PH.D.", Civil Action No. 1:14-cv-3618; Confidential Information Redacted Pursuant to Court Order; Dated June 14, 2019,	
		"Second Office Action", Chinese Application No. 201280035240.4; Attorney Docket No. BPMDL0005JT.P6 CN (10055U CIP6 CN); Mailed June 23, 2016,	
		"Third Office Action", Chinese Application No. 201280035240.4; Attorney Docket No. BPMDL0005JT.P6 CN (10055U CIP6 CN); Mailed April 1, 2017,	
		"YouTube Training Video", https://www.youtube.com/w atch?v=YwqcRUP35nI&list =UUG7a6tFPh1wvF0QDM Z3DarQ ; Unknown Publication date	
		"YouTube Training Video", https://www.youtube.com/watch?v=ISBya_5cIM; Unknown Publication date	
		BYUN, SUNG C."PCT Search Report", PCT/US2011/068193; Filed December 30, 2011; Attorney Docket No. BPMDL0005JT.P4PCT; Mailed August 22, 2012,	
		BYUN, SUNG C."PCT Search Report", PCT/US2012/039311; Filed May 24, 2011; Attorney Docket No. BPMDL05JT.P6.PCT; Mailed October 25, 2012,	
		BYUN, SUNG CHEAL, "PCT Search Report and Written Opinion", PCT/US2012/037524; Filed May 11, 2012; Attorney Docket No. BPMDL05JT.P5.PCT; Mailed November 16, 2012,	

PTO/SB/08a (01-10)
Approved for use through 07/31/2012. OMB 0651-0031
U.S. Patent and Trademark Office; U.S. DEPARTMENT OF COMMERCE

Under the Paperwork Reduction Act of 1995, no persons are required to respond to a collection of information unless it contains a valid OMB control number.

INFORMATION DISCLOSURE STATEMENT BY APPLICANT (Not for submission under 37 CFR 1.99)		
	Application Number	16/944,667
	Filing Date	July 31, 2020
	First Named Inventor	Jennifer E. Tomes
	Art Unit	
	Examiner Name	
	Attorney Docket Number	10055U CIP2 D1 C1C1C1C1C1

		CAVANNA, MARK, "Ex Parte Quayle Action", USSN 29/380,474; Filed December 6, 2010; Attorney Docket No. BPMDL0006JT.C1.D3 (10056D C1 D3); Mailed August 14, 2012,	
		CAVANNA, MARK, "Final OA", USSN 29/479,600; Filed January 17, 2014; Attorney Docket No. BPMDL0006C1D3C2 10056DC1D3C2; Mailed June 1, 2017,	
		CAVANNA, MARK, "NonFinal OA", USSN 29/479,600; Filed January 17, 2014; Attorney Docket No. BPMDL6C1D3C2 10056DC1D3C2; Mailed January 3, 2018,	
		CAVANNA, MARK, "NonFinal Office Action", USSN: 29/380,474; Filed December 26, 2012; Attorney Docket No. BPMDL0006JT.C1.D3 (10056D C1 D3); Mailed March 27, 2012,	
		CAVANNA, MARK, "Non-Final Office Action", USSN 29/479,600; Filed January 17, 2014; Attorney Docket No. BPMDL0006C1D3C2 (10056D C1 D3 C2); Mailed September 26, 2016,	
		CAVANNA, MARK, "Notice of Allowance", USSN 29/338,022; Filed June 3, 2009; Attorney Docket No. BPMDL0006JT (10056D); Mailed October 1, 2009,	
		CAVANNA, MARK, "Notice of Allowance", USSN 29/362,279; Filed May 21, 2010, BPMDL006JT.C1.D1 (10056D C1 D1); Mailed September 19, 2011,	
		CAVANNA, MARK, "Notice of Allowance", USSN 29/444,526; Filed January 31, 2013; Attorney Docket No BPMDL0006JT.C1.D3.C1; Mailed October 17, 2013,	

PTO/SB/08a (01-10)
Approved for use through 07/31/2012. OMB 0651-0031
U.S. Patent and Trademark Office; U.S. DEPARTMENT OF COMMERCE

Under the Paperwork Reduction Act of 1995, no persons are required to respond to a collection of information unless it contains a valid OMB control number.

INFORMATION DISCLOSURE STATEMENT BY APPLICANT (Not for submission under 37 CFR 1.99)		
	Application Number	16/944,667
	Filing Date	July 31, 2020
	First Named Inventor	Jennifer E. Tomes
	Art Unit	
	Examiner Name	
	Attorney Docket Number	10055U CIP2 D1 C1C1C1C1C1

		EUROPEAN PATENT OFFICE, "Extended EPO Search Report", Application No. 10251024.5, In the Name of Medline Industries, Mailed October 18, 2010,	
		EUROPEAN PATENT OFFICE, "Extended EPO Search Report", EPO Application No. 10251025.2, In the Name of Medline Industries, Mailed September 29, 2010,	
		EXAMINER, CHINESE PATENT OFFICE, "First Office Action", CN Application No. 201020219785.9; Mailed November 18, 2010; Attorney Docket No.10055U CIP.CN; Filed June 3, 2010,	
		GILLIGAN, C. LUKE, "Notice of Allowance", USSN 13/153,265; Filed June 3, 2011; Attorney Docket No. BPMDL0005JT.P5 (10055U CIP5); Mailed June 15, 2017,	
		GIMENEZ BURGOS, R, "European Examination Report", European Application No. 11 854 003.8-1659; Ref SJG/P128064EP00; Attorney Docket No. BPMDL0005JT.P4.EPO (10055U CIP4 EP); Mailed January 22, 2015,	
		GIMENEZ BURGOS, R, "Extended European Search Report", 11854003.8; Filed December 30, 2011; Attorney Docket No. SJG/P128064EP00; Mailed June 3, 2014,	
		GIMENEZ BURGOS, R, "Extended European Search Report", EPO App No. 12 79 3939; Reference No. SJG/P130269EP00; Attorney Docket No. 10055U CIP5 EP; Mailed January 27, 2015,	
		GIMENEZ BURGOS, R, "Extended European Search Report", EU App No. 12792423.1-1659/2713933; PCT/US2012039311; Reference No. SJG/P130270EP00; Attorney Docket No. 10055U CIP6 EP; Mailed January 27, 2015,	

Under the Paperwork Reduction Act of 1995, no persons are required to respond to a collection of information unless it contains a valid OMB control number.

INFORMATION DISCLOSURE STATEMENT BY APPLICANT (Not for submission under 37 CFR 1.99)		
	Application Number	16/944,667
	Filing Date	July 31, 2020
	First Named Inventor	Jennifer E. Tomes
	Art Unit	
	Examiner Name	
	Attorney Docket Number	10055U CIP2 D1 C1C1C1C1C1

		HAND, MELANIE J., "Final OA", USS 12/785,064; Filed May 21, 2010; Attorney Docket No. BPMDL0018RL (10212U); Mailed June 5, 2013,	
		HAND, MELANIE J., "NonFinal OA", USSN 12/785,064; Filed May 21, 2010; Attorney Docket No. BPMDL0018RL (10212U); Mailed February 1, 2013,	
		HAND, MELANIE J., "NonFinal OA", USSN 13/115,053; Filed June 7, 2011; Attorney Docket No. BPMDL005JT.P3; Mailed May 9, 2013,	
		HAND, MELANIE J., "NonFinal OA", USSN 13/155,026; Filed June 7, 2011; Attorney Docket No. BPMDL0005JT.P2 (10055U CIP2); Mailed November 30, 2012,	
		HAND, MELANIE J., "NonFinal OA", USSN 13/860,902; Filed April 11, 2013; Attorney Docket No. BPMDL0005JT.P2.D1 (10055U CIP2 D1); Mailed April 1, 2016,	
		HAND, MELANIE J., "NonFinal OA", USSN 14/165,044; Filed January 27, 2014; Attorney Docket No. BPMDL0005JTP3C1 (10055UCIP3C1); Mailed October 26, 2015,	
		HAND, MELANIE J., "Notice of Allowance", USSN 13/155,026; Filed June 7, 2011; Attorney Docket No. BPMDL0005JT.P2 (10055U CIP2); Mailed February 1, 2013,	
		HAND, MELANIE J., "Notice of Allowance", USSN 13/155,054; Filed June 7, 2011; Attorney Docket No. BPMDL0005JT.P3 (10055U CIP3); Mailed October 28, 2013,	

PTO/SB/08a (01-10)
Approved for use through 07/31/2012. OMB 0651-0031
U.S. Patent and Trademark Office; U.S. DEPARTMENT OF COMMERCE

Under the Paperwork Reduction Act of 1995, no persons are required to respond to a collection of information unless it contains a valid OMB control number.

INFORMATION DISCLOSURE STATEMENT BY APPLICANT (Not for submission under 37 CFR 1.99)		
	Application Number	16/944,667
	Filing Date	July 31, 2020
	First Named Inventor	Jennifer E. Tomes
	Art Unit	
	Examiner Name	
	Attorney Docket Number	10055U CIP2 D1 C1C1C1C1C1

		HAND, MELANIE J., "Notice of Allowance", USSN 13/860, 902; Filed April 11, 2013; Attorney Docket No. BPMDL0005JT.P2.D1 (10055U CIP2 D1); Mailed August 4, 2015,	
		HAND, MELANIE JO, "Appeal Decision", USSN 12/785,064; Filed May 21, 2010; Attorney Docket No. BPMDL0018RL (10212U); Mailed May 18, 2016,	
		HAND, MELANIE JO, "Final OA", USSN 13/860,902; Filed April 11, 2013; Attorney Docket No. BPMDL0005JT.P2.D1 (10055U CIP2 D1); Mailed May 22, 2015,	
		KLEIN, BENJAMIN J., "NonFinal OA", USSN 15/5051,964; Filed February 24, 2016; Attorney Docket No. BPMDL0005JT CIP C2 10055U CIP C2; Mailed January 7, 2019,	
		KLEIN, BENJAMIN JACOB, "Notice of Allowance", USSN 15/051,964; Filed February 24, 2016; Attorney Docket No. BPMDL0005JT.P1.C2 (10055U CIP C2); Mailed August 21, 2019,	
		LAWRENCE, SAMANTHA Q., "Notice of Allowance", USSN 29/479,600; Filed January 17, 2014; Attorney Docket No. BPMDL6C1D3C2 10056DC1D3C2; Mailed April 25, 2019,	
		LONG, FONYA M, "Appeal Decision", USSN 13/154,265; Filed June 3, 2011; Attorney Docket No. BPMDL0005JT.P5 (10055U CIP5); Mailed October 6, 2016,	
		MACKENZIE, KRISTIAN, "Office Action", Canadian Application No. 2,705,647; Ref No. 15486-P37235CA00 10055U CA; Mailed February 10, 2017,	

PTO/SB/08a (01-10)
Approved for use through 07/31/2012. OMB 0651-0031
U.S. Patent and Trademark Office; U.S. DEPARTMENT OF COMMERCE

Under the Paperwork Reduction Act of 1995, no persons are required to respond to a collection of information unless it contains a valid OMB control number.

INFORMATION DISCLOSURE STATEMENT BY APPLICANT (Not for submission under 37 CFR 1.99)		
	Application Number	16/944,667
	Filing Date	July 31, 2020
	First Named Inventor	Jennifer E. Tomes
	Art Unit	
	Examiner Name	
	Attorney Docket Number	10055U CIP2 D1 C1C1C1C1C1

		MACKENZIE, KRISTIAN, "Office Action", Canadian Application No. 2,705,647; Ref Number 15468-P37235CA00; Attorney Docket No. BPMDL0005JT.CAN (10055U CA); Mailed April 21, 2016,	
		MACKENZIE, KRISTIAN, "Office Action", Canadian Application No. 2,705,670; Attorney Ref No. 15468-P37238CA00; 10055U CIP CA; Mailed February 10, 2017,	
		MACKENZIE, KRISTIAN, "Office Action", Canadian Application No. 2,705,670; Ref No. 15468-8; Attorney Docket No. BPMDL0005JT CIP CA (10055U CIP CA); Mailed April 25, 2016,	
		MARCETICH, ADAM, "Non-Final OA", USSN 15/640,224; Filed June 30, 2017; Attorney Docket No. 10055U CIP3 C1 C1; Mailed July 10, 2019,	
		MARCETICH, ADAM, "NonFinal Office Action", USSN 15/684,787; Filed August 23, 2017; Attorney Docket No. 10055U CIP2 D1 C1 C1; Mailed November 4, 2019,	
		MARCETICH, ADAM, "Notice of Allowance", USSN 13/860,902; Filed April 11, 2013; Attorney Docket No. BPMDL0005JT.P2.D1 (10055U CIP2 D1); Mailed November 8, 2016,	
		MARCETICH, ADAM, "Notice of Allowance", USSN 13/860,902; Filed April 11, 2013; Attorney Docket No. BPMDL0005JT.P2.D1 (10055U CIP2 D1); Mailed September 14, 2016,	
		MARCETICH, ADAM, "Notice of Allowance", USSN 14/165,044; Filed January 27, 2014; Attorney Docket No. BPMDL0005JT.P3.C1 (10055U CIP3 C1); Mailed February 28, 2017,	

PTO/SB/08a (01-10)
Approved for use through 07/31/2012. OMB 0651-0031
U.S. Patent and Trademark Office; U.S. DEPARTMENT OF COMMERCE

Under the Paperwork Reduction Act of 1995, no persons are required to respond to a collection of information unless it contains a valid OMB control number.

INFORMATION DISCLOSURE STATEMENT BY APPLICANT (Not for submission under 37 CFR 1.99)		
	Application Number	16/944,667
	Filing Date	July 31, 2020
	First Named Inventor	Jennifer E. Tomes
	Art Unit	
	Examiner Name	
	Attorney Docket Number	10055U CIP2 D1 C1C1C1C1C1

		MARCETICH, ADAM, "Notice of Allowance", USSN 14/793,455; Filed July 7, 2015; Attorney Docket No. BPMDL 10055UCIP2D1C1; Mailed July 20, 2017,	
		MARCETICH, ADAM M., "Final OA", USSN 14/165,044; Filed January 27, 2014; Attorney Docket No. BPMDL0005JT.CIP3.C1 (10055U CIP3 C1); Mailed August 11, 2016,	
		MARCETICH, ADAM M., "Notice of Allowance", USSN 15/640,224; Filed June 30, 2017; Attorney Docket No. 10055U CIP3 C1 C1; Mailed November 21, 2019,	
		MARCITECH, ADAM, "NonFinal OA", USSN 14/793,455; Filed July 7, 2015; Attorney Docket No. BPMDL10055UCIP2D1C1; Mailed May 3, 2017,	
		MEDLINE, "Medline Article/Brochure", Published 2008.	
		MIAN, ALI, "Non-Final Office Action", Canadian Application No. 2,837,324; Attorney Docket No. 15468-P45287CA00 (10055U CIP6 CA); Mailed October 3, 2018,	
		MIAN, ALI, "Office Action", Canadian Application No. 2,837,324; Reference No. 10055U CIP6 CA; Mailed September 3, 2019,	
		ORTEGA, RAFAEL et al., "Female Urethral Catheterization", N. Engl. J. Med Vol 358:e15; published 2008,	

Under the Paperwork Reduction Act of 1995, no persons are required to respond to a collection of information unless it contains a valid OMB control number.

INFORMATION DISCLOSURE STATEMENT BY APPLICANT (Not for submission under 37 CFR 1.99)		
	Application Number	16/944,667
	Filing Date	July 31, 2020
	First Named Inventor	Jennifer E. Tomes
	Art Unit	
	Examiner Name	
	Attorney Docket Number	10055U CIP2 D1 C1C1C1C1C1

		PASS, NATALIE, "Final OA", USSN 13/153,265; Filed June 3, 2011; Attorney Docket No. BPMDL0005JT.P5 (10055U CIP5); Mailed July 12, 2013,	
		PASS, NATALIE, "NonFinal OA", USSN 13/153,265; Filed June 3, 2011; Attorney Docket No. BPMDL0005JT.P5 (10055U CIP5); Mailed March 5, 2013,	
		POON, ROBERT, "Appeal Decision", USSN 12/647,515; Filed December 27, 2009; Attorney Docket No. BPMDL0005JT.P1 (10055U CIP); Mailed January 19, 2018,	
		POON, ROBERT, "Appeal Decision", USSN 13/153,300; Filed June 3, 2011; Attorney Docket No. BPMDL0005JT.P6 (10055U CIP6); Mailed October 12, 2016,	
		POON, ROBERT, "Appeal Decision", USSN 13/374,509; Filed December 30, 2011; Attorney Docket No. BPMDL0005JT.P4 (10055U CIP4); Mailed October 24, 2016,	
		POON, ROBERT, "Appeal Decision", USSN 14/265,920; Filed April 30, 2014; Attorney Docket No. BPMDL0005JT.D1.C2 10055U D1 C2; Mailed August 1, 2018,	
		POON, ROBERT, "Final OA", USSN 12/647,515; Filed December 27, 2009; Attorney Docket No. BPMDL0005JT.P1 (10055U CIP); Mailed April 7, 2015,	
		POON, ROBERT, "Final OA", USSN 12/647,515; Filed December 27, 2009; Attorney Docket No. BPMDL0005JT.P1 (10055U CIP); Mailed May 13, 2013,	

PTO/SB/08a (01-10)
Approved for use through 07/31/2012. OMB 0651-0031
U.S. Patent and Trademark Office; U.S. DEPARTMENT OF COMMERCE

Under the Paperwork Reduction Act of 1995, no persons are required to respond to a collection of information unless it contains a valid OMB control number.

INFORMATION DISCLOSURE STATEMENT BY APPLICANT (Not for submission under 37 CFR 1.99)		
	Application Number	16/944,667
	Filing Date	July 31, 2020
	First Named Inventor	Jennifer E. Tomes
	Art Unit	
	Examiner Name	
	Attorney Docket Number	10055U CIP2 D1 C1C1C1C1C1

		POON, ROBERT, "Final OA", USSN 12/846,675; Filed July 29, 2010; Attorney Docket No. BPMDL0005JT.D1; Mailed December 18, 2013,	
		POON, ROBERT, "Final OA", USSN 13/153,300; Filed June 3, 2011; Attorney Docket No. BPMDL0005JT.P6 (10055U CIP6); Mailed August 6, 2013,	
		POON, ROBERT, "Final OA", USSN 13/374,509; Filed December 30, 2011; Attorney Docket No. BPMDL0005JT.P4 (10055U CIP4); Mailed August 6, 2013,	
		POON, ROBERT, "Final OA", USSN 14/265,909; Filed April 30, 2014; Attorney Docket No. BPMDL0005JT.D1.C1 (10055U D1 C1); Mailed January 10, 2017,	
		POON, ROBERT, "Final OA", USSN 14/265,909; Filed April 30, 2015; Attorney Docket No. BPMDL0005JT.D1.C1 (10055U D1 C1); Mailed October 5, 2015,	
		POON, ROBERT, "Final OA", USSN 14/265,920; Filed April 30, 2014; Attorney Docket No. BPMDL0005JT.D1.C2 (10055U D1 C2); Mailed October 2, 2015,	
		POON, ROBERT, "Final OA", USSN 14/718,792; Filed May 21, 2015; Attorney Docket No. BPMDL0005JT.P1.C1 (10055U CIP C1); Mailed January 5, 2016,	
		POON, ROBERT, "Final OA", USSN 15/067,903; Filed March 11, 2016; Attorney Docket No. MDL5JTP1C1C1 10055UP1C1C1; Mailed January 13, 2017,	

PTO/SB/08a (01-10)
Approved for use through 07/31/2012. OMB 0651-0031
U.S. Patent and Trademark Office; U.S. DEPARTMENT OF COMMERCE

Under the Paperwork Reduction Act of 1995, no persons are required to respond to a collection of information unless it contains a valid OMB control number.

INFORMATION DISCLOSURE STATEMENT BY APPLICANT (Not for submission under 37 CFR 1.99)		
	Application Number	16/944,667
	Filing Date	July 31, 2020
	First Named Inventor	Jennifer E. Tomes
	Art Unit	
	Examiner Name	
	Attorney Docket Number	10055U CIP2 D1 C1C1C1C1C1

		POON, ROBERT, "Final Office Action", USSN 12/495,148, Filed June 30, 2009, Attorney Docket No. BPMDL0005JT (10055U), Art Unit 3788, Mailed March 3, 2011,	
		POON, ROBERT, "Final Office Action", USSN 12/495,148; Filed June 30, 2009; Attorney Docket No. BPMDL0005JT (10055U); Mailed July 31, 2013,	
		POON, ROBERT, "Final Office Action", USSN 12/846,675; Filed July 29, 2010; Attorney Docket No. BPMDL0005JT.D1 (10055U D1); Mailed September 26, 2012,	
		POON, ROBERT, "Final Office Action", USSN 14/718,912; Filed May 21, 2015; Attorney Docket No. BPMDL5JTP1C1 (10055UP1C1); Mailed January 5, 2016,	
		POON, ROBERT, "Final Office Action", USSN 15/703,514; Filed September 13, 2017; Attorney Docket No. 1037-002-09US; Mailed May 2, 2019,	
		POON, ROBERT, "Final Office Action", USSN 15/703,514; Mailed May 2, 2019,	
		POON, ROBERT, "Final Office Action", USSN 15/803,383; Filed November 3, 2017; Attorney Docket No. 1037-002-08-US; Mailed July 25, 2019,	
		POON, ROBERT, "Final Office Action", USSN 15/804,520; Filed November 6, 2017; Attorney Docket No. 1037-001-02US; Mailed August 8, 2019,	

PTO/SB/08a (01-10)
Approved for use through 07/31/2012. OMB 0651-0031
U.S. Patent and Trademark Office; U.S. DEPARTMENT OF COMMERCE

Under the Paperwork Reduction Act of 1995, no persons are required to respond to a collection of information unless it contains a valid OMB control number.

INFORMATION DISCLOSURE STATEMENT BY APPLICANT (Not for submission under 37 CFR 1.99)		
	Application Number	16/944,667
	Filing Date	July 31, 2020
	First Named Inventor	Jennifer E. Tomes
	Art Unit	
	Examiner Name	
	Attorney Docket Number	10055U CIP2 D1 C1C1C1C1C1

		POON, ROBERT, "NonFinal OA", USSN 12/495,148; Filed June 30, 2009; Attorney Docket No. BPMDL0005JT (10055U); Mailed October 4, 2012,	
		POON, ROBERT, "NonFinal OA", USSN 12/647,515; Filed December 27, 2009; Attorney Docket No. BPMDL0005JT.P1 (10055U CIP); Mailed December 18, 2013,	
		POON, ROBERT, "NonFinal OA", USSN 12/846,675; Filed July 29, 2010; Attorney Docket No. BPMDL0005JT.D1 (10055U D1); Mailed September 10, 2013,	
		POON, ROBERT, "NonFinal OA", USSN 14/265,909; Filed April 30, 2014; Attorney Docket No. BPMDL0005JT.D1.C1 (10055U D1 C1); Mailed September 12, 2016,	
		POON, ROBERT, "NonFinal OA", USSN 14/265,909; Filed April 30, 2014; Attorney Docket No. BPMDL5JT.D1.C1 (10055UD1C1); Mailed December 31, 2014,	
		POON, ROBERT, "NonFinal OA", USSN 14/265,920; Filed April 30, 2014; Attorney Docket No. BPMDL0005JT.D1.C2 (10055U D1 C2); Mailed December 30, 2014,	
		POON, ROBERT, "NonFinal OA", USSN 14/718,792; Filed May 21, 2015; Attorney Docket No. BPMDL5JTP1C1 10055UP1C1; Mailed November 19, 2015,	
		POON, ROBERT, "NonFinal OA", USSN 15/067,903; Filed March 11, 2016; Attorney Docket No. BPMDL5JTP1C1C1 10055UP1C1C1; Mailed June 30, 2016,	

PTO/SB/08a (01-10)
Approved for use through 07/31/2012. OMB 0651-0031
U.S. Patent and Trademark Office; U.S. DEPARTMENT OF COMMERCE

Under the Paperwork Reduction Act of 1995, no persons are required to respond to a collection of information unless it contains a valid OMB control number.

INFORMATION DISCLOSURE STATEMENT BY APPLICANT (Not for submission under 37 CFR 1.99)		
	Application Number	16/944,667
	Filing Date	July 31, 2020
	First Named Inventor	Jennifer E. Tomes
	Art Unit	
	Examiner Name	
	Attorney Docket Number	10055U CIP2 D1 C1C1C1C1C1

		POON, ROBERT, "NonFinal OA", USSN 15/803,383; Filed November 3, 2017; Attorney Docket No. BPMDL 10055UCIP2D1C1C1C1; Mailed March 7, 2018,	
		POON, ROBERT, "NonFinal OA", USSN 15/804,520; Filed November 6, 2017; Attorney Docket No. 1037-001-02-US; Mailed January 19, 2018,	
		POON, ROBERT, "Non-Final OA", USSN 14/265,909; Fled April 30, 2014; Attorney Docket No. 1037-001-00US; Mailed August 24, 2017,	
		POON, ROBERT, "NonFinal Office Action", 15/703,514; Filed September 13, 2017; Attorney Docket No. BPMDL5JTP5C1 10055UCIP5C1; Mailed June 22, 2018,	
		POON, ROBERT, "NonFinal Office Action", USSN 12/647,515; Filed December 27, 2009; Attorney Docket No. BPMDL0005JT.P1 (10055U CIP); Mailed June 28, 2012,	
		POON, ROBERT, "NonFinal Office Action", USSN 12/846,675; Filed July 29, 2010; Attorney Docket No. BPMDL0005JT.D1 (10055U.D1); Mailed December 22, 2011,	
		POON, ROBERT, "NonFinal Office Action", USSN 13/153,300; Filed June 3, 2011; Attorney Docket No. BPMDL0005JT CIP6 (10055U CIP6); Mailed October 1, 2012,	
		POON, ROBERT, "NonFinal Office Action", USSN 13/374,509; Filed December 30, 2011; Attorney Docket No. BPMDL005JT.P4 (10055UCIP4); Mailed October 2, 2012,	

PTO/SB/08a (01-10)
Approved for use through 07/31/2012. OMB 0651-0031
U.S. Patent and Trademark Office; U.S. DEPARTMENT OF COMMERCE

Under the Paperwork Reduction Act of 1995, no persons are required to respond to a collection of information unless it contains a valid OMB control number.

INFORMATION DISCLOSURE STATEMENT BY APPLICANT (Not for submission under 37 CFR 1.99)		
	Application Number	16/944,667
	Filing Date	July 31, 2020
	First Named Inventor	Jennifer E. Tomes
	Art Unit	
	Examiner Name	
	Attorney Docket Number	10055U CIP2 D1 C1C1C1C1C1

		POON, ROBERT, "NonFinal Office Action", USSN 15/804,520; Filed November 6, 2017; Attorney Docket No. 1037-001-02US; Mailed June 6, 2018,	
		POON, ROBERT, "NonFinal Office Action", USSN 16/258,231; Filed January 25, 2019; Attorney Docket No. 10055U D1 C2 C1; Mailed October 2, 2019,	
		POON, ROBERT, "Non-Final Office Action", USSN 12/495,148; filed 06/30/2009; first inventor: Jennifer E. Tomes; attorney docket number: BPMDL0005JT (10055U); art unit: 3728; mailed: 08/04/2010,	
		POON, ROBERT, "Non-Final Office Action", USSN 15/803,393; Filed November 3, 2017; Attorney Docket No. 1037-002-08US Mailed October 15, 2018,	
		POON, ROBERT, "Non-Final Office Action", USSN 15/804,520; Filed November 6, 2017; Attorney Docket No. 1037-001-02US; Mailed November 2, 2018,	
		POON, ROBERT, "Notice of Allowance", USSN 12/495,148; Filed June 30, 2009; Attorney Docket No. BPMDL0005JT (10055U); Mailed November 20, 2013,	
		POON, ROBERT, "Notice of Allowance", USSN 12846675; Filed July 29, 2010; Attorney Docket No. BPMDL0005JT.D1 (10055U D1); Mailed April 30, 2014,	
		POON, ROBERT, "Notice of Allowance", USSN 14/265,920; Filed April 30, 2014; Attorney Docket No. BPMDL0005JT.D1.C2 (10055U D1 C2); Mailed November 28, 2018,	

PTO/SB/08a (01-10)
Approved for use through 07/31/2012. OMB 0651-0031
U.S. Patent and Trademark Office; U.S. DEPARTMENT OF COMMERCE

Under the Paperwork Reduction Act of 1995, no persons are required to respond to a collection of information unless it contains a valid OMB control number.

INFORMATION DISCLOSURE STATEMENT BY APPLICANT (Not for submission under 37 CFR 1.99)		
	Application Number	16/944,667
	Filing Date	July 31, 2020
	First Named Inventor	Jennifer E. Tomes
	Art Unit	
	Examiner Name	
	Attorney Docket Number	10055U CIP2 D1 C1C1C1C1C1

		POON, ROBERT, "Notice of Allowance", USSN 14/718,792; Filed May 21, 2015; Attorney Docket No. BPMDL0005JT.CIP.C1 (10055U CIP C1); Mailed February 2, 2016,	
		POON, ROBERT, "Notice of Allowance", USSN 14265,909; Filed April 30, 2014; Attorney Docket No. 1037-001-00US; Mailed October 2, 2017,	
		POON, ROBERT, "Notice of allowance", USSN 15/067,903; Filed March 11, 2016; Attorney Docket No. 1037-001-01US; Mailed August 23, 2017,	
		POON, ROBERT, "Restriction Requirement", USSN 12/647,515; Filed December 27, 2009; Attorney Docket No. BPMDL0005JT.P1 (10055U CIP); Mailed May 23, 2012,	
		POTHIER, ANDREW, "NonFinal OA", Canadian Application No. 2,837,289; Attorney Docket No. 10055U CIP5 CA; Mailed February 14, 2018,	
		POTHIER, ANDREW, "NonFinal Office Action", Canadian Patent Application No. 2,822,905; Reference No. 15468-P44352CA00 (10055U CIP4 CA); Mailed August 31, 2018,	
		POTHIER, ANDREW, "Non-Final Office Action", Canadian Application No. 2,837,289; Mailed June 27, 2019,	
		POTHIER, ANDREW, "Non-Final Office Action", Canadian Application No.: 2,822,905; File No. 15468-P44352CA00; Mailed December 18, 2017,	

Under the Paperwork Reduction Act of 1995, no persons are required to respond to a collection of information unless it contains a valid OMB control number.

INFORMATION DISCLOSURE STATEMENT BY APPLICANT (Not for submission under 37 CFR 1.99)		
	Application Number	16/944,667
	Filing Date	July 31, 2020
	First Named Inventor	Jennifer E. Tomes
	Art Unit	
	Examiner Name	
	Attorney Docket Number	10055U CIP2 D1 C1C1C1C1C1

		POTHIER, ANDREW, "Office Action", Canadian Application No. 2,822,905; Attorney Docket No. 10055U CIP4 CA; Mailed June 13, 2019,	
		POTHIER, ANDREW, "Office Action", Canadian Application No. 2,822,905; Reference No. 15468-P44352CA00; Mailed May 1, 2017,	
		POTHIER, ANDREW, "Office Action", Canadian Application NO. 2,837,289; Dated October 29, 2018,	
		POWER, "Postoperative behavior changes and pain in children, 2 to 12 years, following inpatient and day case surgery", University College London; http://discovery.ucl.ac.uk/643438/1/643438.pdf, August 2010,	
		PRANGE, SHARON M., "Response to First Office Action", USSN 12/004,796, Filed December 21, 2007; Attorney Docket No. 213786-00044USPI; Mailed October 28, 2009,	
		SCHULTZ, OTTMAR, "Extended European Search Report", EP Application NO. 16177903.8 - 1501; Filed June 30, 2009; Attorney Docket No. 10055U EP D1; Mailed October 27, 2016,	
		THOMSEN, TODD, "Male Urethral Catheterization", N. Engl. J. Med Vol. 354:e22; Published 2006,	
		VAN POELGEEST, A, "Exam Report", EP Application No. 12792423.1; Mailed September 17, 2019,	

Under the Paperwork Reduction Act of 1995, no persons are required to respond to a collection of information unless it contains a valid OMB control number.

INFORMATION DISCLOSURE STATEMENT BY APPLICANT (Not for submission under 37 CFR 1.99)		
	Application Number	16/944,667
	Filing Date	July 31, 2020
	First Named Inventor	Jennifer E. Tomes
	Art Unit	
	Examiner Name	
	Attorney Docket Number	10055U CIP2 D1 C1C1C1C1C1

		VAN POELGEEST, A, "Exam Report", European Application No. 12793939.5; Attorney Reference 10055U CIP5 EP; Mailed October 7, 2019,	
		VAN POELGEEST, A, "Examination Report", EP Application No. 11 854 003.8-1113; September 17, 2019,	
		VASAT, PETER, "NonFinal OA", USSN 12/785,064; Filed May 21, 2010; Attorney Docket No. BPMDL0018RL (10212U); Mailed February 9, 2018,	
		VASAT, PETER, "Notice of Allowance", USSN 12/785,064; Filed May 21, 2010; Attorney Docket No. BPMDL0018RL (10212U); Mailed September 12, 2016,	
		YUAN, MINQIANG, "Non-Final Office Action", Chinese Application No. 200920267201.2, Mailed September 9, 2010.	
		YUAN, MINQUIANG, "Non-Final Office Action", Chinese Application No. 200920267201.2, Attorney Docket No. BPMDL0005JT.CHIN (10055U.CN); Mailed June 4, 2010.	
		ZEEV, et al., "Family-centered Preparation for Surgery Improves Perioperative Outcomes in Children: A randomized Controlled Trial"", Anesthesiology, 106, Pages 65-74; https://anesthesiology.pubs.asahq.org/article.aspx?articleid=1922803 ; January 2007,	
		LAWRENCE, SAMANTHA , "Notice of Allowance", USSN 29/479,600; Filed January 17, 2014; Attorney Docket No. BPMDL6C1D3C2 10056DC1D3C2; Mailed February 24, 2020,	

Under the Paperwork Reduction Act of 1995, no persons are required to respond to a collection of information unless it contains a valid OMB control number.

INFORMATION DISCLOSURE STATEMENT BY APPLICANT (Not for submission under 37 CFR 1.99)		
	Application Number	16/944,667
	Filing Date	July 31, 2020
	First Named Inventor	Jennifer E. Tomes
	Art Unit	
	Examiner Name	
	Attorney Docket Number	10055U CIP2 D1 C1C1C1C1C1

		MARCETICH, ADAM , "Notice of Allowance", USSN 15/684,787; Filed August 23, 2017; Attorney Docket No. BPMDL 10055UCIP2D1C1C1; Mailed February 27, 2020,	
		POON, ROBERT , "NonFinal Office Action", USSN 15/703,514; Filed September 13, 2017; Attorney Docket No. 1037-002-09US; Mailed March 17, 2020,	
		POON, ROBERT , "Non-Final Office Action", USSN 15/803,383; Filed November 3, 2017; Attorney Docket No. 1037-002-08US; mailed March 16, 2020,	
		"Final Written Decision", IPR 2019-00109; Mailed May 4, 2020; Patent No. 9,795,761,	
		"Final Written Decision", IPR 2019-00208; Patent No. 9,808,400; Entered June 3, 2020; Docket No. 10055U D1 C1,	
		"Final Written Decision", IPR 2019-00223; Patent No. 9,808,596; Entered June 3, 2020; 10055U CIP C1 C1,	
		POTHIER, ANDREW , "Office Action", Canadian Application No. 2,837,289; Mailed February 27, 2020,	
		POTHIER, ANDREW , "Office Action", Canadian Application No. 2822905; Mailed February 27, 2020,	

PTO/SB/08a (01-10)
Approved for use through 07/31/2012. OMB 0651-0031
U.S. Patent and Trademark Office; U.S. DEPARTMENT OF COMMERCE

Under the Paperwork Reduction Act of 1995, no persons are required to respond to a collection of information unless it contains a valid OMB control number.

INFORMATION DISCLOSURE STATEMENT BY APPLICANT (Not for submission under 37 CFR 1.99)		
	Application Number	16/944,667
	Filing Date	July 31, 2020
	First Named Inventor	Jennifer E. Tomes
	Art Unit	
	Examiner Name	
	Attorney Docket Number	10055U CIP2 D1 C1C1C1C1C1

		"Final Written Decision", IPR 2019-00035; Patent No. 9,745,008; Entered April 8, 2020; Docket No. 10055U CIP2 D1 C1,	
		"Final Written Decision", IPR 2019-00036; Patent No. 9,745,008; Entered April 8, 2020; Docket No. 10055U CIP2 D1 C1,	

EXAMINER SIGNATURE

Examiner Signature		Date Considered	

*EXAMINER: Initial if reference considered, whether or not citation is in conformance with MPEP 609. Draw line through a citation if not in conformance and not considered. Include copy of this form with next communication to applicant.

[1] See Kind Codes of USPTO Patent Documents at www.USPTO.GOV or MPEP 901.04. [2] Enter office that issued the document, by the two-letter code (WIPO Standard ST.3). [3] For Japanese patent documents, the indication of the year of the reign of the Emperor must precede the serial number of the patent document.
[4] Kind of document by the appropriate symbols as indicated on the document under WIPO Standard ST.16 if possible. [5] Applicant is to place a check mark here if English language translation is attached.

Doc Code: PA..
Document Description: Power of Attorney

PTO/AIA/82A (07-13)
Approved for use through 11/30/2014. OMB 0651-0051
U.S. Patent and Trademark Office; U.S. DEPARTMENT OF COMMERCE
Under the Paperwork Reduction Act of 1995, no persons are required to respond to a collection of information unless it displays a valid OMB control number.

TRANSMITTAL FOR POWER OF ATTORNEY TO ONE OR MORE REGISTERED PRACTITIONERS

NOTE: This form is to be submitted with the Power of Attorney by Applicant form (PTO/AIA/82B) to identify the application to which the Power of Attorney is directed, in accordance with 37 CFR 1.5, unless the application number and filing date are identified in the Power of Attorney by Applicant form. If neither form PTO/AIA/82A nor form PTO/AIA82B identifies the application to which the Power of Attorney is directed, the Power of Attorney will not be recognized in the application.

Application Number	16944667
Filing Date	July 31, 2020
First Named Inventor	Jennifer Tomes
Title	Catheter Tray, Packaging System, Instruction Insert, and Associated Methods
Art Unit	
Examiner Name	
Attorney Docket Number	10055UCIP2D1C1C1C1C1C1

SIGNATURE of Applicant or Patent Practitioner

Signature	/Philip H. Burrus, IV/	Date (Optional)	2020-08-04
Name	Philip H. Burrus, IV	Registration Number	45432
Title (if Applicant is a juristic entity)			
Applicant Name (if Applicant is a juristic entity)			

NOTE: This form must be signed in accordance with 37 CFR 1.33. See 37 CFR 1.4(d) for signature requirements and certifications. If more than one applicant, use multiple forms.

☐ *Total of _____ forms are submitted.

This collection of information is required by 37 CFR 1.131, 1.32, and 1.33. The information is required to obtain or retain a benefit by the public which is to file (and by the USPTO to process) an application. Confidentiality is governed by 35 U.S.C. 122 and 37 CFR 1.11 and 1.14. This collection is estimated to take 3 minutes to complete, including gathering, preparing, and submitting the completed application form to the USPTO. Time will vary depending upon the individual case. Any comments on the amount of time you require to complete this form and/or suggestions for reducing this burden, should be sent to the Chief Information Officer, U.S. Patent and Trademark Office, U.S. Department of Commerce, P.O. Box 1450, Alexandria, VA 22313-1450. DO NOT SEND FEES OR COMPLETED FORMS TO THIS ADDRESS. **SEND TO: Commissioner for Patents, P.O. Box 1450, Alexandria, VA 22313-1450.**

If you need assistance in completing the form, call 1-800-PTO-9199 and select option 2.

Doc Code: PA..
Document Description: Power of Attorney

PTO/AIA/82B (07-13)
Approved for use through 11/30/2014. OMB 0651-0031
U.S. Patent and Trademark Office; U.S. DEPARTMENT OF COMMERCE
Under the Paperwork Reduction Act of 1995, no persons are required to respond to a collection of information unless it displays a valid OMB control number

Bard Exhibit 1004.0199

POWER OF ATTORNEY BY APPLICANT

I hereby revoke all previous powers of attorney given in the application identified in either the attached transmittal letter or the boxes below.

Application Number	Filing Date

(Note: The boxes above may be left blank if information is provided on form PTO/AIA/82A.)

☑ I hereby appoint the Patent Practitioner(s) associated with the following Customer Number as my/our attorney(s) or agent(s), and to transact all business in the United States Patent and Trademark Office connected therewith for the application referenced in the attached transmittal letter (form PTO/AIA/82A) or identified above: 27939

OR

☐ I hereby appoint Practitioner(s) named in the attached list (form PTO/AIA/82C) as my/our attorney(s) or agent(s), and to transact all business in the United States Patent and Trademark Office connected therewith for the patent application referenced in the attached transmittal letter (form PTO/AIA/82A) or identified above. (Note: Complete form PTO/AIA/82C.)

Please recognize or change the correspondence address for the application identified in the attached transmittal letter or the boxes above to:

☑ The address associated with the above-mentioned Customer Number

OR

☐ The address associated with Customer Number:

OR

Firm or Individual Name					
Address					
City		State		Zip	
Country					
Telephone		Email			

I am the Applicant (if the Applicant is a juristic entity, list the Applicant name in the box):

Medline Industries, Inc.

☐ Inventor or Joint Inventor (title not required below)

☐ Legal Representative of a Deceased or Legally Incapacitated Inventor (title not required below)

☑ Assignee or Person to Whom the Inventor is Under an Obligation to Assign (provide signer's title if applicant is a juristic entity)

☐ Person Who Otherwise Shows Sufficient Proprietary Interest (e.g., a petition under 37 CFR 1.46(b)(2) was granted in the application or is concurrently being filed with this document) (provide signer's title if applicant is a juristic entity)

SIGNATURE of Applicant for Patent

The undersigned (whose title is supplied below) is authorized to act on behalf of the applicant (e.g., where the applicant is a juristic entity).

Signature	David S. Noskowicz	Date (Optional)	17 MAR 2014
Name	David S. Noskowicz		
Title	Senior Patent Counsel		

NOTE: Signature - This form must be signed by the applicant in accordance with 37 CFR 1.33. See 37 CFR 1.4 for signature requirements and certifications. If more than one applicant, use multiple forms.

☐ Total of forms are submitted.

This collection of information is required by 37 CFR 1.131, 1.32, and 1.33. The information is required to obtain or retain a benefit by the public which is to file (and by the USPTO to process) an application. Confidentiality is governed by 35 U.S.C. 122 and 37 CFR 1.11 and 1.14. This collection is estimated to take 3 minutes to complete, including gathering, preparing, and submitting the completed application form to the USPTO. Time will vary depending upon the individual case. Any comments on the amount of time you require to complete this form and/or suggestions for reducing this burden, should be sent to the Chief Information Officer, U.S. Patent and Trademark Office, U.S. Department of Commerce, P.O. Box 1450, Alexandria, VA 22313-1450. DO NOT SEND FEES OR COMPLETED FORMS TO THIS ADDRESS. SEND TO: Commissioner for Patents, P.O. Box 1450, Alexandria, VA 22313-1450.

If you need assistance in completing the form, call 1-800-PTO-9199 and select option 2.

Electronic Acknowledgement Receipt

EFS ID:	40193626
Application Number:	16944667
International Application Number:	
Confirmation Number:	8322
Title of Invention:	Catheter Tray, Packaging System, Instruction Insert, and Associated Methods
First Named Inventor/Applicant Name:	Jennifer E. Tomes
Customer Number:	27939
Filer:	Philip Henry Burrus/Kayla Burrus
Filer Authorized By:	Philip Henry Burrus
Attorney Docket Number:	10055UCIP2D1C1C1C1C1C1
Receipt Date:	04-AUG-2020
Filing Date:	
Time Stamp:	18:03:21
Application Type:	Utility under 35 USC 111(a)

Payment information:

Submitted with Payment	no

File Listing:

Document Number	Document Description	File Name	File Size(Bytes)/ Message Digest	Multi Part /.zip	Pages (if appl.)
1		10055U_CIP2D1C1C1C1C1C1_USA_2020-8-4_IDS.pdf	962008 10100732088daa41ae711b0bbf8cce477a5a8be5	yes	84

	Multipart Description/PDF files in .zip description		
	Document Description	**Start**	**End**
	Transmittal Letter	1	2
	Information Disclosure Statement (IDS) Form (SB08)	3	84

Warnings:

Information:

2	Power of Attorney	10055U_P2D1C1C1C1C1C1_USA_2020-8-4_POA.pdf	601566 3977adceb129382e0a0ce7c44c5641167126281b	no	2

Warnings:

Information:

Total Files Size (in bytes):	1563574

This Acknowledgement Receipt evidences receipt on the noted date by the USPTO of the indicated documents, characterized by the applicant, and including page counts, where applicable. It serves as evidence of receipt similar to a Post Card, as described in MPEP 503.

<u>New Applications Under 35 U.S.C. 111</u>
If a new application is being filed and the application includes the necessary components for a filing date (see 37 CFR 1.53(b)-(d) and MPEP 506), a Filing Receipt (37 CFR 1.54) will be issued in due course and the date shown on this Acknowledgement Receipt will establish the filing date of the application.
<u>National Stage of an International Application under 35 U.S.C. 371</u>
If a timely submission to enter the national stage of an international application is compliant with the conditions of 35 U.S.C. 371 and other applicable requirements a Form PCT/DO/EO/903 indicating acceptance of the application as a national stage submission under 35 U.S.C. 371 will be issued in addition to the Filing Receipt, in due course.
<u>New International Application Filed with the USPTO as a Receiving Office</u>
If a new international application is being filed and the international application includes the necessary components for an international filing date (see PCT Article 11 and MPEP 1810), a Notification of the International Application Number and of the International Filing Date (Form PCT/RO/105) will be issued in due course, subject to prescriptions concerning national security, and the date shown on this Acknowledgement Receipt will establish the international filing date of the application.

IN THE UNITED STATES PATENT AND TRADEMARK OFFICE

Applicants:	Medline Industries, Inc.	Group Art Unit:	Unknown
Application No.:	16/944,667	Examiner:	Unknown
Date Filed:	July 31, 2020		
Title:	Catheter Tray, Packaging System, Instruction Insert, and Associated Methods		

INFORMATION DISCLOSURE STATEMENT (IDS)

Commissioner For Patents
P.O. Box 1450
Alexandria, VA 22313

In accordance with 37 C.F.R. §1.56 and in compliance with 37 C.F.R. §§1.97 and 1.98, the references listed on attached Form PTO/SB/08 and/or subsequently identified herein, are for consideration by the United States Patent and Trademark Office. Pursuant to the Office waiving the requirement under 37 CFR 1.98 (a)(2)(i) for submitting a copy of each cited U.S. patent and each U.S. patent application publication for all U.S. national patent applications filed after June 30, 2003 and for all international applications that have entered the national stage under 35 USC §371 after June 30, 2003, copies of the reference are not submitted herewith.

I. ☒ THIS IDS IS BEING FILED UNDER 37 C.F.R. §1.97(b)-(d): (check only one box)

a. ☒ within three months of the filing date of a national application other than a continued prosecution application under § 1.53(d); within three months of the date of entry of the national stage as set forth in § 1.491 in an international application; before the mailing date of a first Office Action on the merits; and/or before the mailing date of a first Office Action after the filing of a request for continued examination under § 1.114. No fee or statement is required.

b. ☐ before the mailing date of any of a Final Office Action under 37 C.F.R. §1.113, a Notice of Allowance under 37 C.F.R. §1.311, or an action that otherwise closes prosecution in the application. Petition fee set forth in §1.17(p) is required unless a statement under 37 C.F.R. §1.97(e) is provided.

c. ☐ on or before payment of the issue fee. Petition fee set forth in §1.17(p) and a statement under 37 C.F.R. §1.97(e) are required.

II. ☐ STATEMENT UNDER 37 C.F.R. §1.97(e) (check only one box, if applicable)

The undersigned hereby states that

a. ☐ each item of information contained in the IDS was cited in a communication from a foreign Patent Office in a counterpart foreign application not more than three months prior to the filing of IDS; or

b. ☐ no item of information contained in the IDS was cited in a communication from a foreign Patent Office in a counterpart foreign application, and to knowledge of the person signing the statement after making reasonable inquiry, no item of information contained in the IDS was known to any individual designated in 37 C.F.R. 1.56(c) more than three months prior to the filing of this statement, or

c. ☐ some of the items of information contained in the IDS were cited in a communication from a foreign Patent Office. As to this information, the undersigned states that each item of information contained in the IDS was cited in a communication from a foreign Patent Office in a counterpart foreign application not more than three months prior to the filing of this IDS. As to the remaining information, the undersigned hereby states that no item of this remaining information contained in the IDS was cited in a communication from a foreign Patent Office in a counterpart foreign application or, to the knowledge of the person signing the statement after making reasonable inquiry, no item of information contained in the IDS was known to any individual designated in 37 C.F.R. 1.56(c) more than three months prior to the filing of this statement.

III. STATEMENT UNDER 37 C.F.R. §1.98

The undersigned hereby states that

a. ☐ Pursuant to 37 C.F.R. §1.98, copies of non-U.S. patent documents cited in the attached form PTO/SB/08 are enclosed

b. ☒ No copies of the publication listed on the attached Form PTO/SB/08 are being provided pursuant to 37 C.F.R §1.98(d) because the publications were previously cited by or submitted to the Office in prior Application Serial No. 15/684,787 and 16/833,575 to which the above-identified application claims priority under 35 U.S.C §120.

IV. PAYMENT OF FEES

☐ Authorization to charge credit card accompanies this IDS.

☐ Please charge Deposit Account **503608**, Burrus Intel. Prop. Law Group, in the amount of $_____ for the above-indicated fee(s). .

☒ If Applicant has overlooked any additional fees, or if any overpayment has been made, the Commissioner is hereby authorized to credit or debit Deposit Account **503608**, Burrus Intel. Prop. Law Group, Enclosed is a Fee Transmittal in duplicate.

☐ Two Copies of this paper are attached for Deposit Account charges and debits.

The above references are being cited only in the interests of candor and without any admission that they constitute statutory prior art or contain matter which anticipates the invention or which would render the same obvious, either singly or in a combination, to a person of ordinary skill in the art.

Respectfully submitted,
Medline Industries, Inc.

Philip H. Burrus, IV
Attorney for Applicant(s)
Reg. No. 45,432
Tel. 404-797-8111

Burrus Intellectual Property Law Group
Customer Number 27939

Enclosures:

☒ Information Disclosure Statement by Applicant

☐ References

☐ Foreign Search Report

☐ Other:

PTO/SB/08a (01-10)
Approved for use through 07/31/2012. OMB 0651-0031
U.S. Patent and Trademark Office; U.S. DEPARTMENT OF COMMERCE

Under the Paperwork Reduction Act of 1995, no persons are required to respond to a collection of information unless it contains a valid OMB control number.

INFORMATION DISCLOSURE STATEMENT BY APPLICANT (Not for submission under 37 CFR 1.99)		
	Application Number	16/944,667
	Filing Date	Jul 31, 2020
	First Named Inventor	Jennifer E. Tomes
	Art Unit	
	Examiner Name	
	Attorney Docket Number	10055U CIP2 D1 C1C1C1C1C1

U.S.PATENTS

Examiner Initial*	Cite No	Patent Number	Kind Code[1]	Issue Date	Name of Patentee or Applicant of cited Document	Pages, Columns, Lines, Where Relevant Passages or Relevant Figures Appear

U.S.PATENT APPLICATION PUBLICATIONS

Examiner Initial*	Cite No	Publication Number	Kind Code[1]	Publication Date	Name of Patentee or Applicant of cited Document	Pages, Columns, Lines, Where Relevant Passages or Relevant Figures Appear

FOREIGN PATENT DOCUMENTS

Examiner Initial*	Cite No	Foreign Document Number[3]	Country Code[2]	Kind Code[4]	Publication Date	Name of Patentee or Applicant of cited Document	Pages,Columns,Lines where Relevant Passages or Relevant Figures Appear	T[5]

NON-PATENT LITERATURE DOCUMENTS

Examiner Initials*	Cite No	Include name of the author (in CAPITAL LETTERS), title of the article (when appropriate), title of the item (book, magazine, journal, serial, symposium, catalog, etc.), date, page(s), volume-issue number(s), publisher, city and/or country where published.	T[5]
		POON, ROBERT , "Final Office Action", USSN 16/258,231; Filed January 25, 2019; Attorney Docket No. 10055U D1 C2 C1; Mailed July 15, 2020,	

EXAMINER SIGNATURE

Examiner Signature		Date Considered	

PTO/SB/08a (01-10)
Approved for use through 07/31/2012. OMB 0651-0031
U.S. Patent and Trademark Office; U.S. DEPARTMENT OF COMMERCE

Under the Paperwork Reduction Act of 1995, no persons are required to respond to a collection of information unless it contains a valid OMB control number.

INFORMATION DISCLOSURE STATEMENT BY APPLICANT (Not for submission under 37 CFR 1.99)		
	Application Number	16/944,667
	Filing Date	Jul 31, 2020
	First Named Inventor	Jennifer E. Tomes
	Art Unit	
	Examiner Name	
	Attorney Docket Number	10055U CIP2 D1 C1C1C1C1C1

*EXAMINER: Initial if reference considered, whether or not citation is in conformance with MPEP 609. Draw line through a citation if not in conformance and not considered. Include copy of this form with next communication to applicant.

[1] See Kind Codes of USPTO Patent Documents at www.USPTO.GOV or MPEP 901.04. [2] Enter office that issued the document, by the two-letter code (WIPO Standard ST.3). [3] For Japanese patent documents, the indication of the year of the reign of the Emperor must precede the serial number of the patent document.
[4] Kind of document by the appropriate symbols as indicated on the document under WIPO Standard ST.16 if possible. [5] Applicant is to place a check mark here if English language translation is attached.

PTO/SB/08a (01-10)
Approved for use through 07/31/2012. OMB 0651-0031
U.S. Patent and Trademark Office; U.S. DEPARTMENT OF COMMERCE

Under the Paperwork Reduction Act of 1995, no persons are required to respond to a collection of information unless it contains a valid OMB control number.

INFORMATION DISCLOSURE STATEMENT BY APPLICANT (Not for submission under 37 CFR 1.99)		
	Application Number	16/944,667
	Filing Date	Jul 31, 2020
	First Named Inventor	Jennifer E. Tomes
	Art Unit	
	Examiner Name	
	Attorney Docket Number	10055U CIP2 D1 C1C1C1C1C1

CERTIFICATION STATEMENT

Please see 37 CFR 1.97 and 1.98 to make the appropriate selection(s):

☐ That each item of information contained in the information disclosure statement was first cited in any communication from a foreign patent office in a counterpart foreign application not more than three months prior to the filing of the information disclosure statement. See 37 CFR 1.97(e) (1).

OR

☐ That no item of information contained in the information disclosure statement was cited in a communication from a foreign patent office in a counterpart foreign application, and, to the knowledge of the person signing the certification after making reasonable inquiry, no item of information contained in the information disclosure statement was known to any individual designated in 37 CFR 1.56(c) more than three months prior to the filing of the information disclosure statement. See 37 CFR 1.97(e) (2).

☐ See attached certification statement.

☐ Fee set forth in 37 CFR 1.17 (p) has been submitted herewith.

☒ None

SIGNATURE

A signature of the applicant or representative is required in accordance with CFR 1.33, 10.18. Please see CFR 1.4(d) for the form of the signature.

Signature	/Philip H. Burrus, IV/	Date (YYYY-MM-DD)	2020-8-4
Name/Print	Philip H. Burrus	Registration Number	45,432

This collection of information is required by 37 CFR 1.97 and 1.98. The information is required to obtain or retain a benefit by the public which is to file (and by the USPTO to process) an application. Confidentiality is governed by 35 U.S.C. 122 and 37 CFR 1.14. This collection is estimated to take 1 hour to complete, including gathering, preparing and submitting the completed application form to the USPTO. Time will vary depending upon the individual case. Any comments on the amount of time you require to complete this form and/or suggestions for reducing this burden, should be sent to the Chief Information Officer, U.S. Patent and Trademark Office, U.S. Department of Commerce, P.O. Box 1450, Alexandria, VA 22313-1450. DO NOT SEND FEES OR COMPLETED FORMS TO THIS ADDRESS. **SEND TO: Commissioner for Patents, P.O. Box 1450, Alexandria, VA 22313-1450.**

Electronic Acknowledgement Receipt

EFS ID:	40193772
Application Number:	16944667
International Application Number:	
Confirmation Number:	8322
Title of Invention:	Catheter Tray, Packaging System, Instruction Insert, and Associated Methods
First Named Inventor/Applicant Name:	Jennifer E. Tomes
Customer Number:	27939
Filer:	Philip Henry Burrus/Kayla Burrus
Filer Authorized By:	Philip Henry Burrus
Attorney Docket Number:	10055UCIP2D1C1C1C1C1C1
Receipt Date:	04-AUG-2020
Filing Date:	
Time Stamp:	18:16:24
Application Type:	Utility under 35 USC 111(a)

Payment information:

Submitted with Payment	no

File Listing:

Document Number	Document Description	File Name	File Size(Bytes)/ Message Digest	Multi Part /.zip	Pages (if appl.)
1	Information Disclosure Statement (IDS) Form (SB08)	10055U_CIP2_D1_C1C1C1C1C1_USA_2020-8-4_IDS.pdf	127172 5a11abc50f119a133141d3d55551cde39139835a	no	3

Warnings:

Information:					
This is not an USPTO supplied IDS fillable form					
2	Non Patent Literature	10055U_D1_C2_C1_USA_2020-7-15_FinalOA.pdf	832390 499f75a793b2b3e7b7b4f6247053e8db47a159dd	no	11
Warnings:					
Information:					
			Total Files Size (in bytes):	959562	

This Acknowledgement Receipt evidences receipt on the noted date by the USPTO of the indicated documents, characterized by the applicant, and including page counts, where applicable. It serves as evidence of receipt similar to a Post Card, as described in MPEP 503.

New Applications Under 35 U.S.C. 111
If a new application is being filed and the application includes the necessary components for a filing date (see 37 CFR 1.53(b)-(d) and MPEP 506), a Filing Receipt (37 CFR 1.54) will be issued in due course and the date shown on this Acknowledgement Receipt will establish the filing date of the application.
National Stage of an International Application under 35 U.S.C. 371
If a timely submission to enter the national stage of an international application is compliant with the conditions of 35 U.S.C. 371 and other applicable requirements a Form PCT/DO/EO/903 indicating acceptance of the application as a national stage submission under 35 U.S.C. 371 will be issued in addition to the Filing Receipt, in due course.
New International Application Filed with the USPTO as a Receiving Office
If a new international application is being filed and the international application includes the necessary components for an international filing date (see PCT Article 11 and MPEP 1810), a Notification of the International Application Number and of the International Filing Date (Form PCT/RO/105) will be issued in due course, subject to prescriptions concerning national security, and the date shown on this Acknowledgement Receipt will establish the international filing date of the application.

UNITED STATES PATENT AND TRADEMARK OFFICE

UNITED STATES DEPARTMENT OF COMMERCE
United States Patent and Trademark Office
Address: COMMISSIONER FOR PATENTS
P.O. Box 1450
Alexandria, Virginia 22313-1450
www.uspto.gov

APPLICATION NUMBER	FILING OR 371(C) DATE	FIRST NAMED APPLICANT	ATTY. DOCKET NO./TITLE
16/944,667	07/31/2020	Jennifer E. Tomes	10055UCIP2D1C1C1C1C1C1

CONFIRMATION NO. 8322

IMPROPER CFR REQUEST

OC000000119077913

27939
Philip H. Burrus, IV
Burrus Intellectual Property Law Group LLC
222 12th Street NE
Suite 1803
Atlanta, GA 30309

Date Mailed: 08/10/2020

RESPONSE TO REQUEST FOR CORRECTED FILING RECEIPT

Continuity, Priority Claims, Petitions, and Non-Publication Requests

In response to your request for a corrected Filing Receipt, the Office is unable to comply with your request because:

- One or more of the benefit claims under 35 U.S.C. § 120 cannot be included on the Filing Receipt since applicant did not specify whether the application is a continuation, divisional or continuation-in-part of the prior application. Applicant must submit a new application data sheet (ADS) that sets forth the relationship, and the ADS must be accompanied by a petition under 37 CFR 1.78 if filed after the time period set forth in 37 CFR 1.78.

Questions about the contents of this notice and the requirements it sets forth should be directed to the Office of Data Management, Application Assistance Unit, at **(571) 272-4000** or **(571) 272-4200** or **1-888-786-0101**.

/eruga/

Bard Exhibit 1004.0209

UNITED STATES PATENT AND TRADEMARK OFFICE

UNITED STATES DEPARTMENT OF COMMERCE
United States Patent and Trademark Office
Address: COMMISSIONER FOR PATENTS
P.O. Box 1450
Alexandria, Virginia 22313-1450
www.uspto.gov

APPLICATION NUMBER	FILING or 371(c) DATE	GRP ART UNIT	FIL FEE REC'D	ATTY.DOCKET.NO	TOT CLAIMS	IND CLAIMS
16/944,667	07/31/2020	3736	1720	10055UCIP2D1C1C1C1C1C1	20	3

CONFIRMATION NO. 8322

FILING RECEIPT

OC000000119077874

27939
Philip H. Burrus, IV
Burrus Intellectual Property Law Group LLC
222 12th Street NE
Suite 1803
Atlanta, GA 30309

Date Mailed: 08/10/2020

Receipt is acknowledged of this non-provisional utility patent application. The application will be taken up for examination in due course. Applicant will be notified as to the results of the examination. Any correspondence concerning the application must include the following identification information: the U.S. APPLICATION NUMBER, FILING DATE, NAME OF FIRST INVENTOR, and TITLE OF INVENTION. Fees transmitted by check or draft are subject to collection.

Please verify the accuracy of the data presented on this receipt. If an error is noted on this Filing Receipt, please submit a written request for a corrected Filing Receipt, including a properly marked-up ADS showing the changes with strike-through for deletions and underlining for additions. If you received a "Notice to File Missing Parts" or other Notice requiring a response for this application, please submit any request for correction to this Filing Receipt with your reply to the Notice. When the USPTO processes the reply to the Notice, the USPTO will generate another Filing Receipt incorporating the requested corrections provided that the request is grantable.

Inventor(s)

Jennifer E. Tomes, Mundelein, IL;
Sarah Dickinson, Chicago, IL;
Deborah Adler, New York, NY;
Jack Maze, Long Grove, IL;
Alberto Savage, Buffalo Grove, IL;
Kenneth Chua, Glenview, IL;
Earl Wilson, Ingleside, IL;
John Kutsch, Harvard, IL;

Applicant(s)

Medline Industries, Inc, Northfied, IL;

Power of Attorney: The patent practitioners associated with Customer Number 27939

Domestic Priority data as claimed by applicant

This application is a CON of 16/833,575 03/28/2020

Foreign Applications for which priority is claimed (You may be eligible to benefit from the **Patent Prosecution Highway** program at the USPTO. Please see http://www.uspto.gov for more information.) - None.
Foreign application information must be provided in an Application Data Sheet in order to constitute a claim to foreign priority. See 37 CFR 1.55 and 1.76.

Permission to Access Application via Priority Document Exchange: Yes

Bard Exhibit 1004.0210

Permission to Access Search Results: Yes

Applicant may provide or rescind an authorization for access using Form PTO/SB/39 or Form PTO/SB/69 as appropriate.

If Required, Foreign Filing License Granted: 08/07/2020
The country code and number of your priority application, to be used for filing abroad under the Paris Convention, is **US 16/944,667**
Projected Publication Date: 09/30/2021
Non-Publication Request: No
Early Publication Request: No
Title

Catheter Tray, Packaging System, Instruction Insert, and Associated Methods

Preliminary Class

206

Statement under 37 CFR 1.55 or 1.78 for AIA (First Inventor to File) Transition Applications: No

PROTECTING YOUR INVENTION OUTSIDE THE UNITED STATES

Since the rights granted by a U.S. patent extend only throughout the territory of the United States and have no effect in a foreign country, an inventor who wishes patent protection in another country must apply for a patent in a specific country or in regional patent offices. Applicants may wish to consider the filing of an international application under the Patent Cooperation Treaty (PCT). An international (PCT) application generally has the same effect as a regular national patent application in each PCT-member country. The PCT process **simplifies** the filing of patent applications on the same invention in member countries, but **does not result** in a grant of "an international patent" and does not eliminate the need of applicants to file additional documents and fees in countries where patent protection is desired.

Almost every country has its own patent law, and a person desiring a patent in a particular country must make an application for patent in that country in accordance with its particular laws. Since the laws of many countries differ in various respects from the patent law of the United States, applicants are advised to seek guidance from specific foreign countries to ensure that patent rights are not lost prematurely.

Applicants also are advised that in the case of inventions made in the United States, the Director of the USPTO must issue a license before applicants can apply for a patent in a foreign country. The filing of a U.S. patent application serves as a request for a foreign filing license. The application's filing receipt contains further information and guidance as to the status of applicant's license for foreign filing.

Applicants may wish to consult the USPTO booklet, "General Information Concerning Patents" (specifically, the section entitled "Treaties and Foreign Patents") for more information on timeframes and deadlines for filing foreign patent applications. The guide is available either by contacting the USPTO Contact Center at 800-786-9199, or it can be viewed on the USPTO website at http://www.uspto.gov/web/offices/pac/doc/general/index.html.

For information on preventing theft of your intellectual property (patents, trademarks and copyrights), you may wish to consult the U.S. Government website, http://www.stopfakes.gov. Part of a Department of Commerce initiative, this website includes self-help "toolkits" giving innovators guidance on how to protect intellectual property in specific

Bard Exhibit 1004.0211

countries such as China, Korea and Mexico. For questions regarding patent enforcement issues, applicants may call the U.S. Government hotline at 1-866-999-HALT (1-866-999-4258).

LICENSE FOR FOREIGN FILING UNDER

Title 35, United States Code, Section 184

Title 37, Code of Federal Regulations, 5.11 & 5.15

GRANTED

The applicant has been granted a license under 35 U.S.C. 184, if the phrase "IF REQUIRED, FOREIGN FILING LICENSE GRANTED" followed by a date appears on this form. Such licenses are issued in all applications where the conditions for issuance of a license have been met, regardless of whether or not a license may be required as set forth in 37 CFR 5.15. The scope and limitations of this license are set forth in 37 CFR 5.15(a) unless an earlier license has been issued under 37 CFR 5.15(b). The license is subject to revocation upon written notification. The date indicated is the effective date of the license, unless an earlier license of similar scope has been granted under 37 CFR 5.13 or 5.14.

This license is to be retained by the licensee and may be used at any time on or after the effective date thereof unless it is revoked. This license is automatically transferred to any related applications(s) filed under 37 CFR 1.53(d). This license is not retroactive.

The grant of a license does not in any way lessen the responsibility of a licensee for the security of the subject matter as imposed by any Government contract or the provisions of existing laws relating to espionage and the national security or the export of technical data. Licensees should apprise themselves of current regulations especially with respect to certain countries, of other agencies, particularly the Office of Defense Trade Controls, Department of State (with respect to Arms, Munitions and Implements of War (22 CFR 121-128)); the Bureau of Industry and Security, Department of Commerce (15 CFR parts 730-774); the Office of Foreign AssetsControl, Department of Treasury (31 CFR Parts 500+) and the Department of Energy.

NOT GRANTED

No license under 35 U.S.C. 184 has been granted at this time, if the phrase "IF REQUIRED, FOREIGN FILING LICENSE GRANTED" DOES NOT appear on this form. Applicant may still petition for a license under 37 CFR 5.12, if a license is desired before the expiration of 6 months from the filing date of the application. If 6 months has lapsed from the filing date of this application and the licensee has not received any indication of a secrecy order under 35 U.S.C. 181, the licensee may foreign file the application pursuant to 37 CFR 5.15(b).

SelectUSA

The United States represents the largest, most dynamic marketplace in the world and is an unparalleled location for business investment, innovation, and commercialization of new technologies. The U.S. offers tremendous resources and advantages for those who invest and manufacture goods here. Through SelectUSA, our nation works to promote and facilitate business investment. SelectUSA provides information assistance to the international investor community; serves as an ombudsman for existing and potential investors; advocates on behalf of U.S. cities, states, and regions competing for global investment; and counsels U.S. economic development organizations on investment attraction best practices. To learn more about why the United States is the best country in the world to develop

Bard Exhibit 1004.0212

technology, manufacture products, deliver services, and grow your business, visit http://www.SelectUSA.gov or call +1-202-482-6800.

PATENT APPLICATION FEE DETERMINATION RECORD

Substitute for Form PTO-875

Application or Docket Number
16/944,667

APPLICATION AS FILED - PART I

FOR	(Column 1) NUMBER FILED	(Column 2) NUMBER EXTRA	SMALL ENTITY RATE($)	SMALL ENTITY FEE($)	OR	OTHER THAN SMALL ENTITY RATE($)	OTHER THAN SMALL ENTITY FEE($)
BASIC FEE (37 CFR 1.16(a), (b), or (c))	N/A	N/A	N/A			N/A	300
SEARCH FEE (37 CFR 1.16(k), (i), or (m))	N/A	N/A	N/A			N/A	660
EXAMINATION FEE (37 CFR 1.16(o), (p), or (q))	N/A	N/A	N/A			N/A	760
TOTAL CLAIMS (37 CFR 1.16(i))	20 minus 20 =	*			OR	x 100 =	0.00
INDEPENDENT CLAIMS (37 CFR 1.16(h))	3 minus 3 =	*				x 460 =	0.00
APPLICATION SIZE FEE (37 CFR 1.16(s))	If the specification and drawings exceed 100 sheets of paper, the application size fee due is $310 ($155 for small entity) for each additional 50 sheets or fraction thereof. See 35 U.S.C. 41(a)(1)(G) and 37 CFR 1.16(s).						0.00
MULTIPLE DEPENDENT CLAIM PRESENT (37 CFR 1.16(j))							0.00
* If the difference in column 1 is less than zero, enter "0" in column 2.			TOTAL			TOTAL	1720

APPLICATION AS AMENDED - PART II

		(Column 1) CLAIMS REMAINING AFTER AMENDMENT		(Column 2) HIGHEST NUMBER PREVIOUSLY PAID FOR	(Column 3) PRESENT EXTRA	SMALL ENTITY RATE($)	SMALL ENTITY ADDITIONAL FEE($)	OR	OTHER THAN SMALL ENTITY RATE($)	OTHER THAN SMALL ENTITY ADDITIONAL FEE($)
AMENDMENT A	Total (37 CFR 1.16(i))	*	Minus	**	=	x =		OR	x =	
AMENDMENT A	Independent (37 CFR 1.16(h))	*	Minus	***	=	x =		OR	x =	
AMENDMENT A	Application Size Fee (37 CFR 1.16(s))									
AMENDMENT A	FIRST PRESENTATION OF MULTIPLE DEPENDENT CLAIM (37 CFR 1.16(j))							OR		
						TOTAL ADD'L FEE		OR	TOTAL ADD'L FEE	

		(Column 1) CLAIMS REMAINING AFTER AMENDMENT		(Column 2) HIGHEST NUMBER PREVIOUSLY PAID FOR	(Column 3) PRESENT EXTRA	RATE($)	ADDITIONAL FEE($)		RATE($)	ADDITIONAL FEE($)
AMENDMENT B	Total (37 CFR 1.16(i))	*	Minus	**	=	x =		OR	x =	
AMENDMENT B	Independent (37 CFR 1.16(h))	*	Minus	***	=	x =		OR	x =	
AMENDMENT B	Application Size Fee (37 CFR 1.16(s))									
AMENDMENT B	FIRST PRESENTATION OF MULTIPLE DEPENDENT CLAIM (37 CFR 1.16(j))							OR		
						TOTAL ADD'L FEE		OR	TOTAL ADD'L FEE	

* If the entry in column 1 is less than the entry in column 2, write "0" in column 3.
** If the "Highest Number Previously Paid For" IN THIS SPACE is less than 20, enter "20".
*** If the "Highest Number Previously Paid For" IN THIS SPACE is less than 3, enter "3".
The "Highest Number Previously Paid For" (Total or Independent) is the highest found in the appropriate box in column 1.

IN THE UNITED STATES PATENT AND TRADEMARK OFFICE

Serial No:	16/944,667
Examiner:	Unknown
Art Group:	Unknown
Reference No.:	10055U CIP2 D1 C1 C1 C1 C1 C1
Appn. Filed:	July 31, 2020
First Inventor:	Jennifer E. Tomes
Title:	Catheter Tray, Packaging System, Instruction Insert, and Associated Methods

August 25, 2020

Commissioner for Patents
P.O. Box 1450
Alexandria, Virginia 22313-1450

Corrected Application Data Sheet in Accordance with 37 CFR §1.76(c) and Request for Corrected Filing Receipt

When the present application was filed, an inadvertent typographical error occurred without deceptive intent on the Application Data Sheet. Specifically, on the Application Data Sheet, the priority claim under 35 USC §120 was broken and listed in an incorrect order.

According to 37 CFR §1.76(c), information on a previously submitted data sheet may be updated until the payment of the issue fee. According to 37 CFR §1.76(c)(1), these updates can include changes to domestic benefit information as long as the same is in compliance with 37 CFR §1.78.

According to 37 CFR §1.78(d)(3)(ii), which covers priority claims under 35 USC §120, priority claims may be submitted in non-provisional applications so long as the same occurs within the later of four months from the actual filing date or sixteen months

from the filing date of the case to which the priority claim was made. In the present case, Applicant is within the four-month period from filing.

Accordingly, to correct this inadvertent typographical error, a corrected Application Data Sheet under 37 CFR § 1.76(c) is included herewith to correct the priority claim chain under 35 USC §120.

The processing fee set forth in § 1.17(i) is enclosed herewith. If the applicant has overlooked any fees, the Commissioner is hereby authorized to charge any underpayment, or credit any overpayment, to Deposit Account No. 50-3608.

Respectfully submitted,

Philip H. Burrus, IV
Attorney for Applicant
Registration No.: 45,432
404-797-8111
404-880-9912 (fax)
pburrus@burrusiplaw.com

Bard Exhibit 1004.0216

Approved for use through 04/30/2017. OMB 0651-0032
U.S. Patent and Trademark Office; U.S. DEPARTMENT OF COMMERCE
Under the Paperwork Reduction Act of 1995, no persons are required to respond to a collection of information unless it contains a valid OMB control number

Application Data Sheet 37 CFR 1.76	Attorney Docket Number	10055UCIP2D1C1C1C1C1C1
	Application Number	
Title of Invention	Catheter Tray, Packaging System, Instruction Insert, and Associated Methods	

The application data sheet is part of the provisional or nonprovisional application for which it is being submitted. The following form contains the bibliographic data arranged in a format specified by the United States Patent and Trademark Office as outlined in 37 CFR 1.76.
This document may be completed electronically and submitted to the Office in electronic format using the Electronic Filing System (EFS) or the document may be printed and included in a paper filed application.

Secrecy Order 37 CFR 5.2:

☐ Portions or all of the application associated with this Application Data Sheet may fall under a Secrecy Order pursuant to 37 CFR 5.2 (Paper filers only. Applications that fall under Secrecy Order may not be filed electronically.)

Inventor Information:

Inventor 1 Remove

Legal Name

Prefix	Given Name	Middle Name	Family Name	Suffix
	Jennifer	E.	Tomes	

Residence Information (Select One) ◉ US Residency ◯ Non US Residency ◯ Active US Military Service

City	Mundelein	State/Province	IL	Country of Residence	US

Mailing Address of Inventor:

Address 1	P.O. Box 904		
Address 2			
City	Mundelein	State/Province	IL
Postal Code	60060	Country i	US

Inventor 2 Remove

Legal Name

Prefix	Given Name	Middle Name	Family Name	Suffix
	Sarah		Dickinson	

Residence Information (Select One) ◉ US Residency ◯ Non US Residency ◯ Active US Military Service

City	Chicago	State/Province	IL	Country of Residence	US

Mailing Address of Inventor:

Address 1	522 West Belden, Apartment L1		
Address 2			
City	Chicago	State/Province	IL
Postal Code	60614	Country i	US

Inventor 3 Remove

Legal Name

Prefix	Given Name	Middle Name	Family Name	Suffix
	Deborah		Adler	

Residence Information (Select One) ◉ US Residency ◯ Non US Residency ◯ Active US Military Service

Application Data Sheet 37 CFR 1.76	Attorney Docket Number	10055UCIP2D1C1C1C1C1C1
	Application Number	
Title of Invention	Catheter Tray, Packaging System, Instruction Insert, and Associated Methods	

City	New York	State/Province	NY	Country of Residence	US

Mailing Address of Inventor:

Address 1	60 East 8th Street, Apt 5E
Address 2	
City	New York
State/Province	NY
Postal Code	10003
Country	US

Inventor 4 Remove

Legal Name

Prefix	Given Name	Middle Name	Family Name	Suffix
	Jack		Maze	

Residence Information (Select One) (•) US Residency ( ) Non US Residency ( ) Active US Military Service

City	Long Grove	State/Province	IL	Country of Residence	US

Mailing Address of Inventor:

Address 1	5851 Teal Lane
Address 2	
City	Long Grove
State/Province	IL
Postal Code	60047
Country	US

Inventor 5 Remove

Legal Name

Prefix	Given Name	Middle Name	Family Name	Suffix
	Alberto		Savage	

Residence Information (Select One) (•) US Residency ( ) Non US Residency ( ) Active US Military Service

City	Buffalo Grove	State/Province	IL	Country of Residence	US

Mailing Address of Inventor:

Address 1	471 Arbor Gate Lane
Address 2	
City	Buffalo Grove
State/Province	IL
Postal Code	60089
Country	US

Inventor 6 Remove

Legal Name

Prefix	Given Name	Middle Name	Family Name	Suffix
	Kenneth		Chua	

Residence Information (Select One) (•) US Residency ( ) Non US Residency ( ) Active US Military Service

City	Glenview	State/Province	IL	Country of Residence	US

Approved for use through 04/30/2017. OMB 0651-0032
U.S. Patent and Trademark Office; U.S. DEPARTMENT OF COMMERCE
Under the Paperwork Reduction Act of 1995, no persons are required to respond to a collection of information unless it contains a valid OMB control number.

Application Data Sheet 37 CFR 1.76	Attorney Docket Number	10055UCIP2D1C1C1C1C1C1
	Application Number	
Title of Invention	Catheter Tray, Packaging System, Instruction Insert, and Associated Methods	

Mailing Address of Inventor:

Address 1	3904 Harvest Lane		
Address 2			
City	Glenview	**State/Province**	IL
Postal Code	60025	**Country** i	US

Inventor 7 Remove

Legal Name

Prefix	Given Name	Middle Name	Family Name	Suffix
	Earl		Wilson	

Residence Information (Select One) (•) US Residency ( ) Non US Residency ( ) Active US Military Service

City	Ingleside	**State/Province**	IL	**Country of Residence** i	US

Mailing Address of Inventor:

Address 1	26075 West Rollins Road		
Address 2			
City	Ingleside	**State/Province**	IL
Postal Code	60041	**Country** i	US

Inventor 8 Remove

Legal Name

Prefix	Given Name	Middle Name	Family Name	Suffix
	John		Kutsch	

Residence Information (Select One) (•) US Residency ( ) Non US Residency ( ) Active US Military Service

City	Harvard	**State/Province**	IL	**Country of Residence** i	US

Mailing Address of Inventor:

Address 1	107 West Front Street		
Address 2			
City	Harvard	**State/Province**	IL
Postal Code	60033	**Country** i	US

All Inventors Must Be Listed - Additional Inventor Information blocks may be generated within this form by selecting the **Add** button. Add

Correspondence Information:

Enter either Customer Number or complete the Correspondence Information section below. For further information see 37 CFR 1.33(a).

☐ **An Address is being provided for the correspondence information of this application.**

Customer Number	27939

EFS Web 2.2.12

Approved for use through 04/30/2017. OMB 0651-0032
U.S. Patent and Trademark Office; U.S. DEPARTMENT OF COMMERCE
Under the Paperwork Reduction Act of 1995, no persons are required to respond to a collection of information unless it contains a valid OMB control number

Application Data Sheet 37 CFR 1.76	Attorney Docket Number	10055UCIP2D1C1C1C1C1C1
	Application Number	
Title of Invention	Catheter Tray, Packaging System, Instruction Insert, and Associated Methods	

Email Address	pburrus@burrusiplaw.com	Add Email	Remove Email

Application Information:

Title of the Invention	Catheter Tray, Packaging System, Instruction Insert, and Associated Methods		
Attorney Docket Number	10055UCIP2D1C1C1C1C1C1	**Small Entity Status Claimed** ☐	
Application Type	Nonprovisional		
Subject Matter	Utility		
Total Number of Drawing Sheets (if any)		**Suggested Figure for Publication (if any)**	

Filing By Reference:

Only complete this section when filing an application by reference under 35 U.S.C. 111(c) and 37 CFR 1.57(a). Do not complete this section if application papers including a specification and any drawings are being filed. Any domestic benefit or foreign priority information must be provided in the appropriate section(s) below (i.e., "Domestic Benefit/National Stage Information" and "Foreign Priority Information").

For the purposes of a filing date under 37 CFR 1.53(b), the description and any drawings of the present application are replaced by this reference to the previously filed application, subject to conditions and requirements of 37 CFR 1.57(a).

Application number of the previously filed application	Filing date (YYYY-MM-DD)	Intellectual Property Authority or Country

Publication Information:

☐ Request Early Publication (Fee required at time of Request 37 CFR 1.219)

☐ **Request Not to Publish.** I hereby request that the attached application not be published under 35 U.S.C. 122(b) and certify that the invention disclosed in the attached application **has not and will not** be the subject of an application filed in another country, or under a multilateral international agreement, that requires publication at eighteen months after filing.

Representative Information:

Representative information should be provided for all practitioners having a power of attorney in the application. Providing this information in the Application Data Sheet does not constitute a power of attorney in the application (see 37 CFR 1.32).
Either enter Customer Number or complete the Representative Name section below. If both sections are completed the customer Number will be used for the Representative Information during processing.

Please Select One:	◉ Customer Number	○ US Patent Practitioner	○ Limited Recognition (37 CFR 11.9)
Customer Number	27939		

Approved for use through 04/30/2017. OMB 0651-0032
U.S. Patent and Trademark Office; U.S. DEPARTMENT OF COMMERCE
Under the Paperwork Reduction Act of 1995, no persons are required to respond to a collection of information unless it contains a valid OMB control number.

Application Data Sheet 37 CFR 1.76	Attorney Docket Number	10065UCIP2D1C1C1C1C1C1
	Application Number	
Title of Invention	Catheter Tray, Packaging System, Instruction Insert, and Associated Methods	

Domestic Benefit/National Stage Information:

This section allows for the applicant to either claim benefit under 35 U.S.C. 119(e), 120, 121, 365(c), or 386(c) or indicate National Stage entry from a PCT application. Providing benefit claim information in the Application Data Sheet constitutes the specific reference required by 35 U.S.C. 119(e) or 120, and 37 CFR 1.78.
When referring to the current application, please leave the "Application Number" field blank.

Prior Application Status	Pending		Remove
Application Number	Continuity Type	Prior Application Number	Filing or 371(c) Date (YYYY-MM-DD)
	Continuation of	16833575	2020-03-28

Prior Application Status	Patented			Remove	
Application Number	Continuity Type	Prior Application Number	Filing Date (YYYY-MM-DD)	Patent Number	Issue Date (YYYY-MM-DD)
16833575	Continuation of	15684787	2017-08-23	10640243	2020-05-05

Prior Application Status	Patented			Remove	
Application Number	Continuity Type	Prior Application Number	Filing Date (YYYY-MM-DD)	Patent Number	Issue Date (YYYY-MM-DD)
15684787	Continuation of	14793455	2015-07-07	9745088	2017-08-29

Prior Application Status	Patented			Remove	
Application Number	Continuity Type	Prior Application Number	Filing Date (YYYY-MM-DD)	Patent Number	Issue Date (YYYY-MM-DD)
14793455	Continuation of	13860902	2013-04-11	9522753	2016-12-20

Prior Application Status	Patented			Remove	
Application Number	Continuity Type	Prior Application Number	Filing Date (YYYY-MM-DD)	Patent Number	Issue Date (YYYY-MM-DD)
13860902	Division of	13155026	2011-06-07	8448786	2013-05-28

Prior Application Status	Expired		Remove
Application Number	Continuity Type	Prior Application Number	Filing or 371(c) Date (YYYY-MM-DD)
13155026	Claims benefit of provisional	61352140	2010-06-07

Prior Application Status	Expired		Remove
Application Number	Continuity Type	Prior Application Number	Filing or 371(c) Date (YYYY-MM-DD)
13155026	Claims benefit of provisional	61352155	2010-06-07

Prior Application Status	Expired		Remove
Application Number	Continuity Type	Prior Application Number	Filing or 371(c) Date (YYYY-MM-DD)
13155026	Claims benefit of provisional	61428944	2010-12-31

Application Data Sheet 37 CFR 1.76	Attorney Docket Number	10055UCIP2D1C1C1C1C1C1
	Application Number	
Title of Invention	Catheter Tray, Packaging System, Instruction Insert, and Associated Methods	

Prior Application Status	Expired		Remove
Application Number	Continuity Type	Prior Application Number	Filing or 371(c) Date (YYYY-MM-DD)
13155026	Claims benefit of provisional	61437796	2011-01-31

Prior Application Status	Patented			Remove	
Application Number	Continuity Type	Prior Application Number	Filing Date (YYYY-MM-DD)	Patent Number	Issue Date (YYYY-MM-DD)
13155026	Continuation of	12495148	2009-06-30	8631935	2014-01-21

Prior Application Status	Abandoned		Remove
Application Number	Continuity Type	Prior Application Number	Filing or 371(c) Date (YYYY-MM-DD)
13155026	Continuation in part of	12647515	2009-12-27

Prior Application Status	Patented			Remove	
Application Number	Continuity Type	Prior Application Number	Filing Date (YYYY-MM-DD)	Patent Number	Issue Date (YYYY-MM-DD)
13155026	Continuation in part of	13153265	2011-06-03	9795761	2017-10-24

Prior Application Status	Abandoned		Remove
Application Number	Continuity Type	Prior Application Number	Filing or 371(c) Date (YYYY-MM-DD)
13155026	Continuation in part of	13153300	2011-06-03

Prior Application Status	Expired		Remove
Application Number	Continuity Type	Prior Application Number	Filing or 371(c) Date (YYYY-MM-DD)
12495148	Claims benefit of provisional	61183629	2009-06-03

~~Prior Application Status~~	~~Pending~~		Remove
Application Number	Continuity Type	Prior Application Number	Filing or 371(c) Date (YYYY-MM-DD)
~~16333575~~	~~Continuation of~~	~~15684787~~	~~2017-08-23~~

Additional Domestic Benefit/National Stage Data may be generated within this form by selecting the **Add** button.

Foreign Priority Information:

Application Data Sheet 37 CFR 1.76	Attorney Docket Number	10055UCIP2D1C1C1C1C1C1
	Application Number	
Title of Invention	Catheter Tray, Packaging System, Instruction Insert, and Associated Methods	

This section allows for the applicant to claim priority to a foreign application. Providing this information in the application data sheet constitutes the claim for priority as required by 35 U.S.C. 119(b) and 37 CFR 1.55. When priority is claimed to a foreign application that is eligible for retrieval under the priority document exchange program (PDX)[i] the information will be used by the Office to automatically attempt retrieval pursuant to 37 CFR 1.55(i)(1) and (2). Under the PDX program, applicant bears the ultimate responsibility for ensuring that a copy of the foreign application is received by the Office from the participating foreign intellectual property office, or a certified copy of the foreign priority application is filed, within the time period specified in 37 CFR 1.55(g)(1).

Remove

Application Number	Country[i]	Filing Date (YYYY-MM-DD)	Access Code[i] (if applicable)

Additional Foreign Priority Data may be generated within this form by selecting the **Add** button.

Statement under 37 CFR 1.55 or 1.78 for AIA (First Inventor to File) Transition Applications

☐ This application (1) claims priority to or the benefit of an application filed before March 16, 2013 and (2) also contains, or contained at any time, a claim to a claimed invention that has an effective filing date on or after March 16, 2013.
NOTE: By providing this statement under 37 CFR 1.55 or 1.78, this application, with a filing date on or after March 16, 2013, will be examined under the first inventor to file provisions of the AIA.

Application Data Sheet 37 CFR 1.76	Attorney Docket Number	10055UCIP2D1C1C1C1C1C1
	Application Number	
Title of Invention	Catheter Tray, Packaging System, Instruction Insert, and Associated Methods	

Authorization or Opt-Out of Authorization to Permit Access:

When this Application Data Sheet is properly signed and filed with the application, applicant has provided written authority to permit a participating foreign intellectual property (IP) office access to the instant application-as-filed (see paragraph A in subsection 1 below) and the European Patent Office (EPO) access to any search results from the instant application (see paragraph B in subsection 1 below).

Should applicant choose not to provide an authorization identified in subsection 1 below, applicant **must opt-out** of the authorization by checking the corresponding box A or B or both in subsection 2 below.

NOTE: This section of the Application Data Sheet is **ONLY** reviewed and processed with the **INITIAL** filing of an application. After the initial filing of an application, an Application Data Sheet cannot be used to provide or rescind authorization for access by a foreign IP office(s). Instead, Form PTO/SB/39 or PTO/SB/69 must be used as appropriate.

1. Authorization to Permit Access by a Foreign Intellectual Property Office(s)

A. Priority Document Exchange (PDX) - Unless box A in subsection 2 (opt-out of authorization) is checked, the undersigned hereby **grants the USPTO authority** to provide the European Patent Office (EPO), the Japan Patent Office (JPO), the Korean Intellectual Property Office (KIPO), the State Intellectual Property Office of the People's Republic of China (SIPO), the World Intellectual Property Organization (WIPO), and any other foreign intellectual property office participating with the USPTO in a bilateral or multilateral priority document exchange agreement in which a foreign application claiming priority to the instant patent application is filed, access to: (1) the instant patent application-as-filed and its related bibliographic data, (2) any foreign or domestic application to which priority or benefit is claimed by the instant application and its related bibliographic data, and (3) the date of filing of this Authorization. See 37 CFR 1.14(h)(1).

B. Search Results from U.S. Application to EPO - Unless box B in subsection 2 (opt-out of authorization) is checked, the undersigned hereby **grants the USPTO authority** to provide the EPO access to the bibliographic data and search results from the instant patent application when a European patent application claiming priority to the instant patent application is filed. See 37 CFR 1.14(h)(2).

The applicant is reminded that the EPO's Rule 141(1) EPC (European Patent Convention) requires applicants to submit a copy of search results from the instant application without delay in a European patent application that claims priority to the instant application.

2. Opt-Out of Authorizations to Permit Access by a Foreign Intellectual Property Office(s)

☐ A. Applicant **DOES NOT** authorize the USPTO to permit a participating foreign IP office access to the instant application-as-filed. If this box is checked, the USPTO will not be providing a participating foreign IP office with any documents and information identified in subsection 1A above.

☐ B. Applicant **DOES NOT** authorize the USPTO to transmit to the EPO any search results from the instant patent application. If this box is checked, the USPTO will not be providing the EPO with search results from the instant application.

NOTE: Once the application has published or is otherwise publicly available, the USPTO may provide access to the application in accordance with 37 CFR 1.14.

Approved for use through 04/30/2017. OMB 0651-0032
U.S. Patent and Trademark Office; U.S. DEPARTMENT OF COMMERCE
Under the Paperwork Reduction Act of 1995, no persons are required to respond to a collection of information unless it contains a valid OMB control number.

Application Data Sheet 37 CFR 1.76	Attorney Docket Number	10055UCIP2D1C1C1C1C1C1
	Application Number	
Title of Invention	Catheter Tray, Packaging System, Instruction Insert, and Associated Methods	

Applicant Information:

Providing assignment information in this section does not substitute for compliance with any requirement of part 3 of Title 37 of CFR to have an assignment recorded by the Office.

Applicant 1

If the applicant is the inventor (or the remaining joint inventor or inventors under 37 CFR 1.45), this section should not be completed. The information to be provided in this section is the name and address of the legal representative who is the applicant under 37 CFR 1.43; or the name and address of the assignee, person to whom the inventor is under an obligation to assign the invention, or person who otherwise shows sufficient proprietary interest in the matter who is the applicant under 37 CFR 1.46. If the applicant is an applicant under 37 CFR 1.46 (assignee, person to whom the inventor is obligated to assign, or person who otherwise shows sufficient proprietary interest) together with one or more joint inventors, then the joint inventor or inventors who are also the applicant should be identified in this section.

Clear

- (●) Assignee
- ( ) Legal Representative under 35 U.S.C. 117
- ( ) Joint Inventor
- ( ) Person to whom the inventor is obligated to assign.
- ( ) Person who shows sufficient proprietary interest

If applicant is the legal representative, indicate the authority to file the patent application, the inventor is:

Name of the Deceased or Legally Incapacitated Inventor:

If the Applicant is an Organization check here. ☒

Organization Name	Medline Industries, Inc		
Mailing Address Information For Applicant:			
Address 1	Three Lakes Drive		
Address 2			
City	Northfield	**State/Province**	IL
Country	US	Postal Code	60093
Phone Number		Fax Number	
Email Address			

Additional Applicant Data may be generated within this form by selecting the Add button.

Assignee Information including Non-Applicant Assignee Information:

Providing assignment information in this section does not substitute for compliance with any requirement of part 3 of Title 37 of CFR to have an assignment recorded by the Office.

Approved for use through 04/30/2017. OMB 0651-0032
U.S. Patent and Trademark Office; U.S. DEPARTMENT OF COMMERCE
Under the Paperwork Reduction Act of 1995, no persons are required to respond to a collection of information unless it contains a valid OMB control number.

Application Data Sheet 37 CFR 1.76	Attorney Docket Number	10055UCIP2D1C1C1C1C1C1
	Application Number	
Title of Invention	Catheter Tray, Packaging System, Instruction Insert, and Associated Methods	

Assignee 1

Complete this section if assignee information, including non-applicant assignee information, is desired to be included on the patent application publication. An assignee-applicant identified in the "Applicant Information" section will appear on the patent application publication as an applicant. For an assignee-applicant, complete this section only if identification as an assignee is also desired on the patent application publication.

If the Assignee or Non-Applicant Assignee is an Organization check here. ☐

Prefix	**Given Name**	Middle Name	**Family Name**	Suffix

Mailing Address Information For Assignee including Non-Applicant Assignee:

Address 1			
Address 2			
City		**State/Province**	
Country i		Postal Code	
Phone Number		Fax Number	
Email Address			

Additional Assignee or Non-Applicant Assignee Data may be generated within this form by selecting the Add button.

Signature:

NOTE: This Application Data Sheet must be signed in accordance with 37 CFR 1.33(b). **However, if this Application Data Sheet is submitted with the INITIAL filing of the application and either box A or B is not checked in subsection 2 of the "Authorization or Opt-Out of Authorization to Permit Access" section, then this form must also be signed in accordance with 37 CFR 1.14(c).**

This Application Data Sheet must be signed by a patent practitioner if one or more of the applicants is a **juristic entity** (e.g., corporation or association). If the applicant is two or more joint inventors, this form must be signed by a patent practitioner, all joint inventors who are the applicant, or one or more joint inventor-applicants who have been given power of attorney (e.g., see USPTO Form PTO/AIA/81) on behalf of all joint inventor-applicants.

See 37 CFR 1.4(d) for the manner of making signatures and certifications.

Signature	/Philip H. Burrus, IV/			Date (YYYY-MM-DD)	2020-07-31
First Name	Philip	Last Name	Burrus, IV	Registration Number	45432

Additional Signature may be generated within this form by selecting the Add button.

Approved for use through 04/30/2017. OMB 0651-0032
U.S. Patent and Trademark Office; U.S. DEPARTMENT OF COMMERCE
Under the Paperwork Reduction Act of 1995, no persons are required to respond to a collection of information unless it contains a valid OMB control number.

Application Data Sheet 37 CFR 1.76	Attorney Docket Number	10055UCIP2D1C1C1C1C1C1
	Application Number	
Title of Invention	Catheter Tray, Packaging System, Instruction Insert, and Associated Methods	

This collection of information is required by 37 CFR 1.76. The information is required to obtain or retain a benefit by the public which is to file (and by the USPTO to process) an application. Confidentiality is governed by 35 U.S.C. 122 and 37 CFR 1.14. This collection is estimated to take 23 minutes to complete, including gathering, preparing, and submitting the completed application data sheet form to the USPTO. Time will vary depending upon the individual case. Any comments on the amount of time you require to complete this form and/or suggestions for reducing this burden, should be sent to the Chief Information Officer, U.S. Patent and Trademark Office, U.S. Department of Commerce, P.O. Box 1450, Alexandria, VA 22313-1450. DO NOT SEND FEES OR COMPLETED FORMS TO THIS ADDRESS. **SEND TO: Commissioner for Patents, P.O. Box 1450, Alexandria, VA 22313-1450.**

Privacy Act Statement

The Privacy Act of 1974 (P.L. 93-579) requires that you be given certain information in connection with your submission of the attached form related to a patent application or patent. Accordingly, pursuant to the requirements of the Act, please be advised that: (1) the general authority for the collection of this information is 35 U.S.C. 2(b)(2); (2) furnishing of the information solicited is voluntary; and (3) the principal purpose for which the information is used by the U.S. Patent and Trademark Office is to process and/or examine your submission related to a patent application or patent. If you do not furnish the requested information, the U.S. Patent and Trademark Office may not be able to process and/or examine your submission, which may result in termination of proceedings or abandonment of the application or expiration of the patent.

The information provided by you in this form will be subject to the following routine uses:

1 The information on this form will be treated confidentially to the extent allowed under the Freedom of Information Act (5 U.S.C. 552) and the Privacy Act (5 U.S.C. 552a). Records from this system of records may be disclosed to the Department of Justice to determine whether the Freedom of Information Act requires disclosure of these records.

2. A record from this system of records may be disclosed, as a routine use, in the course of presenting evidence to a court, magistrate, or administrative tribunal, including disclosures to opposing counsel in the course of settlement negotiations.

3 A record in this system of records may be disclosed, as a routine use, to a Member of Congress submitting a request involving an individual, to whom the record pertains, when the individual has requested assistance from the Member with respect to the subject matter of the record.

4. A record in this system of records may be disclosed, as a routine use, to a contractor of the Agency having need for the information in order to perform a contract. Recipients of information shall be required to comply with the requirements of the Privacy Act of 1974, as amended, pursuant to 5 U.S.C. 552a(m).

5. A record related to an International Application filed under the Patent Cooperation Treaty in this system of records may be disclosed, as a routine use, to the International Bureau of the World Intellectual Property Organization, pursuant to the Patent CooperationTreaty.

6. A record in this system of records may be disclosed, as a routine use, to another federal agency for purposes of National Security review (35 U.S.C. 181) and for review pursuant to the Atomic Energy Act (42 U.S.C. 218(c)).

7. A record from this system of records may be disclosed, as a routine use, to the Administrator, General Services, or his/her designee, during an inspection of records conducted by GSA as part of that agency's responsibility to recommend improvements in records management practices and programs, under authority of 44 U.S.C. 2904 and 2906. Such disclosure shall be made in accordance with the GSA regulations governing inspection of records for this purpose, and any other relevant (i.e., GSA or Commerce) directive. Such disclosure shall not be used to make determinations about individuals.

8. A record from this system of records may be disclosed, as a routine use, to the public after either publication of the application pursuant to 35 U.S.C. 122(b) or issuance of a patent pursuant to 35 U.S.C. 151. Further, a record may be disclosed, subject to the limitations of 37 CFR 1.14, as a routine use, to the public if the record was filed in an application which became abandoned or in which the proceedings were terminated and which application is referenced by either a published application, an application open to public inspections or an issued patent.

9. A record from this system of records may be disclosed, as a routine use, to a Federal, State, or local law enforcement agency, if the USPTO becomes aware of a violation or potential violation of law or regulation.

Electronic Patent Application Fee Transmittal

Application Number:	16944667
Filing Date:	31-Jul-2020
Title of Invention:	Catheter Tray, Packaging System, Instruction Insert, and Associated Methods
First Named Inventor/Applicant Name:	Jennifer E. Tomes
Filer:	Philip Henry Burrus/Kayla Burrus
Attorney Docket Number:	10055UCIP2D1C1C1C1C1C1

Filed as Large Entity

Filing Fees for Utility under 35 USC 111(a)

Description	Fee Code	Quantity	Amount	Sub-Total in USD($)
Basic Filing:				
Pages:				
Claims:				
Miscellaneous-Filing:				
PROCESSING FEE, EXCEPT PROV. APPLS.	1830	1	140	140
Petition:				
Patent-Appeals-and-Interference:				
Post-Allowance-and-Post-Issuance:				

Description	Fee Code	Quantity	Amount	Sub-Total in USD($)
Extension-of-Time:				
Miscellaneous:				
			Total in USD ($)	**140**

Electronic Acknowledgement Receipt

EFS ID:	40372430
Application Number:	16944667
International Application Number:	
Confirmation Number:	8322
Title of Invention:	Catheter Tray, Packaging System, Instruction Insert, and Associated Methods
First Named Inventor/Applicant Name:	Jennifer E. Tomes
Customer Number:	27939
Filer:	Philip Henry Burrus/Kayla Burrus
Filer Authorized By:	Philip Henry Burrus
Attorney Docket Number:	10055UCIP2D1C1C1C1C1C1
Receipt Date:	01-SEP-2020
Filing Date:	31-JUL-2020
Time Stamp:	14:33:25
Application Type:	Utility under 35 USC 111(a)

Payment information:

Submitted with Payment	yes
Payment Type	CARD
Payment was successfully received in RAM	$140
RAM confirmation Number	E202091E33386256
Deposit Account	
Authorized User	
The Director of the USPTO is hereby authorized to charge indicated fees and credit any overpayment as follows:	

File Listing:

Document Number	Document Description	File Name	File Size(Bytes)/ Message Digest	Multi Part /.zip	Pages (if appl.)
1	Request for Corrected Filing Receipt	10055U_CIP2_D1C1C1C1C1C1_USA_2020-8-25_CorrectedRilingReceiptRequest.pdf	105992 23e44bf28e300892a2913b0f76ce3b3cd5bc76ae	no	2
Warnings:					
Information:					
2	Application Data Sheet	10055U_CIP2_D1_C1C1C1C1C1_USA_2020-9-1_ADS_Corrected_print.pdf	1265120 be83eeb69f71e404ac89a8087746c471ab042dbd	no	12
Warnings:					
Information:					
This is not an USPTO supplied ADS fillable form					
3	Fee Worksheet (SB06)	fee-info.pdf	30922 690cf0fae40f4ab144fd5db5c5f725c04f23d7a8	no	2
Warnings:					
Information:					
		Total Files Size (in bytes):	1402034		

This Acknowledgement Receipt evidences receipt on the noted date by the USPTO of the indicated documents, characterized by the applicant, and including page counts, where applicable. It serves as evidence of receipt similar to a Post Card, as described in MPEP 503.

<u>New Applications Under 35 U.S.C. 111</u>
If a new application is being filed and the application includes the necessary components for a filing date (see 37 CFR 1.53(b)-(d) and MPEP 506), a Filing Receipt (37 CFR 1.54) will be issued in due course and the date shown on this Acknowledgement Receipt will establish the filing date of the application.
<u>National Stage of an International Application under 35 U.S.C. 371</u>
If a timely submission to enter the national stage of an international application is compliant with the conditions of 35 U.S.C. 371 and other applicable requirements a Form PCT/DO/EO/903 indicating acceptance of the application as a national stage submission under 35 U.S.C. 371 will be issued in addition to the Filing Receipt, in due course.
<u>New International Application Filed with the USPTO as a Receiving Office</u>
If a new international application is being filed and the international application includes the necessary components for an international filing date (see PCT Article 11 and MPEP 1810), a Notification of the International Application Number and of the International Filing Date (Form PCT/RO/105) will be issued in due course, subject to prescriptions concerning national security, and the date shown on this Acknowledgement Receipt will establish the international filing date of the application.

UNITED STATES PATENT AND TRADEMARK OFFICE

UNITED STATES DEPARTMENT OF COMMERCE
United States Patent and Trademark Office
Address: COMMISSIONER FOR PATENTS
P.O. Box 1450
Alexandria, Virginia 22313-1450
www.uspto.gov

APPLICATION NUMBER	FILING or 371(c) DATE	GRP ART UNIT	FIL FEE REC'D	ATTY.DOCKET.NO	TOT CLAIMS	IND CLAIMS
16/944,667	07/31/2020	3736	1720	10055UCIP2D1C1C1C1C1C1	20	3

CONFIRMATION NO. 8322

CORRECTED FILING RECEIPT

27939
Philip H. Burrus, IV
Burrus Intellectual Property Law Group LLC
222 12th Street NE
Suite 1803
Atlanta, GA 30309

Date Mailed: 09/09/2020

Receipt is acknowledged of this non-provisional utility patent application. The application will be taken up for examination in due course. Applicant will be notified as to the results of the examination. Any correspondence concerning the application must include the following identification information: the U.S. APPLICATION NUMBER, FILING DATE, NAME OF FIRST INVENTOR, and TITLE OF INVENTION. Fees transmitted by check or draft are subject to collection.

Please verify the accuracy of the data presented on this receipt. If an error is noted on this Filing Receipt, please submit a written request for a corrected Filing Receipt, including a properly marked-up ADS showing the changes with strike-through for deletions and underlining for additions. If you received a "Notice to File Missing Parts" or other Notice requiring a response for this application, please submit any request for correction to this Filing Receipt with your reply to the Notice. When the USPTO processes the reply to the Notice, the USPTO will generate another Filing Receipt incorporating the requested corrections provided that the request is grantable.

Inventor(s)

Jennifer E. Tomes, Mundelein, IL;
Sarah Dickinson, Chicago, IL;
Deborah Adler, New York, NY;
Jack Maze, Long Grove, IL;
Alberto Savage, Buffalo Grove, IL;
Kenneth Chua, Glenview, IL;
Earl Wilson, Ingleside, IL;
John Kutsch, Harvard, IL;

Applicant(s)

Medline Industries, Inc, Northfied, IL;

Power of Attorney: The patent practitioners associated with Customer Number 27939

Domestic Priority data as claimed by applicant

This application is a CON of 16/833,575 03/28/2020
which is a CON of 15/684,787 08/23/2017 PAT 10640243
which is a CON of 14/793,455 07/07/2015 PAT 9745088
which is a CON of 13/860,902 04/11/2013 PAT 9522753
which is a DIV of 13/155,026 06/07/2011 PAT 8448786
which claims benefit of 61/352,140 06/07/2010
and claims benefit of 61/352,155 06/07/2010
and claims benefit of 61/428,944 12/31/2010
and claims benefit of 61/437,796 01/31/2011

and is a CON of 12/495,148 06/30/2009 PAT 8631935
and is a CIP of 12/647,515 12/27/2009 ABN
and is a CIP of 13/153,265 06/03/2011 PAT 9795761
and is a CIP of 13/153,300 06/03/2011 ABN
and said 12/495,148 06/30/2009
claims benefit of 61/183,629 06/03/2009

Foreign Applications for which priority is claimed (You may be eligible to benefit from the **Patent Prosecution Highway** program at the USPTO. Please see http://www.uspto.gov for more information.) - None.
Foreign application information must be provided in an Application Data Sheet in order to constitute a claim to foreign priority. See 37 CFR 1.55 and 1.76.

Permission to Access Application via Priority Document Exchange: Yes

Permission to Access Search Results: Yes

Applicant may provide or rescind an authorization for access using Form PTO/SB/39 or Form PTO/SB/69 as appropriate.

If Required, Foreign Filing License Granted: 08/07/2020

The country code and number of your priority application, to be used for filing abroad under the Paris Convention, is **US 16/944,667**

Projected Publication Date: 12/10/2020

Non-Publication Request: No

Early Publication Request: No

Title

Catheter Tray, Packaging System, Instruction Insert, and Associated Methods

Preliminary Class

206

Statement under 37 CFR 1.55 or 1.78 for AIA (First Inventor to File) Transition Applications: No

PROTECTING YOUR INVENTION OUTSIDE THE UNITED STATES

Since the rights granted by a U.S. patent extend only throughout the territory of the United States and have no effect in a foreign country, an inventor who wishes patent protection in another country must apply for a patent in a specific country or in regional patent offices. Applicants may wish to consider the filing of an international application under the Patent Cooperation Treaty (PCT). An international (PCT) application generally has the same effect as a regular national patent application in each PCT-member country. The PCT process **simplifies** the filing of patent applications on the same invention in member countries, but **does not result** in a grant of "an international patent" and does not eliminate the need of applicants to file additional documents and fees in countries where patent protection is desired.

Almost every country has its own patent law, and a person desiring a patent in a particular country must make an application for patent in that country in accordance with its particular laws. Since the laws of many countries differ in various respects from the patent law of the United States, applicants are advised to seek guidance from specific foreign countries to ensure that patent rights are not lost prematurely.

Bard Exhibit 1004.0234

Applicants also are advised that in the case of inventions made in the United States, the Director of the USPTO must issue a license before applicants can apply for a patent in a foreign country. The filing of a U.S. patent application serves as a request for a foreign filing license. The application's filing receipt contains further information and guidance as to the status of applicant's license for foreign filing.

Applicants may wish to consult the USPTO booklet, "General Information Concerning Patents" (specifically, the section entitled "Treaties and Foreign Patents") for more information on timeframes and deadlines for filing foreign patent applications. The guide is available either by contacting the USPTO Contact Center at 800-786-9199, or it can be viewed on the USPTO website at http://www.uspto.gov/web/offices/pac/doc/general/index.html.

For information on preventing theft of your intellectual property (patents, trademarks and copyrights), you may wish to consult the U.S. Government website, http://www.stopfakes.gov. Part of a Department of Commerce initiative, this website includes self-help "toolkits" giving innovators guidance on how to protect intellectual property in specific countries such as China, Korea and Mexico. For questions regarding patent enforcement issues, applicants may call the U.S. Government hotline at 1-866-999-HALT (1-866-999-4258).

LICENSE FOR FOREIGN FILING UNDER

Title 35, United States Code, Section 184

Title 37, Code of Federal Regulations, 5.11 & 5.15

GRANTED

The applicant has been granted a license under 35 U.S.C. 184, if the phrase "IF REQUIRED, FOREIGN FILING LICENSE GRANTED" followed by a date appears on this form. Such licenses are issued in all applications where the conditions for issuance of a license have been met, regardless of whether or not a license may be required as set forth in 37 CFR 5.15. The scope and limitations of this license are set forth in 37 CFR 5.15(a) unless an earlier license has been issued under 37 CFR 5.15(b). The license is subject to revocation upon written notification. The date indicated is the effective date of the license, unless an earlier license of similar scope has been granted under 37 CFR 5.13 or 5.14.

This license is to be retained by the licensee and may be used at any time on or after the effective date thereof unless it is revoked. This license is automatically transferred to any related applications(s) filed under 37 CFR 1.53(d). This license is not retroactive.

The grant of a license does not in any way lessen the responsibility of a licensee for the security of the subject matter as imposed by any Government contract or the provisions of existing laws relating to espionage and the national security or the export of technical data. Licensees should apprise themselves of current regulations especially with respect to certain countries, of other agencies, particularly the Office of Defense Trade Controls, Department of State (with respect to Arms, Munitions and Implements of War (22 CFR 121-128)); the Bureau of Industry and Security, Department of Commerce (15 CFR parts 730-774); the Office of Foreign AssetsControl, Department of Treasury (31 CFR Parts 500+) and the Department of Energy.

NOT GRANTED

No license under 35 U.S.C. 184 has been granted at this time, if the phrase "IF REQUIRED, FOREIGN FILING LICENSE GRANTED" DOES NOT appear on this form. Applicant may still petition for a license under 37 CFR 5.12, if a license is desired before the expiration of 6 months from the filing date of the application. If 6 months has lapsed

Bard Exhibit 1004.0235

from the filing date of this application and the licensee has not received any indication of a secrecy order under 35 U.S.C. 181, the licensee may foreign file the application pursuant to 37 CFR 5.15(b).

SelectUSA

The United States represents the largest, most dynamic marketplace in the world and is an unparalleled location for business investment, innovation, and commercialization of new technologies. The U.S. offers tremendous resources and advantages for those who invest and manufacture goods here. Through SelectUSA, our nation works to promote and facilitate business investment. SelectUSA provides information assistance to the international investor community; serves as an ombudsman for existing and potential investors; advocates on behalf of U.S. cities, states, and regions competing for global investment; and counsels U.S. economic development organizations on investment attraction best practices. To learn more about why the United States is the best country in the world to develop technology, manufacture products, deliver services, and grow your business, visit http://www.SelectUSA.gov or call +1-202-482-6800.

Bard Exhibit 1004.0236

UNITED STATES PATENT AND TRADEMARK OFFICE

UNITED STATES DEPARTMENT OF COMMERCE
United States Patent and Trademark Office
Address: COMMISSIONER FOR PATENTS
P.O. Box 1450
Alexandria, Virginia 22313-1450
www.uspto.gov

APPLICATION NUMBER	FILING OR 371(C) DATE	FIRST NAMED APPLICANT	ATTY. DOCKET NO./TITLE
16/944,667	07/31/2020	Jennifer E. Tomes	10055UCIP2D1C1C1C1C1C1

CONFIRMATION NO. 8322

PUBLICATION NOTICE

OC000000121932238

27939
Philip H. Burrus, IV
Burrus Intellectual Property Law Group LLC
222 12th Street NE
Suite 1803
Atlanta, GA 30309

Title: Catheter Tray, Packaging System, Instruction Insert, and Associated Methods

Publication No.US-2020-0385153-A1
Publication Date:12/10/2020

NOTICE OF PUBLICATION OF APPLICATION

The above-identified application will be electronically published as a patent application publication pursuant to 37 CFR 1.211, et seq. The patent application publication number and publication date are set forth above.

The publication may be accessed through the USPTO's publically available Searchable Databases via the Internet at www.uspto.gov. The direct link to access the publication is currently http://www.uspto.gov/patft/.

The publication process established by the Office does not provide for mailing a copy of the publication to applicant. A copy of the publication may be obtained from the Office upon payment of the appropriate fee set forth in 37 CFR 1.19(a)(1). Orders for copies of patent application publications are handled by the USPTO's Public Records Division. The Public Records Division can be reached by telephone at (571) 272-3150 or (800) 972-6382, by facsimile at (571) 273-3250, by mail addressed to the United States Patent and Trademark Office, Public Records Division, Alexandria, VA 22313-1450 or via the Internet.

In addition, information on the status of the application, including the mailing date of Office actions and the dates of receipt of correspondence filed in the Office, may also be accessed via the Internet through the Patent Electronic Business Center at www.uspto.gov using the public side of the Patent Application Information and Retrieval (PAIR) system. The direct link to access this status information is currently https://portal.uspto.gov/pair/PublicPair. Prior to publication, such status information is confidential and may only be obtained by applicant using the private side of PAIR.

Further assistance in electronically accessing the publication, or about PAIR, is available by calling the Patent Electronic Business Center at 1-866-217-9197.

Office of Data Managment, Application Assistance Unit (571) 272-4000, or (571) 272-4200, or 1-888-786-0101

Bard Exhibit 1004.0237

IN THE UNITED STATES PATENT AND TRADEMARK OFFICE

Serial No:	16/944,677
Examiner:	Unknown
Art Group:	3736
Reference No.:	BPMDL0005JT.D1.C1.C1.C1.C1.C1
	(10055U D1 C1 C1 C1 C1 C1)
Appn. Filed:	July 31, 2020
First Inventor:	Tomes, Jennifer et al.

Title: Catheter Tray, Packaging System, Instruction Insert, and Associated Methods

May 24, 2021

Commissioner for Patents
P.O. Box 1450
Alexandria, Virginia 22313-1450
Box: Amendment

This preliminary amendment is being filed prior to any Office Action being mailed in this matter. Entry of this paper into the file is respectfully requested.

Bard Exhibit 1004.0238

CLAIMS:

Listing of the claims:

1. (Currently Amended) A medical procedure kit, comprising:

a ~~single layer~~ tray having a first compartment for receiving one or more syringes and a second compartment for receiving a medical assembly, the second compartment bounded by a surface defining an opening allowing access to the second compartment;

a first syringe and a second syringe disposed within the ~~single layer~~ tray in accordance with an order of their use during a catheterization procedure;

at least a portion of the medical assembly dispowed within the second compartment, wherein the medical assembly comprises a coiled tubing coupled between a fluid drain bag and a Foley cathether; and

an outer packaging disposed about the tray;

wherein:

one of the first syringe or the second syringe contains ~~with at least one syringe of the first syringe or the second syringe disposed within the first compartment with the first compartment defining a~~ lubricating jelly ~~application chamber configured to receive lubricating jelly from one of the first syringe or the second syringe for application of the lubricating jelly to at least a portion of the medical assembly~~;

another of the first syringe or the second syringe contains water; and

the first compartment defines one or more contours for accommodating one or more of the first syringe or the second syringe

~~the medical assembly disposed in the second compartment, wherein the medical assembly comprises a coiled tubing coupled between a fluid drain bag and a Foley catheter;~~

~~at least one layer of wrap material enclosing the single layer tray within one or more folds of the at least one layer of wrap material; and~~

~~an outer packaging disposed about both the single layer tray and the at least one layer of wrap material~~.

2. (Currently Amended) The medical procedure kit of claim 1, wherein the ~~at least~~ one ~~syringe~~ of the first syringe or the second syringe comprises the first syringe and the first syringe contains the lubricating jelly.
3. (Currently Amended) The medical procedure kit of claim 2, wherein the second syringe contains the water.
4. (Currently Amended) The medical procedure kit of claim 3, wherein the second syringe is ~~it at least partially~~ disposed in the ~~second~~ same compartment.
5. (Original) The medical procedure kit of claim 3, wherein the first compartment is adjacent to, and separated by a wall from, the second compartment.
6. (Currently Amended) The medical procedure kit of claim 5, wherein the lubricating jelly ~~application chamber~~ is configured to lubricate at least a portion of the medical assembly when the lubricating jelly is dispensed into the tray and the portion of the medical assembly is passed into the lubricating jelly ~~from the first compartment to the second compartment~~.
7. (Currently Amended) The medical procedure kit of claim 6, further comprising one or more swabsticks disposed within the ~~single layer~~ tray.

8. (Currently Amended) A medical procedure kit, comprising

a ~~single layer~~ tray ~~having~~ comprising a first compartment ~~for receiving one or more syringes~~ and a lubricating jelly application chamber separated by a wall, with an opening allowing access to the lubricating jelly application chamber ~~second compartment for receiving a medical assembly~~;

a container of lubricating jelly disposed within the tray;

~~a first syringe and a second syringe disposed within the single layer tray in accordance with their order of use during a catheterization procedure, wherein one syringe of the first syringe or the second syringe contains lubricating jelly and is positioned in the first compartment with the first compartment defining a lubricating jelly application chamber configured to receive the lubricating jelly from the one syringe of the first syringe or the second syringe for application of the lubricating jelly to at least a portion of the medical assembly;~~

~~the medical assembly disposed in the second compartment, wherein the medical assembly comprises~~ a coiled tubing coupled between a fluid drain bag and a Foley catheter;

at least one layer of wrap material enclosing the ~~single layer~~ tray within one or more folds of the at least one layer of wrap material; and

an outer packaging disposed about both the ~~single layer~~ tray and the at least one layer of wrap material;

wherein:

the coiled tubing, the fluid drain bag, and the Foley catheter are disposed within the medical procedure kit; and

the lubricating jelly application chamber is configured to receive lubricating jelly from the container of lubricating jelly for lubricating at least a portion of the Foley catheter with the lubricating jelly.

9. (Currently Amended) The medical procedure kit of claim 8, wherein the lubricating jelly application chamber is configured to apply the lubricating jelly to the ~~at least a~~ portion of the Foley catheter when the portion of the Foley catheter is passed through the opening into the lubricating jelly application chamber ~~from the first compartment to the second compartment~~.

10. (Currently Amended) The medical procedure kit of claim 9, further comprising one or more swabsticks disposed within the ~~single layer~~ tray.

11. (Currently Amended) The medical procedure kit of claim 10, further comprising a container of ~~wherein another syringe of the first syringe or the second syringe contains~~ water.

12. (Currently Amended) The medical procedure kit of claim 11, wherein the container of water contains sterile water ~~another syringe of the first syringe or the second syringe is at least partially positioned in the second compartment~~.

13. (Currently Amended) The medical procedure kit of claim 11, wherein the first compartment is adjacent to the lubricating jelly application chamber ~~second compartment~~.

14. (Currently Amended) A medical procedure kit, comprising:

a tray having a first compartment, a second compartment, and a third compartment, the first compartment being sepearated from the second compartment by a wall ~~for receiving a coiled tubing coupled between a fluid drain bag and a Foley catheter~~;

a first syringe and a second syringe disposed within the tray;

a Foley catheter coupled to a fluid drain bag via a coiled tubing, the Foley catheter disposed within the second compartment of the tray; and

one or more swabsticks disposed within the third compartment;

~~at least one layer of wrap material enclosing the tray within one or more folds of the at least one layer of wrap material; and~~

~~an outer packaging disposed about both the tray and the at least one layer of wrap material,~~ wherein:

~~the first syringe and the second syringe are ordered within the tray in accordance with their use during a catheterization procedure;~~

~~the tray comprises a surface defining at least two compartments separated by a wall, the at least two compartments comprising a first compartment to support at least the second syringe and a second compartment to support the fluid drain bag;~~

~~the first compartment comprising a base member indicating which of the first syringe or the second syringe should be used in the catheterization procedure; and~~

~~the first~~ a compartment of the tray ~~defining~~ defines a lubricating jelly application chamber to lubricate at least a portion of the Foley catheter; and

the tray defines an opening through which one or more of the Foley catheter or the coiled tubing can be passed into ~~receive lubricating jelly from the second syringe for application of~~ the lubricating jelly application chamber to lubricate to ~~at least a~~ the portion of the Foley catheter.

15. (Original) The medical procedure kit of claim 14, the tray comprising a single layer tray.
16. (Currently Amended) The medical procedure kit of claim 15, the ~~further comprising~~ one or more swabsticks comprising a plurality of swabsticks ~~positioned within the single layer tray~~.
17. (Canceled)
18. (Original) The medical procedure kit of claim 14, wherein the first compartment and the second compartment are adjacent.
19. (Original) The medical procedure kit of claim 18, further comprising a wall separating the first compartment from the second compartment.
20. (Original) The medical procedure kit of claim 19, the first compartment comprising one or more contours for accommodating flanges of one or more of the first syringe or the second syringe.
21. (New) A Foley catheter kit, comprising:

a surface defining a tray comprising at least two compartments at least partially separated by a barrier, the at least two compartments being open via a top opening of the tray;

a first syringe disposed in a first compartment of the at least two compartments;

a second syringe disposed within the tray;

a Foley catheter coupled to a coiled tubing and a fluid drain bag, with the Foley catheter being disposed within a second compartment of the at least two compartments;

the surface defining a lubricating jelly application chamber to lubricate at least a portion of the Foley catheter when the portion of the Foley catheter is passed through an opening defined by a barrier bounding the lubricating jelly application chamber into the lubricating jelly application chamber;

one or more swabsticks disposed in a third compartment defined by the surface of the tray; and

a wrap folded about the tray.

REMARKS – General

Voluntary amendments have been made above to more particularly set forth particular aspects of the claimed invention. It is respectfully submitted that support for each amendment above is found in the application as originally filed, with no new matter being added by way of amendment. Entry of this paper into the file is respectfully requested.

CONCLUSION

Applicant believes this application is now in condition for allowance, for which it respectfully submits.

Respectfully submitted,

Philip H. Burrus, IV
Attorney for Applicants
Registration No.: 45,432
404-797-8111
404-880-9912 (fax)
pburrus@burrusiplaw.com

PTO/SB/08a (01-10)
Approved for use through 07/31/2012. OMB 0651-0031
U.S. Patent and Trademark Office; U.S. DEPARTMENT OF COMMERCE

Under the Paperwork Reduction Act of 1995, no persons are required to respond to a collection of information unless it contains a valid OMB control number.

INFORMATION DISCLOSURE STATEMENT BY APPLICANT (Not for submission under 37 CFR 1.99)		
	Application Number	16/944,667
	Filing Date	Jul 31, 2020
	First Named Inventor	Jennifer E. Tomes
	Art Unit	
	Examiner Name	
	Attorney Docket Number	BPMDL0005JT.P2.D1.C1.C1.C1.C1.C1

U.S.PATENTS

Examiner Initial*	Cite No	Patent Number	Kind Code [1]	Issue Date	Name of Patentee or Applicant of cited Document	Pages, Columns, Lines, Where Relevant Passages or Relevant Figures Appear
		5289919		1994-03-01	Fischer	
		10640243		2020- 05-05	Tomes et al.	

U.S.PATENT APPLICATION PUBLICATIONS

Examiner Initial*	Cite No	Publication Number	Kind Code [1]	Publication Date	Name of Patentee or Applicant of cited Document	Pages, Columns, Lines, Where Relevant Passages or Relevant Figures Appear
		20040031721		2004-02-19	Mann, David M.	
		20170202699		2017-07-20	Zani et al.	
		20170216558		2017-08-03	Hughett et al.	
		20170368302		2017-12-18	Brooks, Christopher	
		20190344044		2019-11-14	Dickinson et al.	

FOREIGN PATENT DOCUMENTS

PTO/SB/08a (01-10)
Approved for use through 07/31/2012. OMB 0651-0031
U.S. Patent and Trademark Office; U.S. DEPARTMENT OF COMMERCE

Under the Paperwork Reduction Act of 1995, no persons are required to respond to a collection of information unless it contains a valid OMB control number.

INFORMATION DISCLOSURE STATEMENT BY APPLICANT **(Not for submission under 37 CFR 1.99)**	**Application Number**	16/944,667
	Filing Date	Jul 31, 2020
	First Named Inventor	Jennifer E. Tomes
	Art Unit	
	Examiner Name	
	Attorney Docket Number	BPMDL0005JT.P2.D1.C1.C1.C1.C1.C1.C1

Examiner Initial*	Cite No	Foreign Document Number[3]	Country Code[2]	Kind Code[4]	Publication Date	Name of Patentee or Applicant of cited Document	Pages,Columns,Lines where Relevant Passages or Relevant Figures Appear	T[5]

NON-PATENT LITERATURE DOCUMENTS

Examiner Initials*	Cite No	Include name of the author (in CAPITAL LETTERS), title of the article (when appropriate), title of the item (book, magazine, journal, serial, symposium, catalog, etc.), date, page(s), volume-issue number(s), publisher, city and/or country where published.	T[5]
		"Summons to Attend Oral Proceedings", EP Application 11854003.8; Mailed December 22, 2020; 10055U CIP4 EP,	
		"Summons to Attend Oral Proceedings", EP Application 12792423.1; Mailed December 22, 2020; 10055U CIP6 EP,	
		"Summons to Attend Oral Proceedings", EP Application 12793939.5; Mailed December 23, 2020; 10055U CIP5 EP,	
		ARBLE, JESSICA , "Final OA", USSN 15/977,944; Filed May 11, 2018; Attorney Docket No. 10055U NP1; Mailed August 5, 2020,	
		ARBLE, JESSICA , "NonFinal Office Action", USSN 15/977,944; Filed May 11, 2018; Attorney Docket No. 10055U NP1; Mailed April 28, 2020,	

Under the Paperwork Reduction Act of 1995, no persons are required to respond to a collection of information unless it contains a valid OMB control number.

INFORMATION DISCLOSURE STATEMENT BY APPLICANT (Not for submission under 37 CFR 1.99)		
	Application Number	16/944,667
	Filing Date	Jul 31, 2020
	First Named Inventor	Jennifer E. Tomes
	Art Unit	
	Examiner Name	
	Attorney Docket Number	BPMDL0005JT.P2.D1.C1.C1.C1.C1.C1

		ARBLE, JESSICA , "NonFinal Office Action", USSN 15/977,944; Filed May 11, 2018; Attorney Docket No. 10055U NP1; Mailed February 3, 2021,	
		ARBLE, JESSICA , "Notice of Allowance", USSN 15/977,944; Filed May 11, 2018; Attorney Docket No. 10055U NP1; Mailed August 17, 2021,	
		POON, ROBERT , "NonFinal Office Action", USSN 16/258,231; Filed January 25, 2019; Attorney Docket NO. 10055U D1 C2 C1; Mailed March 31, 2021,	
		POON, ROBERT , "Notice of Allowance", USSN 15/703,514; Filed September 13, 2017; Attorney Docket No. 1037-002-09US; Mailed November 23, 2020,	
		POON, ROBERT , "Notice of Allowance", USSN 15/803,383; Filed November 3, 2017; Attorney Docket No. 1037-002-08US; Mailed November 27, 2020,	

EXAMINER SIGNATURE

Examiner Signature		Date Considered	

*EXAMINER: Initial if reference considered, whether or not citation is in conformance with MPEP 609. Draw line through a citation if not in conformance and not considered. Include copy of this form with next communication to applicant.

PTO/SB/08a (01-10)
Approved for use through 07/31/2012. OMB 0651-0031
U.S. Patent and Trademark Office; U.S. DEPARTMENT OF COMMERCE

Under the Paperwork Reduction Act of 1995, no persons are required to respond to a collection of information unless it contains a valid OMB control number.

INFORMATION DISCLOSURE STATEMENT BY APPLICANT **(Not for submission under 37 CFR 1.99)**	**Application Number**	16/944,667
	Filing Date	Jul 31, 2020
	First Named Inventor	Jennifer E. Tomes
	Art Unit	
	Examiner Name	
	Attorney Docket Number	BPMDL0005JT.P2.D1.C1.C1.C1.C1.C1

[1] See Kind Codes of USPTO Patent Documents at www.USPTO.GOV or MPEP 901.04. [2] Enter office that issued the document, by the two-letter code (WIPO Standard ST.3). [3] For Japanese patent documents, the indication of the year of the reign of the Emperor must precede the serial number of the patent document.
[4] Kind of document by the appropriate symbols as indicated on the document under WIPO Standard ST.16 if possible. [5] Applicant is to place a check mark here if English language translation is attached.

PTO/SB/08a (01-10)
Approved for use through 07/31/2012. OMB 0651-0031
U.S. Patent and Trademark Office; U.S. DEPARTMENT OF COMMERCE

Under the Paperwork Reduction Act of 1995, no persons are required to respond to a collection of information unless it contains a valid OMB control number.

INFORMATION DISCLOSURE STATEMENT BY APPLICANT (Not for submission under 37 CFR 1.99)	**Application Number**	16/944,667
	Filing Date	Jul 31, 2020
	First Named Inventor	Jennifer E. Tomes
	Art Unit	
	Examiner Name	
	Attorney Docket Number	BPMDL0005JT.P2.D1.C1.C1.C1.C1.C1.C1

CERTIFICATION STATEMENT

Please see 37 CFR 1.97 and 1.98 to make the appropriate selection(s):

☐ That each item of information contained in the information disclosure statement was first cited in any communication from a foreign patent office in a counterpart foreign application not more than three months prior to the filing of the information disclosure statement. See 37 CFR 1.97(e) (1).

OR

☐ That no item of information contained in the information disclosure statement was cited in a communication from a foreign patent office in a counterpart foreign application, and, to the knowledge of the person signing the certification after making reasonable inquiry, no item of information contained in the information disclosure statement was known to any individual designated in 37 CFR 1.56(c) more than three months prior to the filing of the information disclosure statement. See 37 CFR 1.97(e) (2).

☐ See attached certification statement.

☐ Fee set forth in 37 CFR 1.17 (p) has been submitted herewith.

☒ None

SIGNATURE

A signature of the applicant or representative is required in accordance with CFR 1.33, 10.18. Please see CFR 1.4(d) for the form of the signature.

Signature	/Philip H. Burrus, IV/	Date (YYYY-MM-DD)	2021-6-22
Name/Print	Philip H. Burrus	Registration Number	45,432

This collection of information is required by 37 CFR 1.97 and 1.98. The information is required to obtain or retain a benefit by the public which is to file (and by the USPTO to process) an application. Confidentiality is governed by 35 U.S.C. 122 and 37 CFR 1.14. This collection is estimated to take 1 hour to complete, including gathering, preparing and submitting the completed application form to the USPTO. Time will vary depending upon the individual case. Any comments on the amount of time you require to complete this form and/or suggestions for reducing this burden, should be sent to the Chief Information Officer, U.S. Patent and Trademark Office, U.S. Department of Commerce, P.O. Box 1450, Alexandria, VA 22313-1450. DO NOT SEND FEES OR COMPLETED FORMS TO THIS ADDRESS. **SEND TO: Commissioner for Patents, P.O. Box 1450, Alexandria, VA 22313-1450.**

Electronic Patent Application Fee Transmittal

Application Number:	16944667
Filing Date:	31-Jul-2020
Title of Invention:	Catheter Tray, Packaging System, Instruction Insert, and Associated Methods
First Named Inventor/Applicant Name:	Jennifer E. Tomes
Filer:	Philip Henry Burrus/Kayla Burrus
Attorney Docket Number:	10055UCIP2D1C1C1C1C1C1

Filed as Large Entity

Filing Fees for Utility under 35 USC 111(a)

Description	Fee Code	Quantity	Amount	Sub-Total in USD($)
Basic Filing:				
Pages:				
Claims:				
INDEPENDENT CLAIMS IN EXCESS OF 3	1201	1	480	480
Miscellaneous-Filing:				
Petition:				
Patent-Appeals-and-Interference:				
Post-Allowance-and-Post-Issuance:				

Description	Fee Code	Quantity	Amount	Sub-Total in USD($)
Extension-of-Time:				
Miscellaneous:				
			Total in USD ($)	**480**

Electronic Acknowledgement Receipt	
EFS ID:	43059385
Application Number:	16944667
International Application Number:	
Confirmation Number:	8322
Title of Invention:	Catheter Tray, Packaging System, Instruction Insert, and Associated Methods
First Named Inventor/Applicant Name:	Jennifer E. Tomes
Customer Number:	27939
Filer:	Philip Henry Burrus/Kayla Burrus
Filer Authorized By:	Philip Henry Burrus
Attorney Docket Number:	10055UCIP2D1C1C1C1C1C1
Receipt Date:	22-JUN-2021
Filing Date:	31-JUL-2020
Time Stamp:	19:39:45
Application Type:	Utility under 35 USC 111(a)

Payment information:

Submitted with Payment	yes
Payment Type	CARD
Payment was successfully received in RAM	$480
RAM confirmation Number	E20216LJ39563631
Deposit Account	
Authorized User	
The Director of the USPTO is hereby authorized to charge indicated fees and credit any overpayment as follows:	

File Listing:

Document Number	Document Description	File Name	File Size(Bytes)/ Message Digest	Multi Part /.zip	Pages (if appl.)
1		10055U_P2D1C1C1C1C1C1_USA_2021-5-24_PreliminaryAmendment.pdf	125899 132cadd900fb740d30fe3131a936219678444ee7	yes	10
	Multipart Description/PDF files in .zip description				
	Document Description		**Start**	**End**	
	Preliminary Amendment		1	1	
	Claims		2	8	
	Applicant Arguments/Remarks Made in an Amendment		9	10	
Warnings:					
Information:					
2	Information Disclosure Statement (IDS) Form (SB08)	10055U_CIP2_D1_C1C1C1C1C1_USA_2021-6-22_IDS.pdf	149210 4659cfd1a31019663118f0dc73c0593b3def599d	no	5
Warnings:					
Information:					
This is not an USPTO supplied IDS fillable form					
3	Non Patent Literature	1037-002-08US_2020-11-27_NoticeOfAllowance.pdf	634850 f336a631ec7ff1bfa0d5707ab1e4350faae25a4a	no	5
Warnings:					
Information:					
4	Non Patent Literature	1037-002-09US_2020-11-23_NoticeOfAllowance.pdf	726964 474a3dca54d55b64042654b179cd0c71307cb98c	no	7
Warnings:					
Information:					

5	Non Patent Literature	10055U_CIP4_EP_2020-12-22_SummonsToAttendOralHearing.pdf	554374 187eb65ddf60dd85caaaa8fe845141f2c818a92c	no	7
Warnings:					
Information:					
6	Non Patent Literature	10055U_CIP5_EP_2020-12-23_SummonsToAttendOralHearing.pdf	544992 b9e8a65a2d4c4a3d38dc28305066f96ed4561f09	no	7
Warnings:					
Information:					
7	Non Patent Literature	10055U_CIP6_EP_2020-12-22_SummonsToAttendOralHearing.pdf	430654 e087bbd5f9f79374227bd9d9b954fa80fe55542a	no	6
Warnings:					
Information:					
8	Non Patent Literature	10055U_D1_C2_C1_USA_2020-7-15_FinalOA.pdf	832390 499f75a793b2b3e7b7b4f6247053e8db47a159dd	no	11
Warnings:					
Information:					
9	Non Patent Literature	10055U_D1_C2_C1_USA_2021-3-31_NonFinalOA.pdf	858180 ad8823a560a8d8bce91ed17c8c918f5b9c12a444	no	12
Warnings:					
Information:					
10	Non Patent Literature	10055U_NP1_USA_2020-4-28_NonFinalOA.pdf	878960 18c5ea9155be1e99d7dd802e0014a9c5ce9e7222	no	11
Warnings:					
Information:					
11	Non Patent Literature	10055U_NP1_USA_2020-8-5_FinalOA.pdf	1137391 556f70c42b89f35a4ad78551325bb9fa0fe047bb	no	14
Warnings:					
Information:					

12	Non Patent Literature	10055U_NP1_USA_2021-2-3_NonFinalOA.pdf	1220354 23a8363845f84b709c5268b80f67aa45e08f10d3	no	16
Warnings:					
Information:					
13	Non Patent Literature	10055U_NP1_USA_2021-5-17_NoticeOfAllowance.pdf	979502 2231474f0623ba00e1042ed7ee06874c81f206bb	no	11
Warnings:					
Information:					
14	Fee Worksheet (SB06)	fee-info.pdf	30806 687c88c459b068dd04820fcbdba1e46946fc18a7	no	2
Warnings:					
Information:					
			Total Files Size (in bytes):	9104526	

This Acknowledgement Receipt evidences receipt on the noted date by the USPTO of the indicated documents, characterized by the applicant, and including page counts, where applicable. It serves as evidence of receipt similar to a Post Card, as described in MPEP 503.

<u>New Applications Under 35 U.S.C. 111</u>
If a new application is being filed and the application includes the necessary components for a filing date (see 37 CFR 1.53(b)-(d) and MPEP 506), a Filing Receipt (37 CFR 1.54) will be issued in due course and the date shown on this Acknowledgement Receipt will establish the filing date of the application.
<u>National Stage of an International Application under 35 U.S.C. 371</u>
If a timely submission to enter the national stage of an international application is compliant with the conditions of 35 U.S.C. 371 and other applicable requirements a Form PCT/DO/EO/903 indicating acceptance of the application as a national stage submission under 35 U.S.C. 371 will be issued in addition to the Filing Receipt, in due course.
<u>New International Application Filed with the USPTO as a Receiving Office</u>
If a new international application is being filed and the international application includes the necessary components for an international filing date (see PCT Article 11 and MPEP 1810), a Notification of the International Application Number and of the International Filing Date (Form PCT/RO/105) will be issued in due course, subject to prescriptions concerning national security, and the date shown on this Acknowledgement Receipt will establish the international filing date of the application.

Doc Code: PA..
Document Description: Power of Attorney

PTO/AIA/82A (07-13)
Approved for use through 11/30/2014. OMB 0651-0051
U.S. Patent and Trademark Office; U.S. DEPARTMENT OF COMMERCE
Under the Paperwork Reduction Act of 1995, no persons are required to respond to a collection of information unless it displays a valid OMB control number.

TRANSMITTAL FOR POWER OF ATTORNEY TO ONE OR MORE REGISTERED PRACTITIONERS

NOTE: This form is to be submitted with the Power of Attorney by Applicant form (PTO/AIA/82B) to identify the application to which the Power of Attorney is directed, in accordance with 37 CFR 1.5, unless the application number and filing date are identified in the Power of Attorney by Applicant form. If neither form PTO/AIA/82A nor form PTO/AIA82B identifies the application to which the Power of Attorney is directed, the Power of Attorney will not be recognized in the application.

Application Number	16944667
Filing Date	July 31, 2020
First Named Inventor	Jennifer E. Tomes
Title	Catheter Tray, Packaging System, Instruction Insert, and Associated Methods
Art Unit	3736
Examiner Name	
Attorney Docket Number	10055UCIP2D1C1C1C1C1C1

SIGNATURE of Applicant or Patent Practitioner

Signature	/Philip H. Burrus, IV/	Date (Optional)	2021-12-03
Name	Philip H. Burrus, IV	Registration Number	45432
Title (if Applicant is a juristic entity)			
Applicant Name (if Applicant is a juristic entity)			

NOTE: This form must be signed in accordance with 37 CFR 1.33. See 37 CFR 1.4(d) for signature requirements and certifications. If more than one applicant, use multiple forms.

☐ *Total of _____ forms are submitted.

This collection of information is required by 37 CFR 1.131, 1.32, and 1.33. The information is required to obtain or retain a benefit by the public which is to file (and by the USPTO to process) an application. Confidentiality is governed by 35 U.S.C. 122 and 37 CFR 1.11 and 1.14. This collection is estimated to take 3 minutes to complete, including gathering, preparing, and submitting the completed application form to the USPTO. Time will vary depending upon the individual case. Any comments on the amount of time you require to complete this form and/or suggestions for reducing this burden, should be sent to the Chief Information Officer, U.S. Patent and Trademark Office, U.S. Department of Commerce, P.O. Box 1450, Alexandria, VA 22313-1450. DO NOT SEND FEES OR COMPLETED FORMS TO THIS ADDRESS. **SEND TO: Commissioner for Patents, P.O. Box 1450, Alexandria, VA 22313-1450.**

If you need assistance in completing the form, call 1-800-PTO-9199 and select option 2.

Doc Code: PA..
Document Description: Power of Attorney

PTO/AIA/82B (07-13)
Approved for use through 11/30/2014. OMB 0651-0051
U.S. Patent and Trademark Office; U.S. DEPARTMENT OF COMMERCE
Under the Paperwork Reduction Act of 1995, no persons are required to respond to a collection of information unless it displays a valid OMB control number

POWER OF ATTORNEY BY APPLICANT

I hereby revoke all previous powers of attorney given in the application identified in either the attached transmittal letter or the boxes below.

Application Number	Filing Date

(Note: The boxes above may be left blank if information is provided on form PTO/AIA/82A.)

☑ I hereby appoint the Patent Practitioner(s) associated with the following Customer Number as my/our attorney(s) or agent(s), and to transact all business in the United States Patent and Trademark Office connected therewith for the application referenced in the attached transmittal letter (form PTO/AIA/82A) or identified above: 27939

OR

☐ I hereby appoint Practitioner(s) named in the attached list (form PTO/AIA/82C) as my/our attorney(s) or agent(s), and to transact all business in the United States Patent and Trademark Office connected therewith for the patent application referenced in the attached transmittal letter (form PTO/AIA/82A) or identified above. (Note: Complete form PTO/AIA/82C.)

Please recognize or change the correspondence address for the application identified in the attached transmittal letter or the boxes above to:

☑ The address associated with the above-mentioned Customer Number

OR

☐ The address associated with Customer Number:

OR

Firm or Individual Name					
Address					
City		State		Zip	
Country					
Telephone		Email			

I am the Applicant (if the Applicant is a juristic entity, list the Applicant name in the box):

Medline Industries, LP

☐ Inventor or Joint Inventor (title not required below)

☐ Legal Representative of a Deceased or Legally Incapacitated Inventor (title not required below)

☑ Assignee or Person to Whom the Inventor is Under an Obligation to Assign (provide signer's title if applicant is a juristic entity)

☐ Person Who Otherwise Shows Sufficient Proprietary Interest (e.g., a petition under 37 CFR 1.46(b)(2) was granted in the application or is concurrently being filed with this document) (provide signer's title if applicant is a juristic entity)

SIGNATURE of Applicant for Patent

The undersigned (whose title is supplied below) is authorized to act on behalf of the applicant (e.g., where the applicant is a juristic entity).

Signature	David Noskowicz	Date (Optional)	11-18-2021
Name	David S. Noskowicz		
Title	Senior Patent Counsel		

NOTE: Signature - This form must be signed by the applicant in accordance with 37 CFR 1.33. See 37 CFR 1.4 for signature requirements and certifications. If more than one applicant, use multiple forms.

☐ Total of forms are submitted.

This collection of information is required by 37 CFR 1.131, 1.32, and 1.33. The information is required to obtain or retain a benefit by the public which is to file (and by the USPTO to process) an application. Confidentiality is governed by 35 U.S.C. 122 and 37 CFR 1.11 and 1.14. This collection is estimated to take 3 minutes to complete, including gathering, preparing, and submitting the completed application form to the USPTO. Time will vary depending upon the individual case. Any comments on the amount of time you require to complete this form and/or suggestions for reducing this burden, should be sent to the Chief Information Officer, U.S. Patent and Trademark Office, U.S. Department of Commerce, P.O. Box 1450, Alexandria, VA 22313-1450. DO NOT SEND FEES OR COMPLETED FORMS TO THIS ADDRESS. **SEND TO: Commissioner for Patents, P.O. Box 1450, Alexandria, VA 22313-1450.**

If you need assistance in completing the form, call 1-800-PTO-9199 and select option 2.

Electronic Acknowledgement Receipt

EFS ID:	44434048
Application Number:	16944667
International Application Number:	
Confirmation Number:	8322
Title of Invention:	Catheter Tray, Packaging System, Instruction Insert, and Associated Methods
First Named Inventor/Applicant Name:	Jennifer E. Tomes
Customer Number:	27939
Filer:	Philip Henry Burrus
Filer Authorized By:	
Attorney Docket Number:	10055UCIP2D1C1C1C1C1C1
Receipt Date:	03-DEC-2021
Filing Date:	31-JUL-2020
Time Stamp:	17:49:31
Application Type:	Utility under 35 USC 111(a)

Payment information:

Submitted with Payment	no

File Listing:

Document Number	Document Description	File Name	File Size(Bytes)/ Message Digest	Multi Part /.zip	Pages (if appl.)
1	Power of Attorney	10055UCIP2D1C1C1C1C1C1_USA_2021-12-3_POA.pdf	284844 6e9005402983546 2e677ac7624276e18fa1f5543	no	2

Warnings:

Information:	
Total Files Size (in bytes):	284844

This Acknowledgement Receipt evidences receipt on the noted date by the USPTO of the indicated documents, characterized by the applicant, and including page counts, where applicable. It serves as evidence of receipt similar to a Post Card, as described in MPEP 503.

New Applications Under 35 U.S.C. 111
If a new application is being filed and the application includes the necessary components for a filing date (see 37 CFR 1.53(b)-(d) and MPEP 506), a Filing Receipt (37 CFR 1.54) will be issued in due course and the date shown on this Acknowledgement Receipt will establish the filing date of the application.
National Stage of an International Application under 35 U.S.C. 371
If a timely submission to enter the national stage of an international application is compliant with the conditions of 35 U.S.C. 371 and other applicable requirements a Form PCT/DO/EO/903 indicating acceptance of the application as a national stage submission under 35 U.S.C. 371 will be issued in addition to the Filing Receipt, in due course.
New International Application Filed with the USPTO as a Receiving Office
If a new international application is being filed and the international application includes the necessary components for an international filing date (see PCT Article 11 and MPEP 1810), a Notification of the International Application Number and of the International Filing Date (Form PCT/RO/105) will be issued in due course, subject to prescriptions concerning national security, and the date shown on this Acknowledgement Receipt will establish the international filing date of the application.

Document Description: Application Data Sheet to update/correct info
Doc Code: ADS.CORR

CORRECTED ADS FORM

Application Number	16944667
Title of Invention	Catheter Tray, Packaging System, Instruction Insert, and Associated Methods

Inventor Information

****If no data is shown, no data has been corrected****

	Data of Record	Updated Data
Order Number		
Name		
Residence Information		
Residency		
City		
State		
Country of Residence		
Mailing Address of Inventor		
Address 1		
Address 2		
City,State/Province, Postal Code		
Country		

Bard Exhibit 1004.0263

Document Description: Application Data Sheet to update/correct info
Doc Code: ADS.CORR

Application Information

	Data of Record	Updated Data
Title of Invention	Catheter Tray, Packaging System, Instruction Insert, and Associated Methods	
Attorney Docket Number	10055UCIP2D1C1C1C1C1C1	
Entity Type	Regular Undiscounted	

Domestic Benefit/National Stage Information

****If no data is shown, no data has been corrected****

This section allows for the applicant to either claim benefit under 35 U.S.C. 119(e), 120, 121,365(c), or 386(c) or indicate National Stage entry from a PCT application. Providing this information in the application data sheet constitutes the specific reference required by 35 U.S. C. 119(e) or 120, and 37 CFR 1.78(a).

		Data of Record	Updated Data
	Prior Application Status		
	Application Number		
	Continuity Type		
	Prior Application Number		
	Filing Date (YYYY-MM-DD)		
	Patent Number		
	Issue Date (YYYY-MM-DD)		

Foreign Priority Information

Bard Exhibit 1004.0264

Document Description: Application Data Sheet to update/correct info
Doc Code: ADS.CORR

****If no data is shown, no data has been corrected****

This section allows for the applicant to claim priority to a foreign application. Providing this information in the application data sheet constitutes the claim for priority as required by 35 U.S.C. 119(b) and 37 CFR 1.55. When priority is claimed to a foreign application that is eligible for retrieval under the priority document exchange program (PDX) the information will be used by the Office to automatically attempt retrieval pursuant to 37 CFR 1.55(i)(1) and (2). Under the PDX program, applicant bears the ultimate responsibility for ensuring that a copy of the foreign application is received by the Office from the participating foreign intellectual property office, or a certified copy of the foreign priority application is filed, within the time period specified in 37 CFR 1.55(g)(1).

		Data of Record	Updated Data
	Application Number		
	Country		
	Filing Date		
	Access Code		

Applicant Information

****If no data is shown, no data has been corrected****
Providing assignment information in this section does not substitute for compliance with any requirement of part 3 of Title 37 of CFR to have an assignment recorded by the Office.

	Data of Record	Updated Data
Applicant Type	ASG	
If applicant is the legal representative, indicate the authority to file the patent application, the inventor is		
Name of the Deceased or Legally Incapacitated Inventor		
Applicant is an Organization	Yes	
Name		
Organization Name	~~Medline Industries, Inc~~	Medline Industries, LP
Address 1		
Address 2		

City,State/Province,Postal Code	Northfied IL	
Country	US	
Phone Number		
Fax Number		
Email Address		

Assignee Information including Non-Applicant Assignee Information

****If no data is shown, no data has been corrected****
Providing this information in the application data sheet does not substitute for compliance with any requirement of part 3 of Title 37 of the CFR to have an assignment recorded in the Office

	Data of Record	Updated Data
Order		
Applicant is an Organization		
Name		
Organization Name		
Mailing Address		
Address 1		
Address 2		
City,State/Province,Postal Code		
Country		
Phone Number		
Fax Number		
Email Address		

Signature

NOTE: This Application Data Sheet must be signed in accordance with 37 CFR 1.33(b).

This Application Data Sheet **must** be signed by a patent practitioner if one or more of the applicants is a **juristic entity** (e.g., corporation or association). If the applicant is two or more joint inventors, this form must be signed by a patent practitioner, **all** joint inventors who are the applicant, or one or more joint inventor-applicants who have been given power of attorney (e.g., see USPTO Form PTO/AIA/81) on behalf of **all** joint inventor-applicants.

See 37 CFR 1.4(d) for the manner of making signatures and certifications.

Signature	/Philip H. Burrus, IV/	Registration Number	45432
First Name	Philip	Last Name	Burrus, IV

IN THE UNITED STATES PATENT AND TRADEMARK OFFICE

Serial No:	16/944,667
Examiner:	Unknown
Art Group:	3736
Reference No.:	10055UCIP2D1C1C1C1C1C1
Appn. Filed:	July 31, 2020
First Inventor:	Jennifer E. Tomes

Title: Catheter Tray, Packaging System, Instruction Insert, and Associated Methods

December 3, 2021

Commissioner for Patents
P.O. Box 1450
Alexandria, Virginia 22313-1450

Request for Corrected Filing Receipt

Submitted herewith is a Supplemental Application Data Sheet for the above-referenced application. At the time of filing, the Applicant was a corporation. The Applicant entity type has changed to a limited partnership and is reflected as such on the amended Application Data Sheet. This change of name was recorded with the United States Patent and Trademark Office on October 31, 2021, at Reel 057977, Frame 0436.

Applicant respectfully requests an updated Filing Receipt. A Power of Attorney from Medline Industries, LP, is concurrently filed.

Bard Exhibit 1004.0268

The Commissioner is hereby authorized to charge any underpayment or credit any overpayment of fees to Deposit Account No. 50-3608.

Respectfully submitted,

Philip H. Burrus, IV
Attorney for Applicant
Registration No.: 45,432
404-797-8111
404-880-9912 (fax)
pburrus@burrusiplaw.com

Electronic Acknowledgement Receipt

EFS ID:	44434027
Application Number:	16944667
International Application Number:	
Confirmation Number:	8322
Title of Invention:	Catheter Tray, Packaging System, Instruction Insert, and Associated Methods
First Named Inventor/Applicant Name:	Jennifer E. Tomes
Customer Number:	27939
Filer:	Philip Henry Burrus
Filer Authorized By:	
Attorney Docket Number:	10055UCIP2D1C1C1C1C1C1
Receipt Date:	03-DEC-2021
Filing Date:	31-JUL-2020
Time Stamp:	17:48:39
Application Type:	Utility under 35 USC 111(a)

Payment information:

Submitted with Payment	no

File Listing:

Document Number	Document Description	File Name	File Size(Bytes)/ Message Digest	Multi Part /.zip	Pages (if appl.)
1	Application Data Sheet to update/ correct info	CorrectedADS.pdf	99709 daede8d5e8f01815e69e2f69128650a86f1c57aa	no	5

Warnings:

Information:					
2	Miscellaneous Incoming Letter	10055UCIP2D1C1C1C1C1C1_USA_2021-12-3_CorrectedFilingReceipt.pdf	104667 379f32c1d274202fef3d8327a8760a3b37f51490	no	2
Warnings:					
Information:					
		Total Files Size (in bytes):	204376		

This Acknowledgement Receipt evidences receipt on the noted date by the USPTO of the indicated documents, characterized by the applicant, and including page counts, where applicable. It serves as evidence of receipt similar to a Post Card, as described in MPEP 503.

New Applications Under 35 U.S.C. 111
If a new application is being filed and the application includes the necessary components for a filing date (see 37 CFR 1.53(b)-(d) and MPEP 506), a Filing Receipt (37 CFR 1.54) will be issued in due course and the date shown on this Acknowledgement Receipt will establish the filing date of the application.
National Stage of an International Application under 35 U.S.C. 371
If a timely submission to enter the national stage of an international application is compliant with the conditions of 35 U.S.C. 371 and other applicable requirements a Form PCT/DO/EO/903 indicating acceptance of the application as a national stage submission under 35 U.S.C. 371 will be issued in addition to the Filing Receipt, in due course.
New International Application Filed with the USPTO as a Receiving Office
If a new international application is being filed and the international application includes the necessary components for an international filing date (see PCT Article 11 and MPEP 1810), a Notification of the International Application Number and of the International Filing Date (Form PCT/RO/105) will be issued in due course, subject to prescriptions concerning national security, and the date shown on this Acknowledgement Receipt will establish the international filing date of the application.

UNITED STATES PATENT AND TRADEMARK OFFICE

UNITED STATES DEPARTMENT OF COMMERCE
United States Patent and Trademark Office
Address: COMMISSIONER FOR PATENTS
P.O. Box 1450
Alexandria, Virginia 22313-1450
www.uspto.gov

APPLICATION NUMBER	FILING OR 371(C) DATE	FIRST NAMED APPLICANT	ATTY. DOCKET NO./TITLE
16/944,667	07/31/2020	Jennifer E. Tomes	10055UCIP2D1C1C1C1C1C1

CONFIRMATION NO. 8322

POA ACCEPTANCE LETTER

OC000000130260051

27939
Philip H. Burrus, IV
Burrus Intellectual Property Law Group LLC
222 12th Street NE
Suite 1803
Atlanta, GA 30309

Date Mailed: 12/07/2021

NOTICE OF ACCEPTANCE OF POWER OF ATTORNEY

This is in response to the Power of Attorney filed 12/03/2021.

The Power of Attorney in this application is accepted. Correspondence in this application will be mailed to the above address as provided by 37 CFR 1.33.

Questions about the contents of this notice and the requirements it sets forth should be directed to the Office of Data Management, Application Assistance Unit, at **(571) 272-4000** or **(571) 272-4200** or **1-888-786-0101**.

/mmasfaw/

Bard Exhibit 1004.0272

UNITED STATES PATENT AND TRADEMARK OFFICE

UNITED STATES DEPARTMENT OF COMMERCE
United States Patent and Trademark Office
Address: COMMISSIONER FOR PATENTS
P.O. Box 1450
Alexandria, Virginia 22313-1450
www.uspto.gov

APPLICATION NUMBER	FILING or 371(c) DATE	GRP ART UNIT	FIL FEE REC'D	ATTY.DOCKET.NO	TOT CLAIMS	IND CLAIMS
16/944,667	07/31/2020	OPAP	2200	10055UCIP2D1C1C1C1C1C1	20	3

CONFIRMATION NO. 8322

CORRECTED FILING RECEIPT

OC000000130280035

27939
Philip H. Burrus, IV
Burrus Intellectual Property Law Group LLC
222 12th Street NE
Suite 1803
Atlanta, GA 30309

Date Mailed: 12/07/2021

Receipt is acknowledged of this non-provisional utility patent application. The application will be taken up for examination in due course. Applicant will be notified as to the results of the examination. Any correspondence concerning the application must include the following identification information: the U.S. APPLICATION NUMBER, FILING DATE, NAME OF FIRST INVENTOR, and TITLE OF INVENTION. Fees transmitted by check or draft are subject to collection.

Please verify the accuracy of the data presented on this receipt. If an error is noted on this Filing Receipt, please submit a written request for a corrected Filing Receipt, including a properly marked-up ADS showing the changes with strike-through for deletions and underlining for additions. If you received a "Notice to File Missing Parts" or other Notice requiring a response for this application, please submit any request for correction to this Filing Receipt with your reply to the Notice. When the USPTO processes the reply to the Notice, the USPTO will generate another Filing Receipt incorporating the requested corrections provided that the request is grantable.

Inventor(s)

Jennifer E. Tomes, Mundelein, IL;
Sarah Dickinson, Chicago, IL;
Deborah Adler, New York, NY;
Jack Maze, Long Grove, IL;
Alberto Savage, Buffalo Grove, IL;
Kenneth Chua, Glenview, IL;
Earl Wilson, Ingleside, IL;
John Kutsch, Harvard, IL;

Applicant(s)

Medline Industries, LP, Northfied, IL;

Power of Attorney: The patent practitioners associated with Customer Number 27939

Domestic Priority data as claimed by applicant

This application is a CON of 16/833,575 03/28/2020
which is a CON of 15/684,787 08/23/2017 PAT 10640243
which is a CON of 14/793,455 07/07/2015 PAT 9745088
which is a CON of 13/860,902 04/11/2013 PAT 9522753
which is a DIV of 13/155,026 06/07/2011 PAT 8448786
which claims benefit of 61/352,140 06/07/2010
and claims benefit of 61/352,155 06/07/2010
and claims benefit of 61/428,944 12/31/2010
and claims benefit of 61/437,796 01/31/2011

and is a CON of 12/495,148 06/30/2009 PAT 8631935
and is a CIP of 12/647,515 12/27/2009 ABN
and is a CIP of 13/153,265 06/03/2011 PAT 9795761
and is a CIP of 13/153,300 06/03/2011 ABN
and said 12/495,148 06/30/2009
claims benefit of 61/183,629 06/03/2009

Foreign Applications for which priority is claimed (You may be eligible to benefit from the **Patent Prosecution Highway** program at the USPTO. Please see http://www.uspto.gov for more information.) - None.
Foreign application information must be provided in an Application Data Sheet in order to constitute a claim to foreign priority. See 37 CFR 1.55 and 1.76.

Permission to Access Application via Priority Document Exchange: Yes

Permission to Access Search Results: Yes

Applicant may provide or rescind an authorization for access using Form PTO/SB/39 or Form PTO/SB/69 as appropriate.

If Required, Foreign Filing License Granted: 08/07/2020
The country code and number of your priority application, to be used for filing abroad under the Paris Convention, is **US 16/944,667**

Projected Publication Date: Not Applicable

Non-Publication Request: No

Early Publication Request: No

Title

Catheter Tray, Packaging System, Instruction Insert, and Associated Methods

Preliminary Class

206

Statement under 37 CFR 1.55 or 1.78 for AIA (First Inventor to File) Transition Applications: No

PROTECTING YOUR INVENTION OUTSIDE THE UNITED STATES

Since the rights granted by a U.S. patent extend only throughout the territory of the United States and have no effect in a foreign country, an inventor who wishes patent protection in another country must apply for a patent in a specific country or in regional patent offices. Applicants may wish to consider the filing of an international application under the Patent Cooperation Treaty (PCT). An international (PCT) application generally has the same effect as a regular national patent application in each PCT-member country. The PCT process **simplifies** the filing of patent applications on the same invention in member countries, but **does not result** in a grant of "an international patent" and does not eliminate the need of applicants to file additional documents and fees in countries where patent protection is desired.

Almost every country has its own patent law, and a person desiring a patent in a particular country must make an application for patent in that country in accordance with its particular laws. Since the laws of many countries differ in various respects from the patent law of the United States, applicants are advised to seek guidance from specific foreign countries to ensure that patent rights are not lost prematurely.

Bard Exhibit 1004.0274

Applicants also are advised that in the case of inventions made in the United States, the Director of the USPTO must issue a license before applicants can apply for a patent in a foreign country. The filing of a U.S. patent application serves as a request for a foreign filing license. The application's filing receipt contains further information and guidance as to the status of applicant's license for foreign filing.

Applicants may wish to consult the USPTO booklet, "General Information Concerning Patents" (specifically, the section entitled "Treaties and Foreign Patents") for more information on timeframes and deadlines for filing foreign patent applications. The guide is available either by contacting the USPTO Contact Center at 800-786-9199, or it can be viewed on the USPTO website at http://www.uspto.gov/web/offices/pac/doc/general/index.html.

For information on preventing theft of your intellectual property (patents, trademarks and copyrights), you may wish to consult the U.S. Government website, http://www.stopfakes.gov. Part of a Department of Commerce initiative, this website includes self-help "toolkits" giving innovators guidance on how to protect intellectual property in specific countries such as China, Korea and Mexico. For questions regarding patent enforcement issues, applicants may call the U.S. Government hotline at 1-866-999-HALT (1-866-999-4258).

LICENSE FOR FOREIGN FILING UNDER

Title 35, United States Code, Section 184

Title 37, Code of Federal Regulations, 5.11 & 5.15

GRANTED

The applicant has been granted a license under 35 U.S.C. 184, if the phrase "IF REQUIRED, FOREIGN FILING LICENSE GRANTED" followed by a date appears on this form. Such licenses are issued in all applications where the conditions for issuance of a license have been met, regardless of whether or not a license may be required as set forth in 37 CFR 5.15. The scope and limitations of this license are set forth in 37 CFR 5.15(a) unless an earlier license has been issued under 37 CFR 5.15(b). The license is subject to revocation upon written notification. The date indicated is the effective date of the license, unless an earlier license of similar scope has been granted under 37 CFR 5.13 or 5.14.

This license is to be retained by the licensee and may be used at any time on or after the effective date thereof unless it is revoked. This license is automatically transferred to any related applications(s) filed under 37 CFR 1.53(d). This license is not retroactive.

The grant of a license does not in any way lessen the responsibility of a licensee for the security of the subject matter as imposed by any Government contract or the provisions of existing laws relating to espionage and the national security or the export of technical data. Licensees should apprise themselves of current regulations especially with respect to certain countries, of other agencies, particularly the Office of Defense Trade Controls, Department of State (with respect to Arms, Munitions and Implements of War (22 CFR 121-128)); the Bureau of Industry and Security, Department of Commerce (15 CFR parts 730-774); the Office of Foreign AssetsControl, Department of Treasury (31 CFR Parts 500+) and the Department of Energy.

NOT GRANTED

No license under 35 U.S.C. 184 has been granted at this time, if the phrase "IF REQUIRED, FOREIGN FILING LICENSE GRANTED" DOES NOT appear on this form. Applicant may still petition for a license under 37 CFR 5.12, if a license is desired before the expiration of 6 months from the filing date of the application. If 6 months has lapsed

Bard Exhibit 1004.0275

from the filing date of this application and the licensee has not received any indication of a secrecy order under 35 U.S.C. 181, the licensee may foreign file the application pursuant to 37 CFR 5.15(b).

SelectUSA

The United States represents the largest, most dynamic marketplace in the world and is an unparalleled location for business investment, innovation, and commercialization of new technologies. The U.S. offers tremendous resources and advantages for those who invest and manufacture goods here. Through SelectUSA, our nation works to promote and facilitate business investment. SelectUSA provides information assistance to the international investor community; serves as an ombudsman for existing and potential investors; advocates on behalf of U.S. cities, states, and regions competing for global investment; and counsels U.S. economic development organizations on investment attraction best practices. To learn more about why the United States is the best country in the world to develop technology, manufacture products, deliver services, and grow your business, visit http://www.SelectUSA.gov or call +1-202-482-6800.

Bard Exhibit 1004.0276

Doc Code: PA..
Document Description: Power of Attorney

PTO/AIA/82A (07-13)
Approved for use through 11/30/2014. OMB 0651-0051
U.S. Patent and Trademark Office; U.S. DEPARTMENT OF COMMERCE
Under the Paperwork Reduction Act of 1995, no persons are required to respond to a collection of information unless it displays a valid OMB control number.

TRANSMITTAL FOR POWER OF ATTORNEY TO ONE OR MORE REGISTERED PRACTITIONERS

NOTE: This form is to be submitted with the Power of Attorney by Applicant form (PTO/AIA/82B) to identify the application to which the Power of Attorney is directed, in accordance with 37 CFR 1.5, unless the application number and filing date are identified in the Power of Attorney by Applicant form. If neither form PTO/AIA/82A nor form PTO/AIA82B identifies the application to which the Power of Attorney is directed, the Power of Attorney will not be recognized in the application.

Application Number	16944667
Filing Date	July 31, 2020
First Named Inventor	Jennifer E. Tomes
Title	Cather Tray, Packaging Sytem, Instruction Insert, and Associated Methods
Art Unit	
Examiner Name	
Attorney Docket Number	10055UCIP2D1C1C1C1C1C1

SIGNATURE of Applicant or Patent Practitioner

Signature	/Philip H. Burrus, IV/	Date (Optional)	2022-09-16
Name	Philip H. Burrus, IV	Registration Number	45432
Title (if Applicant is a juristic entity)			
Applicant Name (if Applicant is a juristic entity)			

NOTE: This form must be signed in accordance with 37 CFR 1.33. See 37 CFR 1.4(d) for signature requirements and certifications. If more than one applicant, use multiple forms.

☐ *Total of _____ forms are submitted.

This collection of information is required by 37 CFR 1.131, 1.32, and 1.33. The information is required to obtain or retain a benefit by the public which is to file (and by the USPTO to process) an application. Confidentiality is governed by 35 U.S.C. 122 and 37 CFR 1.11 and 1.14. This collection is estimated to take 3 minutes to complete, including gathering, preparing, and submitting the completed application form to the USPTO. Time will vary depending upon the individual case. Any comments on the amount of time you require to complete this form and/or suggestions for reducing this burden, should be sent to the Chief Information Officer, U.S. Patent and Trademark Office, U.S. Department of Commerce, P.O. Box 1450, Alexandria, VA 22313-1450. DO NOT SEND FEES OR COMPLETED FORMS TO THIS ADDRESS. **SEND TO: Commissioner for Patents, P.O. Box 1450, Alexandria, VA 22313-1450.**

If you need assistance in completing the form, call 1-800-PTO-9199 and select option 2.

Doc Code: PA..
Document Description: Power of Attorney

PTO/AIA/82B (07-13)
Approved for use through 11/30/2014. OMB 0651-0051
U.S. Patent and Trademark Office; U.S. DEPARTMENT OF COMMERCE
Under the Paperwork Reduction Act of 1995, no persons are required to respond to a collection of information unless it displays a valid OMB control number

POWER OF ATTORNEY BY APPLICANT

I hereby revoke all previous powers of attorney given in the application identified in either the attached transmittal letter or the boxes below.

Application Number	Filing Date

(Note: The boxes above may be left blank if information is provided on form PTO/AIA/82A.)

☑ I hereby appoint the Patent Practitioner(s) associated with the following Customer Number as my/our attorney(s) or agent(s), and to transact all business in the United States Patent and Trademark Office connected therewith for the application referenced in the attached transmittal letter (form PTO/AIA/82A) or identified above: 189038

OR

☐ I hereby appoint Practitioner(s) named in the attached list (form PTO/AIA/82C) as my/our attorney(s) or agent(s), and to transact all business in the United States Patent and Trademark Office connected therewith for the patent application referenced in the attached transmittal letter (form PTO/AIA/82A) or identified above. (Note: Complete form PTO/AIA/82C.)

Please recognize or change the correspondence address for the application identified in the attached transmittal letter or the boxes above to:

☑ The address associated with the above-mentioned Customer Number

OR

☐ The address associated with Customer Number:

OR

Firm or Individual Name					
Address					
City		State		Zip	
Country					
Telephone		Email			

I am the Applicant (if the Applicant is a juristic entity, list the Applicant name in the box):

Medline Industries, LP

☐ Inventor or Joint Inventor (title not required below)

☐ Legal Representative of a Deceased or Legally Incapacitated Inventor (title not required below)

☑ Assignee or Person to Whom the Inventor is Under an Obligation to Assign (provide signer's title if applicant is a juristic entity)

☐ Person Who Otherwise Shows Sufficient Proprietary Interest (e.g., a petition under 37 CFR 1.46(b)(2) was granted in the application or is concurrently being filed with this document) (provide signer's title if applicant is a juristic entity)

SIGNATURE of Applicant for Patent

The undersigned (whose title is supplied below) is authorized to act on behalf of the applicant (e.g., where the applicant is a juristic entity).

Signature	David Noskowicz	Date (Optional)	
Name	David Noskowicz		
Title	Associate General Counsel		

NOTE: Signature - This form must be signed by the applicant in accordance with 37 CFR 1.33. See 37 CFR 1.4 for signature requirements and certifications. If more than one applicant, use multiple forms.

☐ Total of forms are submitted.

This collection of information is required by 37 CFR 1.131, 1.32, and 1.33. The information is required to obtain or retain a benefit by the public which is to file (and by the USPTO to process) an application. Confidentiality is governed by 35 U.S.C. 122 and 37 CFR 1.11 and 1.14. This collection is estimated to take 3 minutes to complete, including gathering, preparing, and submitting the completed application form to the USPTO. Time will vary depending upon the individual case. Any comments on the amount of time you require to complete this form and/or suggestions for reducing this burden, should be sent to the Chief Information Officer, U.S. Patent and Trademark Office, U.S. Department of Commerce, P.O. Box 1450, Alexandria, VA 22313-1450. DO NOT SEND FEES OR COMPLETED FORMS TO THIS ADDRESS. **SEND TO: Commissioner for Patents, P.O. Box 1450, Alexandria, VA 22313-1450.**

If you need assistance in completing the form, call 1-800-PTO-9199 and select option 2.

Electronic Acknowledgement Receipt

EFS ID:	46633381
Application Number:	16944667
International Application Number:	
Confirmation Number:	8322
Title of Invention:	Catheter Tray, Packaging System, Instruction Insert, and Associated Methods
First Named Inventor/Applicant Name:	Jennifer E. Tomes
Customer Number:	27939
Filer:	Philip Henry Burrus/Kayla Burrus
Filer Authorized By:	Philip Henry Burrus
Attorney Docket Number:	10055UCIP2D1C1C1C1C1C1
Receipt Date:	16-SEP-2022
Filing Date:	31-JUL-2020
Time Stamp:	13:21:25
Application Type:	Utility under 35 USC 111(a)

Payment information:

Submitted with Payment	no

File Listing:

Document Number	Document Description	File Name	File Size(Bytes)/ Message Digest	Multi Part /.zip	Pages (if appl.)
1	Power of Attorney	10055U_CIP2D1C1C1C1C1C1_2022-9-16_CustNo189038.pdf	288588 70cc527810fa200fd1ee405eced72ef7fc912af7	no	2

Warnings:

Information:	
Total Files Size (in bytes):	288588

This Acknowledgement Receipt evidences receipt on the noted date by the USPTO of the indicated documents, characterized by the applicant, and including page counts, where applicable. It serves as evidence of receipt similar to a Post Card, as described in MPEP 503.

New Applications Under 35 U.S.C. 111
If a new application is being filed and the application includes the necessary components for a filing date (see 37 CFR 1.53(b)-(d) and MPEP 506), a Filing Receipt (37 CFR 1.54) will be issued in due course and the date shown on this Acknowledgement Receipt will establish the filing date of the application.
National Stage of an International Application under 35 U.S.C. 371
If a timely submission to enter the national stage of an international application is compliant with the conditions of 35 U.S.C. 371 and other applicable requirements a Form PCT/DO/EO/903 indicating acceptance of the application as a national stage submission under 35 U.S.C. 371 will be issued in addition to the Filing Receipt, in due course.
New International Application Filed with the USPTO as a Receiving Office
If a new international application is being filed and the international application includes the necessary components for an international filing date (see PCT Article 11 and MPEP 1810), a Notification of the International Application Number and of the International Filing Date (Form PCT/RO/105) will be issued in due course, subject to prescriptions concerning national security, and the date shown on this Acknowledgement Receipt will establish the international filing date of the application.

UNITED STATES PATENT AND TRADEMARK OFFICE

UNITED STATES DEPARTMENT OF COMMERCE
United States Patent and Trademark Office
Address: COMMISSIONER FOR PATENTS
P.O. Box 1450
Alexandria, Virginia 22313-1450
www.uspto.gov

APPLICATION NUMBER	FILING OR 371(C) DATE	FIRST NAMED APPLICANT	ATTY. DOCKET NO./TITLE
16/944,667	07/31/2020	Jennifer E. Tomes	10055UCIP2D1C1C1C1C1C1

CONFIRMATION NO. 8322

POWER OF ATTORNEY NOTICE

OC000000136358265

27939
Philip H. Burrus, IV
Burrus Intellectual Property Law Group LLC
222 12th Street NE
Suite 1803
Atlanta, GA 30309

Date Mailed: 09/23/2022

NOTICE REGARDING CHANGE OF POWER OF ATTORNEY

This is in response to the Power of Attorney filed 09/16/2022.

- The Power of Attorney to you in this application has been revoked by the applicant. Future correspondence will be mailed to the new address of record(37 CFR 1.33).

Questions about the contents of this notice and the requirements it sets forth should be directed to the Office of Data Management, Application Assistance Unit, at **(571) 272-4000** or **(571) 272-4200** or **1-888-786-0101**.

/zabraha/

UNITED STATES PATENT AND TRADEMARK OFFICE

UNITED STATES DEPARTMENT OF COMMERCE
United States Patent and Trademark Office
Address: COMMISSIONER FOR PATENTS
P.O. Box 1450
Alexandria, Virginia 22313-1450
www.uspto.gov

APPLICATION NUMBER	FILING OR 371(C) DATE	FIRST NAMED APPLICANT	ATTY. DOCKET NO./TITLE
16/944,667	07/31/2020	Jennifer E. Tomes	10055UCIP2D1C1C1C1C1C1

CONFIRMATION NO. 8322

POA ACCEPTANCE LETTER

OC000000136358277

189038
Philip H. Burrus, IV
Burrus Intellectual Property Law Group LLC (MDL)
222 12th Street NE
Suite 1803
Atlanta, GA 30309

Date Mailed: 09/23/2022

NOTICE OF ACCEPTANCE OF POWER OF ATTORNEY

This is in response to the Power of Attorney filed 09/16/2022.

The Power of Attorney in this application is accepted. Correspondence in this application will be mailed to the above address as provided by 37 CFR 1.33.

Questions about the contents of this notice and the requirements it sets forth should be directed to the Office of Data Management, Application Assistance Unit, at **(571) 272-4000** or **(571) 272-4200** or **1-888-786-0101**.

/zabraha/

Bard Exhibit 1004.0282

UNITED STATES PATENT AND TRADEMARK OFFICE

UNITED STATES DEPARTMENT OF COMMERCE
United States Patent and Trademark Office
Address: COMMISSIONER FOR PATENTS
P.O. Box 1450
Alexandria, Virginia 22313-1450
www.uspto.gov

APPLICATION NO.	FILING DATE	FIRST NAMED INVENTOR	ATTORNEY DOCKET NO.	CONFIRMATION NO.
16/944,667	07/31/2020	Jennifer E. Tomes	10055UCIP2D1C1C1C1C1C1	8322

189038 7590 10/07/2022
Philip H. Burrus, IV
Burrus Intellectual Property Law Group LLC (MDL)
222 12th Street NE
Suite 1803
Atlanta, GA 30309

EXAMINER
MARCETICH, ADAM M

ART UNIT	PAPER NUMBER
3781	

NOTIFICATION DATE	DELIVERY MODE
10/07/2022	ELECTRONIC

Please find below and/or attached an Office communication concerning this application or proceeding.

The time period for reply, if any, is set in the attached communication.

Notice of the Office communication was sent electronically on above-indicated "Notification Date" to the following e-mail address(es):

BIPLaw_docketing@burrusiplaw.com
pburrus@burrusiplaw.com

PTOL-90A (Rev. 04/07)

Office Action Summary	Application No. 16/944,667	Applicant(s) Tomes et al.	
	Examiner Adam M Marcetich	Art Unit 3781	AIA (FITF) Status Yes

-- The MAILING DATE of this communication appears on the cover sheet with the correspondence address --

Period for Reply

A SHORTENED STATUTORY PERIOD FOR REPLY IS SET TO EXPIRE 3 MONTHS FROM THE MAILING DATE OF THIS COMMUNICATION.

- Extensions of time may be available under the provisions of 37 CFR 1.136(a). In no event, however, may a reply be timely filed after SIX (6) MONTHS from the mailing date of this communication.
- If NO period for reply is specified above, the maximum statutory period will apply and will expire SIX (6) MONTHS from the mailing date of this communication.
- Failure to reply within the set or extended period for reply will, by statute, cause the application to become ABANDONED (35 U.S.C. § 133). Any reply received by the Office later than three months after the mailing date of this communication, even if timely filed, may reduce any earned patent term adjustment. See 37 CFR 1.704(b).

Status

1)☑ Responsive to communication(s) filed on 31 July 2020 and 22 June 2021.

☐ A declaration(s)/affidavit(s) under **37 CFR 1.130(b)** was/were filed on _____.

2a)☐ This action is **FINAL.** 2b) ☑ This action is non-final.

3)☐ An election was made by the applicant in response to a restriction requirement set forth during the interview on _____; the restriction requirement and election have been incorporated into this action.

4)☐ Since this application is in condition for allowance except for formal matters, prosecution as to the merits is closed in accordance with the practice under *Ex parte Quayle*, 1935 C.D. 11, 453 O.G. 213.

Disposition of Claims*

5) ☑ Claim(s) 1-16 and 18-21 is/are pending in the application.

5a) Of the above claim(s) _____ is/are withdrawn from consideration.

6) ☐ Claim(s) _____ is/are allowed.

7) ☑ Claim(s) 1-16 and 18-21 is/are rejected.

8) ☐ Claim(s) _____ is/are objected to.

9) ☐ Claim(s) _____ are subject to restriction and/or election requirement

* If any claims have been determined allowable, you may be eligible to benefit from the **Patent Prosecution Highway** program at a participating intellectual property office for the corresponding application. For more information, please see http://www.uspto.gov/patents/init_events/pph/index.jsp or send an inquiry to **PPHfeedback@uspto.gov.**

Application Papers

10)☐ The specification is objected to by the Examiner.

11)☑ The drawing(s) filed on 31 July 2020 is/are: a)☑ accepted or b)☐ objected to by the Examiner.

Applicant may not request that any objection to the drawing(s) be held in abeyance. See 37 CFR 1.85(a).

Replacement drawing sheet(s) including the correction is required if the drawing(s) is objected to. See 37 CFR 1.121(d).

Priority under 35 U.S.C. § 119

12)☐ Acknowledgment is made of a claim for foreign priority under 35 U.S.C. § 119(a)-(d) or (f).

Certified copies:

a)☐ All b)☐ Some** c)☐ None of the:

1.☐ Certified copies of the priority documents have been received.

2.☐ Certified copies of the priority documents have been received in Application No. _____.

3.☐ Copies of the certified copies of the priority documents have been received in this National Stage application from the International Bureau (PCT Rule 17.2(a)).

** See the attached detailed Office action for a list of the certified copies not received.

Attachment(s)

1) ☐ Notice of References Cited (PTO-892)

2) ☑ Information Disclosure Statement(s) (PTO/SB/08a and/or PTO/SB/08b) Paper No(s)/Mail Date _____.

3) ☐ Interview Summary (PTO-413) Paper No(s)/Mail Date _____.

4) ☐ Other: _____.

Bard Exhibit 1004.0284

DETAILED ACTION

Notice of Pre-AIA or AIA Status

The present application, filed on or after March 16, 2013, is being examined under the first inventor to file provisions of the AIA.

Claim Objections

In claim 1, the language "… at least a portion of the medical assembly **[[dispowed]]** **disposed** within the second compartment … a fluid drain bag and a Foley **[[cathether]]** **catheter** …" should be changed for clarity.

Claim 1 should be revised to conclude as a sentence, to read "… for accommodating one or more of the first syringe or the second syringe **.** "

In claim 14, the language "… the first compartment being **[[sepearated]]** **separated** from the second compartment by a wall …

… a compartment of the tray defines a lubricating jelly application chamber **configured** to lubricate …

… chamber to lubricate **[[to]]** the portion of the Foley catheter." should be changed for clarity.

In claim 21, the language "… the surface defining a lubricating jelly application chamber **configured** to lubricate at least a portion of the Foley catheter …" should be changed for clarity.

Claim Rejections - 35 USC § 112(b)

The following is a quotation of 35 U.S.C. 112(b):

> (b) CONCLUSION.—The specification shall conclude with one or more claims particularly pointing out and distinctly claiming the subject matter which the inventor or a joint inventor regards as the invention.

The following is a quotation of 35 U.S.C. 112 (pre-AIA), second paragraph:

> The specification shall conclude with one or more claims particularly pointing out and distinctly claiming the subject matter which the applicant regards as his invention.

Claims 1-13 are rejected under 35 U.S.C. 112(b) or 35 U.S.C. 112 (pre-AIA), second paragraph, as being indefinite for failing to particularly point out and distinctly claim the subject matter which the inventor or a joint inventor, or for pre-AIA the applicant regards as the invention.

Claim 2 calls for "… wherein ***the one of the first syringe or the second syringe comprises the first syringe*** and the first syringe contains the lubricating jelly." This language appears redundant because the group of first and second syringes necessarily includes the first syringe.

Claim 4 calls for "…wherein the second syringe is disposed in ***the same compartment***." This language is ambiguous because parent claim 1 describes first and second compartments. Examiner suggests to rephrase this limitation in terms of both the first and second syringes being disposed in the same compartment.

Claim 8 calls for "…a tray comprising a ***first compartment*** and ***a lubricating jelly application chamber*** separated by a wall, with an opening allowing access to the lubricating jelly application chamber…" This language conflicts with the description in the specification, which describes that the first compartment itself comprises a lubricating jelly application chamber (¶ [0053], For instance, when the first compartment 101 has a first compartment base member 107 configured with a stair-stepped contour 115, the first compartment 101 can be used as a lubricant applicator for the catheter).

Examiner suggests to rephrase this claim in terms of a first compartment that serves as a lubricating jelly application chamber and a second compartment.

Claim 13 calls for "…wherein the first compartment is adjacent to the lubricating jelly application chamber." This description conflicts with the specification as discussed for claim 8.

Claims 3, 5-7 and 9-12 are rejected for depending on a rejected parent claim.

Double Patenting

The nonstatutory double patenting rejection is based on a judicially created doctrine grounded in public policy (a policy reflected in the statute) so as to prevent the unjustified or improper timewise extension of the "right to exclude" granted by a patent and to prevent possible harassment by multiple assignees. A nonstatutory obviousness-type double patenting rejection is appropriate where the conflicting claims are not identical, but at least one examined application claim is not patentably distinct from the reference claim(s) because the examined application claim is either anticipated by, or would have been obvious over, the reference claim(s). See, e.g., *In re Berg*, 140 F.3d 1428, 46 USPQ2d 1226 (Fed. Cir. 1998); *In re Goodman*, 11 F.3d 1046, 29 USPQ2d 2010 (Fed. Cir. 1993); *In re Longi*, 759 F.2d 887, 225 USPQ 645 (Fed. Cir. 1985); *In re Van Ornum*, 686 F.2d 937, 214 USPQ 761 (CCPA 1982); *In re Vogel*, 422 F.2d 438, 164 USPQ 619 (CCPA 1970); and *In re Thorington*, 418 F.2d 528, 163 USPQ 644 (CCPA 1969).

A timely filed terminal disclaimer in compliance with 37 CFR 1.321(c) or 1.321(d) may be used to overcome an actual or provisional rejection based on a nonstatutory double patenting ground provided the conflicting application or patent either is shown to be commonly owned with this application, or claims an invention made as a result of activities undertaken within the scope of a joint research agreement.

Effective January 1, 1994, a registered attorney or agent of record may sign a terminal disclaimer. A terminal disclaimer signed by the assignee must fully comply with 37 CFR 3.73(b).

Claims 1-21 are rejected on the ground of nonstatutory obviousness-type double patenting as being unpatentable over claims 1, 2, 7, 11 and 12 of Tomes '812; Jennifer E. et al. (US 10251812 B2) in view of Serany; Frank J. Jr. et al. (US 3329261 A).

Regarding pending claim 1, Tomes '812 claims substantially all limitations in patented claims 1, 7, 10 and 12, namely a medical procedure kit (claim 1, a tray configured to accommodate a catheter assembly; claim 12, a catheter packaging system), comprising:

a tray having a first compartment for receiving one or more syringes (claim 1, a first compartment); and

a second compartment for receiving a medical assembly (claim 1, a second compartment … a catheter assembly comprising a fluid bag disposed within the second compartment of the tray);

the second compartment bounded by a surface defining an opening allowing access to the second compartment (claim 7, the first barrier defining a first opening between the first compartment and the second compartment);

a first syringe and a second syringe disposed within the tray in accordance with an order of their use during a catheterization procedure (claim 1, a first syringe disposed within the first compartment of the tray; a second syringe disposed within the first compartment of the tray … wherein: the first syringe and the second are ordered within the tray in accordance with their use during a catheterization procedure);

at least a portion of the medical assembly disposed within the second compartment (claim 1, a catheter assembly comprising a fluid bag disposed within the second compartment of the tray);

wherein the medical assembly comprises a coiled tubing coupled between a fluid drain bag and a catheter (claim 1, a catheter assembly comprising a fluid bag disposed within the second compartment of the tray; claim 12, a second compartment for accommodating a coiled medical device); and

wherein: one of the first syringe or the second syringe contains lubricating jelly (claim 10, the lubricating jelly application compartment to receive lubricating jelly from the one of the first syringe or the second syringe);

the first compartment defines one or more contours for accommodating one or more of the first syringe or the second syringe (claim 1, the first compartment defines one or more contours for accommodating flanges of one or more of the first syringe or the second syringe).

Tomes '812 does not claim an outer packaging, that the second syringe contains water or that the catheter is a Foley catheter. Serany discloses a compact package containing sterile components for catheterization (col. 1, lines 25-30; col. 1, lines 60-70, box 10), comprising:

a tray (col. 1, lines 60-70, tray 12);

a Foley catheter (col. 3, lines 20-25, Foley catheter 48);

an outer packaging disposed about the tray (col. 1, lines 60-70, envelope 16); and

a syringe containing water (col. 3, lines 5-10, The tray 12 has a further depression 44 for a prefilled syringe 45 used to inflate the balloon on the catheter … the barrels 45b filled with a fixed amount of sterile water).

Serany includes a common type of urinary catheter in the kit, supplies inflation fluid with a catheterization kit and also protects the kit from dust or contamination during shipping and storage. One would be motivated to modify the claims of Tomes '812 with Serany's outer packaging and sterile water in order to protect the contents of the kit, and also to inflate a conventional urinary catheter. Therefore, it would have been obvious to modify the claims of Tomes '812 with Serany's outer packaging and sterile water in order to protect the catheter kit and operate the catheter.

Regarding pending claim 8, Tomes '812 claims all limitations in patented claims 1, 2, 7, 10 and 12, namely a medical procedure kit, comprising a tray (claim 1, a tray configured to accommodate a catheter assembly; claim 12, a catheter packaging system);

comprising a first compartment (claim 1, a first compartment); and

a lubricating jelly application chamber (claim 2, the first compartment defining a lubricating jelly applicator);

separated by a wall with an opening allowing access to the lubricating jelly application chamber (claim 7, the first barrier defining a first opening between the first compartment and the second compartment);

a container of lubricating jelly disposed within the tray (claim 10, the lubricating jelly application compartment to receive lubricating jelly from the one of the first syringe);

a coiled tubing coupled between a fluid drain bag and a catheter (claim 1, a catheter assembly comprising a fluid bag disposed within the second compartment of the tray; claim 12, a second compartment for accommodating a coiled medical device);

wherein: the coiled tubing, the fluid drain bag, and the catheter are disposed within the medical procedure kit (claim 1, a catheter assembly comprising a fluid bag disposed within the second compartment of the tray; claim 12, a second compartment for accommodating a coiled medical device); and

the lubricating jelly application chamber is configured to receive lubricating jelly from the container of lubricating jelly for lubricating at least a portion of the catheter with the lubricating jelly (claim 10, the lubricating jelly application compartment to receive lubricating jelly from the one of the first syringe or the second syringe to lubricate the catheter).

Tomes '812 does not claim wrap material or outer packaging, and does not explicitly claim a Foley catheter. Serany discloses a catheterization package (col. 1, lines 25-30; col. 1, lines 60-70, box 10), comprising:

a Foley catheter (col. 3, lines 20-25, Foley catheter 48);

at least one layer of wrap material enclosing a tray within one or more folds of the at least one layer of wrap material (col. 1, lines 60-70, wrap 14); and

an outer packaging disposed about both the tray and the at least one layer of wrap material (col. 1, lines 60-70, envelope 16).

Serany selects a well-known type of urinary catheter and protects a catheterization kit from contamination. Regarding the rationale and motivation to modify the claims of Tomes '812 with Serany's wrap material and outer packaging, see the discussion of claim 1 above.

One would be motivated to modify the claims of Tomes '812 with Serany's outer packaging and sterile water in order to protect the contents of the kit, and also to inflate a conventional urinary catheter. Therefore, it would have been obvious to modify packaging and sterile water in order to protect the catheter kit and operate the catheter.

Regarding pending claim 14, Tomes '812 claims all limitations in patented claims 1, 2, 7 and 12, namely a medical procedure kit (claim 1, a tray configured to accommodate a catheter assembly; claim 12, a catheter packaging system), comprising:

a tray having a first compartment, a second compartment, and a third compartment (claim 1, a contoured surface defining at least three compartments);

the first compartment being separated from the second compartment by a wall (claim 1, a first barrier separating the first compartment from the second compartment);

a first syringe and a second syringe disposed within the tray (claim 1, a first syringe disposed within the first compartment of the tray; a second syringe disposed within the first compartment of the tray);

a catheter coupled to a fluid drain bag via a coiled tubing, the catheter disposed within the second compartment of the tray (claim 1, a catheter assembly comprising a

fluid bag disposed within the second compartment of the tray; claim 12, a second compartment for accommodating a coiled medical device); and

a compartment of the tray defines a lubricating jelly application chamber to lubricate at least a portion of the catheter (claim 2, the first compartment defining a lubricating jelly applicator); and

the tray defines an opening through which one or more of the catheter or the coiled tubing can be passed into the lubricating jelly application chamber to lubricate to the portion of the catheter (claim 2, the first compartment defining a lubricating jelly applicator; claim 7, the first barrier defining a first opening between the first compartment and the second compartment).

Tomes '812 does not claim swabsticks or a wrap, and does not explicitly claim that the catheter is a Foley catheter. Serany discloses a kit including a Foley catheter (col. 3, lines 20-25, Foley catheter 48); and

one or more swabsticks disposed within a compartment (col. 2, lines 55-65, The tray also has a depression 32 for balls 34 of cleansing material, e.g. rayon … forceps 36).

Regarding the limitation of swabsticks disposed in a third compartment, Tomes '812 claims a third compartment (claim 1, a third compartment comprising a third compartment base member); and Serany discloses that the swabs are contained in a separate compartment (col. 2, lines 55-65, rayon balls 34 in their stored position in the depression 32). A skilled artisan would have been able to modify the claims of Tomes '812 with Serany's swabs by placing the swabs in the third compartment of Tomes '812, to provide a cleaning accessory and to make room for other components in the kit.

Serany selects a well-known type of urinary catheter and protects a catheterization kit from contamination. Regarding the rationale and motivation to modify the claims of Tomes '812 with Serany's wrap material and outer packaging, see the discussion of claim 1 above.

Regarding pending claim 21, Tomes '812 claims all limitations in patented claims 1, 2, 7, 11 and 12, namely a catheter kit, comprising:

a surface defining a tray (claim 1, a tray configured to accommodate a catheter assembly; claim 12, a catheter packaging system);

comprising at least two compartments at least partially separated by a barrier (claim 1, a contoured surface defining at least three compartments separated by barriers and a perimeter wall);

the at least two compartments being open via a top opening of the tray (claim 11, each of the first compartment, the second compartment, and the third compartment open along a side of the tray opposite the second base member);

a first syringe disposed in a first compartment of the at least two compartments (claim 1, a first syringe disposed within the first compartment of the tray);

a second syringe disposed within the tray (claim 1, a second syringe disposed within the first compartment of the tray);

a catheter coupled to a coiled tubing and a fluid drain bag (claim 1, a catheter assembly comprising a fluid bag disposed within the second compartment of the tray; claim 12, a second compartment for accommodating a coiled medical device);

with the catheter being disposed within a second compartment of the at least two compartments (claim 1, a catheter assembly comprising a fluid bag disposed within the second compartment of the tray);

the surface defining a lubricating jelly application chamber to lubricate at least a portion of the catheter when the portion of the catheter is passed through an opening defined by a barrier bounding the lubricating jelly application chamber into the lubricating jelly application chamber (claim 2, the first compartment defining a lubricating jelly applicator; claim 7, the first barrier defining a first opening between the first compartment and the second compartment).

Tomes '812 does not claim swabsticks or a wrap, and does not explicitly claim that the catheter is a Foley catheter. Serany discloses a kit including a Foley catheter (col. 3, lines 20-25, Foley catheter 48);

one or more swabsticks disposed in a compartment defined by the surface of a tray (col. 2, lines 55-65, The tray also has a depression 32 for balls 34 of cleansing material, e.g. rayon … forceps 36); and

a wrap folded about the tray (col. 1, lines 60-70, wrap 14).

Serany provides cleaning supplies, selects a well-known type of urinary catheter and protects a catheterization kit from contamination. Regarding the rationale and motivation to modify the claims of Tomes '812 with Serany's features, see the discussion of claims 1 and 14 above.

<u>Regarding pending claims 2-7, 9-13, 15, 16 and 18-20</u>, Tomes '812 claims all limitations in patented claims 1, 2, 9 in combination with Serany as shown in table 1.

Regarding the limitation in claim 15 of the tray comprising a single layer tray, Tomes '812 claims that a first barrier separates the first compartment from the second compartment and a second barrier separates the second compartment from the third compartment (claim 1). Therefore, the compartments appear to extend along a single layer tray.

Table 1: Tomes '812 double patenting					
Pending claim	Tomes '812 or Serany	Pending claim	Tomes '812 or Serany	Pending claim	Tomes '812 or Serany
2	1	9	2, 9, 10	16	Serany
3	Serany	10	Serany	18	1
4	1	11	Serany	19	1
5	1	12	Serany	20	1
6	2, 9, 10	13	1		
7	Serany	15	1		

Claims 1-16 and 18-21 are rejected on the ground of nonstatutory obviousness-type double patenting as being unpatentable over claims 1, 11-13, 15, 21-22, 25-26, 34, 36 and 44 of Tomes '753; Jennifer E. et al. (US 9522753 B2) in view of Serany; Frank J. Jr. et al. (US 3329261 A).

Regarding pending claim 1, Tomes '753 claims substantially all limitations in patented claims 1, 11, 12, 15, 36 and 44. Although Tomes '753 claims a method, Tomes '753 also claims substantially all the structures of claim 1.

Tomes '753 does not explicitly claim that the second syringe contains water. Serany discloses a compact package containing sterile components for catheterization (col. 1, lines 25-30; col. 1, lines 60-70, box 10), comprising:

a syringe containing water (col. 3, lines 5-10, The tray 12 has a further depression 44 for a prefilled syringe 45 used to inflate the balloon on the catheter … the barrels 45b filled with a fixed amount of sterile water).

Serany supplies a catheterization kit with inflation fluid for a Foley catheter. One would be motivated to modify the claims of Tomes '753 with Serany's sterile water in order to inflate a conventional urinary catheter. Therefore, it would have been obvious to modify the claims of Tomes '753 with Serany's sterile water in order to operate a Foley catheter.

Regarding pending claim 8, Tomes '753 claims substantially all limitations in patented claims 1, 11, 13, 15 and 44.

Regarding pending claim 14, Tomes '753 claims substantially all limitations in patented claims 1, 11, 13, 21, 25, 34 and 44. Tomes '753 does not explicitly claim swabsticks. Serany discloses a kit including one or more swabsticks disposed within a compartment (col. 2, lines 55-65, The tray also has a depression 32 for balls 34 of cleansing material, e.g. rayon … forceps 36).

Regarding the limitation of swabsticks disposed in a third compartment, Tomes '753 claims a third compartment (claim 34. a third compartment); and Serany discloses that the swabs are contained in a separate compartment (col. 2, lines 55-65, rayon balls 34 in their stored position in the depression 32). A skilled artisan would have been able to modify the claims of Tomes '753 with Serany's swabs by placing the swabs in the

third compartment of Tomes '753, in order to provide a cleaning accessory and to make room for other components in the kit.

Regarding pending claim 21, Tomes '753 claims substantially all limitations in patented claims 1, 11, 13, 15, 21, 22, 26 and 44. Regarding the limitation of the at least two compartments being open via a top opening of the tray, Tomes '753 claims that the two compartments are bounded by a perimeter wall that is less than three inches in height (claim 26). Regarding the limitation of a first syringe disposed in a first compartment of the at least two compartments, Tomes '753 claims that both the first and second syringes are disposed in the first compartment (claim 22, the first compartment supporting the first syringe at a shallower depth within the single level tray than the second syringe).

Tomes '753 does not explicitly claim swabsticks. Serany discloses a kit including one or more swabsticks disposed within a compartment (col. 2, lines 55-65, The tray also has a depression 32 for balls 34 of cleansing material, e.g. rayon … forceps 36). Regarding the rationale and motivation to modify the claims of Tomes '753 with Serany's swabsticks, see the discussion of claim 14 above.

Regarding pending claims 2-7, 9-13, 15, 16 and 18-20, Tomes '753 claims all limitations in patented claims 1, 10, 15, 21, 22, 36, 44 and 50 in combination with Serany as shown in table 2.

Table 2: Tomes '753 double patenting							
Pending claim	Tomes '753 or Serany	Pending claim	Tomes '753 or Serany	Pending claim	Tomes '753 or Serany	Pending claim	Tomes '753 or Serany
2	15	6	50	11	Serany	16	Serany
3	Serany	7	Serany	12	Serany	18	10
4	22	9	44, 50	13	10	19	10
5	21	10	Serany	15	1	20	36

Claims 1-13 are rejected on the ground of nonstatutory obviousness-type double patenting as being unpatentable over claims 1, 4, 5, 20 32, 33, 46, 47 and 51 of Tomes '088; Jennifer E. et al. (US 9745088 B2) in view of Serany; Frank J. Jr. et al. (US 3329261 A).

Regarding pending claim 1, Tomes '088 claims substantially all limitations in patented claims 1, 4, 5, 32, 33, 46, 47 and 51. Regarding the limitation of a tray having a first compartment for receiving one or more syringes, Tomes '088 claims that the first compartment receives both the first and second syringes (claim 4, the at least two compartments comprising the first compartment to support the first syringe and the second syringe at different heights).

Regarding pending claim 8, Tomes '088 claims substantially all limitations in patented claims 1, 4, 5, 20, 32, 33 and 51.

Regarding pending claims 2-7 and 9-13, Tomes '088 claims all limitations in patented claims 4, 5 and 51 as shown in table 3.

Table 3: Tomes '088 double patenting					
Pending claim	Tomes '088 or Serany	Pending claim	Tomes '088 or Serany	Pending claim	Tomes '088 or Serany
2	51	6	5	11	Serany
3	Serany	7	Serany	12	Serany
4	4	9	5, 20	13	4
5	4	10	Serany		

Claims 1-13 are rejected on the ground of nonstatutory obviousness-type double patenting as being unpatentable over claims 1, 4-9 and 11-12 of Tomes '243; Jennifer E. et al. (US 10640243 B2) in view of Serany; Frank J. Jr. et al. (US 3329261 A).

Regarding pending claim 1, Tomes '243 claims substantially all limitations in patented claims 1, 5-9, 11 and 12. Tomes '243 does not claim an outer packaging. Serany discloses a compact catheterization package (col. 1, lines 25-30; col. 1, lines 60-70, box 10), comprising:

a tray (col. 1, lines 60-70, tray 12);

a Foley catheter (col. 3, lines 20-25, Foley catheter 48); and

an outer packaging disposed about the tray (col. 1, lines 60-70, envelope 16).

Regarding the rationale and motivation to modify Tomes '243 with Serany's packaging, see the discussion of claim 1 above.

Regarding pending claim 8, Tomes '243 claims substantially all limitations in patented claims 1 and 4.

Tomes '243 does not claim wrap material or outer packaging, and does not explicitly claim a Foley catheter. Serany discloses a catheterization package (col. 1, lines 25-30; col. 1, lines 60-70, box 10), comprising:

at least one layer of wrap material enclosing a tray within one or more folds of the at least one layer of wrap material (col. 1, lines 60-70, wrap 14); and

an outer packaging disposed about both the tray and the at least one layer of wrap material (col. 1, lines 60-70, envelope 16).

Serany selects a well-known type of urinary catheter and protects a catheterization kit from contamination. Regarding the rationale and motivation to modify the claims of Tomes '243 with Serany's wrap material and outer packaging, see the discussion of claim 1 above.

Regarding pending claims 2-7 and 9-13, Tomes '243 claims all limitations in patented claims 1, 4, 7 and 8 as shown in table 4. Regarding the limitation of the Foley catheter passing through the opening into the lubricating jelly application chamber, Tomes '243 claims a lubricating jelly application chamber (claim 1); and an opening between a compartment and lubricating jelly application chamber (claim 4).

Table 4: Tomes '243 double patenting					
Pending claim	Tomes '243 or Serany	Pending claim	Tomes '243 or Serany	Pending claim	Tomes '243 or Serany
2	7	6	1	11	Serany
3	Serany	7	Serany	12	Serany
4	8	9	1, 4	13	1
5	1	10	Serany		

Claims 8-13, 14-16, 18, 19 and 21 are rejected on the ground of nonstatutory obviousness-type double patenting as being unpatentable over claims 1, 4 and 8 of Tomes '992; Jennifer E. et al. (US 10946992 B2).

Regarding pending claim 8, Tomes '992 claims substantially all limitations in patented claims 1 and 8.

Tomes '992 does not claim an outer packaging. Serany discloses a catheterization package (col. 1, lines 25-30; col. 1, lines 60-70, box 10), comprising:

an outer packaging disposed about both a tray and at least one layer of wrap material (col. 1, lines 60-70, envelope 16).

Serany protects a catheterization kit from contamination. Regarding the rationale and motivation to modify the claims of Tomes '992 with Serany's wrap material and outer packaging, see the discussion of claim 1 above.

Regarding pending claim 14, Tomes '992 claims substantially all limitations in patented claim 1.

Regarding pending claim 21, Tomes '992 claims substantially all limitations in patented claims 1, 2 and 8. Regarding the limitation of the at least two compartments being open via a top opening of the tray, Tomes '992 claims that the kit includes a single layer tray comprising first, second and third compartments separated by walls (claim 1). This implies that all three compartments are arranged on a single level and have upward-facing openings.

Regarding pending claims 9-13, 15, 16, 18 and 19, Tomes '992 claims all limitations in patented claims 1 and 4 as shown in table 5.

Table 5: Tomes '992					
Pending claim	Tomes '992 or Serany	Pending claim	Tomes '992 or Serany	Pending claim	Tomes '992 or Serany
9	1	12	4	16	1
10	1	13	1	18	1
11	4	15	1	19	1

Claims 1-16 and 18-21 are rejected on the ground of nonstatutory obviousness-type double patenting as being unpatentable over claims 1, 8, 9, 11 and 13 of Tomes '352; Jennifer E. et al. (US 9283352 B2), in view of Serany; Frank J. Jr. et al. (US 3329261 A).

Regarding pending claim 1, Tomes '352 claims substantially all limitations in patented claims 1, 3 and 9. Regarding the limitation of outer packaging, Tomes '352 claims a sealed bag (claim 3, a sealed bag disposed about the wrap).

Tomes '352 does not explicitly claim that the second syringe contains water. Serany discloses a catheterization package (col. 1, lines 25-30; col. 1, lines 60-70, box 10), comprising:

a syringe containing water (col. 3, lines 5-10, The tray 12 has a further depression 44 for a prefilled syringe 45 used to inflate the balloon on the catheter … the barrels 45b filled with a fixed amount of sterile water).

Serany supplies a catheterization kit with inflation fluid for a Foley catheter. Regarding the rationale and motivation to modify the claims of Tomes '352 with Serany's sterile water, see the discussion of claim 1 above.

Regarding pending claim 8, Tomes '352 claims substantially all limitations in patented claims 1, 3 and 9.

Regarding pending claims 14 and 21, Tomes '352 claims substantially all limitations in patented claims 1, 9, 11 and 13.

Regarding pending claims 1-7, 9-13, 15, 16 and 18-20, Tomes '352 claims all limitations in patented claims 1, 8 and 13 in combination with Serany, shown in table 6.

Table 6: Tomes '352 double patenting							
Pending claim	Tomes '352 or Serany	Pending claim	Tomes '352 or Serany	Pending claim	Tomes '352 or Serany	Pending claim	Tomes '352 or Serany
2	1	6	1	11	Serany	16	13
3	Serany	7	13	12	Serany	18	1
4	1	9	1	13	1	19	1
5	1	10	13	15	1	20	8

Claims 1 and 8 are rejected on the ground of nonstatutory obviousness-type double patenting as being unpatentable over claims 1, 2, 14 and 16 of Tomes '596; Jennifer E. et al. (US 9808596 B2), in view of Serany; Frank J. Jr. et al. (US 3329261 A).

Regarding pending claim 1, Tomes '596 claims substantially all limitations in patented claims 1, 2, 14 and 16. Tomes '596 does not explicitly claim that the second syringe contains water. Serany discloses a catheterization package (col. 1, lines 25-30; col. 1, lines 60-70, box 10), comprising:

a syringe containing water (col. 3, lines 5-10, The tray 12 has a further depression 44 for a prefilled syringe 45 used to inflate the balloon on the catheter … the barrels 45b filled with a fixed amount of sterile water).

Serany supplies a catheterization kit with inflation fluid for a Foley catheter. Regarding the rationale and motivation to modify the claims of Tomes '596 with Serany's sterile water, see the discussion of claim 1 above.

Regarding pending claim 8, Tomes '596 claims substantially all limitations in patented claims 1 and 2.

Tomes '596 does not claim an outer packaging. Serany discloses a catheterization package (col. 1, lines 25-30; col. 1, lines 60-70, box 10), comprising:

an outer packaging disposed about both a tray and at least one layer of wrap material (col. 1, lines 60-70, envelope 16).

Serany protects a catheterization kit from contamination. Regarding the rationale and motivation to modify the claims of Tomes '596 with Serany's wrap material and outer packaging, see the discussion of claim 1 above.

Claims 1, 8, 14 and 21 are rejected on the ground of nonstatutory obviousness-type double patenting as being unpatentable over claims 1, 7, 10 and 11 of Tomes '752; Jennifer E. et al. (US 10512752 B2).

Regarding pending claim 1, Tomes '752 claims substantially all limitations in patented claims 1, 7 and 10. Regarding the limitation of the first syringe and second syringe disposed within the tray in accordance with an order of their use, Tomes '752

claims instructions that describe how to use the Foley catheter and its accessories (claim 7, a health care services portion comprising instructions for using the Foley catheter and corresponding medical devices on the patient). This implies that the order of the syringes in the tray corresponds to their order of use in the instructions.

Although Tomes '752 claims a method of using a catheter package, Tomes '752 claims all the structural limitations of claim 1.

Regarding pending claim 8, Tomes '752 claims substantially all limitations in patented claims 1 and 10. Regarding the limitation of an outer packaging, Tomes '752 claims a sealed bag (claim 1, a sealed bag disposed about the single level tray and the one or more layers of wrap).

Regarding pending claims 14 and 21, Tomes '752 claims substantially all limitations in patented claims 1, 10 and 11.

Conclusion

Any inquiry concerning this communication or earlier communications from the examiner should be directed to:

Tel 571-272-2590
Fax 571-273-2590
Email Adam.Marcetich@uspto.gov

The Examiner can be reached 8am-4pm Mon-Fri.

If attempts to reach the examiner by telephone are unsuccessful, the examiner's supervisor, Tatyana Zalukaeva can be reached at 571-272-1115. The fax phone number for the organization where this application is assigned is 571-273-8300.

Examiner interviews are available via telephone, in-person, and video conferencing using a USPTO supplied web-based collaboration tool. To schedule an interview, applicant is encouraged to use the USPTO Automated Interview Request (AIR) at http://www.uspto.gov/interviewpractice.

Information regarding the status of published or unpublished applications may be obtained from Patent Center. Unpublished application information in Patent Center is available to registered users. To file and manage patent submissions in Patent Center, visit: https://patentcenter.uspto.gov.

Visit https://www.uspto.gov/patents/apply/patent-center for more information about Patent Center and https://www.uspto.gov/patents/docx for information about filing in DOCX format. For additional questions, contact the Electronic Business Center (EBC) at 866-217-9197 (toll-free). If you would like assistance from a USPTO Customer Service Representative, call 800-786-9199 (IN USA OR CANADA) or 571-272-1000.

/Adam Marcetich/
Primary Examiner, Art Unit 3781

Search Notes	Application/Control No.	Applicant(s)/Patent Under Reexamination
	16/944,667	Tomes et al.
	Examiner	**Art Unit**
	Adam M Marcetich	3781

CPC - Searched*		
Symbol	**Date**	**Examiner**
B65B11/00, A61B50/30, A61B50/33, A61B2050/3008	09/29/2022	AMM
A61M25/00, A61M25/002, A61M5/002, A61M25/0017, A61M2209/06	09/29/2022	AMM
A61J2205/50, A61L2202/18, A61L2202/182	09/29/2022	AMM

CPC Combination Sets - Searched*		
Symbol	**Date**	**Examiner**

US Classification - Searched*			
Class	**Subclass**	**Date**	**Examiner**

* See search history printout included with this form or the SEARCH NOTES box below to determine the scope of the search.

Search Notes		
Search Notes	**Date**	**Examiner**
Inventor search in US-PGPUB, USPAT	09/29/2022	AMM
Review cited art for related cases 16833575, 15684787, 14793455, 13860902, 13155026, 12647515, 12495148	09/29/2022	AMM
Review Inter Partes Review cases IPR2015-00509, IPR2015-00511, IPR2015-00513, IPR2019-00035, IPR2019-00036, IPR2019-00109	09/29/2022	AMM

Interference Search			
US Class/CPC Symbol	**US Subclass/CPC Group**	**Date**	**Examiner**

/Adam Marcetich/ Primary Examiner, Art Unit 3781	

Bard Exhibit 1004.0308

Search Notes	Application/Control No.	Applicant(s)/Patent Under Reexamination
	16/944,667	Tomes et al.
	Examiner	**Art Unit**
	Adam M Marcetich	3781

/Adam Marcetich/ Primary Examiner, Art Unit 3781	

Bard Exhibit 1004.0309

Doc code: IDS
Doc description: Information Disclosure Statement (IDS) Field

PTO/SB/08a (01-10)
Approved for use through 07/31/2012. OMB 0651-0031
U.S. Patent and Trademark Office; U.S. DEPARTMENT OF COMMERCE
Under the Paperwork Reduction Act of 1995, no persons are required to respond to a collection of information unless it contains a valid OMB control number.

INFORMATION DISCLOSURE STATEMENT BY APPLICANT (Not for submission under 37 CFR 1.99)		
	Application Number	16/944,667
	Filing Date	July 31, 2020
	First Named Inventor	Jennifer E. Tomes
	Art Unit	
	Examiner Name	
	Attorney Docket Number	10055U CIP2 D1 C1C1C1C1C1

U.S.PATENTS						
Examiner Initial*	Cite No	Patent Number	Kind Code[1]	Issue Date	Name of Patentee or Applicant of cited Document	Pages, Columns, Lines, Where Relevant Passages or Relevant Figures Appear
		2659485		1953-11-17	Duley et al.	
		2715296		1955-08-16	Petit, Frank	
		2781611		1957-02-19	West, Bill	
		2886316		1959- 05-12	Ayala, Carl	
		2947415		1960-08-02	Garth	
		2954642		1960-10-04	Roderick, Jackson	
		2959891		1960-11-15	Barnett, Harry et al.	
		3013656		1961-12-19	Murphy, Jr., William P	
		3107786		1963-10-22	Adelman	
		3133635		1964- 05-19	Morris, Gordon	
		3166189		1965-01-19	Disston	

ALL REFERENCES CONSIDERED EXCEPT WHERE LINED THROUGH. /AMM/

Doc code: IDS
Doc description: Information Disclosure Statement (IDS) Field

PTO/SB/08a (01-10)
Approved for use through 07/31/2012. OMB 0651-0031
U.S. Patent and Trademark Office; U.S. DEPARTMENT OF COMMERCE
Under the Paperwork Reduction Act of 1995, no persons are required to respond to a collection of information unless it contains a valid OMB control number.

INFORMATION DISCLOSURE STATEMENT BY APPLICANT (Not for submission under 37 CFR 1.99)		
	Application Number	16/944,667
	Filing Date	July 31, 2020
	First Named Inventor	Jennifer E. Tomes
	Art Unit	
	Examiner Name	
	Attorney Docket Number	10055U CIP2 D1 C1C1C1C1C1

		3315802		1967-04-25	Maro	
		3329261		1967-07-04	Serany, Jr., F. J., et al.	
		D209641		1967-12-19	Goldberg, D	
		3379339		1968-04-23	Asenbauer, Donald	
		3485352		1969-12-23	Pilger, N J.	
		D218077		1970-07-14	Gabriel, G.	
		3542019		1970-12-24	Gittins, Romona	
		3726281		1973-04-10	Norton	
		3770119		1973-11-06	Hultberg et al.	
		3851649		1974-12-03	Villari	
		D234404		1975-02-25	Merril, K.	
		3901235		1975-08-26	Patel et al.	

ALL REFERENCES CONSIDERED EXCEPT WHERE LINED THROUGH. /AMM/

Doc code: IDS
Doc description: Information Disclosure Statement (IDS) Field

PTO/SB/08a (01-10)
Approved for use through 07/31/2012. OMB 0651-0031
U.S. Patent and Trademark Office; U.S. DEPARTMENT OF COMMERCE
Under the Paperwork Reduction Act of 1995, no persons are required to respond to a collection of information unless it contains a valid OMB control number.

INFORMATION DISCLOSURE STATEMENT BY APPLICANT (Not for submission under 37 CFR 1.99)		
	Application Number	16/944,667
	Filing Date	July 31, 2020
	First Named Inventor	Jennifer E. Tomes
	Art Unit	
	Examiner Name	
	Attorney Docket Number	10055U CIP2 D1 C1C1C1C1C1

		D237315		1975-10-21	Nowkowski, E.	
		D237317		1975-10-21	Nowkowski, E.	
		3965900		1976-06-29	Boedecker, Steven	
		3967728		1976-07-06	Gordon et al.	
		3976195		1976-08-24	Cohen, Sheldon	
		3978983		1976-09-07	Brezetta, Michael W.	
		D242654		1976-12-07	Rawls, Norma J.	
		3998221		1976-12-21	Collins, Robert F.	
		4011944		1977-03-15	Cooley	
		D243798		1977-03-22	Swartz, Ronald E.	
		4075782		1978-02-28	Neuschatz, Joseph	
		D248871		1978-08-08	Forsman et al.	

ALL REFERENCES CONSIDERED EXCEPT WHERE LINED THROUGH. /AMM/

Doc code: IDS
Doc description: Information Disclosure Statement (IDS) Field

PTO/SB/08a (01-10)
Approved for use through 07/31/2012. OMB 0651-0031
U.S. Patent and Trademark Office; U.S. DEPARTMENT OF COMMERCE
Under the Paperwork Reduction Act of 1995, no persons are required to respond to a collection of information unless it contains a valid OMB control number.

INFORMATION DISCLOSURE STATEMENT BY APPLICANT (Not for submission under 37 CFR 1.99)		
	Application Number	16/944,667
	Filing Date	July 31, 2020
	First Named Inventor	Jennifer E. Tomes
	Art Unit	
	Examiner Name	
	Attorney Docket Number	10055U CIP2 D1 C1C1C1C1C1

		D249362		1978-09-12	Forsman et al.	
		4140127		1979-02-20	Ciani et al.	
		4160505		1979-07-10	Rauschenberger, Richard	
		4170300		1979-10-09	Pick, Ernest	
		4053280		1979-10-11	Salisbury, Thomas	
		4226328		1980-10-07	Beddow	
		4266669		1981- 05-12	Watson	
		4269310		1981- 05-26	Uson, Aurelio	
		4282678		1981-08-11	Tsui, Kwok	
		4307539		1981-12-29	Klein, Claus-Dieter	
		D262995		1982-02-09	Gaba et al.	
		4334537		1982-06-15	Peterson, James	

ALL REFERENCES CONSIDERED EXCEPT WHERE LINED THROUGH. /AMM/

Doc code: IDS
Doc description: Information Disclosure Statement (IDS) Field

PTO/SB/08a (01-10)
Approved for use through 07/31/2012. OMB 0651-0031
U.S. Patent and Trademark Office; U.S. DEPARTMENT OF COMMERCE
Under the Paperwork Reduction Act of 1995, no persons are required to respond to a collection of information unless it contains a valid OMB control number.

INFORMATION DISCLOSURE STATEMENT BY APPLICANT (Not for submission under 37 CFR 1.99)		
	Application Number	16/944,667
	Filing Date	July 31, 2020
	First Named Inventor	Jennifer E. Tomes
	Art Unit	
	Examiner Name	
	Attorney Docket Number	10055U CIP2 D1 C1C1C1C1C1

		D268130		1983-03-01	Easton, Harlan	
		4458705		1984-07-10	Cawood, Charles	
		D275886		1984-10-09	Sheward et al.	
		D276462		1984-11-20	Villarreal, Isamari	
		D277508		1985-02-05	Clair, Michael W.	
		4501363		1985-02-26	Isbey, Jr., Edward	
		4523679		1985-06-18	Paikoff et al.	
		4530349		1985-07-23	Metzger, Dorothy	
		D280663		1985-09-17	Albon et al.	
		D280933		1985-10-08	McLaughlin, John T.	
		D280993		1985-10-15	Mariol, James F.	
		D283051		1986-03-18	Fichera, Alfred J.	

ALL REFERENCES CONSIDERED EXCEPT WHERE LINED THROUGH. /AMM/

Doc code: IDS
Doc description: Information Disclosure Statement (IDS) Field

PTO/SB/08a (01-10)
Approved for use through 07/31/2012. OMB 0651-0031
U.S. Patent and Trademark Office; U.S. DEPARTMENT OF COMMERCE
Under the Paperwork Reduction Act of 1995, no persons are required to respond to a collection of information unless it contains a valid OMB control number.

INFORMATION DISCLOSURE STATEMENT BY APPLICANT (Not for submission under 37 CFR 1.99)		
	Application Number	16/944,667
	Filing Date	July 31, 2020
	First Named Inventor	Jennifer E. Tomes
	Art Unit	
	Examiner Name	
	Attorney Docket Number	10055U CIP2 D1 C1C1C1C1C1

		D287760		1987-01-13	Discko, Jr., John J.	
		4761008		1988-08-02	Huggins, Peter D.	
		4767008		1988-08-30	Warnecke et al.	
		4795441		1989-01-03	Bhatt, Kunjlata	
		4811847		1989-03-14	Reif, Thomas H.	
		4828113		1989- 05-09	Friedland, Jeffrey	
		4844259		1989-07-04	Glowczewskie et al.	
		4858821		1989-08-22	Bickelhaupt, Roger	
		4991877		1991-02-12	Lieberman, Michael L.	
		5007535		1991-04-16	Meseke et al.	
		5024326		1991-06-18	Sandel et al.	
		5031768		1991-07-16	Fischer, Dan E.	

ALL REFERENCES CONSIDERED EXCEPT WHERE LINED THROUGH. /AMM/

Doc code: IDS
Doc description: Information Disclosure Statement (IDS) Field

PTO/SB/08a (01-10)
Approved for use through 07/31/2012. OMB 0651-0031
U.S. Patent and Trademark Office; U.S. DEPARTMENT OF COMMERCE
Under the Paperwork Reduction Act of 1995, no persons are required to respond to a collection of information unless it contains a valid OMB control number.

INFORMATION DISCLOSURE STATEMENT BY APPLICANT (Not for submission under 37 CFR 1.99)		
	Application Number	16/944,667
	Filing Date	July 31, 2020
	First Named Inventor	Jennifer E. Tomes
	Art Unit	
	Examiner Name	
	Attorney Docket Number	10055U CIP2 D1 C1C1C1C1C1

		5094621		1992-03-10	Friedel, Joan	
		5163557		1992-11-17	Sokolowski, Theresa	
		5170804		1992-12-15	Glassman	
		5197885		1993-03-30	Friedel, Joan	
		D334973		1993-04-20	Valentine et al.	
		D337830		1993-07-27	Coyne et al.	
		5232369		1993-08-03	Mavrikis, Anna M.	
		5242398		1993-09-07	Knoll, Charles et al.	
		5244394		1993-09-14	Serabian-Musto, Judy	
		D343687		1994-01-25	Houghton et al.	
		5312287		1994- 05-17	Chuang, Gary	
		5314339		1994- 05-24	Aponte, Marivel	

ALL REFERENCES CONSIDERED EXCEPT WHERE LINED THROUGH. /AMM/

Doc code: IDS
Doc description: Information Disclosure Statement (IDS) Field

PTO/SB/08a (01-10)
Approved for use through 07/31/2012. OMB 0651-0031
U.S. Patent and Trademark Office; U.S. DEPARTMENT OF COMMERCE
Under the Paperwork Reduction Act of 1995, no persons are required to respond to a collection of information unless it contains a valid OMB control number.

INFORMATION DISCLOSURE STATEMENT BY APPLICANT (Not for submission under 37 CFR 1.99)		
	Application Number	16/944,667
	Filing Date	July 31, 2020
	First Named Inventor	Jennifer E. Tomes
	Art Unit	
	Examiner Name	
	Attorney Docket Number	10055U CIP2 D1 C1C1C1C1C1

		5318543		1994-06-07	Ross et al.	
		5324201		1994-06-28	Friedel, Joan	
		4925448		1990- 05-15	Bazaral, Michael G.	
		4928830		1990- 05-29	Brewer, Cecil C.	
		D623765		2010-09-14	Tomes et al.	
		D650912		2011-12-20	Tomes et al.	
		D704856		2014- 05-13	Tomes et al.	
		D832456		2018-10-30	Self, Brian	
		5339955		1994-08-23	Horan et al.	
		D351661		1994-10-18	Fischer, Dan E.	
		5392918		1995-02-28	Harrison	
		5411437		1995- 05-02	Weber et al.	

ALL REFERENCES CONSIDERED EXCEPT WHERE LINED THROUGH. /AMM/

Doc code: IDS
Doc description: Information Disclosure Statement (IDS) Field

PTO/SB/08a (01-10)
Approved for use through 07/31/2012. OMB 0651-0031
U.S. Patent and Trademark Office; U.S. DEPARTMENT OF COMMERCE
Under the Paperwork Reduction Act of 1995, no persons are required to respond to a collection of information unless it contains a valid OMB control number.

INFORMATION DISCLOSURE STATEMENT BY APPLICANT (Not for submission under 37 CFR 1.99)		
	Application Number	16/944,667
	Filing Date	July 31, 2020
	First Named Inventor	Jennifer E. Tomes
	Art Unit	
	Examiner Name	
	Attorney Docket Number	10055U CIP2 D1 C1C1C1C1C1

		5487566		1996-01-30	Hedge, Jr., J. R.	
		5779053		1997-06-24	Partika	
		D380272		1997-06-24	Partika et al.	
		5665945		1997-09-09	Oshima, Mikio	
		D387177		1997-12-02	Davis, Mark S.	
		D387559		1997-12-16	Williamson, Edward	
		5713778		1998-02-03	Rodeosevich et al.	
		5720502		1998-02-24	Cain, John R.	
		5778574		1998-07-14	Reuben, Ronnie	
		5795213		1998-08-18	Goodwin, Richard P.	
		5810738		1998-09-22	Thomas II, Donald D.	
		5820441		1998-10-13	Pracas, Victor	

ALL REFERENCES CONSIDERED EXCEPT WHERE LINED THROUGH. /AMM/

Doc code: IDS
Doc description: Information Disclosure Statement (IDS) Field

PTO/SB/08a (01-10)
Approved for use through 07/31/2012. OMB 0651-0031
U.S. Patent and Trademark Office; U.S. DEPARTMENT OF COMMERCE
Under the Paperwork Reduction Act of 1995, no persons are required to respond to a collection of information unless it contains a valid OMB control number.

INFORMATION DISCLOSURE STATEMENT BY APPLICANT (Not for submission under 37 CFR 1.99)		
	Application Number	16/944,667
	Filing Date	July 31, 2020
	First Named Inventor	Jennifer E. Tomes
	Art Unit	
	Examiner Name	
	Attorney Docket Number	10055U CIP2 D1 C1C1C1C1C1

		5827262		1998-10-27	Neftel et al.	
		5829790		1998-11-03	Phillips, Richard L.	
		5872262		1999-02-16	Dolle III et al.	
		5931303		1999-08-03	Salvadori, Lawrence	
		5941241		1999-08-24	Weinstein et al.	
		5947284		1999-09-07	Foster, Brian W.	
		5954369		1999-09-21	Seabrook, March E.	
		5975295		1999-11-02	Diamond, Richard B.	
		6004136		1999-12-21	Ehrenpreis, Barbara	
		6012586		2000-01-11	Misra, Vijay K.	
		6068121		2000- 05-30	McGlinch, Timothy M.	
		6089943		2000-07-18	Lo, Wai	

ALL REFERENCES CONSIDERED EXCEPT WHERE LINED THROUGH. /AMM/

Doc code: IDS
Doc description: Information Disclosure Statement (IDS) Field

PTO/SB/08a (01-10)
Approved for use through 07/31/2012. OMB 0651-0031
U.S. Patent and Trademark Office; U.S. DEPARTMENT OF COMMERCE
Under the Paperwork Reduction Act of 1995, no persons are required to respond to a collection of information unless it contains a valid OMB control number.

INFORMATION DISCLOSURE STATEMENT BY APPLICANT (Not for submission under 37 CFR 1.99)		
	Application Number	16/944,667
	Filing Date	July 31, 2020
	First Named Inventor	Jennifer E. Tomes
	Art Unit	
	Examiner Name	
	Attorney Docket Number	10055U CIP2 D1 C1C1C1C1C1

		6142152		2000-11-07	Gawarecki, Herbert	
		6158437		2000-12-12	Vagley, Richard	
		6159017		2000-12-12	Coomansingh, Belden	
		D442697		2001- 05-22	Hajianpour, Mohammed A.	
		D450130		2001-11-06	Goldstein, Lee M.	
		D450391		2001-11-13	Hunt et al.	
		6330427		2001-12-11	Tabachnik, Joel B.	
		6361396		2002-03-26	Snyder et al.	
		6382212		2002- 05-07	Borchard, Craig F.	
		6405863		2002-06-18	Dhindsa	
		6454097		2002-09-24	Blanco, Juan Carlos Aceves	
		20030038475		2003-02-27	Stancil, Michelle	

ALL REFERENCES CONSIDERED EXCEPT WHERE LINED THROUGH. /AMM/

Doc code: IDS
Doc description: Information Disclosure Statement (IDS) Field

PTO/SB/08a (01-10)
Approved for use through 07/31/2012. OMB 0651-0031
U.S. Patent and Trademark Office; U.S. DEPARTMENT OF COMMERCE
Under the Paperwork Reduction Act of 1995, no persons are required to respond to a collection of information unless it contains a valid OMB control number.

INFORMATION DISCLOSURE STATEMENT BY APPLICANT (Not for submission under 37 CFR 1.99)		
	Application Number	16/944,667
	Filing Date	July 31, 2020
	First Named Inventor	Jennifer E. Tomes
	Art Unit	
	Examiner Name	
	Attorney Docket Number	10055U CIP2 D1 C1C1C1C1C1

		6579271		2003-06-17	Aruffo et al.	
		6659506		2003-12-09	Erisalu, Enn	
		6681933		2004-01-11	Demsien et al.	
		6769546		2004-08-03	Busch	
		D495491		2004-09-07	Ramirez, Richard	
		6793078		2004-09-21	Roshdy, Constance E.	
		6840379		2005-01-11	Franks-Farah et al.	
		6896141		2005- 05-24	McMichael et al.	
		6915901		2005-07-12	Feinberg	
		6926708		2005-08-09	Franks-Farah et al.	
		6948742		2005-09-27	Buck	
		7048120		2006- 05-23	Pond, Gary J.	

ALL REFERENCES CONSIDERED EXCEPT WHERE LINED THROUGH. /AMM/

Doc code: IDS
Doc description: Information Disclosure Statement (IDS) Field

PTO/SB/08a (01-10)
Approved for use through 07/31/2012. OMB 0651-0031
U.S. Patent and Trademark Office; U.S. DEPARTMENT OF COMMERCE
Under the Paperwork Reduction Act of 1995, no persons are required to respond to a collection of information unless it contains a valid OMB control number.

INFORMATION DISCLOSURE STATEMENT BY APPLICANT (Not for submission under 37 CFR 1.99)		
	Application Number	16/944,667
	Filing Date	July 31, 2020
	First Named Inventor	Jennifer E. Tomes
	Art Unit	
	Examiner Name	
	Attorney Docket Number	10055U CIP2 D1 C1C1C1C1C1

		7066328		2006-06-27	Janice Pulsifer	
		D530920		2006-10-31	Snell, Russell	
		D547064		2007-07-24	Snell, Russell	
		D549454		2007-08-28	.ANG.hman, Daniel	
		7264869		2007-09-04	Tobita	
		7278987		2007-10-09	Solazzo, Anthony	
		D557047		2007-12-11	Dretzka, Philip	
		D561473		2008-02-12	Phillips et al.	
		D563673		2008-03-11	Dretzka, Philip	
		7401703		2008-07-22	McMichael, Donald J.	
		7434687		2008-10-14	Itou et al.	
		D579662		2008-11-04	Dretzka, Philip	

ALL REFERENCES CONSIDERED EXCEPT WHERE LINED THROUGH. /AMM/

Doc code: IDS
Doc description: Information Disclosure Statement (IDS) Field

PTO/SB/08a (01-10)
Approved for use through 07/31/2012. OMB 0651-0031
U.S. Patent and Trademark Office; U.S. DEPARTMENT OF COMMERCE
Under the Paperwork Reduction Act of 1995, no persons are required to respond to a collection of information unless it contains a valid OMB control number.

INFORMATION DISCLOSURE STATEMENT BY APPLICANT (Not for submission under 37 CFR 1.99)		
	Application Number	16/944,667
	Filing Date	July 31, 2020
	First Named Inventor	Jennifer E. Tomes
	Art Unit	
	Examiner Name	
	Attorney Docket Number	10055U CIP2 D1 C1C1C1C1C1

		D590596		2009-04-21	Dretzka, Philip	
		D596311		2009-07-14	Antons, Peter	
		7624869		2009-12-01	Primer, Jonathan S.	
		D609819		2010-02-09	Tomes et al.	
		D609819 S		2010-02-09	Tomes, Jennifer E., et al.	
		D612153		2010-03-23	Liao, Ying-Chieh	
		7785312		2010-08-31	Thorne	
		7789873		2010-09-07	Kubalak, Thomas	
		D636894		2011-04-26	Tomes et al.	
		D638137		2011- 05-17	Gross et al.	
		D662218		2012-06-19	Pittman, William	
		8448786		2013- 05-28	Tomes et al.	

ALL REFERENCES CONSIDERED EXCEPT WHERE LINED THROUGH. /AMM/

Doc code: IDS
Doc description: Information Disclosure Statement (IDS) Field

PTO/SB/08a (01-10)
Approved for use through 07/31/2012. OMB 0651-0031
U.S. Patent and Trademark Office; U.S. DEPARTMENT OF COMMERCE
Under the Paperwork Reduction Act of 1995, no persons are required to respond to a collection of information unless it contains a valid OMB control number.

INFORMATION DISCLOSURE STATEMENT BY APPLICANT (Not for submission under 37 CFR 1.99)		
	Application Number	16/944,667
	Filing Date	July 31, 2020
	First Named Inventor	Jennifer E. Tomes
	Art Unit	
	Examiner Name	
	Attorney Docket Number	10055U CIP2 D1 C1C1C1C1C1

		D688461		2013-08-27	Ambrefe et al.	
		8628549		2014-01-14	To et al.	
		8631935		2014-01-21	Tomes et al.	
		8678190		2014-03-25	Tomes et al.	
		8708999		2014-04-29	Hong et al.	
		D708347		2014-07-01	Lober, Stephen	
		D708759		2014-07-08	Heyman et al.	
		D720470		2014-12-30	Lober, Stephen	
		D720471		2014-12-30	Angel et al.	
		9084593		2015-07-21	Yakel et al.	
		D742028		2015-10-27	Hutchison, Jonathan	
		9283352		2016-03-15	Tomes et al.	

ALL REFERENCES CONSIDERED EXCEPT WHERE LINED THROUGH. /AMM/

Doc code: IDS
Doc description: Information Disclosure Statement (IDS) Field

PTO/SB/08a (01-10)
Approved for use through 07/31/2012. OMB 0651-0031
U.S. Patent and Trademark Office; U.S. DEPARTMENT OF COMMERCE
Under the Paperwork Reduction Act of 1995, no persons are required to respond to a collection of information unless it contains a valid OMB control number.

INFORMATION DISCLOSURE STATEMENT BY APPLICANT (Not for submission under 37 CFR 1.99)		
	Application Number	16/944,667
	Filing Date	July 31, 2020
	First Named Inventor	Jennifer E. Tomes
	Art Unit	
	Examiner Name	
	Attorney Docket Number	10055U CIP2 D1 C1C1C1C1C1

		D310896		2016-09-25	Winjum, Jack	
		9522753		2016-12-20	Tomes et al.	
		D779082		2017-02-14	Andre et al.	
		D800337		2017-10-17	Daines, Eric	
		9795761		2017-10-24	Lockwood et al.	
		9808400		2017-11-07	Tomes et al.	
		10251812		2019-04-09	Tomes et al.	
U.S.PATENT APPLICATION PUBLICATIONS						
Examiner Initial*	Cite No	Publication Number	Kind Code[1]	Publication Date	Name of Patentee or Applicant of cited Document	Pages, Columns, Lines, Where Relevant Passages or Relevant Figures Appear
		2002/0185406		2002-12-12	Massengale, Roger	
		2003/0031995		2003-02-13	Laura, Abbey	
		2003/0038475		2003-02-27	Stancil, Michelle	
		2003/0075474		2003-04-24	Moyer et al.	

ALL REFERENCES CONSIDERED EXCEPT WHERE LINED THROUGH. /AMM/

Doc code: IDS
Doc description: Information Disclosure Statement (IDS) Field

PTO/SB/08a (01-10)
Approved for use through 07/31/2012. OMB 0651-0031
U.S. Patent and Trademark Office; U.S. DEPARTMENT OF COMMERCE
Under the Paperwork Reduction Act of 1995, no persons are required to respond to a collection of information unless it contains a valid OMB control number.

INFORMATION DISCLOSURE STATEMENT BY APPLICANT (Not for submission under 37 CFR 1.99)		
	Application Number	16/944,667
	Filing Date	July 31, 2020
	First Named Inventor	Jennifer E. Tomes
	Art Unit	
	Examiner Name	
	Attorney Docket Number	10055U CIP2 D1 C1C1C1C1C1

		2003/0159966		2003-08-28	McMichael et al.	
		2003/0159969		2003-08-28	McMichael et al.	
		2004/0004019		2004-01-08	Busch, L. J.	
		2004/0055919		2004-03-25	Rowe et al.	
		2004/0161732		2004-08-19	Stump, Ronda	
		2004/0180822		2004-09-16	Grafton, Donald	
		2004/0195145		2004-10-07	Roshdy, Constance E.	
		2004/0238391		2004-12-02	Pond, Gary	
		2005/0022822		2005-02-03	Santilli, Albert	
		2005/0101905		2005- 05-12	Merry, Alan	
		2005/0228691		2005-10-13	Paparo, Michael	
		2005024 1986		2005-11-03	Massengale et al.	
		2005/0256453		2005-11-17	Nagamatsu, Ryuji	

ALL REFERENCES CONSIDERED EXCEPT WHERE LINED THROUGH. /AMM/

Doc code: IDS
Doc description: Information Disclosure Statement (IDS) Field

PTO/SB/08a (01-10)
Approved for use through 07/31/2012. OMB 0651-0031
U.S. Patent and Trademark Office; U.S. DEPARTMENT OF COMMERCE
Under the Paperwork Reduction Act of 1995, no persons are required to respond to a collection of information unless it contains a valid OMB control number.

INFORMATION DISCLOSURE STATEMENT BY APPLICANT (Not for submission under 37 CFR 1.99)		
	Application Number	16/944,667
	Filing Date	July 31, 2020
	First Named Inventor	Jennifer E. Tomes
	Art Unit	
	Examiner Name	
	Attorney Docket Number	10055U CIP2 D1 C1C1C1C1C1

		2005/0285385		2005-12-29	Bova	
		2006/0009742		2006-01-12	Solazzo, Anthony	
		2006/0096877		2006- 05-11	Khajavi et al.	
		2006/0011501		2006-01-19	Itou, Yasushi	
		2006/0029912		2006-02-09	Kearby, Gerald et al.	
		2006/0088355		2006-04-27	Ribi, Hans	
		2006/0186010		2006-08-24	Warnack	
		2006/0264822		2006-11-23	Nagamatsu, Ryuji	
		2006/264822		2006-11-23	Nagamatsu, Ryuji	
		2006/0271019		2006-11-30	Stoller	
		2007/0026472		2007-02-01	Prokash et al.	
		2007/0060908		2007-03-15	Webster et al.	
		2007/0065792		2007-03-22	Schubarth, Wanda	

ALL REFERENCES CONSIDERED EXCEPT WHERE LINED THROUGH. /AMM/

Doc code: IDS
Doc description: Information Disclosure Statement (IDS) Field

PTO/SB/08a (01-10)
Approved for use through 07/31/2012. OMB 0651-0031
U.S. Patent and Trademark Office; U.S. DEPARTMENT OF COMMERCE
Under the Paperwork Reduction Act of 1995, no persons are required to respond to a collection of information unless it contains a valid OMB control number.

INFORMATION DISCLOSURE STATEMENT BY APPLICANT (Not for submission under 37 CFR 1.99)		
	Application Number	16/944,667
	Filing Date	July 31, 2020
	First Named Inventor	Jennifer E. Tomes
	Art Unit	
	Examiner Name	
	Attorney Docket Number	10055U CIP2 D1 C1C1C1C1C1

		2007/0084742		2007-04-19	Miller, Larry J., et al.	
		2007/0088330		2007-04-19	House, Jamie	
		2007/0095699		2007- 05-03	Frieze, Allan	
		2007/0142786		2007-06-21	Lampropoulos, Fred	
		2007/0161971		2007-07-12	House, Jamie	
		2007/0203464		2007-08-30	Green et al.	
		2007/0225687		2007-09-27	House, Jamie G.	
		2007/0299431		2007-12-27	Jakubowski et al.	
		2008/0116106		2008- 05-22	Lampropoulos et al.	
		2008/121553		2008- 05-29	Gobel, Fred	
		20080283433		2008-11-20	Primer, Jonathan	
		2008/0221515		2008-09-11	Nagamatsu, Ryuji	
		2008/0249476		2008-10-09	Bierman et al.	

ALL REFERENCES CONSIDERED EXCEPT WHERE LINED THROUGH. /AMM/

Doc code: IDS
Doc description: Information Disclosure Statement (IDS) Field

PTO/SB/08a (01-10)
Approved for use through 07/31/2012. OMB 0651-0031
U.S. Patent and Trademark Office; U.S. DEPARTMENT OF COMMERCE
Under the Paperwork Reduction Act of 1995, no persons are required to respond to a collection of information unless it contains a valid OMB control number.

INFORMATION DISCLOSURE STATEMENT BY APPLICANT (Not for submission under 37 CFR 1.99)		
	Application Number	16/944,667
	Filing Date	July 31, 2020
	First Named Inventor	Jennifer E. Tomes
	Art Unit	
	Examiner Name	
	Attorney Docket Number	10055U CIP2 D1 C1C1C1C1C1

		20080281254		2008-11-13	Humayun et al.	
		20080283426		2008-11-20	Primer et al.	
		20090004055		2009-01-01	Darrigrand et al.	
		20090071854		2009-03-19	Martin, William Wesley	
		20090152160		2009-06-18	Thompson et al.	
		20090184026		2009-07-23	Massengale et al.	
		20090194453		2009-08-06	Thorne et al.	
		20090234346		2009-09-17	McBride et al.	
		20090236259		2009-09-24	Hicks, Lois A.	
		20090318783		2009-12-24	Rohde, Bemina et al.	
		20100274205		2010-10-28	Morelli et al.	
		20100307942		2010-12-09	Tomes et al.	
		20100311026		2010-12-09	Tomes et al.	

ALL REFERENCES CONSIDERED EXCEPT WHERE LINED THROUGH. /AMM/

Doc code: IDS
Doc description: Information Disclosure Statement (IDS) Field

PTO/SB/08a (01-10)
Approved for use through 07/31/2012. OMB 0651-0031
U.S. Patent and Trademark Office; U.S. DEPARTMENT OF COMMERCE
Under the Paperwork Reduction Act of 1995, no persons are required to respond to a collection of information unless it contains a valid OMB control number.

INFORMATION DISCLOSURE STATEMENT BY APPLICANT (Not for submission under 37 CFR 1.99)		
	Application Number	16/944,667
	Filing Date	July 31, 2020
	First Named Inventor	Jennifer E. Tomes
	Art Unit	
	Examiner Name	
	Attorney Docket Number	10055U CIP2 D1 C1C1C1C1C1

		2011/0107494		2011- 05-12	Haines, Kimberly	
		2011/0155599		2011-06-30	Yakel et al.	
		2011/0232234		2011-09-29	Lockwood et al.	
		2011/0284410		2011-11-24	Lockwood, Robert	
		2011/0297147		2011-12-08	Lick et al.	
		2012/0145589		2012-06-14	Macinnes et al.	
		2014/0110296		2014-04-24	Terzibashian, Hagop S.	
		20100311026		2010-12-09	Tomes et al.	
		20110233079		2011-09-29	Macinnes et al.	
		20110290260		2011-12-01	Tomes et al.	
		20110290262		2011-12-01	Tomes et al.	
		20090099531		2009-04-16	Griesbach, III, Henry L.	
		20100307941		2010-12-09	Tomes et al.	

ALL REFERENCES CONSIDERED EXCEPT WHERE LINED THROUGH. /AMM/

Doc code: IDS
Doc description: Information Disclosure Statement (IDS) Field

PTO/SB/08a (01-10)
Approved for use through 07/31/2012. OMB 0651-0031
U.S. Patent and Trademark Office; U.S. DEPARTMENT OF COMMERCE
Under the Paperwork Reduction Act of 1995, no persons are required to respond to a collection of information unless it contains a valid OMB control number.

INFORMATION DISCLOSURE STATEMENT BY APPLICANT (Not for submission under 37 CFR 1.99)		
	Application Number	16/944,667
	Filing Date	July 31, 2020
	First Named Inventor	Jennifer E. Tomes
	Art Unit	
	Examiner Name	
	Attorney Docket Number	10055U CIP2 D1 C1C1C1C1C1

		2012014 5589		2012-06-14	Macinnes et al.			
FOREIGN PATENT DOCUMENTS								
Examiner Initial*	Cite No	Foreign Document Number[3]	Country Code[2]	Kind Code[4]	Publication Date	Name of Patentee or Applicant of cited Document	Pages,Columns,Lines where Relevant Passages or Relevant Figures Appear	T[5]
		6012586	CA		2000-01-11	Vijay, Misra		
		2005/027767	WO		2005-03-31	Dillon et al.		
		2006/114466	WO		2006-11-02	Aurelio		
		2007/045943	EP		2007-04-26	Tecnosanimed S R L		
		2007/045943	WO		2007-04-26	Tecnosanimed S R L et al.		
		2007-229520	JP		2007-09-13	Imai		
		201823147	CN		2011-05-11			
NON-PATENT LITERATURE DOCUMENTS								
Examiner Initials*	Cite No	Include name of the author (in CAPITAL LETTERS), title of the article (when appropriate), title of the item (book, magazine, journal, serial, symposium, catalog, etc.), date, page(s), volume-issue number(s), publisher, city and/or country where published.						T[5]
		Medline Industries Inc. vs C.R Bard. Inc., Exhibit G to Declaration of Dylan J. Raife in Support of Bard Opening Claim Construction Brief; Civil Action No 1:16-cv-03529; Judge Sharon Johnson Coleman; Filed November 11,2016.,						

ALL REFERENCES CONSIDERED EXCEPT WHERE LINED THROUGH. /AMM/

Receipt date: 08/04/2020

Doc code: IDS
Doc description: Information Disclosure Statement (IDS) Field

PTO/SB/08a (01-10)
Approved for use through 07/31/2012. OMB 0651-0031
U.S. Patent and Trademark Office; U.S. DEPARTMENT OF COMMERCE

Under the Paperwork Reduction Act of 1995, no persons are required to respond to a collection of information unless it contains a valid OMB control number.

INFORMATION DISCLOSURE STATEMENT BY APPLICANT (Not for submission under 37 CFR 1.99)		
	Application Number	16/944,667
	Filing Date	July 31, 2020
	First Named Inventor	Jennifer E. Tomes
	Art Unit	
	Examiner Name	
	Attorney Docket Number	10055U CIP2 D1 C1C1C1C1C1

		Chinese Application No: 201280035240.4; Filed May 24, 2012; Attorney Docket No. NP131057 (BPMDL0005JT.P6.CN 10055U CIP6 CN); Mailed August 18, 2015,	
		Dictionary definition m-w. URL:<http://ww.merriam-webster.com/dictionary/reassure>. Retrieved from Internet 10 Dec. 2013.,	
		Dictionary definition m-w. URL:<http://www.merriam-webster.com/dictionary/brave>. Retrieved fro Internet 10 Dec. 2013.,	
no publication date reference considered	not	~~Dover Intermittent Catheter Tray - 14 fr, Red Rubber; Website http://tinyurl.com/o4esrwh; Unknown Publication Date,~~	
		Inter Partes Review - Patent Owner's Prelim. Response; Patent 9,795,761; Inter Partes Review No. IPR2019-00109; Filed February 22, 2019.,	
		Inter Partes Review - Patent Owner's Prelim. Response; Patent 9,808,400; Inter Partes Review No. IPR2019-00208; Filed March 7, 2019.,	
		IPR Petition 2001, Declaration of Meyst dated January 11, 2019; IPR 2019-00035, IPR-2019-00036,	
		IPR Petition 2002, Declaration of Weintraub dated January 11, 2019; IPR 2019-00035, IPR-2019-00036,	

ALL REFERENCES CONSIDERED EXCEPT WHERE LINED THROUGH. /AMM/

Doc code: IDS
Doc description: Information Disclosure Statement (IDS) Field

PTO/SB/08a (01-10)
Approved for use through 07/31/2012. OMB 0651-0031
U.S. Patent and Trademark Office; U.S. DEPARTMENT OF COMMERCE
Under the Paperwork Reduction Act of 1995, no persons are required to respond to a collection of information unless it contains a valid OMB control number.

INFORMATION DISCLOSURE STATEMENT BY APPLICANT (Not for submission under 37 CFR 1.99)		
	Application Number	16/944,667
	Filing Date	July 31, 2020
	First Named Inventor	Jennifer E. Tomes
	Art Unit	
	Examiner Name	
	Attorney Docket Number	10055U CIP2 D1 C1C1C1C1C1

		IPR Petition Exhibit 2001, Declaration of Meyst dated February 22, 2019; IPR2019-00109,	
		IPR Petition Exhibit 2001, Declaration of Meyst dated March 7, 2019; IPR2019-00208,	
		IPR Petition Exhibit 2001; Declaration of Meyst dated March 7, 2019; IPR2019-00223,	
		IPR Petition Exhibit 2002, Declaration of Weintraub dated March 7, 2019; IPR2019-00208,	
		IPR Petition Exhibit 2002, Declaration of Weintraub dated March 7, 2019; IPR2019-00223,	
		Lion King Sticker website. URL: <http://tlkobession.wuffpaws.org/OldSite/games/games2.html>. 1996 Retrieved from Internet 10 Dec. 2013.,	
		Lion Sticker Activity Book website. URL: <http://www.amazon.com/Disneys-Simbas-Pride-Sticker-Activity/dp/B0018DOJZA>. 1998 Retrieved from Internet 10 Dec. 2013.,	
		Medline Industries Inc. vs C.R Bard, Inc., Exhibit 1 to Declaration of Karl L. Leinsing in Support of Bard's Rebuttal on Claim Construction; Civil Action No. 1:16-cv-03529; Judge Sharon Johnson Coleman; Filed January 12.2018.,	

ALL REFERENCES CONSIDERED EXCEPT WHERE LINED THROUGH. /AMM/

Doc code: IDS
Doc description: Information Disclosure Statement (IDS) Field

PTO/SB/08a (01-10)
Approved for use through 07/31/2012. OMB 0651-0031
U.S. Patent and Trademark Office; U.S. DEPARTMENT OF COMMERCE
Under the Paperwork Reduction Act of 1995, no persons are required to respond to a collection of information unless it contains a valid OMB control number.

INFORMATION DISCLOSURE STATEMENT BY APPLICANT (Not for submission under 37 CFR 1.99)		
	Application Number	16/944,667
	Filing Date	July 31, 2020
	First Named Inventor	Jennifer E. Tomes
	Art Unit	
	Examiner Name	
	Attorney Docket Number	10055U CIP2 D1 C1C1C1C1C1

		Medline Industries Inc. vs C.R Bard, Inc.. Exhibit A lo Declaration of Brian Eutermoser in Support of Medline Response to Bard Opening Claim Construction; Civil Action No. 1:16-cv-03529; Judge Sharon Johnson Coleman; Filed December 9, 2016.,	
		Medline Industries Inc. vs C.R Bard, Inc.. Exhibit A to Declaration of Dylan J Raife in Support of Bard's Reply Claim Construction Bnef; Civil Action No. t:14-cv-03618: Judge John Z. Lee; Filed August 15. 2016,	
		Medline Industries Inc. vs C.R Bard, Inc: Exhibit F to C.R. Bard's LPR 2.3 Contentions; Civil Action No. 1.17-cv-7216; Judge Sara L. Ellis; Filed January 16.2018.,	
		Medline Industries Inc. vs C.R Bard. Inc., Exhibit 4 to Declaration of Richard Meyst re Claim Construction; Civil Action No. 1:16-cv-03529: Judge Sharon Johnson Coleman; Filed December 9.2016.,	
		Medline Industries Inc. vs C.R Bard. Inc., Exhibit C to Declaration of Nicole Smith in Support of Bard Reply to Claim Construction Brief; Civil Action No. 1.16-cv-03529; Judge Sharon Johnson Coleman. Filed January 12. 2018.,	
		Medline Industries Inc. vs C.R Bard. Inc.. Exhibit 3 to Declaration of Richard Meyst re Claim Construction; Civil Action No. 1:16-cv-03529: Judge Sharon Johnson Coleman. Filed December 9,2016.,	
		Medline Industries Inc. vs C.R Bard. Inc.; Exhibit C to Declaration of Nicole Smith in Support of Bard Reply to Medline Claim Construction Brief; Civil Action No. 116-cv-03529; Judge Sharon Johnson Coleman; Filed January 27,2017,	
		Medline Industries Inc. vs C.R Bard. Inc.; Exhibit F to Declaration of Brian Eutermoser in Support of Medline Response to Bard Opening Claim Construction; Civil Action No. 1:16-cv-03529; Judge Sharon Johnson Coleman: Filed December 9, 2016.,	

ALL REFERENCES CONSIDERED EXCEPT WHERE LINED THROUGH. /AMM/

Doc code: IDS
Doc description: Information Disclosure Statement (IDS) Field

PTO/SB/08a (01-10)
Approved for use through 07/31/2012. OMB 0651-0031
U.S. Patent and Trademark Office; U.S. DEPARTMENT OF COMMERCE
Under the Paperwork Reduction Act of 1995, no persons are required to respond to a collection of information unless it contains a valid OMB control number.

INFORMATION DISCLOSURE STATEMENT BY APPLICANT (Not for submission under 37 CFR 1.99)		
	Application Number	16/944,667
	Filing Date	July 31, 2020
	First Named Inventor	Jennifer E. Tomes
	Art Unit	
	Examiner Name	
	Attorney Docket Number	10055U CIP2 D1 C1C1C1C1C1

		Medline Industries Inc. vs C.R. Bard, Inc.; Exhibit E to Declaration of Nicole Smith in Support of Bard Reply lo Claim Construction Brief; Civil Action No. 1.16-cv-03529. Judge Sharon Johnson Coleman. Filed January 12.2018.,	
		Medline Industries Inc. vs C.R. Bard, Inc; Exhibit A (List of Invalidating Prior Art) to C R. Bard's LPR 2 3 Contentions; Civil Action No. t:17-cv-7216; Judge Sara L. Ellis; Filed January 16.2018.,	
		Medline Industries inc. vs C R. Bard, Inc; Exhibit E to Declaration of Dylan Raife in Support of Motion for Leave to Add Counterclaims; Civil Action No. 1:17-cv-7216; Judge Sara L. Ellis; Filed February 27.2018.,	
		Medline industnes Inc, vs C.R Bard, Inc.; Exhibit A to Declaration of Nicole M. Smith; Civil Action No. 1:14-cv-03618; Judge John 2. Lee: Filed June 4, 2016.,	
		Medline industnes Inc. vs C R. Bard, Inc; C.R Bard's LPR 2 3 Contentions; Civil Action No. 1:17-cv-7216, Judge Sara L. Ellis; Filed January 16,2018.,	
		Medline Industnes Inc. vs C R. Bard, Inc; Declaration oi Nicole M Smith in Support of Bard Opening Claim Construction Brief; Civil Action No. 1:14-cv-03618: Judge John 2. Lee; Filed June 4,2016.,	
		Medline industnes Inc. vs C R. Bard, Inc; Exhibit B to Declaration of Dylan Raife in Support of Motion for Leave to Add Counterclaims; Civil Action No. 1:17-cv7216; Judge Sara L. Ellis; Filed February 27,2018.,	
		Medline Industnes inc. vs C R. Bard, Inc; Exhibit D to Declaration of Dylan Raife in Support of Motion for Leave to Add Counterclaims; Civil Action No. 1:17-cv-7216; Judge Sara L. Ellis: Filed February 27.2018.,	

ALL REFERENCES CONSIDERED EXCEPT WHERE LINED THROUGH. /AMM/

Doc code: IDS
Doc description: Information Disclosure Statement (IDS) Field

PTO/SB/08a (01-10)
Approved for use through 07/31/2012. OMB 0651-0031
U.S. Patent and Trademark Office; U.S. DEPARTMENT OF COMMERCE
Under the Paperwork Reduction Act of 1995, no persons are required to respond to a collection of information unless it contains a valid OMB control number.

INFORMATION DISCLOSURE STATEMENT BY APPLICANT (Not for submission under 37 CFR 1.99)		
	Application Number	16/944,667
	Filing Date	July 31, 2020
	First Named Inventor	Jennifer E. Tomes
	Art Unit	
	Examiner Name	
	Attorney Docket Number	10055U CIP2 D1 C1C1C1C1C1

		Medline Industnes Inc. vs C.R Bard, Inc.; Exhibit G to Declaration of Nicole M. Smith; Civil Action No 1:14-cv-03618; Judge John 2, Lee; Filed June 4, 2016.,	
		Medline Industnes Inc. vs C.R Bard, Inc.; Exhibit H to Declaration of Nicole M. Smith; Civil Action No. 1:14-cv-03618; Judge John 2. Lee; Filed June 4, 2016.,	
		Medline Industnes Inc. vs C R. Bard, Inc; Exhibit A- C R. Bards Second Amended Answer to Second Amended Complaint: Civil Action No. 1:!7-cv-7216; Judge Sara L Ellis; Filed February 27,2018.,	
		Medline Industries Inc. vs C.R Bard, Inc., Declaration of Barbara Weintraub re Claim Construction; Civil Action No. 1:16-cv-03529; Judge Sharon Johnson Coleman; Filed December 22.2017.,	
		Medline industries Inc. vs C.R Bard, Inc., Declaration of Dylan J Raife in Support of Bard Opening Claim Construction Brief; Civil Action No. 1:16-cv-03529; Judge Sharon Johnson Coleman; Filed November 17, 2017.,	
		Medline Industries Inc. vs C.R Bard, Inc., Declaration of Nicole Smith in Support of Bard Reply to Medline Claim Construction Brief; Civil Action No. 1:16-cv-03529; Judge Sharon Johnson Coleman; Filed January 27,2017.,	
		Medline Industries Inc. vs C.R Bard, Inc., Exhibit 1 to Declaration of Richard Meyst re Claim Construction; Civil Action No. 1:16-cv-03529; Judge Sharon Johnson Coleman; Filed December 9.2016.,	
		Medline Industries Inc. vs C.R Bard, Inc., Exhibit 2 lo Declaration of Richard Meyst re Claim Construction; Civil Action No. 1:16-cv-03529; Judge Sharon Johnson Coleman; Filed December 9,2016.,	

ALL REFERENCES CONSIDERED EXCEPT WHERE LINED THROUGH. /AMM/

Doc code: IDS
Doc description: Information Disclosure Statement (IDS) Field

PTO/SB/08a (01-10)
Approved for use through 07/31/2012. OMB 0651-0031
U.S. Patent and Trademark Office; U.S. DEPARTMENT OF COMMERCE
Under the Paperwork Reduction Act of 1995, no persons are required to respond to a collection of information unless it contains a valid OMB control number.

INFORMATION DISCLOSURE STATEMENT BY APPLICANT (Not for submission under 37 CFR 1.99)		
	Application Number	16/944,667
	Filing Date	July 31, 2020
	First Named Inventor	Jennifer E. Tomes
	Art Unit	
	Examiner Name	
	Attorney Docket Number	10055U CIP2 D1 C1C1C1C1C1

		Medline Industries Inc. vs C.R Bard, Inc., Exhibit 7 to Declaration of Richard Meyst Regarding Claim Construction: Civil Action No. 1:14-cv-03618; Judge John Z. Lee; Filed July 8.2016.,	
		Medline Industries Inc. vs C.R Bard, Inc., Exhibit A to Declaration of Dylan J Raife in Support of Bard Opening Claim Construction Brief; Civil Action No. 1;16-cv-03529; Judge Sharon Johnson Coleman; Filed November 11,2016.,	
		Medline Industries Inc. vs C.R Bard, Inc., Exhibit A to Declaration of Kevin A. Lake. Civil Action No. 1:14-cv-03618; Judge John Z. Lee; Filed July 8,2016.,	
		Medline Industries Inc. vs C.R Bard, Inc., Exhibit B to Declaration of Brian Eutermoser in Support of Medline Response to Bard Opening Claim Construction; Civil Action No. 1:16-cv-03529: Judge Sharon Johnson Coleman: Filed December 9,2016.,	
		Medline industries Inc. vs C.R Bard, inc., Exhibit F to Declaration of Dyian J. Raife in Support of Bard Opening Claim Construction Brief, Civil Action No. 1:16-cv-03529; Judge Sharon Johnson Coleman; Filed November 11, 2016.,	
		Medline Industries Inc. vs C.R Bard, Inc., Exhibit F to Declaration of Nicole Smith in Support of Bard Reply to Medline Claim Construction Brief; Civil Action No. 1:16-cv-03529; Judge Sharon Johnson Coleman; Filed January 27,2017.,	
		Medline Industries Inc. vs C.R Bard, Inc., Exhibit H to Declaration of Kevin A. Lake; Civil Action No. 1:14-cv-03618: Judge John Z. Lee; Filed July 8,2016.,	
		Medline Industries Inc. vs C.R Bard, Inc.. Bard Opening Claim Construction Bnef; Civil Action No 1" 16-cv-03529; Judge Sharon Johnson Coleman; Filed November 11.2016.,	

ALL REFERENCES CONSIDERED EXCEPT WHERE LINED THROUGH. /AMM/

Doc code: IDS
Doc description: Information Disclosure Statement (IDS) Field

PTO/SB/08a (01-10)
Approved for use through 07/31/2012. OMB 0651-0031
U.S. Patent and Trademark Office; U.S. DEPARTMENT OF COMMERCE
Under the Paperwork Reduction Act of 1995, no persons are required to respond to a collection of information unless it contains a valid OMB control number.

INFORMATION DISCLOSURE STATEMENT BY APPLICANT (Not for submission under 37 CFR 1.99)		
	Application Number	16/944,667
	Filing Date	July 31, 2020
	First Named Inventor	Jennifer E. Tomes
	Art Unit	
	Examiner Name	
	Attorney Docket Number	10055U CIP2 D1 C1C1C1C1C1

		Medline Industries Inc. vs C.R Bard, Inc.. Declaration of Dylan J Raife in Support of Bard's Reply Claim Construction Brief: Civil Action No. I:14-cv-03518; Judge John 2. Lee; Fiied August 15.2016.,	
		Medline Industries Inc. vs C.R Bard, Inc.. Exhibit 1 to Declaration of Dylan J. Raife in Support of Bard Opening Claim Construction Brief; Civil Action No. 1:16-cv-03529; Judge Sharon Johnson Coleman; Filed November 11,2016.,	
		Medline Industries Inc. vs C.R Bard, Inc.. Exhibit 10 to Declaration of Richard Meyst Regarding Claim Construction: Civil Action No. 1:14-cv-03618; Judge John Z. Lee; Filed July 8,2016.,	
		Medline Industries Inc. vs C.R Bard, Inc.. Exhibit 2 to Declaration of Brian Eutermoser in Support of Medline Surrepiy: Civil Action No. 1:14-cv-03618; Judge John Z. Lee; Filed September 7,2016.,	
		Medline Industries Inc. vs C.R Bard, Inc.. Exhibit C to Declaration of Dylan J Raife in Support of Bard Opening Claim Construction Brief; Civil Action No. 1:16-cv-03529; Judge Sharon Johnson Coleman: Filed November 11,2016.,	
		Medline Industries Inc. vs C.R Bard, Inc.. Exhibit E to Declaration of Nicole Smith in Support of Bard Reply to Medline Claim Construction Brief; Civil Action No 1:16-cv-03529; Judge Sharon Johnson Coleman; Filed January 27.2017.,	
		Medline Industries Inc. vs C.R Bard, Inc.. Exhibit I to Declaration of Brian Eutermoser in Support of Medline Response to Bard Opening Claim Construction; Civil Action No. 1:16-cv-03529; Judge Sharon Johnson Coleman; Filed December 9,2016.,	
		Medline Industries Inc. vs C.R Bard, Inc.. Exhibit i to Declaration of Nicoie M. Smith, Civil Action No. 1:14-cv-03618: Judge John Z. Lee; Filed June 4,2016.,	

ALL REFERENCES CONSIDERED EXCEPT WHERE LINED THROUGH. /AMM/

Doc code: IDS
Doc description: Information Disclosure Statement (IDS) Field

PTO/SB/08a (01-10)
Approved for use through 07/31/2012. OMB 0651-0031
U.S. Patent and Trademark Office; U.S. DEPARTMENT OF COMMERCE
Under the Paperwork Reduction Act of 1995, no persons are required to respond to a collection of information unless it contains a valid OMB control number.

INFORMATION DISCLOSURE STATEMENT BY APPLICANT (Not for submission under 37 CFR 1.99)		
	Application Number	16/944,667
	Filing Date	July 31, 2020
	First Named Inventor	Jennifer E. Tomes
	Art Unit	
	Examiner Name	
	Attorney Docket Number	10055U CIP2 D1 C1C1C1C1C1

		Medline Industries Inc. vs C.R Bard, Inc.; Bard Reply to Medline Claim Construction Brief; Civil Action No 1 l6-cv-03529; Judge Sharon Johnson Coleman; Filed January 27,2017.,	
		Medline Industries Inc. vs C.R Bard, Inc.; C. R. Bard's Reply in Support of Claim Construction Brief; Civil Action No. 1.14-cv-03618, Judge John Z. Lee; Filed August 15,2016.,	
		Medline Industries Inc. vs C.R Bard, Inc.; Declaration of Karl L Leinsing in Support of Bard's Rebuttal on Claim Construction; Civil Action No 1:16-CV-03529; Judge Sharon Johnson Coleman; Filed January 12, 2018,	
		Medline Industries Inc. vs C.R Bard, Inc.; Declaration of Karl L. Leinsing in Support of Bard's Rebuttal on Claim Construction; Civil Action No. 1.14-cv-03618. Judge John Z. Lee; Filed August 15,2016.,	
		Medline Industries Inc. vs C.R Bard, Inc.; Declaration of Richard Meyst re Claim Construction; Civil Action No. 1.16-cv-03529. Judge Sharon Johnson Coleman; Filed December 9,2016.,	
		Medline Industries Inc. vs C.R Bard, Inc.; Exhibit 1 to Declaration of Karl L Leinsing in Support of Bard's Rebuttal on Claim Construction; Civil Action No. 1.14-cv-03618; Judge John Z. Lee, Filed August 15, P016,	
		Medline Industries Inc. vs C.R Bard, Inc.; Exhibit 1 to Declaration of Karl R Leinsing in Support of Bard Reply to Medline Claim Construction Brief; Civil Action No. 1:16-cv-03529; Judge Sharon Johnson Coleman; Filed January 27.2017,	
		Medline Industries Inc. vs C.R Bard, Inc.; Exhibit 3 to Declaration of Richard Meyst Regarding Claim Construction; Civil Action No. 1:14-cv-03618; Judge John Z. Lee, Filed July 8.2016.,	

ALL REFERENCES CONSIDERED EXCEPT WHERE LINED THROUGH. /AMM/

Doc code: IDS
Doc description: Information Disclosure Statement (IDS) Field

PTO/SB/08a (01-10)
Approved for use through 07/31/2012. OMB 0651-0031
U.S. Patent and Trademark Office; U.S. DEPARTMENT OF COMMERCE
Under the Paperwork Reduction Act of 1995, no persons are required to respond to a collection of information unless it contains a valid OMB control number.

INFORMATION DISCLOSURE STATEMENT BY APPLICANT (Not for submission under 37 CFR 1.99)		
	Application Number	16/944,667
	Filing Date	July 31, 2020
	First Named Inventor	Jennifer E. Tomes
	Art Unit	
	Examiner Name	
	Attorney Docket Number	10055U CIP2 D1 C1C1C1C1C1

		Medline Industries Inc. vs C.R Bard, Inc.; Exhibit 4 to Declaration of Richard Meyst Regarding Claim Construction; Civil Action No. 1:14-cv-03618; Judge John Z. Lee. Filed July 8.2016.,	
		Medline Industries Inc. vs C.R Bard, Inc.; Exhibit A to Declaration of Barbara Weintraub re Claim Construction; Civil Action No. 1:16-cv-03529; Judge Sharon Johnson Coleman. Filed December 9.2016.,	
		Medline Industries Inc. vs C.R Bard, Inc.; Exhibit B to Declaration of Nicole Smith in Support of Bard Reply to Claim Construction Brief; Civil Action No. 1;16-cv-03529. Judge Sharon Johnson Coleman. Filed January 12.2018.,	
		Medline Industries Inc. vs C.R Bard, Inc.; Exhibit B to Declaration ot Dylan J Raife in Support of Bard's Reply Claim Construction Brief; Civil Action No. 1:14-cv-03618; Judge John Z. Lee; Filed August 15. 2016.,	
		Medline Industries Inc. vs C.R Bard, Inc.; Exhibit C to Declaration of Dylan J Raife in Support of Bard's Reply Claim Construction Brief; Civil Action No. 1:14-cv 03618; Judge John Z. Lee; Filed August 15, 2016,	
		Medline Industries Inc. vs C.R Bard, Inc.; Exhibit D to Declaration of Brian Eutermoser in Support of Medline Response to Bard Opening Claim Construction; Civil Action No. 1:16-cv-03529; Judge Sharon Johnson Coleman; Filed December 9,2016.,	
		Medline Industries Inc. vs C.R Bard, Inc.; Exhibit D to Declaration of Dylan J Raife in Support of Bard's Reply Claim Construction Brief: Civil Action No. 1.14-cv-03618; Judge John Z. Lee. Filed August 15. 2016,	
		Medline Industries Inc. vs C.R Bard, Inc.; Exhibit D to Declaration of Nicole Smith in Support of Bard Reply to Medline Claim Construction Brief; Civil Action No. 1.16-cv-03529; Judge Sharon Johnson Coleman; Filed January 27.2017,	

ALL REFERENCES CONSIDERED EXCEPT WHERE LINED THROUGH. /AMM/

Doc code: IDS
Doc description: Information Disclosure Statement (IDS) Field

PTO/SB/08a (01-10)
Approved for use through 07/31/2012. OMB 0651-0031
U.S. Patent and Trademark Office; U.S. DEPARTMENT OF COMMERCE
Under the Paperwork Reduction Act of 1995, no persons are required to respond to a collection of information unless it contains a valid OMB control number.

INFORMATION DISCLOSURE STATEMENT BY APPLICANT (Not for submission under 37 CFR 1.99)		
	Application Number	16/944,667
	Filing Date	July 31, 2020
	First Named Inventor	Jennifer E. Tomes
	Art Unit	
	Examiner Name	
	Attorney Docket Number	10055U CIP2 D1 C1C1C1C1C1

		Medline Industries Inc. vs C.R Bard, Inc.; Exhibit E to Declaration of Kevin A. Lake; Civil Action No. 1:14-cv-03618, Judge John Z. Lee; Filed July 8.2016.,	
		Medline Industries Inc. vs C.R Bard, Inc.; Exhibit F lo Declaration of Kevin A Lake: Civil Action No 1:14-cv-03618. Judge John Z. Lee; Filed July 8,2016.,	
		Medline Industries Inc. vs C.R Bard, Inc.; Exhibit F to Declaration of Dylan J. Raife in Support of Bard's Reply Claim Construction Brief; Civil Action No. 1. l4-cv-03618; Judge John Z. Lee, Filed August 15, 2016,	
		Medline Industries Inc. vs C.R Bard, Inc.; Exhibit G to Declaration of Kevin A. Lake; Civil Action No. 1:14-cv-03618. Judge John Z. Lee; Filed July 8,2016.,	
		Medline Industries Inc. vs C.R Bard, Inc.; Exhibit G to Declaration of Nicole Smith in Support of Bard Reply to Medline Claim Construction Brief: Civil Action No 1:16-cv-03529: Judge Sharon Johnson Coleman; Filed January 27.2017,	
		Medline Industries Inc. vs C.R Bard, Inc.; Exhibit H to Declaration of Brian Eutermoser in Support of Medline Response to Bard Opening Claim Construction; Civil Action No. 1:16-cv-03529; Judge Sharon Johnson Coleman; Filed December 9, 2016.,	
		Medline Industries Inc. vs C.R Bard, Inc.; Exhibit H to Declaration of Dylan J. Raife in Support of Bard Opening Claim Construction Brief. Civil Action Mo. 1:16-cv-Q3529; Judge Sharon Johnson Coleman; Filed November 11,2016.,	
		Medline Industries Inc. vs C.R Bard, Inc.; Exhibit I to Declaration of Kevin A. Lake; Civil Action No. 1.14-sv-03618; Judge John 2. Lee; Filed July 8,2016.,	

ALL REFERENCES CONSIDERED EXCEPT WHERE LINED THROUGH. /AMM/

Doc code: IDS
Doc description: Information Disclosure Statement (IDS) Field

PTO/SB/08a (01-10)
Approved for use through 07/31/2012. OMB 0651-0031
U.S. Patent and Trademark Office; U.S. DEPARTMENT OF COMMERCE
Under the Paperwork Reduction Act of 1995, no persons are required to respond to a collection of information unless it contains a valid OMB control number.

INFORMATION DISCLOSURE STATEMENT BY APPLICANT (Not for submission under 37 CFR 1.99)		
	Application Number	16/944,667
	Filing Date	July 31, 2020
	First Named Inventor	Jennifer E. Tomes
	Art Unit	
	Examiner Name	
	Attorney Docket Number	10055U CIP2 D1 C1C1C1C1C1

		Medline Industries Inc. vs C.R Bard, Inc.; Exhibit N to Declaration of Brian Eutermoser in Support of Medline Response to Bard Opening Claim Construction; Civil Action No. 1:16-cv-03529; Judge Sharon Johnson Coleman; Filed December 9,2016.,	
		Medline Industries Inc. vs C.R Bard, Inc.; Medline Memo of Law re Expert Testimony in Claim Construction Proceedings; Civil Action No. 1;14-cv-03618; Judge John Z. Lee. Filed January 25,2017.,	
		Medline industries Inc. vs C.R Bard, Inc.; Medline Surreply to Claim Construction Bnef; Civil Action No 1.14-CV-Q3618: Judge John Z. Lee; Filed September 7,2016.,	
		Medline Industries Inc. vs C.R Bard, Inc.; Transcript of Deposition ot Richard Meyst; Civil Action No 1:16-W-03529. January 20,2017.,	
		Medline Industries Inc. vs C.R Bard, Inc: Exhibit G to C.R Bard's LPR 2.3 Contentions; Civil Action No. 1.17-cv-7216; Judge Sara L Ellis; Fiied January 16.2013.,	
		Medline Industries Inc. vs C.R Bard, Inc; Exhibit 3 to C.R. Bard's LPR 2.3 Contentions; Civil Action No. 1:17-CV-7216; Judge Sara L Ellis; Filed January 16,2018.,	
		Medline Industries Inc. vs C.R Bard, Inc; Exhibit C to C.R. Bard's LPR 2.3 Contentions; Civil Action No 1:17-cv-7216; Judge Sara L. Ellis; Filed January 16.2018.,	
		Medline Industries Inc. vs C.R Bard, Inc; Exhibit D to C.R. Bard's LPR 2.3 Contentions; Civil Action No 1:17-cv-7216; Judge Sara L. Etlis; Filed January 16.2018.,	

ALL REFERENCES CONSIDERED EXCEPT WHERE LINED THROUGH. /AMM/

Doc code: IDS
Doc description: Information Disclosure Statement (IDS) Field

PTO/SB/08a (01-10)
Approved for use through 07/31/2012. OMB 0651-0031
U.S. Patent and Trademark Office; U.S. DEPARTMENT OF COMMERCE
Under the Paperwork Reduction Act of 1995, no persons are required to respond to a collection of information unless it contains a valid OMB control number.

INFORMATION DISCLOSURE STATEMENT BY APPLICANT (Not for submission under 37 CFR 1.99)		
	Application Number	16/944,667
	Filing Date	July 31, 2020
	First Named Inventor	Jennifer E. Tomes
	Art Unit	
	Examiner Name	
	Attorney Docket Number	10055U CIP2 D1 C1C1C1C1C1

		Medline Industries Inc. vs C.R Bard, Inc; Exhibit E to C R. Bard's LPR 2.3 Contentions; Civil Action No. 1;17-cv-7216; Judge Sara L. Ellis; Fiied January 16, 2018.,	
		Medline Industries Inc. vs C.R Bard. Inc, Exhibit H loC.R. Bard's LPR 2.3 Contentions. Civil Action No 1:17-CV-7216; Judge Sara L. Ellis: Filed January 16.2018.,	
		Medline industries Inc. vs C.R Bard. Inc., Declaration of Brian Eutermoser in Support of Medline Surreply. Civil Action No. 1:14-cv-03618, Judge John Z. Lee; Filed September 7,2016.,	
		Medline Industries Inc. vs C.R Bard. Inc., Exhibit 8 lo Declaration of Richard Meyst Regarding Claim Construction: Civil Action No. 1:14-cv-03618: Judge John Z. Lee: Filed July 8.2016.,	
		Medline Industries Inc. vs C.R Bard. Inc., Exhibit A to Declaration of Barbara Weintraub Regarding Claim Construction: Civil Action No. 1.14-cv-03618. Judge John Z. Lee; Filed July 8,2016.,	
		Medline Industries Inc. vs C.R Bard. Inc., Exhibit A to Declaration of Nicole Smith in Support of Bard Repiy lo Medline Claim Construction Brief; Civil Action No. 1.16-cv-03529; Judge Sharon Johnson Coleman; Filed January 27.2017,	
		Medline Industries Inc. vs C.R Bard. Inc., Exhibit B to Declaration of Dylan J Raife in Support of Bard Opening Claim Construction Brief; Civil Action No. 1:16-cv-03529; Judge Sharon Johnson Coleman; Filed November 11,2016.,	
		Medline Industries Inc. vs C.R Bard. Inc., Exhibit E to Declaration of Dylan J Raife in Support of Bard's Reply Claim Construction Brief; Civil Action No. 1.14-cv-03618; Judge John Z. Lee, Filed August 15, 2016,	

ALL REFERENCES CONSIDERED EXCEPT WHERE LINED THROUGH. /AMM/

Doc code: IDS
Doc description: Information Disclosure Statement (IDS) Field

PTO/SB/08a (01-10)
Approved for use through 07/31/2012. OMB 0651-0031
U.S. Patent and Trademark Office; U.S. DEPARTMENT OF COMMERCE
Under the Paperwork Reduction Act of 1995, no persons are required to respond to a collection of information unless it contains a valid OMB control number.

INFORMATION DISCLOSURE STATEMENT BY APPLICANT (Not for submission under 37 CFR 1.99)		
	Application Number	16/944,667
	Filing Date	July 31, 2020
	First Named Inventor	Jennifer E. Tomes
	Art Unit	
	Examiner Name	
	Attorney Docket Number	10055U CIP2 D1 C1C1C1C1C1

		Medline Industries Inc. vs C.R Bard. Inc.. Declaration of Richard Meyst Regarding Claim Construction; Civil Action No. 1:14-cv-03618; Judge John 2. Lee; Filed July 8.2016.,	
		Medline Industries Inc. vs C.R Bard. Inc.. Exhibit 11 to Declaration of Richard Meyst re Claim Construction: Civil Action No. 1:16-cv-03529; Judge Sharon Johnson Coleman; Filed December 9,2016.,	
		Medline Industries Inc. vs C.R Bard. Inc.. Exhibit A to Declaration of Richard Meyst Regarding Claim Construction; Civil Action No. 1;14-cv-03618; Judge John Z. Lee; Filed July 8,2016.,	
		Medline Industries Inc. vs C.R Bard. Inc.. Medline Motion lo Supplement Record on Claim Construction with Leinsing Testimony; Civil Action No 1:14-w-03618; Judge John Z. Lee; Filed March 23,2017.,	
		Medline Industries Inc. vs C.R Bard. Inc.; Bard Reply Claim Construction Brief; Civil Action No. 1:16-cv-03529; Judge Sharon Johnson Coleman; Filed January 12,2018.,	
		Medline Industries Inc. vs C.R Bard. Inc.; Bard Response to Memo of Law re Expert Testimony in Claim Construction Proceedings; Civil Action No. 1:14-cv-03618; Judge John Z. Lee. Filed February 8, 2017.,	
		Medline Industries Inc. vs C.R Bard. Inc.; Declaration of Brian Eutermoser in Support of Medline Response to Bard Opening Claim Construction Brief. Civil Action No. 1:16-cv-03529; Judge Sharon Johnson Coleman; Filed December 22,2017,	
		Medline Industries Inc. vs C.R Bard. Inc.; Declaration of Brian Eutermoser in Support of Medline Response to Bard Opening Claim Construction Brief. Civil Action No. 1:16-cv-03529; Judge Sharon Johnson Coleman; Filed December 22,2017,	

ALL REFERENCES CONSIDERED EXCEPT WHERE LINED THROUGH. /AMM/

Doc code: IDS
Doc description: Information Disclosure Statement (IDS) Field

PTO/SB/08a (01-10)
Approved for use through 07/31/2012. OMB 0651-0031
U.S. Patent and Trademark Office; U.S. DEPARTMENT OF COMMERCE
Under the Paperwork Reduction Act of 1995, no persons are required to respond to a collection of information unless it contains a valid OMB control number.

INFORMATION DISCLOSURE STATEMENT BY APPLICANT (Not for submission under 37 CFR 1.99)		
	Application Number	16/944,667
	Filing Date	July 31, 2020
	First Named Inventor	Jennifer E. Tomes
	Art Unit	
	Examiner Name	
	Attorney Docket Number	10055U CIP2 D1 C1C1C1C1C1

		Medline Industries Inc. vs C.R Bard. Inc.; Declaration of Karl R. leinsing in Support of Bard Reply io Medline Claim Construction Brief; Civil Action No. 1:16-cv-03529; Judge Sharon Johnson Coleman; Filed January 27, 2017.,	
		Medline Industries Inc. vs C.R Bard. Inc.; Exhibit 3 to Declaration of Peter Sauer in Support of Medline's Motion to Supplement Record; Civil Action No. 1:14-cv-03618: Judge John Z. Lee. Filed March 23.2017.,	
		Medline Industries Inc. vs C.R Bard. Inc.; Exhibit 8 to Declaration of Richard Meyst re Claim Construction; Civil Action No. 1:16-cv-03529; Judge Sharon Johnson Coleman; Filed December 9.2016,	
		Medline Industries Inc. vs C.R Bard. Inc.; Exhibit C to Declaration of Kevin A. Lake; Civil Action No. 1 14-cv-03618. Judge John Z. Lee; Filed July 8,2016.,	
		Medline Industries Inc. vs C.R Bard. Inc.; Exhibit G to Declaration of Dylan J. Raife in Support of Bard Opening Claim Construction Brief, Civil Action No. 1:16-cv-03529; Judge Sharon Johnson Coleman; Filed November 17,2017.,	
		Medline Industries Inc. vs C.R Bard. Inc.; Exhibit G to Declaration of Brian Eutermoser in Support of Medline Response to Bard Opening Claim Construction; Civil Action No. 1:16-cv-03529; Judge Sharon Johnson Coleman; Filed December 9.2016.,	
		Medline industries Inc. vs C.R Bard. Inc.; Exhibit H to Declaration of Dylan J Raife in Support of Bard Opening Claim Construction Brief, Civil Action No. 1:16-cv-03529; Judge Sharon Johnson Coleman; Filed November 17,2017.,	
		Medline Industries Inc. vs C.R Bard. Inc.; Medline Response to Bard Opening Claim Construction; Civil Action No. 1:16-cv-03529; Judge Sharon Johnson Coleman; Filed Decembers, 2016,	

ALL REFERENCES CONSIDERED EXCEPT WHERE LINED THROUGH. /AMM/

Doc code: IDS
Doc description: Information Disclosure Statement (IDS) Field

PTO/SB/08a (01-10)
Approved for use through 07/31/2012. OMB 0651-0031
U.S. Patent and Trademark Office; U.S. DEPARTMENT OF COMMERCE
Under the Paperwork Reduction Act of 1995, no persons are required to respond to a collection of information unless it contains a valid OMB control number.

INFORMATION DISCLOSURE STATEMENT BY APPLICANT (Not for submission under 37 CFR 1.99)		
	Application Number	16/944,667
	Filing Date	July 31, 2020
	First Named Inventor	Jennifer E. Tomes
	Art Unit	
	Examiner Name	
	Attorney Docket Number	10055U CIP2 D1 C1C1C1C1C1

		Medline Industries Inc. vs C.R Bard. Inc.; Transcript of Deposition of Barbara A Weinlraub; Civil Action Mo. 1:16-cv-03529; January 20.2017.,	
		Medline Industries Inc. vs C.R Bard. Inc.; Transcript of Deposition of Karl Leinsing; Civil Action No. 1:16-cv-03529; February 17,2017,	
		Medline industries Inc. vs C.R Sard, Inc.; Exhibit 9 to Declaration of Richard Meyst re Claim Construction; Civil Action No. 1:16-cv-03529; Judge Sharon Johnson Coleman; Filed December 9.2016.,	
		Medline Industries Inc. vs C.R. Bard, Inc., Bard Response to Medline Surreply re Claim Construction; Civil Action No. 1:14-cv-03618; Judge John Z. Lee; Filed September 13.2016.,	
		Medline Industries Inc. vs C.R. Bard, Inc., Exhibit 2 to Declaration of Karl L. Lansing in Support of Bard's Rebuttal on Claim Construction: Civil Action No. 1:14-cv-03618; Judge John Z. Lee; Filed August 15. 2016,	
		Medline Industries Inc. vs C.R. Bard, Inc., Exhibit B to Declaration of Kevin A. Lake. Civil Action No. 1:14-cv-03618; Judge John Z. Lee; Filed July 8,2016.,	
		Medline Industries Inc. vs C.R. Bard, Inc., Exhibit D to Declaration of Nicole Smith in Support of Bard Reply to Claim Construction Brief; Civil Action No. 116-cv-03529; Judge Sharon Johnson Coleman. Filed January 12.2018.,	
		Medline Industries Inc. vs C.R. Bard, Inc., Exhibit J to Declaration of Brian Eutermoser in Support of Medline Response to Bard Opening Claim Construction; Civil Action No. 1:16-cv-03529: Judge Sharon Johnson Coleman; Filed December 9.2016.,	

ALL REFERENCES CONSIDERED EXCEPT WHERE LINED THROUGH. /AMM/

Doc code: IDS
Doc description: Information Disclosure Statement (IDS) Field

PTO/SB/08a (01-10)
Approved for use through 07/31/2012. OMB 0651-0031
U.S. Patent and Trademark Office; U.S. DEPARTMENT OF COMMERCE
Under the Paperwork Reduction Act of 1995, no persons are required to respond to a collection of information unless it contains a valid OMB control number.

INFORMATION DISCLOSURE STATEMENT BY APPLICANT (Not for submission under 37 CFR 1.99)		
	Application Number	16/944,667
	Filing Date	July 31, 2020
	First Named Inventor	Jennifer E. Tomes
	Art Unit	
	Examiner Name	
	Attorney Docket Number	10055U CIP2 D1 C1C1C1C1C1

		Medline Industries Inc. vs C.R. Bard, Inc., Exhibit K to Declaration of Brian Eutermoser in Support of Medline Response to Bard Opening Claim Construction; Civil Action No. 1:16-cv-03529: Judge Sharon Johnson Coleman; Filed December 9 2016,,	
		Medline Industries Inc. vs C.R. Bard, Inc.. Exhibit 1 to Declaration of Peter Sauer in Support of Medline's Motion to Supplement Record; Civil Action No. 1:14-cv-03618; Judge John Z. Lee; Filed March 23.2017,	
		Medline Industries Inc. vs C.R. Bard, Inc.. Exhibit 9 to Declaration of Richard Meyst Regarding Claim Construction; Civil Action No. 1:14-cv-03618; Judge John Z. Lee; Filed July 8. 2016.,	
		Medline Industries Inc. vs C.R. Bard, Inc.. Exhibit L to Declaration of Brian Eutermoser in Support of Medline Response to Bard Opening Claim Construction; Civil Action No. 1:16-cv-03529: Judge Sharon Johnson Coleman: Filed December 9,2016.,	
		Medline Industries Inc. vs C.R. Bard, Inc.. Medline Response to Bard Claim Construction Brief. Civil Action No. 1:14~cv-03618: Judge John Z. Lee; Filed July 8,2016.,	
		Medline Industries Inc. vs C.R. Bard, Inc.: Exhibit 2 to C.R. Bard's LPR 2.3 Contentions; Civil Action No. 117-CV-7216; Judge Sara L Eiiis; Filed January 16.2018.,	
		Medline Industries Inc. vs C.R. Bard, Inc.; Declaration of Barbara Weintraub re Claim Construction: Civil Action No. 1.16-cv-03529. Judge Sharon Johnson Coleman; Filed December 9,2016.,	
		Medline Industries Inc. vs C.R. Bard, Inc.; Declaration of Brian Eutermoser in Support of Medline Response to Bard Opening Claim Construction; Civil Action No. 1:16-cv-03529; Judge Sharon Johnson Coleman; Filed December 9, 2016,	

ALL REFERENCES CONSIDERED EXCEPT WHERE LINED THROUGH. /AMM/

Doc code: IDS
Doc description: Information Disclosure Statement (IDS) Field

PTO/SB/08a (01-10)
Approved for use through 07/31/2012. OMB 0651-0031
U.S. Patent and Trademark Office; U.S. DEPARTMENT OF COMMERCE
Under the Paperwork Reduction Act of 1995, no persons are required to respond to a collection of information unless it contains a valid OMB control number.

INFORMATION DISCLOSURE STATEMENT BY APPLICANT (Not for submission under 37 CFR 1.99)		
	Application Number	16/944,667
	Filing Date	July 31, 2020
	First Named Inventor	Jennifer E. Tomes
	Art Unit	
	Examiner Name	
	Attorney Docket Number	10055U CIP2 D1 C1C1C1C1C1

		Medline Industries Inc. vs C.R. Bard, Inc.; Declaration of Nicole Smith in Support of Bard Reply to Claim Construction Brief; Civil Action No. l:16-cv-03529; Judge Sharon Johnson Coleman; Filed January 12. 2018,	
		Medline Industries Inc. vs C.R. Bard, Inc.; Exhibit 10 lo Declaration of Richard Meyst re Claim Construction; Civil Action No. 1:16-cv-03529; Judge Sharon Johnson Coleman; Filed December 9.2016.,	
		Medline Industries Inc. vs C.R. Bard, Inc.; Exhibit 2 to Declaration of Peter Sauer in Support of Medline's Motion to Supplement Record; Civil Action No. 1:14-cv-03618; Judge John Z. Lee. Filed March 23. 2017.,	
		Medline Industries Inc. vs C.R. Bard, Inc.; Exhibit 5 to Declaration of Richard Meyst re Claim Construction: Civil Action No. 1:16-cv-03529; Judge Sharon Johnson Coleman, Filed December 9.2016.,	
		Medline Industries Inc. vs C.R. Bard, Inc.; Exhibit 6 to Declaration of Richard Meyst re Claim Construction; Civil Action No. 1:16-cv-03529; Judge Sharon Johnson Coleman. Filed December 9.2016.,	
		Medline Industries Inc. vs C.R. Bard, Inc.; Exhibit 7 to Declaration of Richard Meyst re Claim Construction; Civil Action No. 1:16-cv-03529; Judge Sharon Johnson Coleman; Filed December 9.2016.,	
		Medline Industries Inc. vs C.R. Bard, Inc.; Exhibit C to Declaration of Brian Eutermoser in Support of Medline Response to Bard Opening Claim Construction; Civil Action No. 1:16-cv-03529; Judge Sharon Johnson Coleman; Filed December 9,2016.,	
		Medline Industries Inc. vs C.R. Bard, Inc.; Exhibit E to Declaration of Brian Eutermoser in Support of Medline Response to Bard Opening Claim Construction; Civil Action No. 1:16-cv-03529; Judge Sharon Johnson Coleman; Filed December 9,2016.,	

ALL REFERENCES CONSIDERED EXCEPT WHERE LINED THROUGH. /AMM/

Doc code: IDS
Doc description: Information Disclosure Statement (IDS) Field

PTO/SB/08a (01-10)
Approved for use through 07/31/2012. OMB 0651-0031
U.S. Patent and Trademark Office; U.S. DEPARTMENT OF COMMERCE
Under the Paperwork Reduction Act of 1995, no persons are required to respond to a collection of information unless it contains a valid OMB control number.

INFORMATION DISCLOSURE STATEMENT BY APPLICANT (Not for submission under 37 CFR 1.99)		
	Application Number	16/944,667
	Filing Date	July 31, 2020
	First Named Inventor	Jennifer E. Tomes
	Art Unit	
	Examiner Name	
	Attorney Docket Number	10055U CIP2 D1 C1C1C1C1C1

		Medline Industries Inc. vs C.R. Bard, Inc.; Exhibit M to Declaration of Brian Eutermoser in Support of Medline Response to Bard Opening Claim Construction; Civil Action No. 1:16-cv-03529; Judge Sharon Johnson Coleman; Filed December 9,2016.,	
		Medline Industries Inc. vs C.R. Bard. Inc., Exhibit 2 to Declaration of Richard Meyst Regarding Claim Construction: Civil Action No. 1:14-cv-03618; Judge John 2. Lee. Filed July 8.2016.,	
		Medline Industries Inc. vs C.R. Bard. Inc.; Exhibit 5 to Declaration of Richard Meyst Regarding Claim Construction; Civil Action No. 1:14-cv-03618; Judge John Z. Lee. Filed July 8.2016.,	
		Medline Industries Inc. vs C.R. Bard. Inc.; Exhibit 6 to Declaration of Richard Meyst Regarding Claim Construction; Civil Action No. 1:14-cv-03618; Judge John Z. Lee. Filed July 8, 2016,	
		Medline industries Inc. vs C.R. Bard. Inc.; Medline Response to Bard Opening Claim Construction Brief; Civil Action No. t:16-cv-03529; Judge Sharon Johnson Coleman; Filed December 22,2017.,	
		Medline Industries Inc. vs OR. Bard, Inc.; Exhibit E to Declaration of Dylan J Raife in Support of Bard Opening Claim Construction Brief; Civil Action No. 1:16-cv-03529; Judge Sharon Johnson Coleman; Filed November 11.2016.,	
		Medline Industries Inc. vs C.R Bard, Inc, Exhibit I to C.R. Bard's LPR 2.3 Contentions. Civil Action No 1:17-cv-7216; Judge Sara L. Ellis; Filed January 16.2018.,	
		Medline Industries Inc. vs C.R Bard, Inc., Declaration of Dylan J Raife in Support of Bard Opening Claim Construction Brief; Civil Action No. 1:16-cv-03529; Judge Sharon Johnson Coleman; Filed November 11,2016.,	

ALL REFERENCES CONSIDERED EXCEPT WHERE LINED THROUGH. /AMM/

Doc code: IDS
Doc description: Information Disclosure Statement (IDS) Field

PTO/SB/08a (01-10)
Approved for use through 07/31/2012. OMB 0651-0031
U.S. Patent and Trademark Office; U.S. DEPARTMENT OF COMMERCE
Under the Paperwork Reduction Act of 1995, no persons are required to respond to a collection of information unless it contains a valid OMB control number.

INFORMATION DISCLOSURE STATEMENT BY APPLICANT (Not for submission under 37 CFR 1.99)		
	Application Number	16/944,667
	Filing Date	July 31, 2020
	First Named Inventor	Jennifer E. Tomes
	Art Unit	
	Examiner Name	
	Attorney Docket Number	10055U CIP2 D1 C1C1C1C1C1

		Medline Industries Inc. vs C.R Bard, Inc., Exhibit 11 to Declaration of Richard Meyst Regarding Claim Construction; Civil Action No. 1:14-cv-03618; Judge John Z Lee; Filed July 8.2016.,	
		Medline Industries Inc. vs C.R Bard, Inc.. Declaration of Kevin A. Lake in Support of Medline Response to Bard Claim Construction Brief: Civil Action No. 1:14-cv-03618; Judge John Z. Lee; Filed July 8.2016.,	
		Medline Industries Inc. vs C.R Bard, Inc.; Declaration of Barbara Weintraub Regarding Claim Construction; Civil Action No. 1:14-cv-03618; Judge John Z. Lee. Filed July 8,2016.,	
		Medline Industries Inc. vs C.R Bard, inc.; Exhibit D to Declaration of Dylan J. Raife in Support of Bard Opening Claim Construction Brief. Civil Action No. 1:16-cv-03529; Judge Sharon Johnson Coleman; Filed November 11,2016.,	
		Medline Industries Inc. vs C.R Bard. Inc.; Exhibit 1 to Declaration of Richard Meyst Regarding Claim Construction; Civil Action No. 1:14-cv-036I8; Judge John Z. Lee; Filed July 8.2016.,	
		Medline Industries Inc. vs C.R. Bard, Inc, Exhibit 4 to C.R. Bard's LPR 2 3 Contentions; Civil Action No. 1:17-cv-7216; Judge Sara L. Ellis; Filed January 16.2018.,	
		Medline IndustriesflInc. vs C.R. Bard, Inc., Declaration of Peter Sauer in Support of Medline's Motion to Supplement Record; Civil Action No. 1:14-cv-03618; Judge John Z. Lee; Filed March 23,20I7,	
		Medline Industries Inc. vs C.R. Bard, Inc.; Exhibit D lo Declaration of Kevin A. Lake; Civil Action No. 1:14-cv-03618. Judge John Z. Lee; Filed July 8,2016.,	

ALL REFERENCES CONSIDERED EXCEPT WHERE LINED THROUGH. /AMM/

Doc code: IDS
Doc description: Information Disclosure Statement (IDS) Field

PTO/SB/08a (01-10)
Approved for use through 07/31/2012. OMB 0651-0031
U.S. Patent and Trademark Office; U.S. DEPARTMENT OF COMMERCE
Under the Paperwork Reduction Act of 1995, no persons are required to respond to a collection of information unless it contains a valid OMB control number.

INFORMATION DISCLOSURE STATEMENT BY APPLICANT (Not for submission under 37 CFR 1.99)		
	Application Number	16/944,667
	Filing Date	July 31, 2020
	First Named Inventor	Jennifer E. Tomes
	Art Unit	
	Examiner Name	
	Attorney Docket Number	10055U CIP2 D1 C1C1C1C1C1

		Medline Industries Inc. vs C.R. Bard. Inc., Exhibit 1 to Declaration of Brian Eutermoser in Support of Medline Surreply; Civil Action No. 1:14-cv-03618; Judge John 2. Lee; Filed September 7,2016.,	
		Medline Industries Inc. vs C R. Bard, Inc.; Exhibit B to Declaration of Nicole M. Smith; Civil Action No. 1:14~cv43618; Judge John 2. Lee; Filed June 4, 2016.,	
		Medline Industries Inc. vs C R. Bard, inc.; Exhibit D to Declaration of Nicole M Smith; Civil Action No. 1:14-cv-03618; Judge John 2. Lee; Filed June 4, 2016.,	
		Medline Industries Inc. vs C R. Bard, Inc.; Exhibit E to Declaration oi Nicole M. Smith; Civil Action No, 1:14-cv-03618: Judge John 2. Lee; Filed June 4, 2016.,	
		Medline Industries Inc. vs C R. Bard, Inc.; Exhibit F to Declaration of Nicole M. Smith; Civil Action No. 1:14-cv-03618; Judge John 2. Lee; Filed June 4, 2016.,	
		Medline Industries Inc. vs C R. Bard, Inc; C R. Bard's Opening Claim Construction Bnel; Civil Action No. 1:14-cv-03618; Judge John 2. Lee; Filed June 4, 2016.,	
		Medline Industries Inc. vs C R. Bard, inc; C.R Bard's Motion for Leave to Add Counterclaims; Civil Action No. 1:17-cv-7216; Judge Sara L. Ellis; Filed February 27,2018,	
		Medline Industries Inc. vs C R. Bard, Inc; Declaration of Dylan Raife in Support of Motion for Leave to Add CounterClaims; Civil Action No. 1:17-cv-7216; Judge Sara L. Eliis; Filed February 27,2018.,	

ALL REFERENCES CONSIDERED EXCEPT WHERE LINED THROUGH. /AMM/

Doc code: IDS
Doc description: Information Disclosure Statement (IDS) Field

PTO/SB/08a (01-10)
Approved for use through 07/31/2012. OMB 0651-0031
U.S. Patent and Trademark Office; U.S. DEPARTMENT OF COMMERCE
Under the Paperwork Reduction Act of 1995, no persons are required to respond to a collection of information unless it contains a valid OMB control number.

INFORMATION DISCLOSURE STATEMENT BY APPLICANT (Not for submission under 37 CFR 1.99)		
	Application Number	16/944,667
	Filing Date	July 31, 2020
	First Named Inventor	Jennifer E. Tomes
	Art Unit	
	Examiner Name	
	Attorney Docket Number	10055U CIP2 D1 C1C1C1C1C1

		Medline Industries Inc. vs C R. Bard, Inc; Exhibit C to Declaration of Dylan Raife in Support of Motion for Leave to Add Counterclaims; Civil Action No. 1.17-cv-7216; Judge Sara L. Ellis; Filed February 27,2018.,	
		Medline industries Inc. vs C R. Bard. Inc; Exhibit 1 to C R. Bard's LPR 2.3 Contentions, Civil Action No 1:17-cv-7216, Judge Sara L. Ellis. Filed January 16,2018.,	
		Medline Industries Inc. vs C.R Bard, Inc., Exhibit A to Declaration of Richard Meyst re Claim Construction: Civil Action No. 1:16-cv-03529: Judge Sharon Johnson Coleman; Filed December 9.2016.,	
		Medline Industries Inc. vs C.R Bard, Inc.; Exhibit B lo Declaration of Nicole Smith in Support of Bard Reply to Medline Claim Construction Brief; Civil Action No. 1.16-cv-03529; Judge Sharon Johnson Coleman; Filed January 27.2017,	
		Medline Industries Inc. vs C.R. Bard, Inc.; C R. Bard's Final LPR 2.3 Contentions; Civil Action No 1:17-cv-7216; Judge Sara L. Ellis; Filed July 24, 2018.,	
		Medline Industries Inc. vs C.R. Bard, Inc.; Exhibit A – C. R. Bard's Final LPR 2.3 Contentions; Civil Action No 1:17-cv-7216; Judge Sara L. Ellis; Filed July 24, 2018.,	
		Medline Industries Inc. vs C.R. Bard, Inc.; Exhibit B – C. R. Bard's Final LPR 2.3 Contentions; Civil Action No 1:17-cv-7216; Judge Sara L. Ellis; Filed July 24, 2018.,	
		Medline Industries Inc. vs C.R. Bard, Inc.; Exhibit C– C. R. Bard's Final LPR 2.3 Contentions; Civil Action No 1:17-cv-7216; Judge Sara L. Ellis; Filed July 24, 2018.,	

ALL REFERENCES CONSIDERED EXCEPT WHERE LINED THROUGH. /AMM/

Doc code: IDS
Doc description: Information Disclosure Statement (IDS) Field

PTO/SB/08a (01-10)
Approved for use through 07/31/2012. OMB 0651-0031
U.S. Patent and Trademark Office; U.S. DEPARTMENT OF COMMERCE
Under the Paperwork Reduction Act of 1995, no persons are required to respond to a collection of information unless it contains a valid OMB control number.

INFORMATION DISCLOSURE STATEMENT BY APPLICANT (Not for submission under 37 CFR 1.99)		
	Application Number	16/944,667
	Filing Date	July 31, 2020
	First Named Inventor	Jennifer E. Tomes
	Art Unit	
	Examiner Name	
	Attorney Docket Number	10055U CIP2 D1 C1C1C1C1C1

		Medline Industries Inc. vs C.R. Bard, Inc.; Exhibit C to Declaration of Nicole M. Smith; Civil Action No. 1:14-cv-03618; Judge John 2. Lee; Filed June 4. 2016.,	
		Medline Industries Inc. vs C.R. Bard, Inc.; Exhibit D– C. R. Bard's Final LPR 2.3 Contentions; Civil Action No 1:17-cv-7216; Judge Sara L. Ellis; Filed July 24, 2018.,	
		Medline Industries Inc. vs C.R. Bard, Inc.; Exhibit E– C. R. Bard's Final LPR 2.3 Contentions; Civil Action No 1:17-cv-7216; Judge Sara L. Ellis; Filed July 24, 2018.,	
		Medline Industries Inc. vs C.R. Bard, Inc.; Exhibit F – C. R. Bard's Final LPR 2.3 Contentions; Civil Action No 1:17-cv-7216; Judge Sara L. Ellis; Filed July 24, 2018.,	
		Medline Industries Inc. vs C.R. Bard, Inc.; Exhibit G – C. R. Bard's Final LPR 2.3 Contentions; Civil Action No 1:17-cv-7216; Judge Sara L. Ellis; Filed July 24, 2018.,	
		Medline Industries Inc. vs C.R. Bard, Inc.; Exhibit H – C. R. Bard's Final LPR 2.3 Contentions; Civil Action No 1:17-cv-7216; Judge Sara L. Ellis; Filed July 24, 2018.,	
		Medline Industries Inc. vs C.R. Bard, Inc.; Exhibit I – C. R. Bard's Final LPR 2.3 Contentions; Civil Action No 1:17-cv-7216; Judge Sara L. Ellis; Filed July 24, 2018.,	
		Medline Industries Inc. vs C.R. Bard, Inc.; Exhibit J – C. R. Bard's Final LPR 2.3 Contentions; Civil Action No 1:17-cv-7216; Judge Sara L. Ellis; Filed July 24, 2018.,	

ALL REFERENCES CONSIDERED EXCEPT WHERE LINED THROUGH. /AMM/

Doc code: IDS
Doc description: Information Disclosure Statement (IDS) Field

PTO/SB/08a (01-10)
Approved for use through 07/31/2012. OMB 0651-0031
U.S. Patent and Trademark Office; U.S. DEPARTMENT OF COMMERCE
Under the Paperwork Reduction Act of 1995, no persons are required to respond to a collection of information unless it contains a valid OMB control number.

INFORMATION DISCLOSURE STATEMENT BY APPLICANT (Not for submission under 37 CFR 1.99)		
	Application Number	16/944,667
	Filing Date	July 31, 2020
	First Named Inventor	Jennifer E. Tomes
	Art Unit	
	Examiner Name	
	Attorney Docket Number	10055U CIP2 D1 C1C1C1C1C1

		Medline Industries Inc. vs C.R. Bard, Inc.; Exhibit K – C. R. Bard's Final LPR 2.3 Contentions; Civil Action No 1:17-cv-7216; Judge Sara L. Ellis; Filed July 24, 2018.,	
		Medline Industries Inc. vs C.R. Bard, Inc.; Exhibit L – C. R. Bard's Final LPR 2.3 Contentions; Civil Action No 1:17-cv-7216; Judge Sara L. Ellis; Filed July 24, 2018.,	
		Medline Industries Inc. vs C.R. Bard, Inc.; Exhibit M – C. R. Bard's Final LPR 2.3 Contentions; Civil Action No 1:17-cv-7216; Judge Sara L. Ellis; Filed July 24, 2018.,	
		Medline Industries Inc. vs C.R. Bard, Inc.; Exhibit N – C. R. Bard's Final LPR 2.3 Contentions; Civil Action No 1:17-cv-7216; Judge Sara L. Ellis; Filed July 24, 2018.,	
		Medline Industries Inc. vs C.R. Bard, Inc.; Exhibit O – C. R. Bard's Final LPR 2.3 Contentions; Civil Action No 1:17-cv-7216; Judge Sara L. Ellis; Filed July 24, 2018.,	
		Medline Industries Inc. vs C.R. Bard, Inc.; Exhibit P – C. R. Bard's Final LPR 2.3 Contentions; Civil Action No 1:17-cv-7216; Judge Sara L. Ellis; Filed July 24, 2018.,	
		Medline Industries Inc. vs C.R. Bard, Inc.; Exhibit Q – C. R. Bard's Final LPR 2.3 Contentions; Civil Action No 1:17-cv-7216; Judge Sara L. Ellis; Filed July 24, 2018.,	
		Medline Industries Inc. vs C.R. Bard, Inc.; Exhibit R – C. R. Bard's Final LPR 2.3 Contentions; Civil Action No 1:17-cv-7216; Judge Sara L. Ellis; Filed July 24, 2018.,	

ALL REFERENCES CONSIDERED EXCEPT WHERE LINED THROUGH. /AMM/

Doc code: IDS
Doc description: Information Disclosure Statement (IDS) Field

PTO/SB/08a (01-10)
Approved for use through 07/31/2012. OMB 0651-0031
U.S. Patent and Trademark Office; U.S. DEPARTMENT OF COMMERCE
Under the Paperwork Reduction Act of 1995, no persons are required to respond to a collection of information unless it contains a valid OMB control number.

INFORMATION DISCLOSURE STATEMENT BY APPLICANT (Not for submission under 37 CFR 1.99)		
	Application Number	16/944,667
	Filing Date	July 31, 2020
	First Named Inventor	Jennifer E. Tomes
	Art Unit	
	Examiner Name	
	Attorney Docket Number	10055U CIP2 D1 C1C1C1C1C1

		Medline Industries Inc. vs C.R. Bard, Inc.; Exhibit S – C. R. Bard's Final LPR 2.3 Contentions; Civil Action No 1:17-cv-7216; Judge Sara L. Ellis; Filed July 24, 2018.,	
		Medline Industries Inc. vs C.R. Bard, Inc.; Exhibit T – C. R. Bard's Final LPR 2.3 Contentions; Civil Action No 1:17-cv-7216; Judge Sara L. Ellis; Filed July 24, 2018.,	
		Medline Industries Inc. vs C.R. Bard, Inc; C.R. Bard's LPR 3.1 Contentions; Civil Action No. 1:16-cs-3529; Judge Sharon Johnson Coleman; Filed August 26, 2016,	
		Medline Industries Inc. vs C.R. Bard, Inc; Exhibit B to C R. Bard's LPR 2.3 Contentions; Civil Action No 1:17-cv-7216; Judge Sara L. Ellis; Filed January 16.2018.,	
		Medline Industries vs. CR Bard, Inc; No 14-cv-3618; C.R. Bard's LPR 3.1 Contentions; Filed November 24, 2015,	
		Medline Industries, Inc. vs C.R. Bard, Inc; No. 1:14-cv-03618; Defendant C.R. Bards, Inc's Second Amended Answer to Second Amended Complaint; Filed September 25, 2015,	
		Medline Industries, Inc. vs C.R. Bard, Inc; No. 1:14-cv-03618; Medline Industries Inc's Opposition to C.R.Bard Inc's Motion For Leave to File Second Amended Answer to Add Counterclaim; Filed October 20, 2015,	
		Medline Industries, Inc. vs C.R. Bard, Inc; No. 1:14-cv-03618; Medline Industries, Inc.'s Response to C.R. Bard's Initial Invalidity Contentions; Exhibits A-H; Dated September 19, 2014,	

ALL REFERENCES CONSIDERED EXCEPT WHERE LINED THROUGH. /AMM/

Doc code: IDS
Doc description: Information Disclosure Statement (IDS) Field

PTO/SB/08a (01-10)
Approved for use through 07/31/2012. OMB 0651-0031
U.S. Patent and Trademark Office; U.S. DEPARTMENT OF COMMERCE
Under the Paperwork Reduction Act of 1995, no persons are required to respond to a collection of information unless it contains a valid OMB control number.

INFORMATION DISCLOSURE STATEMENT BY APPLICANT (Not for submission under 37 CFR 1.99)		
	Application Number	16/944,667
	Filing Date	July 31, 2020
	First Named Inventor	Jennifer E. Tomes
	Art Unit	
	Examiner Name	
	Attorney Docket Number	10055U CIP2 D1 C1C1C1C1C1

		Medline Industries, Inc. vs C.R. Bard, Inc; No. 1:14-cv-03618; Notice of Medline Industries Inc's Motion to Dismiss C.R. Bard Inc's Inequitable Conduct Counterclaim and to strike affirmative defense for the '786 Patent; Filed October 20, 2015,	
		Medline Industries, Inc. vs C.R. Bard, Inc; No. 1:14-cv-03618; Response to Medline Industries, Inc.'s First Set of Interrogatories; Dated September 26, 2014,	
		Medline Industries, Inc. vs C.R. Bard, Inc; No. 1:14-cv-3618; Responses to Medline Industries, Inc.'s First set of Requests for the Production of Documents; Dated September 26, 2014,	
		Medline Industries, Inc. vs C.R. Bard, Inc; No. 1:17-cv-03618; Medline's Supplemental Responses to Bard's Interrogatory No. 1-24 (redacted), dated April 20, 2016; Filed as IPR Petition Exhibit 2013 in IPR2019-00035 and IPR2019-00036,	
		Medline Industries, Inc. vs. C.R. Bard, Inc.; No. 1:17-cv-3539; Medline's Second Supplemental Responses to Bard's Interrogatory No. 11, 14, and 15 (redacted), dated October 26, 2017; Filed as IPR Petition Exhibit 2014 in IPR2019-00035 and IPR2019-00036,	
		Medline Industries, Inc. vs. C.R. Bard, Inc.; No. 1:17-cv-7216; Medline's Objection and Response to Bard's First Set of Interrogatories (redacted), dated October 1, 2018; Filed as IPR Petition Exhibit 2012 in IPR2019-00035 and IPR2019-00036,	
		Medline Industries, Inc. vs. C.R. Bard, Inc.; No. 14-cv-3618; C.R. Bard's LPR 2.3 Contentions - Initial Non-Infringement; Exhibits 1 and A-H; Dated September 5, 2014,	
		Medline Industries, Inc. vs. C.R. Bard, Inc.; No. 14-cv-3618; Memorandum in Support of C.R. Bard's Motion for Leave to File Second Amended Answer to Add Counterclaim; Filed September 25, 2015,	

ALL REFERENCES CONSIDERED EXCEPT WHERE LINED THROUGH. /AMM/

Doc code: IDS
Doc description: Information Disclosure Statement (IDS) Field

PTO/SB/08a (01-10)
Approved for use through 07/31/2012. OMB 0651-0031
U.S. Patent and Trademark Office; U.S. DEPARTMENT OF COMMERCE
Under the Paperwork Reduction Act of 1995, no persons are required to respond to a collection of information unless it contains a valid OMB control number.

INFORMATION DISCLOSURE STATEMENT BY APPLICANT (Not for submission under 37 CFR 1.99)		
	Application Number	16/944,667
	Filing Date	July 31, 2020
	First Named Inventor	Jennifer E. Tomes
	Art Unit	
	Examiner Name	
	Attorney Docket Number	10055U CIP2 D1 C1C1C1C1C1

		Medline Industries, Inc. vs. C.R. Bard, Inc.: Transcript of Proceedings - Claim Construction Hearing: Civil Action No. 1:14-cv-3618. Judge John Z. Lee; Dated January 11, 2017.	
		Naming Characters on Cards website. URL:<https://web.archive.org/web/20060219171403/http://www.hubbardscupboard.org/brown_bear_brown_bear.html>. (2006)…Retrieved form Internet 11 Dec. 2013.	
		Notice of Allowance; EP Application No. 10251025.2-1501; Reference P112645EP00; Attorney Docket No. BPMDL0005JT EP (10055U EP); Mailed February 18, 2016,	
		Inter Partes Review - Patent Owner's Prelim. Response; Patent 9,808,596; Inter Partes Review No. IPR2019-00223; Filed March 7, 2019,	
		Medline Industries Inc. vs. C.R Bard, Inc. Bard Opening Claim Construction Brief; Civil Action No 1:16-cv-03529; Judge Sharon Johnson Coleman; Filed November 17, 2017.	
		Webster's Dictionary Definition of "Intend"; Webster's Third New International Dictionary of the English Language unabridged (1961); filed as IPR Petition Exhibit 2016 in IPR 2019-00035,	
		"Appeal Decision", USSN 12/785,064; Filed May 21, 2010; Attorney Docket No. BPMDL0018RL (10212U); Mailed May 18, 2016,	
		"Article 94(3) EPC Examination", European Application No. 10 251 025.2-1501; Reference P112645EP00; Attorney Docket No. BPMDL0005JT.EPO (10055U EP); Mailed March 13, 2015,	

ALL REFERENCES CONSIDERED EXCEPT WHERE LINED THROUGH. /AMM/

Doc code: IDS
Doc description: Information Disclosure Statement (IDS) Field

PTO/SB/08a (01-10)
Approved for use through 07/31/2012. OMB 0651-0031
U.S. Patent and Trademark Office; U.S. DEPARTMENT OF COMMERCE
Under the Paperwork Reduction Act of 1995, no persons are required to respond to a collection of information unless it contains a valid OMB control number.

INFORMATION DISCLOSURE STATEMENT BY APPLICANT (Not for submission under 37 CFR 1.99)		
	Application Number	16/944,667
	Filing Date	July 31, 2020
	First Named Inventor	Jennifer E. Tomes
	Art Unit	
	Examiner Name	
	Attorney Docket Number	10055U CIP2 D1 C1C1C1C1C1

		"Australian First Exam Report", AU Patent Application No. 2011351971; Patent Examination Report No. 1; Mailed 25JL2015,	
		"Bard IPR Exhibit", "Inter Partes Review Petition", IPR Exhibit - Carrow Declaration for US Patent No. 8,631,935; Susan Carrow Declaration; Mailed December 30, 2014,	
		"Bard Medical Division Care & Catheterization Script", Care & Catheterization/Preventing UTI Script for education video; Preventing UTI: Care and Catheterization Techniques; Copyright 2006; AV0512-06 R12/05 XXX,	
		"Bard Publication", "A few important words about Catheter Care"; C.R. Bard, Inc.; Copyright 2001 C.R. Bard, Inc.,	
		"Bardex I.C. Complete Care StateLock Device 350 ml Urine Meter Foley Tray with Bacteriostatic Collection System", Bard Infection Control System; Bardex I.C. Complete Care Directions for Use; Copyright Dated September 2006,	
		"Bardex I.C. Infection Control 350ml Urine Meter Foley Tray", Bard Infection Control System; Bardex I.C. Urine Meter Foley Tray Directions for Use; Copyright Dated 2006,	
		"Bardex I.C. Infection Control Foley Tray", Bard Infection Control System; Bardex I.C. Directions for Use Infection Control Foley Tray; Copyright Dated 2006,	
		"Decision Instituting Inter Partes Review", IPR2019-00035; Patent No. 9,745,088; Mailed April 10, 2019,	

ALL REFERENCES CONSIDERED EXCEPT WHERE LINED THROUGH. /AMM/

Receipt date: 08/04/2020

Doc code: IDS
Doc description: Information Disclosure Statement (IDS) Field

PTO/SB/08a (01-10)
Approved for use through 07/31/2012. OMB 0651-0031
U.S. Patent and Trademark Office; U.S. DEPARTMENT OF COMMERCE
Under the Paperwork Reduction Act of 1995, no persons are required to respond to a collection of information unless it contains a valid OMB control number.

INFORMATION DISCLOSURE STATEMENT BY APPLICANT (Not for submission under 37 CFR 1.99)		
	Application Number	16/944,667
	Filing Date	July 31, 2020
	First Named Inventor	Jennifer E. Tomes
	Art Unit	
	Examiner Name	
	Attorney Docket Number	10055U CIP2 D1 C1C1C1C1C1

		"Decision Instituting Inter Partes Review", IPR2019-00036; Patent No. 9,745,088; Mailed April 10, 2019,	
		"Decision Instituting IPR", IPR 2019-00208; Patent No. 9,808,400; Dated June 6, 2019,	
		"Decision Instituting Review", IPR 2019-00223; Patent No. 9,808,596; Dated June 6, 2019,	
no publication date, reference not considered8		~~"DVD", Entitled "Preventing UTI: Care and Catheterization Techniques"; Publication Date unknown but believed to be prior to 2007,~~	
		"EPO Intent to Grant", EPO Application No. 10251024.5; Filed June 2, 2010; Attorney Docket No. P112645EP01 (BPMDL0005JT.P1.EPO); Mailed November 2, 2012,	
		"Examiner's Answer", USSN 13/153,265; Filed June 3, 2011; Attorney Docket No. BPMDL0005JT.P5 (10055U CIP5); Mailed December 17, 2013,	
		"Expert Report of Barbara Weintraub", Civil Action No. 1:14-cv-03618; Confidential Information Redacted Pursuant to Court Order; Dated June 14, 2019,	
		"Expert Report of Barbara Weintraub", Civil Action No. 1:16-cv-03529; Confidential Information Redacted Pursuant to Court Order; Dated August 1, 2019,	

ALL REFERENCES CONSIDERED EXCEPT WHERE LINED THROUGH. /AMM/

Doc code: IDS
Doc description: Information Disclosure Statement (IDS) Field

PTO/SB/08a (01-10)
Approved for use through 07/31/2012. OMB 0651-0031
U.S. Patent and Trademark Office; U.S. DEPARTMENT OF COMMERCE
Under the Paperwork Reduction Act of 1995, no persons are required to respond to a collection of information unless it contains a valid OMB control number.

INFORMATION DISCLOSURE STATEMENT BY APPLICANT (Not for submission under 37 CFR 1.99)		
	Application Number	16/944,667
	Filing Date	July 31, 2020
	First Named Inventor	Jennifer E. Tomes
	Art Unit	
	Examiner Name	
	Attorney Docket Number	10055U CIP2 D1 C1C1C1C1C1

		"Expert Report of Dr. Edward Yun", Civil Action No. 1:14-cv-03618; Confidential Information Redacted Pursuant to Court Order; Dated June 13, 2019,	
		"Expert Report of Dr. Edward Yun", Civil Action No. 16-cv-3529; Confidential Information Redacted Pursuant to Court Order; Dated August 1, 2019,	
		"Expert Report of Dr. Edward Yun Related to Damages, Non-Infringement, and New Evidence of Alleged Secondary Considerations", Civil Action No. 1:14-cv-03618; Confidential Information Redacted Pursuant to Court Order; Dated July 23, 2019,	
		"Expert Report of Dr. John Abraham", Civil Action No. 1:14-cv-03618; Confidential Information Redacted Pursuant to Court Order; Dated June 14, 2019,	
		"Expert Report of Dr. John Abraham", Civil Action No. 1:16-cv-03529; Confidential Information Redacted Pursuant to Court Order; Dated August 1, 2019,	
		"Expert Report of Dr. Steven Brooks", Civil Action No. 14-cv-3618; Confidential Information Redacted Pursuant to Court Order; Dated July 25, 2019,	
		"Expert Report of Karl R Leinsing, MSME, PE Regarding Alleged Evidence of Secondary Considerations", Civil Action No. 1:14-cv-3618; Confidential Information Redacted Pursuant to Court Order; Dated June 14, 2019,	
		"Expert Validity Report of Dr. John Abraham", Civil Action No. 1:14-cv-03618; Confidential Information Redacted Pursuant to Court Order; Dated July 25, 2019,	

ALL REFERENCES CONSIDERED EXCEPT WHERE LINED THROUGH. /AMM/

Doc code: IDS
Doc description: Information Disclosure Statement (IDS) Field

PTO/SB/08a (01-10)
Approved for use through 07/31/2012. OMB 0651-0031
U.S. Patent and Trademark Office; U.S. DEPARTMENT OF COMMERCE
Under the Paperwork Reduction Act of 1995, no persons are required to respond to a collection of information unless it contains a valid OMB control number.

INFORMATION DISCLOSURE STATEMENT BY APPLICANT (Not for submission under 37 CFR 1.99)		
	Application Number	16/944,667
	Filing Date	July 31, 2020
	First Named Inventor	Jennifer E. Tomes
	Art Unit	
	Examiner Name	
	Attorney Docket Number	10055U CIP2 D1 C1C1C1C1C1

		"Extended EPO Exam Report", EPO App No.: 10251025.2; Filed June 2, 2010; Attorney Docket No. BPMDL0005JT.EPO (10055U EP); Mailed December 17, 2013,	
		Medline Industries, Inc. vs. C.R. Bard, Inc.; Exhibit J to Declaration of Nicole M. Smith; Civil Action No. 1:14-cv-03618; Judge John Z. Lee; Filed June 4, 2016.	
		"Instructions", Naming a character website. URL: <https://web.archive.org/web/20080410122058/http://www.wilihow.com/Make-Your-Own-Anime-or-Mange-Character>. 2008. Retrieved from Internet 10 Dec. 2013.	
		"Intent to Grant", Chinese Application No. 201180066491.4; Filed December 30, 2011; Attorney Docket No. BPMDL005JT.P4.CHIN (10055U CIP4 CN); Mailed July 6, 2016,	
		"Intent to Grant", European Application No. 16177903.8-1501; Reference No. SJG/P112645EP02; Mailed September 18, 2017,	
		"Inter Partes Review - Patent Owner Response", Inter Partes Review - Patent Owner Response; Patent 8,631,935; Inter Partes Review No. IPR2015-00513; Filed April 21, 2015,	
		"Inter Partes Review - Patent Owner Response", Inter Partes Review - Patent Owner Response; Patent No. 8,448,786; IPR2015-00509; Filed April 22, 2015,	
		"Inter Partes Review - Patent Owner Response", Inter Partes Review - Patent Owner Response; Patent No. 8,631,935; Inter Partes Review No. IPR2015-00511; Filed April 22, 2015,	

ALL REFERENCES CONSIDERED EXCEPT WHERE LINED THROUGH. /AMM/

Doc code: IDS
Doc description: Information Disclosure Statement (IDS) Field

PTO/SB/08a (01-10)
Approved for use through 07/31/2012. OMB 0651-0031
U.S. Patent and Trademark Office; U.S. DEPARTMENT OF COMMERCE
Under the Paperwork Reduction Act of 1995, no persons are required to respond to a collection of information unless it contains a valid OMB control number.

INFORMATION DISCLOSURE STATEMENT BY APPLICANT (Not for submission under 37 CFR 1.99)		
	Application Number	16/944,667
	Filing Date	July 31, 2020
	First Named Inventor	Jennifer E. Tomes
	Art Unit	
	Examiner Name	
	Attorney Docket Number	10055U CIP2 D1 C1C1C1C1C1

		"Inter Partes Review - Patent Owner Response", Inter Partes Review - Patent Owner Response; Patent No. 8,678,190; Inter Partes Review No.: IPR2015-00514; Filed April 21, 2015,	
		"Inter Partes Review - Patent Owner's Prelim Response", Patent 9,745,088; Inter Partes Review No. IPR2019-00035; Filed January 11, 2019,	
		"Inter Partes Review - Patent Owner's Prelim Response", Patent 9,745,088; Inter Partes Review No. IPR2019-00036; Filed January 11, 2019,	
		"Inter Partes Review No. IPR2019-00109", Petition for Review; Patent No. 9,795,761; Filed October 24, 2018,	
		"Inter Partes Review Petition", Exhibit - Amendment filed on April 3, 2013 for USSN 12/495,148; Attorney Docket No. BPMDL0005JT (10055U); Application Filed June 30, 2009,	
		"Inter Partes Review Petition", Exhibit - Bard DFU; Bardex Infection Control Foley Tray; Copyright 2006, publication date unknown,	
		"Inter Partes Review Petition", Exhibit - Bardex DFU; Directions for Use/Patient Education Information - Urology; Unknown Publication Date,	
		"Inter Partes Review Petition", Exhibit - Declaration of Susan Carrow for US Patent No. 8,631,935 claims 1-4 and 11-20; Mailed December 30, 2014,	

ALL REFERENCES CONSIDERED EXCEPT WHERE LINED THROUGH. /AMM/

Receipt date: 08/04/2020

Doc code: IDS
Doc description: Information Disclosure Statement (IDS) Field

PTO/SB/08a (01-10)
Approved for use through 07/31/2012. OMB 0651-0031
U.S. Patent and Trademark Office; U.S. DEPARTMENT OF COMMERCE

Under the Paperwork Reduction Act of 1995, no persons are required to respond to a collection of information unless it contains a valid OMB control number.

INFORMATION DISCLOSURE STATEMENT BY APPLICANT (Not for submission under 37 CFR 1.99)		
	Application Number	16/944,667
	Filing Date	July 31, 2020
	First Named Inventor	Jennifer E. Tomes
	Art Unit	
	Examiner Name	
	Attorney Docket Number	10055U CIP2 D1 C1C1C1C1C1

no publication date, reference not considered		~~"Inter Partes Review Petition", Exhibit - Dorland's Definition of Bag; Dorland's Illustrated Medical Dictionary; 31st Edition; Publication Date Unknown,~~	
		"Inter Partes Review Petition", Exhibit - EC Guideline 1998; "A Guideline on the Readability of the Label and Package Leaflet of Medicinal Products for Human Use"; Published September 29, 1998 (29.09.98); Mailed December 30, 2014,	
no publication date, reference not considered		~~"Inter Partes Review Petition", Exhibit - Encyclopedia Dictionary of Medicine, Nursing and Allied Health; Miller Keane, Seventh Edition,~~	
no publication date, reference not considered		~~"Inter Partes Review Petition", Exhibit - FAQs "Catheter-Associated Urinary Tract Infection"; Unknown Publisher; Unknown Publication Date,~~	
no publication date, reference not considered		~~"Inter Partes Review Petition", Exhibit - FDA Article; "Guidance for the Content of Premarket Notifications fro Conventional and Antimicrobial Foley Catheters; http://www.fda.gov/medicaldevices/deviceregulationandguidance/guidancedocuments/ucm080884.htm; Unknown Publication Date,~~	
		"Inter Partes Review Petition", Exhibit - Health Protection Scotland; CAUTI Maintenance Bundel; Version 2, February 2008,	
		"Inter Partes Review Petition", Exhibit - Infection Control Today Article; Medical Center Cuts Catheterizations by 21 Percent with Foley Catheter Management System; Published 2010,	
		"Inter Partes Review Petition", Exhibit - Kimmel Declaration for US Patent No. 8,631,935 claims 1-4 and 11-20; Declaration of Dr. Robert M. Kimmel; Mailed December 30, 2014,	

ALL REFERENCES CONSIDERED EXCEPT WHERE LINED THROUGH. /AMM/

Doc code: IDS
Doc description: Information Disclosure Statement (IDS) Field

PTO/SB/08a (01-10)
Approved for use through 07/31/2012. OMB 0651-0031
U.S. Patent and Trademark Office; U.S. DEPARTMENT OF COMMERCE
Under the Paperwork Reduction Act of 1995, no persons are required to respond to a collection of information unless it contains a valid OMB control number.

INFORMATION DISCLOSURE STATEMENT BY APPLICANT (Not for submission under 37 CFR 1.99)		
	Application Number	16/944,667
	Filing Date	July 31, 2020
	First Named Inventor	Jennifer E. Tomes
	Art Unit	
	Examiner Name	
	Attorney Docket Number	10055U CIP2 D1 C1C1C1C1C1

		"Inter Partes Review Petition", Exhibit - Medical News Today Article; "'Getting to Zero:' Medline's' Erase Cauti Program Helps Hospitals Reduce Catheter Use by 20 Percent; Article Date April 13, 2011,	
		"Inter Partes Review Petition", Exhibit - Medline Initial Infringement Contentions; Medline Industries vs. C.R. Bard; Dated August 22, 2014,	
		"Inter Partes Review Petition", Exhibit - Morning Start Article; "Floyd Medical Center Reduces Catheter-Associated Urinary Tract Infections 83 Percent and Catheter Use by 23 Percent"; Published January 2011,	
no publication date, reference not considered		~~"Inter Partes Review Petition", Exhibit - Mosby's Pocket Guide Excerpt; Mosby's Pocket Guide to Basic Skills and Procedures; Sixth Edition; Perry & Potter; "Urinary Catheter: Indwelling, Straight, Care and Removal"; Unknown Publication Date,~~	
		"Inter Partes Review Petition", Exhibit - Nursing Standard; Article in Learning Zone - Continue Professional Development; "Reducing the risks associated with urinary catheters"; Published March 25, 2009,	
		"Inter Partes Review Petition", Exhibit - RCE Filed November May 31, 2011 for USSN 12/495,148; Attorney Docket No. BPMDL0005JT (10055U); Application Filed June 30, 2009,	
		"Inter Partes Review Petition", Exhibit - Response to Office Action in USSN 12/495,148; Attorney Reference No. BPMDL0005JT (10055U); Application Filed June 30, 2009; Response Filed November 19, 2010,	
no publication date, reference not considered		~~"Inter Partes Review Petition", Exhibit - Soroka Glossary 'Bag'; Illustrated Glossary of Packaging Terminology, second edition; Walter Soroka; publication unknown,~~	

ALL REFERENCES CONSIDERED EXCEPT WHERE LINED THROUGH. /AMM/

Receipt date: 08/04/2020

Doc code: IDS
Doc description: Information Disclosure Statement (IDS) Field

PTO/SB/08a (01-10)
Approved for use through 07/31/2012. OMB 0651-0031
U.S. Patent and Trademark Office; U.S. DEPARTMENT OF COMMERCE

Under the Paperwork Reduction Act of 1995, no persons are required to respond to a collection of information unless it contains a valid OMB control number.

INFORMATION DISCLOSURE STATEMENT BY APPLICANT (Not for submission under 37 CFR 1.99)		
	Application Number	16/944,667
	Filing Date	July 31, 2020
	First Named Inventor	Jennifer E. Tomes
	Art Unit	
	Examiner Name	
	Attorney Docket Number	10055U CIP2 D1 C1C1C1C1C1

no publication date, reference not considered		~~"Inter Partes Review Petition", Exhibit - Soroka Glossary_wrap; Illustrated Glossary of Packaging Terminology, second edition; publication date unknown,~~	
		"Inter Partes Review Petition", Exhibit - The Journal of Healthcare Contracting, October 2012; "Catheter-associated urinary tract infections",	
		"Inter Partes Review Petition", Exhibit - Webster's Dictionary Definition of Dispose; Webster's Third New International Dictionary; Copyright 2003; publication date unknown,	
		"Inter Partes Review Petition", Exhibit; Carrow CV - Susan Carrow CV; Mailed December 30, 2014,	
		"Inter Partes Review Petition", Exhibit; EC Guideline 2009; "Guideline on the Readability of the Labeling and Package Leaflet of Medicinal Products for Human Use"; Revision 1 Published January 12, 2009 (12.1.2009); Mailed December 30, 2014,	
		"Inter Partes Review Petition", Exhibit; Kimmel CV - Dr. Robert M. Kimmel; Mailed December 30, 2014,	
		"Inter Partes Review Petition", IPR Exhibit - Carrow Declaration for US Patent No. 8,631,935 claims 1-4 and 11-20; Susan Carrow Declaration; Mailed December 30, 2014,	
		"Inter Partes Review Petition", IPR Exhibit - Carrow Declaration for US Patent No. 8,768,190; Declaration of Susan Carrow; Mailed December 30, 2014,	

ALL REFERENCES CONSIDERED EXCEPT WHERE LINED THROUGH. /AMM/

Doc code: IDS
Doc description: Information Disclosure Statement (IDS) Field

PTO/SB/08a (01-10)
Approved for use through 07/31/2012. OMB 0651-0031
U.S. Patent and Trademark Office; U.S. DEPARTMENT OF COMMERCE
Under the Paperwork Reduction Act of 1995, no persons are required to respond to a collection of information unless it contains a valid OMB control number.

INFORMATION DISCLOSURE STATEMENT BY APPLICANT (Not for submission under 37 CFR 1.99)		
	Application Number	16/944,667
	Filing Date	July 31, 2020
	First Named Inventor	Jennifer E. Tomes
	Art Unit	
	Examiner Name	
	Attorney Docket Number	10055U CIP2 D1 C1C1C1C1C1

		"Inter Partes Review Petition", IPR Exhibit - Kimmel Declaration 8,448,786 Patent; Dr. Robert M. Kimmel Declaration; Received December 30, 2014,	
		"Inter Partes Review Petition", IPR Exhibit - Kimmel Declaration for US Patent No. 8,631,935 claims 1-4 and 11-20; Declaration of Dr. Robert M. Kimmel; Mailed December 30, 2014,	
		"Inter Partes Review Petition", IPR Exhibit - Kimmel Declaration for US Patent No. 8,631,935 claims 7-8, 10, 21-23, 25, 27-28, and 30-34; Declaration of Dr. Robert M. Kimmel; Mailed December 30, 2014,	
		"Inter Partes Review Petition", IPR Exhibit - Kimmel Declaration for US Patent No. 8,768,190; Declaration of Dr. Robert M. Kimmel; Mailed December 30, 2014,	
		"Inter Partes Review Petition", IPR Exhibit - Susan Carrow Declaration 8,448,786 patent; mailed December 30, 2014,	
		"Inter Partes Review Petition for 8,448,786", US Patent No. 8,448,786; Filed December 30, 2014; Mailed December 30, 2014,	
		"Inter Partes Review Petition for 8,631,935", Inter Partes Review Petition for 8,631,935 for claims 1-4 and 11-20; Filed December 30, 2014,	
		"Inter Partes Review Petition for 8,631,935", Inter Partes Review Petition for 8,631,935 for Claims 7-8, 10, 21-23, 25, 27-28, and 30-34; Filed December 30, 2014,	

ALL REFERENCES CONSIDERED EXCEPT WHERE LINED THROUGH. /AMM/

Doc code: IDS
Doc description: Information Disclosure Statement (IDS) Field

PTO/SB/08a (01-10)
Approved for use through 07/31/2012. OMB 0651-0031
U.S. Patent and Trademark Office; U.S. DEPARTMENT OF COMMERCE
Under the Paperwork Reduction Act of 1995, no persons are required to respond to a collection of information unless it contains a valid OMB control number.

INFORMATION DISCLOSURE STATEMENT BY APPLICANT (Not for submission under 37 CFR 1.99)		
	Application Number	16/944,667
	Filing Date	July 31, 2020
	First Named Inventor	Jennifer E. Tomes
	Art Unit	
	Examiner Name	
	Attorney Docket Number	10055U CIP2 D1 C1C1C1C1C1

		"Inter Partes Review Petition for 8,678,190", Inter Partes Review Petition for 8,678,190; Filed December 30, 2014,	
		"Inter Partes Review Petition for US Patent No. 9,745,088", IPR-0036; Filed October 4, 2018,	
		"Inter Partes Review Petition for US Patent No. 9,745,088", IPR2019-0035, filed October 4, 2018,	
		"IPR 2015-00514 - Patent Owner's Objection to Evidence", IPR 2015-00514 - Patent Owner's Objection to Evidence Submitted During a Preliminary Proceeding; Patent No. 8,678,190; Mailed July 13, 2015,	
		"IPR 2015-00514 - Patent Owner's Request for Adverse Judgment", Patent No. 8,678,190; Mailed July 23, 2015,	
		"IPR 2015-00514 - Request for Rehearing Denied", IPR2015-00514; Patent No. 8,678,190; Decision on Request for Rehearing - Denied; Mailed July 16, 2015,	
		"IPR 2015-00514 Petitioner's Request for Rehearing", IPR 2015-00514 Petitioner's Request for Rehearing; Patent 8678,190; Dated July 10, 2015,	
		"IPR 2019-00109", Exhibit 1031 - Declaration of Jennifer Tomes filed in USSN 12/647,515 dated December 7, 2012,	

ALL REFERENCES CONSIDERED EXCEPT WHERE LINED THROUGH. /AMM/

Doc code: IDS
Doc description: Information Disclosure Statement (IDS) Field

PTO/SB/08a (01-10)
Approved for use through 07/31/2012. OMB 0651-0031
U.S. Patent and Trademark Office; U.S. DEPARTMENT OF COMMERCE
Under the Paperwork Reduction Act of 1995, no persons are required to respond to a collection of information unless it contains a valid OMB control number.

INFORMATION DISCLOSURE STATEMENT BY APPLICANT (Not for submission under 37 CFR 1.99)		
	Application Number	16/944,667
	Filing Date	July 31, 2020
	First Named Inventor	Jennifer E. Tomes
	Art Unit	
	Examiner Name	
	Attorney Docket Number	10055U CIP2 D1 C1C1C1C1C1

		"IPR 2019-00109", Patent No. 9,795,761; Filed October 24, 2018; Declaration of Dr. Edward Yun,	
		"IPR Decision Instituting Inter Partes Review", IPR2019-00109; Patent 9,795,761; Mailed May 6 2019,	
		"IPR Exhibit 1002", Declaration of Pliska; IPR2019-0035, Filed October 4, 2018,	
		"IPR Exhibit 1003", Declaration of Yun; IPR2019-0035; Filed October 4, 2018,	
		"IPR Exhibit 1022", Email from Medline counsel re claims constructions; IPR2019-0035; Filed October 4, 2018,	
		"IPR Petition Exhibit 1016", Excerpt from "The Design of Everyday Things"; IPR2019-0035; Filed October 4, 2018,	
		"IPR Petition Exhibit 1024", Email from Bard counsel re claims constructions; IPR2019-0035; Filed October 4, 2018,	
		"IPR0215-00513 Scheduling Order", Patent No. 8,631,935; Mailed July 15, 2015,	

ALL REFERENCES CONSIDERED EXCEPT WHERE LINED THROUGH. /AMM/

Doc code: IDS
Doc description: Information Disclosure Statement (IDS) Field

PTO/SB/08a (01-10)
Approved for use through 07/31/2012. OMB 0651-0031
U.S. Patent and Trademark Office; U.S. DEPARTMENT OF COMMERCE
Under the Paperwork Reduction Act of 1995, no persons are required to respond to a collection of information unless it contains a valid OMB control number.

INFORMATION DISCLOSURE STATEMENT BY APPLICANT (Not for submission under 37 CFR 1.99)		
	Application Number	16/944,667
	Filing Date	July 31, 2020
	First Named Inventor	Jennifer E. Tomes
	Art Unit	
	Examiner Name	
	Attorney Docket Number	10055U CIP2 D1 C1C1C1C1C1

		"IPR2015-00509 Institution Decision", IPR2015-00509; Patent Number 8,448,786; Mailed July 15, 2015; Decision Denying Institution of Inter Partes Review,	
		"IPR2015-00511 Institution Decision", IPR2015-00511; Patent 8,631,935; Entered July 15, 2015; Decision Denying Institution of Inter Partes Review,	
		"IPR2015-00513 - Request for Adverse Judgment", IPR2015-00513 - Request for Adverse Judgment; Granted - Proceedings Terminated; Patent No. 8,631,935; Entered August 11, 2015,	
		"IPR2015-00513 - Patent Owner's Request for Adverse Judgment", Patent No. 8,631,935; Mailed July 23, 2015,	
		"IPR2015-00513 Institution Decision", IPR2015-00513 Institution Decision; Patent 8,631,935; Entered July 15, 2015; Decision Institution of Inter Partes Review,	
		"IPR2015-00514 - Scheduling Order", Patent No. 8,678,190; Mailed June 26, 2015,	
		"IPR2015-00514 Decision Institution of Inter Partes Review", IPR2015-00514; Patent 8,678,190; Mailed June 26, 2015; Decision Institution of Inter Partes Review,	
		"IPR2015-00514 Judgment - Termination of Proceeding", Patent No. 8,678,190; Mailed July 24, 2015,	

ALL REFERENCES CONSIDERED EXCEPT WHERE LINED THROUGH. /AMM/

Receipt date: 08/04/2020

Doc code: IDS
Doc description: Information Disclosure Statement (IDS) Field

PTO/SB/08a (01-10)
Approved for use through 07/31/2012. OMB 0651-0031
U.S. Patent and Trademark Office; U.S. DEPARTMENT OF COMMERCE

Under the Paperwork Reduction Act of 1995, no persons are required to respond to a collection of information unless it contains a valid OMB control number.

INFORMATION DISCLOSURE STATEMENT BY APPLICANT (Not for submission under 37 CFR 1.99)		
	Application Number	16/944,667
	Filing Date	July 31, 2020
	First Named Inventor	Jennifer E. Tomes
	Art Unit	
	Examiner Name	
	Attorney Docket Number	10055U CIP2 D1 C1C1C1C1C1

		"IPR2019-00109", Exhibit 1026 - Bard's Opening Claim Construction Brief; Civil Action No. 1:17-cv-07216; Dated October 10, 2018; Filed October 24, 2018 as exhibit 1026,	
		"IPR2019-00109", Exhibit 1030 - Medline Industries, Inc.'s Final Infringement Contentions; Filed July 24, 2018 in Civil Action No. 1:17-cv-07216; Filed as exhibit October 24, 2018,	
		"IPR2019-00109", Patent No. 9,795,761; Filed October 24, 2018; Exhibit 1002 Declaration of Michael Plishka,	
		"Markman Decision", Medline Industries, Inc. vs. C.R. Bard, Inc.; Case No. 1:16-cv-03529\; Memorandum Opinion and Order; Judge Sharon Johnson Coleman Issued December 28, 2018,	
		"Markman Hearing", Medline Industries, Inc. vs. C.R. Bard, Inc.; Case No. 1:17-cv-07216; Memorandum Opinion and Order; Judge Sara L. Ellis; Issued January 28, 2019,	
no publication date, reference not considered		~~"Medline Catalog", Argyle Trocar Catheter Kits by Covidien; http://www.medline.com/sku/item/MDPCW/D565028; Unknown Publication Date but believed to be prior to filing of present application,~~	
		~~"Medline Catalog", Argyle Turkel Safety Thoracentesis System by Covidien; 6"; http://www.medline.com/sku/item/MDPKDL5016; Unknown Publication Date but believed to be prior to filing of present application,~~	
		~~"Medline Catalog", Argyle Turkel Safety Thoracentesis System by Covidien; http://www.medline.com/sku/item/MDPKDL5014; Unknown Publication Date but believe to be prior to filing of present application,~~	

ALL REFERENCES CONSIDERED EXCEPT WHERE LINED THROUGH. /AMM/

Receipt date: 08/04/2020

Doc code: IDS
Doc description: Information Disclosure Statement (IDS) Field

PTO/SB/08a (01-10)
Approved for use through 07/31/2012. OMB 0651-0031
U.S. Patent and Trademark Office; U.S. DEPARTMENT OF COMMERCE

Under the Paperwork Reduction Act of 1995, no persons are required to respond to a collection of information unless it contains a valid OMB control number.

INFORMATION DISCLOSURE STATEMENT BY APPLICANT (Not for submission under 37 CFR 1.99)		
	Application Number	16/944,667
	Filing Date	July 31, 2020
	First Named Inventor	Jennifer E. Tomes
	Art Unit	
	Examiner Name	
	Attorney Docket Number	10055U CIP2 D1 C1C1C1C1C1

no publication date, reference not considered		~~"Medline Catalog", Paracentesis Trays by Covidien; http://www.medline.com/sku/item/MDPSWD568006; Unknown Publication Date but believed to be prior to filing of present application,~~	
		~~"Medline Catalog", Paracentesis Trays by Halyard Health; http://www.medline.com/sku/item/MDPBAA61450; Unknown Publication Date but believed to be prior to filing of present application,~~	
		~~"Medline Catalog", Safe-T Thoracentesis/Paracentesis Tray by Carefusion; http://www.medline.com/sku/item/MDPBXTTPT1000SP; Unknown publication date but believed to be prior to filing of present application,~~	
		~~"Medline Catalog", Thoracentesis Trays by Carefusion; http://www.medline.com/sku/item/MDPBXTPIG1280K; Unknown publication date but believed to be prior to filing of present application,~~	
		~~"Medline Catalog", Turkel Safety Thoracentesis Procedure Trays by Covidien; 5"; http://www.medline.com/sku/item/MDPKDL566075; Unknown Publication date but believed to be prior to present application filing date,~~	
		~~"Medline Catalog", Turkel Safety Thoracentesis Procedure Trays by Covidien; http://www.medline.com/jump/sku/x/MDPKDL566059; Unknown Publication date but believed to be prior to present application filing date,~~	
		"NonFinal Office Action", USSN 13/680,902; Filed April 11, 2014; Attorney Docket No. BPMDL0005JT.P2.D1; Mailed December 2, 2014,	
		"Notice of Acceptance", Australian Application No. 2011351971; Filed December 30, 2011; Attorney Docket No. BPMDL0005JT.P4.AU (10055U CIP4 AU); Mailed May 13, 2016,	

ALL REFERENCES CONSIDERED EXCEPT WHERE LINED THROUGH. /AMM/

Doc code: IDS
Doc description: Information Disclosure Statement (IDS) Field

PTO/SB/08a (01-10)
Approved for use through 07/31/2012. OMB 0651-0031
U.S. Patent and Trademark Office; U.S. DEPARTMENT OF COMMERCE
Under the Paperwork Reduction Act of 1995, no persons are required to respond to a collection of information unless it contains a valid OMB control number.

INFORMATION DISCLOSURE STATEMENT BY APPLICANT (Not for submission under 37 CFR 1.99)		
	Application Number	16/944,667
	Filing Date	July 31, 2020
	First Named Inventor	Jennifer E. Tomes
	Art Unit	
	Examiner Name	
	Attorney Docket Number	10055U CIP2 D1 C1C1C1C1C1

		"Notice of Allowance", Canadian Application No. 2,705,647; Filed May 27, 2010; Attorney Docket No. 10055U CA; Mailed October 12, 2017,	
		"Notice of Allowance", Canadian Application No. 2,705,670; Attorney Docket No. 10055U CIP CA; Mailed November 3, 2017,	
		"Notice of Allowance", Chinese Application No. 201280035240.4; Reference No.10055U CIP6 CN; Mailed November 7, 2017,	
		"Office Action", Australian Application No. 2011351971; Reference No. 35204298/GP; Mailed February 18, 2016,	
		"Office Action", Chinese Application No. 201180066491.4; Mailed March 24, 2015; Attorney Docket No. BPMDL0005JT.P4 CN,	
		"Office Action", Chinese Application No. 201180066491.4; Mailed November 11, 2015; Attorney Docket No. BPMDL0005JT.P4 CN,	
		"Office Action", Chinese Application No. 201180066491.4; Mailed November 11, 2015; Attorney Docket No. BPMDL0005JT.P4.CN,	
		"Office Action", Chinese Application No. 201280035246.1; Filed May 11, 2012; Attorney Docket No. BPMDL0005JT.P5.CHIN (10055U CIP5 CN); Mailed July 15, 2016,	

ALL REFERENCES CONSIDERED EXCEPT WHERE LINED THROUGH. /AMM/

Doc code: IDS
Doc description: Information Disclosure Statement (IDS) Field

PTO/SB/08a (01-10)
Approved for use through 07/31/2012. OMB 0651-0031
U.S. Patent and Trademark Office; U.S. DEPARTMENT OF COMMERCE
Under the Paperwork Reduction Act of 1995, no persons are required to respond to a collection of information unless it contains a valid OMB control number.

INFORMATION DISCLOSURE STATEMENT BY APPLICANT (Not for submission under 37 CFR 1.99)		
	Application Number	16/944,667
	Filing Date	July 31, 2020
	First Named Inventor	Jennifer E. Tomes
	Art Unit	
	Examiner Name	
	Attorney Docket Number	10055U CIP2 D1 C1C1C1C1C1

		"Office Action", Chinese Application No. 201280035246.1; Filed May 11, 2012; Reference No. 10055U CIP5 CN; Mailed November 28, 2016,	
		"Office Action Received", Chinese App no 201280035246.1; NonFinal OA; Attorney Docket No. BPMDL005JT.P5.CN 10055U CIP5 CN; Mailed September 16, 2015,	
		"Opening Expert Report of Karl R Leinsing, MSME, PE", Civil Action No. 1:14-cv-3618; Confidential Information Redacted Pursuant to Court Order; Dated June 14, 2019,	
		"Opening Expert Report of Karl R. Leinsing, MSME, PE", Civil Action No. 1:16-cv-3529; Confidential Information Redacted Pursuant to Court Order; Dated August 1, 2019,	
		"Petition for Inter Partes Review", IPR 2019-00208; Patent No. 9,808,400; Filed November 7, 2018; Attorney Docket No. 10055U D1 C1,	
		"Petition for Inter Partes Review", IPR 2019-00223; Patent No. 9,808,596; Filed November 7, 2018; Attorney Docket No. 10055U CIP C1 C1,	
		"Publication", European Commission: Pharmaceutical Committee "A Guideline on the Readability of the Label and Package Leaflet of Medicinal Products for Human Use"; Dated September 29, 1998,	
		"Rebuttal Expert Report of Barbara Weintraub", Civil Action No. 1:14-cv-03618; Confidential Information Redacted Pursuant to Court Order; Dated July 25, 2019,	

ALL REFERENCES CONSIDERED EXCEPT WHERE LINED THROUGH. /AMM/

Receipt date: 08/04/2020

Doc code: IDS
Doc description: Information Disclosure Statement (IDS) Field

PTO/SB/08a (01-10)
Approved for use through 07/31/2012. OMB 0651-0031
U.S. Patent and Trademark Office; U.S. DEPARTMENT OF COMMERCE

Under the Paperwork Reduction Act of 1995, no persons are required to respond to a collection of information unless it contains a valid OMB control number.

INFORMATION DISCLOSURE STATEMENT BY APPLICANT (Not for submission under 37 CFR 1.99)		
	Application Number	16/944,667
	Filing Date	July 31, 2020
	First Named Inventor	Jennifer E. Tomes
	Art Unit	
	Examiner Name	
	Attorney Docket Number	10055U CIP2 D1 C1C1C1C1C1

		"Rebuttal Expert Report of Richard Hillstead, PH.D.", Civil Action No. 1:14-cv-3618; Confidential Information Redacted Pursuant to Court Order; Dated June 14, 2019,	
		"Second Office Action", Chinese Application No. 201280035240.4; Attorney Docket No. BPMDL0005JT.P6 CN (10055U CIP6 CN); Mailed June 23, 2016,	
		"Third Office Action", Chinese Application No. 201280035240.4; Attorney Docket No. BPMDL0005JT.P6 CN (10055U CIP6 CN); Mailed April 1, 2017,	
no publication date, reference not considered		~~"YouTube Training Video", https://www.youtube.com/watch?v=YwqcRUP35nI&list =UUG7a6tFPh1wvF0QDM Z3DarQ ; Unknown Publication date~~	
no publication date, reference not considered		~~"YouTube Training Video", https://www.youtube.com/watch?v=ISBya_5cIM; Unknown Publication date~~	
		BYUN, SUNG C."PCT Search Report", PCT/US2011/068193; Filed December 30, 2011; Attorney Docket No. BPMDL0005JT.P4PCT; Mailed August 22, 2012,	
		BYUN, SUNG C."PCT Search Report", PCT/US2012/039311; Filed May 24, 2011; Attorney Docket No. BPMDL05JT.P6.PCT; Mailed October 25, 2012,	
		BYUN, SUNG CHEAL, "PCT Search Report and Written Opinion", PCT/US2012/037524; Filed May 11, 2012; Attorney Docket No. BPMDL05JT.P5.PCT; Mailed November 16, 2012,	

ALL REFERENCES CONSIDERED EXCEPT WHERE LINED THROUGH. /AMM/

Doc code: IDS
Doc description: Information Disclosure Statement (IDS) Field

PTO/SB/08a (01-10)
Approved for use through 07/31/2012. OMB 0651-0031
U.S. Patent and Trademark Office; U.S. DEPARTMENT OF COMMERCE
Under the Paperwork Reduction Act of 1995, no persons are required to respond to a collection of information unless it contains a valid OMB control number.

INFORMATION DISCLOSURE STATEMENT BY APPLICANT (Not for submission under 37 CFR 1.99)		
	Application Number	16/944,667
	Filing Date	July 31, 2020
	First Named Inventor	Jennifer E. Tomes
	Art Unit	
	Examiner Name	
	Attorney Docket Number	10055U CIP2 D1 C1C1C1C1C1

		CAVANNA, MARK, "Ex Parte Quayle Action", USSN 29/380,474; Filed December 6, 2010; Attorney Docket No. BPMDL0006JT.C1.D3 (10056D C1 D3); Mailed August 14, 2012,	
		CAVANNA, MARK, "Final OA", USSN 29/479,600; Filed January 17, 2014; Attorney Docket No. BPMDL0006C1D3C2 10056DC1D3C2; Mailed June 1, 2017,	
		CAVANNA, MARK, "NonFinal OA", USSN 29/479,600; Filed January 17, 2014; Attorney Docket No. BPMDL6C1D3C2 10056DC1D3C2; Mailed January 3, 2018,	
		CAVANNA, MARK, "NonFinal Office Action", USSN: 29/380,474; Filed December 26, 2012; Attorney Docket No. BPMDL0006JT.C1.D3 (10056D C1 D3); Mailed March 27, 2012,	
		CAVANNA, MARK, "Non-Final Office Action", USSN 29/479,600; Filed January 17, 2014; Attorney Docket No. BPMDL0006C1D3C2 (10056D C1 D3 C2); Mailed September 26, 2016,	
		CAVANNA, MARK, "Notice of Allowance", USSN 29/338,022; Filed June 3, 2009; Attorney Docket No. BPMDL0006JT (10056D); Mailed October 1, 2009,	
		CAVANNA, MARK, "Notice of Allowance", USSN 29/362,279; Filed May 21, 2010, BPMDL006JT.C1.D1 (10056D C1 D1); Mailed September 19, 2011,	
		CAVANNA, MARK, "Notice of Allowance", USSN 29/444,526; Filed January 31, 2013; Attorney Docket No BPMDL0006JT.C1.D3.C1; Mailed October 17, 2013,	

ALL REFERENCES CONSIDERED EXCEPT WHERE LINED THROUGH. /AMM/

Doc code: IDS
Doc description: Information Disclosure Statement (IDS) Field

PTO/SB/08a (01-10)
Approved for use through 07/31/2012. OMB 0651-0031
U.S. Patent and Trademark Office; U.S. DEPARTMENT OF COMMERCE
Under the Paperwork Reduction Act of 1995, no persons are required to respond to a collection of information unless it contains a valid OMB control number.

INFORMATION DISCLOSURE STATEMENT BY APPLICANT (Not for submission under 37 CFR 1.99)		
	Application Number	16/944,667
	Filing Date	July 31, 2020
	First Named Inventor	Jennifer E. Tomes
	Art Unit	
	Examiner Name	
	Attorney Docket Number	10055U CIP2 D1 C1C1C1C1C1

		EUROPEAN PATENT OFFICE, "Extended EPO Search Report", Application No. 10251024.5, In the Name of Medline Industries, Mailed October 18, 2010,	
		EUROPEAN PATENT OFFICE, "Extended EPO Search Report", EPO Application No. 10251025.2, In the Name of Medline Industries, Mailed September 29, 2010,	
		EXAMINER, CHINESE PATENT OFFICE, "First Office Action", CN Application No. 201020219785.9; Mailed November 18, 2010; Attorney Docket No.10055U CIP.CN; Filed June 3, 2010,	
		GILLIGAN, C. LUKE, "Notice of Allowance", USSN 13/153,265; Filed June 3, 2011; Attorney Docket No. BPMDL0005JT.P5 (10055U CIP5); Mailed June 15, 2017,	
		GIMENEZ BURGOS, R, "European Examination Report", European Application No. 11 854 003.8-1659; Ref SJG/P128064EP00; Attorney Docket No. BPMDL0005JT.P4.EPO (10055U CIP4 EP); Mailed January 22, 2015,	
		GIMENEZ BURGOS, R, "Extended European Search Report", 11854003.8; Filed December 30, 2011; Attorney Docket No. SJG/P128064EP00; Mailed June 3, 2014,	
		GIMENEZ BURGOS, R, "Extended European Search Report", EPO App No. 12 79 3939; Reference No. SJG/P130269EP00; Attorney Docket No. 10055U CIP5 EP; Mailed January 27, 2015,	
		GIMENEZ BURGOS, R, "Extended European Search Report", EU App No. 12792423.1-1659/2713933; PCT/US2012039311; Reference No. SJG/P130270EP00; Attorney Docket No. 10055U CIP6 EP; Mailed January 27, 2015,	

ALL REFERENCES CONSIDERED EXCEPT WHERE LINED THROUGH. /AMM/

Doc code: IDS
Doc description: Information Disclosure Statement (IDS) Field

PTO/SB/08a (01-10)
Approved for use through 07/31/2012. OMB 0651-0031
U.S. Patent and Trademark Office; U.S. DEPARTMENT OF COMMERCE
Under the Paperwork Reduction Act of 1995, no persons are required to respond to a collection of information unless it contains a valid OMB control number.

INFORMATION DISCLOSURE STATEMENT BY APPLICANT (Not for submission under 37 CFR 1.99)		
	Application Number	16/944,667
	Filing Date	July 31, 2020
	First Named Inventor	Jennifer E. Tomes
	Art Unit	
	Examiner Name	
	Attorney Docket Number	10055U CIP2 D1 C1C1C1C1C1

		HAND, MELANIE J., "Final OA", USS 12/785,064; Filed May 21, 2010; Attorney Docket No. BPMDL0018RL (10212U); Mailed June 5, 2013,	
		HAND, MELANIE J., "NonFinal OA", USSN 12/785,064; Filed May 21, 2010; Attorney Docket No. BPMDL0018RL (10212U); Mailed February 1, 2013,	
		HAND, MELANIE J., "NonFinal OA", USSN 13/115,053; Filed June 7, 2011; Attorney Docket No. BPMDL005JT.P3; Mailed May 9, 2013,	
		HAND, MELANIE J., "NonFinal OA", USSN 13/155,026; Filed June 7, 2011; Attorney Docket No. BPMDL0005JT.P2 (10055U CIP2); Mailed November 30, 2012,	
		HAND, MELANIE J., "NonFinal OA", USSN 13/860,902; Filed April 11, 2013; Attorney Docket No. BPMDL0005JT.P2.D1 (10055U CIP2 D1); Mailed April 1, 2016,	
		HAND, MELANIE J., "NonFinal OA", USSN 14/165,044; Filed January 27, 2014; Attorney Docket No. BPMDL0005JTP3C1 (10055UCIP3C1); Mailed October 26, 2015,	
		HAND, MELANIE J., "Notice of Allowance", USSN 13/155,026; Filed June 7, 2011; Attorney Docket No. BPMDL0005JT.P2 (10055U CIP2); Mailed February 1, 2013,	
		HAND, MELANIE J., "Notice of Allowance", USSN 13/155,054; Filed June 7, 2011; Attorney Docket No. BPMDL0005JT.P3 (10055U CIP3); Mailed October 28, 2013,	

ALL REFERENCES CONSIDERED EXCEPT WHERE LINED THROUGH. /AMM/

Doc code: IDS
Doc description: Information Disclosure Statement (IDS) Field

PTO/SB/08a (01-10)
Approved for use through 07/31/2012. OMB 0651-0031
U.S. Patent and Trademark Office; U.S. DEPARTMENT OF COMMERCE
Under the Paperwork Reduction Act of 1995, no persons are required to respond to a collection of information unless it contains a valid OMB control number.

INFORMATION DISCLOSURE STATEMENT BY APPLICANT (Not for submission under 37 CFR 1.99)		
	Application Number	16/944,667
	Filing Date	July 31, 2020
	First Named Inventor	Jennifer E. Tomes
	Art Unit	
	Examiner Name	
	Attorney Docket Number	10055U CIP2 D1 C1C1C1C1C1

		HAND, MELANIE J., "Notice of Allowance", USSN 13/860, 902; Filed April 11, 2013; Attorney Docket No. BPMDL0005JT.P2.D1 (10055U CIP2 D1); Mailed August 4, 2015,	
		HAND, MELANIE JO, "Appeal Decision", USSN 12/785,064; Filed May 21, 2010; Attorney Docket No. BPMDL0018RL (10212U); Mailed May 18, 2016,	
		HAND, MELANIE JO, "Final OA", USSN 13/860,902; Filed April 11, 2013; Attorney Docket No. BPMDL0005JT.P2.D1 (10055U CIP2 D1); Mailed May 22, 2015,	
		KLEIN, BENJAMIN J., "NonFinal OA", USSN 15/5051,964; Filed February 24, 2016; Attorney Docket No. BPMDL0005JT CIP C2 10055U CIP C2; Mailed January 7, 2019,	
		KLEIN, BENJAMIN JACOB, "Notice of Allowance", USSN 15/051,964; Filed February 24, 2016; Attorney Docket No. BPMDL0005JT.P1.C2 (10055U CIP C2); Mailed August 21, 2019,	
		LAWRENCE, SAMANTHA Q., "Notice of Allowance", USSN 29/479,600; Filed January 17, 2014; Attorney Docket No. BPMDL6C1D3C2 10056DC1D3C2; Mailed April 25, 2019,	
		LONG, FONYA M, "Appeal Decision", USSN 13/154,265; Filed June 3, 2011; Attorney Docket No. BPMDL0005JT.P5 (10055U CIP5); Mailed October 6, 2016,	
		MACKENZIE, KRISTIAN, "Office Action", Canadian Application No. 2,705,647; Ref No. 15486-P37235CA00 10055U CA; Mailed February 10, 2017,	

ALL REFERENCES CONSIDERED EXCEPT WHERE LINED THROUGH. /AMM/

Doc code: IDS
Doc description: Information Disclosure Statement (IDS) Field

PTO/SB/08a (01-10)
Approved for use through 07/31/2012. OMB 0651-0031
U.S. Patent and Trademark Office; U.S. DEPARTMENT OF COMMERCE
Under the Paperwork Reduction Act of 1995, no persons are required to respond to a collection of information unless it contains a valid OMB control number.

INFORMATION DISCLOSURE STATEMENT BY APPLICANT (Not for submission under 37 CFR 1.99)		
	Application Number	16/944,667
	Filing Date	July 31, 2020
	First Named Inventor	Jennifer E. Tomes
	Art Unit	
	Examiner Name	
	Attorney Docket Number	10055U CIP2 D1 C1C1C1C1C1

		MACKENZIE, KRISTIAN, "Office Action", Canadian Application No. 2,705,647; Ref Number 15468-P37235CA00; Attorney Docket No. BPMDL0005JT.CAN (10055U CA); Mailed April 21, 2016,	
		MACKENZIE, KRISTIAN, "Office Action", Canadian Application No. 2,705,670; Attorney Ref No. 15468-P37238CA00; 10055U CIP CA; Mailed February 10, 2017,	
		MACKENZIE, KRISTIAN, "Office Action", Canadian Application No. 2,705,670; Ref No. 15468-8; Attorney Docket No. BPMDL0005JT CIP CA (10055U CIP CA); Mailed April 25, 2016,	
		MARCETICH, ADAM, "Non-Final OA", USSN 15/640,224; Filed June 30, 2017; Attorney Docket No. 10055U CIP3 C1 C1; Mailed July 10, 2019,	
		MARCETICH, ADAM, "NonFinal Office Action", USSN 15/684,787; Filed August 23, 2017; Attorney Docket No. 10055U CIP2 D1 C1 C1; Mailed November 4, 2019,	
		MARCETICH, ADAM, "Notice of Allowance", USSN 13/860,902; Filed April 11, 2013; Attorney Docket No. BPMDL0005JT.P2.D1 (10055U CIP2 D1); Mailed November 8, 2016,	
		MARCETICH, ADAM, "Notice of Allowance", USSN 13/860,902; Filed April 11, 2013; Attorney Docket No. BPMDL0005JT.P2.D1 (10055U CIP2 D1); Mailed September 14, 2016,	
		MARCETICH, ADAM, "Notice of Allowance", USSN 14/165,044; Filed January 27, 2014; Attorney Docket No. BPMDL0005JT.P3.C1 (10055U CIP3 C1); Mailed February 28, 2017,	

ALL REFERENCES CONSIDERED EXCEPT WHERE LINED THROUGH. /AMM/

Doc code: IDS
Doc description: Information Disclosure Statement (IDS) Field

PTO/SB/08a (01-10)
Approved for use through 07/31/2012. OMB 0651-0031
U.S. Patent and Trademark Office; U.S. DEPARTMENT OF COMMERCE
Under the Paperwork Reduction Act of 1995, no persons are required to respond to a collection of information unless it contains a valid OMB control number.

INFORMATION DISCLOSURE STATEMENT BY APPLICANT (Not for submission under 37 CFR 1.99)		
	Application Number	16/944,667
	Filing Date	July 31, 2020
	First Named Inventor	Jennifer E. Tomes
	Art Unit	
	Examiner Name	
	Attorney Docket Number	10055U CIP2 D1 C1C1C1C1C1

		MARCETICH, ADAM, "Notice of Allowance", USSN 14/793,455; Filed July 7, 2015; Attorney Docket No. BPMDL 10055UCIP2D1C1; Mailed July 20, 2017,	
		MARCETICH, ADAM M., "Final OA", USSN 14/165,044; Filed January 27, 2014; Attorney Docket No. BPMDL0005JT.CIP3.C1 (10055U CIP3 C1); Mailed August 11, 2016,	
		MARCETICH, ADAM M., "Notice of Allowance", USSN 15/640,224; Filed June 30, 2017; Attorney Docket No. 10055U CIP3 C1 C1; Mailed November 21, 2019,	
		MARCITECH, ADAM, "NonFinal OA", USSN 14/793,455; Filed July 7, 2015; Attorney Docket No. BPMDL10055UCIP2D1C1; Mailed May 3, 2017,	
		MEDLINE, "Medline Article/Brochure", Published 2008.	
		MIAN, ALI, "Non-Final Office Action", Canadian Application No. 2,837,324; Attorney Docket No. 15468-P45287CA00 (10055U CIP6 CA); Mailed October 3, 2018,	
		MIAN, ALI, "Office Action", Canadian Application No. 2,837,324; Reference No. 10055U CIP6 CA; Mailed September 3, 2019,	
		ORTEGA, RAFAEL et al., "Female Urethral Catheterization", N. Engl. J. Med Vol 358:e15; published 2008,	

ALL REFERENCES CONSIDERED EXCEPT WHERE LINED THROUGH. /AMM/

Doc code: IDS
Doc description: Information Disclosure Statement (IDS) Field

PTO/SB/08a (01-10)
Approved for use through 07/31/2012. OMB 0651-0031
U.S. Patent and Trademark Office; U.S. DEPARTMENT OF COMMERCE
Under the Paperwork Reduction Act of 1995, no persons are required to respond to a collection of information unless it contains a valid OMB control number.

INFORMATION DISCLOSURE STATEMENT BY APPLICANT (Not for submission under 37 CFR 1.99)		
	Application Number	16/944,667
	Filing Date	July 31, 2020
	First Named Inventor	Jennifer E. Tomes
	Art Unit	
	Examiner Name	
	Attorney Docket Number	10055U CIP2 D1 C1C1C1C1C1

		PASS, NATALIE, "Final OA", USSN 13/153,265; Filed June 3, 2011; Attorney Docket No. BPMDL0005JT.P5 (10055U CIP5); Mailed July 12, 2013,	
		PASS, NATALIE, "NonFinal OA", USSN 13/153,265; Filed June 3, 2011; Attorney Docket No. BPMDL0005JT.P5 (10055U CIP5); Mailed March 5, 2013,	
		POON, ROBERT, "Appeal Decision", USSN 12/647,515; Filed December 27, 2009; Attorney Docket No. BPMDL0005JT.P1 (10055U CIP); Mailed January 19, 2018,	
		POON, ROBERT, "Appeal Decision", USSN 13/153,300; Filed June 3, 2011; Attorney Docket No. BPMDL0005JT.P6 (10055U CIP6); Mailed October 12, 2016,	
		POON, ROBERT, "Appeal Decision", USSN 13/374,509; Filed December 30, 2011; Attorney Docket No. BPMDL0005JT.P4 (10055U CIP4); Mailed October 24, 2016,	
		POON, ROBERT, "Appeal Decision", USSN 14/265,920; Filed April 30, 2014; Attorney Docket No. BPMDL0005JT.D1.C2 10055U D1 C2; Mailed August 1, 2018,	
		POON, ROBERT, "Final OA", USSN 12/647,515; Filed December 27, 2009; Attorney Docket No. BPMDL0005JT.P1 (10055U CIP); Mailed April 7, 2015,	
		POON, ROBERT, "Final OA", USSN 12/647,515; Filed December 27, 2009; Attorney Docket No. BPMDL0005JT.P1 (10055U CIP); Mailed May 13, 2013,	

ALL REFERENCES CONSIDERED EXCEPT WHERE LINED THROUGH. /AMM/

Doc code: IDS
Doc description: Information Disclosure Statement (IDS) Field

PTO/SB/08a (01-10)
Approved for use through 07/31/2012. OMB 0651-0031
U.S. Patent and Trademark Office; U.S. DEPARTMENT OF COMMERCE
Under the Paperwork Reduction Act of 1995, no persons are required to respond to a collection of information unless it contains a valid OMB control number.

INFORMATION DISCLOSURE STATEMENT BY APPLICANT (Not for submission under 37 CFR 1.99)		
	Application Number	16/944,667
	Filing Date	July 31, 2020
	First Named Inventor	Jennifer E. Tomes
	Art Unit	
	Examiner Name	
	Attorney Docket Number	10055U CIP2 D1 C1C1C1C1C1

		POON, ROBERT, "Final OA", USSN 12/846,675; Filed July 29, 2010; Attorney Docket No. BPMDL0005JT.D1; Mailed December 18, 2013,	
		POON, ROBERT, "Final OA", USSN 13/153,300; Filed June 3, 2011; Attorney Docket No. BPMDL0005JT.P6 (10055U CIP6); Mailed August 6, 2013,	
		POON, ROBERT, "Final OA", USSN 13/374,509; Filed December 30, 2011; Attorney Docket No. BPMDL0005JT.P4 (10055U CIP4); Mailed August 6, 2013,	
		POON, ROBERT, "Final OA", USSN 14/265,909; Filed April 30, 2014; Attorney Docket No. BPMDL0005JT.D1.C1 (10055U D1 C1); Mailed January 10, 2017,	
		POON, ROBERT, "Final OA", USSN 14/265,909; Filed April 30, 2015; Attorney Docket No. BPMDL0005JT.D1.C1 (10055U D1 C1); Mailed October 5, 2015,	
		POON, ROBERT, "Final OA", USSN 14/265,920; Filed April 30, 2014; Attorney Docket No. BPMDL0005JT.D1.C2 (10055U D1 C2); Mailed October 2, 2015,	
		POON, ROBERT, "Final OA", USSN 14/718,792; Filed May 21, 2015; Attorney Docket No. BPMDL0005JT.P1.C1 (10055U CIP C1); Mailed January 5, 2016,	
		POON, ROBERT, "Final OA", USSN 15/067,903; Filed March 11, 2016; Attorney Docket No. MDL5JTP1C1C1 10055UP1C1C1; Mailed January 13, 2017,	

ALL REFERENCES CONSIDERED EXCEPT WHERE LINED THROUGH. /AMM/

Doc code: IDS
Doc description: Information Disclosure Statement (IDS) Field

PTO/SB/08a (01-10)
Approved for use through 07/31/2012. OMB 0651-0031
U.S. Patent and Trademark Office; U.S. DEPARTMENT OF COMMERCE
Under the Paperwork Reduction Act of 1995, no persons are required to respond to a collection of information unless it contains a valid OMB control number.

INFORMATION DISCLOSURE STATEMENT BY APPLICANT (Not for submission under 37 CFR 1.99)		
	Application Number	16/944,667
	Filing Date	July 31, 2020
	First Named Inventor	Jennifer E. Tomes
	Art Unit	
	Examiner Name	
	Attorney Docket Number	10055U CIP2 D1 C1C1C1C1C1

		POON, ROBERT, "Final Office Action", USSN 12/495,148, Filed June 30, 2009, Attorney Docket No. BPMDL0005JT (10055U), Art Unit 3788, Mailed March 3, 2011,	
		POON, ROBERT, "Final Office Action", USSN 12/495,148; Filed June 30, 2009; Attorney Docket No. BPMDL0005JT (10055U); Mailed July 31, 2013,	
		POON, ROBERT, "Final Office Action", USSN 12/846,675; Filed July 29, 2010; Attorney Docket No. BPMDL0005JT.D1 (10055U D1); Mailed September 26, 2012,	
		POON, ROBERT, "Final Office Action", USSN 14/718,912; Filed May 21, 2015; Attorney Docket No. BPMDL5JTP1C1 (10055UP1C1); Mailed January 5, 2016,	
		POON, ROBERT, "Final Office Action", USSN 15/703,514; Filed September 13, 2017; Attorney Docket No. 1037-002-09US; Mailed May 2, 2019,	
		POON, ROBERT, "Final Office Action", USSN 15/703,514; Mailed May 2, 2019,	
		POON, ROBERT, "Final Office Action", USSN 15/803,383; Filed November 3, 2017; Attorney Docket No. 1037-002-08-US; Mailed July 25, 2019,	
		POON, ROBERT, "Final Office Action", USSN 15/804,520; Filed November 6, 2017; Attorney Docket No. 1037-001-02US; Mailed August 8, 2019,	

ALL REFERENCES CONSIDERED EXCEPT WHERE LINED THROUGH. /AMM/

Doc code: IDS
Doc description: Information Disclosure Statement (IDS) Field

PTO/SB/08a (01-10)
Approved for use through 07/31/2012. OMB 0651-0031
U.S. Patent and Trademark Office; U.S. DEPARTMENT OF COMMERCE
Under the Paperwork Reduction Act of 1995, no persons are required to respond to a collection of information unless it contains a valid OMB control number.

INFORMATION DISCLOSURE STATEMENT BY APPLICANT (Not for submission under 37 CFR 1.99)		
	Application Number	16/944,667
	Filing Date	July 31, 2020
	First Named Inventor	Jennifer E. Tomes
	Art Unit	
	Examiner Name	
	Attorney Docket Number	10055U CIP2 D1 C1C1C1C1C1

		POON, ROBERT, "NonFinal OA", USSN 12/495,148; Filed June 30, 2009; Attorney Docket No. BPMDL0005JT (10055U); Mailed October 4, 2012,	
		POON, ROBERT, "NonFinal OA", USSN 12/647,515; Filed December 27, 2009; Attorney Docket No. BPMDL0005JT.P1 (10055U CIP); Mailed December 18, 2013,	
		POON, ROBERT, "NonFinal OA", USSN 12/846,675; Filed July 29, 2010; Attorney Docket No. BPMDL0005JT.D1 (10055U D1); Mailed September 10, 2013,	
		POON, ROBERT, "NonFinal OA", USSN 14/265,909; Filed April 30, 2014; Attorney Docket No. BPMDL0005JT.D1.C1 (10055U D1 C1); Mailed September 12, 2016,	
		POON, ROBERT, "NonFinal OA", USSN 14/265,909; Filed April 30, 2014; Attorney Docket No. BPMDL5JT.D1.C1 (10055UD1C1); Mailed December 31, 2014,	
		POON, ROBERT, "NonFinal OA", USSN 14/265,920; Filed April 30, 2014; Attorney Docket No. BPMDL0005JT.D1.C2 (10055U D1 C2); Mailed December 30, 2014,	
		POON, ROBERT, "NonFinal OA", USSN 14/718,792; Filed May 21, 2015; Attorney Docket No. BPMDL5JTP1C1 10055UP1C1; Mailed November 19, 2015,	
		POON, ROBERT, "NonFinal OA", USSN 15/067,903; Filed March 11, 2016; Attorney Docket No. BPMDL5JTP1C1C1 10055UP1C1C1; Mailed June 30, 2016,	

ALL REFERENCES CONSIDERED EXCEPT WHERE LINED THROUGH. /AMM/

Doc code: IDS
Doc description: Information Disclosure Statement (IDS) Field

PTO/SB/08a (01-10)
Approved for use through 07/31/2012. OMB 0651-0031
U.S. Patent and Trademark Office; U.S. DEPARTMENT OF COMMERCE
Under the Paperwork Reduction Act of 1995, no persons are required to respond to a collection of information unless it contains a valid OMB control number.

INFORMATION DISCLOSURE STATEMENT BY APPLICANT (Not for submission under 37 CFR 1.99)		
	Application Number	16/944,667
	Filing Date	July 31, 2020
	First Named Inventor	Jennifer E. Tomes
	Art Unit	
	Examiner Name	
	Attorney Docket Number	10055U CIP2 D1 C1C1C1C1C1

		POON, ROBERT, "NonFinal OA", USSN 15/803,383; Filed November 3, 2017; Attorney Docket No. BPMDL 10055UCIP2D1C1C1C1; Mailed March 7, 2018,	
		POON, ROBERT, "NonFinal OA", USSN 15/804,520; Filed November 6, 2017; Attorney Docket No. 1037-001-02-US; Mailed January 19, 2018,	
		POON, ROBERT, "Non-Final OA", USSN 14/265,909; Fled April 30, 2014; Attorney Docket No. 1037-001-00US; Mailed August 24, 2017,	
		POON, ROBERT, "NonFinal Office Action", 15/703,514; Filed September 13, 2017; Attorney Docket No. BPMDL5JTP5C1 10055UCIP5C1; Mailed June 22, 2018,	
		POON, ROBERT, "NonFinal Office Action", USSN 12/647,515; Filed December 27, 2009; Attorney Docket No. BPMDL0005JT.P1 (10055U CIP); Mailed June 28, 2012,	
		POON, ROBERT, "NonFinal Office Action", USSN 12/846,675; Filed July 29, 2010; Attorney Docket No. BPMDL0005JT.D1 (10055U.D1); Mailed December 22, 2011,	
		POON, ROBERT, "NonFinal Office Action", USSN 13/153,300; Filed June 3, 2011; Attorney Docket No. BPMDL0005JT CIP6 (10055U CIP6); Mailed October 1, 2012,	
		POON, ROBERT, "NonFinal Office Action", USSN 13/374,509; Filed December 30, 2011; Attorney Docket No. BPMDL005JT.P4 (10055UCIP4); Mailed October 2, 2012,	

ALL REFERENCES CONSIDERED EXCEPT WHERE LINED THROUGH. /AMM/

Doc code: IDS
Doc description: Information Disclosure Statement (IDS) Field

PTO/SB/08a (01-10)
Approved for use through 07/31/2012. OMB 0651-0031
U.S. Patent and Trademark Office; U.S. DEPARTMENT OF COMMERCE
Under the Paperwork Reduction Act of 1995, no persons are required to respond to a collection of information unless it contains a valid OMB control number.

INFORMATION DISCLOSURE STATEMENT BY APPLICANT (Not for submission under 37 CFR 1.99)		
	Application Number	16/944,667
	Filing Date	July 31, 2020
	First Named Inventor	Jennifer E. Tomes
	Art Unit	
	Examiner Name	
	Attorney Docket Number	10055U CIP2 D1 C1C1C1C1C1

		POON, ROBERT, "NonFinal Office Action", USSN 15/804,520; Filed November 6, 2017; Attorney Docket No. 1037-001-02US; Mailed June 6, 2018,	
		POON, ROBERT, "NonFinal Office Action", USSN 16/258,231; Filed January 25, 2019; Attorney Docket No. 10055U D1 C2 C1; Mailed October 2, 2019,	
		POON, ROBERT, "Non-Final Office Action", USSN 12/495,148; filed 06/30/2009; first inventor: Jennifer E. Tomes; attorney docket number: BPMDL0005JT (10055U); art unit: 3728; mailed: 08/04/2010,	
		POON, ROBERT, "Non-Final Office Action", USSN 15/803,393; Filed November 3, 2017; Attorney Docket No. 1037-002-08US Mailed October 15, 2018,	
		POON, ROBERT, "Non-Final Office Action", USSN 15/804,520; Filed November 6, 2017; Attorney Docket No. 1037-001-02US; Mailed November 2, 2018,	
		POON, ROBERT, "Notice of Allowance", USSN 12/495,148; Filed June 30, 2009; Attorney Docket No. BPMDL0005JT (10055U); Mailed November 20, 2013,	
		POON, ROBERT, "Notice of Allowance", USSN 12846675; Filed July 29, 2010; Attorney Docket No. BPMDL0005JT.D1 (10055U D1); Mailed April 30, 2014,	
		POON, ROBERT, "Notice of Allowance", USSN 14/265,920; Filed April 30, 2014; Attorney Docket No. BPMDL0005JT.D1.C2 (10055U D1 C2); Mailed November 28, 2018,	

ALL REFERENCES CONSIDERED EXCEPT WHERE LINED THROUGH. /AMM/

Doc code: IDS
Doc description: Information Disclosure Statement (IDS) Field

PTO/SB/08a (01-10)
Approved for use through 07/31/2012. OMB 0651-0031
U.S. Patent and Trademark Office; U.S. DEPARTMENT OF COMMERCE
Under the Paperwork Reduction Act of 1995, no persons are required to respond to a collection of information unless it contains a valid OMB control number.

INFORMATION DISCLOSURE STATEMENT BY APPLICANT (Not for submission under 37 CFR 1.99)		
	Application Number	16/944,667
	Filing Date	July 31, 2020
	First Named Inventor	Jennifer E. Tomes
	Art Unit	
	Examiner Name	
	Attorney Docket Number	10055U CIP2 D1 C1C1C1C1C1

		POON, ROBERT, "Notice of Allowance", USSN 14/718,792; Filed May 21, 2015; Attorney Docket No. BPMDL0005JT.CIP.C1 (10055U CIP C1); Mailed February 2, 2016,	
		POON, ROBERT, "Notice of Allowance", USSN 14265,909; Filed April 30, 2014; Attorney Docket No. 1037-001-00US; Mailed October 2, 2017,	
		POON, ROBERT, "Notice of allowance", USSN 15/067,903; Filed March 11, 2016; Attorney Docket No. 1037-001-01US; Mailed August 23, 2017,	
		POON, ROBERT, "Restriction Requirement", USSN 12/647,515; Filed December 27, 2009; Attorney Docket No. BPMDL0005JT.P1 (10055U CIP); Mailed May 23, 2012,	
		POTHIER, ANDREW, "NonFinal OA", Canadian Application No. 2,837,289; Attorney Docket No. 10055U CIP5 CA; Mailed February 14, 2018,	
		POTHIER, ANDREW, "NonFinal Office Action", Canadian Patent Application No. 2,822,905; Reference No. 15468-P44352CA00 (10055U CIP4 CA); Mailed August 31, 2018,	
		POTHIER, ANDREW, "Non-Final Office Action", Canadian Application No. 2,837,289; Mailed June 27, 2019,	
		POTHIER, ANDREW, "Non-Final Office Action", Canadian Application No.: 2,822,905; File No. 15468-P44352CA00; Mailed December 18, 2017,	

ALL REFERENCES CONSIDERED EXCEPT WHERE LINED THROUGH. /AMM/

Doc code: IDS
Doc description: Information Disclosure Statement (IDS) Field

PTO/SB/08a (01-10)
Approved for use through 07/31/2012. OMB 0651-0031
U.S. Patent and Trademark Office; U.S. DEPARTMENT OF COMMERCE
Under the Paperwork Reduction Act of 1995, no persons are required to respond to a collection of information unless it contains a valid OMB control number.

INFORMATION DISCLOSURE STATEMENT BY APPLICANT (Not for submission under 37 CFR 1.99)		
	Application Number	16/944,667
	Filing Date	July 31, 2020
	First Named Inventor	Jennifer E. Tomes
	Art Unit	
	Examiner Name	
	Attorney Docket Number	10055U CIP2 D1 C1C1C1C1C1

		POTHIER, ANDREW, "Office Action", Canadian Application No. 2,822,905; Attorney Docket No. 10055U CIP4 CA; Mailed June 13, 2019,	
		POTHIER, ANDREW, "Office Action", Canadian Application No. 2,822,905; Reference No. 15468-P44352CA00; Mailed May 1, 2017,	
		POTHIER, ANDREW, "Office Action", Canadian Application NO. 2,837,289; Dated October 29, 2018,	
		POWER, "Postoperative behavior changes and pain in children, 2 to 12 years, following inpatient and day case surgery", University College London; http://discovery.ucl.ac.uk/643438/1/643438.pdf, August 2010,	
		PRANGE, SHARON M., "Response to First Office Action", USSN 12/004,796, Filed December 21, 2007; Attorney Docket No. 213786-00044USPI; Mailed October 28, 2009,	
		SCHULTZ, OTTMAR, "Extended European Search Report", EP Application NO. 16177903.8 - 1501; Filed June 30, 2009; Attorney Docket No. 10055U EP D1; Mailed October 27, 2016,	
		THOMSEN, TODD, "Male Urethral Catheterization", N. Engl. J. Med Vol. 354:e22; Published 2006,	
		VAN POELGEEST, A, "Exam Report", EP Application No. 12792423.1; Mailed September 17, 2019,	

ALL REFERENCES CONSIDERED EXCEPT WHERE LINED THROUGH. /AMM/

Doc code: IDS
Doc description: Information Disclosure Statement (IDS) Field

PTO/SB/08a (01-10)
Approved for use through 07/31/2012. OMB 0651-0031
U.S. Patent and Trademark Office; U.S. DEPARTMENT OF COMMERCE
Under the Paperwork Reduction Act of 1995, no persons are required to respond to a collection of information unless it contains a valid OMB control number.

INFORMATION DISCLOSURE STATEMENT BY APPLICANT (Not for submission under 37 CFR 1.99)		
	Application Number	16/944,667
	Filing Date	July 31, 2020
	First Named Inventor	Jennifer E. Tomes
	Art Unit	
	Examiner Name	
	Attorney Docket Number	10055U CIP2 D1 C1C1C1C1C1

		VAN POELGEEST, A, "Exam Report", European Application No. 12793939.5; Attorney Reference 10055U CIP5 EP; Mailed October 7, 2019,	
		VAN POELGEEST, A, "Examination Report", EP Application No. 11 854 003.8-1113; September 17, 2019,	
		VASAT, PETER, "NonFinal OA", USSN 12/785,064; Filed May 21, 2010; Attorney Docket No. BPMDL0018RL (10212U); Mailed February 9, 2018,	
		VASAT, PETER, "Notice of Allowance", USSN 12/785,064; Filed May 21, 2010; Attorney Docket No. BPMDL0018RL (10212U); Mailed September 12, 2016,	
		YUAN, MINQIANG, "Non-Final Office Action", Chinese Application No. 200920267201.2, Mailed September 9, 2010.	
		YUAN, MINQUIANG, "Non-Final Office Action", Chinese Application No. 200920267201.2, Attorney Docket No. BPMDL0005JT.CHIN (10055U.CN); Mailed June 4, 2010.	
		ZEEV, et al., "Family-centered Preparation for Surgery Improves Perioperative Outcomes in Children: A randomized Controlled Trial"", Anesthesiology, 106, Pages 65-74; https://anesthesiology.pubs.asahq.org/article.aspx?articleid=1922803 ; January 2007,	
		LAWRENCE, SAMANTHA , "Notice of Allowance", USSN 29/479,600; Filed January 17, 2014; Attorney Docket No. BPMDL6C1D3C2 10056DC1D3C2; Mailed February 24, 2020,	

ALL REFERENCES CONSIDERED EXCEPT WHERE LINED THROUGH. /AMM/

Doc code: IDS
Doc description: Information Disclosure Statement (IDS) Field

PTO/SB/08a (01-10)
Approved for use through 07/31/2012. OMB 0651-0031
U.S. Patent and Trademark Office; U.S. DEPARTMENT OF COMMERCE
Under the Paperwork Reduction Act of 1995, no persons are required to respond to a collection of information unless it contains a valid OMB control number.

INFORMATION DISCLOSURE STATEMENT BY APPLICANT (Not for submission under 37 CFR 1.99)		
	Application Number	16/944,667
	Filing Date	July 31, 2020
	First Named Inventor	Jennifer E. Tomes
	Art Unit	
	Examiner Name	
	Attorney Docket Number	10055U CIP2 D1 C1C1C1C1C1

		MARCETICH, ADAM , "Notice of Allowance", USSN 15/684,787; Filed August 23, 2017; Attorney Docket No. BPMDL 10055UCIP2D1C1C1; Mailed February 27, 2020,	
		POON, ROBERT , "NonFinal Office Action", USSN 15/703,514; Filed September 13, 2017; Attorney Docket No. 1037-002-09US; Mailed March 17, 2020,	
		POON, ROBERT , "Non-Final Office Action", USSN 15/803,383; Filed November 3, 2017; Attorney Docket No. 1037-002-08US; mailed March 16, 2020,	
		"Final Written Decision", IPR 2019-00109; Mailed May 4, 2020; Patent No. 9,795,761,	
		"Final Written Decision", IPR 2019-00208; Patent No. 9,808,400; Entered June 3, 2020; Docket No. 10055U D1 C1,	
		"Final Written Decision", IPR 2019-00223; Patent No. 9,808,596; Entered June 3, 2020; 10055U CIP C1 C1,	
		POTHIER, ANDREW , "Office Action", Canadian Application No. 2,837,289; Mailed February 27, 2020,	
		POTHIER, ANDREW , "Office Action", Canadian Application No. 2822905; Mailed February 27, 2020,	

ALL REFERENCES CONSIDERED EXCEPT WHERE LINED THROUGH. /AMM/

Receipt date: 08/04/2020

Doc code: IDS
Doc description: Information Disclosure Statement (IDS) Field

PTO/SB/08a (01-10)
Approved for use through 07/31/2012. OMB 0651-0031
U.S. Patent and Trademark Office; U.S. DEPARTMENT OF COMMERCE

Under the Paperwork Reduction Act of 1995, no persons are required to respond to a collection of information unless it contains a valid OMB control number.

INFORMATION DISCLOSURE STATEMENT BY APPLICANT (Not for submission under 37 CFR 1.99)		
	Application Number	16/944,667
	Filing Date	July 31, 2020
	First Named Inventor	Jennifer E. Tomes
	Art Unit	
	Examiner Name	
	Attorney Docket Number	10055U CIP2 D1 C1C1C1C1C1

		"Final Written Decision", IPR 2019-00035; Patent No. 9,745,008; Entered April 8, 2020; Docket No. 10055U CIP2 D1 C1,	
		"Final Written Decision", IPR 2019-00036; Patent No. 9,745,008; Entered April 8, 2020; Docket No. 10055U CIP2 D1 C1,	

EXAMINER SIGNATURE

Examiner Signature	/Adam Marcetich/	Date Considered	09/29/2022

*EXAMINER: Initial if reference considered, whether or not citation is in conformance with MPEP 609. Draw line through a citation if not in conformance and not considered. Include copy of this form with next communication to applicant.

[1] See Kind Codes of USPTO Patent Documents at www.USPTO.GOV or MPEP 901.04. [2] Enter office that issued the document, by the two-letter code (WIPO Standard ST.3). [3] For Japanese patent documents, the indication of the year of the reign of the Emperor must precede the serial number of the patent document.
[4] Kind of document by the appropriate symbols as indicated on the document under WIPO Standard ST.16 if possible. [5] Applicant is to place a check mark here if English language translation is attached.

ALL REFERENCES CONSIDERED EXCEPT WHERE LINED THROUGH. /AMM/

Receipt date: 06/22/2021

Doc code: IDS
Doc description: Information Disclosure Statement (IDS) Field

PTO/SB/08a (01-10)
Approved for use through 07/31/2012. OMB 0651-0031
U.S. Patent and Trademark Office; U.S. DEPARTMENT OF COMMERCE
Under the Paperwork Reduction Act of 1995, no persons are required to respond to a collection of information unless it contains a valid OMB control number.

INFORMATION DISCLOSURE STATEMENT BY APPLICANT (Not for submission under 37 CFR 1.99)		
	Application Number	16/944,667
	Filing Date	Jul 31, 2020
	First Named Inventor	Jennifer E. Tomes
	Art Unit	
	Examiner Name	
	Attorney Docket Number	BPMDL0005JT.P2.D1.C1.C1.C1.C1.C1

U.S.PATENTS

Examiner Initial*	Cite No	Patent Number	Kind Code [1]	Issue Date	Name of Patentee or Applicant of cited Document	Pages, Columns, Lines, Where Relevant Passages or Relevant Figures Appear
		5289919		1994-03-01	Fischer	
		10640243		2020- 05-05	Tomes et al.	

U.S.PATENT APPLICATION PUBLICATIONS

Examiner Initial*	Cite No	Publication Number	Kind Code [1]	Publication Date	Name of Patentee or Applicant of cited Document	Pages, Columns, Lines, Where Relevant Passages or Relevant Figures Appear
		20040031721		2004-02-19	Mann, David M.	
		20170202699		2017-07-20	Zani et al.	
		20170216558		2017-08-03	Hughett et al.	
		20170368302		2017-12-18	Brooks, Christopher	
		20190344044		2019-11-14	Dickinson et al.	

FOREIGN PATENT DOCUMENTS

ALL REFERENCES CONSIDERED EXCEPT WHERE LINED THROUGH. /AMM/

Receipt date: 06/22/2021

Doc code: IDS
Doc description: Information Disclosure Statement (IDS) Field

PTO/SB/08a (01-10)
Approved for use through 07/31/2012. OMB 0651-0031
U.S. Patent and Trademark Office; U.S. DEPARTMENT OF COMMERCE

Under the Paperwork Reduction Act of 1995, no persons are required to respond to a collection of information unless it contains a valid OMB control number.

INFORMATION DISCLOSURE STATEMENT BY APPLICANT (Not for submission under 37 CFR 1.99)		
	Application Number	16/944,667
	Filing Date	Jul 31, 2020
	First Named Inventor	Jennifer E. Tomes
	Art Unit	
	Examiner Name	
	Attorney Docket Number	BPMDL0005JT.P2.D1.C1.C1.C1.C1.C1.C1

Examiner Initial*	Cite No	Foreign Document Number[3]	Country Code[2]	Kind Code[4]	Publication Date	Name of Patentee or Applicant of cited Document	Pages,Columns,Lines where Relevant Passages or Relevant Figures Appear	T[5]

NON-PATENT LITERATURE DOCUMENTS

Examiner Initials*	Cite No	Include name of the author (in CAPITAL LETTERS), title of the article (when appropriate), title of the item (book, magazine, journal, serial, symposium, catalog, etc.), date, page(s), volume-issue number(s), publisher, city and/or country where published.	T[5]
		"Summons to Attend Oral Proceedings", EP Application 11854003.8; Mailed December 22, 2020; 10055U CIP4 EP,	
		"Summons to Attend Oral Proceedings", EP Application 12792423.1; Mailed December 22, 2020; 10055U CIP6 EP,	
		"Summons to Attend Oral Proceedings", EP Application 12793939.5; Mailed December 23, 2020; 10055U CIP5 EP,	
		ARBLE, JESSICA , "Final OA", USSN 15/977,944; Filed May 11, 2018; Attorney Docket No. 10055U NP1; Mailed August 5, 2020,	
		ARBLE, JESSICA , "NonFinal Office Action", USSN 15/977,944; Filed May 11, 2018; Attorney Docket No. 10055U NP1; Mailed April 28, 2020,	

ALL REFERENCES CONSIDERED EXCEPT WHERE LINED THROUGH. /AMM/

Receipt date: 06/22/2021

Doc code: IDS
Doc description: Information Disclosure Statement (IDS) Field

PTO/SB/08a (01-10)
Approved for use through 07/31/2012. OMB 0651-0031
U.S. Patent and Trademark Office; U.S. DEPARTMENT OF COMMERCE

Under the Paperwork Reduction Act of 1995, no persons are required to respond to a collection of information unless it contains a valid OMB control number.

INFORMATION DISCLOSURE STATEMENT BY APPLICANT (Not for submission under 37 CFR 1.99)		
	Application Number	16/944,667
	Filing Date	Jul 31, 2020
	First Named Inventor	Jennifer E. Tomes
	Art Unit	
	Examiner Name	
	Attorney Docket Number	BPMDL0005JT.P2.D1.C1.C1.C1.C1.C1

		ARBLE, JESSICA , "NonFinal Office Action", USSN 15/977,944; Filed May 11, 2018; Attorney Docket No. 10055U NP1; Mailed February 3, 2021,	
		ARBLE, JESSICA , "Notice of Allowance", USSN 15/977,944; Filed May 11, 2018; Attorney Docket No. 10055U NP1; Mailed August 17, 2021,	
		POON, ROBERT , "NonFinal Office Action", USSN 16/258,231; Filed January 25, 2019; Attorney Docket NO. 10055U D1 C2 C1; Mailed March 31, 2021,	
		POON, ROBERT , "Notice of Allowance", USSN 15/703,514; Filed September 13, 2017; Attorney Docket No. 1037-002-09US; Mailed November 23, 2020,	
		POON, ROBERT , "Notice of Allowance", USSN 15/803,383; Filed November 3, 2017; Attorney Docket No. 1037-002-08US; Mailed November 27, 2020,	

EXAMINER SIGNATURE

Examiner Signature	/Adam Marcetich/	Date Considered	09/29/2022

*EXAMINER: Initial if reference considered, whether or not citation is in conformance with MPEP 609. Draw line through a citation if not in conformance and not considered. Include copy of this form with next communication to applicant.

ALL REFERENCES CONSIDERED EXCEPT WHERE LINED THROUGH. /AMM/

Receipt date: 06/22/2021

Doc code: IDS
Doc description: Information Disclosure Statement (IDS) Field

PTO/SB/08a (01-10)
Approved for use through 07/31/2012. OMB 0651-0031
U.S. Patent and Trademark Office; U.S. DEPARTMENT OF COMMERCE

Under the Paperwork Reduction Act of 1995, no persons are required to respond to a collection of information unless it contains a valid OMB control number.

INFORMATION DISCLOSURE STATEMENT BY APPLICANT (Not for submission under 37 CFR 1.99)	**Application Number**	16/944,667
	Filing Date	Jul 31, 2020
	First Named Inventor	Jennifer E. Tomes
	Art Unit	
	Examiner Name	
	Attorney Docket Number	BPMDL0005JT.P2.D1.C1.C1.C1.C1.C1

[1] See Kind Codes of USPTO Patent Documents at www.USPTO.GOV or MPEP 901.04. [2] Enter office that issued the document, by the two-letter code (WIPO Standard ST.3). [3] For Japanese patent documents, the indication of the year of the reign of the Emperor must precede the serial number of the patent document.
[4] Kind of document by the appropriate symbols as indicated on the document under WIPO Standard ST.16 if possible. [5] Applicant is to place a check mark here if English language translation is attached.

ALL REFERENCES CONSIDERED EXCEPT WHERE LINED THROUGH. /AMM/

Receipt date: 06/22/2021

Doc code: IDS
Doc description: Information Disclosure Statement (IDS) Field

PTO/SB/08a (01-10)
Approved for use through 07/31/2012. OMB 0651-0031
U.S. Patent and Trademark Office; U.S. DEPARTMENT OF COMMERCE

Under the Paperwork Reduction Act of 1995, no persons are required to respond to a collection of information unless it contains a valid OMB control number.

INFORMATION DISCLOSURE STATEMENT BY APPLICANT (Not for submission under 37 CFR 1.99)	**Application Number**	16/944,667
	Filing Date	Jul 31, 2020
	First Named Inventor	Jennifer E. Tomes
	Art Unit	
	Examiner Name	
	Attorney Docket Number	BPMDL0005JT.P2.D1.C1.C1.C1.C1.C1.C1

CERTIFICATION STATEMENT

Please see 37 CFR 1.97 and 1.98 to make the appropriate selection(s):

☐ That each item of information contained in the information disclosure statement was first cited in any communication from a foreign patent office in a counterpart foreign application not more than three months prior to the filing of the information disclosure statement. See 37 CFR 1.97(e) (1).

OR

☐ That no item of information contained in the information disclosure statement was cited in a communication from a foreign patent office in a counterpart foreign application, and, to the knowledge of the person signing the certification after making reasonable inquiry, no item of information contained in the information disclosure statement was known to any individual designated in 37 CFR 1.56(c) more than three months prior to the filing of the information disclosure statement. See 37 CFR 1.97(e) (2).

☐ See attached certification statement.

☐ Fee set forth in 37 CFR 1.17 (p) has been submitted herewith.

☒ None

SIGNATURE

A signature of the applicant or representative is required in accordance with CFR 1.33, 10.18. Please see CFR 1.4(d) for the form of the signature.

Signature	/Philip H. Burrus, IV/	Date (YYYY-MM-DD)	2021-6-22
Name/Print	Philip H. Burrus	Registration Number	45,432

This collection of information is required by 37 CFR 1.97 and 1.98. The information is required to obtain or retain a benefit by the public which is to file (and by the USPTO to process) an application. Confidentiality is governed by 35 U.S.C. 122 and 37 CFR 1.14. This collection is estimated to take 1 hour to complete, including gathering, preparing and submitting the completed application form to the USPTO. Time will vary depending upon the individual case. Any comments on the amount of time you require to complete this form and/or suggestions for reducing this burden, should be sent to the Chief Information Officer, U.S. Patent and Trademark Office, U.S. Department of Commerce, P.O. Box 1450, Alexandria, VA 22313-1450. DO NOT SEND FEES OR COMPLETED FORMS TO THIS ADDRESS. **SEND TO: Commissioner for Patents, P.O. Box 1450, Alexandria, VA 22313-1450.**

ALL REFERENCES CONSIDERED EXCEPT WHERE LINED THROUGH. /AMM/

Receipt date: 08/04/2020

Doc code: IDS
Doc description: Information Disclosure Statement (IDS) Field

PTO/SB/08a (01-10)
Approved for use through 07/31/2012. OMB 0651-0031
U.S. Patent and Trademark Office; U.S. DEPARTMENT OF COMMERCE

Under the Paperwork Reduction Act of 1995, no persons are required to respond to a collection of information unless it contains a valid OMB control number.

INFORMATION DISCLOSURE STATEMENT BY APPLICANT (Not for submission under 37 CFR 1.99)		
	Application Number	16/944,667
	Filing Date	Jul 31, 2020
	First Named Inventor	Jennifer E. Tomes
	Art Unit	
	Examiner Name	
	Attorney Docket Number	10055U CIP2 D1 C1C1C1C1C1

U.S.PATENTS

Examiner Initial*	Cite No	Patent Number	Kind Code[1]	Issue Date	Name of Patentee or Applicant of cited Document	Pages, Columns, Lines, Where Relevant Passages or Relevant Figures Appear

U.S.PATENT APPLICATION PUBLICATIONS

Examiner Initial*	Cite No	Publication Number	Kind Code[1]	Publication Date	Name of Patentee or Applicant of cited Document	Pages, Columns, Lines, Where Relevant Passages or Relevant Figures Appear

FOREIGN PATENT DOCUMENTS

Examiner Initial*	Cite No	Foreign Document Number[3]	Country Code[2]	Kind Code[4]	Publication Date	Name of Patentee or Applicant of cited Document	Pages,Columns,Lines where Relevant Passages or Relevant Figures Appear	T[5]

NON-PATENT LITERATURE DOCUMENTS

Examiner Initials*	Cite No	Include name of the author (in CAPITAL LETTERS), title of the article (when appropriate), title of the item (book, magazine, journal, serial, symposium, catalog, etc.), date, page(s), volume-issue number(s), publisher, city and/or country where published.	T[5]
		POON, ROBERT , "Final Office Action", USSN 16/258,231; Filed January 25, 2019; Attorney Docket No. 10055U D1 C2 C1; Mailed July 15, 2020,	

EXAMINER SIGNATURE

Examiner Signature	/Adam Marcetich/	Date Considered	09/29/2022

ALL REFERENCES CONSIDERED EXCEPT WHERE LINED THROUGH. /AMM/

Receipt date: 08/04/2020

Doc code: IDS
Doc description: Information Disclosure Statement (IDS) Field

PTO/SB/08a (01-10)
Approved for use through 07/31/2012. OMB 0651-0031
U.S. Patent and Trademark Office; U.S. DEPARTMENT OF COMMERCE

Under the Paperwork Reduction Act of 1995, no persons are required to respond to a collection of information unless it contains a valid OMB control number.

INFORMATION DISCLOSURE STATEMENT BY APPLICANT (Not for submission under 37 CFR 1.99)		
	Application Number	16/944,667
	Filing Date	Jul 31, 2020
	First Named Inventor	Jennifer E. Tomes
	Art Unit	
	Examiner Name	
	Attorney Docket Number	10055U CIP2 D1 C1C1C1C1C1

*EXAMINER: Initial if reference considered, whether or not citation is in conformance with MPEP 609. Draw line through a citation if not in conformance and not considered. Include copy of this form with next communication to applicant.

[1] See Kind Codes of USPTO Patent Documents at www.USPTO.GOV or MPEP 901.04. [2] Enter office that issued the document, by the two-letter code (WIPO Standard ST.3). [3] For Japanese patent documents, the indication of the year of the reign of the Emperor must precede the serial number of the patent document.
[4] Kind of document by the appropriate symbols as indicated on the document under WIPO Standard ST.16 if possible. [5] Applicant is to place a check mark here if English language translation is attached.

ALL REFERENCES CONSIDERED EXCEPT WHERE LINED THROUGH. /AMM/

Receipt date: 08/04/2020

Doc code: IDS
Doc description: Information Disclosure Statement (IDS) Field

PTO/SB/08a (01-10)
Approved for use through 07/31/2012. OMB 0651-0031
U.S. Patent and Trademark Office; U.S. DEPARTMENT OF COMMERCE

Under the Paperwork Reduction Act of 1995, no persons are required to respond to a collection of information unless it contains a valid OMB control number.

INFORMATION DISCLOSURE STATEMENT BY APPLICANT (Not for submission under 37 CFR 1.99)		
	Application Number	16/944,667
	Filing Date	Jul 31, 2020
	First Named Inventor	Jennifer E. Tomes
	Art Unit	
	Examiner Name	
	Attorney Docket Number	10055U CIP2 D1 C1C1C1C1C1

CERTIFICATION STATEMENT

Please see 37 CFR 1.97 and 1.98 to make the appropriate selection(s):

☐ That each item of information contained in the information disclosure statement was first cited in any communication from a foreign patent office in a counterpart foreign application not more than three months prior to the filing of the information disclosure statement. See 37 CFR 1.97(e) (1).

OR

☐ That no item of information contained in the information disclosure statement was cited in a communication from a foreign patent office in a counterpart foreign application, and, to the knowledge of the person signing the certification after making reasonable inquiry, no item of information contained in the information disclosure statement was known to any individual designated in 37 CFR 1.56(c) more than three months prior to the filing of the information disclosure statement. See 37 CFR 1.97(e) (2).

☐ See attached certification statement.

☐ Fee set forth in 37 CFR 1.17 (p) has been submitted herewith.

☒ None

SIGNATURE

A signature of the applicant or representative is required in accordance with CFR 1.33, 10.18. Please see CFR 1.4(d) for the form of the signature.

Signature	/Philip H. Burrus, IV/	Date (YYYY-MM-DD)	2020-8-4
Name/Print	Philip H. Burrus	Registration Number	45,432

This collection of information is required by 37 CFR 1.97 and 1.98. The information is required to obtain or retain a benefit by the public which is to file (and by the USPTO to process) an application. Confidentiality is governed by 35 U.S.C. 122 and 37 CFR 1.14. This collection is estimated to take 1 hour to complete, including gathering, preparing and submitting the completed application form to the USPTO. Time will vary depending upon the individual case. Any comments on the amount of time you require to complete this form and/or suggestions for reducing this burden, should be sent to the Chief Information Officer, U.S. Patent and Trademark Office, U.S. Department of Commerce, P.O. Box 1450, Alexandria, VA 22313-1450. DO NOT SEND FEES OR COMPLETED FORMS TO THIS ADDRESS. **SEND TO: Commissioner for Patents, P.O. Box 1450, Alexandria, VA 22313-1450.**

ALL REFERENCES CONSIDERED EXCEPT WHERE LINED THROUGH. /AMM/

PE2E SEARCH - Search History (Prior Art)

Ref #	Hits	Search Query	DBs	Default Operator	Plurals	British Equivalents	Time Stamp
L176	83	(US-20140142465-$ or US-20100311026-$ or US-20090236259-$ or US-20030038475-$ or US-20040055925-$ or US-20070026472-$ or US-20040076564-$ or US-20040074593-$ or US-20110233079-$ or US-20110232234-$ or US-20110192115-$ or US-20110033137-$ or US-20020185406-$ or US-20050022822-$ or US-20100186754-$ or US-20060104856-$ or US-20020064478-$ or US-20050079093-$ or US-20060067855-$ or US-20090152160-$ or US-20090184026-$ or US-20070225687-$ or US-20110214679-$ or US-20060185326-$ or US-20070095699-$ or US-20150034521-$).did. or (US-20100252473-$ or US-20170319183-$ or US-20080272023-$ or US-20070197998-$ or US-20070161971-$ or US-20040004019-$ or US-20170216558-$ or US-20060009742-$ or US-20060025753-$ or US-20100307942-$ or US-20090099548-$ or US-20170349305-$ or US-20030159968-$).did. or (US-8678190-$ or US-4523679-$ or US-5635134-$ or US-5392917-$ or US-3750664-$ or US-5072832-$ or US-3998221-$ or US-4051845-$ or US-3650393-$ or US-6142152-$ or US-5174306-$ or US-3107786-$ or US-3225920-$ or US-	(US-PGPUB; USPAT; USOCR)	OR	OFF	OFF	2020/02/14 02:12 PM

Bard Exhibit 1004.0400

		3830035-$ or US-3780857-$ or US-3750663-$ or US-6382212-$ or US-9522753-$ or US-9693756-$ or US-6926708-$ or US-6896141-$ or US-3851649-$ or US-5447237-$ or US-5392918-$ or US-4282972-$ or US-4226328-$).did. or (US-6691946-$ or US-4170300-$ or US-5163557-$ or US-3485352-$ or US-4366901-$ or US-6012586-$ or US-8631935-$ or US-7401703-$ or US-6840379-$ or US-4160505-$ or US-3329261-$ or US-5364375-$ or US-4811847-$).did. or (US-3542019-$ or US-2734543-$ or US-3485352-$ or US-3329261-$ or US-3166189-$).did.					
L177	16	L176 and (chamber compartment depression slot tray zone area cavity concavity valley dip dipp$2) near5 (lubricat$3 jell$1 gell$1 jel gel)	(US-PGPUB; USPAT; USOCR)	OR	OFF	OFF	2020/02/14 02:13 PM
L178	1355146	(A61M A61B A61F).cpcl. and @Ad<"20110607"	(US-PGPUB; FPRS; EPO)	OR	OFF	OFF	2020/02/14 02:16 PM
L179	4634	L178 and (tray package packaging packaged enclos$3 envelop$3 bag wrap$1 wrapp$3 kit enclosure box) near4 (catheter cannula canula catheteri?ation catheteri?ing canulation cannulation cannuli?ation canuli?ation)	(US-PGPUB; USPAT; USOCR)	OR	OFF	OFF	2020/02/14 02:17 PM
L181	50	L179 and (chamber compartment depression slot tray	(US-PGPUB; USPAT; USOCR)	OR	OFF	OFF	2020/02/14 02:18 PM

Bard Exhibit 1004.0401

		zone area cavity concavity valley dip dipp$2) near5 (lubricat$3 jell$1 gell$1 jel gel) not L177					
L182	380	L179 and (chamber compartment depression slot tray zone area cavity concavity valley) near5 (spread$3 apply applying application dip$1 dipp$3) not (L177 L181)	(US-PGPUB; USPAT; USOCR)	OR	OFF	OFF	2020/02/14 03:07 PM
L183	1	(11/179505).APP.	(USPAT; USOCR)	OR	OFF	OFF	2020/02/18 09:08 AM
L184	20	("4925448" "5131537" "5163554" "5501341" "5947296" "20100116695" "20140144798" "20140231302" "20160193444" "9649472" "9795761" "9808400" "10106295" "10399846" "20090044964" "8662306" "20170368310" "10507073" "6517520" "8066670" "5919163" "6723084" "5607407" "7195615" "6585705" "5405334" "4767411" "5997524" "6213978").pn. and @Ad<"20110607"	(US-PGPUB; USPAT; USOCR)	OR	OFF	OFF	2020/02/18 09:09 AM
L185	1	(12/785064).APP.	(US-PGPUB; USOCR)	OR	OFF	OFF	2020/02/18 09:12 AM
L186	61	("3166189" "3633758" "3851649" "3926309" "3934721" "4111302" "4216860" "4262800" "4327723" "4351333" "4366901" "4405047" "4515592" "4568334" "4634433" "4713059" "4721123" "5098391" "5125416" "5163554" "5165540" "5178267" "5309604" "5344011" "5358495" "5392918" "5454792" "5470318" "5674241" "5681322" "5765682" "5848691" "5895374" "6217556"	(US-PGPUB; USPAT; USOCR)	OR	OFF	OFF	2020/02/18 09:22 AM

		"20020065505" "20040127816" "20050061698" "20050148936" "20050194276" "20060009742" "20060178577" "20060235505" "20070197998" "20070213810" "20070289887" "20080073231" "20080272012" "20090131917" "20100010622" "20110084039" "8177760" "8205745" "20140001068" "20160213880" "10532184" "3610242" "3467095" "3332424" "3323523" "3154080" "4507114" "6059107" "5957912" "4778447" "8177761" "4508367" "4270535" "4004586" "4211323" "4073297" "9492631" "6585703").pn. and @Ad<"20110607" not (L184)					
L187	1355153	(A61M A61B A61F).cpcl. and @Ad<"20110607"	(US-PGPUB; FPRS; EPO)	OR	OFF	OFF	2020/02/18 09:34 AM
L188	4634	L187 and (tray package packaging packaged enclos$3 envelop$3 bag wrap$1 wrapp$3 kit enclosure box) near4 (catheter cannula canula catheteri?ation catheteri?ing canulation cannulation cannuli?ation canuli?ation)	(US-PGPUB; USPAT; USOCR)	OR	OFF	OFF	2020/02/18 09:34 AM
L189	1461	L188 and (chamber compartment depression slot tray zone area cavity concavity valley dip dipp$2) near5 (lubricat$3 jell$1 gell$1 jel gel fluid$1 liquid$1 saline water)	(US-PGPUB; USPAT; USOCR)	OR	OFF	OFF	2020/02/18 09:34 AM
L190	921	L189 and (chamber$1 compartment$1	(US-PGPUB; USPAT; USOCR)	OR	ON	ON	2020/02/18 09:37 AM

Bard Exhibit 1004.0403

		depression tray wall$1 barrier$1 divider dividing separat?r rib$1) near5 (hole slit slot opening gap aperture window channel$1 communicat$3)					
L191	87	(US-20140142465-$ or US-20100311026-$ or US-20090236259-$ or US-20030038475-$ or US-20040055925-$ or US-20070026472-$ or US-20040076564-$ or US-20040074593-$ or US-20110233079-$ or US-20110232234-$ or US-20110192115-$ or US-20110033137-$ or US-20020185406-$ or US-20050022822-$ or US-20100186754-$ or US-20060104856-$ or US-20020064478-$ or US-20050079093-$ or US-20060067855-$ or US-20090152160-$ or US-20090184026-$ or US-20070225687-$ or US-20110214679-$ or US-20060185326-$ or US-20070095699-$ or US-20150034521-$).did. or (US-20100252473-$ or US-20170319183-$ or US-20080272023-$ or US-20070197998-$ or US-20070161971-$ or US-20040004019-$ or US-20170216558-$ or US-20060009742-$ or US-20060025753-$ or US-20100307942-$ or US-20090099548-$ or US-20170349305-$ or US-20030159968-$ or US-20090301927-$ or US-20060011501-$ or US-20110284410-$).did. or (US-8678190-$ or US-4523679-$ or US-5635134-$ or US-5392917-$ or US-3750664-$ or US-5072832-$ or US-3998221-$ or US-4051845-$ or US-	(US-PGPUB; USPAT; USOCR)	OR	OFF	OFF	2020/02/18 09:38 AM

Bard Exhibit 1004.0404

		3650393-$ or US-6142152-$ or US-5174306-$ or US-3107786-$ or US-3225920-$ or US-3830035-$ or US-3780857-$ or US-3750663-$ or US-6382212-$ or US-9522753-$ or US-9693756-$ or US-6926708-$ or US-6896141-$ or US-3851649-$ or US-5447237-$ or US-5392918-$ or US-4282972-$ or US-4226328-$).did. or (US-6691946-$ or US-4170300-$ or US-5163557-$ or US-3485352-$ or US-4366901-$ or US-6012586-$ or US-8631935-$ or US-7401703-$ or US-6840379-$ or US-4160505-$ or US-3329261-$ or US-5364375-$ or US-4811847-$ or US-4925448-$).did. or (US-3542019-$ or US-2734543-$ or US-3485352-$ or US-3329261-$ or US-3166189-$).did.					
L192	910	L190 not L191	(US-PGPUB; USPAT; USOCR)	OR	OFF	OFF	2020/02/18 09:38 AM
L193	1590	L188 and (dip dipp$2 lubricat$3 jell$1 gell$1 jel gel fluid$1 liquid$1 saline water) near4 (catheter cannula canula) not (L191 L192)	(US-PGPUB; USPAT; USOCR)	OR	OFF	OFF	2020/02/18 10:13 AM
L194	10	L188 and (dip dipp$2 immers$3 apply$3 application cover$3) near4 (catheter cannula canula) with (lubricat$3 jell$1 gell$1 jel gel) not (L191 L192)	(US-PGPUB; USPAT; USOCR)	OR	OFF	OFF	2020/02/18 10:14 AM
L195	14	L187 and (dip dipp$2 immers$3 apply$3 application cover$3)	(US-PGPUB; USPAT; USOCR)	OR	OFF	OFF	2020/02/18 10:15 AM

Bard Exhibit 1004.0405

		near4 (catheter cannula canula) with (lubricat$3 jell$1 gell$1 jel gel) not (L191 L192 L194)					
L196	272	(dip dipp$2 immers$3 apply$3 application cover$3) near4 (catheter cannula canula) with (lubricat$3 jell$1 gell$1 jel gel) not (L191 L192 L194 L195)	(US-PGPUB; USPAT; USOCR)	OR	OFF	OFF	2020/02/18 10:18 AM
L197	98	L196 and @Ad<"20110607"	(US-PGPUB; USPAT; USOCR)	OR	OFF	OFF	2020/02/18 10:18 AM
L198	56	("3524690" "3886946" "3892314" "3993223" "4085845" "4135868" "4170300" "4226328" "4338930" "4405047" "4436205" "4466973" "4484577" "4502482" "4512475" "4523679" "4534342" "4573576" "4601713" "4632112" "4677978" "4696296" "4763791" "4767008" "4784267" "4811847" "5031768" "5108004" "5178282" "5311990" "5388570" "5392917" "5810738" "6012586" "6029422" "6164450" "6436085" "6533116" "6540078" "20040004019" "20040050721" "6736805" "20040187438" "20050081860" "6896141" "6907992" "6910581" "20050218022" "20050252805" "7293654" "20080110793" "7401703" "20080266840" "20090043270" "20090099531" "20130112589" "20150021221" "9295764" "9393353" "3680560" "3312221" "3346883" "3509879" "3537109" "3661144" "5792120" "4870975"	(US-PGPUB; USPAT; USOCR)	OR	OFF	OFF	2020/02/18 11:14 AM

Bard Exhibit 1004.0406

		"4811847" "6213124" "9808596" "4838851" "5181913" "4316462" "4954239" "3926309" "7789872" "5225160").pn. and @Ad<"20110607" not (L191 L192 L194 L195 L196 L197)					
L199	0	(11/974612).APP.	(USPAT; USOCR)	OR	OFF	OFF	2020/02/18 11:15 AM
L200	49	("3187888" "3315802" "3345988" "3478871" "3556294" "3566874" "3750875" "3847280" "3861395" "3898993" "3926309" "3934721" "3967728" "3978983" "4230115" "4269310" "4366901" "4379506" "4612340" "4754877" "4811847" "4813210" "4928830" "5001009" "5038766" "5217493" "5226530" "5242428" "5372592" "5454798" "5688459" "5895374" "6017577" "6046143" "6059107" "6090075" "6162487" "20010001443" "6409717" "6578709" "6602244" "6645483" "20040035743" "6719991" "6848574" "20050090785" "20050109648" "20050199521" "6948704" "20050278012" "6986868" "20060025726" "20060030826" "20060052757" "20060058777" "20060067974" "7066912" "20060142737" "20060163097" "20070078413" "20090130005" "20120240957" "20170080128" "9931350" "9943529" "9943614" "10039285" "10155788" "10220045" "10226550" "10227376"	(US-PGPUB; USPAT; USOCR)	OR	OFF	OFF	2020/02/18 11:15 AM

		"10370403" "10441595" "10076653" "6059107" "5620424" "20030018306" "5269770" "20070154621" "9078992" "20010051669" "7662146").pn. and @Ad<"20110607" not (L191 L192 L194 L195 L196 L197 L198)					
L201	15	("2346636" "2625264" "3166189" "3329261" "3345988" "4779727" "5226530" "5931303" "6634498" "20090099531" "9283352" "9522753" "9693756" "9795761" "9808400" "10106295" "3463141" "3058469" "3536069" "3095877" "3559646" "3345988" "5887437" "4338941" "4586506" "2884925" "4856504" "4915694" "4790810" "3018778" "3139886" "3845772" "4424054" "7886907" "4405323" "3753439" "6578709" "3796219").pn. and @Ad<"20110607" not (L191 L192 L194 L195 L196 L197 L198)	(US-PGPUB; USPAT; USOCR)	OR	OFF	OFF	2020/02/18 11:24 AM
L202	1460	(catheter cannula canula) and (lubricant lubricat$3 jell$1 gell$1 jel gel) near5 (trough dip dipp$2 immers$3 canal sluice trench valley basin depressed depression$1 sink furrow$2 impression)	(US-PGPUB; USPAT; USOCR)	OR	OFF	OFF	2020/02/18 11:42 AM
L203	124	L202 and (tray package packaging packaged enclos$3 envelop$3 bag wrap$1 wrapp$3 kit enclosure box) near4 (catheter cannula canula catheteri?ation catheteri?ing canulation cannulation cannuli?ation canuli?ation)	(US-PGPUB; USPAT; USOCR)	OR	OFF	OFF	2020/02/18 11:42 AM

Bard Exhibit 1004.0408

L204	4	(US-20060011501-$ or US-20090099531-$).did. or (US-4925448-$ or US-4928830-$).did.	(US-PGPUB; USPAT)	OR	OFF	OFF	2020/02/18 11:54 AM
L205	237	("10251812"|"20030000015"|"20050241986"|"20060000009"|"20070000020"|"20080000024"|"20080281254"|"20090000031"|"20090004055"|"20110000023"|"3770119"|"3901235"|"3965900"|"4269310"|"4334537"|"5242398"|"5931303"|"7789873"|"9795761"|"D636894"|"4811847"|"20040000005"|"20060000001"|"4140127"|"5810738"|"20110000028"|"20120000014"|"20140000011"|"3013656"|"3133635"|"4501363"|"9084593"|"9808400"|"D209641"|"D742028"|"D779082"|"D800337"|"20040180822"|"20090194453"|"3967728"|"4795441"|"4858821"|"7434687"|"8708999"|"20020000018"|"20030000003"|"20030000007"|"20030038475"|"2004000"|"20040000016"|"20040000019"|"20040000023"|"20050000002"|"20050000010"|"20050000022"|"20050000025"|"20050000028"|"2006000"|"20060000002"|"20060000008"|"20060000018"|"20060000026"|"20060000027"|"20060000264"|"20070000002"|"20070000006"|"20070000008"|"20070000009"|"20070000014"|"20070000016"|"20070000022"|"20070000029"|"20080000011"|"20080000022"|"20080000028"|"20080000121"|"20080283433"|"20090000007"|"20090000015"|"20090000018"|"20090000023"|"20100000027"|"20100000030"|"20100000031"|"20110000010"|"20110000015"|"20110000029"|"2659485"|"27152	(US-PGPUB; USPAT)	OR	OFF	OFF	2020/02/18 11:54 AM

Bard Exhibit 1004.0409

		96"|"2781611"|"288631 6"|"2947415"|"2954642" |"2959891"|"3107786"|" 3166189"|"3315802"|"3 329261"|"3379339"|"34 85352"|"3542019"|"372 6281"|"3851649"|"3976 195"|"3978983"|"39982 21"|"4011944"|"405328 0"|"4075782"|"4160505" |"4170300"|"4226328"|" 4266669"|"4282678"|"4 307539"|"4458705"|"45 23679"|"4530349"|"476 1008"|"4767008"|"4828 113"|"4844259"|"49918 77"|"5007535"|"502432 6"|"5031768"|"5094621" |"5163557"|"5170804"|" 5197885"|"5232369"|"5 244394"|"5312287"|"53 14339"|"5318543"|"532 4201"|"5339955"|"5392 918"|"5411437"|"54875 66"|"5665945"|"571377 8"|"5720502"|"5778574" |"5779053"|"5795213"|" 5820441"|"5827262"|"5 829790"|"5872262"|"59 41241"|"5947284"|"595 4369"|"5975295"|"6004 136"|"6012586"|"60681 21"|"6089943"|"614215 2"|"6158437"|"6159017" |"6330427"|"6361396"|" 6382212"|"6405863"|"6 454097"|"6579271"|"66 59506"|"6681933"|"676 9546"|"6793078"|"6840 379"|"6896141"|"69159 01"|"6926708"|"694874 2"|"7048120"|"7066328" |"7264869"|"7278987"|" 7401703"|"7624869"|"7 785312"|"8448786"|"86 28549"|"8631935"|"867 8190"|"9283352"|"9522 753"|"D218077"|"D2344 04"|"D237315"|"D23731 7"|"D242654"|"D243798 "|"D248871"|"D249362"| "D262995"|"D268130"|" D275886"|"D276462"|" D277508"|"D280663"|" D280933"|"D280993"|" D283051"|"D287760"|" D310896"|"D334973"|" D337830"|"D343687"|"					

		D351661"|"D380272"|" D387177"|"D387559"|" D442697"|"D450130"|" D450391"|"D495491"|" D530920"|"D547064"|" D549454"|"D557047"|" D561473"|"D563673"|" D579662"|"D590596"|" D596311"|"D609819"|" D612153"|"D638137"|" D662218"|"D688461"|" D708347"|"D708759"|" D720470"|"D720471").PN.					
L206	4	L204 not L205	(US-PGPUB; USPAT; USOCR)	OR	OFF	OFF	2020/02/18 11:55 AM
L207	15	(12/495148 12/647515 13/153265 13/153300 13/155026 13/860902 14/793455 15/684787 16/833575).app.	(US-PGPUB; USPAT; USOCR)	OR	ON	ON	2022/09/02 02:30 PM
L208	1394	(Medline).as. (Medline).aanm. (Jennifer near2 Tomes).in. (Sarah NEAR Dickinson).in. (Deborah NEAR Adler).in. (Jack NEAR Maze).in. (Alberto NEAR Savage).in. (Kenneth NEAR Chua).in. (Earl NEAR Wilson).in. (John NEAR Kutsch).in.	(US-PGPUB; USPAT; USOCR)	OR	ON	ON	2022/09/02 02:33 PM
L209	5824	(B65B11/00 A61B50/30 A61B50/33 A61M25/00 A61M25/002 A61B2050/3008 A61J2205/50 A61L2202/18 A61L2202/182 A61M5/002 A61M25/0017 A61M2209/06).cpc. AND @Ad<"20110131"	(US-PGPUB; USPAT; USOCR)	OR	OFF	OFF	2022/09/02 03:59 PM
L210	12	L208 AND ((tray kit compartment chamber) near3 (lubricat$3 lubricant jelly gel)).clm.	(USPAT)	OR	ON	ON	2022/09/02 04:00 PM
L211	3	("9,745,088" "9,808,596" "9,795,761").pn.	(US-PGPUB; USPAT; USOCR)	OR	ON	ON	2022/09/06 09:16 AM
L212	5	("7,278,987" "3,329,261" "3,166,189").pn.	(US-PGPUB; USPAT; USOCR)	OR	ON	ON	2022/09/06 09:30 AM

Bard Exhibit 1004.0411

L213	2	("2007229520").pn.	(FIT (AU, AP, AT, BE, BG, BR, BY, CA, CH, CN, CS, CU, CZ, DD, DE, DK, EA, EE, EP, ES, FI, FR, GB, HR, HU, ID, IE, IL, IS, IT, JP, KR, LT, LU, LV, MA, OA, RU, SU, WO, MC, MD, MY, NL, NO, NZ, PH, PL, PT, RO, RS, SE, SG, SI, SK, TH, TN, TR, TW, UA, VN, UA, VN, WO); JPO)	OR	ON	ON	2022/09/06 09:36 AM
L214	68	((US-3485352-A OR US-3830035-A OR US-3780857-A OR US-3750663-A OR US-3851649-A OR US-5447237-A OR US-4282972-A OR US-4226328-A OR US-6691946-B2 OR US-4170300-A OR US-4366901-A OR US-6012586-A OR US-4811847-A OR US-4925448-A OR US-4928830-A OR US-3978983-A OR US-6540078-B1 OR US-4085845-A OR US-3107786-A OR US-4523679-A OR US-5635134-A OR US-3750664-A OR US-3998221-A OR US-3225920-A OR US-5174306-A OR US-6142152-A OR US-3650393-A OR US-4051845-A OR US-5072832-A OR US-9745088-B2 OR US-11116937-B2).did. AND USPT.dbnm.) OR ((US-3542019-A OR US-2734543-A OR US-3166189-A).did. AND USOC.dbnm.) OR ((US-20080272023-A1 OR US-20070161971-A1 OR US-20040004019-A1 OR US-20170216558-A1 OR US-20030038475-A1 OR US-20060009742-A1 OR US-	(US-PGPUB; USPAT; USOCR; FIT (AU, AP, AT, BE, BG, BR, BY, CA, CH, CN, CS, CU, CZ, DD, DE, DK, EA, EE, EP, ES, FI, FR, GB, HR, HU, ID, IE, IL, IS, IT, JP, KR, LT, LU, LV, MA, OA, RU, SU, WO, MC, MD, MY, NL, NO, NZ, PH, PL, PT, RO, RS, SE, SG, SI, SK, TH, TN, TR, TW, UA, VN, UA, VN, WO); FPRS; EPO; JPO; DERWENT; IBM_TDB)	OR	ON	ON	2022/09/06 12:53 PM

Bard Exhibit 1004.0412

		20060025753-A1 OR US-20030159968-A1 OR US-20060011501-A1 OR US-20110284410-A1 OR US-20090099531-A1 OR US-20090236259-A1 OR US-20040055925-A1 OR US-20070026472-A1 OR US-20040076564-A1 OR US-20040074593-A1 OR US-20110192115-A1 OR US-20110033137-A1 OR US-20020185406-A1 OR US-20050022822-A1 OR US-20100186754-A1 OR US-20060104856-A1 OR US-20020064478-A1 OR US-20100252473-A1 OR US-20150034521-A1 OR US-20070095699-A1 OR US-20060185326-A1 OR US-20110214679-A1 OR US-20070225687-A1 OR US-20090152160-A1 OR US-20060067855-A1 OR US-20050079093-A1 OR US-20200223571-A1).did. AND PGPB.dbnm.) OR ((JP-2007229520-A).did. AND FTDB.dbnm.)					
L215	14	L214 AND (swab swabstick)	(US-PGPUB; USPAT; USOCR)	OR	ON	ON	2022/09/06 12:53 PM
L216	55	L209 AND (tray kit package compartment chamber zone box divider divided division subdivided subdivision) near3 (lubricat$3 lubricant jelly gel)	(USPAT)	OR	ON	ON	2022/09/06 03:37 PM
L217	278	("10640243"|"20040031721"|"20170202699"|"20170216558"|"20170368302"|"20190344044"|"5289919"|"10251812"|"20020000018"|"20030000003"|"20030000007"|"20030000015"|"20030038475"|"2004000"|"20	(US-PGPUB; USPAT; USOCR)	OR	ON	ON	2022/09/06 03:38 PM

Bard Exhibit 1004.0413

		040000005"|"20040000 016"|"20040000018"|"2 0040000019"|"2004000 0023"|"20050000002"|" 20050000010"|"200500 00022"|"20050000025"| "20050000028"|"20050 241986"|"2006000"|"20 060000001"|"20060000 002"|"20060000008"|"2 0060000009"|"2006000 0018"|"20060000026"|" 20060000027"|"200600 00264"|"20070000002"| "20070000006"|"20070 000008"|"20070000009 "|"20070000014"|"2007 0000016"|"2007000002 0"|"20070000022"|"200 70000029"|"200800000 11"|"20080000022"|"20 080000024"|"20080000 028"|"20080000121"|"2 0080281254"|"2008028 3433"|"20090000007"|" 20090000015"|"200900 00018"|"20090000019"| "20090000023"|"20090 000031"|"20090004055 "|"20090099531"|"2010 0000027"|"2010000003 0"|"20100000031"|"201 00307941"|"201003110 26"|"20110000010"|"20 110000015"|"20110000 023"|"20110000028"|"2 0110000029"|"2011023 3079"|"20110290260"|" 20110290262"|"201200 00014"|"20120145589"| "20140000011"|"26594 85"|"2715296"|"278161 1"|"2886316"|"2947415" |"2954642"|"2959891"|" 3013656"|"3133635"|"3 166189"|"3315802"|"33 29261"|"3379339"|"348 5352"|"3542019"|"3726 281"|"3770119"|"38516 49"|"3901235"|"396590 0"|"3967728"|"3976195" |"3978983"|"3998221"|" 4011944"|"4053280"|"4 075782"|"4140127"|"41 60505"|"4170300"|"422 6328"|"4266669"|"4269 310"|"4282678"|"43075 39"|"4334537"|"445870					

		5"|"4501363"|"4523679" |"4530349"|"4761008"|" 4767008"|"4795441"|"4 811847"|"4828113"|"48 44259"|"4858821"|"492 5448"|"4928830"|"4991 877"|"5007535"|"50243 26"|"5031768"|"509462 1"|"5163557"|"5170804" |"5197885"|"5232369"|" 5242398"|"5244394"|"5 312287"|"5314339"|"53 18543"|"5324201"|"533 9955"|"5392918"|"5411 437"|"5487566"|"56659 45"|"5713778"|"572050 2"|"5778574"|"5779053" |"5795213"|"5810738"|" 5820441"|"5827262"|"5 829790"|"5872262"|"59 31303"|"5941241"|"594 7284"|"5954369"|"5975 295"|"6004136"|"60125 86"|"6068121"|"608994 3"|"6142152"|"6158437" |"6159017"|"6330427"|" 6361396"|"6382212"|"6 405863"|"6454097"|"65 79271"|"6659506"|"668 1933"|"6769546"|"6793 078"|"6840379"|"68961 41"|"6915901"|"692670 8"|"6948742"|"7048120" |"7066328"|"7264869"|" 7278987"|"7401703"|"7 434687"|"7624869"|"77 85312"|"7789873"|"844 8786"|"8628549"|"8631 935"|"8678190"|"87089 99"|"9084593"|"928335 2"|"9522753"|"9795761" |"9808400"|"D209641"|" D218077"|"D234404"|" D237315"|"D237317"|" D242654"|"D243798"|" D248871"|"D249362"|" D262995"|"D268130"|" D275886"|"D276462"|" D277508"|"D280663"|" D280933"|"D280993"|" D283051"|"D287760"|" D310896"|"D334973"|" D337830"|"D343687"|" D351661"|"D380272"|" D387177"|"D387559"|" D442697"|"D450130"|" D450391"|"D495491"|" D530920"|"D547064"|				

		D549454"|"D557047"|" D561473"|"D563673"|" D579662"|"D590596"|" D596311"|"D609819"|" D612153"|"D623765"|" D636894"|"D638137"|" D650912"|"D662218"|" D688461"|"D704856"|" D708347"|"D708759"|" D720470"|"D720471"|" D742028"|"D779082"|" D800337"|"D832456").PN.					
L218	39	L217 AND (lubricat$3 lubricant jelly gel)	(USPAT)	OR	ON	ON	2022/09/06 03:38 PM
L219	2	(10/888659).APP.	(US-PGPUB; USPAT; USOCR)	OR	ON	ON	2022/09/06 03:47 PM
L220	79	("20060009742" "20060009742" "7278987" "20090050516" "7657953" "20110225726" "20120103840" "9283352" "9522753" "9693756" "9795761" "9808400" "10106295" "10758705" "10960260" "11116937" "8042689" "8382730" "9011563" "7866471" "8608719" "10029075" "2032593" "2563060" "2783109" "3166189" "3329261" "3532336" "3795015" "3851649" "4160505" "4226328" "4503864" "4595102" "4635913" "4752293" "4811847" "4925448" "5242398" "5339955" "5383411" "5438938" "5586163" "5697921" "5792125" "6012586" "6090075" "6485438" "20030056285" "20050205450" "2032593" "2563060" "2783109" "3166189" "3329261" "3532336" "3795015" "3851649" "4160505" "4226328" "4503864" "4752293" "4595102" "4635913" "4811847" "4925448" "5242398" "5339955" "5383411" "5438938"	(US-PGPUB; USPAT; USOCR)	OR	ON	ON	2022/09/06 03:49 PM

Bard Exhibit 1004.0416

		"5586163" "5697921" "5792125" "6012586" "6090075" "6485438" "20030056285" "20050205450" "8327480" "7657953" "7757317" "7798331" "20090050516" "9522753" "9693756" "9745088" "10512752" "9808596" "10251812" "9808400" "9283352" "10624614" "10946992" "9795761" "20180001052" "20180057196" "10946169" "10640243" "20110225726" "10106295" "20120103840" "8584849" "10758705" "10905848" "11116937" "10960260" "20060009742" "7278987" "10449328" "6007521" "8414562" "8317775" "6004305" "20090054876" "20090024111" "8491621" "20210162169").pn.					
L221	81	("5339955" "5441152" "5706991" "5772031" "5791472" "5848693" "6012586" "6089370" "6426041" "20030073155" "20030072686" "6634513" "20040144667" "6783976" "6929926" "20050247585" "20060009742" "6998250" "20060042977" "7008777" "20060096877" "20060118444" "7119689" "20060272979" "20080237084" "7441655" "20090050516" "7660724" "20100270442" "20100311026" "20100307941" "20110017621"	(US-PGPUB; USPAT; USOCR)	OR	OFF	OFF	2022/09/06 03:54 PM

Bard Exhibit 1004.0417

		"7970722" "20110203957" "8195328" "8448786" "8560460" "8628155" "20140069841" "8678190" "20150021221" "9168107" "9721064" "9795761" "10106295" "20190038829" "20190167375" "10350020" "10466143" "20200138536" "10758705" "11116937" "435108" "2659485" "2766919" "3133635" "3380573" "3437423" "3489268" "3601277" "3907111" "4153160" "4195734" "4655360" "5005590" "5024326" "5173273" "435108" "2659485" "2766919" "3133635" "3437423" "3380573" "3489268" "3601277" "3907111" "4655360" "4153160" "4195734" "5005590" "5024326" "5173273" "5441152" "5791472" "5772031" "5706991" "5848693" "6012586" "6634513" "6089370" "8005777" "8160988" "7970722" "6426041" "6998250" "6929926" "20030073155" "20030072686" "7008777" "6783976" "20040144667" "6902057" "7123150" "8868434" "8204620" "7126480" "7138918" "8296243" "8195328" "7119689" "7664656" "8355994" "8595021" "8560460" "7660724" "20050247585" "7278987" "20060009742" "20060042977" "8616215" "9168107" "9721064" "20060096877" "8556115" "20060118444" "7441655" "20060272979"					

		"20080237084" "7798331" "20090050516" "9745088" "9693756" "9522753" "7980517" "20110017621" "8453977" "20100270442" "20110203957" "20100307942" "9808400" "9808596" "8631935" "9283352" "10512752" "10251812" "8746452" "20140231288" "20140231287" "20100307941" "20100311026" "10640243" "8678190" "8448786" "10624614" "9795761" "10946992" "10946169" "8628155" "10106295" "20140014544" "9179975" "20140069841" "9198811" "10905515" "10111710" "9532847" "20150021221" "10905848" "10758705" "10350020" "10952805" "11284961" "10466143" "20190038829" "10478262" "20190167375" "11116937" "20200138536" "11219499" "5339955" "5353929" "4793483" "7036661" "5511674" "6827212" "7441655" "6896141" "4142632" "5201430" "5617952" "5971920" "5005590" "20060042977" "5848693" "5386908" "5097963" "5271500" "20070039845" "10835339" "5791472" "4321999" "20100270442" "20050205450").pn. AND @Ad<"20110131"					
L222	49	("3601277" "3894649" "3897885" "4013798" "4090275" "4160505" "4304330" "4718555" "5019124" "5335787"	(US-PGPUB; USPAT; USOCR)	OR	OFF	OFF	2022/09/06 04:09 PM

Bard Exhibit 1004.0419

		"5339955" "5368183" "5511653" "20060113204" "20060157377" "20060172043" "20070062965" "7225927" "20090092738" "20090090648" "20090089993" "20090092719" "20090091059" "20090090649" "20090200194" "20090200316" "20090200701" "20090200195" "20090200197" "20100181226" "1595356" "2738915" "3051346" "3197058" "3203573" "3353886" "1595356" "2738915" "3051346" "3203573" "3197058" "3353886" "3897885" "3894649" "4013798" "4090275" "4160505" "4304330" "4718555" "5019124" "5335787" "5339955" "5368183" "5511653" "5887749" "20060113204" "7225927" "20060157377" "20060172043" "20070062965" "7934449" "7736580" "7735651" "20090092719" "20090091059" "20090090649" "20090089993" "8006369" "20090092738" "7802684" "20090090648" "20090200194" "20090200197" "20100181226" "20090200195" "20090200701" "20090200316" "3601277" "3675811" "3366290" "3704779" "3401863" "3807622" "3955672" "3349943" "4787527" "3506154"					

		"3261494" "3720365" "4381847" "4736977" "3146885" "3786932" "4006818" "4278197" "2946621" "3765592" "2509447" "3931888").pn. AND @Ad<"20110131"					
L223	47	("4160505" "4266669" "4479762" "4573576" "4811847" "4936448" "4989733" "5098391" "5099839" "5454797" "5931303" "6405863" "20030072686" "20030073155" "20030082664" "6783976" "6929926" "20060009742" "6998250" "20060271017" "20070062965" "20080119803" "20090200196" "20090200197" "20090236259" "20120103840" "20130105344" "9283352" "9522753" "9693756" "9795761" "9808400" "10106295" "10758705" "11116937" "11399911" "2319556" "3329261" "3485352" "3601277" "3851649" "2319556" "3329261" "3485352" "3601277" "3851649" "4266669" "4479762" "4573576" "4811847" "5099839" "5356427" "4936448" "5098391" "4989733" "5454797" "5931303" "6405863" "20030082664" "20030073155" "20030072686" "6929926" "6998250" "7008777" "6783976" "20060009742" "7278987" "20080119803" "8852171" "20060271017" "7736348" "7934449" "20070062965" "9745088" "9693756" "9522753"	(US-PGPUB; USPAT; USOCR)	OR	OFF	OFF	2022/09/06 04:12 PM

Bard Exhibit 1004.0421

		"20090200196" "20090200197" "20090236259" "9283352" "10512752" "9808400" "9808596" "10251812" "10640243" "10624614" "10946992" "10946169" "9795761" "10106295" "20120103840" "8584849" "20130105344" "10758705" "10905848" "10405938" "11399911" "11116937" "4160505" "4190153" "4976726" "6012586" "5000741" "7665491" "3774609" "3851649" "4917112" "3650267" "3166189" "4988296" "5454797" "5683655" "8753355" "5361781").pn. AND @Ad<"20110131"					
L224	7	L209 AND (lubricant lubricating gel gell jel jell jelly) near3 syringe	(USPAT)	OR	ON	ON	2022/09/06 04:22 PM
L225	2	L207 AND (lubricant lubricating gel gell jel jell jelly) near3 syringe.clm.	(USPAT)	OR	ON	ON	2022/09/07 07:30 AM
L227	2	("3329261").pn.	(USPAT; USOCR)	OR	ON	ON	2022/09/07 07:43 AM
L228	461572	(B65B A61B A61J A61L A61M A61F).cpcl. AND @Ad<"20110131"	(US-PGPUB; USPAT; USOCR)	OR	OFF	OFF	2022/09/07 07:45 AM
L229	304	L228 AND (lubricant lubricating gel gell jel jell jelly) near3 syringe	(USPAT)	OR	ON	ON	2022/09/07 07:45 AM
L230	2	(12/763687).APP.	(US-PGPUB; USPAT; USOCR)	OR	ON	ON	2022/09/07 07:46 AM
L231	5	"9703710".pn.	(FIT (AU, AP, AT, BE, BG, BR, BY, CA, CH, CN, CS, CU, CZ, DD, DE, DK, EA, EE, EP, ES, FI, FR, GB, HR, HU, ID, IE, IL, IS, IT, JP, KR, LT, LU, LV, MA, OA, RU, SU, WO, MC, MD, MY, NL, NO, NZ, PH, PL, PT, RO, RS, SE, SG, SI, SK, TH, TN, TR, TW, UA, VN, UA, VN, WO); FPRS)	OR	ON	ON	2022/09/07 07:47 AM

Bard Exhibit 1004.0422

L232	5	L207 AND (tubing coil coiled catheter) near3 (opening through hole).clm.	(US-PGPUB; USPAT; USOCR)	OR	ON	ON	2022/09/07 11:14 AM
L233	0	L207 AND (third further extra) near3 (swab swabstick swabsticks).clm.	(US-PGPUB; USPAT; USOCR)	OR	ON	ON	2022/09/07 11:16 AM
L234	13	(16/944667 16/833575 15/684787 14/793455 13/860902 13/155026 12/647515 12/495148).app.	(US-PGPUB; USPAT; USOCR)	OR	ON	ON	2022/09/29 12:36 PM
L235	1401	(Medline).as. (Medline).aanm. (Jennifer near2 Tomes).in. (Sarah NEAR Dickinson).in. (Deborah NEAR Adler).in. (Jack NEAR Maze).in. (Alberto NEAR Savage).in. (Kenneth NEAR Chua).in. (Earl NEAR Wilson).in. (John NEAR Kutsch).in.	(US-PGPUB; USPAT; USOCR)	OR	ON	ON	2022/09/29 12:37 PM
L236	85	((US-3485352-A OR US-3830035-A OR US-3780857-A OR US-3750663-A OR US-3851649-A OR US-5447237-A OR US-4282972-A OR US-4226328-A OR US-6691946-B2 OR US-4170300-A OR US-4366901-A OR US-6012586-A OR US-4811847-A OR US-4925448-A OR US-4928830-A OR US-3978983-A OR US-6540078-B1 OR US-4085845-A OR US-3107786-A OR US-4523679-A OR US-5635134-A OR US-3750664-A OR US-5072832-A OR US-3225920-A OR US-5174306-A OR US-6142152-A OR US-3650393-A OR US-4051845-A OR US-3998221-A OR US-9745088-B2 OR US-9795761-B2 OR US-	(US-PGPUB; USPAT; USOCR)	OR	ON	ON	2022/09/29 12:40 PM

Bard Exhibit 1004.0423

		7278987-B2 OR US-5339955-A OR US-5706991-A OR US-3601277-A OR US-5887749-A OR US-4160505-A OR US-4503864-A OR US-5853749-A OR US-4554156-A OR US-11116937-B2).did. AND USPT.dbnm.) OR ((US-3542019-A OR US-2734543-A OR US-3166189-A OR US-3329261-A).did. AND USOC.dbnm.) OR ((US-20080272023-A1 OR US-20070161971-A1 OR US-20040004019-A1 OR US-20170216558-A1 OR US-20030038475-A1 OR US-20060009742-A1 OR US-20060025753-A1 OR US-20030159968-A1 OR US-20060011501-A1 OR US-20110284410-A1 OR US-20090099531-A1 OR US-20090236259-A1 OR US-20040055925-A1 OR US-20070026472-A1 OR US-20040076564-A1 OR US-20040074593-A1 OR US-20110192115-A1 OR US-20110033137-A1 OR US-20020185406-A1 OR US-20050022822-A1 OR US-20100186754-A1 OR US-20060104856-A1 OR US-20020064478-A1 OR US-20070225687-A1 OR US-20100252473-A1 OR US-20150034521-A1 OR US-20070095699-A1 OR US-20060185326-A1 OR US-20110214679-A1 OR US-20090152160-A1 OR US-20060067855-A1 OR US-20050079093-A1					

		OR US-20200223571-A1 OR US-20120103840-A1 OR US-20110225726-A1 OR US-20050205450-A1 OR US-20110017621-A1 OR US-20060096877-A1 OR US-20060042977-A1 OR US-20100272669-A1).did. AND PGPB.dbnm.) OR ((JP-2007229520-A).did. AND FTDB.dbnm.)					
L237	35	L235 AND (syringe near5 (lubricating lubricant jelly gel water) AND (compartment zone area chamber) AND (tubing tube coil coiled Foley catheter)).clm.	(US-PGPUB; USPAT)	OR	ON	ON	2022/09/29 02:31 PM
L238	15	L235 AND (syringe near5 (lubricating lubricant jelly gel water) AND (compartment zone area chamber) AND (tubing tube coil coiled Foley catheter)).clm.	(USPAT)	OR	ON	ON	2022/09/29 02:31 PM
L239	13	L238 AND (opening hole passage pass passed passing across through gap) near8 (tubing tube coil coiled Foley catheter barrier surface catheter).clm.	(USPAT)	OR	ON	ON	2022/09/29 02:34 PM
L240	5	(16/944667 16/833575 15/684787 14/793455 13/860902 13/155026 12/647515 12/495148).app.	(USPAT)	OR	ON	ON	2022/09/29 02:47 PM
L241	15	L238 AND (opening hole passage pass passed passing across through gap) near8 (tubing tube coil coiled Foley catheter barrier surface catheter compartment zone area chamber).clm.	(USPAT)	OR	ON	ON	2022/09/29 02:51 PM
L242	5824	(B65B11/00 A61B50/30 A61B50/33 A61M25/00 A61M25/002	(US-PGPUB; USPAT; USOCR)	OR	OFF	OFF	2022/09/29 03:19 PM

Bard Exhibit 1004.0425

		A61B2050/3008 A61J2205/50 A61L2202/18 A61L2202/182 A61M5/002 A61M25/0017 A61M2209/06).cpc. AND @Ad<"20110131"					
L271	22	L242 AND (tray kit package box assembly) SAME (compartment chamber zone divider divided division subdivided subdivision) near3 (lubricat$3 lubricant jelly gel)	(US-PGPUB; USPAT; USOCR)	OR	ON	ON	2022/09/30 10:49 AM
L272	12	L236 AND (water saline inflat$3) near4 syringe AND (Bag wrap wrapper wrapping packaging box pouch)	(US-PGPUB; USPAT; USOCR)	OR	ON	ON	2022/09/30 12:54 PM
L273	278	("10640243"|"20040031721"|"20170202699"|"20170216558"|"20170368302"|"20190344044"|"5289919"|"10251812"|"20020000018"|"20030000003"|"20030000007"|"20030000015"|"20030038475"|"2004000"|"20040000005"|"20040000016"|"20040000018"|"20040000019"|"20040000023"|"20050000002"|"20050000010"|"20050000022"|"20050000025"|"20050000028"|"20050241986"|"2006000"|"20060000001"|"20060000002"|"20060000008"|"20060000009"|"20060000018"|"20060000026"|"20060000027"|"20060000264"|"20070000002"|"20070000006"|"20070000008"|"20070000009"|"20070000014"|"20070000016"|"20070000020"|"20070000022"|"20070000029"|"20080000011"|"20080000022"|"20080000024"|"20080000028"|"20080000121"|"20080281254"|"20080283433"|"20090000007"|"20090000015"|"20090000018"|"20090000019"|	(US-PGPUB; USPAT; USOCR)	OR	OFF	OFF	2022/10/03 02:29 PM

Bard Exhibit 1004.0426

		"20090000023"|"20090 000031"|"20090004055 "|"20090099531"|"2010 0000027"|"2010000003 0"|"20100000031"|"201 00307941"|"201003110 26"|"20110000010"|"20 110000015"|"20110000 023"|"20110000028"|"2 0110000029"|"2011023 3079"|"20110290260"|" 20110290262"|"201200 00014"|"20120145589"| "20140000011"|"26594 85"|"2715296"|"278161 1"|"2886316"|"2947415" |"2954642"|"2959891"|" 3013656"|"3133635"|"3 166189"|"3315802"|"33 29261"|"3379339"|"348 5352"|"3542019"|"3726 281"|"3770119"|"38516 49"|"3901235"|"396590 0"|"3967728"|"3976195" |"3978983"|"3998221"|" 4011944"|"4053280"|"4 075782"|"4140127"|"41 60505"|"4170300"|"422 6328"|"4266669"|"4269 310"|"4282678"|"43075 39"|"4334537"|"445870 5"|"4501363"|"4523679" |"4530349"|"4761008"|" 4767008"|"4795441"|"4 811847"|"4828113"|"48 44259"|"4858821"|"492 5448"|"4928830"|"4991 877"|"5007535"|"50243 26"|"5031768"|"509462 1"|"5163557"|"5170804" |"5197885"|"5232369"|" 5242398"|"5244394"|"5 312287"|"5314339"|"53 18543"|"5324201"|"533 9955"|"5392918"|"5411 437"|"5487566"|"56659 45"|"5713778"|"572050 2"|"5778574"|"5779053" |"5795213"|"5810738"|" 5820441"|"5827262"|"5 829790"|"5872262"|"59 31303"|"5941241"|"594 7284"|"5954369"|"5975 295"|"6004136"|"60125 86"|"6068121"|"608994 3"|"6142152"|"6158437" |"6159017"|"6330427"|" 6361396"|"6382212"|"6				

		405863"|"6454097"|"65 79271"|"6659506"|"668 1933"|"6769546"|"6793 078"|"6840379"|"68961 41"|"6915901"|"692670 8"|"6948742"|"7048120" |"7066328"|"7264869"|" 7278987"|"7401703"|"7 434687"|"7624869"|"77 85312"|"7789873"|"844 8786"|"8628549"|"8631 935"|"8678190"|"87089 99"|"9084593"|"928335 2"|"9522753"|"9795761" |"9808400"|"D209641"|" D218077"|"D234404"|" D237315"|"D237317"|" D242654"|"D243798"|" D248871"|"D249362"|" D262995"|"D268130"|" D275886"|"D276462"|" D277508"|"D280663"|" D280933"|"D280993"|" D283051"|"D287760"|" D310896"|"D334973"|" D337830"|"D343687"|" D351661"|"D380272"|" D387177"|"D387559"|" D442697"|"D450130"|" D450391"|"D495491"|" D530920"|"D547064"|" D549454"|"D557047"|" D561473"|"D563673"|" D579662"|"D590596"|" D596311"|"D609819"|" D612153"|"D623765"|" D636894"|"D638137"|" D650912"|"D662218"|" D688461"|"D704856"|" D708347"|"D708759"|" D720470"|"D720471"|" D742028"|"D779082"|" D800337"|"D832456").P N.					

PE2E SEARCH - Search History (Interference)

Ref #	Hits	Search Query	DBs	Default Operator	Plurals	British Equivalents	Time Stamp
N207	10	((catheter cannula canula) and (lubricant lubricat$3 jell$1 gell$1 jel gel) near5 (trough dip dipp$2 immers$3 canal sluice trench valley basin depressed depression$1 sink	(US-PGPUB; USPAT)	OR	OFF	OFF	2020/02/18 11:45 AM

Bard Exhibit 1004.0428

		furrow$2 impression)).clm.					
N208	1892	(lubricant lubricat$3 jell$1 gell$1 jel gel) near5 (trough dip dipp$2 immers$3 canal sluice trench valley basin depressed depression$1 sink furrow$2 impression).clm. not N207	(US-PGPUB; USPAT)	OR	OFF	OFF	2020/02/18 11:45 AM
N209	0	N208 and (tray package packaging packaged enclos$3 envelop$3 bag wrap$1 wrapp$3 kit enclosure box) near4 (catheter cannula canula catheteri?ation catheteri?ing canulation cannulation cannuli?ation canuli?ation).clm.	(US-PGPUB; USPAT)	OR	OFF	OFF	2020/02/18 11:46 AM
N210	0	N208 and (catheter cannula canula catheteri?ation catheteri?ing canulation cannulation cannuli?ation canuli?ation).clm.	(US-PGPUB; USPAT)	OR	OFF	OFF	2020/02/18 11:46 AM
N211	4075	(tray package packaging packaged enclos$3 envelop$3 bag wrap$1 wrapp$3 kit enclosure box) near4 (catheter cannula canula catheteri?ation catheteri?ing canulation cannulation cannuli?ation canuli?ation).clm.	(US-PGPUB; USPAT)	OR	OFF	OFF	2020/02/18 11:47 AM
N212	35	N211 and (dip dipp$2 immers$3 apply$3 application cover$3) with (lubricat$3 lubricant$1 jell$1 gell$1 jel gel).clm.	(US-PGPUB; USPAT)	OR	OFF	OFF	2020/02/18 11:47 AM

UNITED STATES PATENT AND TRADEMARK OFFICE
COMMISSIONER FOR PATENTS
P.O.BOX 1450
ALEXANDRIA VA 22313-1451

PRESORTED
FIRST-CLASS MAIL
U.S. POSTAGE PAID
POSTEDIGITAL
NNNNN

Philip H. Burrus, IV
Burrus Intellectual Property Law Group LLC (MDL)
222 12th Street NE
Suite 1803
Atlanta, GA 30309

Courtesy Reminder for
Application Serial No: 16/944,667

Attorney Docket No:
10055UCIP2D1C1C1C1C1C1
Customer Number: 189038
Date of Electronic Notification: 10/07/2022

This is a courtesy reminder that new correspondence is available for this application. If you have not done so already, please review the correspondence. The official date of notification of the outgoing correspondence will be indicated on the form PTOL-90 accompanying the correspondence.

An email notification regarding the correspondence was sent to the following email address(es) associated with your customer number:
BIPLaw_docketing@burrusiplaw.com
pburrus@burrusiplaw.com

To view your correspondence online or update your email addresses, please visit us anytime at **https://ppair-my.uspto.gov/pair/PrivatePair.**
If you have any questions, please email the Electronic Business Center (EBC) at EBC@uspto.gov or call 1-866-217-9197.

PTO/SB/06 (09-11)
Approved for use through 1/31/2014. OMB 0651-0032
U.S. Patent and Trademark Office; U.S. DEPARTMENT OF COMMERCE
Under the Paperwork Reduction Act of 1995, no persons are required to respond to a collection of information unless it displays a valid OMB control number.

PATENT APPLICATION FEE DETERMINATION RECORD Substitute for Form PTO-875	Application or Docket Number 16/944,667	Filing Date 07/31/2020	☐ To be Mailed

ENTITY: ☑ LARGE ☐ SMALL ☐ MICRO

APPLICATION AS FILED - PART I

FOR	(Column 1) NUMBER FILED	(Column 2) NUMBER EXTRA		RATE ($)	FEE ($)
☐ BASIC FEE (37 CFR 1.16(a), (b), or (c))	N/A	N/A		N/A	
☐ SEARCH FEE (37 CFR 1.16(k), (i), or (m))	N/A	N/A		N/A	
☐ EXAMINATION FEE (37 CFR 1.16(o), (p), or (q))	N/A	N/A		N/A	
TOTAL CLAIMS (37 CFR 1.16(i))	minus 20 =	*		x $100 =	
INDEPENDENT CLAIMS (37 CFR 1.16(h))	minus 3 =	*		x $460 =	
☐ APPLICATION SIZE FEE (37 CFR 1.16(s))	If the specification and drawings exceed 100 sheets of paper, the application size fee due is $310 ($155 for small entity) for each additional 50 sheets or fraction thereof. See 35 U.S.C. 41(a)(1)(G) and 37 CFR 1.16(s).				
☐ MULTIPLE DEPENDENT CLAIM PRESENT (37 CFR 1.16(j))					
* If the difference in column 1 is less than zero, enter "0" in column 2.				TOTAL	

APPLICATION AS AMENDED - PART II

AMENDMENT		(Column 1) CLAIMS REMAINING AFTER AMENDMENT		(Column 2) HIGHEST NUMBER PREVIOUSLY PAID FOR	(Column 3) PRESENT EXTRA		RATE ($)	ADDITIONAL FEE ($)
	02/13/2023							
	Total (37 CFR 1.16(i))	* 22	Minus	** 20	= 2		x $100 =	200
	Independent (37 CFR 1.16(h))	* 4	Minus	*** 4	= 0		x $480 =	0
	☐ Application Size Fee (37 CFR 1.16(s))							
	☐ FIRST PRESENTATION OF MULTIPLE DEPENDENT CLAIM (37 CFR 1.16(j))							
							TOTAL ADD'L FEE	200

AMENDMENT		(Column 1) CLAIMS REMAINING AFTER AMENDMENT		(Column 2) HIGHEST NUMBER PREVIOUSLY PAID FOR	(Column 3) PRESENT EXTRA		RATE ($)	ADDITIONAL FEE ($)
	Total (37 CFR 1.16(i))	*	Minus	**	=		x $0 =	
	Independent (37 CFR 1.16(h))	*	Minus	***	=		x $0 =	
	☐ Application Size Fee (37 CFR 1.16(s))							
	☐ FIRST PRESENTATION OF MULTIPLE DEPENDENT CLAIM (37 CFR 1.16(j))							
							TOTAL ADD'L FEE	

* If the entry in column 1 is less than the entry in column 2, write "0" in column 3.	LIE
** If the "Highest Number Previously Paid For" IN THIS SPACE is less than 20, enter "20".	/NICOLE L NICHOLSON/
*** If the "Highest Number Previously Paid For" IN THIS SPACE is less than 3, enter "3".	
The "Highest Number Previously Paid For" (Total or Independent) is the highest number found in the appropriate box in column 1.	

This collection of information is required by 37 CFR 1.16. The information is required to obtain or retain a benefit by the public which is to file (and by the USPTO to process) an application. Confidentiality is governed by 35 U.S.C. 122 and 37 CFR 1.14. This collection is estimated to take 12 minutes to complete, including gathering, preparing, and submitting the completed application form to the USPTO. Time will vary depending upon the individual case. Any comments on the amount of time you require to complete this form and/or suggestions for reducing this burden, should be sent to the Chief Information Officer, U.S. Patent and Trademark Office, U.S. Department of Commerce, P.O. Box 1450, Alexandria, VA 22313-1450. DO NOT SEND FEES OR COMPLETED FORMS TO THIS ADDRESS. **SEND TO: Commissioner for Patents, P.O. Box 1450, Alexandria, VA 22313-1450.**

If you need assistance in completing the form, call 1-800-PTO-9199 and select option 2.

Doc Code: DIST.E.FILE **Document Description: Electronic Terminal Disclaimer - Filed**	PTO/SB/26 U.S. Patent and Trademark Office Department of Commerce

Electronic Petition Request	**TERMINAL DISCLAIMER TO OBVIATE A DOUBLE PATENTING REJECTION OVER A "PRIOR" PATENT**
Application Number	16944667
Filing Date	31-Jul-2020
First Named Inventor	Jennifer Tomes
Attorney Docket Number	10055UCIP2D1C1C1C1C1C1
Title of Invention	Catheter Tray, Packaging System, Instruction Insert, and Associated Methods

☒ Filing of terminal disclaimer does not obviate requirement for response under 37 CFR 1.111 to outstanding Office Action

☒ This electronic Terminal Disclaimer is not being used for a Joint Research Agreement.

Owner	Percent Interest
Medline Industries, LP	100%

The owner(s) with percent interest listed above in the instant application hereby disclaims, except as provided below, the terminal part of the statutory term of any patent granted on the instant application which would extend beyond the expiration date of the full statutory term of prior patent number(s)

10251812

9522753

9745088

10640243

10946992

9283352

9808596

10512752

as the term of said prior patent is presently shortened by any terminal disclaimer. The owner hereby agrees that any patent so granted on the instant application shall be enforceable only for and during such period that it and the prior patent are commonly owned. This agreement runs with any patent granted on the instant application and is binding upon the grantee, its successors or assigns.

In making the above disclaimer, the owner does not disclaim the terminal part of the term of any patent granted on the instant application that would extend to the expiration date of the full statutory term of the prior patent, "as the term of said prior patent is presently shortened by any terminal disclaimer," in the event that said prior patent later:
- expires for failure to pay a maintenance fee;
- is held unenforceable;
- is found invalid by a court of competent jurisdiction;
- is statutorily disclaimed in whole or terminally disclaimed under 37 CFR 1.321;
- has all claims canceled by a reexamination certificate;
- is reissued; or
- is in any manner terminated prior to the expiration of its full statutory term as presently shortened by any terminal disclaimer.

(●) Terminal disclaimer fee under 37 CFR 1.20(d) is included with Electronic Terminal Disclaimer request.

( ) I certify, in accordance with 37 CFR 1.4(d)(4), that the terminal disclaimer fee under 37 CFR 1.20(d) required for this terminal disclaimer has already been paid in the above-identified application.

Applicant claims the following fee status:

( ) Small Entity

( ) Micro Entity

(●) Regular Undiscounted

I hereby declare that all statements made herein of my own knowledge are true and that all statements made on information and belief are believed to be true; and further that these statements were made with the knowledge that willful false statements and the like so made are punishable by fine or imprisonment, or both, under Section 1001 of Title 18 of the United States Code and that such willful false statements may jeopardize the validity of the application or any patent issued thereon.

THIS PORTION MUST BE COMPLETED BY THE SIGNATORY OR SIGNATORIES

I certify, in accordance with 37 CFR 1.4(d)(4) that I am:

(●) An attorney or agent registered to practice before the Patent and Trademark Office who is of record in this application

Registration Number 45432

( ) A sole inventor

( ) A joint inventor; I certify that I am authorized to sign this submission on behalf of all of the inventors as evidenced by the power of attorney in the application

( ) A joint inventor; all of whom are signing this request

Signature	/Philip H. Burrus, IV/
Name	Philip H. Burrus, IV

*Statement under 37 CFR 3.73(b) is required if terminal disclaimer is signed by the assignee (owner).
Form PTO/SB/96 may be used for making this certification. See MPEP § 324.

Electronic Patent Application Fee Transmittal

Application Number:	16944667
Filing Date:	31-Jul-2020
Title of Invention:	Catheter Tray, Packaging System, Instruction Insert, and Associated Methods
First Named Inventor/Applicant Name:	Jennifer E. Tomes
Filer:	Philip Henry Burrus/Kayla Burrus
Attorney Docket Number:	10055UCIP2D1C1C1C1C1C1

Filed as Large Entity

Filing Fees for Utility under 35 USC 111(a)

Description	Fee Code	Quantity	Amount	Sub-Total in USD($)
Basic Filing:				
STATUTORY OR TERMINAL DISCLAIMER	1814	1	170	170
Pages:				
Claims:				
Miscellaneous-Filing:				
Petition:				
Patent-Appeals-and-Interference:				
Post-Allowance-and-Post-Issuance:				

Description	Fee Code	Quantity	Amount	Sub-Total in USD($)
Extension-of-Time:				
Miscellaneous:				
			Total in USD ($)	**170**

Doc Code: DISQ.E.FILE
Document Description: Electronic Terminal Disclaimer – Approved

Application No.: 16944667

Filing Date: 31-Jul-2020

Applicant/Patent under Reexamination: Tomes

Electronic Terminal Disclaimer filed on February 13, 2023

☒ APPROVED

This patent is subject to a terminal disclaimer

☐ DISAPPROVED

Approved/Disapproved by: Electronic Terminal Disclaimer automatically approved by EFS-Web

U.S. Patent and Trademark Office

Electronic Acknowledgement Receipt	
EFS ID:	47517416
Application Number:	16944667
International Application Number:	
Confirmation Number:	8322
Title of Invention:	Catheter Tray, Packaging System, Instruction Insert, and Associated Methods
First Named Inventor/Applicant Name:	Jennifer E. Tomes
Customer Number:	189038
Filer:	Philip Henry Burrus/Kayla Burrus
Filer Authorized By:	Philip Henry Burrus
Attorney Docket Number:	10055UCIP2D1C1C1C1C1C1
Receipt Date:	13-FEB-2023
Filing Date:	31-JUL-2020
Time Stamp:	16:03:56
Application Type:	Utility under 35 USC 111(a)

Payment information:

Submitted with Payment	yes
Payment Type	CARD
Payment was successfully received in RAM	$170
RAM confirmation Number	E20232CG03538693
Deposit Account	
Authorized User	
The Director of the USPTO is hereby authorized to charge indicated fees and credit any overpayment as follows:	

File Listing:

Document Number	Document Description	File Name	File Size(Bytes)/ Message Digest	Multi Part /.zip	Pages (if appl.)
1	Terminal Disclaimer-Filed (Electronic)	eTerminal-Disclaimer.pdf	44145 b7209ee0a0561cedd730c66d3924857cdd5897bc	no	3
Warnings:					
Information:					
2	Fee Worksheet (SB06)	fee-info.pdf	38258 bdd817e90564a5008906df821d9915807b3077ad	no	2
Warnings:					
Information:					
		Total Files Size (in bytes):	82403		

This Acknowledgement Receipt evidences receipt on the noted date by the USPTO of the indicated documents, characterized by the applicant, and including page counts, where applicable. It serves as evidence of receipt similar to a Post Card, as described in MPEP 503.

New Applications Under 35 U.S.C. 111
If a new application is being filed and the application includes the necessary components for a filing date (see 37 CFR 1.53(b)-(d) and MPEP 506), a Filing Receipt (37 CFR 1.54) will be issued in due course and the date shown on this Acknowledgement Receipt will establish the filing date of the application.
National Stage of an International Application under 35 U.S.C. 371
If a timely submission to enter the national stage of an international application is compliant with the conditions of 35 U.S.C. 371 and other applicable requirements a Form PCT/DO/EO/903 indicating acceptance of the application as a national stage submission under 35 U.S.C. 371 will be issued in addition to the Filing Receipt, in due course.
New International Application Filed with the USPTO as a Receiving Office
If a new international application is being filed and the international application includes the necessary components for an international filing date (see PCT Article 11 and MPEP 1810), a Notification of the International Application Number and of the International Filing Date (Form PCT/RO/105) will be issued in due course, subject to prescriptions concerning national security, and the date shown on this Acknowledgement Receipt will establish the international filing date of the application.

IN THE UNITED STATES PATENT AND TRADEMARK OFFICE

Serial No:	16/944,667
Examiner:	Marcetich, Adam M.
Art Group:	3781
Reference No.:	BPMDL0005JT CIP2 D1 C1 C1 C1 C1 C1
	(10055U CIP2 D1 C1 C1 C1 C1 C1)
Appn. Filed:	July 30, 2020
First Inventor:	Tomes, Jennifer E.

Title: Catheter Tray, Packaging System, Instruction Insert, and Associated Methods

February 9, 2023

Commissioner for Patents
P.O. Box 1450
Alexandria, Virginia 22313-1450

This paper is in response to an Office Action mailed October 7, 2022, a response thereto being due on or before January 7, 2022. In view of the remarks herein, Applicants respectfully request reconsideration of the above-identified patent application.

Bard Exhibit 1004.0440

CLAIMS:

Listing of the Claims:

1. (Currently Amended) A medical procedure kit, comprising:

a single layer tray having a first compartment for receiving one or more syringes and a second compartment for receiving a medical assembly, the second compartment bounded by a surface defining an opening allowing access to the second compartment from the top of the single layer tray;

a first syringe and a second syringe disposed within the single layer tray in accordance with an order with which the first syringe and the second syringe are removed from the single layer tray ~~of their use~~ during a catheterization procedure;

at least a portion of the medical assembly ~~dispowed~~ disposed within the second compartment, wherein the medical assembly comprises a coiled tubing coupled between a fluid drain bag and a Foley catheter ~~cathether~~; and

an outer packaging disposed about the single layer tray;

wherein:

one of the first syringe or the second syringe contains lubricating jelly;

another of the first syringe or the second syringe contains water; and

the first compartment defines one or more contours for accommodating one or more of the first syringe or the second syringe.

2. (Currently Amended) The medical procedure kit of claim 1, wherein the single layer tray defines a lubricating jelly application chamber and ~~one of~~ the first syringe ~~or the second syringe comprises the first syringe and the first syringe~~ contains the lubricating jelly and is situated in the lubricating jelly application chamber.
3. (Previously Presented) The medical procedure kit of claim 2, wherein the second syringe contains the water.
4. (Currently Amended) The medical procedure kit of claim 3, wherein the second syringe is attachable to the Foley catheter ~~disposed in the same compartment~~.
5. (Original) The medical procedure kit of claim 3, wherein the first compartment is adjacent to, and separated by a wall from, the second compartment.
6. (Currently Amended) The medical procedure kit of claim 5, wherein the lubricating jelly is configured to lubricate at least a portion of the medical assembly when the lubricating jelly is dispensed into the single layer tray and the portion of the medical assembly is passed into the lubricating jelly.
7. (Currently Amended) The medical procedure kit of claim [[6]] 1, wherein the first syringe, the second syringe, and the medical assembly are arranged within ~~further comprising one or more swabsticks disposed within~~ the single layer tray in a left-to-right usage configuration.
8. (Currently Amended) A medical procedure kit, comprising

   a single layer tray comprising a first compartment [[and]] defining a lubricating jelly application chamber and a second compartment separated

from the first compartment by a wall~~, with an opening allowing access to the lubricating jelly application chamber~~;

a container of lubricating jelly disposed within the single layer tray;

a coiled tubing coupled between a fluid drain bag and a Foley catheter;

at least one layer of wrap material enclosing the single layer tray within one or more folds of the at least one layer of wrap material; and

an outer packaging disposed about both the single layer tray and the at least one layer of wrap material;

wherein:

the coiled tubing, the fluid drain bag, and the Foley catheter are disposed within the medical procedure kit; and

the lubricating jelly application chamber is configured to receive lubricating jelly from the container of lubricating jelly for lubricating at least a portion of the Foley catheter with the lubricating jelly.

9. (Currently Amended) The medical procedure kit of claim 8, wherein the lubricating jelly application chamber is configured to apply the lubricating jelly to the portion of the Foley catheter when the portion of the Foley catheter is passed ~~through the opening~~ into the lubricating jelly application chamber.

10. (Currently Amended) The medical procedure kit of claim 9, further comprising one or more swabsticks disposed within the single layer tray.

11. (Currently Amended) The medical procedure kit of claim [[10]] 9, further comprising a container of water.

12. (Currently Amended) The medical procedure kit of claim 11, wherein the container of water and the container of water are arranged in accordance with an order with which they are drawn out of the single layer tray ~~contains sterile water~~.

13. (Currently Amended) The medical procedure kit of claim 11, wherein the [[first]] second compartment is adjacent to the lubricating jelly application chamber.

14. (Currently Amended) A medical procedure kit, comprising:

a single layer tray having a first compartment, a second compartment, and a third compartment, the first compartment being separated ~~sepearated~~ from the second compartment by a wall;

a first syringe and a second syringe disposed within the single layer tray;

a Foley catheter coupled to a fluid drain bag via a coiled tubing, the Foley catheter disposed within the second compartment of the single layer tray; and

one or more swabsticks disposed within the third compartment;

wherein:

a compartment of the single layer tray defines a lubricating jelly application chamber configured to lubricate at least a portion of the Foley catheter; [[and]]

~~the tray defines an opening through which~~ one or more of the Foley catheter or the coiled tubing can be passed into the lubricating jelly application chamber to lubricate [[to]] the portion of the Foley catheter; and

the second syringe is attachable to the Foley catheter during a Foley catheterization procedure.

15. (Currently Amended) The medical procedure kit of claim 14, wherein the first syringe and the second syringe are arranged in accordance with an order with which they are removed from the ~~tray comprising a~~ single layer tray.

16. (Previously Presented) The medical procedure kit of claim 15, the one or more swabsticks comprising a plurality of swabsticks.

17. (Canceled)

18. (Original) The medical procedure kit of claim 14, wherein the first compartment and the second compartment are adjacent.

19. (Original) The medical procedure kit of claim 18, further comprising a wall separating the first compartment from the second compartment.

20. (Original) The medical procedure kit of claim 19, the first compartment comprising one or more contours for accommodating flanges of one or more of the first syringe or the second syringe.

21. (Currently Amended) A Foley catheter kit, comprising:

a surface defining a single layer tray comprising at least two compartments at least partially separated by a barrier, the at least two compartments being open via a top opening of the single layer tray;

a first syringe disposed in a first compartment of the at least two compartments;

a second syringe disposed within the single layer tray;

a Foley catheter coupled to a coiled tubing and a fluid drain bag, with the Foley catheter being disposed within a second compartment of the at least two compartments;

the first compartment ~~surface~~ defining a lubricating jelly application chamber configured to lubricate at least a portion of the Foley catheter when the portion of the Foley catheter is passed ~~through an opening defined by a barrier bounding the lubricating jelly application chamber~~ into the lubricating jelly application chamber;

one or more swabsticks disposed in a third compartment defined by the surface of the single layer tray; and

a wrap folded about the single layer tray.

22. (New) The medical procedure kit of claim 8, wherein the container of lubricating jelly comprises a syringe of lubricating jelly.

23. (New) The medical procedure kit of claim 11, wherein the container of water comprises a syringe of water.

REMARKS – General

Claim Amendments:

Claims 1, 6, 8, 10, 14, and 21 have been amended with support found in claim 15 as previously pending. Claim 1 has also been amended with support found in the specification at paragraph [0116]. Claim 14 has also been amended with support found in the figures at FIG. 15, element 1508, as has claim 4.

Claim 2 has been amended with support found in claim 8 as previously pending. Claim 7 has been amended with support found in the specification at paragraph [046]. Claims 12 and 15 have been amended with support found in the specification at paragraph [0116]. Claim 21 has been amended with support found in the specification at paragraph [0156]. New claims 22 and 23 have been added with support found in the specification at paragraph [043].

Claim Objections:

The Office Action objects to claim 1 due to two typographical errors which have been corrected by amendment. Reconsideration of the objections is respectfully requested.

The Office Action also suggests that claim 1 lacked a period. Respectfully, after reviewing the Preliminary Amendment filed June 22, 2021, Applicant respectfully submits the period is indeed there, as it was not struck through in that paper. Accordingly, it has not been added here to avoid duplication. Should the Examiner believe the period to still be missing, he is respectfully requested to contact the undersigned attorney so that a supplemental amendment adding the same can be promptly filed. Reconsideration of the objection is respectfully requested.

The Office Action objects to claim 14 for a typographical error and two minor stylistic changes. Each has been corrected by amendment. Reconsideration of the objections is respectfully requested.

The Office Action objects to claim 21 due to a stylistic change, which has been made by amendment. Reconsideration of the objection is respectfully requested.

Claim Rejections under 35 USC §112:

The Office Action rejects claims 2, 4, 8, and 13 as being indefinite. While Applicant respectfully traverses the rejections, solely in an effort to expedite prosecution Applicant has amended claim 2 and 4 to delete the offending phrases and to replace the same with other limitations that more particularly recite features of the claimed invention. Claims 8 and 13 have been amended as suggested by the Examiner. Reconsideration of the rejections is respectfully requested.

Double Patenting:

Claims 1-21 are rejected under the judicially created, non-statutory, obviousness-type double patenting doctrine in view of commonly assigned US Pat. No. 10,251,812 to Tomes combined with Serany, US Pat. No. 3,329,261.

Claims 1-16 and 18-21 are rejected under the judicially created, non-statutory, obviousness-type double patenting doctrine in view of commonly assigned US Pat. No. 9,522,753 to Tomes combined with Serany.

Claims 1-13 are rejected under the judicially created, non-statutory, obviousness-type double patenting doctrine in view of commonly assigned US Pat. No. 9,745,088 to Tomes combined with Serany.

Claims 1-13 are rejected under the judicially created, non-statutory, obviousness-type double patenting doctrine in view of commonly assigned US Pat. No. 10,640,243 to Tomes combined with Serany.

Claims 8-13, 14-16, 18-19, and 21 are rejected under the judicially created, non-statutory, obviousness-type double patenting doctrine in view of commonly assigned US Pat. No. 10,946,992 to Tomes.

Claims 1-16 and 18-21 are rejected under the judicially created, non-statutory, obviousness-type double patenting doctrine in view of commonly assigned US Pat. No. 9,283,352 to Tomes combined with Serany.

Claims 1 and 8 are rejected under the judicially created, non-statutory, obviousness-type double patenting doctrine in view of commonly assigned US Pat. No. 9,808,596 to Tomes combined with Serany.

Claims 1, 8, 14, and 21 are rejected under the judicially created, non-statutory, obviousness-type double patenting doctrine in view of commonly assigned US Pat. No. 10,512,752 to Tomes.

As noted by the Office Action at page four, a timely filed terminal disclaimer in compliance with 37 CFR §§1.321(c) or (d) will obviate these rejections. Applicant includes herewith eight such terminal disclaimers, along with the appropriate fee. Reconsideration of the rejections is respectfully requested.

CONCLUSION

For the above reasons, Applicant believes the specification and claims are now in proper form, and that the claims all define patentably over the prior art. Applicant believes this application is now in condition for allowance, for which it respectfully submits.

Respectfully submitted,

Philip H. Burrus, IV
Attorney for Applicant
Registration No.: 45,432
404-797-8111
404-880-9912 (fax)
pburrus@burrusiplaw.com

IN THE UNITED STATES PATENT AND TRADEMARK OFFICE

Serial No:	16/944,667
Examiner:	Marcetich, Adam M.
Art Group:	3781
Reference No.:	BPMDL0005JT CIP2 D1 C1 C1 C1 C1 C1
	(10055U CIP2 D1 C1 C1 C1 C1 C1)
Appn. Filed:	July 30, 2020
First Inventor:	Tomes, Jennifer E.

Title:	Catheter Tray, Packaging System, Instruction Insert, and Associated Methods

February 9, 2023

Commissioner for Patents
P.O. Box 1450
Alexandria, Virginia 22313-1450

Petition for Extension of Time for Response

Applicant hereby respectfully requests an extension of time for response. The appropriate fee is included herewith. The Director is hereby authorized to debit any underpayments or credit any overpayments to Deposit Account No. 50-3608.

Respectfully submitted,

Philip H. Burrus, IV
Attorney for Applicant
Registration No.: 45,432
404-797-8111

Electronic Patent Application Fee Transmittal

Application Number:	16944667
Filing Date:	31-Jul-2020
Title of Invention:	Catheter Tray, Packaging System, Instruction Insert, and Associated Methods
First Named Inventor/Applicant Name:	Jennifer E. Tomes
Filer:	Philip Henry Burrus/Kayla Burrus
Attorney Docket Number:	10055UCIP2D1C1C1C1C1C1

Filed as Large Entity

Filing Fees for Utility under 35 USC 111(a)

Description	Fee Code	Quantity	Amount	Sub-Total in USD($)
Basic Filing:				
Pages:				
Claims:				
CLAIMS IN EXCESS OF 20	1202	2	100	200
Miscellaneous-Filing:				
Petition:				
Patent-Appeals-and-Interference:				
Post-Allowance-and-Post-Issuance:				

Description	Fee Code	Quantity	Amount	Sub-Total in USD($)
Extension-of-Time:				
Extension - 2 months with $0 paid	1252	1	640	640
Miscellaneous:				
		Total in USD ($)		**840**

Electronic Acknowledgement Receipt	
EFS ID:	47517477
Application Number:	16944667
International Application Number:	
Confirmation Number:	8322
Title of Invention:	Catheter Tray, Packaging System, Instruction Insert, and Associated Methods
First Named Inventor/Applicant Name:	Jennifer E. Tomes
Customer Number:	189038
Filer:	Philip Henry Burrus/Kayla Burrus
Filer Authorized By:	Philip Henry Burrus
Attorney Docket Number:	10055UCIP2D1C1C1C1C1C1
Receipt Date:	13-FEB-2023
Filing Date:	31-JUL-2020
Time Stamp:	16:12:49
Application Type:	Utility under 35 USC 111(a)

Payment information:

Submitted with Payment	yes
Payment Type	CARD
Payment was successfully received in RAM	$840
RAM confirmation Number	E20232CG13085300
Deposit Account	
Authorized User	
The Director of the USPTO is hereby authorized to charge indicated fees and credit any overpayment as follows:	

File Listing:

Document Number	Document Description	File Name	File Size(Bytes)/ Message Digest	Multi Part /.zip	Pages (if appl.)
1		10055U_CIP2_D1C1C1C1C1C1_USA_2023-2-13_Amend.pdf	248220 89491bef851a6f45a020bd5e0d09c0b2f4c0cb93	yes	12
	Multipart Description/PDF files in .zip description				
	Document Description		**Start**	**End**	
	Amendment/Request for Reconsideration-After Non-Final Rejection		1	1	
	Claims		2	7	
	Applicant Arguments/Remarks Made in an Amendment		8	11	
	Extension of Time		12	12	
Warnings:					
Information:					
2	Fee Worksheet (SB06)	fee-info.pdf	40737 f84e7629b4babb3292b8c271a5e415e4b318eb8b	no	2
Warnings:					
Information:					
		Total Files Size (in bytes):	288957		

This Acknowledgement Receipt evidences receipt on the noted date by the USPTO of the indicated documents, characterized by the applicant, and including page counts, where applicable. It serves as evidence of receipt similar to a Post Card, as described in MPEP 503.

New Applications Under 35 U.S.C. 111
If a new application is being filed and the application includes the necessary components for a filing date (see 37 CFR 1.53(b)-(d) and MPEP 506), a Filing Receipt (37 CFR 1.54) will be issued in due course and the date shown on this Acknowledgement Receipt will establish the filing date of the application.
National Stage of an International Application under 35 U.S.C. 371
If a timely submission to enter the national stage of an international application is compliant with the conditions of 35 U.S.C. 371 and other applicable requirements a Form PCT/DO/EO/903 indicating acceptance of the application as a national stage submission under 35 U.S.C. 371 will be issued in addition to the Filing Receipt, in due course.
New International Application Filed with the USPTO as a Receiving Office
If a new international application is being filed and the international application includes the necessary components for an international filing date (see PCT Article 11 and MPEP 1810), a Notification of the International Application Number and of the International Filing Date (Form PCT/RO/105) will be issued in due course, subject to prescriptions concerning national security, and the date shown on this Acknowledgement Receipt will establish the international filing date of the application.

EXHIBIT 5

US007278987B2

(12) **United States Patent**
Solazzo

(10) **Patent No.: US 7,278,987 B2**
(45) **Date of Patent: Oct. 9, 2007**

(54) **ERGONOMIC UROLOGICAL CATHETERIZATION/IRRIGATION TRAY**

(76) Inventor: **Anthony Solazzo**, 100 Acorn Rd., Watchung, NJ (US) 07069

(*) Notice: Subject to any disclaimer, the term of this patent is extended or adjusted under 35 U.S.C. 154(b) by 11 days.

(21) Appl. No.: **10/888,659**

(22) Filed: **Jul. 9, 2004**

(65) **Prior Publication Data**

US 2006/0009742 A1 Jan. 12, 2006

(51) **Int. Cl.**

A61B 19/00	(2006.01)
A61M 1/00	(2006.01)
B65D 69/00	(2006.01)
E03C 1/01	(2006.01)
A61M 29/00	(2006.01)

(52) **U.S. Cl.** **604/356**; 206/571; 604/319; 4/640

(58) **Field of Classification Search** 604/356, 604/317, 319, 326; 206/571; 4/640, 650, 4/660

See application file for complete search history.

(56) **References Cited**

U.S. PATENT DOCUMENTS

2,032,593	A *	3/1936	Rice	108/18
2,563,060	A *	8/1951	O'Neill	108/6
2,783,109	A *	2/1957	Frey	108/43
3,166,189	A *	1/1965	Disston	206/364
3,329,261	A *	7/1967	Serany, Jr. et al.	206/229
3,532,336	A *	10/1970	Baker	5/650
3,795,015	A *	3/1974	Talge et al.	4/420.3
3,851,649	A	12/1974	Villari	
4,160,505	A	7/1979	Rauschenberger	
4,226,328	A *	10/1980	Beddow	206/364
4,503,864	A *	3/1985	Powers	600/573
4,595,102	A *	6/1986	Cianci et al.	206/572
4,635,913	A *	1/1987	Rothman	5/658
4,752,293	A *	6/1988	Smith	604/322
4,811,847	A	3/1989	Reif	
4,925,448	A *	5/1990	Bazaral	604/171
5,242,398	A	9/1993	Knoll	
5,339,955	A *	8/1994	Horan et al.	206/370
5,383,411	A *	1/1995	Tomaka et al.	108/129
5,438,938	A *	8/1995	Meeker et al.	108/91
5,586,163	A *	12/1996	Goldstein	378/204
5,697,921	A *	12/1997	Blair	604/317
5,792,125	A *	8/1998	Webb	604/317
6,012,586	A *	1/2000	Misra	206/571
6,090,075	A	7/2000	House	
6,485,438	B1 *	11/2002	Minue	600/573
2003/0056285	A1 *	3/2003	Pollastri et al.	4/574.1
2005/0205450	A1 *	9/2005	Leitch	206/438

* cited by examiner

Primary Examiner—Tatyana Zalukaeva
Assistant Examiner—Paula L. Craig
(74) *Attorney, Agent, or Firm*—Kenneth P. Glynn, Esq.

(57) **ABSTRACT**

The present invention relates to an ergonomic urological catheterization/irrigation tray. The tray includes a tray structure having a recessed area that includes at least a bottom, opposite side walls, a front and a back, wherein the front has a first width of a predetermined dimension and the back has a second width of a predetermined dimension less then the first width, such that the recessed area is wider at the front than it is at the back. The recessed area has at least one drain located at a lower area thereof. The tray further includes a top flange extending at least outwardly each of the opposite side walls, wherein a user may rest the flange on front upper portions of legs when in a supine position, for urinary bladder evacuation into the tray. Surgical kits contain the aforementioned tray and specified components.

16 Claims, 8 Drawing Sheets

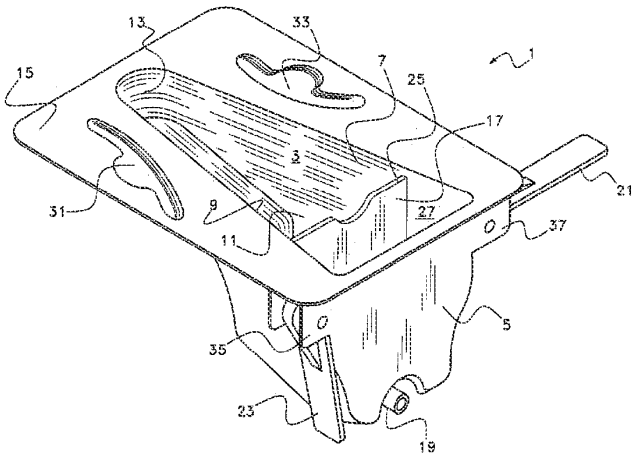

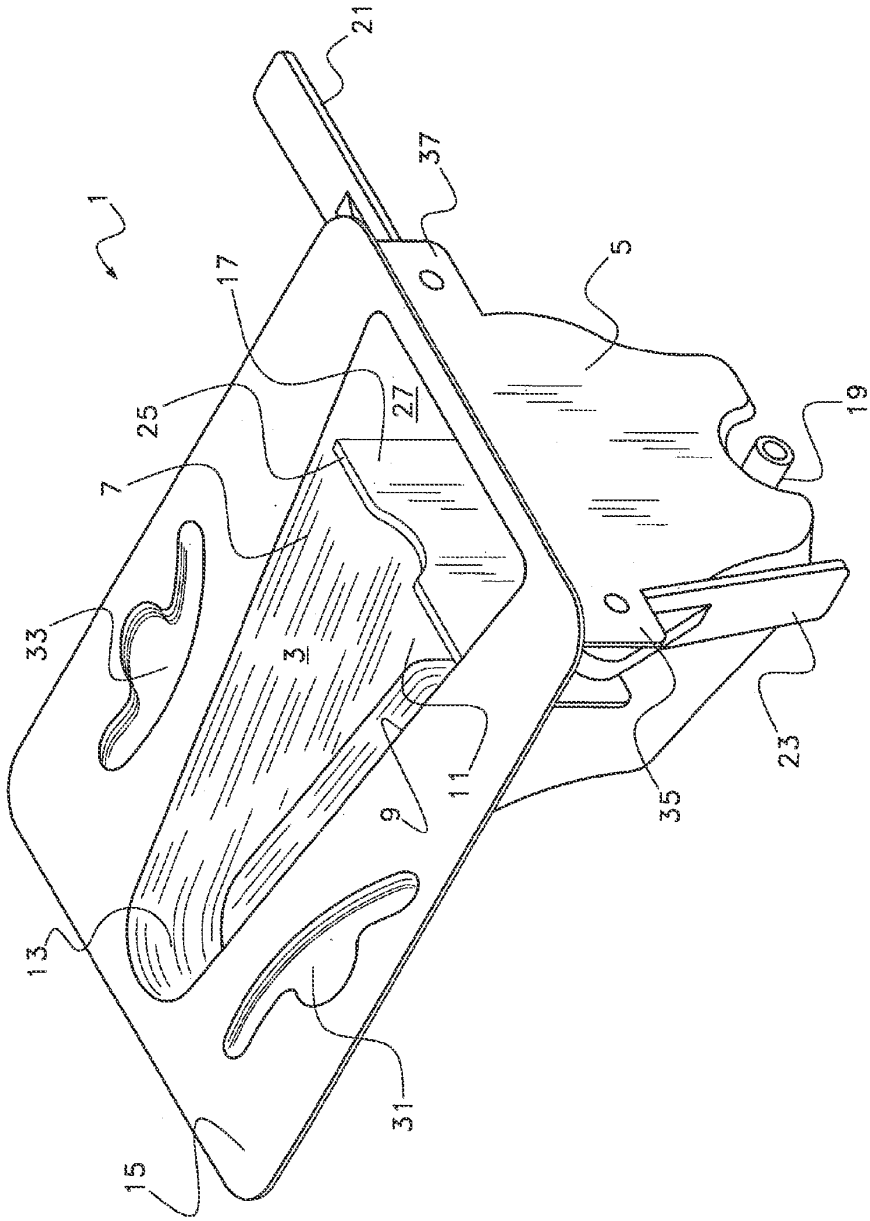

Fig. 1

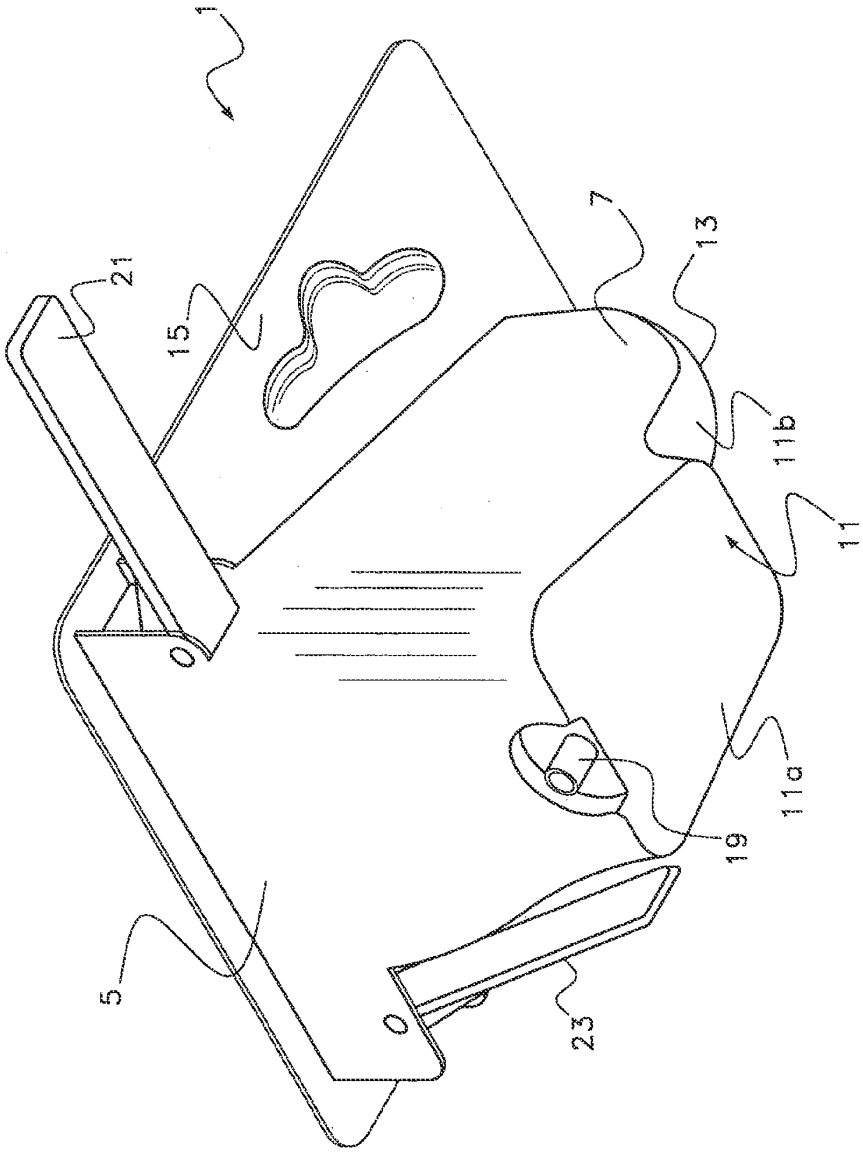

Fig. 2

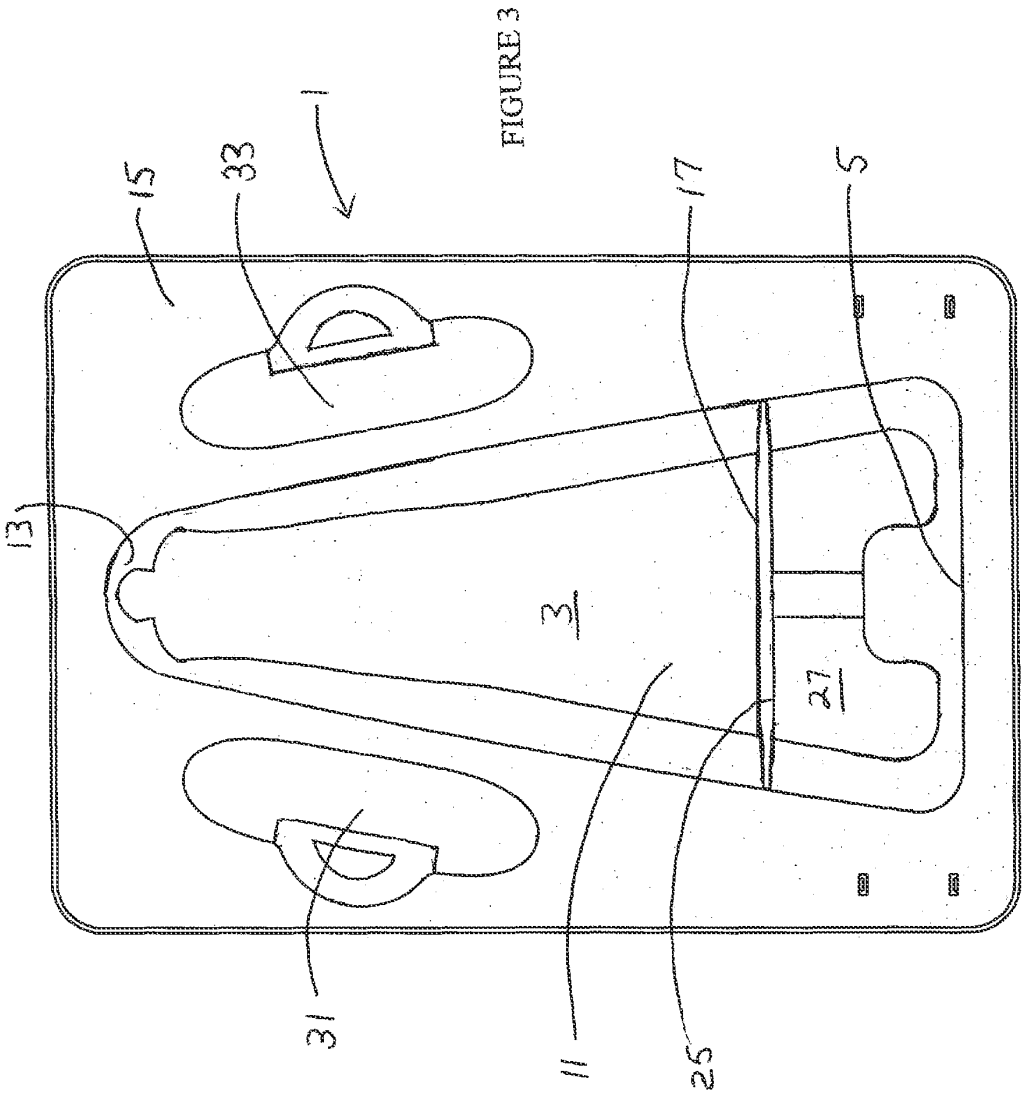

FIGURE 3

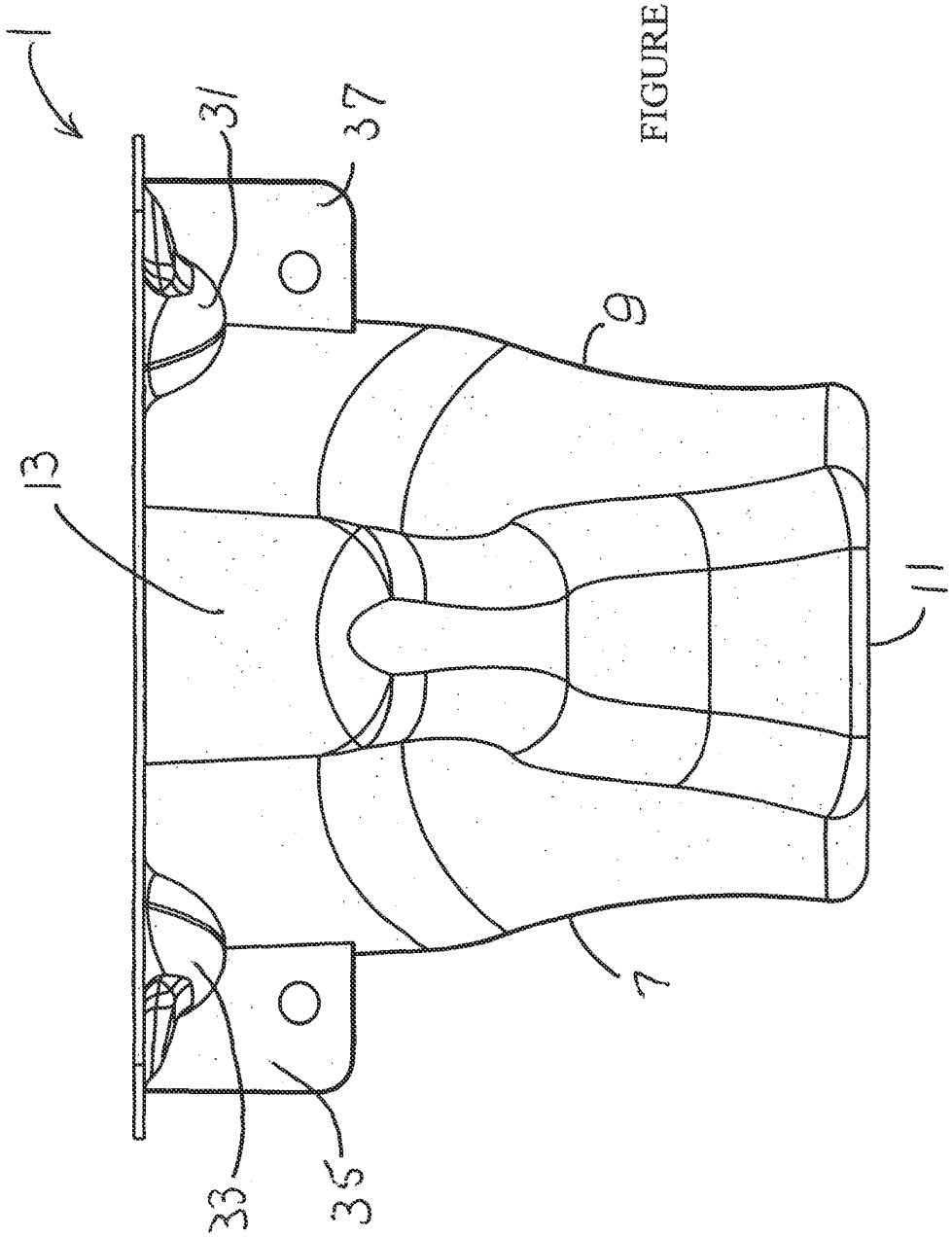

FIGURE 4

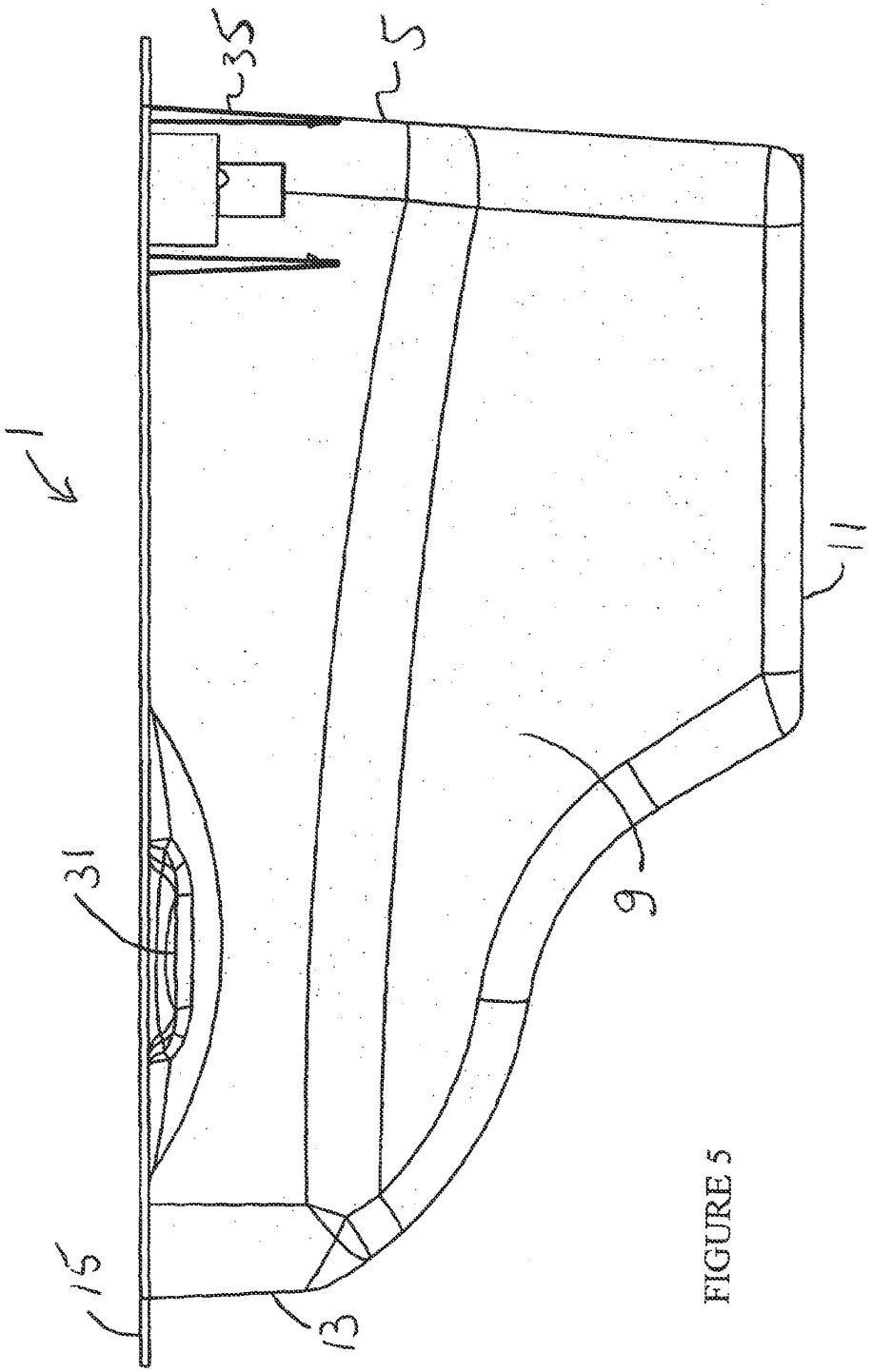

FIGURE 5

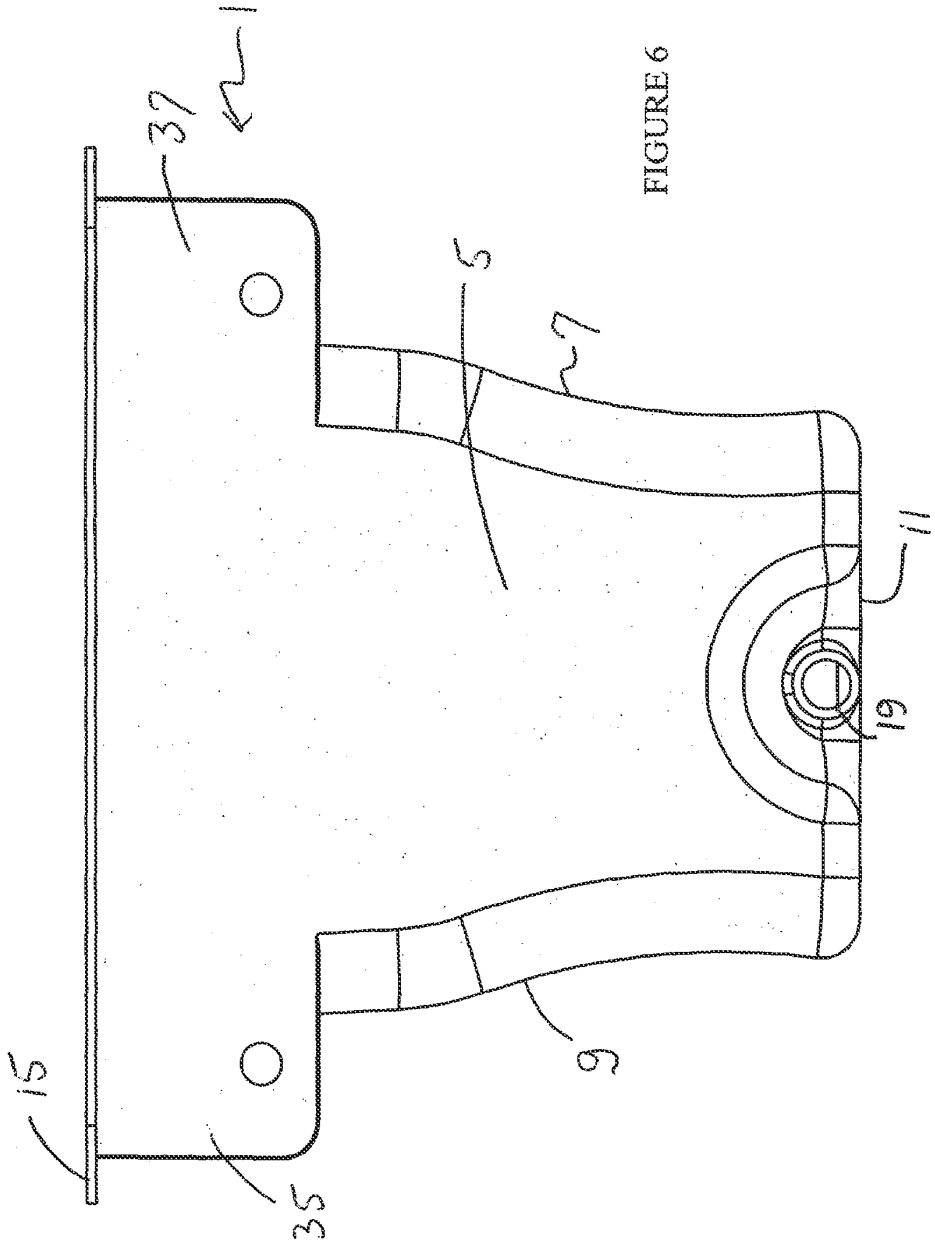

FIGURE 6

FIGURE 7

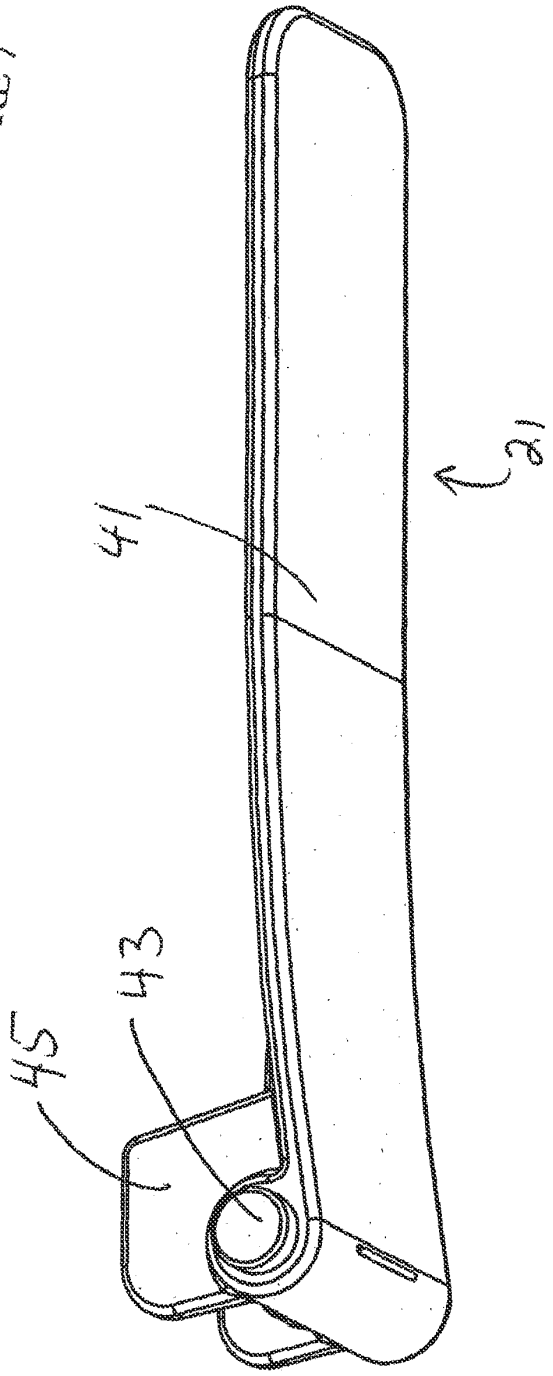

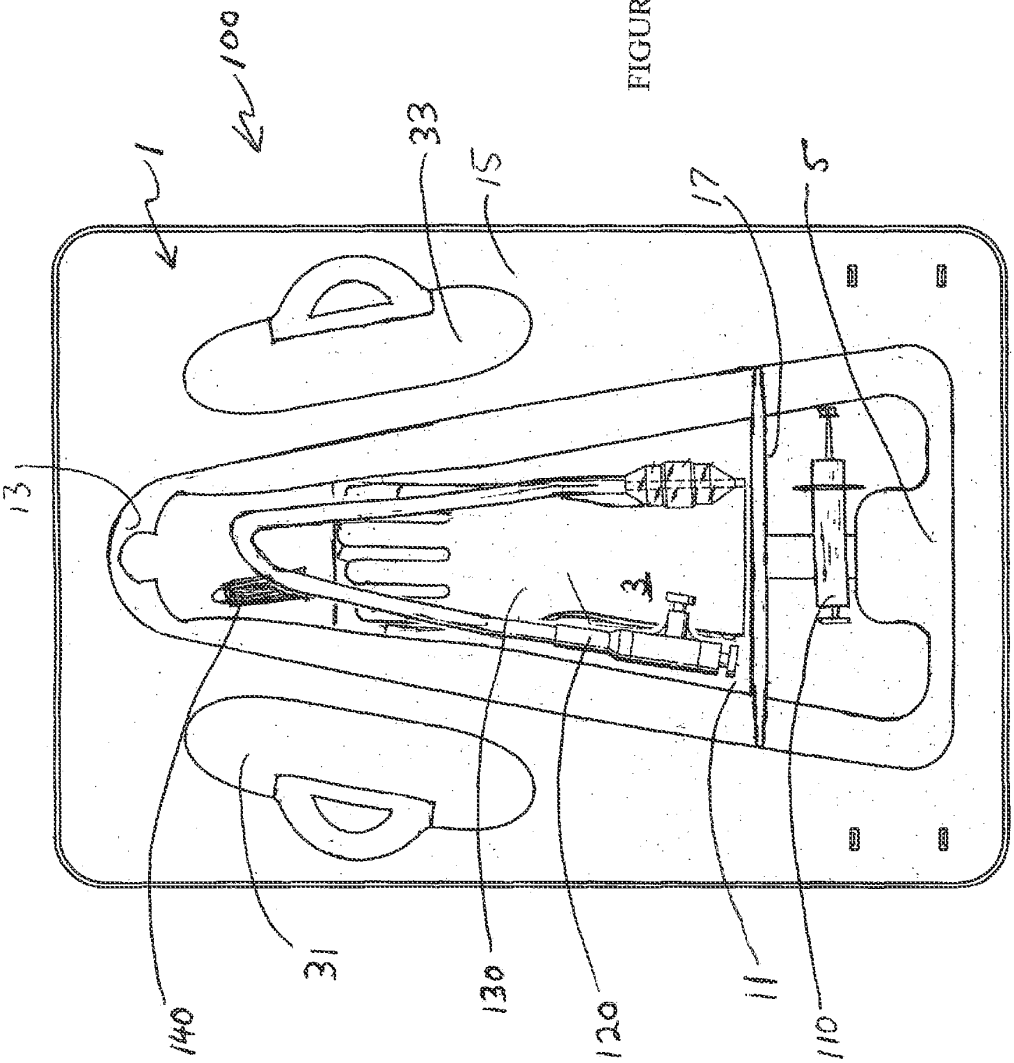

FIGURE 8

ERGONOMIC UROLOGICAL CATHETERIZATION/IRRIGATION TRAY

BACKGROUND OF THE INVENTION

1. Field of the Invention

The present invention is an ergonomic urological catheterization/irrigation tray. The tray has a shape that will fit between the legs of a patient, has a contoured or terraced recess so as to create a tapered wall/bottom arrangement (easier to rest atop upper leg areas when the patient is seated). Further, the present invention has support wings, drainage accommodations, and accessory accommodations.

2. Information Disclosure Statement

The following prior art is representative of the state of the art in the field of catheterzation trays, kits and systems:

U.S. Pat. No. 3,851,649 discloses a catheterization package comprising a rigid container including a generally flat rear panel and a front panel parallel to and spaced from one another with a top wall, side walls and a bottom wall extending there between, said front panel having a recessed catheter drainage port with a catheter connected thereto adjacent the upper and one side wall of said container, said catheter being positioned within an open sided recess in said one wall with said port at one end thereof a container drainage port having a removable closure positioned in said front wall adjacent the upper and the other side wall of said container, a plurality of discrete recesses in said front wall carrying therein a plurality of catheterization components and cover means releasable retained adjacent said front wall for retaining said components including said catheter within their individual recesses, said container upon removal of said components being utilize for collection of liquid drained through said catheter.

U.S. Pat. No. 4,160,505 discloses a urethral catheterization tray providing a sterile, self-contained catheterization package and work area.

U.S. Pat. No. 4,811,847 discloses a package for an urinary catheter that consists of a generally rectangular tray with an open top, to which a peel-back cover is bonded, containing a catheter assembly, a syringe prefilled with bacteriostatic water, and two gloves. The catheter assembly is designed such that a urinary catheter may be simply and efficiently placed into the bladder under sterile conditions. The catheter assembly consists of a heat shrunk seal to hold the end cap, three intermediate caps with antiseptic soaked sponge tips bonded to the ends, and the tube-like guide in proximity therewith. The catheter passes through the guide after removal of the heat shrunk seal and the systematic removal and utilization of the end cap and the three intermediate caps. A protective shroud encloses the distal end of the catheter, as it is bonded to the guide. A biocompatible lubricant is contained between the third intermediate cap and the guide.

U.S. Pat. No. 5,242,398 discloses a catheter and a sheath enclosing the catheter to preserve the sterility thereof, the sheath being provided with a plurality of fold lines which form accordion-like pleats to enable a collapse of the sheath at a point of insertion of the catheter into a patient. The sheath is provided at a distal end of the catheter with a flange for engaging a patient during an insertion of the catheter into the patient. A catheter assembly also comprises an anchor balloon attached to the catheter at a distal end thereof, an ancillary balloon attached to the catheter at a point spaced in a proximal direction from the anchor balloon, a tube connecting the ancillary balloon to the anchor balloon so as to enable communication therebetween, and a flow stop mounted to the catheter for preventing fluid from returning to the tube from the anchor balloon upon a pressurization of the anchor balloon with fluid forced from the tube by an application of pressure to the ancillary balloon. A hollow catheter plug defining a flash chamber and having a transparent wall is connected to the catheter at a proximal end thereof for communicating with the catheter. A valve is connected to the plug for preventing fluid flow from the flash chamber.

U.S. Pat. No. 6,090,075 discloses a disposable self-lubricating catheterization assembly for inserting a catheter into the urethra of an individual for the purpose of evacuating the bladder. The catheter assembly includes a substantially rigid catheter introducer member for positioning the introducer against the urethral opening, a flexible catheter and a flexible thin-walled sheath surrounding the catheter introducer comprises a reservoir portion, a guide portion, lubricant and a membrane. The lubricant essentially fills the reservoir and is prevented by the membrane from prematurely coating the catheter, in order to facilitate grasping of the catheter and feeding of the tube along the urethra and into the bladder. A catheterization assembly in accordance with the present invention is suitable for use for self-catheterization and subsequent infection of the urinary tract. The improved easy-to-use disposable catheterization kit is also economically practical for use for temporary catheterization in hospitals, mobile emergency facilities, doctors' offices, rehabilitation facilities, nursing homes and the like.

Notwithstanding the prior art, the present invention is neither taught nor rendered obvious thereby.

SUMMARY OF THE INVENTION

The present invention relates to an ergonomic urological catheterization/irrigation tray. The tray includes a tray structure having a recessed area that includes at least a bottom, opposite side walls, a front and a back, wherein the front has a first width of a predetermined dimension and the back has a second width of a predetermined dimension less then the first width, such that the recessed area is wider at the front than it is at the back. The recessed area has at least one drain located at a lower area thereof. The tray further includes a top flange extending at least outwardly each of the opposite side walls, wherein a user may rest the flange on front upper portions of legs when in a supine position, and may discharge or be relieved into the tray.

The ergonomic urological catheterization/irrigation tray, in preferred embodiments, has a recessed area formed by the bottom, opposing sidewalls, front and back with a top view in a substantially trapezoidal shape.

In preferred embodiments, the present invention ergonomic urological catheterization/irrigation tray further includes at least two folding wing supports adapted to be folded into alignment with one of the opposing sidewalls, the front and the back, and adapted to be unfolded so as to be in a substantially horizontal orientation and extending outwardly from the tray for resting on front upper positions of legs. The at least two folding wing supports may be hingedly connected to the flange of the tray structure.

The ergonomic urological catheterization/irrigation tray wherein recessed area includes a divider wall creating two separate compartments. The divider wall has a minimum height that is less than minimum heights of all of the opposing sidewalls, the front and the back.

The ergonomic urological catheterization/irrigation tray wherein the at least two folding wing supports are hingedly

connected to the flange of the tray structure, e.g. with hinge pins or unistructurally molded living hinges.

The ergonomic urological catheterization/irrigation tray kit wherein the at least two folding wing supports are hingedly connected to the back of the tray.

The ergonomic urological catheterization/irrigation tray wherein the at least two folding wing supports are hingedly connected to the front of the tray structure.

The ergonomic urological catheterization/irrigation tray wherein the tray has tapered sidewalls adapted to accommodate legs.

The ergonomic urological catheterization/irrigation tray kit wherein the bottom has non-flat topography.

The present invention also includes an ergonomic urological catheterization/irrigation tray kit. The kit includes:

(a.) the tray described above;

(b.) a Foley catheter;

(c.) a urinary tract lubricant;

(d.) surgical gloves;

(e.) an inflation syringe for inflation of a catheter with fluid;

(f.) irrigation syringe;

(g.) evacuation tubing; and,

(h.) antiseptic solutions.

BRIEF DESCRIPTION OF THE DRAWINGS

The present invention should be more fully understood when the specification herein is taken in conjunction with the drawings appended hereto wherein:

FIG. **1** shows a top oblique view of one embodiment of the present invention ergonomic urological catheterization/irrigation tray;

FIG. **2** shows a bottom oblique view of the present invention device shown in FIG. **1**;

FIG. **3** shows a top view of the present invention device show in FIG. **1**;

FIG. **4** illustrates a backend view of the present invention device shown in FIG. **1**;

FIG. **5** illustrates a side view of the present invention device shown in FIG. **1**;

FIG. **6** shows a front view of the present invention device shown in FIG. **1**;

FIG. **7** shows a bottom oblique view of one embodiment of a support wing used with a present invention tray; and,

FIG. **8** shows a top view of a present invention ergonomic urological catheterization/irrigation try kit.

DETAILED DESCRIPTION OF THE PRESENT INVENTION

FIG. **1**, showing a top oblique view, FIG. **2** showing a bottom oblique view, FIG. **3** showing a top view, FIG. **4** showing a backend view, FIG. **5** showing a side view, FIG. **6** showing a front view, taken together illustrate a present invention catheterization/irrigation tray **1**. It includes a recessed area **3** that includes a front **5**, opposing side walls **7** and **9**, bottom **11**, back **13** and flange **15**. The back **13** has a width that is significantly less than the width of front **5** such that opposing side walls **7** and **9** are non-parallel and tapered towards each other from front **5** to back **13**. Thus, recessed area **3** has a generally trapezoidal footprint from a top view. Note also that, in this embodiment bottom **11** is not horizontally and, thus recessed area **3**, has a non constant depth. In this embodiment bottom **11** has terraced arrangement with low area **11A** and shallow area **11B** (FIG. **2**). Top flange **15** extends outwardly from opposing side walls **7** and **9** and acts in part so that a patient may have flange **15** rest on front upper portions of the patient's legs when in a seated position.

Optionally, but preferred, folding wing supports **21** and **23** are hingedly connected to side walls **7** and **9**, respectively, and have two distinct positions. Wing support **21** is open so as to be substantially horizontally and wing support **23** is closed and thus in alignment with side wall **9**. When not in use, both would be closed (folded down) and when in use would be opened. Drain **19** is located near bottom **11** for liquid drainage and may be directly connected to one or two drain holes in bottom **11**. Drain **19** may be connected to flexible tubing and into a receiving receptance or safe drain, or may otherwise be used in accordance with acceptable standards and procedures. Optional divider wall **17** creates two separate compartments. The top **25** of divider wall **17** is lower than the top edges of recessed area **3**. Thus, should fluids totally fill the volume behind divider wall **17**, fluids will over flow into compartment **27** rather than spill over flange **15**.

Optional Foley catheter lubricating wells **31** and **33** are available for right handed and left handed users so that lubricating material could be applied to the catheter or other insertion device by filling the well with lubricant and then sliding the device through the lubricant in the well.

A patient requiring an urological procedure may be positioned with tray **1** at back **13** below the scrotum and penis with flange **15** preventing the back portion of tray **1** from sliding or dropping downwardly between the patient's legs by resting the front upper portions of the legs while support wings **21** and **23** will perform a similar function for the front portion of tray **1**. The surgeon will proceed to evacuate the bladder of its contents, urine and/or clots.

Bracket sets **35** and **37** are integrally formed into the device with orifices adapted to receive the support wings. FIG. **7** shows support wing **21** from a bottom, oblique view in its open position, it includes, a main rest bar **41**, pivot axle **43** that inserts directly into the orifices of the bracket sets and stops such as stop **45** to maintain a firm horizontal position when open.

FIG. **8** shows a top view of the present invention kit **100**. It includes tray **1** described above with identical components identically numbered. Also included is urinary tract inflation syringe **10**, catheter **120**, surgical gloves **130** and a tube of lubricant fluid **140**. The kit is used as described generally above. The gloves being worn by the surgeon, the catheter being lubricated, inserted and then inflated with fluid using the syringe.

Obviously, numerous modifications and variations of the present invention are possible in light of the above teachings. It is therefore understood that within the scope of the appended claims, the invention may be practiced otherwise than as specifically described herein.

What is claimed is:

1. An ergonomic urological catheterization/irrigation tray which comprises:

a tray structure having a recessed area that includes at least a bottom, opposite side walls, a front and back, wherein said front has a first width of a predetermined dimension and said back has a second width of a predetermined dimension less than said first width, such that said recessed area is wider at the front than it is at the back, said recessed area having at least one drain located at a lower area thereof, said tray including a flange extending outwardly from each of said opposing side walls, and including at least two folding wing supports adapted to be folded into alignment with one

of said opposing sidewalls, said front and said back, and adapted to be unfolded so as to be in a substantially horizontal orientation and extending outwardly from said tray, wherein said flange and said wing supports are dimensioned and configured to rest on front upper portions of legs of a user when in a supine position, and to discharge or be relieved into said tray.

2. The ergonomic urological catheterization/irrigation tray of claim **1** wherein said tray recessed area formed by said bottom, opposing sidewalls, front and back has a top view trapezoidal shape.

3. The ergonomic urological catheterization/irrigation tray of claim **1** wherein said recessed area includes a divider wall creating two separate compartments to create an irrigation well and drainage well.

4. The ergonomic urological catheterization/irrigation tray of claim **3** wherein said divider wall has minimum height that is less than a minimum heights of all of said opposing sidewalls, said front and said back.

5. The ergonomic urological catheterization/irrigation tray of claim **1** wherein said at least two folding wing supports are hingedly connected to said flange of said tray structure.

6. The ergonomic urological catheterization/irrigation tray of claim **1** wherein said at least two folding wing supports are hingedly connected to said front of said tray structure.

7. The ergonomic urological catheterization/irrigation tray of claim **1** wherein said tray has tapered sidewalls adapted to accommodate legs.

8. The ergonomic urological catheterization/irrigation tray of claim **7** wherein said bottom has partially non-flat topography.

9. An ergonomic urological catheterization/irrigation tray which compromises:

a tray structure having a recessed area that includes at least a bottom, opposite side walls, a front and back, wherein said front has a first width of a predetermined dimension and said back has a second width of a predetermined dimension less than said first width, such that said recessed area is wider at the front than it is at the back, said recessed area having at least one drain located at a lower area thereof, said tray including a flange extending outwardly from each of said opposing side walls, and including at least two folding wing supports adapted to be folded into alignment with one of said opposing sidewalls, said front and said back, and adapted to be unfolded so as to be in a substantially horizontal orientation and extending outwardly from said tray, wherein a user may rest said flange and said wing supports on front upper portions of legs when in a supine position, and my discharge or be relieved into said tray,

and further wherein said support wings have living hinges.

10. The ergonomic urological catheterization/irrigation tray of claim **9** wherein said tray recessed area formed by said bottom, opposing sidewalls, front and back has a top view trapezoidal shape.

11. The ergonomic urological catheterization/irrigation tray of claim **9** wherein said recessed area includes a divider wall creating two separate compartments to create an irrigation well and drainage well.

12. The ergonomic urological catheterization/irrigation tray of claim **11** wherein said divider wall has minimum height that is less than a minimum heights of all of said opposing sidewalls, said front and said back.

13. The ergonomic urological catheterization/irrigation tray of claim **9** wherein said at least two folding wing supports are hingedly connected to said flange of said tray structure.

14. The ergonomic urological catheterization/irrigation tray of claim **9** wherein said at least two folding wing supports are hingedly connected to said front of said tray structure.

15. The ergonomic urological catheterization/irrigation tray of claim **9** wherein said tray has tapered sidewalls adapted to accommodate legs.

16. The ergonomic urological catheterization/irrigation tray of claim **15** wherein said bottom has partially non-flat topography.

* * * * *

US006840379B2

(12) **United States Patent**
Franks-Farah et al.

(10) **Patent No.: US 6,840,379 B2**
(45) **Date of Patent: *Jan. 11, 2005**

(54) **MALE CLEAN INTERMITTENT CATHETER SYSTEM**

(76) Inventors: **Judith Franks-Farah**, 3069 Pheasant Creek, Northbrook, IL (US) 60062; **Shirley P. Grey**, 429 Edgewater, Wauconda, IL (US) 60084; **Sylvia D. Aruffo**, 215 Prospect, Highland Park, IL (US) 60035; **Carol A. Outland**, 2541 Athens Rd., Olympia Fields, IL (US) 60461

(*) Notice: Subject to any disclaimer, the term of this patent is extended or adjusted under 35 U.S.C. 154(b) by 0 days.

This patent is subject to a terminal disclaimer.

(21) Appl. No.: **10/661,989**

(22) Filed: **Sep. 11, 2003**

(65) **Prior Publication Data**

US 2004/0055925 A1 Mar. 25, 2004

Related U.S. Application Data

(63) Continuation of application No. 09/879,321, filed on Jun. 12, 2001, now Pat. No. 6,640,976.
(60) Provisional application No. 60/211,152, filed on Jun. 13, 2000.

(51) **Int. Cl.**[7] **B65D 69/00**
(52) **U.S. Cl.** **206/571**; 206/232; 206/440; 604/544
(58) **Field of Search** 206/232, 570–572, 206/581, 438, 440, 459.5, 364; 604/172, 327–331, 355, 263, 544

(56) **References Cited**

U.S. PATENT DOCUMENTS

3,898,993 A * 8/1975 Taniguchi 604/172
4,080,970 A 3/1978 Miller
4,169,550 A 10/1979 Williams
4,212,392 A 7/1980 McKenzie
4,522,302 A 6/1985 Paikoff
4,917,238 A 4/1990 Schumacher
5,117,981 A 6/1992 Crawford et al.
5,544,753 A 8/1996 Monica
5,582,599 A * 12/1996 Daneshvar 206/438
D380,234 S 6/1997 Hipple et al.
5,643,233 A 7/1997 Turner
5,660,176 A 8/1997 Iliff
5,718,245 A 2/1998 Horn
5,752,234 A 5/1998 Withers
5,785,650 A 7/1998 Akasaka et al.
D398,772 S 9/1998 Benham
5,803,249 A 9/1998 Harsanyi, Jr. et al.
5,848,700 A 12/1998 Horn
5,931,303 A * 8/1999 Salvadori 206/570
5,931,304 A 8/1999 Hammond
5,961,446 A 10/1999 Beller et al.
5,979,658 A 11/1999 Allen et al.
6,068,121 A 5/2000 McGlinch
6,090,075 A 7/2000 House
6,116,426 A 9/2000 Slonim
6,238,383 B1 5/2001 Karram et al.
6,579,271 B1 * 6/2003 Aruffo et al. 604/355

* cited by examiner

Primary Examiner—Luan K. Bui
(74) *Attorney, Agent, or Firm*—Bell, Boyd & Lloyd LLC

(57) **ABSTRACT**

A method and system for performing intermittent male catheterization by a patient, a patient's caregiver, or a health care provider are revealed. The system contains apparatus for at least one intermittent male catheterization and includes at least one male catheter, antibacterial soap, a lubricant, step-by step-instructions, and a container, where the above named items are positioned inside the container. The method includes self-care documentation for a medical professional to instruct a user in the use of the system and to keep a record that the instruction of the patient was performed.

10 Claims, 8 Drawing Sheets

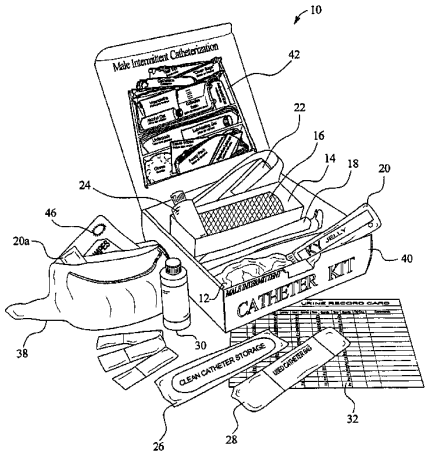

FIG. 1

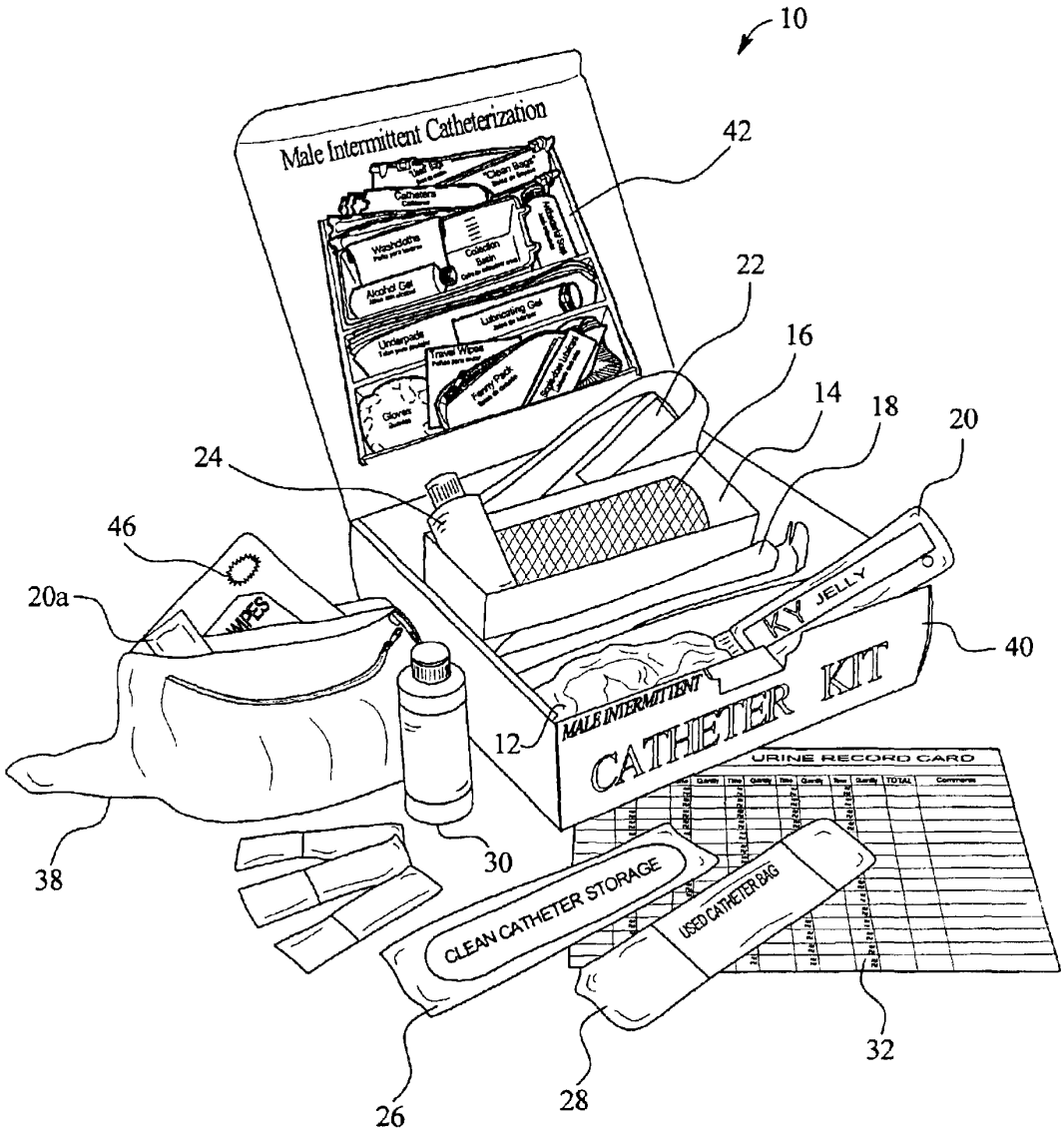
10
Male Intermittent Catheterization
42
22
16
14
18
20
24
46
20a
WIPES
KY JELLY
40
MALE INTERMITTENT
CATHETER KIT
12
URINE RECORD CARD
38
30
CLEAN CATHETER STORAGE
USED CATHETER BAG
32
26
28

FIG. 1A

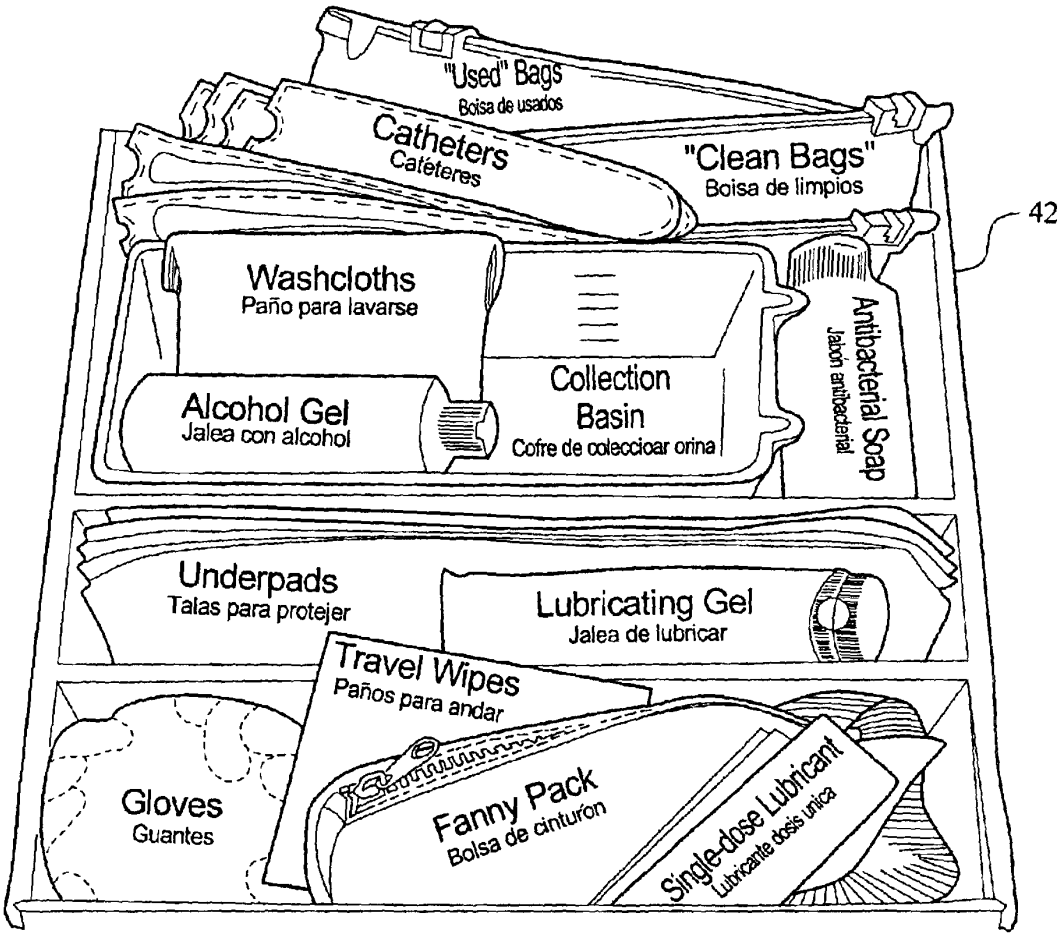
"Used" Bags
Boisa de usados
Catheters
Catéteres
"Clean Bags"
Boisa de limpios
42
Washcloths
Paño para lavarse
Alcohol Gel
Jalea con alcohol
Collection
Basin
Cofre de coleccioar orina
Antibacterial Soap
Jabon antibacterial
Underpads
Talas para protejer
Lubricating Gel
Jalea de lubricar
Travel Wipes
Paños para andar
Gloves
Guantes
Fanny Pack
Bolsa de cinturon
Single-dose Lubricant
Lubricante dosis unica

FIG. 2A

34

Clean Intermittent Catheterization Step-by-Step

page 1

This guide is to be followed only on the order of a physician. This guide is not a substitute for your health care professional's instructions. All the medical supplies you need are in this kit. The name of each item is printed in color below. Read all the steps and use the Map to locate each one before you begin. Keep everything in the box until the guide tells you to use it.

Prepare for Care

1 Get a clean, fresh towel. Wash your hands with Antibacterial Soap and warm water. Dry them only on the fresh towel.

If you have a caregiver do this for you, they should wash hands and put on the Gloves.

Spread out two clean paper towels for a work surface. If you are going to do the procedure on a bed or chair, put the Underpad under your buttocks.

2 Wash your penis with the Paper Wash Cloth and Antibacterial Soap and warm water. Clean the head of your penis well, pulling the foreskin back if necessary.

Rinse the Paper Wash Cloth clean, squeeze it dry and place it on a corner of one of the paper towels. Wash and dry your hands again.

A caregiver wearing gloves does not need to wash again.

The Catheter

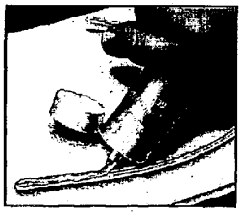

3 Take the Catheter out of the package and lay it on the paper towel. Flip open the cap of the Lubricating Jelly. Squeeze 3 inches of Jelly onto the Catheter, starting at the tip. Be careful not to touch the Catheter with the tube.

4 Hold the Catheter an inch behind the Jelly. Roll it so that the Jelly covers all sides.

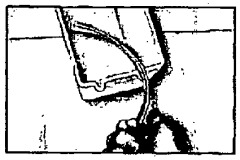

5 Lift the Catheter away from the paper towel and lay the wide end in the Collection Container. Move the Container close to your body so you do not accidentally pull the wide end of the Catheter out.

6 Hold the penis straight out with one hand and insert the Catheter with the other hand. Pull the penis away from your body to keep the channel straight. Push the Catheter in until a bit of urine comes out.

If the Catheter stops, wait a minute to let the muscles relax, then gently begin to push again.

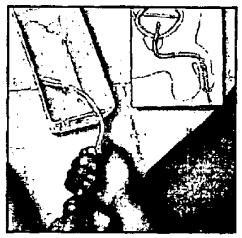

7 Slowly push the Catheter in one more inch. Now lower the angle of the penis. The bladder will empty while you hold the Catheter in place. When the urine stops, slowly pull the Catheter out.

Continued on the back of this page...

FIG. 2B

34

Clean Intermittent Catheterization *continued...* page 2

Clean for Next Time

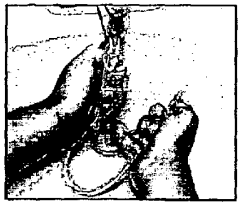

8 Take the Catheter to a sink and wash it with Antibacterial Soap and warm water. Hold the Catheter under running tap water to rinse well, inside and out. Shake it several times to get off extra water.

9 Place the Catheter on the clean paper towel to air dry. Pick up the Paper Wash Cloth you left on the paper towel and use it to remove any Jelly left on the head of your penis. Pull the foreskin back down.

10 Check the level of urine in the Container. Record this amount on the Urine Record Card. Notice the color and smell of the urine and write these on the Record Card, also.

11 Empty the Collection Container. Wash the Container with Antibacterial Soap and water. Rinse it well. Close the cap on the tube of Lubricating Jelly. Put all the supplies back in the box. Throw away the Paper Wash Cloth and take away the Underpad.

12 The Catheter should be dry by this time. Put it inside the Plastic Bag marked "Clean Catheter" and zip it closed.

The caregiver may take off the gloves now, throw them away and wash their hands.

When You Travel

A For every four hours you expect to be away, put into the Fanny Pack:

- A clean Catheter in the "Clean Catheter" Bag
- One Packet of Lubricating Jelly
- Two clean paper towels

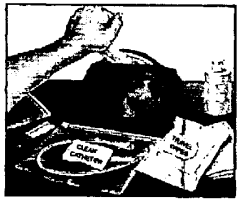

Also put in the pack of pre-wet Travel Wipes and the "Used Catheter" Bag.

B When it is time to do your procedure, find a place like a bathroom and follow Steps 1-12 above, using the paper towels for a clean work surface.

C When you take the Catheter out, rinse it off if possible and store it in the "Used Catheter" Bag. Wash and dry your hands.

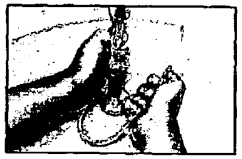

D When you are home again, wash your used Catheters very well with Antibacterial Soap and water. Store them in your "Clean Catheter" Bag.

If you need more supplies, keep the box, this Careguide™ Step-by-Step, the Fanny Pack and your Collection Container. Find the reorder form in the box and call the toll-free number 2 or 3 days before you run out.

FIG. 3A

34A

Cateterización Intermitente para el hombre

Paso a Paso

pagina 1

Este Guía debe ser usada solmente con la orden de su doctor. Esta guia no substituye las Intrucciónes de su doctor o enfermera. Todas las provicones necesarias estan en la caja. El nombre de cada objeto está escrito a color. Lea todos los pasos y use el mapa para localizar cada uno *antes de empezar.* Mantenga todo en la caja hasta que la guia le diga cuando usarlo

Preparativos

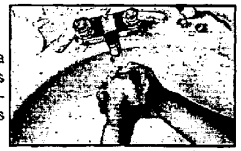

1 Busque una toalla limpia y fresca. Lavese las manos con el Jabón Antibacterial y agua tibia. Sequelas solo con la toalla limpia.

Si tiene a una persona ayudandolo, el o ella debe de ponerse los Guantes despues de averse lavado las manos.

Use dos Toallas de papel limpias como superficie para poder trabajar. Si Ud. va a hacer el procedimiento en la cama o en una silla, ponga las Telas para Protejer debajo de su recto.

2 Lave su pene con el Paño para Lavarse, el Jabón Antibacterial, y agua tibia. Limpie la cabeza de su pene muy bien. Si Ud. no ha sido cincumcisado, mueva su piel hacia arriba para poder lavarse mejor.

Remoje el Paño para Lavarse, exprimalo hasta que este seco y pongalo en la esquina de una de las toallas de papel. Lave y seque sus manos otra vez.

Su ayudante usando guantes no tiene que levarse otra vez.

El Catétere

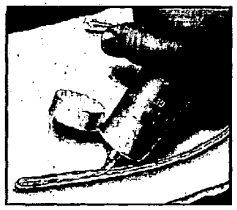

3 Saque el Catétere de su empaquetaje y coloquelo en la toalla de papel. Abra el pomo de Jalea para lubricar. Exprima 3 inches de jalea en el Caté tere, empezando por la punta fina. Tenga cuidado de no tocar el Caté tere con el pomo de jalea

4 Sostenga el Catétere de manera que la jalea toque la toalla de papel. Mueva el Catétere en forma circular para que se llene de jalea por todos lados.

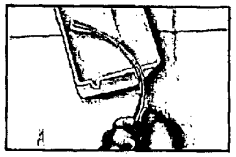

5 Recoja el Catétere de la tolla de papel y coloque la punta gruesa del Catétere en el Cofre de Coleccionar Orina. Acerque el cofre a su cuerpo para asi evitar que Ud. accidentalmente jale el Catétere fuera del cofre.

6 Sostenga el pene en posición recta y firme- con una mano, y meta el Catétere con la otra. Jale el pene hacia fuera de su cuerpo para mantener el canal recto. Empuje el Catétere hacia adentro hasta que orine un poquito.

Si el Catétere se detiene, espere un minuto para que se relaje el musculo, y despues trate de meterlo otra vez.

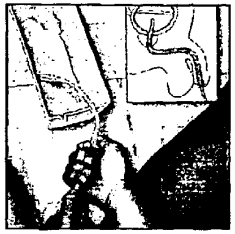

7 Lentamente meta el Catétere otro inche más. Ahora rebaje el angulo de su pene. La bejiga se vaciara mientras Ud. mantenga el Catétere en posición. Cuando deje de orinar, lentamente saque el Catétere.

Continua atrás...

FIG. 3B

34A

Cateterización Intermitente para el hombre *continuación...* pagina 2

Limpie para usar la Proxima Vez

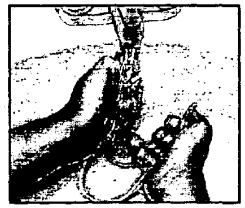

8 Lleve el Catétere a un lavamanos y limpielo con Jabón Antibacterial y agua tibia. Mantenga el Catétere bajo agua para remojarlo bien por adentro y por afuera. Sacudalo bien para sacar toda el agua.

9 Ponga el Catétere en la toalla de papel limpia para que se seque al aire libre. Recoja el Paño para Lavarse que Ud. dejo en la esquina de la toalla de papel y uselo para limpiar los reciduos de orina en la cabeza del pene. Baje la piel de su pene otra vez.

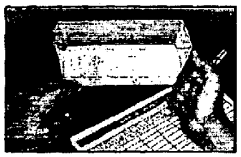

10 Cheque el nivel de orina en el cofre. Escriba el número en la Tarjeta Diaria de Orina. Note el color y olor de su orina y escribalo en la tarjeta también.

11 Vacie el Cofre de Coleccionar Orina. Lave el cofre con Jabón Antibacterial y agua. Remojelo bien. Cierre la tapa del pomo de Jalea para Lubricar. Meta de vuelta en la caja todas las proviciones. Bote el Paño para Lavarse, y guarde las Telas para Protejer, pero si no están limpias botelas.

12 El Catétere ya debe de estar seco. Metalo en la bolsa de plastico que dice "Bolsa de Lipmpios", y cierrela.

Su ayudante ya se puede quitar los guantes, botarlos y lavarse las manos.

Cuando Viaje

A Por cada 4 horas que Ud. este de viaje meta en la Bolsa de cinturón:
- Un Catétere limpio en la Bolsa de Limpios
- Un Paquete de Jalea para Lubricar
- Dos toallas de papel limpias

Tambien meta el paquete de Paños para Andar y la Bolsa de Usados.

B Cuando sea hora de hacer el procedimiento, encuentre un lugar, como un baño y siga los pasos 1-12, usando las toallas de papel como una superficie limpia de trabajo.

C Cuando termine de usar el Catétere, remojelo si es posible y metalo en la Bolsa de Usados. Lave y seque sus manos.

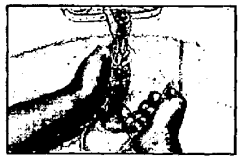

D Cuando este en casa de vuelta, limpie muy bien los Catéteres usados con Jabon Antibacterial y agua. Guardelos en la Bolsa de Catéteres limpios.

Si necesita más suministros, guarde la caja, esta guía, la bolsa de cinturón, y el cofre de coleccionar orina. Encuentre en la caja el formulario para ordenar más y llame nuestro número de telefono gratis 2 o 3 dias antes de que se le acaben los suministros.

FIG. 4

44

SELF CARE DOCUMENTATION

PATIENT'S NAME

Male Clean Intermittent Catheterization — *Step-by-Step* — page 1

This sheet is a reduced-size copy of the patient's illustrated, full color instructions. The purpose of this sheet is to confirm that self care training has been carried out by the clinician and understood by the patient and/or caregiver.

This guide is to be followed only on the order of a physician. This guide is not a substitute for your health care professional's instructions.

All the medical supplies you need are in this kit. The name of each item is printed in color below. Read all the steps and use the Map to locate each one before you begin. Keep everything in the box until the guide tells you to use it.

Prepare for Care

1. Get a clean, fresh towel. Wash your hands with *Antimicrobial Soap and warm* water. Dry them only on the fresh towel.

If you have a caregiver do this procedure for you, they should put on the Gloves after washing their hands.

Spread out two clean paper towels for a work surface. If you are going to do the procedure on a bed or chair, put the Underpad under your buttocks.

2. Wash your penis with the Paper Wash Cloth and Antibacterial Soap and warm water. Clean the head of your penis well. If you are uncircumcised, pull the foreskin back to wash well.

Rinse the Paper Wash Cloth clean, squeeze it dry and place it on a corner of one of the paper towels. Wash and dry your hands again.

A caregiver wearing gloves does not need to wash again.

The Catheter

3. Take the Catheter out of the package and lay it on the paper towel. Flip open the cap of the Lubricating Jelly. Squeeze 3 inches of Jelly onto the Catheter, starting at the tip. Be careful not to touch the Catheter with the tube.

4. Hold the Catheter an inch behind the Jelly. Roll it so that the Jelly covers all sides.

5. Lift the Catheter away from the paper towel and lay the wide end in the Collection Container. Move the Container close to your body so you do not accidentally pull the wide end of the Catheter out.

6. Hold the penis straight out with one hand and insert the Catheter with the other hand. Pull the penis away from your body to keep the channel straight. Push the Catheter in until a bit of urine comes out.

If the Catheter stops, wait a minute to let the muscles relax, then gently begin to push again.

7. Push the Catheter in another inch slowly. Now lower the angle of the penis. The bladder will empty while you hold the Catheter in place. When the urine stops, slowly pull the Catheter out.

Patient Name _____
Provider Name _____
Date _____

Check here when Page 1 of training is complete. ☐
Provider initials _____
Patient initials _____

Male Clean Intermittent Catheterization — *continued...* — page 2

Clean for Next Time

8. Take the Catheter to a sink and wash it with Antibacterial Soap and warm water. Hold the Catheter under running tap water to rinse well, inside and out. Shake it several times to get off extra water.

9. Place the Catheter on the clean paper towel to air dry. Pick up the Paper Wash Cloth you left on the paper towel and use it to remove any Jelly left on the head of your penis. Pull the foreskin back down.

10. Check the level of urine in the Container. Record this amount on the Urine Record Card. Notice the color and smell of the urine and write these on the Record Card, also.

11. Empty the Collection Container. Wash the Container with Antibacterial Soap and water. Rinse it well. Close the cap on the tube of Lubricating Jelly. Put all the supplies back in the box. Throw away the Paper Wash Cloth and take away the Underpad.

12. The Catheter should be dry by this time. Put it inside the Plastic Bag marked "Clean Catheter" and zip it closed.

The caregiver may take off the gloves now, throw them away and wash their hands.

When You Travel

A. For every four hours you expect to be away, put into the Fanny Pack:
- A clean Catheter in the "Clean Catheter" Bag
- One Packet of Lubricating Jelly
- Two clean paper towels

Also put in the pack of pre-wet Travel Wipes and the "Used Catheter" Bag.

B. When it is time to do your procedure, find a place like a bathroom and follow Steps 1-12 above, using the paper towels for a clean work surface.

C. When you take the Catheter out, rinse it off if possible and store it in the "Used Catheter" Bag. Wash and dry your hands.

D. When you are home again, wash your used Catheters very well with Antibacterial Soap and water. Store them in your "Clean Catheter" Bag.

If you need more supplies, keep the box, this Careguide™ Step-by-Step, the Fanny Pack and your Collection Container. Find the reorder form in the box and call the toll-free number 2 or 3 days before you run out.

Check here when Page 2 of training is complete. ☐
Provider initials _____
Patient initials _____

We agree that the patient understands these instructions and is ready to carry out self care:

_____ Provider
Signature

_____ Patient
Signature

FIG. 5

32

URINE RECORD GUIDE

Patient Name

Your doctor will tell you how often to record your urine output. Remember to circle AM or PM when you write the time.

Date	Time	Quantity	Time	Quantity	Time	Quantity	Time	Quantity	Time	Quantity	TOTAL	Comments
	AM PM		AM PM		AM PM		AM PM		AM PM			
	AM PM		AM PM		AM PM		AM PM		AM PM			
	AM PM		AM PM		AM PM		AM PM		AM PM			
	AM PM		AM PM		AM PM		AM PM		AM PM			
	AM PM		AM PM		AM PM		AM PM		AM PM			
	AM PM		AM PM		AM PM		AM PM		AM PM			
	AM PM		AM PM		AM PM		AM PM		AM PM			
	AM PM		AM PM		AM PM		AM PM		AM PM			
	AM PM		AM PM		AM PM		AM PM		AM PM			
	AM PM		AM PM		AM PM		AM PM		AM PM			
	AM PM		AM PM		AM PM		AM PM		AM PM			
	AM PM		AM PM		AM PM		AM PM		AM PM			
	AM PM		AM PM		AM PM		AM PM		AM PM			
	AM PM		AM PM		AM PM		AM PM		AM PM			
	AM PM		AM PM		AM PM		AM PM		AM PM			

Catherize yourself____times a day at_____.Each day drink___8oz. glasses fluid, but no more than___8oz. glasses fluid. Your medication is:_____.

MALE CLEAN INTERMITTENT CATHETER SYSTEM

PRIORITY CLAIM

This application is a continuation of U.S. patent application Ser. No. 09/879,321, filed Jun. 12, 2001 now U.S. Pat. No. 6,640,976, which claims the benefit of provisional application Ser. No. 60/211,152, filed Jun. 13, 2000.

CROSS-REFERENCE TO RELATED APPLICATIONS

This application is related to the following commonly-owned patent applications: "METHOD FOR DETERMINING THE CONTENT OF A SELF-CARE KIT," Ser. No. 09/709,917, "PATIENT DISCHARGE SYSTEM AND METHOD FOR SELF-CARE OF A POST-SURGERY DRAIN," Ser. No. 09/779,796, now U.S. Pat. No. 6,579,271; and "FEMALE CLEAN INTERMITTENT CATHETER SYSTEM," Ser. No. 09/879,230.

COPYRIGHT NOTICE

A portion of the disclosure of this patent document contains material which is subject to copyright protection. The copyright owner has no objection to the facsimile reproduction by anyone of the patent document or the patent disclosure, as it appears in the Patent and Trademark Office patent file or records, but otherwise reserves all copyright rights whatsoever.

DESCRIPTION

The present invention relates in general to a system and method for using a male catheter and in particular to a system and method for clean intermittent male catheterization by a user or health care provider.

BACKGROUND OF THE INVENTION

It is estimated that urinary catheters are placed in millions of men each year in the United States alone, either due to some illness, infection or malfunction or as part of some medical procedure. Care must be taken to clean the catheter site to reduce the risk of nosocomial infection (i.e., an infection that arises due to a procedure for treating a disorder and unrelated to the disorder itself, also referred to as a "hospital infection").

The most common nosocomial infections are related to or arise from indwelling urinary bladder catheters (i.e., catheters that remain in the urinary tract for a relatively long length of time). The risk of such catheter-related nosocomial infections can be reduced using strict aseptic techniques (i.e., using gloves, disinfectants, antibacterial soaps, etc.) when handling the catheter. Moreover, the risk of infection can further be reduced by only using a catheter intermittently rather leaving the catheter in place for any length of time. Intermittent use of the catheter in conjunction with clean techniques helps to reduce the risk of catheter-related nosocomial infections and is, moreover, a far more attractive alternative for bladder evacuation to most patients who are candidates for the procedure.

Using a urinary bladder catheter under aseptic conditions in a hospital is routine. However, current medical practice emphasizes getting the patient ambulatory (and out of the hospital) as soon as possible. Consequently, catheterizations or catheter insertions are performed at home by nonprofessionals. These nonprofessionals must be taught clean techniques. However, no known comprehensive devices, apparatus or methods exists for teaching clean techniques or for facilitating such home catheter use for men.

SUMMARY OF INVENTION

The present invention provides a method and system for intermittent catheterization by the patient himself, the patient's caregiver, or a health care provider. The present invention contains apparatus for facilitating at least one catheterization and comprises: (I) at least one male catheter; (II) antibacterial soap; (III) lubricant; (IV) step-by step instructions; and (V) a container, where the above named items are positioned inside the container. It should be appreciated that the present invention may only be used on the order of a physician.

Preferred embodiments of the system contain sufficient apparatus for one month of catheter insertions (approximately 3 to 4 times a day), the antibacterial soap is in liquid form, the lubricant is in gel form, the step-by-step instructions are written in English and Spanish, although other languages (e.g., Polish, French and German for example) are contemplated. One preferred embodiment of the system includes a contents map identifying the contents and the positions of the contents, along with zipper bags, a fanny pack and a protective underpad.

In a more preferred embodiment of the system, the system contains apparatus for at least one month of catheterizations as provided previously and comprises: (I) 4 male intermittent catheters; (II) 35 disposable wipes; (III) 1 protective underpad; (IV) antibacterial liquid soap; (V) 1 tube of lubricant; (VI) step-by-step instructions; (VII) clinician step-by-step instructions or self-care documentation; and (VIII) a box, wherein the above-named items are positioned inside the box.

The method for intermittent male catheterization comprises evacuating the bladder using the apparatus of the present invention in accordance with the detailed step-by-step instructions provided in the system. In a preferred embodiment, the method which is discussed in further detail below generally includes: (I) preparing for intermittent male catheterization; (II) preparing the male catheter; (III) inserting the male catheter; (IV) draining the bladder; (V) recording and disposing of the drainage; and (VI) cleaning and storing the apparatus of the present invention.

The present invention further includes a patient education system for educating users in performing intermittent male catheterization. Specifically, the system includes a system and a set of black and white step-by-step instructions without illustrations (referred to herein as self-care documentation). An instructor (i.e., a doctor, nurse, clinician or other medical professional) uses the self-care documentation to educate the user in performing an intermittent male catheterization, preferably using the system of the present invention. The medical professional then keeps the self-care documentation documenting that the user was educated in performing the male catheterization.

It is therefore an object of the present invention to provide a system and method for intermittent male catheterization.

It is a further object of the present invention to provide detailed instructions for intermittent male catheterization using the contents of a self-care system.

An additional object of the present invention is to provide self-care documentation to be used by a medical professional in instructing users in the use of the self-care system.

Yet an additional object of the present invention is to provide a patient education system for educating users in performing intermittent male catheterization using the system.

Other objects, features and advantages of the invention will become apparent from the following detailed disclosure, taken in conjunction with the accompanying sheets of drawings, wherein like numerals refer to like parts, components and processes.

BRIEF DESCRIPTION OF THE DRAWINGS

FIG. **1** is a perspective view of the system of the present invention;

FIG. **1**A is a top plan view of a contents map of the present invention;

FIGS. **2**A and **2**B are top plan views of the step-by-step instructions in English of the system of the present invention;

FIGS. **3**A and **3**B are top plan views of the step-by-step instructions in Spanish of the system of the present invention;

FIG. **4** is a top plan view of the self-care documentation in English used by a medical professional for documenting that the users are instructed in the use of the system of the present invention; and

FIG. **5** is a top plan view of the urine record card.

DETAILED DESCRIPTION OF THE INVENTION

It should be appreciated that the figures include one or more of the following trademarks which may be used by the assignee of this application: (a) CAREGUIDE; and (b) CAREGUIDE and DESIGN. It should be appreciated that these trademarks are not part of the present invention.

The present invention is for a system **10** and method for intermittent catheterization of a patient. The user may be the patient himself, the patient's caregiver, an in-home care provider or a healthcare provider which, for brevity, are referred to herein as the "user." The system **10** provides apparatus needed for in-home catheterization.

In general, the intermittent catheterization system **10** contains at least: (I) infection prevention devices (gloves, disposable wipes, zipper bags, alcohol gel (i.e., a waterless cleaner), soap, and protective underpads); (II) insertion devices (catheter and lubricant); (III) recording devices (urine record card and collection basin); and (IV) information devices (step-by-step instructions, contents map and self-care documentation) among other items.

More specifically, as illustrated by FIGS. **1** and **1**A, the intermittent catheterization system **10** of the present invention comprises: (I) gloves **12**; (II) a collection basin **14**; (III) disposable wipes **16**; (IV) protective underpad **18**; (V) antibacterial soap **24**; (VI) lubricating gel **20**; (VII) male intermittent catheter **22**; (VIII) clean and used zipper bags **26** and **28** respectively; (IX) self-care documentation **44** (not shown in FIGS. **1** and **1**A); (X) step-by-step instructions **34** (not shown in FIGS. **1** and **1**A); and (XI) a container or box **40**. It is contemplated that the system **10** may also include a contents map **42** which identifies the contents of the container **40** and their position, and one or more waste bags.

In one preferred embodiment, the container **40** contains gloves **12**, a plastic collection basin **14** with graduated markings, disposable wipes **16**, protective underpads **18**, single doses of lubricating gel **20***a*, male **14** catheters **22**, antibacterial liquid soap **24**, clean catheter zipper bags **26**, a used catheter zipper bag **28**, alcohol gel **30**, a urine record card **32**, a lubricating gel tube **20**, a fanny pack **38**, a travel wipe pack **46**, illustrated step-by-step instructions documentation **34** as revealed by FIGS. **2**A and **2**B, and **3**A and **3**B, and self-care documentation **44**). It should be appreciated that system **10** could be provided to the patient in a box, tray, bag, container or any other suitable content holder device **40**. A box is preferred because it is strong enough to protect the contents of the system **10** and yet is suitable for shipping and storing. If a bag, tray, container or other content holding devices are used, a contents map **42** may or may not be included with system **10**.

In one preferred embodiment, a urologist, clinician or other medical professional provides system **10** to the user, although it is contemplated that the user could obtain system **10** through other means provided that a medical professional has ordered the system for the patient. System **10** includes extremely detailed and specific step-by-step instructions **34** as illustrated in FIGS. **2**A and **2**B that the user uses with the intermittent catheterization system **10** (specific step-by-step instructions in Spanish are illustrated in FIGS. **3**A and **3**B). System **10** also includes the self-care documentation **44** the medical professional uses to document or record the instructions provided to the user in the use of the intermittent male catheterization system **10** as illustrated in FIG. **4**. A difference between the two sets of instructions is that the instructions in FIG. **4** are black and white and include acknowledgment sections **45**A and **45**B while the instructions in FIGS. **2**A and **2**B are illustrated in color (not shown) for ease of use by the patient. It is also contemplated that system **10** could include an instructional video, training the user in the use of the system **10**.

In one preferred embodiment, system **10** includes sufficient apparatus for one month of male catheter insertions, the antibacterial soap **24** is in a liquid form, the lubricant **20** is provided in a gel or ointment form, and the step-by-step instructions **34**, and the contents map **42** (if included) are written in English. While not necessary, one preferred embodiment also includes one or more gloves **12**, disposable wipes **16** and a protective underpad **18**. It should be appreciated that a user could order a refill of the disposable apparatus of the present invention using an order form provided with the apparatus of the present invention.

In a more preferred embodiment of the system, system **10** includes apparatus for at least one month of catheterizations and comprises: (I) 10 gloves **12**; (II) 1 collection basin **14**; (III) 35 disposable wipes **16**; (IV) 3 protective underpads **18**; (V) 10 single tubes of lubricating gel **20**; (VI) 4 male intermittent catheters **22**; (VII) antibacterial liquid soap **24**; (VIII) 4 clean catheter zipper bags **26**; (IX) 1 used catheter zipper bag **28**; (X) 4 oz of alcohol gel **30**; (XI) 1 urine record card **32**; (XII) 1 lubricating gel tube **20**; (XIII) a fanny pack **38**; (XIV) 1 pack of travel wipes **46**; (XV) self-care documentation **44**; (XVI) detailed step-by-step instructions **34**; (XVII) a contents map **42**; and (XVIII) container or box **40** wherein the above-named items are positioned inside the box **40**.

The system **10** includes apparatus necessary for intermittent male catheterization in accordance with the method. The system **10** organizes the apparatus in an easy-to-find format. The step-by-step instructions **34** indicate when an item is first required during the method and should be removed from the container **40** (preferably using red text to indicate when an item is first required). Using the step-by-step instructions **34** and the contents map **42**, users can easily identify when each item is required in the method and readily find it in the container **40**. It should be appreciated that the items and step-by-step instructions **34** could be color coded and/or use icons making identifying each item even easier. For example, the antibacterial soap **24** could be identified by a bubbles icon and blue coloring corresponding to a bubbles icon and blue color in the step-by-step instructions **34**.

The method of the present invention generally comprises using the system **10** in accordance with the detailed step-by step instructions **34**. In a preferred embodiment, the method generally includes: (I) preparing for intermittent male catheterization; (II) preparing the male catheter; (III) inserting the male catheter; (IV) draining the bladder; (V) recording and disposing of the drainage; and (VI) removing the male catheter and cleaning and storing the apparatus.

Preparing for Intermittent Male Catheterization (Step I)

The first step of the method of the present invention, is illustrated by FIGS. **2**A and **2**B and includes preparing and caring for the male catheterization site. Preparing and caring for the catheterization site includes: (I) obtaining a clean, fresh towel; (II) washing using the antibacterial liquid soap **24** and warm water, and using the clean towel for drying; (III) finding a safe, flat, uncluttered, solid surface; (IV) putting on the gloves **12** only if the catheterization is being performed by a user other than the patient which includes: (a) taking a pair of gloves **12** out of the box **40**; and (b) putting them on; (V) preparing the surface which includes: (a) obtaining two clean, fresh paper towels; (b) opening the two paper towels; (c) placing the opened paper towels on the surface; (d) taking a protective underpad **18** out of the box **40**; (e) opening the protective underpad **18**; and (f) placing the opened protective underpad **18** under the patient's buttocks and near the opened paper towels; (VI) cleaning the catheter site which includes: (a) taking a paper wash cloth or disposable wipe **16** out of the box **40**; (b) taking the container of antibacterial soap **24**; (c) squeezing out approximately one or two drops of soap **24** onto the center of the wipe **16**; and (d) gently washing the site using the wipe **16**, the soap **24** and warm water; (VII) rinsing clean the wipe **16** which includes: (a) rinsing the wipe **16**; (b) squeezing out the excess water, leaving the wipe **16** damp; and (c) placing the damp wipe **16** on one corner of the paper towel; and (VIII) washing using the antibacterial soap **24** as described previously. It should be appreciated that step (VIII) can be skipped if the user is wearing gloves **12**. It is also contemplated that step I could include: (IX) preparing a waste bag comprising: (a) obtaining a waste bag; (b) opening the waste bag; and (c) setting the waste bag on the flat surface.

Preparing the Male Catheter (Step II)

The second step of the method as illustrated includes inserting the catheter **22** into the penis. Inserting the catheter **22** includes: (I) taking a catheter **22** out of the box **40**; (II) laying the catheter **22** on the paper towels; (III) take a collection basin **14** out of the box **40** and placing it near the paper towels; (IV) applying the lubricating gel **20** which includes: (a) taking the lubricating gel tube **20** out the box **40**; (b) flipping open the cap of the lubricating gel tube **20**; (c) squeezing 3 inches of lubricating gel **20** onto the catheter **22** starting at the tip, being careful not to touch the catheter **22** with the tube **20**; (d) rolling the catheter **22** in the lubricating gel **20** so that all sides are covered; (e) lifting the catheter **22** away from the paper towel and laying the wide end of the catheter **22** in the collection basin **14**; and (f) moving the basin **14** close to the user so that the wide end of the catheter **22** is not accidentally pulled out of the basin **14**.

Inserting the Male Catheter (Step III)

The third step of the present invention comprises inserting the catheter **22** into the penis. Inserting the catheter **22** comprises: (I) sitting on the underpad **18**; (II) holding the penis straight out with one hand; (III) pulling the penis away from the body keeping the urinary tract straight; (IV) inserting the catheter **22** until a bit (i.e., at least a drop) of urine appears; and (V) slowly pushing the catheter **22** in one inch more.

Draining the Bladder (Step IV)

The fourth step of the method comprises draining the site (i.e., the bladder) forming a drainage. Draining the bladder using the catheter **22** comprises: (I) placing or holding the basin **14** in proximity to the tip of the catheter **22**; (II) lowering the angle of the penis; (III) holding the catheter **22** in place and emptying the bladder into the basin **14**; and (IV) slowly pulling the catheter **22** out when the bladder is empty (i.e., the urine stops).

Recording and Disposing of the Drainage (Step V)

The next step of the method includes recording and disposing of the drainage. This step includes: (I) recording the amount of the drainage, including: (a) measuring the drainage level using the markings on the basin **14**; (b) writing this amount on the urine record card **32** illustrated in FIG. **5**; (c) noticing the color and smell of the drainage; and (d) recording the color and smell on the urine record card **32**; and (II) disposing of the drainage, preferably emptying the basin **32** in a toilet.

Cleaning and Storing the Apparatus (Step VI)

The next step includes completing the intermittent catheterization in accordance with the method. Completing the catheterization includes: (I) cleaning the used catheter, which includes: (a) washing the used catheter **22** with the antibacterial soap **24** and warm water; (b) holding the catheter **22** under running tap water, rinsing it well inside and out; (c) shaking the catheter **22** several times to remove any excess water; and (d) placing the catheter **22** on a clean, fresh paper towel to air dry; (II) removing any jelly left on the catheterization site using the damp wipe **16** (See Step I above); (III) cleaning the basin **14**, which includes: (a) washing the basin **14** using antibacterial soap **24** and warm water; (b) rinsing the basin with warm water; and (c) placing the basin **14** on clean, fresh paper towel to air dry; (IV) closing the cap on the lubricating gel tube **20**; (V) placing all the apparatus back in the box **40**; (VI) placing the dry catheter **22** inside a clean catheter zipper bag **26**, zipping it closed; (VII) placing the clean catheter zipper bag **26** in the box **40**; (VIII) placing the dry basin **14** in the box **40**; (IX) placing the underpad **18** in the box **40**; and (X) disposing of the wipe **16** and the paper towels, preferably using the waste bags.

It should be anticipated that the patient is not bed bound, but able and willing to get around. One preferred embodiment of the present invention includes a fanny pack **38** that enables users to travel. As illustrated in FIGS. **2**A and **2**B, method provides that, for every four hours of travel, the fanny pack **38** should include: (I) one clean catheter **22** in a clean catheter zipper bag **26**; (II) one packet of lubricating gel **20***a*; and (III) two clean paper towels. The fanny pack **38** should also include the pack of pre-wet travel wipes **46** and the used catheter zipper bag **28**.

When catheterization is required, the user should find a place (preferably a bathroom) and follow Steps I–VI above, using clean paper towels for a clean work surface. After removing the catheter **22** in Step V, rinse it off if possible and store it in the used catheter zipper bag **28**, placing the bag **28**

in the fanny pack **38**. Wash as described previously in Step I. The used catheters may be cleaned completely upon returning home.

The present invention includes teaching or instructing users in the use of system **10**. System **10** includes a set of extremely detailed instructions **34** and self-care documentation **44**, as illustrated in FIG. **4**. The self-care documentation is used by the medical care professional to instruct the users and for medical records.

Federal, state and local regulatory agencies require that the medical professional maintain complete records, including records to training provided to individuals. The medical care professional uses the self-care documentation **44** providing the instruction to the patient or user on the use the method and system **10** as illustrated in FIG. **4**. The self care documentation enables the medical care professional to ensure that the training is complete, providing a signature box or acknowledgment areas **45**A and **45**B for the user to indicate that they received and understand the instructions. This documentation **44** is maintained by the clinician or a medical provider as part of the clinical record, where they may be used for accreditation and/or legal purposes.

The present invention further contemplates a patient education system for educating users in performing intermittent male catheterization. The system includes the system **10** and the self-care documentation **44**. The present invention is only used on the order of a physician. An instructor (i.e., a doctor, nurse, clinician, other medical profession, or any individual trained to educate users in performing male catheterization) uses the self-care documentation **44** to train users to perform a male catheterization, preferably using the system **10**. The instructor takes the user through the process of performing a male catheterization, and may even demonstrate specific procedures using specific items in the system **10**. For example, it is contemplated that the instructor could demonstrate how to apply lubricating gel to the catheter **22**, clean the catheter **22**, record drainage, etc. It should be appreciated that the instructor could use a model to demonstrate how to insert the catheter **22**, drain the bladder and remove the catheter **22**.

It should be appreciated that the system **10** may contain sufficient apparatus for one or more catheter insertions; for example, apparatus for two, three, four or more months of catheter usage are contemplated. Further, it should be appreciated that refills for system **10** may be provided. In a preferred embodiment, a reorder form may be provided in system **10**.

While the present invention has been described in connection with what is presently considered to be the most practical and preferred embodiments, it is to be understood that the invention is not limited to the disclosed embodiments, but on the contrary is intended to cover various modifications and equivalent arrangements included within the spirit and scope of the claims. It is thus to be understood that modifications and variations in the present invention may be made without departing from the novel aspects of this invention as defined in the claims, and that this application is to be limited only by the scope of the claims.

What is claimed is:

1. A patient education system for educating a user in performing intermittent male catheterization, said system comprising:

a male catheterization system including:

(a) a plurality of gloves;

(b) a collection basin;

(c) a plurality of disposable wipes

(d) a plurality of protective underpads;

(e) a plurality of male catheters;

(f) lubricant gel;

(g) a plurality of clean catheter bags;

(h) a used catheter bag;

(i) a urine record card;

(j) a lubricating gel tube;

(k) step-by-step instructions for using items (a) to (j);

(l) a container wherein items (a) through (j) are positioned inside the container; and

self-care documentation an instructor uses to educate the user in performing intermittent male catheterization using the system.

2. The patient education system of claim **1**, wherein the self-care documentation includes at least one acknowledgement section for documenting instructions provided to the users.

3. An intermittent male catheterization system, said system comprising:

a plurality of infection prevention devices said infection prevention devices includes at least two gloves, at least one disposable wipe, at least one bag, alcohol gel, and a protective underpad;

at least one male catheterization device;

at least one recording device including a collection basin and a record card which enables a user to record an amount of drainage from a male catheter site;

at least one set of step-by-step instructions for using the infection prevention devices, male catheterization device and recording device;

self-care documentation including an acknowledgement section for documenting instructions provided to the user in the use of the system; and

a container for holding the system.

4. An intermittent male catheterization system for use by a user and containing apparatus for a plurality of male catheter insertions, said system comprising:

(a) a plurality of gloves;

(b) a collection basin;

(c) a plurality of disposable wipes

(d) a plurality of protective underpads;

(e) a plurality of male catheters;

(f) a lubricant gel;

(g) a plurality of clean catheter bags;

(h) a used catheter bag;

(i) a urine record card;

(j) a lubricating gel tube;

(k) a set of step-by-step instructions for using items (a) to (j); and

(l) a container wherein items (a) through (j) are positioned inside the container.

5. The system of claim **4**, which includes self-care documentation for documenting instructions provided to the user in the use of the system.

6. A patient education system for educating a user in performing intermittent male catheterization, said system comprising;

a male catheterization system including:

(a) a collection basin;

(b) a plurality of disposable wipes

(c) a plurality of male catheters;

(d) lubricant gel;

(e) a plurality of clean catheter bags;

(f) a used catheter bag;

(g) a urine record card;

(h) a lubricating gel tube;

(i) step-by-step instructions for using items (a) to (h);

(j) a container wherein items (a) through (h) are positioned inside the container; and

self-care documentation an instructor uses to educate the user in performing intermittent male catheterization using the system.

7. The patient education system of claim **6**, wherein the self-care documentation includes at least one acknowledgement section for documenting instructions provided to the users.

8. A intermittent male catheterization system, said system comprising:

a plurality of infection prevention devices said infection prevention devices includes at least one disposable wipe, at least one male catheter bag, and alcohol gel;

at least one male catheterization device;

at least one recording device including a collection basin and a record card which enables a user to record an amount of drainage from a male catheter site;

at least one set of step-by-step instructions for using the infection prevention devices, male catheterization device and recording device;

self-care documentation including an acknowledgement section for documenting instructions provided to user in the use of the system; and a container for holding the system.

9. An intermittent male catheterization system for use by a user and containing apparatus for a plurality of male catheter insertions, said system comprising:

(a) a collection basin;

(b) a plurality of disposable wipes

(c) a plurality of male catheters;

(d) a lubricant gel;

(e) a plurality of clean catheter bags;

(f) a used catheter bag;

(g) a urine record card;

(h) a lubricating gel tube;

(i) a set of step-by-step instructions for using items (a) to (h); and

(j) a container wherein items (a) through (h) are positioned inside the container.

10. The system of claim **9**, which includes self-care documentation for documenting instructions provided to the user in the use of the system.

* * * * *

EXHIBIT 9

US007662146B2

(12) **United States Patent**
House

(10) **Patent No.: US 7,662,146 B2**
(45) **Date of Patent: Feb. 16, 2010**

(54) **INDWELLING URINARY CATHETERIZATION ASSEMBLY**

(75) Inventor: **Jamie Glen House**, Colorado Springs, CO (US)

(73) Assignee: **Colorado Catheter Company, Inc.**, Colorado Springs, CO (US)

(*) Notice: Subject to any disclaimer, the term of this patent is extended or adjusted under 35 U.S.C. 154(b) by 101 days.

(21) Appl. No.: **11/652,528**

(22) Filed: **Jan. 12, 2007**

(65) **Prior Publication Data**

US 2007/0225687 A1 Sep. 27, 2007

Related U.S. Application Data

(60) Provisional application No. 60/780,972, filed on Mar. 10, 2006.

(51) **Int. Cl.**
A61M 25/10 (2006.01)
A61M 29/00 (2006.01)

(52) **U.S. Cl.** **604/544**; 604/103.05; 604/104; 604/915

(58) **Field of Classification Search** 604/103.05, 604/317, 544, 915
See application file for complete search history.

(56) **References Cited**

U.S. PATENT DOCUMENTS

1,120,549 A * 12/1914 Schellberg 604/171
2,009,825 A * 7/1935 Wappler 604/171
3,345,988 A * 10/1967 Vitello 604/172
3,421,509 A * 1/1969 Fiore 604/171
3,606,889 A * 9/1971 Arblaster 604/171
3,683,928 A * 8/1972 Kuntz 604/171
3,853,130 A * 12/1974 Sheridan 604/171
3,854,483 A * 12/1974 Powers 604/172
3,894,540 A * 7/1975 Bonner, Jr. 604/171
3,934,721 A * 1/1976 Juster et al. 206/364
3,937,220 A * 2/1976 Coyne 604/119
4,062,363 A * 12/1977 Bonner, Jr. 604/171
4,178,735 A * 12/1979 Jackson 53/473
4,327,723 A * 5/1982 Frankhouser 604/171
4,327,735 A * 5/1982 Hampson 604/171
4,392,853 A * 7/1983 Muto 604/171
4,540,404 A * 9/1985 Wolvek 604/103.05
4,551,137 A * 11/1985 Osborne 604/171
4,571,239 A * 2/1986 Heyman 604/544
4,622,033 A 11/1986 Taniguchi
4,634,433 A * 1/1987 Osborne 604/171
4,652,259 A * 3/1987 O'Neil 604/544
4,655,214 A * 4/1987 Linder 128/207.18
4,710,169 A * 12/1987 Christopher 604/104
4,738,666 A * 4/1988 Fuqua 604/514
4,772,275 A 9/1988 Erlich
4,798,193 A * 1/1989 Giesy et al. 600/114
4,811,847 A * 3/1989 Reif et al. 206/571
4,834,710 A 5/1989 Fleck
5,149,326 A 9/1992 Woodgrift et al.
5,181,913 A 1/1993 Erlich
5,234,411 A * 8/1993 Vaillancourt 604/171
5,239,981 A * 8/1993 Anapliotis 600/122
5,242,398 A 9/1993 Knoll et al.
5,306,241 A * 4/1994 Samples 604/544
5,334,153 A * 8/1994 McIntyre et al. 604/99.02

(Continued)

Primary Examiner—Tatyana Zalukaeva
Assistant Examiner—Paula L Craig
(74) *Attorney, Agent, or Firm*—Moazzam & Associates, LLC

(57) **ABSTRACT**

An indwelling urinary catheter assembly is disclosed having an indwelling catheter and a sheath enclosing an insertable portion of the indwelling catheter.

23 Claims, 7 Drawing Sheets

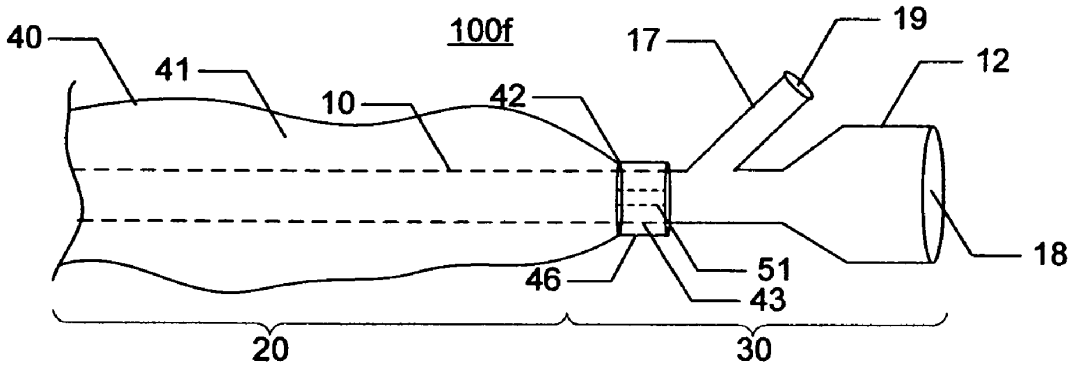

U.S. PATENT DOCUMENTS

5,582,599 A * 12/1996 Daneshvar 604/263
5,715,815 A * 2/1998 Lorenzen et al. 128/207.14
5,779,670 A 7/1998 Bidwell et al.
5,779,671 A * 7/1998 Ressemann et al. 604/164.13
5,792,114 A 8/1998 Fiore
5,895,374 A 4/1999 Rodsten
6,007,521 A * 12/1999 Bidwell et al. 604/264
6,053,905 A 4/2000 Daignault et al.
6,059,107 A 5/2000 Nosted et al.
6,090,075 A 7/2000 House
6,176,849 B1 1/2001 Yang et al.
6,217,569 B1 4/2001 Fiore
6,409,717 B1 6/2002 Israelsson et al.
6,471,684 B2 10/2002 Dulak et al.
6,578,709 B1 6/2003 Kavanagh et al.
6,602,244 B2 8/2003 Kavanagh et al.
6,634,498 B2 10/2003 Kayerod et al.
6,673,053 B2 1/2004 Wang et al.
6,736,805 B2 5/2004 Israelsson et al.
6,848,574 B1 2/2005 Israelsson et al.
2001/0001443 A1 5/2001 Kayerod et al.
2001/0007060 A1 7/2001 Fiore
2001/0027295 A1 10/2001 Dulak et al.
2001/0027299 A1 10/2001 Yang et al.
2002/0169438 A1 * 11/2002 Sauer 604/544
2003/0018302 A1 1/2003 Kavanagh et al.
2004/0074794 A1 4/2004 Conway et al.
2004/0153051 A1 8/2004 Israelsson et al.
2004/0256264 A1 12/2004 Israelsson et al.
2005/0015076 A1 1/2005 Giebmeyer et al.
2005/0085841 A1 * 4/2005 Eversull et al. 606/190
2005/0109648 A1 5/2005 Kerzman et al.
2005/0137582 A1 6/2005 Kull-Osterlin et al.
2006/0025753 A1 2/2006 Kubalak et al.
2007/0049907 A1 * 3/2007 Fischer et al. 604/544
2007/0161971 A1 * 7/2007 House 604/544
2007/0225649 A1 * 9/2007 House 604/171
2008/0091136 A1 * 4/2008 House 604/23
2008/0097411 A1 * 4/2008 House 604/544
2008/0147049 A1 * 6/2008 House et al. 604/544
2008/0171973 A1 * 7/2008 House 604/93.01
2008/0172042 A1 * 7/2008 House 604/544

* cited by examiner

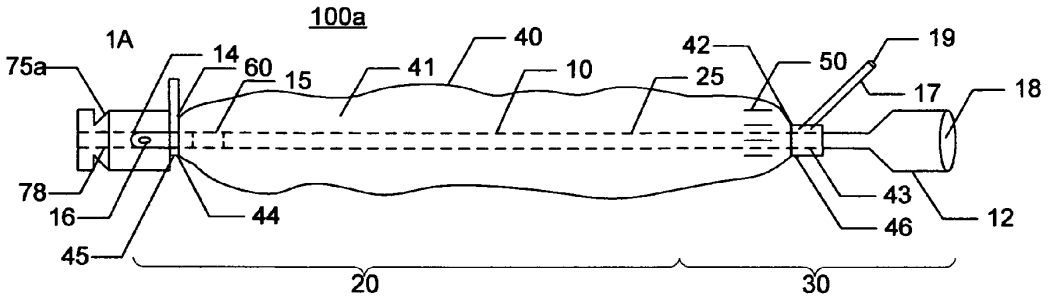

Fig. 1A

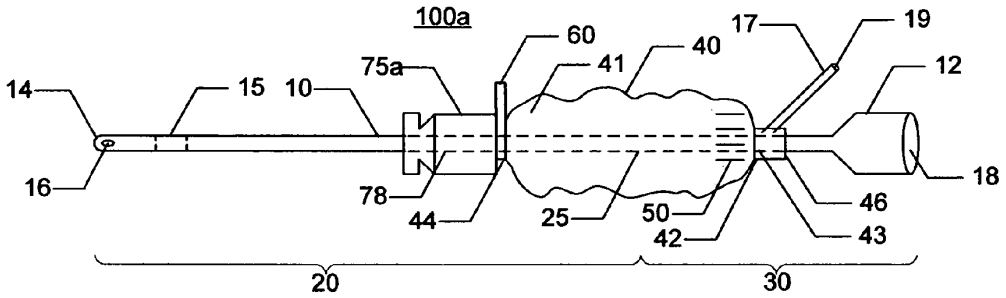

Fig. 1B

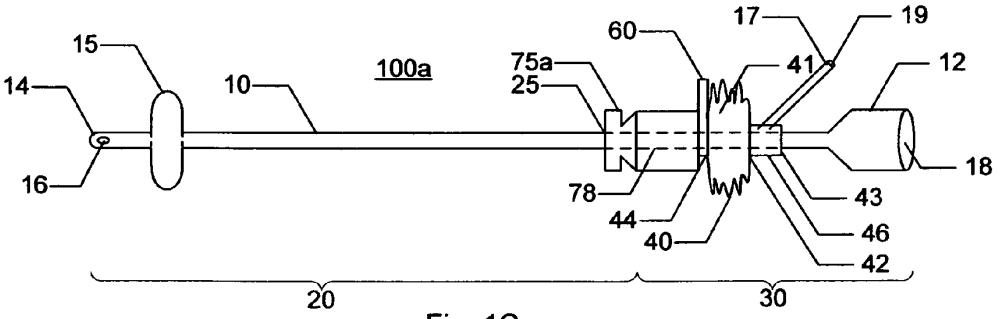

Fig. 1C

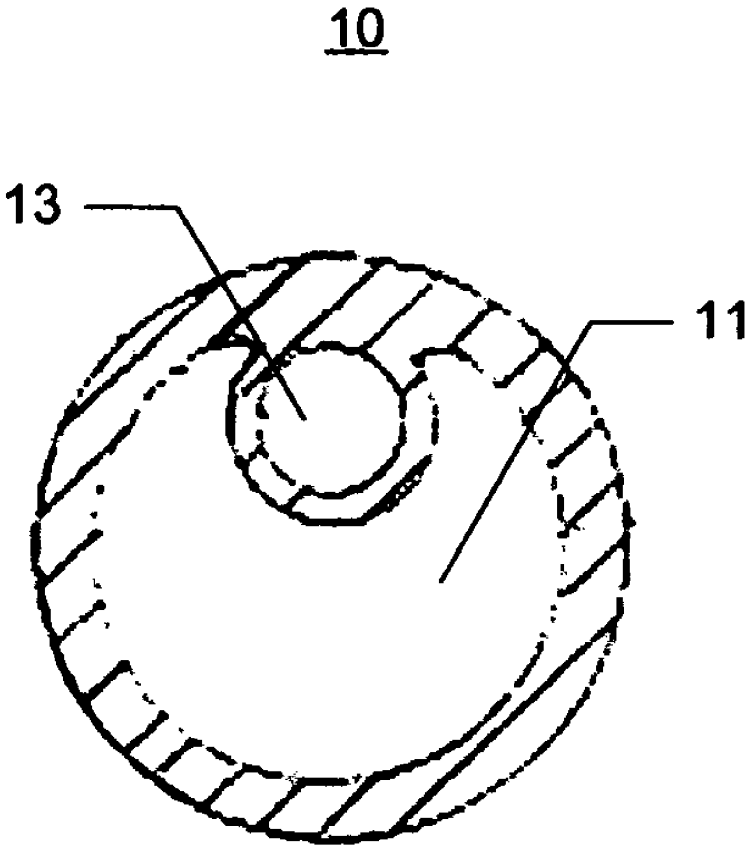

Fig. 1D

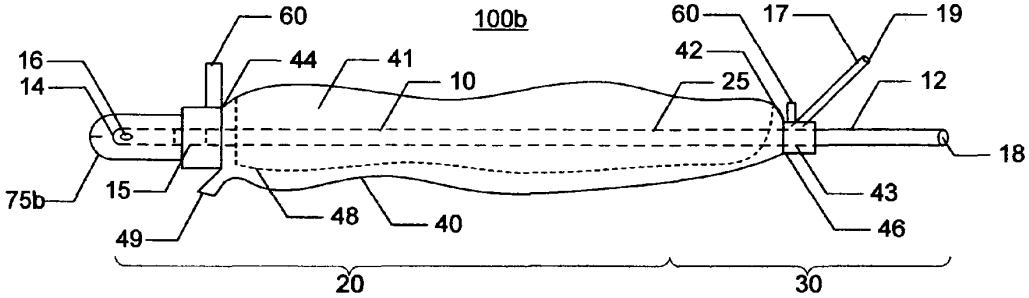

Fig. 2A

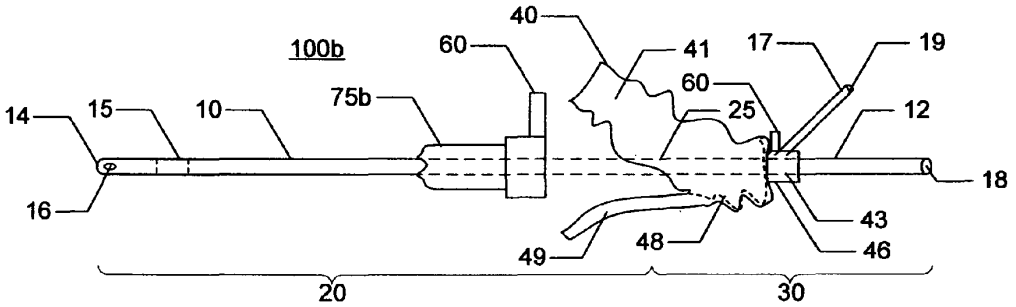

Fig. 2B

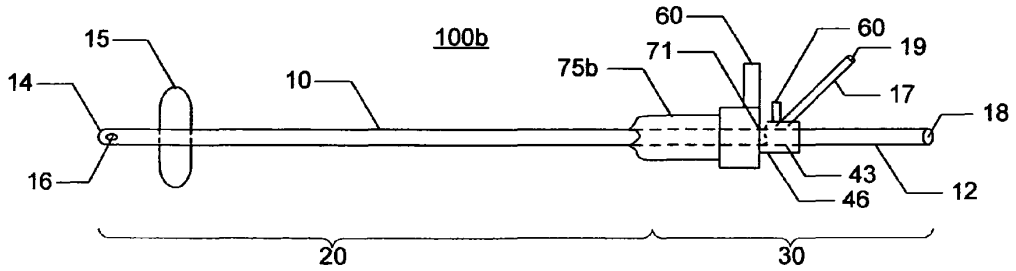

Fig. 2C

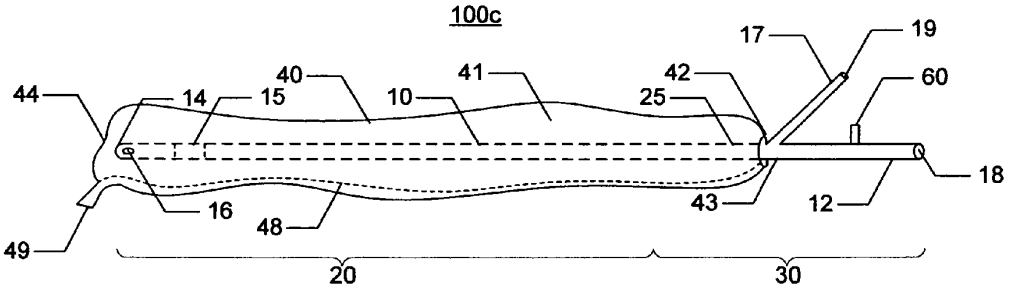

Fig. 3A

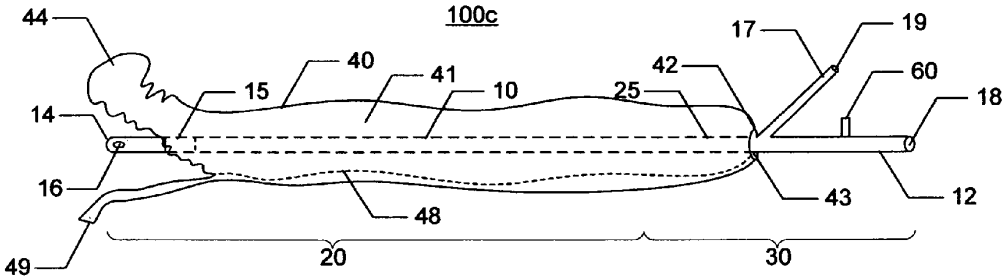

Fig. 3B

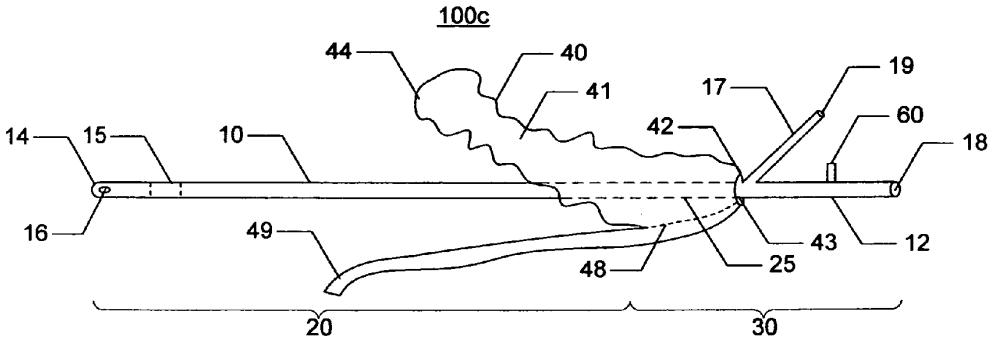

Fig. 3C

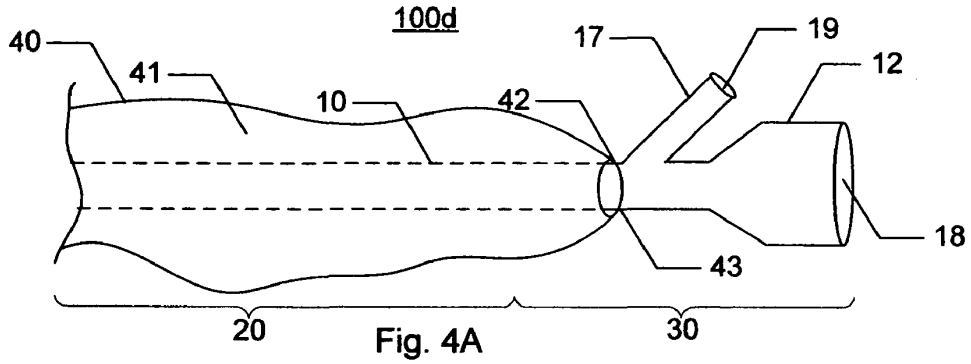

Fig. 4A

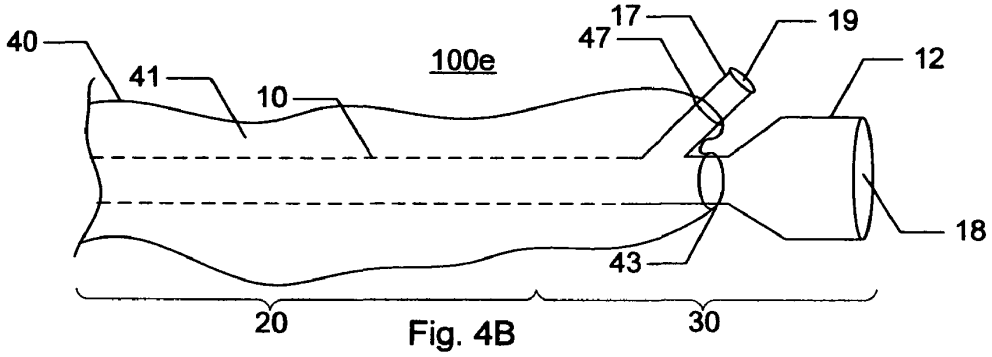

Fig. 4B

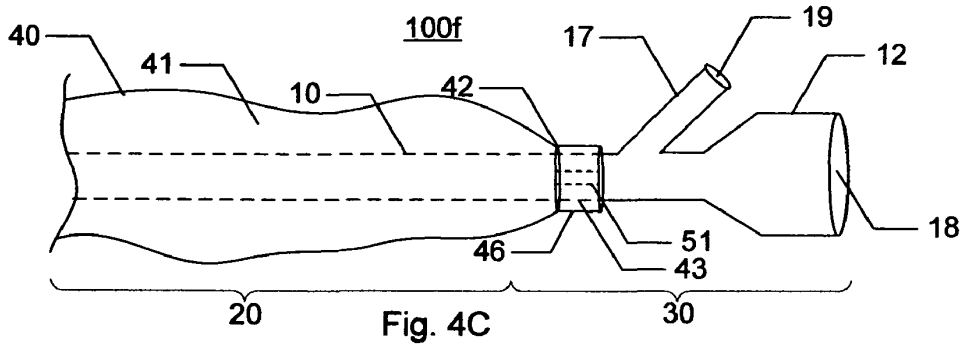

Fig. 4C

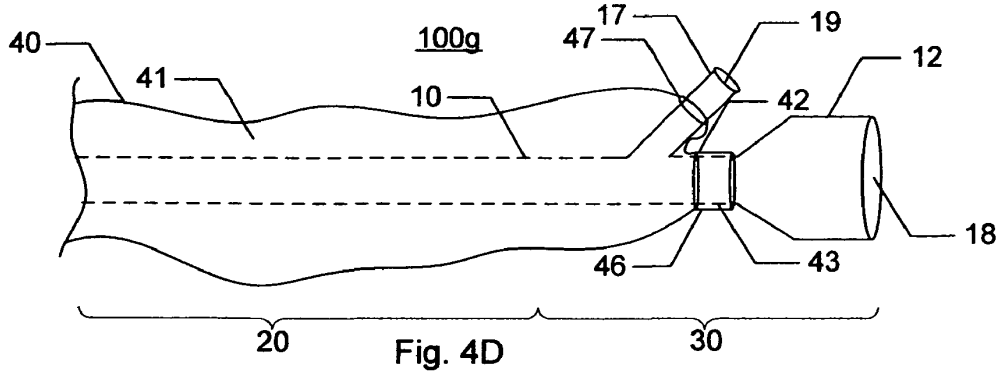

Fig. 4D

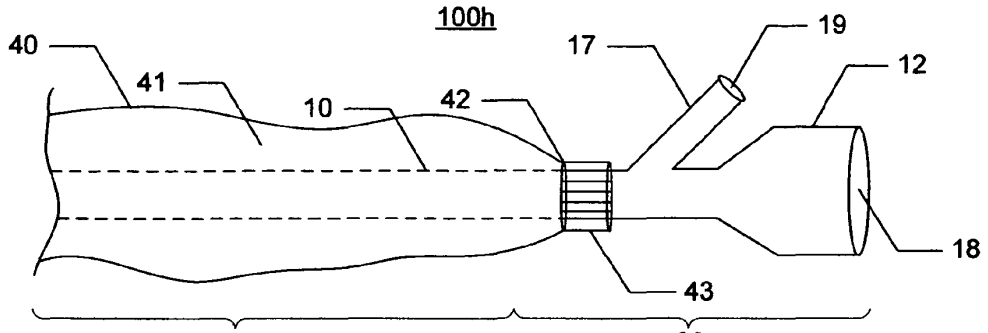

Fig. 4E

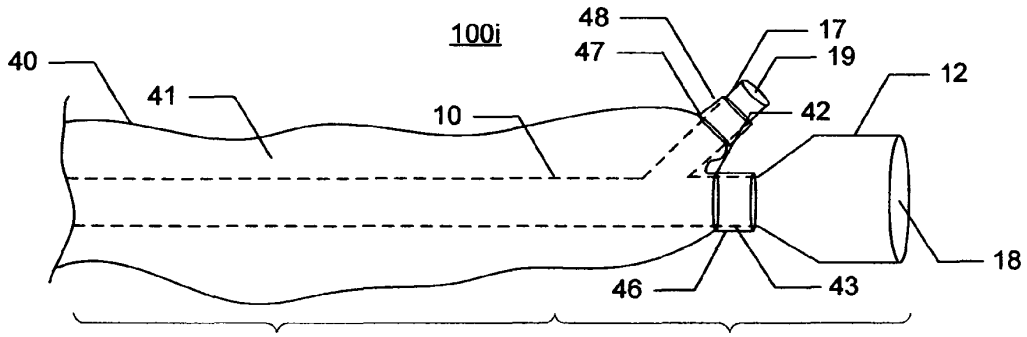

Fig. 4F

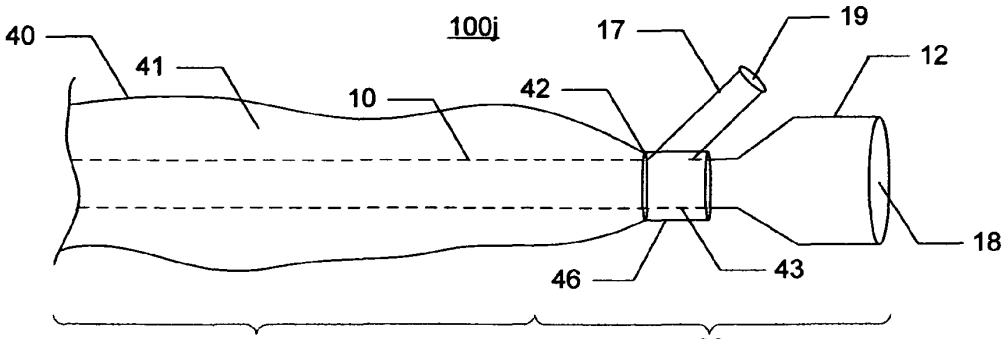

Fig. 4G

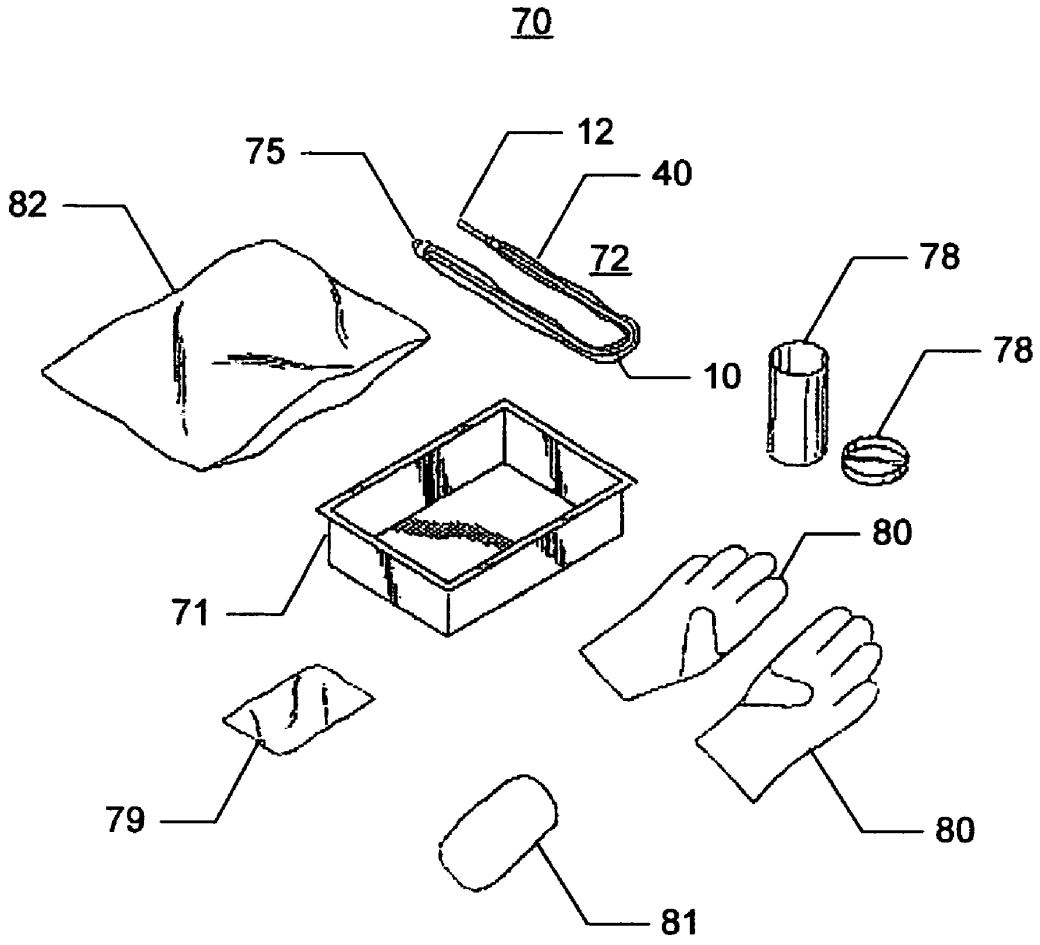

Fig. 5

INDWELLING URINARY CATHETERIZATION ASSEMBLY

This application claims priority to U.S. Provisional Patent Application Ser. No. 60/780,972, filed Mar. 10, 2006, the content of which is hereby incorporated by reference in its entirety into this disclosure.

BACKGROUND OF THE INVENTION

1. Field of the Invention

The present disclosure is directed to devices and methods for catheterization of the urinary bladder. More particularly, the present invention relates to devices and methods for extended or long-term catheterization of the urinary bladder.

2. Background of the Invention

The occasional or periodic catheterization of an individual's urinary bladder is a common practice today for many persons who are in a hospital setting, a nursing home, doctor's office, rehabilitation facility, or at home. For instance, a patient may be catheterized to treat such conditions as urinary retention, the inability to evacuate urine, or for the purpose of obtaining a sterile urine specimen from a patient in a doctor's office. Some catheterizations may be intermittent or repeated, while other catheterizations may be extended, or long-term. Extended catheterizations may require the use of an indwelling (e.g., "Foley") catheter.

Generally, catheterizations may be assisted (non self-catheterizations) or unassisted (self-catheterizations). In assisted catheterizations, it is commonplace for a nurse to perform the catheterization procedure using pre-assembled kits, or catheterization tray ("cath tray"), which typically includes a catheter, a drape, disposable gloves, antiseptic solution, cotton balls, a sealed packet containing sterile lubricating jelly, forceps, waterproof absorbent underpad, prepping cotton balls, a sterile urine specimen bottle, and a urine collection container. In particular, for long-term catheterizations, the catheter provided in the cath tray is typically an indwelling catheter capable of being sufficiently maintained within the patient for an extended period of time. All of these items are typically packaged together and sterilized.

To perform the typical catheterization, the nurse opens the tray, dons sterile gloves and places the drape around the patient's genitalia. The antiseptic solution is opened and poured over the cotton balls. The packet of lubricating jelly is opened and squeezed onto a sterile field. The patient's urethral opening is cleansed with the saturated cotton balls, the nurse holding each with the forceps. The nurse then runs the tip end of the catheter, comprising the first inch or two (about 2.5 cm to about 5 cm) of the insertable portion, through the lubricating jelly. The catheter is then inserted into the urethra and advanced until urine begins to flow. The urine is drained into the urine collection container. A urine specimen may be caught in the specimen bottle, if needed. For long-term catheterizations, a band around the tip of the indwelling catheter may be expanded such that the catheter may not be easily pulled from the bladder and is thus sufficiently maintained in the patient for an extended period of time. This basic procedure is widely used in inpatient hospitals around the world, and has remained essentially the same for 50 years.

Although the catheterization kit may be sterile prior to opening, the nurse must open the tray and handle the various items in the tray in order to use the kit. Further, even if special precautions are taken, maintaining a "sterile" environment during the procedure may present challenges. Non-sterile techniques and/or contamination of the catheter may result in infection of the patient's urinary tract. In some instances,

urinary tract infections may lead to morbidity and additional costs to the patient and society.

In addition to sanitation concerns, because multiple steps are involved to perform the procedure (e.g., sterilization, lubrication, insertion, etc.), a nurse may spend a significant amount of time (e.g., 10 minutes or more) carrying out each catheterization. Further, the "cath tray" procedure maybe expensive or otherwise impractical for use with some individuals and situations today.

A variety of catheterization kits and products are currently available. For instance, U.S. Pat. No. 6,090,075 (House I) discloses a catheterization kit including a catheter comprising a rigid introducer member for positioning catheter assembly against the urethral opening, a flexible catheter, and a flexible thin-walled sheath surrounding the catheter and partially covering the catheter introducer.

Some catheterization assemblies and kits employ hydrophilic catheters that are self-lubricating when wetted with a fluid (e.g., water) prior to use. U.S. Pat. No. 6,409,717 (Astra Aktiebolag) and U.S. Pat. No. 6,736,805 (AstraZeneca AB) describe apparatus for wetting a hydrophilic urinary catheter, comprising a wetting receptacle which defines a wetting fluid receiving area for receiving the catheter and a wetting fluid container having a discharge outlet movable from a closed position to an open position on application of a predetermined condition thereto to enable the wetting fluid to be discharged from the container. U.S. Pat. No. 6,634,498 (Coloplast A/S) describes certain urinary catheter assemblies including a urinary catheter having at least a part of its surface a hydrophilic surface layer intended to produce a low-friction surface character of the catheter by treatment with a liquid swelling medium during manufacture of the catheter assembly, and a catheter package having a cavity for accommodation of the catheter. The package includes a compartment having walls of a gas impermeable material that accommodates the liquid swelling medium, and a pre-treated catheter for long term preservation of the low-friction surface character and provision of a ready-to-use catheter assembly.

Some of the aforementioned catheter devices include a protective sheath that surrounds the catheter. Such a protective sheath may serve multiple purposes. For instance, the sheath may prevent contamination of catheter as the catheter is handled prior to and/or during use. In addition, in some hydrophilic catheters, the sheath may serve to contain a wetting agent used to lubricate the catheter during use. However, certain of the aforementioned catheter devices are intended for intermittent or short-term catheterizations and may not work adequately for long-term or extended catheterizations.

Accordingly, there remains a need for an easy-to-use, sanitary and disposable catheterization assembly for extended or long-term catheterizations.

SUMMARY OF THE INVENTION

An exemplary embodiment disclosed herein serves as an indwelling urinary catheter assembly. In certain embodiments, the indwelling catheter assembly comprises an indwelling catheter including a first end having a urine inlet, a second end having a urine outlet, a takeoff port having a port bore, an expander, and a urethra insertable portion. The urine inlet and urine outlet are in fluid communication, and the port bore and the expander are in fluid communication. In addition, the indwelling catheter assembly further comprises a pliable sheath comprising a lumen, wherein the sheath encloses all or part of the insertable portion.

The foregoing has broadly outlined certain features of the embodiments described herein in order that the detailed

description that follows may be better understood. Additional features will be described hereinafter. It should be appreciated by those skilled in the art that the conception and the specific embodiments disclosed may be readily utilized as a basis for modifying or designing other devices, methods, or systems for carrying out the same purposes of the embodiments disclosed herein. It should also be realized by those skilled in the art that such equivalent constructions do not depart from the spirit and scope of the invention as set forth in the appended claims.

BRIEF DESCRIPTION OF THE DRAWINGS

FIG. **1**A is a side view of an embodiment of a sheathed indwelling catheter assembly.

FIG. **1**B is a side view of the sheathed indwelling catheter assembly of FIG. **1**A, with the sheath partially gathered.

FIG. **1**C is a side view of the sheathed indwelling catheter assembly of FIG. **1**A, with the sheath substantially gathered.

FIG. **1**D is an enlarged cross-section of the indwelling catheter of FIG. **1**A.

FIG. **2**A is a side view of another embodiment of a sheathed indwelling catheter assembly.

FIG. **2**B is a side view of the sheathed indwelling catheter assembly of FIG. **2**A, with the sheath partially gathered and partially removed.

FIG. **2**C is a side view of the sheathed indwelling catheter assembly of FIG. **2**A, with the sheath completely removed.

FIG. **3**A is a side view of another embodiment of a sheathed indwelling catheter assembly.

FIG. **3**B is a side view of the sheathed indwelling catheter assembly of FIG. **3**A, with the sheath partially gathered and partially removed.

FIG. **3**C is a side view of the sheathed indwelling catheter assembly of FIG. **3**A, with the sheath substantially gathered and substantially removed.

FIG. **4**A is a partial side view of another embodiment of a sheathed indwelling catheter assembly.

FIG. **4**B is a partial side view of another embodiment of a sheathed indwelling catheter assembly.

FIG. **4**C is a partial side view of another embodiment of a sheathed indwelling catheter assembly.

FIG. **4**D is a partial side view of another embodiment of a sheathed indwelling catheter assembly.

FIG. **4**E is a partial side view of another embodiment of a sheathed indwelling catheter assembly.

FIG. **4**F is a partial side view of another embodiment of a sheathed indwelling catheter assembly.

FIG. **4**G is a partial side view of another embodiment of a sheathed indwelling catheter assembly.

FIG. **5** shows the contents of an indwelling catheterization kit according to an embodiment of the present invention.

DETAILED DESCRIPTION OF THE INVENTION

The present invention provides for catheter and catheter assemblies capable of mating with adhesive pads in order to increase a catheterized patient's mobility and prevent movement of the catheter in and out (pistoning) of

The following discussion is directed to various embodiments of the invention. Although one or more of these embodiments may be preferred, the embodiments disclosed should not be interpreted, or otherwise used, as limiting the scope of the disclosure, including the claims. In addition, one skilled in the art will understand that the following description has broad application, and the discussion of any embodiment is meant only to be exemplary of that embodiment, and not intended to intimate that the scope of the disclosure, including the claims, is limited to that embodiment.

Certain terms are used throughout the following description and claims to refer to particular system components. As one skilled in the art will appreciate, different persons may refer to a component by different names. This document does not intend to distinguish between components that differ in name but not function. The drawing figures are not necessarily to scale. Certain features of the invention may be shown exaggerated in scale or in somewhat schematic form, and some details of conventional elements may not be shown in interest of clarity and conciseness.

In the following discussion and in the claims, the terms "including" and "comprising" are used in an open-ended fashion, and thus should be interpreted to mean "including, but not limited to . . . . " Also, the term "couple" or "couples" is intended to mean either an indirect or direct connection. Thus, if a first device couples to a second device, that connection may be through a direct connection, or through an indirect connection via other devices and connections.

Also, the term "distal" is intended to refer to positions relatively away from the patient when the catheter is in use, while the term "proximal" is intended to refer to positions relatively near the patient when the catheter is in use. Thus, the proximal end of a device is relatively near the patient as compared to the distal end of the device, which is relatively away from the patient.

U.S. Pat. No. 6,090,075 (House I), U.S. App. No. 60/708,893 (House II), and U.S. application Ser. No. 11/326,699 (House III), and U.S. Provisional Application U.S. Express Mail Label No. EV 303424660 US, filed concurrently herewith, are each hereby incorporated herein by reference in their entirety.

Referring to FIG. **1**A, an embodiment of a sheathed indwelling catheter assembly **100***a* is shown. Assembly **100***a* comprises a flexible indwelling catheter **10** and a protective sheath **40**. Catheter **10** includes a urethra insertable portion **20** (portion insertable into a patient's urethra) and a non-insertable portion **30** (portion not intended to be inserted into the patient). Insertable portion **20** commences at a catheter tip **14** and ends at an insertion stop location **25**, adjacent non-insertable portion **30**.

Catheter **10** further comprises one or more urine inlet(s) **16** in tip **14**, a distal end **12** including a urine outlet **18**, and a urine conduit **11** in fluid communication with inlet(s) **16** and outlet **18**. In this configuration, when catheter **10** is sufficiently inserted into a patient's bladder, urine enters catheter **10** through inlet(s) **16**, is conducted through urine conduit **11** of catheter **10**, and exits catheter **10** at outlet **18**. Optionally, a urine collection bag or receptacle may be coupled to outlet **18** such that urine may exit outlet **18** into the collection bag.

In addition, catheter **10** comprises a takeoff port **17** having a port bore **19**, an expander conduit **13**, and an expander **15**. Port bore **19** is in fluid communication with expander **15** via expander conduit **13**. As with many indwelling catheters, fluid (e.g., sterile water, saline solution, air, etc.) may be injected into port bore **19** via takeoff port **17** to fill and expand expander **15**. In this manner, once catheter **10** is properly positioned in the bladder of the patient, expander **15** may be expanded (e.g., "ballooned") such that tip **14** of catheter **10** may be maintained within the patient's bladder for an extended period of time (e.g., tip **14** is not easily withdrawn from the patients bladder when expander **15** is expanded). Once the catheterization is no longer necessary, fluid may be withdrawn from expander **15** through port bore **19** and out of catheter **10**, thereby reducing the size of expander **15** such that catheter **10** may be removed from the patient. Port bore **19**,

expander conduit **13**, and expander **15** are not in fluid communication with inlet(s) **16**, urine conduit **11**, nor outlet **18**. In other words, there is no mixing of fluids within expander conduit **13** and urine conduit **11**. In select embodiments, takeoff port **17** is located in the distal ⅓rd of catheter **10**.

FIG. **1**D shows an enlarged cross-section of catheter **10** taken between expander **15** and takeoff port **17**. Expander conduit **13** allows fluid communication between expander **15** and port bore **19**. Further, urine conduit **11** allows fluid communication between one or more inlet(s) **16** and urine outlet **12**. However, as best seen in FIG. **1**D, there is no fluid communication between urine conduit **11** and expander conduit **13**.

Catheter **10** may be similar to conventional flexible indwelling catheters, sometimes referred to as "Foley" catheters. Catheter **10** may comprise any suitable material including without limitation, vinyl, red rubber latex, silicone elastomer, or the like.

Referring again to FIG. **1**A, catheter tip **14** initially rests inside, and is supported by, an introducer **75***a*. In this embodiment, introducer **75***a* is an introducer similar to that disclosed in House II. However, in other embodiments, the introducer enclosing tip **14** may be any suitable device capable of preventing direct contact of tip **14** with non-sterile surfaces. Introducer **75***a* slidingly receives catheter **10**. In particular, as best seen in FIGS. **1**A-**1**C, tip **14** and insertable portion **20** are intended to slide through introducer **75***a*, thereby advancing insertable portion **20** into the patient's urethra. Introducer **75***a* includes a conduit or guide **78** that controls the direction of motion of catheter **10**, including tip **14**, relative to introducer **75***a*.

Sheath **40** comprises a first sheath terminus **44** and a second sheath terminus **42**. First sheath terminus **44** comprises a first collar **45** coupled to introducer **75***a*. First sheath terminus **44** slidingly engages catheter **10**. First collar **45** is fixed to introducer **75***a* by first collar **45** such that first collar **45** does not move rotationally or translationally relative to introducer **75***a*. In different embodiments, first sheath terminus may not comprise a collar. Moreover, in other embodiments, first sheath terminus **44** may not be fixed to introducer **75***a* or any other device that covers tip **14**, if provided. Further, in certain embodiments, similar to that shown in FIGS. **2**A and B, first sheath terminus **44** is removably coupled to an introducer. Still further, in some embodiments (e.g., FIG. **3**A), first sheath terminus **44** completely encloses tip **14**.

Still referring to FIGS. **1**A-**1**C, in this embodiment second sheath terminus **42** comprises a second collar **46**. Second collar **46** is coupled to catheter **10** at an attachment point **43**. Attachment point **43** is provided between tip **14** and distal end **12**. Second collar **46** is coupled to catheter **10** at attachment point **43**, which straddles takeoff port **17**. However, in general, second sheath terminus **42** (e.g., second collar **46**) may be coupled to catheter **10** in any suitable location including without limitation, straddling takeoff port **17**, between tip **14** and takeoff port **17**, between takeoff port **17** and distal end **12**, or other locations.

In the embodiment shown in FIGS. **1**A-**1**C, second collar **46** is fixed to catheter **10** such that second collar **46** does not move rotationally or translationally relative to catheter **10**. However, in general, second sheath terminus **42** (e.g., second collar **46**) may be coupled to catheter **10** by any suitable means including without limitation, by heat fitting (e.g., partially melting second sheath terminus **42** to catheter **10**) (e.g., FIG. **4**E), by pressure fitting, by adhesive (e.g., glue), by a collar attached to second sheath terminus **42** and catheter **10** (e.g., FIG. **1**A), or combinations thereof. In different embodiments (e.g., FIG. **4**A), second sheath terminus **42** may slidingly engage catheter **10** at attachment point **43**.

As shown in FIGS. **1**A-**1**C, fixation tab **60** extends from first collar **45**. In other embodiments, no fixation tab **60** is provided. In general, fixation tab **60** serves to couple catheter **10** to the patient once tip **14** is properly positioned in the patient's bladder. Fixation tab **60** is discussed in more detail below.

Sheath **40** encloses all, or at least part of, insertable portion **20**, thereby creating a sheath lumen **41** between sheath **40** and catheter **10**. Sheath **40** may comprise any suitable material. For example, sheath **40** may be an elongated, flexible plastic membrane, such as a bag. Further, sheath **40** and lumen **41** may comprise any suitable geometry including without limitation, rectangular, cylindrical, flattened, inflated, partially inflated, or combinations thereof.

Together, introducer **75***a* (or other device covering tip **14**) and sheath **40** cooperate to enclose and protect insertable portion **20** of catheter **10** from contamination prior to and during use. In the embodiment shown in FIG. **1**A, insertable portion **20** of catheter **10** is maintained in sterile condition inside introducer **75***a* and sheath **40**. In embodiments where no introducer **75***a*, or other device covering tip **14**, is provided (e.g., FIG. **3**A), insertable portion **20** of catheter **10** may be fully enclosed within sheath **40** and thereby maintained in sterile condition.

The urethra-insertable portion **20** of catheter **10** is generally the length of catheter that may be appropriately inserted into the patient's urethra in order to perform a successful catheterization to drain the patient's urinary bladder. In select embodiments, insertable portion **20** is about ⅔rd the length of catheter **10**. The actual length of catheter **10**, and the length of the insertable portion **20**, may depend on the application (e.g., adult or child size) and may also vary somewhat from one patient to another. As a practical matter, insertable portion **20** is decreased, at least to some extent, by the distance on catheter **10** required to accommodate introducer **75***a* (if provided) and sheath **40** when sheath **40** is gathered toward second sheath terminus **42**.

As discussed below in more detail (see "Catheterization Procedure"), during use of assembly **100***a*, flexible sheath **40** is gathered toward second sheath terminus **42** in order to advance tip **14** and insertable portion **20** into the patient's urethra Thus it can be readily appreciated that, in some embodiments, less than all of catheter **10** protected by the sheath **40** may be needed for insertion into the patient. Accordingly, an insertion stop location **25** (where the catheter stops near the urethral opening upon establishment of urine flow) may substantially coincide with attachment point **43**, or it may be spaced away from attachment point **43** (e.g., closer to tip **14**).

FIG. **1**A shows the urethra-contacting end of assembly **100***a* (proximal end of assembly **100***a*) as including an introducer **75***a*. However, in general, the proximal end of assembly **100***a* may comprise any suitable configuration. For example, in some embodiments, introducer **75***a* may be replaced with another type of introducer or tip cover to keep sterile at least the insertable portion **20** of the catheter **10** prior to insertion. In other embodiments, introducer **75***a* or other tip cover may be similar to those that are known in the art. For example, the introducer may comprise an O'Neil® type introducer with "cross-cut" end (e.g., FIG. **2**A-**2**C) or an introducer similar to that disclosed in House II. Embodiments of an O'Neil® type introducer are disclosed in U.S. Pat. No. 4,652,259, which is hereby incorporated herein by reference in its entirety. Further, introducer **75***a* or other tip cover may be removable from catheter **10** and/or slidingly engage catheter **10** (e.g., be slid

toward distal end **12** to advance insertable portion **20** as shown in FIGS. **1**B and C). Still further, in some embodiments (e.g., FIG. **3**A), catheter **10** may be provided without introducer **75***a* or other tip cover, and sheath **40** may completely or partially enclose insertable portion **20** of catheter **10**. Additional suitable configurations for the proximal end of assembly **100***a* are disclosed in House I, House II, and House III, which are each hereby incorporated by reference in their entirety.

In use, it may be desirable to lubricate tip **14** and a proximal portion insertable portion **20** prior to advancing tip **14** into the patient's urethra. Thus, in some embodiments, introducer **75***a* (or other protective tip cover) and/or lumen **41** of sheath **40** may contain a lubricant, or a wetting agent in the case of a hydrophilic indwelling catheter. Alternatively, tip **14** and a proximal portion of insertable portion **20** may be lubricated by applying a sterile lubricating gel.

Still referring to FIGS. **1**A-**1**C, during use, a nurse may grasp introducer **75***a* and/or catheter **10** through flexible sheath **40** near the tip end **14** and align the catheter tip **14** with the patient's urethra. The nurse may then push tip **14** through introducer **75***a* and advance catheter tip **14** into the patient's urethra. In embodiments that do not include an introducer **75***a* or other tip cover (e.g., FIGS. **3**A and B), a portion of sheath **40** near tip **14** may need to be opened to allow catheter tip **14** to emerge.

Sheath **40** is gathered toward distal end **12** to further advance catheter tip **14**, giving catheter assembly **100***a* an appearance similar to that shown in FIG. **1**B. As the catheter tip **14** is advanced by the nurse, a portion of sheath **40** becomes gathered toward second sheath terminus **42**. By appropriately repositioning the nurse's grasp on introducer **75***a* and/or catheter **10** through sheath **40**, and continuing to gently urge the insertable-portion **20** of catheter **10** in the patient's urethra, sheath **40** may continue to be gathered toward distal end **12**, giving catheter assembly **100***a* an appearance similar to that shown in FIG. **1**C. When the catheter tip enters the patient's bladder a sufficient distance to commence optimal draining of accumulated urine (e.g., about 1 cm), further insertion of insertable portion **20** ceases. At this point, the nurse may inflate expander **15** by injecting a fluid (e.g., sterile water, saline solution) into port bore **19** provided in takeoff port **17**. In some embodiments, expander **15** may be inflated by injecting 5-10 cc of fluid. Once expander **15** is inflated, as best seen in FIG. **1**C, to facilitate proper retention of catheter **10** in the patient's urethra for an extended period of time. Further, once tip **14** is properly positioned within the patient's bladder for extended catheterization, fixation tab **60** may be coupled to the patient. By coupling fixation tab **60** to the patient, catheter **10** may be maintained in a proper orientation, and further, introducer **75***a* and sheath **40** may be maintained in the gathered position shown in FIG. **1**C. A urine collection bag or receptacle (not shown) may be employed to provide storage for drained urine.

Thus, introducer **75***a* and sheath **40** cooperate to protect insertable portion **20** from contamination prior to and during use. For example, before use, introducer **75***a* and sheath **40** completely enclose insertable portion **20** of catheter **10**. In addition, during use, introducer **75***a* and sheath **40** are pulled back by the nurse as insertable portion **20** is advanced into the patient, without the need for the nurse to directly contact insertable portion **20**, the nurse instead grasping the portion of catheter **10** that is enclosed within sheath **40**. By deterring contamination, introducer **75***a* and sheath **40** may reduce the occurrences of urinary tract infections in patients. Further, by using introducer **75***a* and sheath **40** to maintain a sterile catheter, the need for separate antiseptic solutions, cotton balls, forceps and other devices conventionally used to maintain the sterility of an indwelling catheter may be eliminated. By eliminating these additional items required to maintain sterility of an indwelling catheter, embodiments of the sheathed indwelling catheter assembly described herein are intended to reduce the cost for indwelling catheter kits, reduce the time required to perform an indwelling catheterization, and reduce urinary tract infections.

In some catheter assemblies, the process of gathering sheath **40** to advance insertable portion **20** may result in an increase in pressure (e.g., a pressure build-up) in lumen **41**. This may particularly be a problem with catheter assemblies in which there is limited or no means to relieve pressure build-up within lumen **41** (e.g., no fluid communication between lumen **41** and the environment outside sheathed catheter assembly **100***a*). Without being limited by theory, as the flexible sheath **40** is gathered, the volume of lumen **41** may decrease. In embodiments in which lumen **41** is not in fluid communication with a collection bag or an environment outside sheath **40**, some fluid contained within lumen **41** (e.g., air, wetting agent, etc.) may become trapped and compressed, resulting in a pressure buildup within lumen **41** (e.g., sheath **40** may "balloon-up"). Excessive pressure buildup within lumen **41** may result in undesirable consequences. For instance, excessive pressure in lumen **41** may create forces tending to push introducer **75***a* towards tip **14**, thereby limiting the degree to which the catheter may be advanced into the urethra. In addition, pressure build-up may cause sheath **40** to "balloon up," thereby detrimentally affecting the ability of the user to grasp the catheter **10** through the sheath **40**. To help relieve pressure build-up within lumen **41**, one or more vents **50** may be provided in assembly **100***a* as shown in FIG. **1**A. Vents **50** are in fluid communication with lumen **40** and an environment outside sheath **41** and thus allow compressed fluid (e.g., air) within lumen **41** to escape lumen **41**. In the embodiment shown in FIGS. **1**A-**1**C, vents **50** are provided in sheath **40**. However, in other embodiments, vents **50** may be provided in any suitable location including without limitation, sheath **40**, first sheath terminus **44**, second sheath terminus **42**, introducer **75***a*, or combinations thereof. Still further, although vents **50** shown in FIG. **1**A are slits, vents **50** may be any suitable geometry including without limitation slits, perforations, holes, pores, or combinations thereof. Vents **50** are preferably located adjacent second sheath terminus **42** in the region of non-insertable portion **30**, such that any possible contamination of catheter **10** via vents **50** will occur as far from insertable portion **30** as possible. Additional suitable embodiments of vents are disclosed in U.S. Provisional Patent Application EV 303424660 US.

Referring to FIG. **2**A, another embodiment of a sheathed indwelling catheter assembly **100***b* is illustrated. Assembly **100***b* comprises a flexible indwelling catheter **10** and a protective sheath **40**. Indwelling catheter **10** includes a urethra insertable portion **20** and a non-insertable portion **30**. Insertable portion **20** commences at a catheter tip **14** and ends at an insertion stop location **25**, adjacent non-insertable portion **30**. Catheter **10** may be similar to conventional flexible indwelling catheters.

Catheter tip **14** initially rests inside, and is supported by, an introducer **75***b*. In this embodiment, introducer **75***b* is similar to an O'Neil® type introducer. However, in other embodiments, the proximal end of catheter **10** may be enclosed or covered by another type of introducer (e.g., introducer **75***a* in FIG. **1**A), a removable tip cover, or the like. As shown in FIGS. **2**A-**2**C, introducer **75***b* slidingly engages catheter **10**. In particular, introducer **75***b* is intended to slide along insertable portion **20**, thereby exposing insertable portion **20** such

that it may be inserted and advanced into the urethra of the patient. Introducer **75***b* may include a guide to aid in aligning tip **14** and controlling the direction of catheter **10**, including tip **14**.

Sheath **40** comprises a first sheath terminus **44** and a second sheath terminus **42**. First sheath terminus **44** is removably coupled to introducer **75**. Second sheath terminus **42** is removably coupled to a second collar **46**. Second collar **46** is coupled to catheter **10** at attachment point **43**. Attachment point **43** is provided between tip **14** and distal end **12**. In particular, attachment point **43** is positioned about takeoff port **17** such that second collar **46** straddles takeoff port **17**. By straddling takeoff port **17**, second collar **46** is effectively fixed to catheter **10** such that second collar **46** does not move rotationally or translationally relative to catheter **10**. In general, second sheath terminus **42** may be coupled to catheter **10** by any suitable means, including without limitation, by heat fitting (e.g., partially melting second sheath terminus **42** to catheter **10**), by pressure fitting, by adhesive (e.g., glue), by a collar attached to second sheath terminus **42** and catheter **10**, or combinations thereof.

A fixation tab **60** extends from introducer **75***b*. Further a second fixation tab **60** extends from second collar **46**. In other embodiments, no fixation tab **60** is provided. In general, fixation tab **60** serves to couple catheter **10** to the patient once tip **14** is properly positioned in the patient's bladder. Fixation tab **60** is discussed in more detail below.

Sheath **40** encloses all, or at least part of, insertable portion **20**, thereby creating a sheath lumen **41** between sheath **40** and catheter **10**. Sheath **40** may comprise any suitable material (e.g., flexible plastic material, flexible fabric material, or the like). Further, sheath **40** and lumen **41** may comprise any suitable geometry including without limitation, rectangular, cylindrical, flattened, inflated, partially inflated, or combinations thereof.

In the embodiment shown in FIGS. **2**A and **2**B, sheath **40** further comprises a pull tab **49** associated with a tear line **48**. Pull tab **49** may be provided at any suitable position on sheath **40**, however, preferably pull tab **49** is positioned near the proximal end of sheath **40**. Tear line **48** may be a pre-weakened (e.g., very thin, slightly perforated, etc.) line along sheath **40** that is intentionally provided therein to permit the sheath to tear under a slight to moderate force. Tear line **48** is intended to tear as pull tab **49** is pulled away from sheath **40**. In particular, tear line **48** is intended to tear under force applied to pull tab **49** before any other region of sheath **40** tears. Tearing sheath **40** along tear line **48** permits sheath **40** to be removed from its position disposed about catheter **10**.

Together, introducer **75***b* and sheath **40** cooperate to enclose and protect insertable portion **20** of catheter **10** from contamination prior to and during use. In the embodiment shown in FIG. **2**A, insertable portion **20** of catheter **10** is maintained in sterile condition inside introducer **75***b* and sheath **40**.

As discussed above, the urethra-insertable portion **20** of catheter **10** is generally the length of catheter that may be appropriately inserted into the patient's urethra in order to perform a successful catheterization to drain the patient's urinary bladder. As a practical matter, insertable portion **20** is decreased, at least to some extent, by the distance on catheter **10** required to accommodate introducer **75***b*, if provided, as introducer **75***b* is gathered towards second collar **46**. In different embodiments, the introducer (e.g., introducer **75***a*, introducer **75***b*) or other tip cover may be designed to be completely removed from catheter **10** such that the introducer or tip cover does not take up space on catheter **10**. For example, the introducer may be designed to be a "breakaway" introducer. In addition, in the embodiment shown in FIGS. **2**A-**2**C, gathering sheath **40** towards distal end **12** does not have the effect of decreasing or limiting the length of catheter **10** serving as insertable portion **20** because sheath **40** may be removed from catheter **10** as it is gathered toward second collar **46** (see FIGS. **2**B and **2**C).

FIGS. **2**A-**2**C show the urethra-contacting end of assembly **100***b* (proximal end of catheter **10**) as including an introducer **75***b*. However, in general, the proximal end of catheter **10** may comprise any suitable configuration. In some embodiments, introducer **75***b* may be similar to those that are known in the art. For example, in some embodiments the proximal end of catheter **10** may be enclosed or covered by an introducer similar to that disclosed in FIG. **1**A or other type of protective tip cover capable of keeping at least the insertable portion of the catheter sterile prior to and during use.

As discussed above, in use, it may be desirable to lubricate tip **14** and a proximal portion of insertable portion **20** prior to advancing tip **14** into the patient's urethra. Thus, in some embodiments, introducer **75***b* and/or lumen **41** of sheath **40** may contain a lubricant or wetting agent in the case of a hydrophilic indwelling catheter. Alternatively, a sterile lubricating gel may be applied to tip **14** and a proximal portion of insertable portion **20** prior to insertion.

Referring to FIGS. **2**A-**2**C, during use, a nurse may grasp introducer **75***b* and align introducer **75***b* and catheter tip **14** with the patient's urethra. The nurse may then push the proximal tip of introducer **75***b* into the patient's urethra approximately 1-2 cm. Then the nurse may grasp catheter **10** through sheath **40** and advance tip **14** through introducer **75***b* and into the patient's urethra.

As insertable portion **20** is advanced into the patient's urethra, a portion of sheath **40** may become gathered toward second sheath terminus **42**. At some point, the nurse may begin pulling on pull tab **49** to start tearing sheath **40** along tear line **48** as best illustrated in FIG. **2**B. The nurse may begin tearing sheath **40** along tear line **48** when introducer **75***b* is positioned ⅓ to ½ the way down insertable portion **20**, or when tip **14** is sufficiently in the patient's bladder.

By appropriately repositioning the nurse's grasp on introducer **75***b* and/or catheter **10** through sheath **40**, and continuing to gently urge the insertable-portion **20** of catheter **10** into the patient's urethra, sheath **40** may continue to become gathered toward second sheath terminus **42**. Periodically, the nurse may further pull pull tab **49** to continue tearing sheath **40** along tear line **48**. When the catheter tip enters the patient's bladder a sufficient distance to commence optimal draining of accumulated urine (e.g., about 1 cm), further insertion of insertable portion **20** is halted. At this point, the nurse may inflate expander **15** by injecting a fluid (e.g., sterile water, saline solution) into port bore **19** provided in takeoff port **17**. If sheath **40** has not been removed by this point, the nurse may remove the remainder of sheath **40** may be removed from catheter **10** by pulling on pull tab **49**. Further, once tip **14** is properly positioned within the patient's bladder and sheath **40** is completely removed from catheter **10**, introducer **75***b* may be secured in position adjacent collar **46** as illustrated in FIG. **2**C. In some embodiments, introducer **75***b* may be coupled to second collar **46** at attachment point **71**. In such embodiments, introducer **75***b* may be coupled to second collar **46** by any suitable means including without limitation, a locking mechanism, an adhesive, or combinations thereof. In addition, fixation tab **60** may be employed to couple catheter **10** to the patient. By coupling fixation tab **60** of introducer **75***b* to the patient, catheter **10** may be maintained in a proper orientation, and further introducer **75***b* may be maintained in gathered position shown in FIG. **2**C.

Thus, introducer **75***b* and sheath **40** may prevent contamination of insertable portion **20** of indwelling catheter **10** prior to and during use. For example, before use, introducer **75***b* and sheath **40** completely enclose insertable portion **20** of catheter **10**. In addition, during use, introducer **75***b* and sheath **40** are pulled back by the nurse as insertable portion **20** is advanced into the patient, without the need for the nurse to directly contact insertable portion **20**. By deterring contamination, introducer **75***b* and sheath **40** may reduce the occurrences of urinary tract infections in patients. Further, by using introducer **75***b* and sheath **40** to maintain a sterile catheter, the need for separate antiseptic solutions, cotton balls, forceps and other devices conventionally used to sterilize an indwelling catheter may be eliminated. By eliminating these additional items required to maintain sterility of an indwelling catheter, embodiments of the sheathed indwelling catheter assembly described herein are intended to reduce the cost for indwelling catheter kits, reduce the time required to perform an indwelling catheterization, and reduce urinary tract infections.

As previously discussed, if pressure build-up within lumen **41** is a concern, vents in fluid communication with lumen **41** and the environment outside sheath **40** may be provided.

Referring to FIG. **3**A, another embodiment of a sheathed indwelling catheter assembly **100***c* is illustrated. Assembly **100***c* comprises a flexible indwelling catheter **10** and a protective sheath **40**. Indwelling catheter **10** includes a urethra insertable portion **20** and a non-insertable portion **30**. Insertable portion **20** commences at a catheter tip **14** and ends at an insertion stop location **25**, adjacent non-insertable portion **30**.

Catheter tip **14** is completely enclosed within sheath **40**. No introducer or tip cover is provided. In different embodiments, an introducer or tip cover may be provided on tip **14** and inside sheath **40**. In such embodiments, the introducer or tip cover may be completely removable from tip **14** (e.g., removable in a "breakaway" fashion) and/or be configured to slide along catheter **10** from tip **14** toward insertion stop location **25** thereby extending insertable portion **20**. Such an introducer may comprise any suitable device including without limitation an introducer similar to that shown in FIG. **1**A, an O'Neil® type introducer (e.g. FIG. **2**A), or the like.

Referring again to FIG. **3**A, sheath **40** comprises a first sheath terminus **44** and a second sheath terminus **42**. First sheath terminus **44** extends beyond tip **14** and completely encloses and protects tip **14**. Second sheath terminus **42** is coupled to catheter **10** at attachment point **43**. Attachment point **43** is provided between tip **14** and distal end **12**. Second sheath terminus **42** slidingly engages catheter **10** about attachment point **43**. In the embodiment shown in FIGS. **3**A-**3**C, attachment point **43** is proximal takeoff port **17**, however, in different embodiments (e.g., FIG. **4**B), attachment point **43** may be distal to takeoff port **17**. In still other embodiments, second sheath terminus **42** may comprise a collar that slidingly engages or is fixed to catheter **10** (e.g., FIG. **4**C).

A fixation tab **60** extends from distal end **12**, distal to takeoff port **17**. In general, fixation tab **60** serves to couple catheter **10** to the patient once tip **14** is properly positioned in the patient's bladder. Fixation tab **60** is discussed in more detail below.

Sheath **40** encloses all, or at least part of, insertable portion **20**, thereby creating a sheath lumen **41** between sheath **40** and catheter **10**. Sheath **40** may comprise any suitable material (e.g., flexible plastic material, flexible fabric material, or the like). Further, sheath **40** and lumen **41** may comprise any suitable geometry including without limitation, rectangular, cylindrical, flattened, inflated, partially inflated, or combinations thereof.

In the embodiment shown in FIGS. **3**A-**3**C, sheath **40** further comprises a pull tab **49** associated with a tear line **48**. Pull tab **49** may be provided in any suitable location. However, preferably pull tab **49** is positioned at the proximal end of sheath **40**. Tear line **48** may be a pre-weakened (e.g., very thin, slightly perforated, etc.) line along sheath **40** that is intentionally designed to tear under a force before any other region of sheath **40** tears under the force. In particular, tear line **48** is intended to tear as pull tab **49** is pulled away from sheath **40**. By enclosing insertable portion **20**, sheath **40** is provided to protect catheter **10** from contamination prior to and during use.

As discussed above, the urethra-insertable portion **20** of catheter **10** is generally the length of catheter that may be appropriately inserted into the patient's urethra in order to perform a successful catheterization to drain the patient's urinary bladder. In embodiments in which an introducer is slid along catheter **10** towards distal end **12** to extend insertable portion **20**, the length of the insertable portion **20** may be effectively decreased, at least to some extent, by the distance on catheter **10** required to accommodate such an introducer or tip cover. Further, in embodiments in which sheath **40** is gathered and not removed from catheter **10**, the length of the insertable portion **20** may be additionally decreased, at least to some extent, by the distance on catheter **10** required to accommodate gathered sheath **40**. However, in the embodiments shown in FIGS. **3**A-**3**C, no introducer or tip cover is provided, and further, sheath **40** is removable from catheter **10**. Thus, in the embodiment illustrated in FIGS. **3**A-**3**C, the length of catheter **10** that serves as insertable portion **20** is not decreased by sheath **40** or an introducer or other tip cover.

As discussed above, in some embodiments, lumen **41** of sheath **40** may contain a lubricant or wetting agent in the case of a hydrophilic indwelling catheter. Further, in some embodiments, a sterile lubricating gel may be applied to tip **14** and a proximal portion of insertable portion **20**.

Still referring to FIGS. **3**A-**3**C, during use, a nurse may grasp catheter **10** through sheath **40** and exert a force on pull tab **49** to slightly tear sheath **40** along tear line **48** near tip **14**, such that tip **14** is exposed from sheath **40**, as best seen in FIG. **3**B. Still holding catheter **10** through sheath **40**, the nurse may align tip **14** with the patient's urethra. The nurse may then begin advancing catheter tip **14** into the patient's urethra. As the catheter tip **14** is advanced by the nurse, a portion of sheath **40** may become gathered toward second sheath terminus **42**. At some point, preferably when insertable portion **20** is ⅓ to ½ the way inserted into the patient, the nurse may again pull pull tab **49** to further tear sheath **40** along tear line **48** as best illustrated in FIG. **2**C. By appropriately repositioning the nurse's grasp on catheter **10** through sheath **40**, and continuing to gently urge the insertable-portion **20** of catheter **10** into the patient's urethra, sheath **40** may continue to be gathered toward collar **46**. Periodically, the nurse may further tear sheath **40** along tear line **48** by pulling pull tab **49**. When the catheter tip enters the patient's bladder a sufficient distance to commence optimal draining of accumulated urine (e.g., about 1 cm), further insertion of insertable portion **20** ceases. The nurse may then inflate expander **15** by injecting a fluid (e.g., sterile water, saline solution) into port bore **19** provided in takeoff port **17**. If sheath **40** has not been completely removed by this point, the remainder of sheath **40** may be completely torn and removed from catheter **10**. Further, once tip **14** is properly positioned within the patient's bladder and sheath **40** is completely removed from catheter **10**, distal end **12** may be secured to the patient's inner thigh.

Thus, sheath **40** is intended to prevent contamination of insertable portion **20** of indwelling catheter **10** prior to and

during use. For example, before use, sheath **40** completely encloses insertable portion **20** of catheter **10**. In addition, during use, sheath **40** is partially removed and pulled back by the nurse as insertable portion **20** is advanced into the patient, without the need for the nurse to directly contact insertable portion **20**. By deterring contamination, sheath **40** may reduce the occurrences of urinary tract infections in patients. Further, by using sheath **40** to maintain a sterile catheter, the need for separate antiseptic solutions, cotton balls, forceps and other items conventionally used to sterilize an indwelling catheter may be eliminated. By eliminating these additional items required to maintain sterility of an indwelling catheter, embodiments of the sheathed indwelling catheter assembly described herein are intended to reduce the cost for indwelling catheter kits, reduce the time required to perform an indwelling catheterization, and reduce urinary tract infections.

If pressure build-up within lumen **41** is a concern, vents in fluid communication with lumen **41** and the environment outside sheath **40** may be provided.

Referring now to FIGS. **4**A-G, partial views of alternative embodiments of a sheathed indwelling catheter assembly are shown. In general, the sheathed indwelling catheter assembly (e.g., assembly **100***d*, **100***e*, **100***f*, **100***g*, **100***h*, **100***i*, **100***j*) comprises a flexible indwelling catheter **10** and a protective sheath **40**. Further, indwelling catheter **10** includes a takeoff port **17**, a distal end **12**, an insertable portion **20**, and a non-insertable portion **30**. In some embodiments, takeoff port **17** is positioned adjacent distal end **32**. Further, takeoff port **17** includes a port bore **19** that provides fluid communication to an expander (not shown in FIGS. **4**A-G) at the proximal end of catheter **10**.

Sheath **40** comprises a first sheath terminus (not shown in FIGS. **4**A-G) and a second sheath terminus **42** that is coupled to catheter **10** at attachment point **43**. Sheath **40** encloses all, or at least part of, the insertable portion **20** within a lumen **41**. Sheath **40** may comprise any suitable material including without limitation flexible plastic or the like.

As discussed above, the length of insertable portion **20** may vary depending on a variety of factors including without limitation, the application of catheter **10** (e.g., child, adult), any space required to accommodate an introducer, if provided, that is slid toward second sheath terminus **42**, any space required to accommodate sheath **40** if sheath **40** is gathered to continue advancing catheter **10**, or combinations thereof.

Referring to FIG. **4**A, second sheath terminus **42** is coupled to catheter **10** at attachment point **43**. In this embodiment, second sheath terminus **42** slidingly engages catheter **10** about attachment point **43**. In different embodiments, second sheath terminus **42** may be fixed to catheter **10** at attachment point **43** such that second sheath terminus **42** does not move rotationally or translationally relative to catheter **10**. In addition, in the embodiment illustrated in FIG. **4**A, attachment point **43** and second sheath terminus **42**, are proximal takeoff port **17** (e.g., second sheath terminus **42** is between the proximal end of catheter **10** and takeoff port **17**). In different embodiments, second sheath terminus **42**, and attachment point **43**, may be coupled to catheter **10** at other locations.

Referring to FIG. **4**B, sheath **40** comprises second sheath terminus **42** and a sheath port terminus **47**. Second sheath terminus **42** is coupled to catheter **10** at attachment point **43**, and sheath port terminus **47** is coupled to takeoff port **17**. In this embodiment, second sheath terminus **42** slidingly engages catheter **10** about attachment point **43**, and sheath port terminus **47** slidingly engages takeoff port **17**. In different embodiments (e.g., FIG. **4**D), second sheath terminus **42** may be fixed to catheter **10** at attachment point **43**, while sheath port terminus **47** may slidingly engage takeoff port **17**. Further, in other embodiments (e.g., FIG. **4**F), second sheath terminus **42** may be fixed to catheter **10** at attachment point **43** and sheath port terminus **47** may be fixed to takeoff port **17**. Still further, in select embodiments, second sheath terminus **42** may slidingly engage catheter **10** at attachment point **43** while sheath port terminus **47** may be fixed to takeoff port **17**.

Still referring to FIG. **4**B, attachment point **43**, and second sheath terminus **42**, are distal to takeoff port **17** (e.g., second sheath terminus **42** is between takeoff port **17** and distal end **12**). In this configuration, even though second sheath terminus **42** and port sheath terminus **47** slidingly engage catheter **10**, by coupling both takeoff port **17** and catheter **10** at attachment point **43**, sheath **40** may not be easily slid off and removed from catheter **10** without tearing sheath **40**.

Referring to FIG. **4**C, second sheath terminus **42** is coupled to catheter **10** at attachment point **43**. In this embodiment, second sheath terminus **42** is fixed to catheter **10** about attachment point **43** by a second collar **46** such that second sheath terminus **42** and second collar **46** do not move rotationally or translationally relative to catheter **10**. In addition, attachment point **43**, second sheath terminus **42**, and second collar **46** are proximal takeoff port **17** of catheter **10** (e.g., second sheath terminus **42** is between the proximal end of catheter **10** and takeoff port **17**). In different embodiments (e.g., FIGS. **4**D and **4**F), second sheath terminus **42**, attachment point **43**, and collar **46** may be coupled to catheter **10** at other locations (e.g., distal takeoff port **17**).

In addition, second collar **46** illustrated in FIG. **4**C includes at least one vent **51** that is in fluid communication with lumen **41** and the environment outside lumen **41**. The at least one vent **51** is, in this embodiment, a passageway or duct extending through collar **46** so as to provide relief for potential pressure build-ups within lumen **41**.

Referring to FIG. **4**D, second sheath terminus **42** is coupled to catheter **10** at attachment point **43** and sheath port terminus **47** is coupled to takeoff port **17**. In this embodiment, second sheath terminus **42** is fixed to catheter **10** at attachment point **43** by second collar **46**. However, sheath port terminus **47** slidingly engages takeoff port **17**. In different embodiments (e.g., FIG. **4**B), second sheath terminus **42** may slidingly engage catheter **10** at attachment point **43**. Further, in other embodiments (e.g., FIG. **4**F), sheath port terminus **47** may be fixed to takeoff port **17**.

Still referring to FIG. **4**D, second collar **46**, attachment point **43**, and second sheath terminus **42** are distal takeoff port **17** (e.g., second sheath terminus **42** is between takeoff port **17** and distal end **12**). By coupling to both takeoff port **17** and catheter **10** at attachment point **43**, sheath **40** may not be easily removed from catheter **10** without tearing sheath **40**.

Referring to FIG. **4**E, second sheath terminus **42** is coupled to catheter **10** at attachment point **43**. In this embodiment, second sheath terminus **42** is fixed to catheter **10** about attachment point **43** by heat pressing second sheath terminus **42** to catheter **10**. In addition, attachment point **43** and second sheath terminus **42** are proximal takeoff port **17** of catheter **10** (e.g., second sheath terminus **42** is between the proximal end of catheter **10** and takeoff port **17**). In different embodiments, second sheath terminus **42** may be heat pressed to catheter **10** at other locations (e.g., distal takeoff port **17**).

Referring to FIG. **4**F, second sheath terminus **42** is coupled to catheter **10** at attachment point **43** and sheath port terminus **47** is coupled to takeoff port **17**. In this embodiment, second sheath terminus **42** is fixed to catheter **10** at attachment point **43** by second collar **46**. Further, sheath port terminus **47** is fixed to takeoff port **17** by port collar **48**. By coupling to both

takeoff port **17** and catheter **10** at attachment point **43**, sheath **40** may not be easily removed from catheter **10** without tearing sheath **40**.

Referring to FIG. **4**G, second sheath terminus **42** is coupled to catheter **10** at attachment point **43**. In this embodiment, second sheath terminus **42** is fixed to catheter **10** about attachment point **43** by a second collar **46**. In addition, second collar **46** straddles takeoff port **17**, such that second sheath terminus **42** is not free to move relative to catheter **10**. By straddling takeoff port **17**, sheath **40** may not be easily removed from catheter **10** without tearing sheath **40**.

In each embodiment disclosed herein, a sheath **40** is provided to partially or completely enclose and protect insertable portion **20** of catheter **10**. In particular, sheath **40** is provided to deter contamination of insertable portion **20** by preventing non-sterile surfaces from coming into contact with insertable portion **20**.

In some embodiments (not illustrated), the sheathed indwelling catheter assembly (e.g., assembly **100***a-j*), may further comprise a urine collection bag or receptacle. The urine collection receptacle may be removably attached, permanently attached (non-removable), or integral with the sheathed indwelling catheter assembly. Such a collection receptacle may be constructed of any suitable material. Collection receptacle is preferably made of a flexible, waterproof material (e.g., plastic) and is sized to hold a sufficient volume of urine between periodic emptying of the receptacle. For example, the urine collection receptacle may have a volume in the range of 700-2000 mL.

As previously discussed, in certain embodiments, the sheathed indwelling catheter assembly (e.g., assembly **100***a-j*) may include a lubricant to lubricate tip **14** and insertable portion **20** prior to entry into the patient's urethra. Such lubricant may be provided within the sheath lumen **41**, in an introducer (if provided), in a tip cover, or may be manually applied. Further in some embodiments, the indwelling catheter may be a hydrophilic indwelling catheter that is lubricated by a wetting agent. Such a wetting agent may be provided in the sheath lumen, in an introducer (if provided), in a tip cover, or manually applied. Preferably, at least tip **14** and a proximal $\frac{1}{3}^{rd}$ portion of insertable portion **20** are lubricated prior to advancement into the patient's urethra. In some embodiments, catheter **10** may be pre-lubricated by a sterile gel. House I and House II disclose some embodiments of sheathed catheter assemblies including lubricants and/or wetting agents. In addition to a lubricating agent, in some embodiments, the indwelling catheter used in the sheathed indwelling catheter assembly may be coated with an bacteriostatic and/or bactericidal agent. Without being limited by theory, by providing a bacteriostatic or bactericidal agent on the indwelling catheter, urinary tract infections may be reduced.

In the embodiment illustrated in FIGS. **1**A-**1**C, a plurality of vents **50** are provided in sheath **40** to aid in relieving a possible pressure build-up within lumen **41**. As previously discussed, in some indwelling catheter assemblies, the process of gathering sheath **40** to advance insertable portion **20** may result in an increase in pressure (e.g., a pressure build-up) in sheath lumen **41**. This may particularly be a problem with indwelling catheter assemblies in which there is limited or no means to relieve pressure build-up within lumen **41** (e.g., no fluid communication between lumen **41** and the environment outside sheath **40**). Thus, by including one or more vents (e.g., vents **50** in FIGS. **1**A-**1**C, vent **51** in FIG. **4**C) in fluid communication with lumen **41** of sheath **40** and an environment outside sheath **40**, some pressure build-up within lumen **41** may be relieved. In certain embodiments, the vents may place lumen **41** of sheath **40** in fluid communication with the lumen of a urine collection receptacle.

Vents **50** illustrated in FIGS. **1**A-**1**C are slits in sheath **40** located adjacent second sheath terminus **42**. The at least one vent **51** illustrated in FIG. **4**C is a passageway provided through and across second collar **46**. However, in general, one or more vents to relieve pressure within lumen **41** may be of any suitable geometry including without limitation, slits, holes, perforations, or combinations thereof. Further, vents to relieve pressure within lumen **41** may be located in any suitable location including without limitation, along the entire sheath **40**, at the distal end of sheath **40**, at the proximal end of sheath **40**, in second collar **46**, in an introducer (e.g., introducer **75***a* in FIGS. **1**A-**1**C), or combinations thereof. To minimize potential contamination of insertable portion **20**, any vents are preferably located adjacent second sheath terminus **42** in the region of non-insertable portion **30**. Still further, the vents may be of any suitable size that allows adequate pressure relief to lumen **41**. However, preferably the vents are small enough to minimize the possibility of insertable portion **20** from contacting a non-sterile surface. U.S. Provisional Application EV 303424660 US (House IV) discloses some embodiments of a vented sheath that may be modified and adapted for use on indwelling catheter **10** of the present disclosure.

FIGS. **1**A-**1**C show the urethra-contacting end of indwelling catheter assembly **100***a* (proximal end of assembly **100***a*) as including an introducer **75***a*. In particular, introducer **75***a* illustrated in FIGS. **1**A-**1**C is an introducer similar to that disclosed in House II. Further, FIGS. **2**A-**2**C show the urethra-contacting end of indwelling catheter assembly **100***b* (proximal end of assembly **100***b*) as including an introducer **75***b*. In particular, introducer **75***b* is an O'Neil® type introducer with a "cross-cut" proximal end. However, in general, the proximal end of the sheathed indwelling catheter assembly (e.g., assemblies **100***a-j*) may comprise any suitable configuration. For example, in some embodiments, the introducer (e.g., **75***a* in FIG. **1**A, **75***b* in FIG. **2**A) may be replaced with another type of protective tip cover adapted keep at least tip **14** the catheter sterile prior to and during use. The introducer or tip cover may be similar to those that are known in the art. Additional suitable configurations for the proximal end of catheter **10** are disclosed in House I, House II, and House III.

Further, in some embodiments (e.g., FIGS. **3**A-**3**C), no introducer or tip cover is provided. In such embodiments, sheath **40** may completely or partially enclose tip **14** and insertable portion **20** of catheter **10** to deter contamination of insertable portion **20**.

Still further, in some embodiments, the introducer (e.g., introducer **75***a* in FIG. **1**A, introducer **75***b* in FIG. **2**A) or other tip cover may be completely removable from catheter **10**. For example, in some embodiments, the introducer or tip cover may be designed to be broken away from catheter **10** by a user.

In the embodiments of the sheathed indwelling catheter assembly illustrated in FIGS. **1**A-**1**C, **2**A-**2**C, and **3**A-**3**C (assemblies **100***a*, **100***b*, and **100***c*, respectively), a fixation tab **60** is provided. Generally, fixation tab **60** may be used to couple catheter **10** to the patient (e.g., to patient's inner thigh, to patient's lower abdomen, to patient's outer thigh, etc.) once tip **14** of catheter **10** is properly positioned in the patient's urinary bladder. Fixation tab **60** may be coupled to the patient by any suitable means including without limitation, adhesive pad, hook and loop material, an elastic band around the patient's leg that holds the catheter down, or combinations thereof. For example, in some embodiments, fixation tab **60** may include a male or female connector that removably

attaches with a mating female or male connector provided on the adhesive pad that is adhered to the patient.

In addition, in other embodiments, catheter **10** may be coupled to the patient via an adhesive pad similar to a Statlock® type pad that includes a removable, releasable, and replaceable clamping mechanism to clamp around a portion of catheter **10**.

In embodiments in which an adhesive pad is used (e.g., Statlock® type device) to couple catheter **10** to the patient, preferably catheter **10** is removably coupled to the patient such that the adhesive pad may be changed if it becomes wet or soiled.

In FIGS. **1**A-**1**C, fixation tab **60** is positioned on introducer **75***a*; in FIGS. **2**A-**2**C, fixation tab **60** is provided on introducer **75***b*; in FIGS. **3**A-**3**C, fixation tab **60** is provided on distal end **12**. However, in general, fixation tab **60** may be provided at any suitable location on the sheathed indwelling catheter assembly (e.g., assembly **100***a*), such that the indwelling catheter (e.g., indwelling catheter **10**) may be coupled to the patient during extended catheterizations. For instance, fixation tab **60** may be provided on distal end **32**, on catheter **10** distal to takeoff port **17**, on catheter **10** proximal to takeoff port **17**, on takeoff port **17**, on an introducer (e.g., introducer **75***a* or **75***b*), on a collar coupling sheath **40** to the indwelling catheter, or combinations thereof. Further, in some embodiments, no fixation tab **60** is provided. Still further, in other embodiments (e.g., FIG. **2**A), more than one fixation tab **60** may be provided.

During extended use of the indwelling catheter **10**, both expander **15** and fixation tab **60** may cooperate to deter withdraw of indwelling catheter **10** from the patient and to prevent excessive movement of indwelling catheter **10** relative to the patient.

In general, distal end **12** of indwelling catheter **10** may comprise any suitable geometry. Examples of suitable geometries include without limitation, flared or increased diameter distal end **12** (e.g., FIGS. **1**A-**1**C, **4**A-**4**G), uniform diameter distal end **12** (e.g., FIGS. **2**A-**2**C, **3**A-**3**C), decreasing diameter distal end **12**, etc.

Further, in each of the Figures disclosed herein, distal end **12** of catheter **10** extends outside sheath **40**. However, in other embodiments, part or all of non-insertable portion **30**, including distal end **12**, may be enclosed by sheath **40**, similar to those shown in House III, which discloses catheter assemblies in which non-insertable portion **30** is partially and completely enclosed by sheath **40**.

Embodiments of the sheathed indwelling catheter assembly disclosed in FIGS. **2**A-**2**C and **3**A-**3**C (assemblies **100***b* and **100***c*, respectively), include a removable sheath **40**. Sheath **40** includes a pre-weakened tear line **48** coupled to a pull tab **49** such that sheath **40** is designed to tear along tear line **48** when pull tab **49** is pulled. Other embodiments of the sheathed indwelling catheter assembly (e.g., **100***a*, and *d-j*) may include a removable sheath **40** similar to that shown in FIGS. **1**A-**1**C and **3**A-**3**C. Such a removable sheath may be configured to be completely removed once tip **14** of indwelling catheter **10** is properly positioned in the patient urinary bladder or removed as tip **14** is advanced into the patient's urethra. Preferably, any removable sheath is removed in a manner to minimize opportunities for insertable portion **20** to contact a non-sterile surface.

Catheterization Kit

Referring to FIG. **5**, a representative catheterization kit ("cath kit") **70** that is particularly useful for long-term patient catheterizations includes a sheathed indwelling catheter assembly **72**, representative of those shown and described above as sheathed catheter assemblies **100***a-j*. For example, sheathed catheter assembly **72** may include an introducer **75**, catheter **10**, and a sheath **40**. Sheath **40** may be coupled to introducer **75**, if present, and coupled to catheter **10** near the distal end **12** of catheter **10**. Further, assembly **72** may include one or more vents (not shown in FIG. **5**) in any suitable location including without limitation, in sheath **40**, in introducer **75**, in a collar (e.g., collar **43**) coupling sheath **40** to catheter **10**, or combinations thereof.

In addition to the sheathed catheter assembly, the kit preferably also contain one or more packaged antiseptic swabs **79** (e.g., swabs saturated with Betadine, Povidone-Iodine or other suitable antiseptic), disposable gloves **80**, an adhesive pad **81** (e.g., Statlock® type adhesive pad) small urine specimen bottle (with cap) **78**, and a tray **71** that holds these supplies and also serves as a urine collection container and has a capacity in the range of 700-2000 mL, preferably about 1000 mL. Preferably a fenestrated drape is also included in the kit. A gauze pad may also be included in the kit as a convenient wipe at the end of the procedure. The kit components are protected by a sanitary wrapper or cover **82**. All kit components are preferably disposable.

Absent from the present kit, however, are the customary liquid antiseptic packet, cotton balls, tray for cotton balls, forceps, and packet containing lubricating jelly. In some embodiments, the fenestrated drape is also omitted from the kit without compromising sterile technique. The conventional waterproof absorbent pad is also unnecessary, as it was often included in the past primarily to provide a sterile field for placement of the sterile jelly. Preferably, the lubricant is provided within the indwelling catheter assembly. For example, a lubricating amount of sterile lubricant may be present inside the sheath lumen, or inside introducer **75**. Further, in some embodiments, indwelling catheter **10** may be a lubricated hydrophilic type as is known in the art, in which case the lumen and/or the introducer **75** (e.g., an introducer) a wetting agent (e.g., water). A drawback of conventional apparatus and methods is that contact between the indwelling catheter and any non-sterile surface (e.g., nurses hands, patient's leg, etc.), as when lubricating jelly is applied, for instance, increases the risk of contamination of the indwelling catheter, which may result in a urinary tract infection. In contrast, with the present kit, if sheathed indwelling catheter assembly **72** touches anything outside the sterile field, the insertable portion of the catheter remains sterile. Another potential problem associated with conventional catheterization kits and procedures is that, if a glove touches anything outside the sterile field and then touches the catheter, the catheter may become contaminated. If a sheathed indwelling catheter assembly is employed instead, and if a glove becomes contaminated, the indwelling catheter nevertheless remains sterile inside the protective sheath. Thus, the risk of infection and patient morbidity is reduced or eliminated with use of the new catheterization kit and catheterization procedure.

Liquid antiseptic packet, cotton balls, tray for cotton balls, forceps, and packet containing lubricating jelly are not needed for carrying out a streamlined catheterization procedure with the above-described sheathed catheter assembly **72** and maintaining sterile technique.

Catheterization Procedure

Embodiments of the sheathed indwelling catheter assembly of the present disclosure (e.g., assemblies **100***a-j*) may be used alone or as part of catheterization kit **70**. In general, the sheathed indwelling catheter assembly is employed as described above in reference to FIGS. **1**A-**1**C, **2**A-**2**C, and **3**A-**3**C.

When the sheathed indwelling catheter assembly (e.g., assembly **100***a-j*) is included as part of the catheterization kit **70**, catheterization kit **70** is preferably employed as follows: After opening the sanitary wrapper **82**, the nurse dons the gloves **80** and places the fenestrated drape, if provided, around the patient's genitalia. The packet **79** containing the antiseptic swabs is opened and the urethral area around the urethral opening is cleansed using the antiseptic swabs. Then an embodiment of the sheathed indwelling catheter assembly of the present invention (e.g., **100***a*, **100***b*, **100***c*) may be inserted into the patient's urethra and advanced to the patient's urinary bladder in the manner previously described in reference to FIGS. **1**A-**1**C, **2**A-**2**C, or **3**A-**3**C.

When the catheter tip enters the patient's bladder a sufficient distance to commence optimal draining of accumulated urine (e.g., 1 cm), further insertion ceases. At about the same time, the nurse may inject fluid through port bore **19** of takeoff port **17** to inflate expander **15**, thereby maintaining indwelling catheter **10** in the appropriate position for extended catheterization. Further, catheter **10** may be coupled to the patient by applying adhesive pad **81** to the patient and coupling catheter **10** to the adhesive pad. For example, if adhesive pad **81** is similar to a Statlock® type adhesive pad, the adhesive pad **81** may be adhered to the patient and catheter **10** may be coupled to adhesive pad **81** by a removable, releasable, and replaceable locking device provided in the pad.

Prior to commencement of urine drainage, the distal end **12** is coupled to tray **71** so that urine can drain into tray **71** while preventing catheter **10** from contacting the collected urine. Alternatively, any other suitable urine receptacle may be used instead of the disposable tray **71** provided as part of the kit. In some embodiments, a urine receptacle or bag may already be integral with or otherwise attached to distal end **12**.

After commencement of urine flow, outlet **18** of catheter **10** may be directed briefly into the specimen container **78**, to collect a sterile specimen, if needed. Upon completion of urine evacuation, catheter **10** may be maintained in proper position within the patient for long-term catheterization. In particular, indwelling catheter assembly **72** may be maintained in proper position within the patient for an extended period of time by expander **15** and fixation tab **60**. The entire catheterization process can usually be accomplished by a nurse in a relatively short period of time, maintaining sterile technique throughout the procedure. Once the catheterization is no longer necessary, expander **15** may be deflated and catheter **10** may be simply withdrawn from the urethra and disposed. If desired, the catheter may be retracted into the sheath prior to disposal

The disclosed catheterization kit **70** and simplified procedure offers a way to simplify and streamline long-term or extended catheterization procedures without compromising sterile technique. Every item that the new kit **70** eliminates from the customary indwelling catheterization setup will decrease the number of procedural steps, and also reduces the amount of nursing time needed. Fewer steps also reduces the patient's risk for urinary tract infection, and decreases inconvenience for the patient. Kit **70** is intended to substantially reduce nursing time required to carry out an indwelling catheterization procedure.

The embodiments described herein are intended to offer the potential to improve the convenience and sterility desirable for catheterization procedures. Some embodiments are designed to deter contamination of an indwelling catheter, while streamlining the procedures required to employ the indwelling catheter. By deterring contamination of the indwelling catheter, embodiments of the present invention reduce the potential for urinary tract infections. Further, by streamlining the indwelling catheterization procedure, the embodiments disclosed herein are intended to reduce the time required to employ an indwelling catheter while maintaining a sterile environment.

The disclosures of all patents, patent applications, and publications cited herein are hereby incorporated herein by reference in their entirety, to the extent that they provide exemplary, procedural, or other details supplementary to those set forth herein. Further, the discussion of a reference in this disclosure is not an admission that it is prior art to the present invention, especially any reference that may have a publication date after the priority date of this application.

The foregoing disclosure of the exemplary embodiments of the present invention has been presented for purposes of illustration and description. It is not intended to be exhaustive or to limit the invention to the precise forms disclosed. Many variations and modifications of the embodiments described herein will be apparent to one of ordinary skill in the art in light of the above disclosure. The scope of the invention is to be defined only by the claims appended hereto, and by their equivalents.

Further, in describing representative embodiments of the present invention, the specification may have presented the method and/or process of the present invention as a particular sequence of steps. However, to the extent that the method or process does not rely on the particular order of steps set forth herein, the method or process should not be limited to the particular sequence of steps described. As one of ordinary skill in the art would appreciate, other sequences of steps may be possible. Therefore, the particular order of the steps set forth in the specification should not be construed as limitations on the claims. In addition, the claims directed to the method and/or process of the present invention should not be limited to the performance of their steps in the order written, and one skilled in the art can readily appreciate that the sequences may be varied and still remain within the spirit and scope of the present invention.

What is claimed is:

1. An indwelling urinary catheter assembly comprising:

an indwelling catheter comprising a first end having a urine inlet, a second end having a urine outlet, a takeoff port having a port bore, an expander, and a urethra insertable portion;

wherein the urine inlet and urine outlet are in fluid communication with one another and wherein the port bore and the expander are in fluid communication with one another;

a pliable sheath comprising a lumen, wherein the sheath encloses at least a portion of the insertable portion; and

an introducer attached to the sheath, wherein the introducer is dimensioned and configured to enclose and support the first end when in an initial position, the introducer slidingly receives the insertable portion during insertion of the insertable portion into the urethra of a patient, wherein the introducer is dimensioned and configured to be partially inserted into the urethra of a patient, and the introducer together with the sheath encloses all of the urethra-insertable portion when in the initial position;

wherein the sheath further comprises a terminus directly coupled to an area of the catheter that includes a portion of the takeoff port; and

wherein the terminus comprises a collar having at least one vent in fluid communication with the lumen and an environment outside the sheath, the vent being dimensioned and configured to relieve a pressure build-up within the sheath.

2. The indwelling catheter assembly of claim 1, wherein the terminus sealingly engages the catheter at an attachment point at the area including the portion of the takeoff port.

3. The catheter assembly of claim 1, further comprising a non-insertable portion, wherein at least part of the non-insertable portion comprises an uncovered region of the indwelling catheter outside the sheath.

4. The catheter assembly of claim 3 further comprising a urine receptacle coupled to the non-insertable portion of the catheter.

5. The indwelling catheter assembly of claim 1, wherein the sheath is removably attached to the indwelling catheter.

6. An catheterization kit comprising:

the indwelling urinary catheter assembly of claim 1; and

a sanitary wrapper enclosing the assembly.

7. The kit of claim 6 consisting essentially of the following items:

the indwelling urinary catheter assembly;

at least one antiseptic swab;

disposable gloves;

a urine specimen container; and

a tray capable of holding the catheter assembly, swab(s), gloves, and specimen container,

wherein the tray is also capable of serving as a urine receptacle; and a

sanitary wrapper enclosing the items.

8. The kit of claim 7 excluding one or more drapes.

9. The kit of claim 8 excluding forceps.

10. The kit of claim 9 excluding antiseptic liquid.

11. The indwelling catheter assembly of claim 1, wherein the indwelling catheter has a total length from the first end to the second end, wherein the indwelling catheter is prelubricated from the first end to a point located at $1/3^{rd}$ the length from the first end.

12. The indwelling catheter assembly of claim 1, wherein the introducer comprises a lubricant reservoir operable to lubricate the insertable portion.

13. The indwelling catheter assembly of claim 1, further comprising a fixation tab coupled to the collar.

14. An indwelling urinary catheter assembly comprising:

an indwelling catheter comprising a first end having a urine inlet, a second end having a urine outlet, a takeoff port between the first end and second end, an expander, and a urethra insertable portion;

wherein the takeoff port includes a port bore in fluid communication with the expander;

wherein the urine inlet and urine outlet are in fluid communication;

a pliable sheath comprising a lumen, wherein the sheath encloses at least a portion of the insertable portion; and

an introducer attached to the sheath opposite the terminus, wherein the introducer is dimensioned and configured to enclose and support the first end when in an initial position, the introducer slidingly receives the insertable portion during insertion of the insertable portion into the urethra of a patient, wherein the introducer is dimensioned and configured to be partially inserted into the urethra of a patient, and the introducer together with the sheath encloses all of the urethra-insertable portion when in the initial position;

wherein the sheath further comprises a terminus directly coupled to an area of the catheter that includes a portion of the takeoff port; and

wherein the terminus comprises a collar having at least one vent in fluid communication with the lumen and an environment outside the sheath, the vent being dimensioned and configured to relieve a pressure build-up within the sheath.

15. The indwelling catheter assembly of claim 14, wherein the sheath is removably attached to the indwelling catheter.

16. The indwelling catheter assembly of claim 15, wherein the collar is dimensioned and configured to removably attach to the introducer.

17. The indwelling catheter assembly of claim 14, wherein the introducer further comprises a fixation tab adapted to couple the catheter to a patient.

18. A catheterization kit comprising:

the indwelling urinary catheter assembly of claim 14; and

a sanitary wrapper enclosing the assembly.

19. An indwelling urinary catheter assembly comprising:

an indwelling catheter comprising a first end having a urine inlet, a second end having a urine outlet, a takeoff port between the first end and second end, an expander, and a urethra insertable portion;

wherein the takeoff port includes a port bore in fluid communication with the expander;

wherein the urine inlet and urine outlet are in fluid communication;

a pliable sheath comprising a lumen and a terminus, wherein the sheath encloses part of the insertable portion, and wherein the terminus is directly coupled to each of an area of the catheter that includes a portion of the takeoff port, the indwelling catheter between the takeoff port and first end, and the indwelling catheter between the takeoff port and the second end, wherein the terminus further comprises a collar having at least one vent in fluid communication with the lumen and an environment outside the sheath, the vent being dimensioned and configured to relieve a pressure build-up within the sheath; and

an introducer attached to the sheath opposite the terminus, wherein the introducer is dimensioned and configured to enclose and support the first end when in an initial position, the introducer slidingly receives the insertable portion during insertion of the insertable portion into the urethra of a patient, wherein the introducer is dimensioned and configured to be partially inserted into the urethra of a patient, and the introducer together with the sheath encloses all of the urethra-insertable portion when in the initial position.

20. The indwelling catheter assembly of claim 19, wherein the sheath is removably attached to the indwelling catheter.

21. The indwelling catheter assembly of claim 19, wherein the collar is dimensioned and configured to attach to the introducer.

22. The indwelling catheter assembly of claim 19, wherein the indwelling catheter is coated with a bacteriostatic or bactericidal agent.

23. A catheterization kit comprising:

the indwelling urinary catheter assembly of claim 19; and

a sanitary wrapper enclosing the assembly.

* * * * *

EXHIBIT 11

US009808400B2

(12) **United States Patent**
Tomes et al.

(10) **Patent No.: US 9,808,400 B2**
(45) **Date of Patent: *Nov. 7, 2017**

(54) **CATHETER TRAY, PACKAGING SYSTEM, AND ASSOCIATED METHODS**

(71) Applicant: **Medline Industries, Inc.**, Mundelein, IL (US)

(72) Inventors: **Jennifer E. Tomes**, Mundelein, IL (US); **Deborah B. Adler**, New York, NY (US); **Jack E. Maze**, Long Grove, IL (US); **Alberto C. Savage**, Buffalo Grove, IL (US); **Kenneth S. Chua**, Glenview, IL (US); **Earl D. Wilson**, Ingleside, IL (US); **John Henry Kutsch**, Harvard, IL (US)

(73) Assignee: **Medline Industries, Inc.**, Mundelein, IL (US)

(*) Notice: Subject to any disclaimer, the term of this patent is extended or adjusted under 35 U.S.C. 154(b) by 0 days.

This patent is subject to a terminal disclaimer.

(21) Appl. No.: **14/265,909**

(22) Filed: **Apr. 30, 2014**

(65) **Prior Publication Data**

US 2014/0231287 A1 Aug. 21, 2014

Related U.S. Application Data

(60) Continuation of application No. 12/846,675, filed on Jul. 29, 2010, now Pat. No. 8,746,452, which is a

(Continued)

(51) **Int. Cl.**
A61J 1/00 (2006.01)
A61M 25/00 (2006.01)

(Continued)

(52) **U.S. Cl.**
CPC ***A61J 1/00*** (2013.01); ***A61B 50/30*** (2016.02); ***A61B 50/33*** (2016.02); ***A61M 25/00*** (2013.01);

(Continued)

(58) **Field of Classification Search**
USPC 206/570–572, 363–366, 370, 561, 563, 206/557; 220/505, 555
See application file for complete search history.

(56) **References Cited**

U.S. PATENT DOCUMENTS

2,659,485 A 11/1953 Duley et al.
2,715,296 A 8/1955 Petit

(Continued)

FOREIGN PATENT DOCUMENTS

CN 201823147 5/2011
JP 2007-229520 9/2007

(Continued)

OTHER PUBLICATIONS

"IPR 2015-00514—Request for Rehearing Denied", IPR2015-00514; U.S. Pat. No. 8,678,190; Decision on Request for Rehearing—Denied; Mailed Jul. 16, 2015.

(Continued)

Primary Examiner — Robert Poon

(57) **ABSTRACT**

A tray (**100**) for accommodating a coiled medical device, such as a catheter assembly (**700**), includes a first compartment (**101**), a second compartment (**102**), and a third compartment (**103**). The catheter assembly (**700**) and devices associated with a catheterization procedure, such as syringes (**701**,**702**) containing sterile water and lubricating jelly and a specimen container (**703**) can be disposed within the tray. A first barrier (**105**) and second barrier (**106**) separate the compartments. The barriers can have openings (**121**,**122**) therein to accommodate large syringes or to enable the first compartment (**101**) to be used as a lubricant applicator for the catheter. The first compartment (**101**) can include a stair-stepped contour (**115**) such that the syringes are held at different depths to facilitate ease of use. The various devices

(Continued)

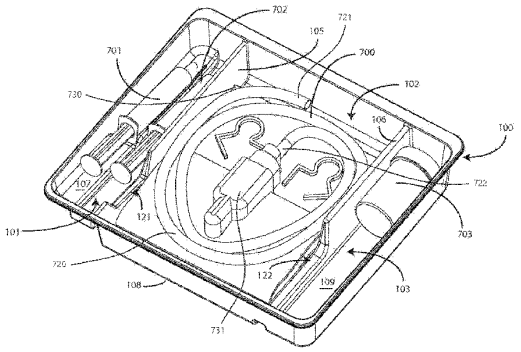

can be disposed within the tray (**100**) in accordance with their order of use in the catheterization procedure.

22 Claims, 9 Drawing Sheets

Related U.S. Application Data

division of application No. 12/495,148, filed on Jun. 30, 2009, now Pat. No. 8,631,935.

(60) Provisional application No. 61/183,629, filed on Jun. 3, 2009.

(51) **Int. Cl.**

A61B 50/33	(2016.01)
A61B 50/30	(2016.01)
A61B 42/00	(2016.01)
A61B 46/00	(2016.01)

(52) **U.S. Cl.**

CPC ***A61M 25/002*** (2013.01); *A61B 42/00* (2016.02); *A61B 46/00* (2016.02); *A61B 2050/3008* (2016.02); *A61B 2050/3015* (2016.02)

(56) **References Cited**

U.S. PATENT DOCUMENTS

2,781,611 A 2/1957 West
2,886,316 A 5/1959 Ayala
2,947,415 A 8/1960 Garth
2,954,642 A 10/1960 Roderick
2,959,891 A 11/1960 Barnett et al.
3,107,786 A 10/1963 Adelman
3,166,189 A 1/1965 Disston
3,315,802 A 4/1967 Maro
3,329,261 A 7/1967 Serany, Jr. et al.
3,379,339 A 4/1968 Asenbauer
3,485,352 A 12/1969 Pilger
D218,077 S 7/1970 Gabriel
3,542,019 A 12/1970 Gittins
3,726,281 A 4/1973 Norton
3,851,649 A 12/1974 Villari
D234,404 S 2/1975 Merril
D237,315 S 10/1975 Nowkowski
D237,317 S 10/1975 Norkowski
3,967,728 A 7/1976 Gordon et al.
3,976,195 A 8/1976 Cohen
3,978,983 A 9/1976 Brezetta
D242,654 S 12/1976 Rawls
3,998,221 A 12/1976 Collins
D243,798 S 3/1977 Swartz
4,011,944 A 3/1977 Cooley
4,053,280 A 10/1977 Salisbury
4,075,782 A 2/1978 Neuschatz
D248,871 S 8/1978 Forsman et al.
D249,362 S 9/1978 Forsman et al.
4,160,505 A 7/1979 Rauschenberger
4,170,300 A 10/1979 Pick
4,226,328 A * 10/1980 Beddow A61F 17/00 206/364
4,266,669 A 5/1981 Watson
4,282,678 A 8/1981 Tsui
4,307,539 A 12/1981 Klein
D262,995 S 2/1982 Gaba et al.
D268,130 S 3/1983 Easton
4,458,705 A 7/1984 Cawood
D275,886 S 10/1984 Sheward et al.
D276,462 S 11/1984 Villarreal
D277,508 S 2/1985 Clair
4,523,679 A 6/1985 Paikoff et al.
4,530,349 A 7/1985 Metzger
D280,663 S 9/1985 Albon et al.
D280,933 S 10/1985 McLaughlin
D280,993 S 10/1985 Mariol
D283,051 S 3/1986 Fichera
D287,760 S 1/1987 Discko, Jr.
4,761,008 A 8/1988 Huggins
4,767,008 A 8/1988 Warnecke et al.
4,795,441 A * 1/1989 Bhatt A61G 7/0503 128/DIG. 26
4,828,113 A 5/1989 Friedland
4,844,259 A 7/1989 Glowczewskie, Jr. et al.
4,858,821 A * 8/1989 Bickelhaupt A61M 25/002 206/364
D310,896 S 9/1990 Winjum
4,991,877 A 2/1991 Lieberman
5,007,535 A 4/1991 Meseke et al.
5,024,326 A 6/1991 Sandel et al.
5,031,768 A * 7/1991 Fischer 206/370
5,094,621 A 3/1992 Friedel
5,163,557 A 11/1992 Sokolowski
5,170,804 A 12/1992 Glassman
5,197,885 A 3/1993 Friedel
D334,973 S 4/1993 Valentine et al.
D337,830 S 7/1993 Coyne et al.
5,232,369 A 8/1993 Mavrikis
5,244,394 A 9/1993 Serabian-Musto
D343,687 S 1/1994 Houghton et al.
5,312,287 A 5/1994 Chuang
5,314,339 A 5/1994 Aponte
5,318,543 A 6/1994 Ross et al.
5,324,201 A 6/1994 Friedel
5,339,955 A * 8/1994 Horan et al. 206/370
D351,661 S 10/1994 Fischer
5,392,918 A 2/1995 Harrison
5,411,437 A 5/1995 Weber et al.
5,487,566 A 1/1996 Hedge, Jr.
D380,272 S 6/1997 Partika et al.
5,665,945 A 9/1997 Oshima
D387,177 S 12/1997 Davis
D387,559 S 12/1997 Williamson
5,713,778 A 2/1998 Rodeosevich et al.
5,720,502 A 2/1998 Cain
5,778,574 A 7/1998 Reuben
5,779,053 A 7/1998 Partika
5,795,213 A 8/1998 Goodwin
5,820,441 A 10/1998 Pracas
5,827,262 A 10/1998 Neftel et al.
5,829,790 A 11/1998 Phillips
5,872,262 A 2/1999 Dolle, III et al.
5,941,241 A 8/1999 Weinstein et al.
5,947,284 A 9/1999 Foster
5,954,369 A 9/1999 Seabrook
5,975,295 A 11/1999 Diamond
6,004,136 A 12/1999 Ehrenpreis
6,012,586 A * 1/2000 Misra A61B 50/30 206/370
6,068,121 A 5/2000 McGlinch
6,089,943 A 7/2000 Lo
6,142,152 A 11/2000 Gawarecki
6,158,437 A 12/2000 Vagley
6,159,017 A 12/2000 Coomansingh
D442,697 S 5/2001 Hajianpour
D450,130 S 11/2001 Goldstein
D450,391 S 11/2001 Hunt et al.
6,330,427 B1 12/2001 Tabachnik
6,361,396 B1 3/2002 Snyder et al.
6,382,212 B1 5/2002 Borchard
6,405,863 B1 6/2002 Dhindsa
6,454,097 B1 9/2002 Blanco
6,579,271 B1 6/2003 Aruffo et al.
6,659,506 B1 12/2003 Erisalu
6,681,933 B1 1/2004 Demsien et al.
6,769,546 B2 8/2004 Busch
D495,491 S 9/2004 Ramirez
6,793,078 B2 9/2004 Roshdy
6,840,379 B2 1/2005 Franks-Farah et al.
6,896,141 B2 5/2005 McMichael et al.
6,915,901 B2 7/2005 Feinberg
6,926,708 B1 8/2005 Franks-Farah et al.
6,948,742 B2 9/2005 Buck

(56) **References Cited**

U.S. PATENT DOCUMENTS

7,048,120	B2	5/2006	Pond	
7,066,328	B2	6/2006	Pulsifer	
D530,920	S	10/2006	Snell	
D547,064	S	7/2007	Snell	
D549,454	S	8/2007	Ahman	
7,264,869	B2	9/2007	Tobita	
7,278,987	B2	10/2007	Solazzo	
D557,047	S	12/2007	Dretzka	
D561,473	S	2/2008	Phillips et al.	
D563,673	S	3/2008	Dretzka	
7,401,703	B2	7/2008	McMichael	
7,434,687	B2	10/2008	Itou et al.	
D579,662	S	11/2008	Dretzka	
D590,596	S	4/2009	Dretzka	
D596,311	S	7/2009	Antons	
7,624,869	B2	12/2009	Primer	
D609,819	S	2/2010	Tomes et al.	
D612,153	S	3/2010	Liao	
7,785,312	B2	8/2010	Thorne	
D638,137	S	5/2011	Gross et al.	
D662,218	S	6/2012	Pittman	
8,448,786	B2	5/2013	Tomes et al.	
D688,461	S	8/2013	Ambrefe et al.	
8,628,549	B2	1/2014	To et al.	
8,631,935	B2	1/2014	Tomes et al.	
8,678,190	B2	3/2014	Tomes et al.	
8,708,999	B2	4/2014	Hong	
D708,347	S	7/2014	Lober	
D708,759	S	7/2014	Heyman et al.	
D720,470	S	12/2014	Lober	
D720,471	S	12/2014	Angel et al.	
9,283,352	B2	3/2016	Tomes et al.	
9,522,753	B2	12/2016	Tomes et al.	
2002/0185406	A1	12/2002	Massengale	
2003/0031995	A1	2/2003	Laura	
2003/0038475	A1	2/2003	Stancil	
2003/0075474	A1	4/2003	Moyer et al.	
2003/0159969	A1	8/2003	McMichael et al.	
2004/0004019	A1*	1/2004	Busch	206/571
2004/0161732	A1	8/2004	Stump	
2004/0180822	A1*	9/2004	Grafton	A61L 27/34 514/2.4
2004/0195145	A1	10/2004	Roshdy	
2004/0238391	A1	12/2004	Pond	
2005/0022822	A1	2/2005	Santilli	
2005/0101905	A1	5/2005	Merry	
2005/0228691	A1	10/2005	Paparo	
2005/0256453	A1	11/2005	Nagamatsu	
2005/0285385	A1	12/2005	Bova	
2006/0009742	A1	1/2006	Solazzo	
2006/0029912	A1	2/2006	Kearby et al.	
2006/0088355	A1	4/2006	Ribi	
2006/0186010	A1	8/2006	Warnack	
2006/0264822	A1	11/2006	Nagamatsu	
2006/0271019	A1	11/2006	Stoller	
2007/0026472	A1	2/2007	Prokash et al.	
2007/0060908	A1	3/2007	Webster et al.	
2007/0065792	A1	3/2007	Schubarth	
2007/0084742	A1*	4/2007	Miller	A61B 17/3472 206/438
2007/0088330	A1	4/2007	House	
2007/0095699	A1	5/2007	Frieze	
2007/0142786	A1	6/2007	Lampropoulos	
2007/0161971	A1	7/2007	House	
2007/0225687	A1	9/2007	House	
2007/0299431	A1	12/2007	Jakubowski et al.	
2008/0116106	A1	5/2008	Lampropoulos et al.	
2008/0121553	A1	5/2008	Gobel	
2008/0221515	A1	9/2008	Nagamatsu	
2008/0283426	A1	11/2008	Primer et al.	
2008/0283433	A1	11/2008	Primer	
2009/0071854	A1	3/2009	Martin	
2009/0152160	A1	6/2009	Thompson et al.	
2009/0184026	A1	7/2009	Massengale et al.	
2009/0194453	A1	8/2009	Thorne et al.	
2009/0234346	A1	9/2009	McBride et al.	
2009/0236259	A1	9/2009	Hicks	
2010/0274205	A1	10/2010	Morelli et al.	
2010/0307942	A1	12/2010	Tomes et al.	
2010/0311026	A1	12/2010	Tomes et al.	
2011/0107494	A1	5/2011	Haines	
2011/0155599	A1	6/2011	Yakel et al.	
2011/0297147	A1	12/2011	Lick et al.	

FOREIGN PATENT DOCUMENTS

WO	WO-2005/027767	3/2005
WO	WO-2006/114466	11/2006
WO	WO-2007/045943	4/2007

OTHER PUBLICATIONS

"IPR 2015-00514—Patent Owner's Objection to Evidence", IPR 2015-00514—Patent Owner's Objection to Evidence Submitted During a Preliminary Proceeding; U.S. Pat. No. 8,678,190; Mailed Jul. 13, 2015.

"IPR 2015-00514—Patent Owner's Request for Adverse Judgement", U.S. Pat. No. 8,678,190; Mailed Jun. 23, 2015.

"IPR2015-00514—Scheduling Order", U.S. Pat. No. 8,678,190; Mailed Jun. 26, 2015.

"IPR2015-00514 Judgement—Termination of Proceeding", U.S. Pat. No. 8,678,190; Mailed Jul. 24, 2015.

"Australian First Exam Report", AU Patent Application No. 2011351971; Patent Examination Report No. 1; dated Jul. 25, 2015.

Poon, Robert "Final OA", U.S. Appl. No. 14/265,920, filed Apr. 30, 2014; dated Oct. 2, 2015.

Hand, Melanie J., "NonFinal OA", U.S. Appl. No. 14/165,044, filed Jan. 27, 2014; dated Oct. 26, 2015.

Poon, Robert "NonFinal OA", U.S. Appl. No. 14/718,792, filed May 21, 2015; dated Nov. 19, 2015.

Vasat, Peter "Notice of Allowance", U.S. Appl. No. 12/785,064, filed May 21, 2010, dated Sep. 12, 2016.

Medline Industries vs. *CR Bard, Inc*; No. 14-cv-3618; C.R. Bard's LPR 3.1 Contentions; Filed Nov. 24, 2015.

"Office Action Received", Chinese App No. 201280035246.1: NonFinal OA; dated Sep. 16, 2015.

"Office Action", Australian Application No. 2011351971; Reference No. 35204298/GP; dated Feb. 18, 2016.

Notice of Allowance; EP Application No. 10251025.2-1501; Reference P112645EP00; dated Feb. 18, 2016.

Mackenzie, Kristian "Office Action", Canadian Application No. 2,705,670; Ref No. 15468-8; dated Apr. 25, 2016.

Hand, Melanie Jo "Appeal Decision", U.S. Appl. No. 12/785,064, filed May 21, 2010; Mailed May 18, 2016.

Poon, Robert "NonFinal OA", U.S. Appl. No. 15/067,903; filed Mar. 11, 2016, dated Jun. 30, 2016.

"Notice of Acceptance", Australian Application No. 2011351971; Filed Dec. 30, 2011; dated May 13, 2016.

"Office Action", Chinese Application No. 201280035246.1; Filed May 11, 2012; dated Jul. 15, 2016.

Medline Industries Inc. vs *C.R. Bard, Inc*; C.R. Bard's LPR 3.1 Contentions; Civil Action No. 1:16-cs-3529; Judge Sharon Johnson Coleman; Filed Aug. 26, 2016.

"Medline Catalog", *Turkel Safety Thoracentesis Procedure Trays by Covidien*; http://www.medline.com/jump/sku/x/MDPKDL566059; Unknown Publication date but believed to be prior to present application filing date.

"Medline Catalog", *Turkel Safety Thoracentesis Procedure Trays by Covidien*; 5"; http://www.medline.com/sku/item/MDPKDL566075; Unknown Publication date but believed to be prior to present application filing date.

"Medline Catalog", Paracentesis Trays by Covidien; http://www.medline.com/sku/item/MDPSWD568006; Unknown Publication Date but believed to be prior to filing of present application.

"Medline Catalog", *Argyle Turkel Safety Thoracentesis System by Covidien*; http://www.medline.com/sku/item/MDPKDL5014; Unknown Publication Date but believe to be prior to filing of present application.

(56) **References Cited**

OTHER PUBLICATIONS

"Medline Catalog", *Argyle Trocar Catheter Kits by Covidien*; http://www.medline.com/sku/item/MDPSWD565028; Unknown Publication Date but believed to be prior to filing of present application.
"Medline Catalog", *Paracentesis Trays by Halyard Health*; http://www.medline.com/sku/item/MDPBAA61450. Unknown Publication Date but believed to be prior to filing of present application.
"Medline Catalog", *Safe-T Thoracentesis/Paracentesis Tray by Carefusion*; http://www.medline.com/sku/item/MDPBXTTPT1000SP; Unknown publication date but believed to be prior to filing of present application.
"Medline Catalog", *Thoracentesis Trays by Carefusion*; http://www.medline.com/sku/item/MDPBXTPIG1280K; Unknown publication date but believed to be prior to filing of present application.
"Medline Catalog", *Argyle Turkel Safety Thoracentesis System by Covidien*; 6"; http://www.medline.com/sku/item/MDPKDL5016; Unknown Publication Date but believed to be prior to filing of present application.
Marcetich, Adam "Notice of Allowance", U.S. Appl. No. 13/860,902, filed Apr. 11, 2013, dated Sep. 14, 2016.
Cavanna, Mark "Non-Final Office Action", U.S. Appl. No. 29/479,600, filed Jan. 17, 2014; dated Sep. 26, 2016.
Poon, Robert "Final OA", U.S. Appl. No. 15/067,903, filed Mar. 11, 2016; dated Jan. 13, 2017.
Marcetich, Adam "Notice of Allowance", U.S. Appl. No. 14/165,044, filed Jan. 27, 2014, dated Feb. 28, 2017.
Mackenzie, Kristian "Office Action", Canadian Application No. 2,705,670, dated Feb. 10, 2017.
Mackenzie, Kristian "Office Action", Canadian Application No. 2,705,647; dated Feb. 10, 2017.
Hand, Melanie J., "Notice of Allowance", U.S. Appl. No. 13/860,902, filed Apr. 11, 2013; dated Aug. 4, 2015.
"Office Action", Chinese Application No. 201280035246.1; Filed May 11, 2012; Reference No. 10055U CIP5 CN; dated Nov. 28, 2016.
Hand, Melanie J., "NonFinal OA", U.S. Appl. No. 13/860,902, filed Apr. 11, 2013, dated Apr. 1, 2016.
Poon, Robert "Appeal Decision", U.S. Appl. No. 13/153,300, filed Jun. 3, 2011; dated Oct. 12, 2016.
Long, Fonya M "Appeal Decision", U.S. Appl. No. 13/154,265, filed Jun. 3, 2011; dated Oct. 6, 2016.
Poon, Robert "Appeal Decision", U.S. Appl. No. 13/374,509, filed Dec. 30, 2011; Mailed Oct. 24, 2016.
"Second Office Action", Chinese Application No. 201280035240.4; dated Jun. 23, 2016.
Mackenzie, Kristian "Office Action", Canadian Application No. 2,705,647; Ref No. 15468-P37235CA00; dated Apr. 21, 2016.
Chinese Application No. 201280035240.4; Filed May 24, 2012; dated Aug. 18, 2015.
Hand, Melanie Jo "Final OA", U.S. Appl. No. 13/860,902, filed Apr. 11, 2013; dated May 22, 2015.
Schultz, Ottmar "Extended European Search Report", EP Application No. 16177903.8-1501; Filed Jun. 30, 2009; dated Oct. 27, 2016.
Marcetich, Adam "Notice of Allowance", U.S. Appl. No. 13/860,902, filed Apr. 11, 2013; dated Nov. 8, 2016.
Marcetich, Adam M., "Final OA", U.S. Appl. No. 14/165,044, filed Jan. 27, 2014, dated Aug. 11, 2016.
"Intent to Grant", Chinese Application No. 201180066491.4: Flled Dec. 30, 2011; dated Jul. 6, 2016.
Poon, Robert "Notice of Allowance", U.S. Appl. No. 14/718,792, filed May 21, 2015; dated Feb. 2, 2016.
"Office Action", Chinese Application No. 201180066491.4; dated Nov. 11, 2015.
"IPR2015-00513—Patent Owner's Request for Adverse Judgement", U.S. Pat. No. 8,631,935, dated Jul. 23, 2015.
Poon, Robert "Final Office Action", U.S. Appl. No. 14/718,792, filed May 21, 2015; dated Jan. 5, 2016.
Medline Industries, Inc. vs *C.R. Bard, Inc*; No. 1:14-cv-03618; Medline Industries Inc's Opposition to C.R.Bard Inc's Motion for Leave to File Second Amended Answer to Add Counterclaim; Filed Oct. 20, 2015.
Medline Industries, Inc. vs *C.R. Bard. Inc*; No. 1:14-cv-03618; Notice of Medline Industries Inc's Motion to Dismiss C.R. Bard Inc's Inequitable Conduct Counterclaim and to strike affirmative defense for the '786 Patent; Filed Oct. 20, 2015.
"IPR2015-00513—Request for Adverse Judgement", IPR2015-00513—Request for Adverse Judgement; Granted—Proceedings Terminated; U.S. Pat. No. 8,631,935; Entered Aug. 11, 2015.
"IPR0215-00513 Scheduling Order", U.S. Pat. No. 8,631,935; Mailed Jul. 15, 2015.
Cavanna, Mark "Final OA", U.S. Appl. No. 29/479,600, filed Jan. 17, 2014; dated Jun. 1, 2017.
Marcetich, Adam "Notice of Allowance"; U.S. Appl. No. 14/793,455, filed Jul. 7, 2015; dated Jul. 20, 2017.
Medline Industries, Inc. vs *C.R. Bard, Inc*; No. 1:14-cv-03618; Defendant C.R. Bards, Inc's Second Amended Answer to Second Amended Complaint; Filed Sep. 25, 2015.
Medline Industries, Inc. vs *C.R. Bard, Inc*; No. 14-cv-3618; Memorandum in Support of C.R. Bard's Motion for Leave to File Second Amended Answer to Add Counterclaim. Filed Sep. 25, 2015.
"IPR2015-00514 Decision Institution of Inter Partes Review", IPR2015-00514; U.S. Pat. No. 8,678,190, mailed Jun. 26, 2015; Decision Institution of Inter Partes Review.
"IPR2015-00509 Institution Decision", IPR2015-00509; U.S. Pat. No. 8,448,786; Mailed Jul. 15, 2015; Decision Denying Institution of Inter Partes.
"IPR 2015-00514 Petitioner's Request for Rehearing", IPR 2015-00514 Petitioner's Request for Rehearing; U.S. Pat. No. 8,678,190; Dated Jul. 10, 2015.
"IPR2015-00511 Institution Decision", IPR2015-00511; U.S. Pat. No. 8,631,935; Entered Jul. 15, 2015; Decision Denying Institution of Inter Partes Review.
"IPR2015-00513 Institution Decision", IPR2015-00513 Institution Decision; U.S. Pat. No. 8,631,935; Entered Jul. 15, 2015; Decision Institution of Inter Partes Review.
Marcetich, Adam. Non-Final Office Action, U.S. Appl. No. 14/793,455, filed Jul. 7, 2015; dated May 3, 2017.
Office Action, Chinese Application No. 201280035240.4; dated Apr. 1, 2017.
Poon, Robert. Final Office Action, U.S. Appl. No. 14/718,792, filed May 21, 2015; dated Jan. 5, 2016.
Poon, Robert. Notice of Allowance, U.S. Appl. No. 15/067,903; dated Aug. 23, 2017.
Pothier, Andrew. Office Action, Canadian Application No. 2,822,905; Reference No. 15468-P44352CA00; dated May 1, 2017.
"DVD", Entitled "*Preventing UTI: Care and Catheterization Techniques*"; Publication Date unknown but believed to be prior to 2007.
Poon, Robert "Non-Final Office Action", U.S. Appl. No. 12/495,148, filed Jun. 30, 2009; first inventor: Jennifer E. Tomes; dated Aug. 4, 2010.
Yuan, Minqiang "Non-Final Office Action", Chinese Application No. 200920267201.2, dated Sep. 9, 2010.
European Patent Office, "Extended EPO Search Report", EPO Application No. 10251025.2, In the Name of Medline Industries, dated Sep. 29, 2010.
Medline, "Medline Aritcle/Brochure", Published 2008.
Yuan, Minquiang "Non-Final Office Action", Chinese Application No. 200920267201.2; dated Jun. 4, 2010.
European Patent Office, "Extended EPO Search Report", Application No. 10251024.5, In the Name of Medline Industries, dated Oct. 18, 2010.
Chinese Patent Office "First Office Action", CN Application No. 201020219785.9; dated Nov. 18, 2010; Filed Jun. 3, 2010.
Poon, Robert "Final Office Action", U.S. Appl. No. 12/495,148, flled Jun. 30, 2009, dated Mar. 3, 2011.
Prange, Sharon M., "Response to First Office Action", U.S. Appl. No. 12/004,796, filed Dec. 21, 2007; dated Oct. 28, 2009.
Cavanna, Mark "Notice of Allowance", U.S. Appl. No. 29/362,279, filed May 21, 2010, dated Sep. 19, 2011.

(56) **References Cited**

OTHER PUBLICATIONS

Poon, Robert "NonFinal Office Action", U.S. Appl. No. 12/846,675, filed Jul. 29, 2010; dated Dec. 22, 2011.
Cavanna, Mark "Notice of Allowance", U.S. Appl. No. 29/338,022, filed Jun. 3, 2009; dated Oct. 1, 2009.
Cavanna, Mark "NonFinal Office Action", U.S. Appl. No. 29/380,474, filed Dec. 26, 2012; dated Mar. 27, 2012.
Poon, Robert "NonFinal Office Action", U.S. Appl. No. 12/647,515, filed Dec. 27, 2009; dated Jun. 28, 2012.
Cavanna, Mark "Ex Parte Quayle Action", U.S. Appl. No. 29/380,474, filed Dec. 6, 2010; Mailed Aug. 14, 2012.
Poon, Robert "Restriction Requirement", U.S. Appl. No. 12/647,515, filed Dec. 27, 2009; dated May 23, 2012.
Byun, Sung C., "PCT Search Report", PCT/US2011/068193; Filed Dec. 30, 2011; dated Aug. 22, 2012.
Poon, Robert "Final Office Action", U.S. Appl. No. 12/846,675, filed Jul. 29, 2010; dated Sep. 26, 2012.
Poon, Robert "NonFinal Office Action", U.S. Appl. No. 13/374,509, filed Dec. 30, 2011; dated Oct. 2, 2012.
Poon, Robert "NonFinal Office Action", U.S. Appl. No. 13/153,300, filed Jun. 3, 2011; dated Oct. 1, 2012.
Poon, Robert "NonFinal OA", U.S. Appl. No. 12/495,148, filed Jun. 30, 2009; dated Oct. 4, 2012.
Byun, Sung C., "PCT Search Report", PCT/US2012/039311; Filed May 24, 2011; dated Oct. 25, 2012.
Hand, Melanie J., "NonFinal OA", U.S. Appl. No. 13/155,026, filed Jun. 7, 2011; dated Nov. 30, 2012.
Byun, Sung Cheal "PCT Search Report and Written Opinion", PCT/US2012/037524; Filed May 11, 2012; dated Nov. 16, 2012.
"EPO Intent to Grant", EPO Application No. 10251024.5; Filed Jun. 2, 2010; dated Nov. 2, 2012.
Hand, Melanie J., "NonFinal OA", U.S. Appl. No. 12/785,064, filed May 21, 2010; dated Feb. 1, 2013.
Pass, Natalie "NonFinal OA", U.S. Appl. No. 13/153,265, filed Jun. 3, 2011; dated Mar. 5, 2013.
Hand, Melanie J., "Notice of Allowance", U.S. Appl. No. 13/155,026, filed Jun. 7, 2011; dated Feb. 1, 2013.
Hand, Melanie J., "NonFinal OA", U.S. Appl. No. 13/115,053, filed Jun. 7, 2011; dated May 9, 2013.
Poon, Robert "Final OA", U.S. Appl. No. 12/647,515, filed Dec. 27, 2009; dated May 13, 2013.
Hand, Melanie J., "Final OA", U.S. Appl. No. 12/785,064, filed May 21, 2010; dated Jun. 5, 2013.
Pass, Natalie "Final OA", U.S. Appl. No. 13/153,265, filed Jun. 3, 2011; dated Jul. 12, 2013.
Poon, Robert "Final Office Action", U.S. Appl. No. 12/495,148, filed Jun. 30, 2009; dated Jul. 31, 2013.
Poon, Robert "Final OA", U.S. Appl. No. 13/374,509, filed Dec. 30, 2011; dated Aug. 6, 2013.
Poon, Robert "Final OA", U.S. Appl. No. 13/153,300, filed Jun. 3, 2011; dated Aug. 6, 2013.
Poon, Robert "NonFinal OA", U.S. Appl. No. 12/846,675, filed Jul. 29, 2010; dated Sep. 10, 2013.
Cavanna, Mark "Notice of Allowance", U.S. Appl. No. 29/444,526, filed Jan. 31, 2013; dated Oct. 17, 2013.
Hand, Melanie J., "Notice of Allowance", U.S. Appl. No. 13/155,054, filed Jun. 7, 2011; dated Oct. 28, 2013.
Poon, Robert "Notice of Allowance", U.S. Appl. No. 12/495,148, filed Jun. 30, 2009; dated Nov. 20, 2013.
"Instructions", Naming a character website. URL: <https://web.archive.org/web/20080410122058/http://www.wilihow.com/Make-Your-Own-Anime-or-Mange-Character>. 2008.Retreived from Internet Dec. 10, 2013.
Naming Characters on Cards website. URL:<https://web.archive.org/web/20060219171403/http://www.hubbardscupboard.org/brown_bear_brown_bear.html>. (2006) . . . Retrieved form Internet Dec. 11, 2013.
Dictionary definition m-w. URL:<http://www.merriam-webster.com/dictionary/brave>. Retrieved fro Internet Dec. 10, 2013.
Dictionary definition m-w. URL:<http://ww.merriam-webster.com/dictionary/reassure>. Retrieved from Internet Dec. 10, 2013.
Lion King Sticker website. URL: <http://tlkobession.wuffpaws.org/OldSite/games/games2.html>. 1996 Retrieved from Internet Dec. 10, 2013.
Lion Sticker Activity Book website. URL: <http://www.amazon.com/Disneys-Simbas-Pride-Sticker-Activity/dp/B0018DOJZA>. 1998 Retrieved from Internet. Dec. 10, 2013.
"Examiner's Answer", U.S. Appl. No. 13/153,265, filed Jun. 3, 2011; dated Dec. 17, 2013.
Poon, Robert "NonFinal OA", U.S. Appl. No. 12/647,515, filed Dec. 27, 2009; dated Dec. 18, 2013.
Poon, Robert "Final OA", U.S. Appl. No. 12/846,675, filed Jul. 29, 2010; dated Dec. 18, 2013.
"Extended EPO Exam Report", EPO App No. 10251025.2; Filed Jun. 2, 2010; dated Dec. 17, 2013.
Poon, Robert "Notice of Allowance", U.S. Appl. No. 12/846,675, filed Jul. 29, 2010; dated Apr. 30, 2014.
Gimenez Burgos, R "Extended European Search Report", 11854003.8; Filed Dec. 30, 2011; dated Jun. 3, 2014.
"Bardex I.C. Infection Control Foley Tray", *Bard Infection Control System; Bardex I.C. Directions for Use Infection Control Foley Tray*; Copyright Dated 2006.
"Bardex I.C. Complete Care StateLock Device 350 ml Urine Meter Foley Tray with Bacteriostatic Collection System", *Bard Infection Control System; Bardex I.C. Complete Care Directions for Use*; Copyright Dated Sep. 2006.
"Bardex I.C. Infection Control 350ml Urine Meter Foley Tray", *Bard Infection Control System; Bardex I.C. Urine Meter Foley Tray Directions for Use*; Copyright Dated 2006.
"Bard Medical Division Care & Catheterization Script", *Care & Catheterization/Preventing UTI Script for education video; Preventing UTI: Care and Catheterization Techniques*; Copyright 2006; AV0512-06 R12/05 XXX.
Medline Industries, Inc. vs *C.R. Bard, Inc*; No. 14-cv-3618; C.R. Bard's LPR 2.3 Contentions—Initial Non-Infringement; Exhibits 1 and A-H; Dated Sep. 5, 2014.
Medline Industries, Inc. vs *C.R. Bard, Inc*; No. 1:14-cv-03618; Medline Industries, Inc.'s Response to C.R. Bard's Initial Invalidity Contentions; Exhibits A-H; Dated Sep. 19, 2014.
Medline Industries, Inc. vs *C.R. Bard, Inc*; No. 1:14-cv-3618; Responses to Medline Industries, Inc.'s First set of Requests for the Production of Documents; Dated Sep. 26, 2014.
Medline Industries, Inc. vs *C.R. Bard, Inc*; No. 1:14-cv-03618; Response to Medline Industries, Inc.'s First Set of Interrogatories; dated Sep. 26, 2014.
"Publication", European Commission: Pharmaceutical Committee "A Guideline on the Readability of the Label and Package Leaflet of Medicinal Products for Human Use"; Dated Sep. 29, 1998.
"Bard Publication", "*A few important words about Catheter Care"; C.R. Bard, Inc*; Copyright 2001 C.R. Bard, Inc.
Dover Intermittent Catheter Tray—14 fr, Red Rubber; Website http://tinyurl.com/o4esrwh; Unknown Publication Date.
"YouTube Training Video", https://www.youtube.com/watch?v=ISBya_5cIM.
"YouTube Training Video", https://www.youtube.com/watch?v=YwqcRUP35nl&list=UUG7a6tFPh1wvF0QDM Z3DarQ.
"NonFinal Office Action", U.S. Appl. No. 13/680,902, filed Apr. 11, 2014; dated Dec. 2, 2014.
"Inter Partes Review Petition for 8,448,786", U.S. Pat. No. 8,448,786; Filed Dec. 30, 2014; Mailed Dec. 30, 2014.
"Inter Partes Review Petition", IPR Exhibit—Kimmel Declaration U.S. Pat. No. 8,448,786; Dr. Robert M. Kimmel Declaration; Received Dec. 30, 2014.
"Inter Partes Review Petition", Exhibit; Kimmel CV—Dr. Robert M. Kimmel; Mailed Dec. 30, 2014.
"Inter Partes Review Petition", IPR Exhibit—Susan Carrow Declaration 8,448,786 patent; dated Dec. 30, 2014.
"Inter Partes Review Petition", Exhibit; Carrow CV—Susan Carrow CV; Mailed Dec. 30, 2014.
"Inter Partes Review Petition", Exhibit; EC Guideline 2009; "Guideline on the Readability of the Labelling and Package Leaflet

(56) **References Cited**

OTHER PUBLICATIONS

of Medicinal Products for Human Use"; Revision 1 Published Jan. 12, 2009 (Dec. 1, 2009); Mailed Dec. 30, 2014.
"Inter Partes Review Petition", Exhibit—EC Guideline 1998; "*A Guideline on the Readability of the Label and Package Leaflet of Medicinal Products for Human Use*"; Published Sep. 29, 1998 (Sep. 29, 1998); Mailed Dec. 30, 2014.
"Inter Partes Review Petition", Exhibit—Soroka Glossary wrap; Illustrated Glossary of Packaging Terminology; second edition; publication date unknown.
"Inter Partes Review Petition", Exhibit—Soroka Glossary 'Bag'; *Illustrated Glossary of Packaging Terminology, second edition*; Walter Soroka; publication unknown.
"Inter Partes Review Petition", Exhibit—*Encyclopedia Dictionary of Medicine, Nursing and Allied Health*; Miller Keane, Seventh Edition.
"Inter Partes Review Petition", Exhibit—Dorland's Definition of Bag; *Dorland's Illustrated Medical Dictionary; 31st Edition*; Publication Date Unknown.
"Inter Partes Review Petition", Exhibit—Nursing Standard; Article in Learning Zone—Continue Professional Development; "*Reducing the risks associated with urinary catheters*"; Published Mar. 25, 2009.
"Inter Partes Review Petition", Exhibit—Websters Dictionary Definition of Dispose; *Webster's Third New International Dictionary*; Copyright 2003; publication date unknown.
"Inter Partes Review Petition", Exhibit—Bard DFU; *Bardex Infection Control Foley Tray*; Copyright 2006, publication date unknown.
"Inter Partes Review Petition", Exhibit—Medline Initial Infringement Contentions; *Medline Industries* vs. *C.R. Bard*; Dated Aug. 22, 2014.
"Inter Partes Review Petition", Exhibit—FDA Article; *Guidance for the Content of Premarkt Notifications fro Conventional and Antimicrobial Foley Catheters*; http://www.fda.gov/medicaldevices/deviceregulationandguidance/guidancedocuments/ucm080884.htm; Unknown Publication Date.
"Inter Partes Review Petition", Exhibit—Bardex DFU; *Directions for Use/Patient Education Information—Urology*; Unknown Publication Date.
"Inter Partes Review Petition", Exhibit—Mosby's Pocket Guide Excerpt; *Mosby's Pocket Guide to Basic Skills and Procedures*; Sixth Edition; Perry & Potter; "Urinary Catheter: Indwelling, Straight, Care and Removal"; Unknown Publication Date.
"Inter Partes Review Petition", Exhibit—Health Protection Scotland; CAUTI Maintenance Bundel; Version 2, Feb. 2008.
"Inter Partes Review Petition", Exhibit—FAQs "Catheter-Associated Urinary Tract Infection"; Unknown Publisher; Unknown Publication Date.
"Inter Partes Review Petition for U.S. Pat. No. 8,631,935", Inter Partes Review Petition for U.S. Pat. No. 8,631,935 for claims 1-4 and 11-20; Filed Dec. 30, 2014.
"Inter Partes Review Petition for U.S. Pat. No. 8,631,935", Inter Partes Review Petition for U.S. Pat. No. 8,631,935 for Claims 7-8, 10, 21-23, 25, 27-28, and 30-34; Filed Dec. 30, 2014.
"Inter Partes Review Petition for U.S. Pat. No. 8,678,190", Inter Partes Review Petition for U.S. Pat. No. 8,678,190; Filed Dec. 30, 2014.
"Inter Partes Review Petition", Exhibit—Kimmel Declaration for U.S. Pat. No. 8,631,935 claims 1-4 and 11-20; Declaration of Dr. Robert M. Kimmel; Mailed Dec. 30, 2014.
"Inter Partes Review Petition", Exhibit—Declaration of Susan Carrow for U.S. Pat. No. 8,631,935 claims 1-4 and 11-20; Mailed Dec. 30, 2014.
"Inter Partes Review Petition", Exhibit—Response to Office Action in U.S. Appl. No. 12/495,148; Application Filed Jun. 30, 2009; Response Filed Nov. 19, 2010.
"Inter Partes Review Petition", Exhibit—RCE Filed November May 31, 2011 for U.S. Appl. No. 12/495,148; Application Filed Jun. 30, 2009.
"Inter Partes Review Petition", Exhibit—Amendment filed on Apr. 3, 2013 for U.S. Appl. No. 12/495,148; Application Filed Jun. 30, 2009.
"Inter Partes Review Petition", Exhibit—Infection Control Today Article; *Medical Center Cuts Catheterizations by 21 Percent with Foley Catheter Management System*; Published 2010.
"Inter Partes Review Petition", Exhibit—Morning Start Article; "*Floyd Medical Center Reduces Catheter-Associated Urinary Tract Infections 83 Percent and Catheter Use by 23 Percent*"; Published Jan. 2011.
"Inter Partes Review Petition", Exhibit—Medical News Today Article; '*Getting To Zero:' Medlines' Erase Cauti Program Helps Hospitals Reduce Catheter Use by 20 Percent*; Article Date Apr. 13, 2011.
"Inter Partes Review Petition", Exhibit—The Journal of Healthcare Contracting, Oct. 2012; "*Catheter-associated urinary tract infections*".
"Inter Partes Review Petition", IPR Exhibit—Kimmel Declaration for U.S. Pat. No. 8,631,935 claims 1-4 and 11-20; Declaration of Dr. Robert M. Kimmel; Mailed Dec. 30, 2014.
"Inter Partes Review Petition", IPR Exhibit—Carrow Declaration for U.S. Pat. No. 8,631,935 claims 1-4 and 11-20; Susan Carrow Declaration; Mailed Dec. 30, 2014.
"Inter Partes Review Petition", IPR Exhibit—Kimmel Declaration for U.S. Pat. No. 8,631,935 claims 7-8, 10, 21-23, 25, 27-28, and 30-34; Declaration of Dr. Robert M. Kimmel; Mailed Dec. 30, 2014.
"Inter Partes Review Petition", IPR Exhibit—Kimmel Declaration for U.S. Pat. No. 8,768,190; Declaration of Dr. Robert M. Kimmel; Mailed Dec. 30, 2014.
"Inter Partes Review Petition", IPR Exhibit—Carrow Declaration for U.S. Pat. No. 8,768,190; Declaration of Susan Carrow; Mailed Dec. 30, 2014.
Poon, Robert "NonFinal OA", U.S. Appl. No. 14/265,920, filed Apr. 30, 2014; dated Dec. 30, 2014.
Gimenez Burgos, R "European Examination Report", European Application No. 11 854 003.8-1659; Ref SJG/P128064EP00; dated Jan. 22, 2015.
Gimenez Burgos, R "Extended European Search Report", EPO App No. 12 79 3939; Reference No. SJG/P130269EP00; dated Jan. 27, 2015.
Gimenez Burgos, R "Extended European Search Report", EU App No. 12792423.1-1659/2713933; PCT/US2012039311; REference No. SJG/P130270EP00; dated Jan. 27, 2015.
"Bard IPR Exhibit", "Inter Partes Review Petition", IPR Exhibit—Carrow Declaration for U.S. Pat. No. 8,631,935; Susan Carrow Declaration; Mailed Dec. 30, 2014.
"Article 94(3) EPC Examination", European Application No. 10 251 025.2-1501; Reference P112645EP00; dated Mar. 13, 2015.
Poon, Robert "Final OA", U.S. Appl. No. 12/647,515, filed Dec. 27, 2009; dated Apr. 7, 2015.
"Office Action", Chinese Application No. 201180066491.4; dated Mar. 24, 2015.
"Inter Partes Review—Patent Owner Response", Inter Partes Review—Patent Owner Response; U.S. Pat. No. 8,448,786; IPR2015-00509; Filed Apr. 22, 2015.
"Inter Partes Review—Patent Owner Response", Inter Partes Review—Patent Owner Response; U.S. Pat. No. 8,631,935; Inter Partes Review No. IPR2015-00511; Filed Apr. 22, 2015.
"Inter Partes Review—Patent Owner Response", Inter Partes Review—Patent Owner Response; U.S. Pat. No. 8,631,935; Inter Partes Review No. IPR2015-00513; Filed Apr. 21, 2015.
"Inter Partes Review—Patent Owner Response", Inter Partes Review—Patent Owner Response; U.S. Pat. No. 8,678,190; Inter Partes Review No. IPR2015-00514; Filed Apr. 21, 2015.

* cited by examiner

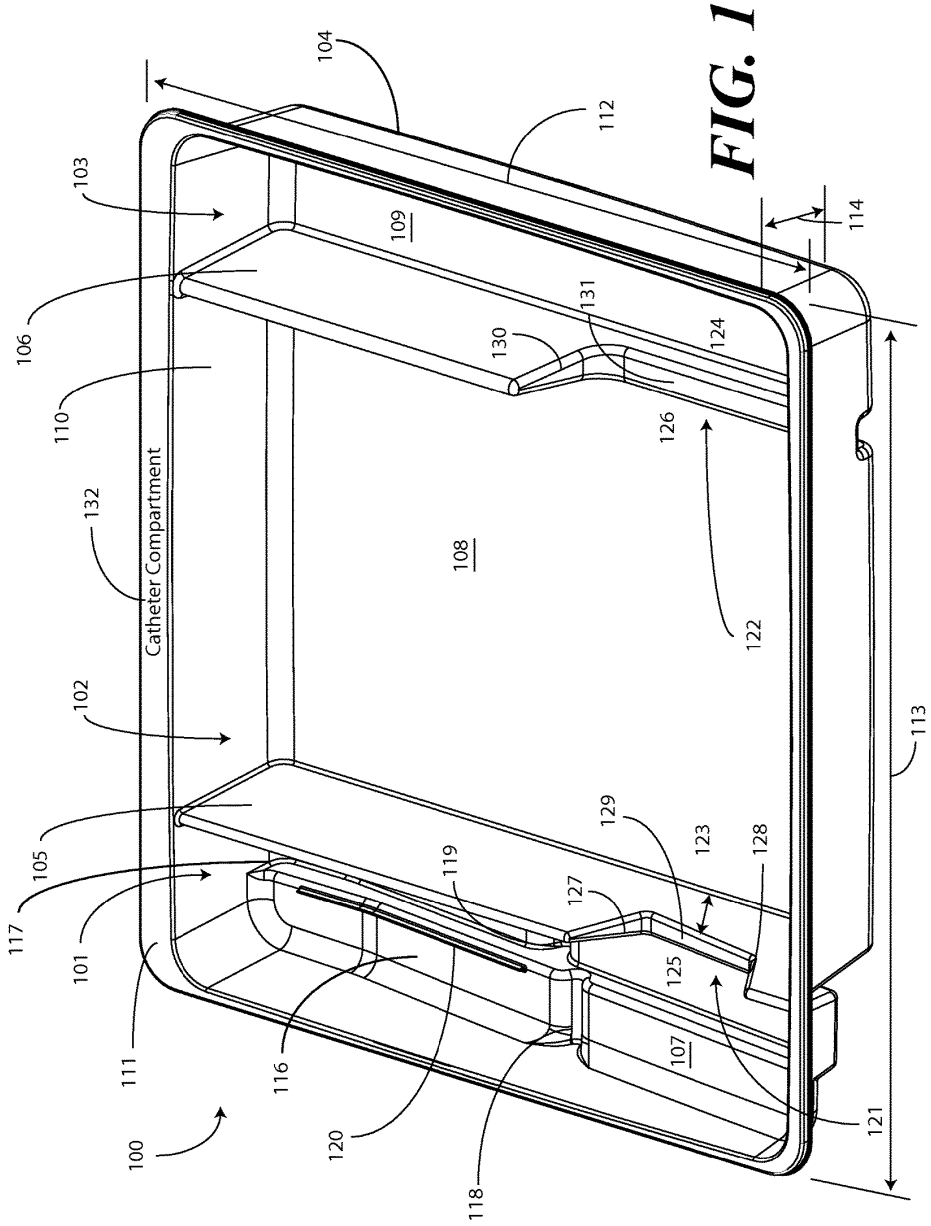

FIG. 1

Bard Exhibit 1004.0512

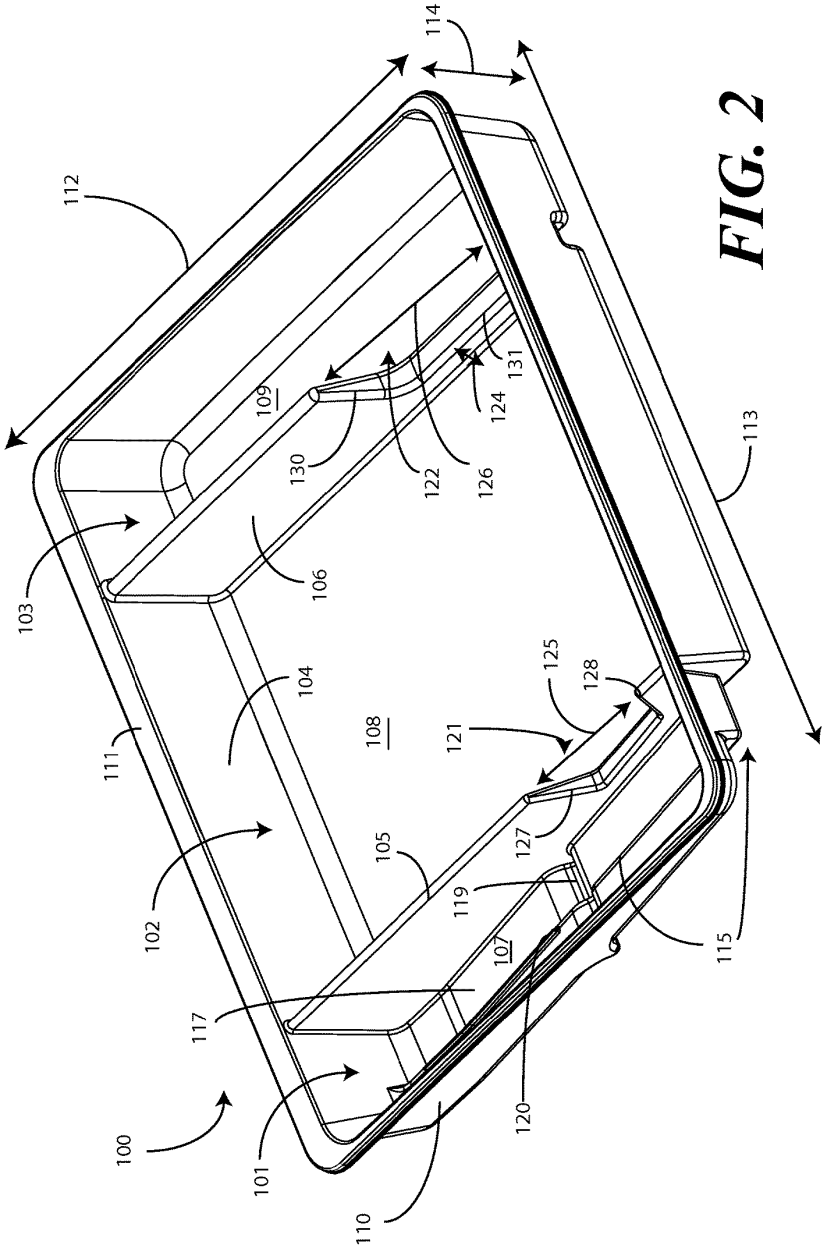
100
101
102
103
104
105
106
107
108
109
110
111
112
113
114
115
117
119
120
121
122
124
125
126
127
128
130
131

FIG. 2

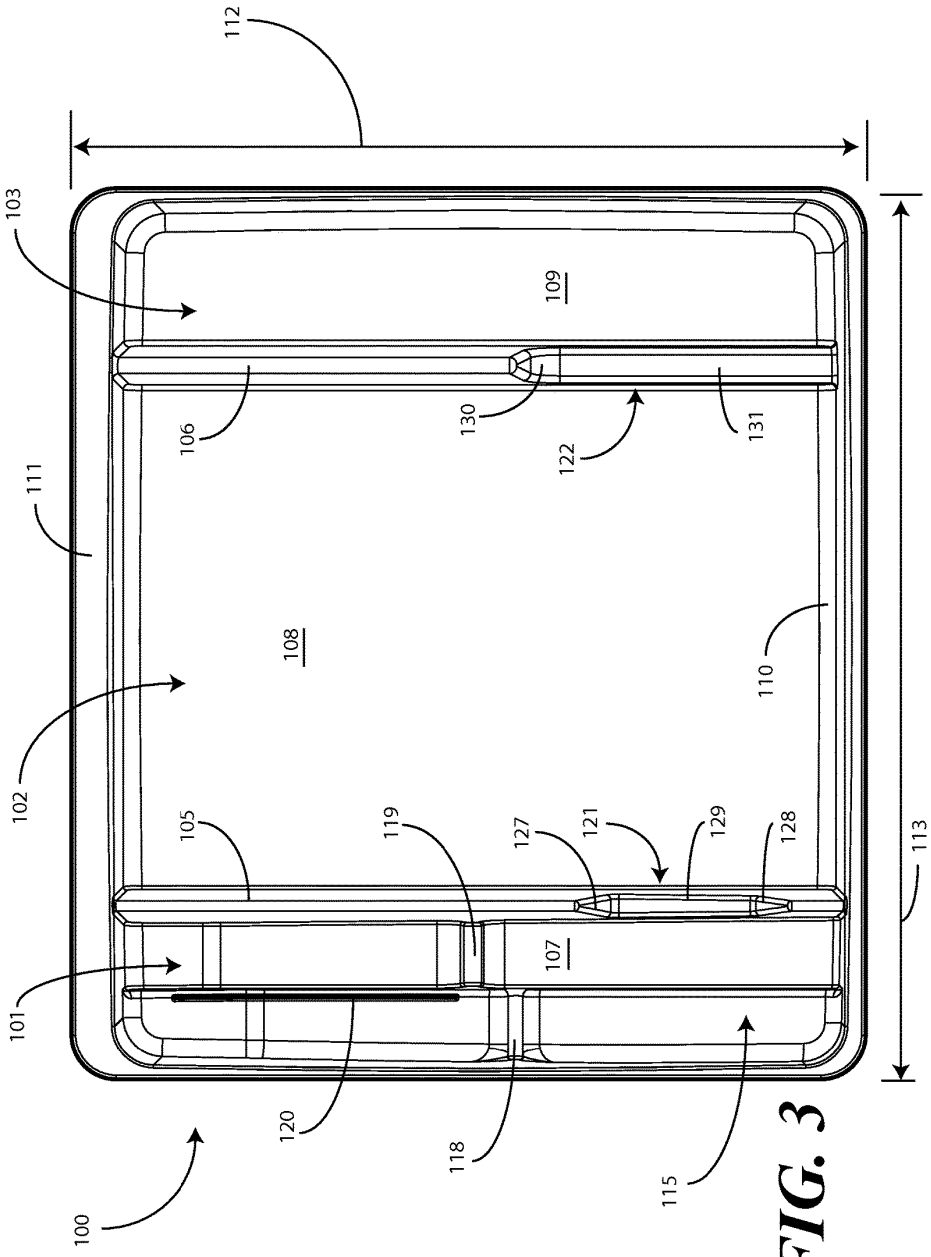
100
101
102
103
105
106
107
108
109
110
111
112
113
115
118
119
120
121
122
127
128
129
130
131

FIG. 3

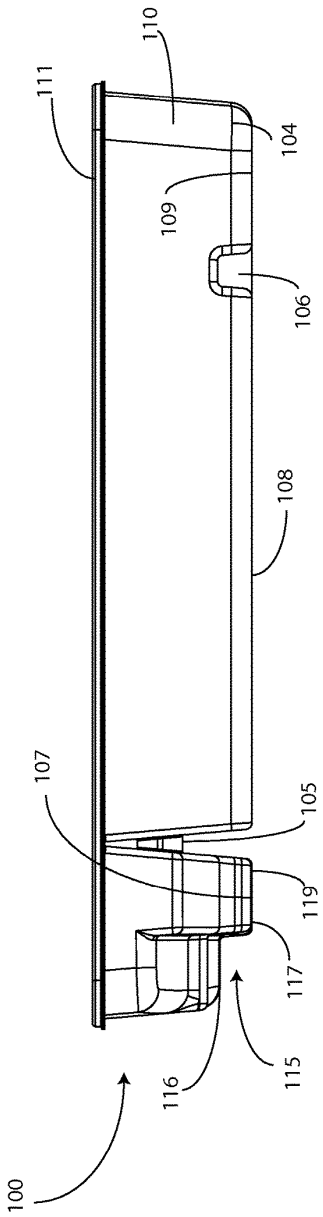
100
116
115
117
119
107
105
108
106
109
104
110
111

FIG. 4

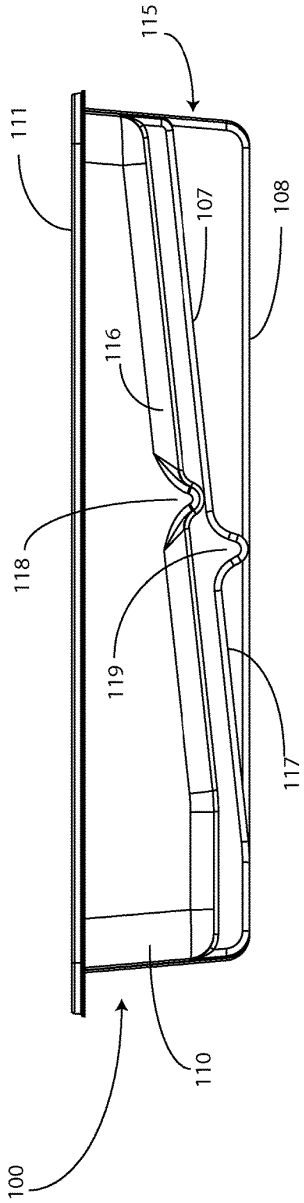
100
110
117
119
118
116
107
108
111
115

FIG. 5

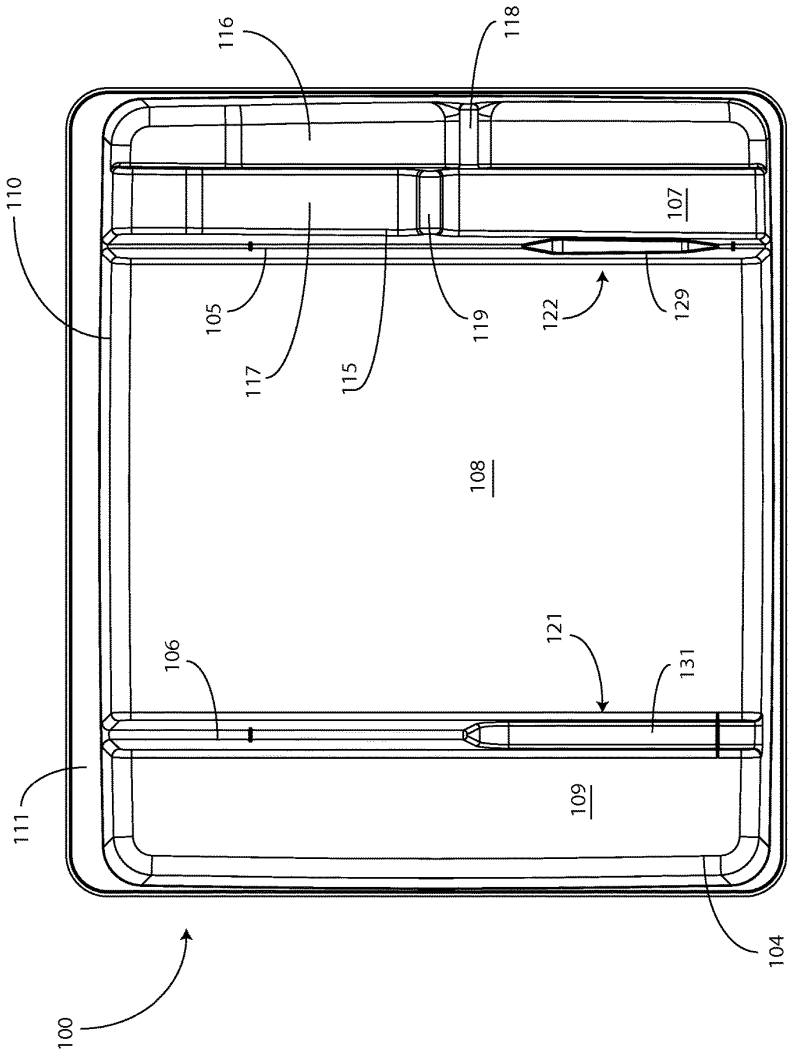
100
110
111
116
118
105
117
115
119
122
129
107
108
106
121
131
109
104

FIG. 6

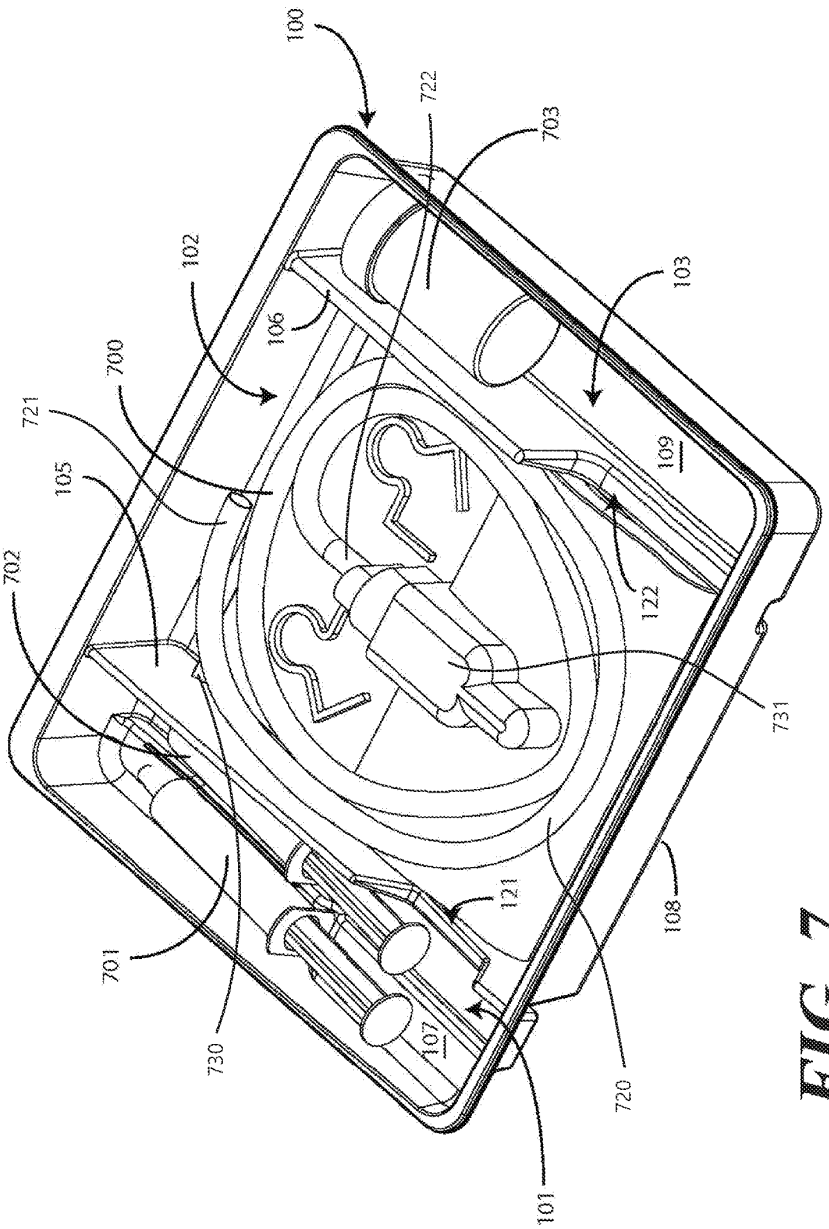
100
722
703
102
106
103
700
721
105
702
109
122
731
701
730
107
121
108
720
101

FIG. 7

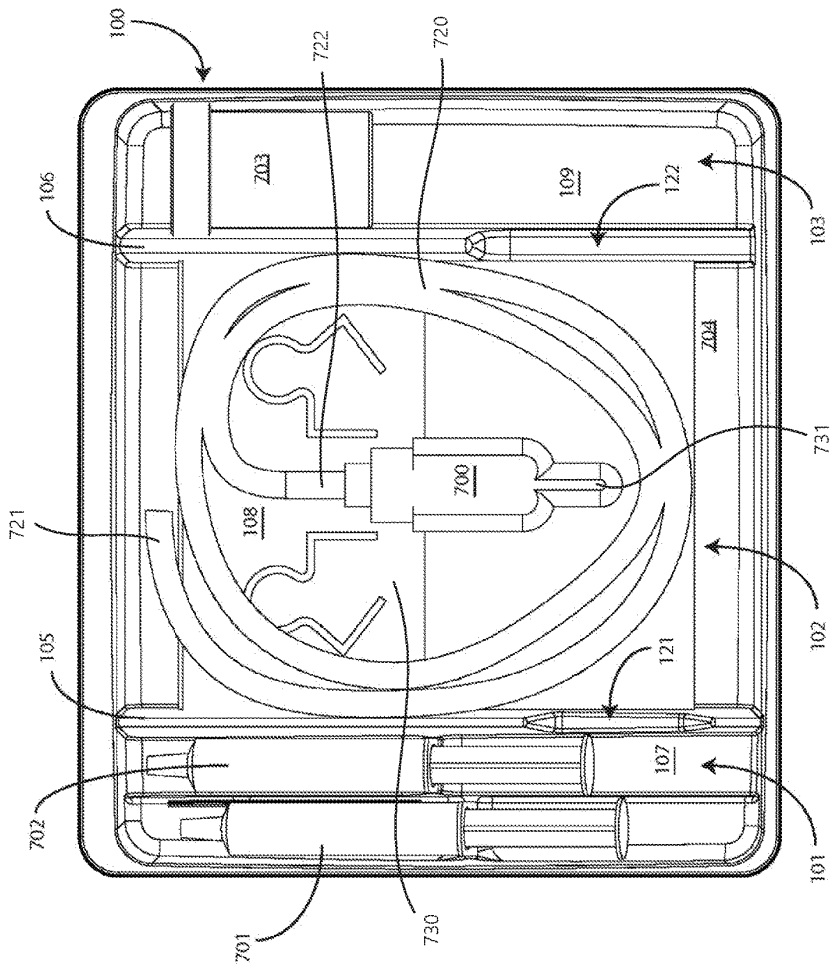
100
722
720
106
703
109
122
103
721
108
700
731
704
102
105
121
702
107
101
701
730

FIG. 8

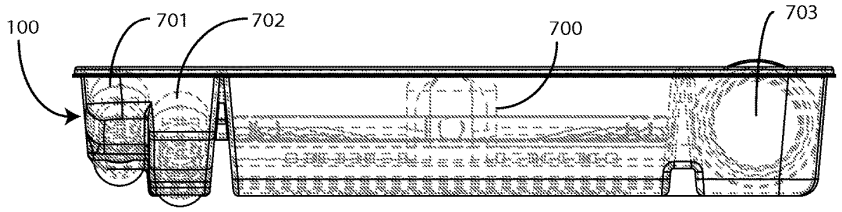

FIG. 9

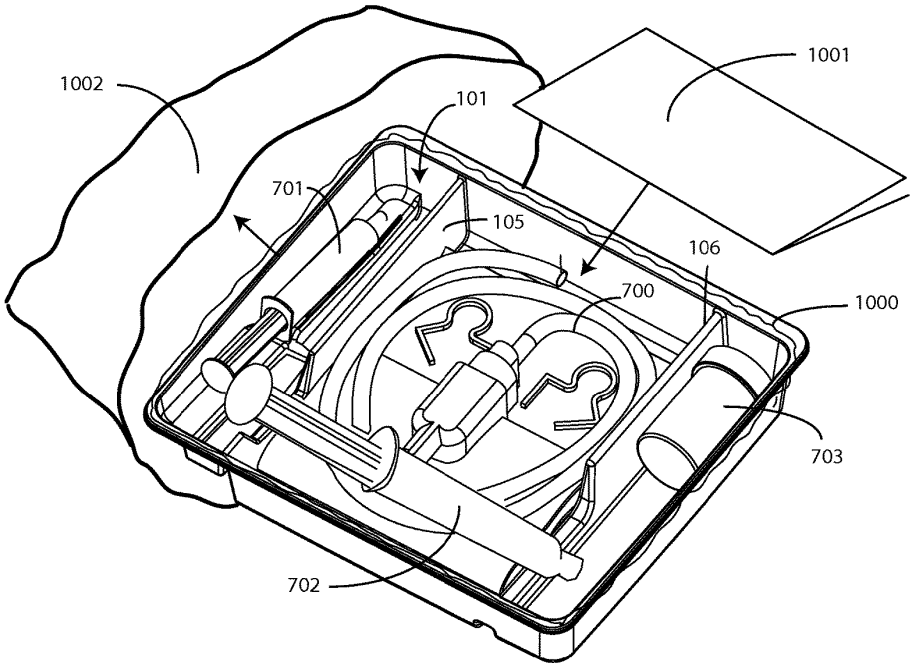

FIG. 10

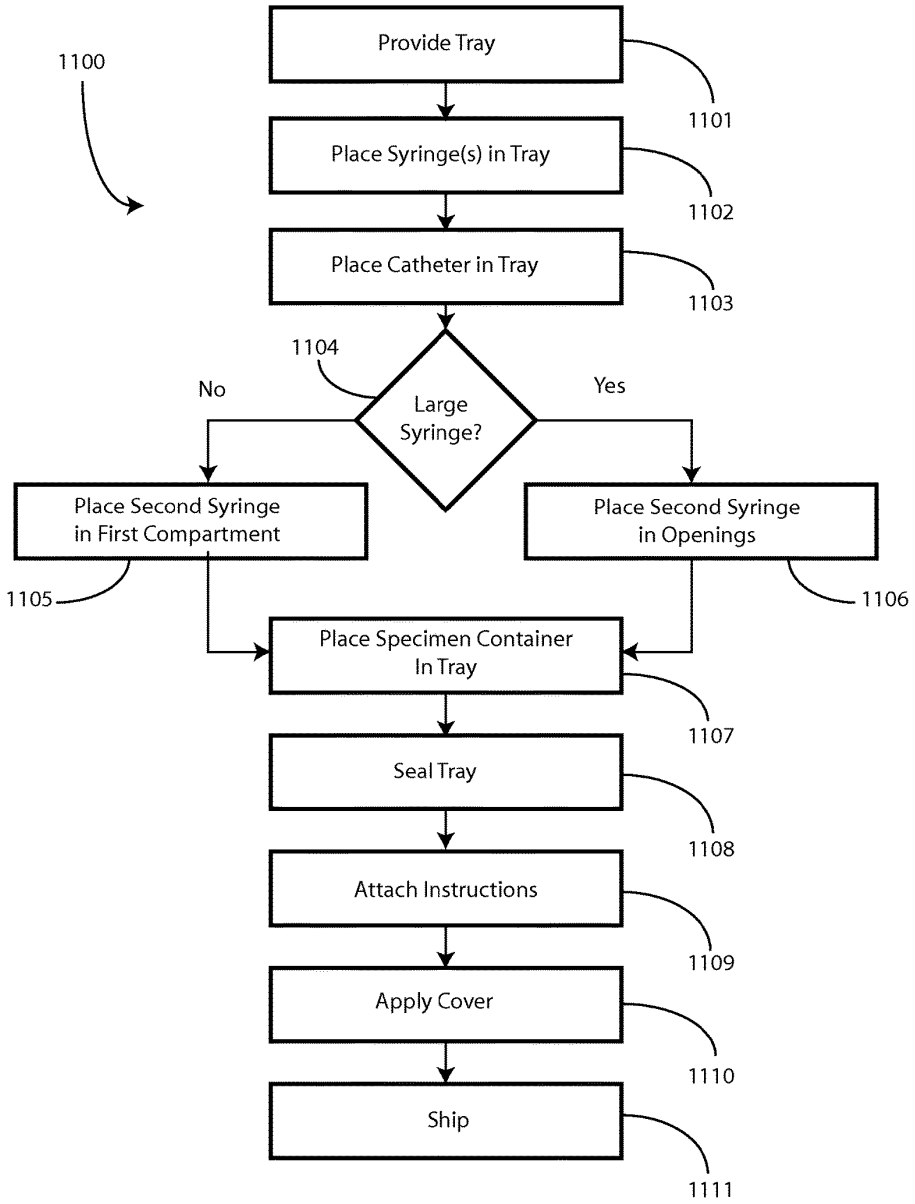
1100
Provide Tray
1101
Place Syringe(s) in Tray
1102
Place Catheter in Tray
1103
1104
Large Syringe?
No
Yes
Place Second Syringe in First Compartment
1105
Place Second Syringe in Openings
1106
Place Specimen Container In Tray
1107
Seal Tray
1108
Attach Instructions
1109
Apply Cover
1110
Ship
1111

FIG. 11

CATHETER TRAY, PACKAGING SYSTEM, AND ASSOCIATED METHODS

CROSS REFERENCE TO PRIOR APPLICATIONS

This application is a continuation from, and claims priority and benefit under 35 USC §120 from, U.S. application Ser. No. 12/846,675, filed Jul. 29, 2010, now U.S. Pat. No. 8,746,452, which application is a divisional application from and claims priority and benefit under 35 USC §121 from, U.S. application Ser. No. 12/495,148, filed Jun. 30, 2009, now U.S. Pat. No. 8,631,935, which application claims priority and benefit under 35 USC §119(e) from Provisional Application No. 61/183,629, filed Jun. 3, 2009.

BACKGROUND

Technical Field

This invention relates generally to storage containers for medical devices, and more particularly to a storage container for a long, flexible medical implement, such as a catheter, and related medical devices.

Background Art

Medical devices, including surgical instruments, supplies, and so forth, are generally shipped from manufacturer to medical services provider in sterile packaging. For example, a scalpel may be shipped to a surgeon in a plastic, vacuum-sealed, sterile package. Similarly, bandages may be shipped in paper, plastic, or paper composite sterile wrappers. When the medical services provider is ready to use the medical supply, the sterile package is removed. The medical services provider then uses the object in accordance with the procedure being performed.

While conventional packaging works well for objects having a generally unchanging form factor, special considerations have to be taken into consideration for some medical supplies. By way of example, catheter assemblies and other flexible equipment is generally shipped in a coiled configuration. Once the sterile packaging is removed, the catheter must be uncoiled prior to use. Care must be taken in shipping, unwrapping, and using the catheter. For instance, if a catheter is inadvertently bent, kinked, or otherwise damaged, it may no longer be suitable for use. Compounding this issue, catheters are available in a variety of lengths ranging from 100 centimeters to over 250 centimeters.

Traditional catheters are packaged, for example, in individual packaging. The catheter and card are then sealed in a sterile plastic wrap. These catheters are prone to damage in shipment, storage, and when being unpacked, as the card and wrap provide little physical protection.

Some manufacturers have started shipping catheters and other similar devices in flat plastic trays. For example, U.S. Pat. No. 6,068,121 to McGlinch teaches one such tray. The tray has several specifically contoured loops such that one universal tray will accommodate several different sized catheters. Such packaging presents a problem, however, in that large amounts of storage space are taken with a universal tray, especially when a relatively short catheter is shipped therein. Additionally, when in use, these trays occupy large amounts of a medical service provider's sterile workspace or table, leaving little room for related components, such as lubricants, fluid bags, and so forth.

There is thus a need for an improved container for flexible medical devices or catheters that facilitates more effective and simpler deployment of the device during a procedure.

BRIEF DESCRIPTION OF THE DRAWINGS

The accompanying figures, where like reference numerals refer to identical or functionally similar elements throughout the separate views and which together with the detailed description below are incorporated in and form part of the specification, serve to further illustrate various embodiments and to explain various principles and advantages all in accordance with the present invention.

FIG. **1** illustrates a top, front, right perspective view of one embodiment of a tray for a catheter or similar assembly in accordance with embodiments of the invention.

FIG. **2** illustrates a top, front, left perspective view of one embodiment of a tray for a catheter or similar assembly in accordance with embodiments of the invention.

FIG. **3** illustrates a top plan view of one embodiment of a tray for a catheter or similar assembly in accordance with embodiments of the invention.

FIG. **4** illustrates a front elevation view of one embodiment of a tray for a catheter or similar assembly in accordance with embodiments of the invention.

FIG. **5** illustrates a cut-away, left elevation view of one embodiment of a tray for a catheter or similar assembly in accordance with embodiments of the invention.

FIG. **6** illustrates a bottom plan view of one embodiment of a tray for a catheter or similar assembly in accordance with embodiments of the invention.

FIG. **7** illustrates a top, front, right perspective view of one embodiment of a tray for a catheter or similar assembly, with a catheter and corresponding procedural devices disposed therein, in accordance with embodiments of the invention.

FIG. **8** illustrates a top plan view of one embodiment of a tray for a catheter or similar assembly, with a catheter and corresponding procedural devices disposed therein, in accordance with embodiments of the invention.

FIG. **9** illustrates a transparent, front elevation view of one embodiment of a tray for a catheter or similar assembly, with a catheter and corresponding procedural devices disposed therein, in accordance with embodiments of the invention.

FIG. **10** illustrates a perspective view of one embodiment of a tray for a catheter or similar assembly, with a catheter and corresponding procedural devices disposed therein, along with instructions and packaging, in accordance with embodiments of the invention.

FIG. **11** illustrates a method of manufacturing one embodiment of a tray for a catheter or similar assembly, with a catheter and corresponding procedural devices disposed therein, in accordance with embodiments of the invention.

Skilled artisans will appreciate that elements in the figures are illustrated for simplicity and clarity and have not necessarily been drawn to scale. For example, the dimensions of some of the elements in the figures may be exaggerated relative to other elements to help to improve understanding of embodiments of the present invention.

DETAILED DESCRIPTION OF THE INVENTION

Embodiments of the invention are now described in detail. Referring to the drawings, like numbers indicate like parts throughout the views. As used in the description herein

and throughout the claims, the following terms take the meanings explicitly associated herein, unless the context clearly dictates otherwise: the meaning of "a," "an," and "the" includes plural reference, the meaning of "in" includes "in" and "on." Relational terms such as first and second, top and bottom, and the like may be used solely to distinguish one entity or action from another entity or action without necessarily requiring or implying any actual such relationship or order between such entities or actions. Also, reference designators shown herein in parenthesis indicate components shown in a figure other than the one in discussion. For example, talking about a device (**10**) while discussing figure A would refer to an element, **10**, shown in figure other than figure A.

Embodiments of the present invention provide a tray configured to accommodate a coiled medical device such as a catheter or catheter assembly. In addition to accommodating the coiled medical device, embodiments of the present invention are also configured to contain devices and materials intended for use with the coiled medical device.

Using a catheter assembly as an example, when a catheter assembly is inserted into a patient, sterile water may be used to inflate the catheter. Additionally, the catheter may be coated in a lubricating jelly prior to insertion into the patient. Fluids and other samples may then be monitored and obtained from the patient via the catheter. Embodiments of the present invention provide a single container **100** configured to accommodate not only the catheter assembly **700** and fluid bag **730**, but also syringes **701**, **702** containing sterile water or lubricants. Further, the tray can accommodate a sterile specimen jar **703** or capturing samples taken from the patient via the catheter.

In addition to simply accommodating these corresponding medical devices, in one embodiment the tray is configured to provide the medical services provider with mnemonic devices instructing them in which order to use each device. For example, a compartment containing syringes, in one embodiment, includes an inclined, stair-stepped bottom member to present the plungers of each syringe at an easy to reach angle and at different heights based upon order of use.

Another advantage of embodiments of the present invention is that compartments have multi-purpose functionality. For example, in one embodiment, a container configured to accommodate a syringe having lubricating jelly disposed therein is also configured to be used as a lubricating jelly applicator. A medical services provider first dispenses the lubricating jelly into the syringe compartment. The medical services provider then passes the catheter from another compartment through an opening in a barrier separating the compartments into the lubricating jelly. As such, the tray not only serves as a shipping and storage container for an assembly of devices used with a catheter procedure, but also as an application device to assist a medical services provider in using those products together.

Turning now to FIGS. **1-6**, illustrated therein are views of one embodiment of a tray **100** configured to accommodate a catheter assembly in accordance with embodiments of the invention. FIG. **1** illustrates a top, front right perspective view of the tray **100**. FIG. **2** illustrates a top, front, left perspective view of the tray **100**. FIG. **3** illustrates a top plan view of the tray **100**. FIG. **4** illustrates a front elevation view of the tray **100**. FIG. **5** illustrates a cut-away, left elevation view of one embodiment of a tray **100**. Likewise, FIG. **6** illustrates a bottom plan view of the tray **100**. For simplicity of discussion, these figures will be referred to collectively with like reference numerals referring to identical or functionally similar elements throughout the separate views.

The tray **100**, in one embodiment, is formed by a contoured surface **104** that defines the various features and compartments of the tray **100**. The contoured surface **104** of the tray **100** can be manufactured in various ways. For example, in one embodiment, the tray **100** can be thermally formed on a mold from a soft thermoplastic, such as styrene or polystyrene. In another embodiment, the tray **100** can be injection molded. In another embodiment, the tray can be poured on a mold using a quick setting plastic, epoxy, or resin. Other methods of manufacture will be obvious to those of ordinary skill in the art having the benefit of this disclosure.

Exemplary dimensions for one embodiment of the tray **100** are as follows: The length **112** can be between nine and twelve inches, such as ten inches. One illustrative length **112** may be 10.380 inches. Similarly, the width **113** can be between eight and eleven inches, such as nine inches. One illustrative width **113** is 9.250 inches. The height **114** can be between one and three inches. One illustrative height **114** is 1.750 inches.

In one embodiment, the tray **100** includes three main compartments: a first compartment **101**, a second compartment **102**, and a third compartment **103**. The first compartment **101** is separated from the second compartment **102** by a first barrier **105**. The second compartment **102** is separated from the third compartment **103** by a second barrier **106**.

In one embodiment, the compartments are open from the top of the tray **100**—the top being opposite the base members of the tray **100**—and are bounded on the bottom by a first base member **107**, a second base member **108**, and a third base member **109**. The compartments are bounded on the sides by a perimeter wall **110**. In the illustrative "open top" embodiment of FIG. **1**, the perimeter wall **110** ends in a horizontal flange **111** extending substantially orthogonally from the perimeter wall **110**. It will be clear to those of ordinary skill in the art having the benefit of this disclosure that embodiments other than that shown in FIG. **1** are possible without departing from the spirit and scope of the invention. For instance, the top of the tray **100** could have a hinged or snap-coupled lid that is opened or removed to reveal the compartments there beneath.

In one illustrative embodiment, the tray **100** is configured to hold or otherwise accommodate all of the necessary devices and materials to perform a catheter-based procedure on a patient. Said differently, the tray **100** is configured to hold not only the catheter assembly, but the medical devices corresponding to catheter use as well. Using one illustrative procedure as an example, the following devices will be used: a syringe holding sterile water, a syringe holding lubricating jelly or another equivalent lubricant, a catheter assembly, skin cleansing or preparation materials, and a specimen jar. The various compartments and features of the tray **100** shown in FIGS. **1-6** will be described for use with these devices. As will be described in more detail below, additional objects can be included with the tray, such as one or more towels, a drape to cover the patient, rubber gloves, hand sanitizing materials, printed instructions, and so forth. The syringe holding sterile water, syringe holding lubricating jelly, catheter assembly, and specimen jar are used for illustration purposes only, as it will be clear that other objects may be added to or substituted for these objects. Further, subsets of these objects may be used.

In one embodiment suitable for procedures using the syringe holding sterile water, syringe holding lubricating jelly, catheter assembly, and specimen jar, in one embodiment, the tray **100** is configured such that these objects are ordered in accordance with their use during the procedure.

For example, in one embodiment the tray **100** includes a first compartment **101** for accommodating one or more syringes, a second compartment **102** for accommodating the catheter assembly, and a third compartment **103** for accommodating the specimen jar. These devices stowed in the various compartments will be illustrated and described with respect to FIGS. **7-10** below. The discussion of FIGS. **1-6** will include the features of the tray **100** that make the tray **100** suitable for accommodating these devices.

For example, in one embodiment the first compartment base member **107** includes a stair-stepped contour **115** suitable for accommodating a plurality of syringes at different heights. For example, a first step portion **116** of the stair-stepped contour **115** may be at a different height within the tray **100** than a second step portion **117** of the stair-stepped contour. In the illustrative embodiment of FIGS. **1-6**, the first step portion **116**—which is disposed farther from the first barrier **105** than the second step portion **117**—is shallower than the second step portion **117**. Said differently, the second step portion **117** is disposed at a greater depth within the tray **100** than the first step portion **116**.

The stair-stepped contour **115** can be used as mnemonic device when multiple syringes are stored within the first compartment **101**. For example, it may be intuitive that a syringe placed on a higher step portion may need to be used first. This intuition is further enforced when the higher step portion is disposed farther to the left in a left-to-right usage configuration. Thus, a user receives a mnemonic reminder to use a syringe disposed on the first step portion **116** prior to a syringe disposed on the second step portion **117**, as it is both higher and farther to the left.

Where syringes are stowed in the first compartment **101**, the first compartment base member **107** can further be configured for syringe ease of use. For example, in one embodiment the first compartment base member **107** is inclined relative to other compartment base members. In the illustrative embodiment of FIGS. **1-6**, the second compartment base member **108** and third compartment base member **109** are substantially coplanar with each other. Further, the second compartment base member **108** and third compartment base member **109** are generally flat in these views, although it will be clear to those of ordinary skill in the art having the benefit of this disclosure that contours could be incorporated into one or both of these base members.

In this illustrative embodiment, however, the first compartment base member **107** is configured to be inclined relative to one or both of the second compartment base member **108** and third compartment base member **109**. As such, the stair-stepped contour **115** forms a ramp upon which syringes may be placed so that the plunger of each syringe is predisposed to project upward and out of the tray **100**. Said differently, the stair-stepped contour **115** is configured such that the first step portion **116** and the second step portion **117** are disposed in a non-parallel orientation relative to the second compartment base member **108**. This configuration makes it easier for a medical services provider to grasp the syringes and remove them from the tray **100**.

The first compartment base member **107** may include other features suitable for accommodating one or more syringes as well. In one embodiment, one or both of the first step portion **116** and second step portion **117** include recesses **118**,**119** for accommodating a syringe flange. These recesses **118**,**119** generally function to prevent the syringes from sliding lengthwise within the first compartment **101**. Similarly, in one embodiment one or both of the first step portion **116** and the second step portion **117** include protrusions **120** that help to prevent the syringes from sliding laterally within the first compartment **101**.

In one embodiment, one or both of the first barrier **105** and the second barrier **106** include openings disposed therein. In the illustrative embodiment shown in FIGS. **1-6**, the first barrier **105** includes a first opening **121** between the first compartment **101** and the second compartment **102**. Similarly, the second barrier **106** includes a second opening **122** between the second compartment **102** and the third compartment **103**. Each of these openings has an opening depth associated therewith. Similarly, each opening has an opening width associated therewith. In the illustrative embodiment of FIGS. **1-6**, the first opening **121** is bounded by a first opening base member **129** and two inclined first opening side members **127**,**128**, while the second opening **122** is bounded by a second opening base member **131**, an inclined second opening side member **130**, and the perimeter wall **110**.

While the opening depths can be the same, in one embodiment the opening depths are different. For example, in the illustrative embodiments of FIGS. **1-6**, the first opening **121** has a first opening depth **123** that is less than the second opening depth **124** of the second opening **122**. Similarly, in one embodiment the opening widths are different. For example, in the illustrative embodiments of FIGS. **1-6**, the first opening **121** has a first opening width **125** that is less than the second opening width **126** of the second opening **122**. Such a disparity in opening depths and widths, as well as the inclusion of inclined opening side members, provides an advantage in some applications.

For instance, in many catheter procedures a pair of syringes—such as syringes having a one-half inch diameter—fits easily into the first compartment **101** when the tray **100** is made with the illustrative dimensions set forth above. However, some procedures require one or more of the syringes to be larger. For example, some syringes are larger in diameter. These larger syringes are capable of nesting within the first opening **121** and second opening **122**. The inclined opening side members prevent the syringe from moving lengthwise, while the disparate opening heights present the plunger of the syringe to the medical services provider for easy removal from the tray **100**.

The stair-stepped contour **115**, working in tandem with the first opening **121**, gives the tray additional advantages over prior art catheter containers. For instance, when the first compartment **101** has a first compartment base member **107** configured with a stair-stepped contour **115**, the first compartment **101** can be used as a lubricant applicator for the catheter.

Specifically, the medical services provider may dispense the lubricating jelly along the second step portion **117**. As the second step portion **117** is lower in the tray **100** than the first step portion **116**, the second step portion **117** serves as a channel in which the lubricating jelly may spread. A medical services provider may then pass the catheter through the first opening **121**, through the channel formed by the second step portion **117**, i.e., along the second step portion **117** through the dispensed lubricating jelly, and out the top of the tray **100** to the patient. This feature of the tray **100** greatly eases the application of lubricating jelly to the catheter when compared to prior art solutions. In one embodiment, the tray **100** is packaged with printed instructions showing the medical services provider how to apply lubricating jelly in this manner.

This particular feature highlights another advantage of the "compartmentalized" structure of various embodiments of the invention. As the tray **100** includes multiple compart-

ments, various tasks associated with a catheterization procedure can be completed while keeping the catheter within the tray **100**. The ability to keep the catheter in the tray **100** reduces the risk that the catheter or corresponding devices will be contaminated with bacteria or microbes on other objects within the procedure room. For example, when the first compartment **101** is used to apply lubricating jelly to the catheter, the lubricating jelly can be applied while the catheter is contained within the tray **100**, thereby reducing the risk that the catheter will become contaminated. This correspondingly reduces the risk of infection for the patient receiving the catheter.

Prior art systems, for example such as those in which the catheterization procedure components are shipped in separate containers, may contribute to substandard techniques in that the catheter can become contaminated when moving it from its shipping container. Consequently, the patient can be at an elevated risk of infection as the catheter is moved from one tray to another. Embodiments of the present invention solve this problem by providing a single level tray **100** with compartments. Further, in one embodiment the first compartment **101** includes the first opening **121** so the catheter can stay in place during and after lubrication. By having easy access to the components disposed in the single level tray **100**, the medical services provider can more easily prepare and use the components within the tray **100**. This helps to minimize the risk of contaminating the patient or the sterile field during the procedure.

In one embodiment, the second step portion **117** is configured to be inclined at a shallower angle than the first step portion **116** in at least a portion opposite the recess **119** from the first opening **121**. When configured in such a fashion, the second step portion **117** includes a "cutdown" so that the catheter can stay within the channel both during and after lubrication.

Additionally, the catheter can be placed in both the first opening **121** and second opening **122** during lubrication. When positioned in this configuration, the second opening **122** helps to align the catheter with the first opening for easy passage through the lubrication channel formed by the second step portion **117**.

The tray **100** of FIGS. **1-6** includes additional advantages over prior art catheter packaging as well. For example, in one embodiment, instructions **132** or other graphical indicia can be printed, placed upon, or molded into the horizontal flange **111**. In one embodiment, compartment designations can be placed above each compartment to ensure the medical services provider uses the correct device or material at the correct time. In another embodiment, expiratory dates for materials or devices disposed within the tray **100** may be placed on the horizontal flange **111**. It will be obvious to those of ordinary skill in the art having the benefit of this disclosure that the invention is not so limited. Any number of various text or picture combinations can be printed on, placed upon, or molded into various parts of the tray. For instance, graphical indicia can be applied to the compartment base members in addition to the horizontal flange **111**. Note that the horizontal flanges, in one embodiment, can terminate in downwardly protruding vertical flanges for increased stability during the printing process.

Another advantage of the tray **100** is that its compartmentalized configuration helps to reduce the risk of contaminating a patient or compromising the sterile nature of the components stored in the tray **100**. Since both the catheter assembly and medical devices corresponding to catheter use are stored within the same tray **100**, the risk of cross-contamination between sterile work areas and non-sterile spaces is minimized. Further, by having the catheter assembly and the devices corresponding to catheter use stowed in a one-level tray rather than a multi-level, stacked configuration, the medical services provider can more easily prepare and use the catheter and corresponding devices disposed within the tray **100**.

Turning now to FIGS. **7-9**, illustrated therein is a tray having a catheter assembly **700**, syringes **701**,**702**, and a specimen container **703** stored therein as a catheter packaging system in accordance with one embodiment of the invention. As with FIGS. **1-6**, FIGS. **7-9** will be referred to collectively with like reference numerals referring to identical or functionally similar elements throughout the separate views. FIG. **7** illustrates a top, front, right perspective view of the catheter packaging system, while FIG. **8** illustrates a top plan view of the catheter packaging system. FIG. **9** illustrates a transparent, front elevation view of the catheter packaging system.

The illustrative catheter packaging system of FIGS. **7-9** includes a tray **100** having a first compartment **101**, a second compartment **102**, and a third compartment **103**. In this illustrative embodiment, the first compartment **101** is configured to accommodate syringes **701**,**702**. The second compartment **102** is configured to accommodate a coiled medical device, such as catheter assembly **700**. The catheter assembly **700** includes an indwelling (or Foley) catheter coupled to a fluid bag **730** by a tube **720**. The first end portion **721** of the tube **720** is coupled to the indwelling catheter and the second end portion **722** of the tube **720** is coupled to the fluid bag **730** via an anti-reflux device **731**. The third compartment **103** is configured to accommodate the specimen container **703**. The third compartment **103** can accommodate other materials as well, including skin sanitizers and cleansing liquids, solutions, or gels. As mentioned above, additional devices corresponding to catheter use, including towels, drapes, rubber gloves, and so forth, can be disposed in the tray **100** as well. As an illustration of this flexibility, a towel **704** is disposed beneath the catheter assembly **700**.

As illustrated in FIGS. **1-6**, each compartment of the tray **100** includes a compartment base member. Further, each compartment is separated by a barrier having an opening therein. A first barrier **105** having a first opening **121** therein separates the first compartment **101** from the second compartment **102**. Similarly, a second barrier **106** having a second opening **122** therein separates the second compartment **102** from the third compartment.

Syringes **701**,**702** are disposed in the first compartment, with one syringe **701** being supported at a different elevation within the tray than the other syringe **702**. The different elevations can be relative to each syringe **701**,**702**, or to other components of the tray **100**, such as the second compartment base member **108**. Said differently, one syringe **701** is supported by the first compartment base member **107** at a shallower depth within the tray **100** than the depth of the second compartment base member **108**. Further, where the first compartment base member **107** is inclined relative to other base members, one or both syringes **701**,**702** will be supported in a non-parallel configuration relative to the second compartment base member **108**. This is most readily seen in FIG. **9**.

As noted above, some medical procedures will call for more materials than can be accommodated by a syringe capable of fitting within the first compartment **101**. For such procedures, the tray **100** can be packed with larger syringes. A large syringe (not shown) can be supported laterally within the tray **100** when it is placed across the tray **100** such that it lies within both the first opening **121** of the first barrier

105 and the second opening 122 of the second barrier 106. Such a syringe will pass across the top of the catheter assembly 700, but will be held in place by the side members of each opening.

Turning now to FIG. 10, illustrated therein is an exploded view of the tray 100 having the catheter assembly 700, a pair of syringes 701,702, and a specimen container 703 disposed therein. In the configuration of FIG. 10, rather than having both syringes 701,702 disposed within the first compartment 101, one syringe 702 is disposed laterally in the first opening 121 and the second opening 122 of the first barrier 105 and second barrier 106, respectively.

Once the necessary components are disposed within the tray 100, the tray can be sealed with a CSR wrap 1000 to keep the internal components sterile. Printed instructions 1001 can then be attached or disposed upon the tray 100. In one embodiment, the printed instructions 1001 can tell the medical services provider how to perform a standard catheterization procedure. For instance, in one embodiment, the tray 100 is equipped with an adhesive label that can be used to identify the patient or specimen in the specimen container 703. Further, a label can be included to mark or otherwise identify the material in the fluid bag 730 attached to the catheter. Such labels can include pre-printed fields, such as date, time and name. Further the printed instructions 1001 can notify the medical services provider that the devices disposed within the tray 100 are ordered corresponding to use during the catheterization procedure.

In another embodiment, the printed instructions 1001 can inform the medical services provider of special instructions. For instance, in one embodiment the printed instructions 1001 can inform the medical services provider not to leave a catheter in a patient for more than forty-eight hours without a physician's approval. Where the printed instructions 1001 include such information, the labels included in the tray 100 may have pre-printed fields for the time of insertion that can be filled in by the medical services provider performing the catheterization procedure.

Once the printed instructions 1001 have been affixed to or placed with the tray 100, the assembly can be sealed in a sterile wrap 1002 such as a thermally sealed bag. Inclusion of a sterile wrap allows the instructions to be included with the tray assembly, yet outside the CSR wrap 1000. It will be clear to those of ordinary skill in the art having the benefit of this disclosure that the invention is not so limited, however. For example, the sterile wrap 1002 can be optional. Rather than including printed instructions 1001, the instructions for use can be printed on the CSR wrap 1000, thereby making the need for a sterile wrap optional.

Turning now to FIG. 11, illustrated therein is a method 1100 for manufacturing a packaged catheter assembly in accordance with embodiments of the invention. At step 1101, the manufacturer provides a tray (100) having at least a first compartment (101) for accommodating one or more syringes (701,702) and a second compartment (102) for accommodating a flexible medical device, such as a catheter assembly (700). As noted above, in one embodiment the first compartment (101) will have a first compartment base member (107) having an inclined, stair-stepped contour (115). The first compartment (101) and second compartment (102) can be separated by a first barrier (105) having an opening (121) therein.

Once the tray (100) is procured, the manufacturer can dispose at least one syringe (701) in the first compartment (101) at step 1102. In one embodiment, as determined at decision 1104, a second syringe (702) will be disposed in the first compartment (101) at step 1105. In another embodiment, the second syringe (702) will be disposed laterally within the first opening (121) and, where present, a second opening (122) at step 1106.

At step 1103, the manufacturer will place the catheter assembly (700) in the second compartment (102). Other components may be disposed in the tray (100) as well, including a specimen container (703) in a third compartment (103) at step 1107, towels, drapes, printed instructions, and so forth.

At step 1108, the tray (100) is sealed. At optional step 1109, the manufacturer can enclose printed instructions (1001). In one embodiment, the printed instructions (1001) will direct a user to discharge contents of at least one syringe into the first compartment (101) and to pass at least a portion of the catheter assembly (700) through the opening and into the contents to lubricate the catheter.

At step 1110, the manufacturer can place a sterile wrap about the tray (100) and the printed instructions (1001), where included. At step 1111, the completed assembly can be shipped to a medical services provider.

In the foregoing specification, specific embodiments of the present invention have been described. However, one of ordinary skill in the art appreciates that various modifications and changes can be made without departing from the scope of the present invention as set forth in the claims below. Thus, while preferred embodiments of the invention have been illustrated and described, it is clear that the invention is not so limited. Numerous modifications, changes, variations, substitutions, and equivalents will occur to those skilled in the art without departing from the spirit and scope of the present invention as defined by the following claims. Accordingly, the specification and figures are to be regarded in an illustrative rather than a restrictive sense, and all such modifications are intended to be included within the scope of present invention. The benefits, advantages, solutions to problems, and any element(s) that may cause any benefit, advantage, or solution to occur or become more pronounced are not to be construed as a critical, required, or essential features or elements of any or all the claims.

What is claimed is:

1. A kit, comprising:

a single level tray defining at least a first compartment and a second compartment, the first compartment bounded by a first compartment base member of the single level tray, the second compartment bounded by a second compartment base member of the single level tray, the single level tray including a barrier separating the first compartment from the second compartment, the barrier defining an opening;

a first syringe containing an inflation fluid, the first syringe disposed within the first compartment of the single level tray;

a second syringe containing a lubricant, the second syringe disposed within the single level tray, the first syringe and the second syringe configured for use during a catheterization procedure;

an indwelling catheter; and

a coiled tube coupling the indwelling catheter to a fluid receptacle, the indwelling catheter, the coiled tube, and the fluid receptacle disposed within the second compartment of the single level tray with the coiled tube being outside of the fluid receptacle, the opening of the barrier sized to receive a portion of the indwelling catheter when the indwelling catheter is passed from the second compartment into the first compartment to lubricate the indwelling catheter.

2. The kit of claim 1, wherein:

the first syringe and the second syringe are both within the first compartment; and

the single level tray defines a third compartment configured to accommodate at least one of a specimen container or a skin cleanser.

3. The kit of claim 1, wherein the second compartment base member and the first compartment base member are substantially coplanar.

4. The kit of claim 1, wherein the opening is bounded by an opening base member and two inclined opening side members.

5. The kit of claim 1, wherein each of the first compartment and the second compartment are accessible through a top opening defined by the single level tray, the top opening opposite the second compartment base member.

6. The kit of claim 1, wherein:

the indwelling catheter includes an inflatable portion configured to receive the inflation fluid from the first syringe to maintain the indwelling catheter within a patient.

7. The kit of claim 6, wherein each of the first syringe and the second syringe is contained within the single level tray at different depths within the single level tray.

8. The kit of claim 6, wherein the first compartment contains the first syringe at a shallower depth within the single level tray than the second syringe.

9. The kit of claim 1, further comprising printed instructions packaged with the single level tray, the printed instructions directing a user to discharge the lubricant from the second syringe into the first compartment.

10. The kit of claim 9, wherein the printed instructions further direct the user to pass at least a portion of the indwelling catheter into the first compartment, and through the lubricant discharged from the second syringe into the first compartment.

11. The kit of claim 1, wherein the single level tray defines a top opening through which the first compartment and the second compartment can be accessed, the kit further comprising:

a sterile wrap disposed about the single level tray covering at least the top opening.

12. The kit of claim 11, wherein when the sterile wrap is unwrapped from about the top opening such that at least the first syringe, the second syringe, and the indwelling catheter are revealed.

13. A kit, comprising:

a single level tray including a first compartment base member and a second compartment base member, the single level tray defining a first compartment and a second compartment, the first compartment base member forming a portion of a boundary of the first compartment, the second compartment base member forming a portion of a boundary of the second compartment, the single level tray including a barrier separating the first compartment from the second compartment;

a first syringe disposed within the first compartment of the single level tray, the first syringe containing an inflation fluid;

a second syringe disposed within the single level tray, the second syringe containing a lubricant; and

a catheter assembly including a coiled tube coupling an indwelling catheter to a fluid receptacle, the indwelling catheter including an inflatable portion configured to receive the inflation fluid from the first syringe to maintain the indwelling catheter within a patient, the fluid receptacle including an anti-reflux device, an end of the coiled tube coupled to the anti-reflux device, the coiled tube and the fluid receptacle disposed within the second compartment of the single level tray with at least a portion of the coiled tube being outside of the fluid receptacle and such that the fluid receptacle is between the second compartment base member and the coiled tube.

14. The kit of claim 13, wherein the coiled tube and the fluid receptacle are disposed within the second compartment of the single level tray with at least a portion of the fluid receptacle being beneath the coiled tube.

15. The kit of claim 13, wherein the barrier extends a length of the first compartment and defines an opening to receive a portion of the catheter assembly when a tip of the indwelling catheter is placed from the second compartment into the first compartment to lubricate the indwelling catheter.

16. The kit of claim 13, wherein the single level tray defines a top opening through which the first compartment and the second compartment can be accessed, the kit further comprising:

a sterile wrap disposed about the single level tray covering at least the top opening.

17. The kit of claim 16, wherein when the sterile wrap is unwrapped from about the top opening at least the first syringe, the second syringe, and the indwelling catheter are revealed.

18. A kit, comprising:

a single level tray defining a first compartment and a second compartment, the single level tray including a barrier separating the first compartment from the second compartment, the barrier extending a length of the first compartment and defining an opening;

a first syringe disposed within the first compartment of the single level tray, the first syringe containing an inflation fluid;

a second syringe disposed within the single level tray, the second syringe containing a lubricant; and

a catheter assembly including a coiled tube coupling an indwelling catheter to a fluid receptacle, the indwelling catheter including an inflatable portion configured to receive the inflation fluid from the first syringe to maintain the indwelling catheter within a patient, the coiled tube and the fluid receptacle disposed within the second compartment of the single level tray with at least a portion of the coiled tube being outside of the fluid receptacle, the opening defined by the barrier sized to receive a portion of the catheter assembly when a tip of the indwelling catheter is placed from the second compartment into the first compartment to lubricate the indwelling catheter.

19. The kit of claim 18, wherein the fluid receptacle includes an anti-reflux device, an end of the coiled tube coupled to the anti-reflux device.

20. The kit of claim 19, wherein:

the single level tray includes a first compartment base member and a second compartment base member, the first compartment base member forming a portion of a boundary of the first compartment, the second compartment base member forming a portion of a boundary of the second compartment; and

the coiled tube and the fluid receptacle are disposed within the second compartment of the single level tray such that the fluid receptacle is between the second compartment base member and the coiled tube.

21. The kit of claim **18**, wherein the single level tray defines a top opening through which the first compartment and the second compartment can be accessed, the kit further comprising:

a sterile wrap disposed about the single level tray covering at least the top opening.

22. The kit of claim **21**, wherein when the sterile wrap is unwrapped from about the top opening at least the first syringe, the second syringe, and the indwelling catheter are revealed.

* * * * *

(12) **INTER PARTES REVIEW CERTIFICATE** (2189th)

United States Patent
Adler et al.

(10) **Number: US 9,808,400 K1**
(45) **Certificate Issued: Jul. 7, 2021**

(54) **CATHETER TRAY, PACKAGING SYSTEM, AND ASSOCIATED METHODS**

(71) Applicants: **Deborah B. Adler; Alberto C. Savage; Earl D. Wilson; Jennifer E. Tomes; Jack E. Maze; Kenneth S. Chua; John Henry Kutsch**

(72) Inventors: **Deborah B. Adler; Alberto C. Savage; Earl D. Wilson; Jennifer E. Tomes; Jack E. Maze; Kenneth S. Chua; John Henry Kutsch**

(73) Assignee: **MEDLINE INDUSTRIES, INC.**

Trial Number:

IPR2019-00208 filed Nov. 7, 2018

Inter Partes Review Certificate for:

Patent No.: **9,808,400**
Issued: **Nov. 7, 2017**
Appl. No.: **14/265,909**
Filed: **Apr. 30, 2014**

The results of IPR2019-00208 are reflected in this inter partes review certificate under 35 U.S.C. 318(b).

INTER PARTES REVIEW CERTIFICATE
U.S. Patent 9,808,400 K1
Trial No. IPR2019-00208
Certificate Issued Jul. 7, 2021

AS A RESULT OF THE INTER PARTES REVIEW PROCEEDING, IT HAS BEEN DETERMINED THAT:

Claims **13**, **14**, **16** and **17** are cancelled.

* * * * *

EXHIBIT 12

US006158437A

United States Patent [19]

Vagley

[11] **Patent Number: 6,158,437**

[45] **Date of Patent: *Dec. 12, 2000**

[54] **METHOD OF PERFORMING A SURGICAL PROCEDURE AND ASSOCIATED SURGICAL INSTRUMENT SUPPORT TRAY**

[76] Inventor: **Richard T. Vagley**, 830 15th St., Oakmont, Pa. 15139

[*] Notice: This patent issued on a continued prosecution application filed under 37 CFR 1.53(d), and is subject to the twenty year patent term provisions of 35 U.S.C. 154(a)(2).

[21] Appl. No.: **08/796,653**

[22] Filed: **Feb. 5, 1997**

Related U.S. Application Data

[63] Continuation of application No. 08/417,498, Apr. 5, 1995, abandoned, which is a continuation of application No. 08/166,699, Dec. 14, 1993, abandoned.

[51] **Int. Cl.**[7] **B65D 85/62**

[52] **U.S. Cl.** **128/898**; 206/370; 206/570; 206/439; 206/561

[58] **Field of Search** 206/369, 370, 206/438, 63, 557, 558, 562, 563, 564, 570; 433/77, 79; 128/898

[56] **References Cited**

U.S. PATENT DOCUMENTS

D. 283,160	3/1986	Steinman	D24/31
3,726,026	4/1973	Borcherding	35/62
4,046,254	9/1977	Kramer	206/370
4,153,160	5/1979	Leigh	206/370
4,266,669	5/1981	Watson	206/370 X
4,596,329	6/1986	Eldridge, Jr.	206/370
4,793,483	12/1988	Holmes	206/438 X
4,828,113	5/1989	Friedland et al.	206/369 X
5,059,271	10/1991	Taub	156/306.3
5,174,453	12/1992	Stoeffler	206/570
5,289,919	3/1994	Fischer	206/63.5

Primary Examiner—Robert L. Nasser
Attorney, Agent, or Firm—David C. Jenkins; Arnold B. Silverman; Eckert Seamans Cherin & Mellott, LLC

[57] **ABSTRACT**

A method of performing a surgical procedure includes providing an instrument supporting tray having a plurality of surgical instruments positioned thereon adjacent to a plurality of instrument-identifying indicia disposed in predetermined relative positions. In performing the surgical procedure, the surgical instruments will be employed generally in the sequence in which they are positioned on the tray. The surgical instruments are identified by at least one of (a) graphics corresponding generally to the shape of the particular surgical instrument, (b) recesses conforming generally to the shape of the surgical instrument and (c) words and/or numbers providing identification thereof. In a preferred embodiment, the instrument-identifying indicia will be provided with different instruments in different sequences, depending upon the specific surgical procedure. In a further embodiment, the instrument-identifying indicia will be keyed both in terms of identity of instrument and sequence of presentation to the preference of the particular surgeon. The surgical instrument support of the present invention has a surgical instrument supporting surface for supporting a plurality of surgical instruments and instrument-identifying indicia disposed in predetermined relative position to establish a sequence which corresponds generally to the sequence in which the surgical instruments will be employed. The instrument-identifying indicia also serves to provide, by at least one of (a) graphics, (b) recesses and (c) words and/or numbers specific identification of the instrument.

26 Claims, 3 Drawing Sheets

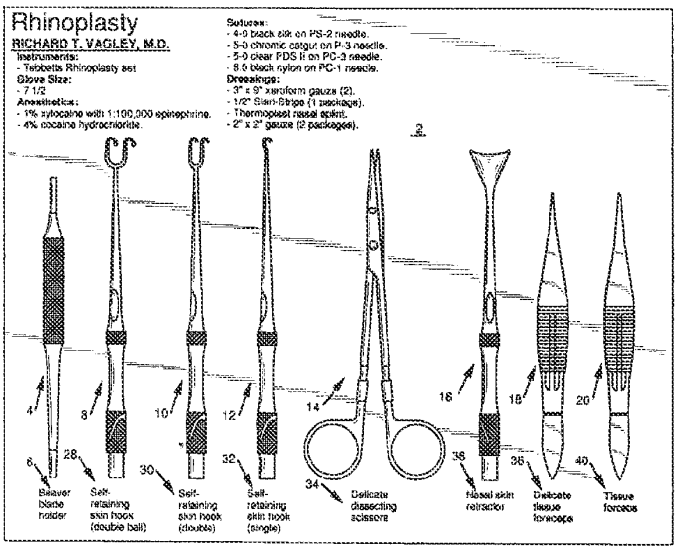

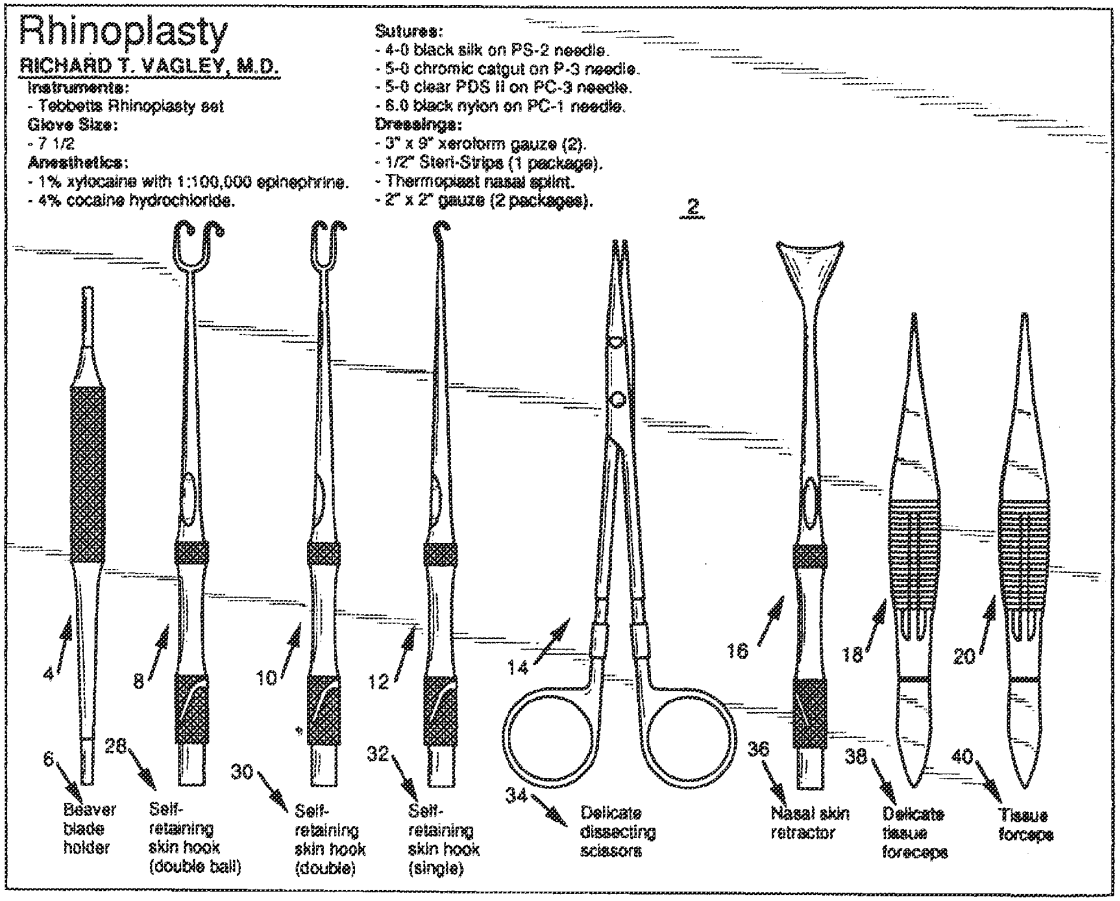
Rhinoplasty
RICHARD T. VAGLEY, M.D.
Instruments:
- Tebbetts Rhinoplasty set
Glove Size:
- 7 1/2
Anesthetics:
- 1% xylocaine with 1:100,000 epinephrine.
- 4% cocaine hydrochloride.
Sutures:
- 4-0 black silk on PS-2 needle.
- 5-0 chromic catgut on P-3 needle.
- 5-0 clear PDS II on PC-3 needle.
- 6.0 black nylon on PC-1 needle.
Dressings:
- 3" x 9" xeroform gauze (2).
- 1/2" Steri-Strips (1 package).
- Thermoplast nasal splint.
- 2" x 2" gauze (2 packages).
2
4
6
8
28
10
30
12
32
14
34
16
36
18
38
20
40
Beaver blade holder
Self-retaining skin hook (double ball)
Self-retaining skin hook (double)
Self-retaining skin hook (single)
Delicate dissecting scissors
Nasal skin retractor
Delicate tissue forceps
Tissue forceps

FIG. 1

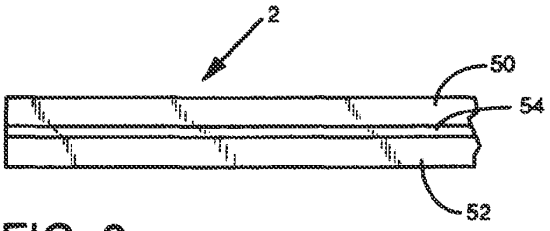

FIG. 2

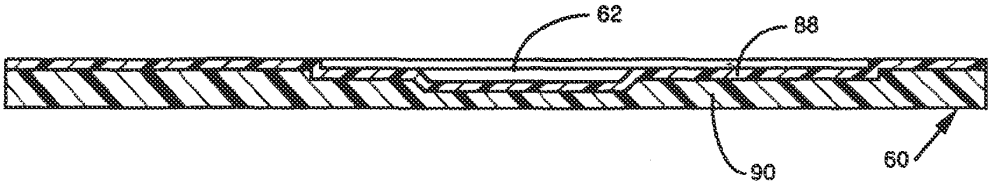

FIG. 4

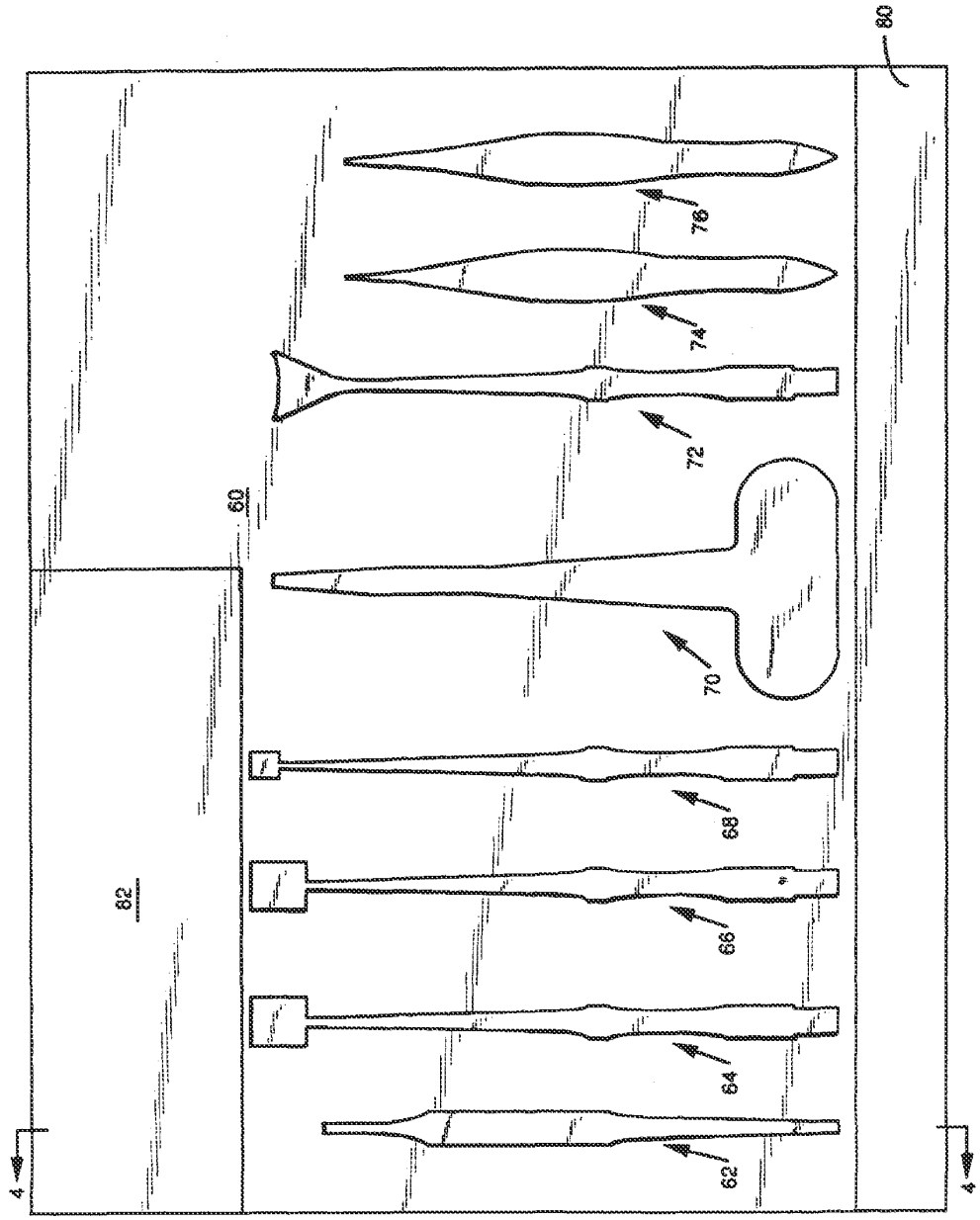

FIG. 3

METHOD OF PERFORMING A SURGICAL PROCEDURE AND ASSOCIATED SURGICAL INSTRUMENT SUPPORT TRAY

This is a continuation of U.S. patent application Ser. No. 08/417,498, filed Apr. 5, 1995, now abandoned, which is a continuation of U.S. patent application Ser. No. 08/166,699, filed Dec. 19, 1993 now abandoned.

BACKGROUND OF THE INVENTION

1. Field of the Invention

The present invention relates to a method of performing a surgical procedure and to an associated surgical instrument support tray and, more specifically, it relates to a system wherein instrument-identifying indicia are provided on a surgical instrument support tray in the general sequence in which the instruments will be employed in a particular surgical procedure.

2. Description of the Prior Art

The medical well-being of mankind has benefited tremendously in this century due to enhanced diagnostic and therapeutic equipment and procedures, improved pharmaceuticals and the enhanced skill of the surgeon.

Tremendous coordination is required in the surgical suite in order to successfully perform a surgical procedure. Not only are sterility and highly efficient coordination among the chief surgeon, assistants, nursing staff and anesthesiologists required to make a surgical procedure successful, but also efforts must be made to do no harm to the patient.

In a typical surgical procedure, a surgeon will employ a large number of hand-held surgical instruments in a specific sequence depending upon both the specific procedure being performed and the preference of the particular surgeon. As there are on the order of hundreds of different surgical instruments in general use, in addition to their being various sizes and other variations within these general categories, it becomes critical that the surgical assistants be able to deliver accurately the specific instrument called for by the surgeon in a rapid and highly reliable manner. Unfortunately, there are situations in the surgical environment wherein either experienced knowledgeable assistants make careless mistakes or assistants who are inadequately skilled are not able to identify by name the particular surgical instrument called for by a surgeon. Such errors can have a substantial detrimental impact upon the surgery.

U.S. Pat. No. 5,059,271 discloses the use of a sheet of silicone rubber with a non-slip surface with the material draped over the patient who is lying in a horizontal position. Surgical instruments are placed on this piece of material which is positioned in relatively close adjacency to the incision. It is stated that even though the surface may be inclined, the non-stick characteristics will resist undesired falling of the surgical instruments off of the sheet.

Despite the foregoing, there remains a need for improved handling of surgical instruments during surgery so as to enhance the likelihood that potentially life saving or life threatening surgical procedures can be performed with a higher degree of efficiency.

SUMMARY OF THE INVENTION

The above-described needs have been met by the present invention. The method of the present invention involves providing an instrument supporting tray having a plurality of surgical instruments positioned thereon. The tray has a plurality of instrument-identifying indicia disposed in a

predetermined relative position corresponding to the general sequence in which they will be employed in the surgical procedure. The surgeon employs the surgical instruments generally in this sequence during performance of the surgical procedure.

The instrument-identifying indicia may be one or more of the following: (a) a graphic representation corresponding in general to the appearance of the instrument, (b) a recess for at least partially receiving the instrument corresponding generally to the shape of the instrument and (c) words and/or numbers identifying the name of the instrument.

In a most preferred embodiment of the invention, the sequence of representation of the instruments by the instrument-identifying indicia will be customized to not only the particular surgical procedure which will be performed, but also to the preference of the specific surgeon who will be performing the surgery.

The surgical tray of the present invention has an instrument-supporting surface and instrument-identifying indicia disposed in a predetermined sequence so as to facilitate presentation of the instruments in the sequence in which the surgeon will be performing the surgery as well as specific identification of the instrument.

The tray of the present invention is preferably flexible such that it can be stored in a rolled or folded condition. It is also preferably sterilizable. The instrument-identifying indicia may be presented as part of a separate element secured to the tray or be imprinted directly on a tray on one or both sides thereof.

It is an object of the present invention to provide a system for enhanced surgical efficiency through presentation on a tray of the surgical instruments to be used in a particular procedure in the general sequence in which they will be employed.

It is a further object of the present invention to provide instrument-identifying indicia on the tray so as to facilitate identification of the particular instrument for delivery of the same to the surgeon and identification of the place on the tray where the instrument is to be returned after use.

It is yet another object of the present invention to provide such a system which facilitates presenting additional equipment information reflecting preferences of the particular surgeon in a readily visible manner.

It is a further object of the present invention to provide, in one embodiment, such a system which is sterilizable and readily reusable.

It is another object of the invention to present additional information on the tray related to the specific surgical procedure.

These and other objects of the invention will be more fully understood from the following description of the invention in reference to the illustrations appended hereto.

BRIEF DESCRIPTION OF THE DRAWINGS

FIG. **1** is a top plan view of a form of tray of the present invention.

FIG. **2** is a partial end elevational view of a tray of the present invention showing the relative relationships of the materials.

FIG. **3** is a top plan view of a modified form of tray of the present invention wherein recesses are provided for the instruments.

FIG. **4** is a cross-sectional illustration of the tray of FIG. **3** taken through **4**—**4** thereof.

DESCRIPTION OF THE PREFERRED EMBODIMENTS

As employed herein, the term "patient" means a member of the animal kingdom, including humans.

As employed herein, the term "surgical procedure" means a procedure performed on a patient by a physician, dentist, veterinarian or other legally authorized health care professional which procedure involves a plurality of hand-held instruments and is at least partially invasive.

As employed herein, "instrument-identifying indicia" means visually perceptible elements which will facilitate identification of a specific surgical instrument or its position on the tray.

FIG. **1** shows a plan view of a tray of the present invention wherein a series of eight instruments will be employed in sequence going from left to right. As used herein the reference to "generally in the sequence" refers to the individual instruments being used by the surgeon in a specific surgical procedure starting from the left and going to the right and shall embrace instances where one or more of these instruments will, during the course of the procedure, be employed more than once. Such repeat usage of the particular instruments will not be deemed to depart from the expression "employed generally" in sequence.

In this embodiment, the tray **2** has instrument-identifying indicia in the form of both graphic planar representations and words. The first instrument **4** is identified by a graphic representation of the instrument and words **6** which identify it as a Beaver blade holder. Similarly, graphic presentation of instruments **8**, **10**, **12**, **14**, **16**, **18** and **20** are presented along with corresponding word identifications **28**, **30**, **32**, **34**, **36**, **38**, **40**.

These instruments have been selected as being the instruments desired to be used by the surgeon in performing a rhinoplasty surgical procedure. By providing the instruments on the tray **2** in this sequence and identifying the instrument both graphically and textually, the efficient presentation of the instruments to the surgeon by the surgical assistant is facilitated along with enhanced facility for returning the instrument to the proper location on the tray after use. As a result, when the procedure is beginning the surgical assistant will, when asked for a Beaver blade holder, provide to the surgeon the instrument positioned over graphic component **4** and adjacent to textual legend. Subsequently, when asked for a self-retaining skin hook (double ball) the instrument positioned over graphic element **8** will be provided. This procedure will be followed throughout the surgery. As the instruments are handed back to the surgical assistant, he or she, if not certain of the identity, can look at the graphic components and text for guidance and position the same over the desired location.

In a preferred embodiment of the invention, the tray will be made of a flexible, sterilizble material which can be stored in a roll or folded without effecting meaningful damage thereto. Referring to FIG. **2**, the tray may be made out of a silicone rubber material having an upper wall **50** and a lower wall **52**. A pocket **54** is defined between walls **50** and **52** and may receive a plastic or paper element imprinted in the manner shown in FIG. **1**. Assuming that the printed element received within pocket **54** faces upwardly, wall **50** should be transparent to facilitate ready reading of the words and viewing of the graphics. If desired, the separate element received within pocket **54** may be printed on both sides and both walls **50**, **52** may be transparent thereby facilitating use of the instrument-identifying indicia in surgical procedures. In lieu of pocket **54**, the separate element bearing the instrument identifying indicia may be secured to the outer surface of wall **50** or wall **52** by any suitable means such as adhesive or tape, or frictional retention. In the alternative, the separate element may be positioned over wall **50** or wall **52** and rest thereon without securement thereto. The separate element may be made of any suitable material, such as paper, paperboard, or plastic, for example.

As the reusable tray must be sterilizable, if the separate element received in pocket **54** cannot withstand such treatment, it will be removed with the tray **2** before sterilization.

An alternative approach would be to print the material shown in FIG. **1** on the outer surface of the tray or print the same and, if desired or required, provide a protective covering thereover subsequently. If desired, printing of a pattern, such as exemplified by FIG. **1**, may be provided on both surfaces of the tray with different surgical procedures represented by each printed surface. The term "printing" as employed herein refers generically to any means of applying a different colored material to the tray so as to create readily visible graphic components or the words or numbers desired.

Referred once again to FIG. **1**, there is shown in the upper left hand corner a further preferred feature of the present invention. While the general concept of the present invention involves positioning instruments sequentially in the order in which they will be employed for a particular surgical procedure adjacent to their respective instrument-identifying indicia, the invention also contemplates, if desired, providing further refinements which are keyed to the preferences of a particular surgeon. For example, the description herein-before has focused upon the example of rhinoplasty. The rhinoplasty tray **2** may be keyed to the instruments which Dr. Vagley prefers to employ in the procedure in his preferred sequence. It also may provide additional information regarding equipment preferences of Dr. Vagley in performing rhinoplasty such as the particular maker of the instruments, glove size, preferred anesthetics, sutures and dressings. The present invention facilitates providing such information as well.

In general, it will be preferred that the tray have a thickness which varies depending upon the material and construction employed. The tray may be of generally rectangular configuration and have outside dimensions no greater than the dimensions of the support surface on which it will be placed. If desired, the tray may be composed of a substantially rigid material.

It will be appreciated from the foregoing that the tray may be fully sterilizable in the portion where the printed indicia, such as paint, ink or different colored material, for example, are applied. The tray may also be fully sterilizable, subject to providing (a) an insert which might bear instrument-identifying indicia and be made of plastic or paper, for example, and positioned in pocket **54**, or (b) a plastic or paper element, for example, bearing instrument-identifying indicia might be positioned on top of another portion of the tray, or (c) the tray may be fully disposable, such as by employing a paper or plastic item, for example, imprinted as shown in FIG. **1**, for example, supported on a rigid support which need not be a portion of the tray, or (d) the tray may have an unsterilized element bearing the instrument-identifying indicia covered by a sterile transparent drape.

One of the advantages of employing the pocket is that the benefit of the instrument-identifying indicia is provided while the non-slip characteristics of the material out of which walls **50** and **52** are made are retained.

Referring to FIG. **3**, a different embodiment of the present invention will be considered. In this embodiment, the tray **60** has a series of upwardly open recesses **62**, **64**, **66**, **68**, **70**, **72**, **74**, **76** each being generally contoured so as to at least partially receive a specific surgical instrument. The recesses **62**–**76** (even numbers only) are so positioned as to provide the surgical instruments generally in the sequence in which they will be employed during the surgical procedure. In this embodiment, if desired, graphic representations of the specific instrument **62**–**76** (even numbers only) may be provided in addition to the recesses either within the recess or adjacent thereto. Also, textual and/or numeric identification (not shown) of the specific instruments are preferably provided within zone **80** with the words and/or numbers underlying the recess for the particular instrument. Information similar to that provided in the upper left corner of FIG. **1** may be provided in zone **82**. As shown in FIG. **4**, the recess **62** is upwardly open and may be formed within a molded element **88** which may form the upper portion of tray **60** which in turn may be received on any suitable underlying support member **90**, such as a plastic or a metal underlying member to which it may be secured as by self-bonding or a suitable adhesive.

It will be appreciated, therefore, that the present invention not only provides for the surgical instruments to be supported on the tray in the sequence in which they will be employed during the surgical procedure, but also employs at least one of (a) graphic representation as in FIG. **1**, (b) textual (or numeric) identification as in FIGS. **1** and **3** and (c) recesses as in FIGS. **3** and **4** to facilitate ready identification of the surgical instrument for purposes of delivery of the proper instrument to the surgeon in an efficient and prompt manner and returning the instrument to the proper location on the tray after use. All of this is accomplished in an economical manner employing trays which may be rigid or flexible which are sterilizable, or disposable, or are covered by a sterile drape and can be employed economically either as reusable elements or sterile, disposable elements.

As a further enhancement, the trays may be imprinted so as to not only provide a desired sequence of use and identification of the respective surgical instruments, but also be further customized to cater to the preference of a specific surgeon during a specific procedure and in such case may also provide additional equipment preferences of the surgeon. All of this is directed toward enhanced efficiency in the surgical suite and more accurate and prompt delivery of the correct instrument to the surgeon and return of the same to the tray after use.

Whereas particular embodiments of the invention have been described herein, for purposes of illustration it will be evident to those skilled in the art that numerous variation of the details may be made without departing from the invention as to find in the appended claims.

I claim:

1. A method of performing a surgical procedure comprising

providing a plurality of surgical instruments, each having an appearance,

providing an instrument supporting tray having said plurality of surgical instruments positioned thereon,

providing said tray with a plurality of instrument identifying indicia disposed in a sequence of predetermined relative positions with the identified surgical instruments positioned adjacent to said instrument identifying indicia respectively related thereto,

performing a surgical procedure employing said surgical instruments generally in the sequence in which said instrument-identifying indicia are present, and

employing a sterilizable flexible tray having a pocket for receipt of said instrument-identifying indicia and a transparent wall whereby said instrument-identifying indicia may be seen from the exterior of said tray.

2. The method of performing a surgical procedure of claim **1**

selecting and positioning said surgical instruments to correspond with the surgical procedure being performed.

3. The method of performing a surgical procedure of claim **2** including

selecting and positioning said surgical instruments according to a specific surgeon's preference.

4. The method of performing a surgical procedure of claim **2** comprising

employing as said instrument-identifying indicia at least one of (a) graphic representations corresponding generally to the appearance of said surgical instrument, (b) words, and (c) numbers.

5. The method of performing a surgical procedure of claim **4** including

establishing said instrument-identifying indicia by printing on said tray.

6. The method of performing a surgical procedure of claim **2** including

employing as said instrument-identifying indicia at least one of (a) recesses in said tray corresponding generally to the appearance of said surgical instrument, (b) words, and (c) numbers.

7. The method of performing a surgical procedure of claim **2** including

employing as said tray a flexible tray which can be rolled or folded for storage.

8. The method of performing a surgical procedure of claim **2** including

employing a sterilizable tray as said tray.

9. The method of performing a surgical procedure of claim **2** including

employing a transparent sterile drape overlying said instrument-identifying indicia.

10. The method of performing a surgical procedure of claim **1** including

employing at least some of said instruments more than once during said surgical procedure.

11. A method of performing a surgical procedure comprising:

providing a plurality of surgical instruments, each having an appearance,

providing an instrument supporting tray having said plurality of surgical instruments positioned thereon,

providing said tray with a plurality of instrument identifying indicia disposed in a sequence of predetermined relative positions with the identified surgical instruments positioned adjacent to said instrument identifying indicia respectively related thereto, and

performing a surgical procedure employing said surgical instruments generally in the sequence in which said instrument-identifying indicia are present;

employing a sterilizable flexible tray, and securing an instrument-identifying indicia bearing element to said tray;

employing said tray having a pocket for receipt of said instrument-identifying indicia bearing element and a transparent wall whereby said instrument-identifying indicia may be seen from the exterior of said tray.

12. The method of performing a surgical procedure of claim **10** including

positioning said tray on a generally rigid support surface during said surgical procedure.

13. The method of performing a surgical procedure of claim **1** comprising

employing said process in a procedure performed on a human being by a surgeon.

14. The method of performing a surgical procedure of claim **13** including

providing on said tray identification of said surgeon and said surgeon non-instrument surgical equipment preferences.

15. The method of performing a surgical procedure of claim **1** including the step of

securing an instrument-identifying indicia bearing element to said tray.

16. A surgical instrument support tray comprising

a surgical instrument supporting surface for supporting a plurality of surgical instruments, said surgical instruments being employable in a sequence in a surgical procedure,

instrument-identifying indicia disposed in predetermined relative position generally corresponding to the sequence in which said surgical instruments will be employed,

wherein each said instrument has an appearance; and

said instrument-identifying indicia includes a visual depiction of said instruments established by a two dimensional graphics and recesses corresponding to the appearance of said instruments.

17. The surgical instrument support tray of claim **16** including

said tray having said instrument-identifying indicia identifying the instruments and relative sequence of use for a particular surgeon in a specific surgical procedure.

18. The surgical instrument support tray of claim **16** including

said tray having additional information regarding said surgeon's specific non-instrument equipment preferences.

19. The surgical instrument support tray of claim **16** including

said tray being sterilizable.

20. The surgical instrument support tray of claim **19** including

said tray being flexible so as to permit rolling or folding for storage without meaningful damage thereto.

21. The surgical instrument support tray of claim **20** including

said instrument-identifying indicia being printed on said tray.

22. The surgical instrument support tray of claim **20** including

said instrument-identifying indicia being printed on a separate element which is secured to said tray.

23. The surgical instrument support tray of claim **16** including

a transparent sterile drape overlying the portion of said tray bearing said instrument-identifying indicia.

24. A surgical instrument support tray comprising:

a surgical instrument supporting surface for supporting a plurality of surgical instruments, said surgical instruments being employable in a sequence in a surgical procedure,

instrument-identifying indicia disposed in predetermined relative position generally corresponding to the sequence in which said surgical instruments will be employed,

said tray being sterilizable,

said tray being flexible so as to permit rolling or folding for storage without meaningful damage thereto,

said instrument-identifying indicia being printed on said tray, and

said tray having a pocket within which said separate element is secured and an adjacent transparent tray wall to permit said instrument-identifying indicia to be viewed.

25. A surgical instrument support tray comprising:

a surgical instrument supporting surface for supporting a plurality of surgical instruments, said surgical instruments being employable in a sequence in a surgical procedure,

instrument-identifying indicia disposed in predetermined relative position generally corresponding to the sequence in which said surgical instruments will be employed,

said tray being sterilizable,

said tray being flexible so as to permit rolling or folding for storage without meaningful damage thereto,

said instrument-identifying indicia being printed on a portion of said tray, and

said tray being printed with instrument-identifying indicia on a separate element which is positioned on another portion of said tray.

26. A surgical instrument support tray comprising:

a surgical instrument supporting surface for supporting a plurality of surgical instruments, said surgical instruments being employable in a sequence in a surgical procedure, and

instrument-identifying indicia disposed in predetermined relative position generally corresponding to the sequence in which said surgical instruments will be employed,

said tray being sterilizable,

said tray being flexible so as to permit rolling or folding for storage without meaningful damage thereto,

said instrument-identifying indicia being printed on a separate element which is secured to said tray,

said separate element being printed with instrument-identifying information on both sides and said tray having two said transparent walls.

* * * * *

EXHIBIT 13

United States Patent [19]

Rauschenberger

[11] **4,160,505**

[45] **Jul. 10, 1979**

[54] **CATHETERIZATION TRAY**

[75] Inventor: **Richard A. Rauschenberger,** Brookfield, Wis.

[73] Assignee: **Will Ross Inc.,** Milwaukee, Wis.

[21] Appl. No.: **862,074**

[22] Filed: **Dec. 19, 1977**

[51] **Int. Cl.**[2] **B65D 85/54**
[52] **U.S. Cl.** **206/571;** 206/564
[58] **Field of Search** 128/348–351; 206/364, 370, 560–565, 570, 571

[56] **References Cited**

U.S. PATENT DOCUMENTS

2,319,556	5/1943	Rhein	206/570 X
3,329,261	7/1967	Serany, Jr. et al.	206/364 X
3,485,352	12/1969	Pilger	206/364
3,601,277	8/1971	Andrews et al.	206/564 X
3,851,649	12/1974	Villari	206/571 X

Primary Examiner—Davis T. Moorhead
Attorney, Agent, or Firm—John A. Dhuey

[57] **ABSTRACT**

A urethral catheterization tray providing a sterile, self-contained catherization package and work area is described.

2 Claims, 3 Drawing Figures

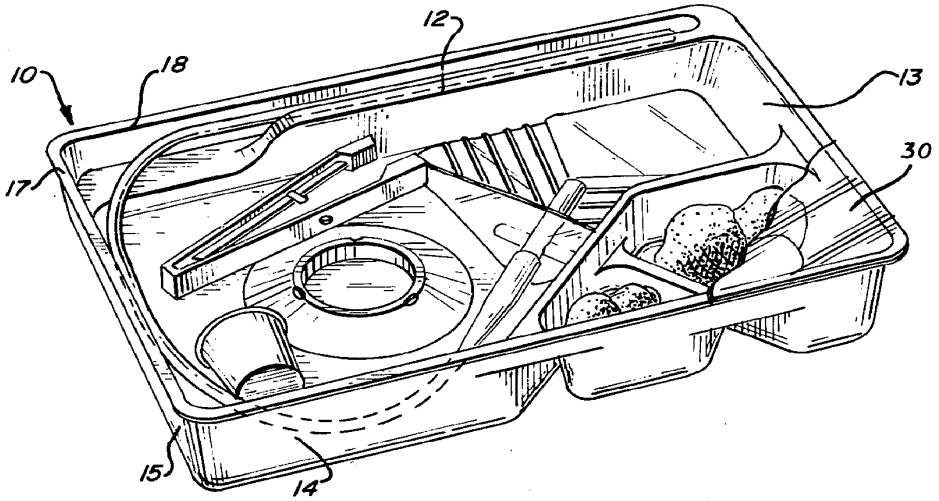

FIG. 1

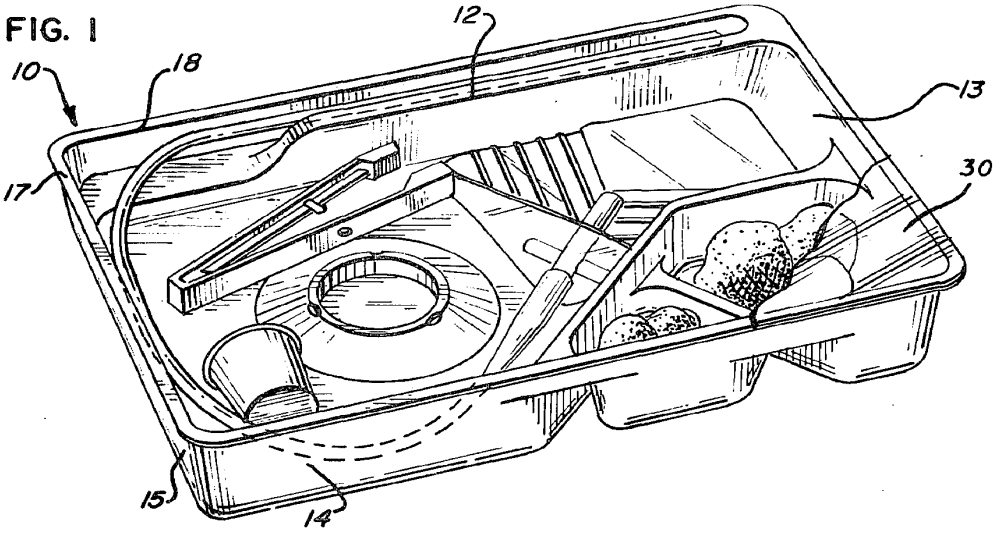

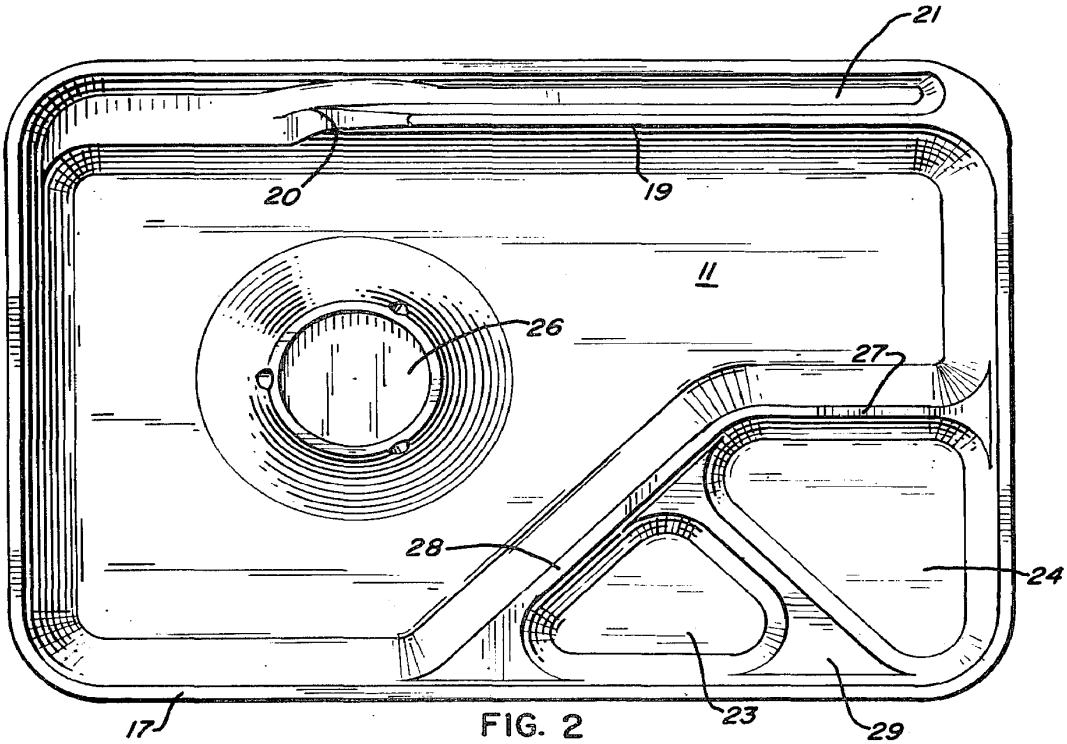

FIG. 2

FIG. 3

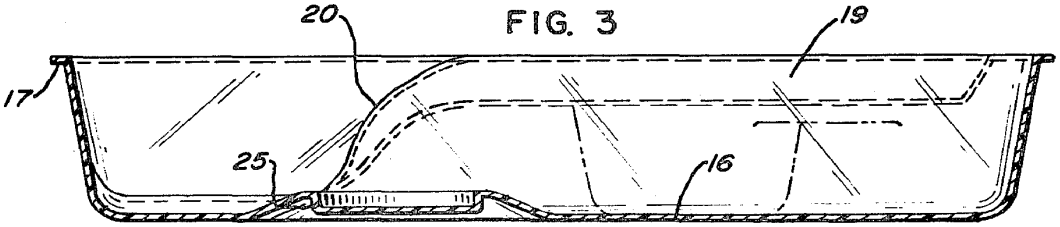

CATHETERIZATION TRAY

This invention is concerned with catheterization trays. More particularly, it is concerned with a sterile, self-contained catheterization package which permits the catheterization procedure to take place within the sterile work area defined by the tray.

Prior art devices have generally employed a tray containing the catheterization implements, i.e. catheter, lubricant, antiseptic, absorbent material such as gauze or cotton, gloves, specimen container, towel and forceps, covered with a sterile folded central supply room (CSR) wrap. In use the CSR wrap is unfolded from the tray to provide a sterile work area about the tray, the area taken up by the extended wrap generally being 1–2 square feet. The attending person then dons the rubber gloves, extracts a lubricant packet from the tray and places an amount of lubricant on the CSR wrap. Next the absorbent pads contained in a cup are removed from the tray by means of the forceps and placed on the wrap. Antiseptic solution then is applied to the pads and the patient is cleansed. Remaining dry absorbent pads then are utilized to dry the patient. The catheter is removed and the insertion end placed into the lubricant on the wrap and inserted into the patient. When catherization is completed, the specimen container is removed from the tray and placed on the wrap. Then a specimen from the bag is allowed to drain onto the container.

It is apparent from the above outlined procedures that less than ideal circumstances are created. For example, the large area taken up by the CSR wrap necessitates a large work area near the patient. Such a substantial area must usually be found on the bed where indavertent movement by the patient could contaminate the sterile work area. During the procedure lubricant jelly, antiseptic solution, and wet absorbent pads are placed on the CSR wrap, where they can be contacted either by the patient or the attending personnel. Furthermore, the chances of spilling urine when attempts are made to fill the specimen container are substantial and soiling of the immediate area is a distinct and unpleasant possibility.

The present invention is intended to eliminate the above-noted deficiencies and is best understood with reference to the following drawings in which:

FIG. 1 is a perspective view of the assembly;

FIG. 2 is a topview of the tray; and

FIG. 3 is a cross-sectional view of the tray.

Tray **10** is formed with a dished portion **11** defined generally by outside walls **12**, **13**, **14**, **15** and **18** and bottom wall **16**. The top edge of walls **12**, **13**, **14**, **15** and **18** are integral with a flange **17** which extends about the periphery of tray **10**. Walls **12** and **18** jointly form one full outside wall on tray **10** and wall **12** is inset from wall **18** and the outer edge of flange **17**. Flange **17** and wall **12** are connected by a channel **21** which has a horizontal section **19** and an inclined section **20** forming a ramp. Wall **12** correspondingly is inclined in the area of secton **20** and cooperates with wall **18** to form the channel **21** in that portion of dish **11**.

Channel **21** is adapted to receive a conventional urethral catheter which is positioned within channel **21** with its insertion end in the horizontal section. The remainder of the catheter extends down the ramp section **20** and around the sides of dish **11**. Channel **21** optionally can be provided with a cross-channel in its horizontal section.

Compartments **23** and **24** are defined within dish **11** by walls **27**, **28** and **29**. Those walls are conveniently formed by directionally varying outside wall **14**. Since the tray **10** usually will be molded as a unit structure, such variations present no problem. Compartments **23** and **24** are independent and adapted to hold absorbent pads separately from each other.

A further compartment in the tray is provided by wall **25** which creates a generally circular compartment **26** in the bottom of dish **11**. Conveniently wall **25** is formed by dropping bottom wall **16** appropriately to provide recess **26**. Again, fabrication is facilitated by the molding operation which permits direct formation of wall **25**.

In its packaged configuration the catheterization implements are placed in tray **10** as shown in FIG. **1** and sealed with a cover sheet **30** about flange **17**. Cover sheet **30** is formed of conventional peelable lid stock such as coated paper or plastic which is permeable to sterilizing gases. The catheter is located in groove **21** and absorbent material is located in compartments **23** and **24**. The remaining componetns generally are arranged sequentially from the top of the tray on down in the order: gloves, lubricant, antiseptic solution, fenestrated drape, forceps, drainage bag and specimen container. For purposes of clarity, not all of the components are shown in the drawings.

In use the attendant places the tray at a convenient location. The seal lid then is removed and discarded. Gloves are donned and a lubricant packet is utilized to put lubricant on the catheter in channel **21**. The catheter then is rotated within channel **21** to spread lubricant about it insertion end. Ramp section **20** supports the catheter during its rotational movement and minimized the danger of the catheter being dislocated from channel **21**. If the optional cross channel has been provided, the attendant's finger may be placed in cross-channel to further hold the catheter within groove **21** and also assist in rotation. It has been found that the most preferred manner is to grasp the catheter near the bottom of ramp **20** and rotate the catheter between the finger and the thumb.

After the catheter has been lubricated, antiseptic solution is applied to the absorbent pads in one, but not both, of the compartments **23** and **24**. Since compartments **23** and **24** are independent, the saturation of one set of absorbent pads does not affect the other set. Then the fenestrated drape is removed from tray **10** and placed over the patient area. Next the patient is cleansed with the saturated absorbent pads by holding with the forceps. The remaining dry pads subsequently are used to dry the patient. Both sets of pads and the tweezers, along with the empty packets are discarded after use. Conveniently, they are placed in the compartments **23** and **24** which are no longer needed. The patient is catheterized and the urine collected in the drainage bag. While the urine is being collected, the specimen container is opened and placed upright in recess **26**, which is sized appropriately to receive and stabilize it. After the urine has been collected, a sample is removed from the bag into the upstanding container. It is noted that any spillage which occurs will be directed into tray **10** and not contaminate the surrounding area.

Although the invention has been described with reference to the drawings, they are presented as illustrations of preferred embodiments of the invention and not meant to limit the invention either in spirit or in scope.

What is claimed is:

1. A catheterization tray providing a sterile, self-contained catheterization package and work area comprising:

a generally rectangular dish having a bottom, four upstanding side walls and a continuous outwardly extending flange integral with the top of said walls,

at least two independent compartments within said dish for separately retaining absorbent material in each compartment;

a wall on the bottom of said dish defining a circular recess for receiving and holding upright a specimen container;

a raised wall section in said dish extending substantially the length of said dish and having a horizontal portion and an inclined portion;

a channel adapted to receive a catheter located in the top of said raised wall and extending substantially the length of said horizontal and inclined portions; and

a releasable cover sheet sealed to said flange, said cover sheet being permeable to sterlizing gases.

2. A catheterization package providing a sterile, self-contained work area comprising:

a generally rectangular dish having a bottom, four upstanding side walls and a continuous outwardly extending flange integral with the top of said walls;

at least two independent compartments within said dish for separately retaining absorbent material in each compartment, said compartments being adjacent to each other and separated by a wall preventing fluid flow therebetween;

a wall on the bottom of said dish defining a circular recess for receiving and holding upright a specimen container;

a raised wall section in said dish extending substantially the length of said dish and having a horizontal portion and an inclined portion;

a channel for receiving a catheter located in the top of said wall and extending substantially the length of said horizontal portion; and

a releasable cover sheet sealed to said flange, said dish containing a catheter at least partialy located within said channel, gloves, lubricant, antiseptic solution, drape, forceps, drainage bag, specimen container adapted to be retained in an upright position in said recess, and absorbent material in each of said independent compartments.

* * * * *

EXHIBIT 14

United States Patent [19]

Beddow

[11] **4,226,328**

[45] **Oct. 7, 1980**

[54] **CATHETERIZATION PACKAGE**

[75] Inventor: **David V. Beddow**, Lake Villa, Ill.

[73] Assignee: **Baxter Travenol Laboratories, Inc.**, Deerfield, Ill.

[21] Appl. No.: **28,516**

[22] Filed: **Apr. 9, 1979**

[51] **Int. Cl.**[3] **B65D 81/24**

[52] **U.S. Cl.** **206/364**; 206/571; 206/514; 206/560; 220/354; 220/408

[58] **Field of Search** 206/363, 364, 365, 366, 206/546, 570, 571, 514, 560; 220/410, 408, 354, 6

[56] **References Cited**

U.S. PATENT DOCUMENTS

797,314	8/1905	Owens	220/408 X
1,279,760	9/1918	Richards, Jr.	206/366
3,485,352	12/1969	Pilger	206/365
3,511,288	5/1970	Sweet et al.	220/355 X
4,014,450	3/1977	Girotti et al.	220/355
4,091,953	5/1978	Daenen	220/355 X
4,124,141	11/1978	Armentrout et al.	220/354 X

FOREIGN PATENT DOCUMENTS

2037597	2/1972	Fed. Rep. of Germany	206/216

Primary Examiner—Joseph Man-Fu Moy
Attorney, Agent, or Firm—Henry W. Collins; Eugene M. Cummings; Paul C. Flattery

[57] **ABSTRACT**

A single-use disposable catheterization package containing the components required for accomplishing a catheterization procedure includes an outer tray and an inner tray. During storage the inner tray is nested within the outer tray and the components required for the catheterization procedure are organized within respective recesses provided on the inner tray. Upon use, the trays are separated and liquid collected as a result of the procedure is received in the outer tray. To prevent spillage, the inner tray is inverted and attached to the outer tray to provide a closed compartment. Rim portions on the inner and outer trays provide a locking leak-resistant engagement between the trays.

2 Claims, 6 Drawing Figures

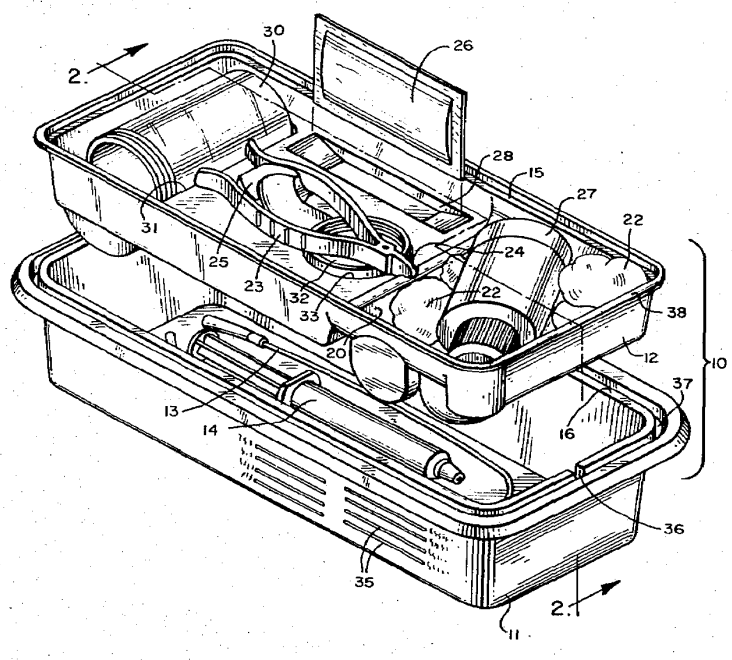

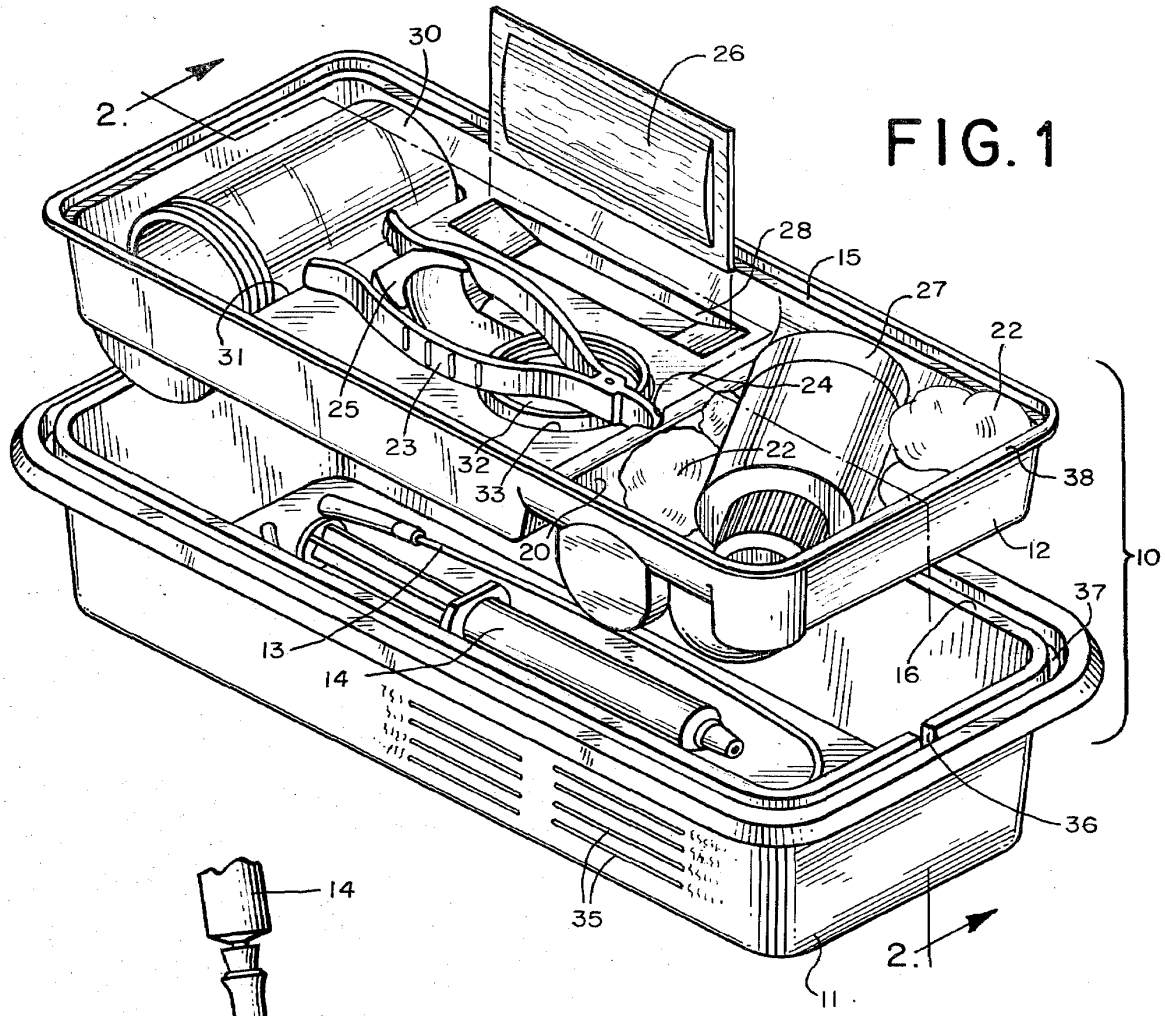
30
26
2.
28
15
27
22
31
24
25
23
32
22
33
38
20
12
10
37
13
14
16
36
35
2.
11

FIG. 1

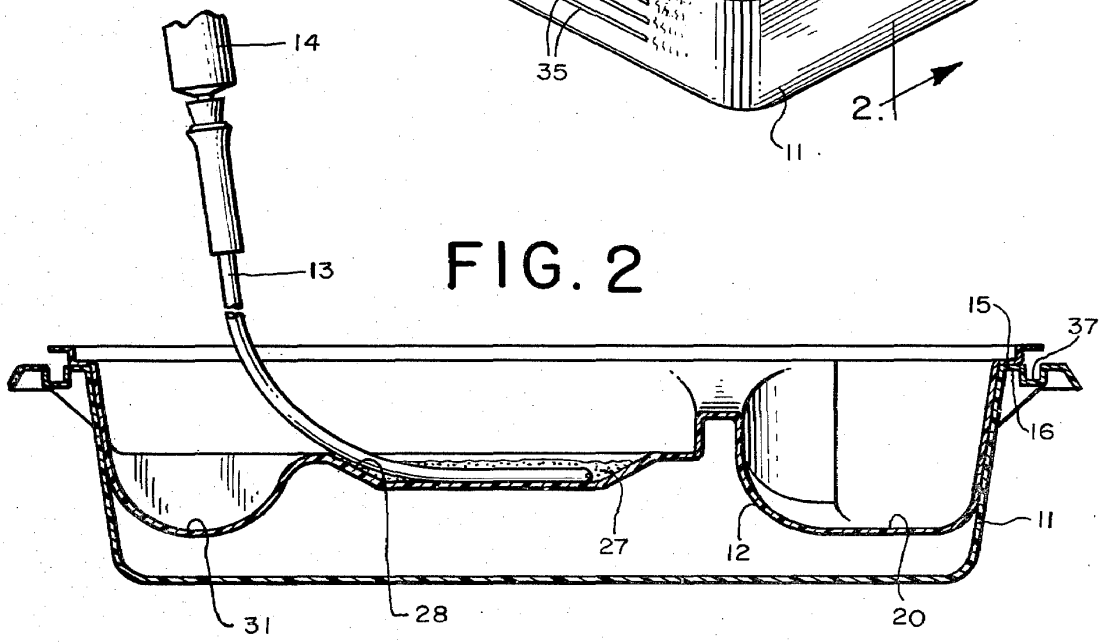
14
13
15
37
16
11
27
12
31
28
20

FIG. 2

FIG. 3

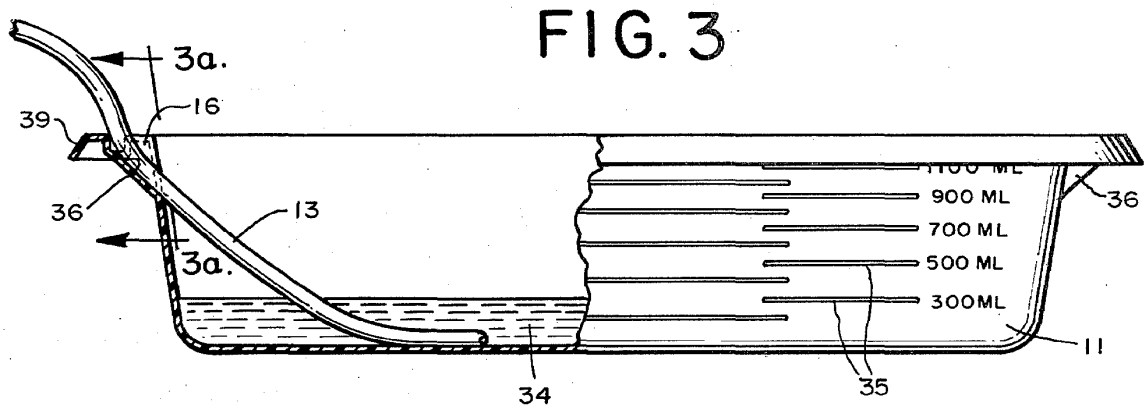

FIG. 3a

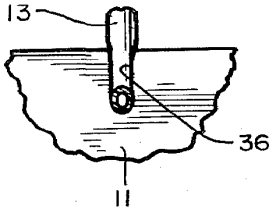

FIG. 4

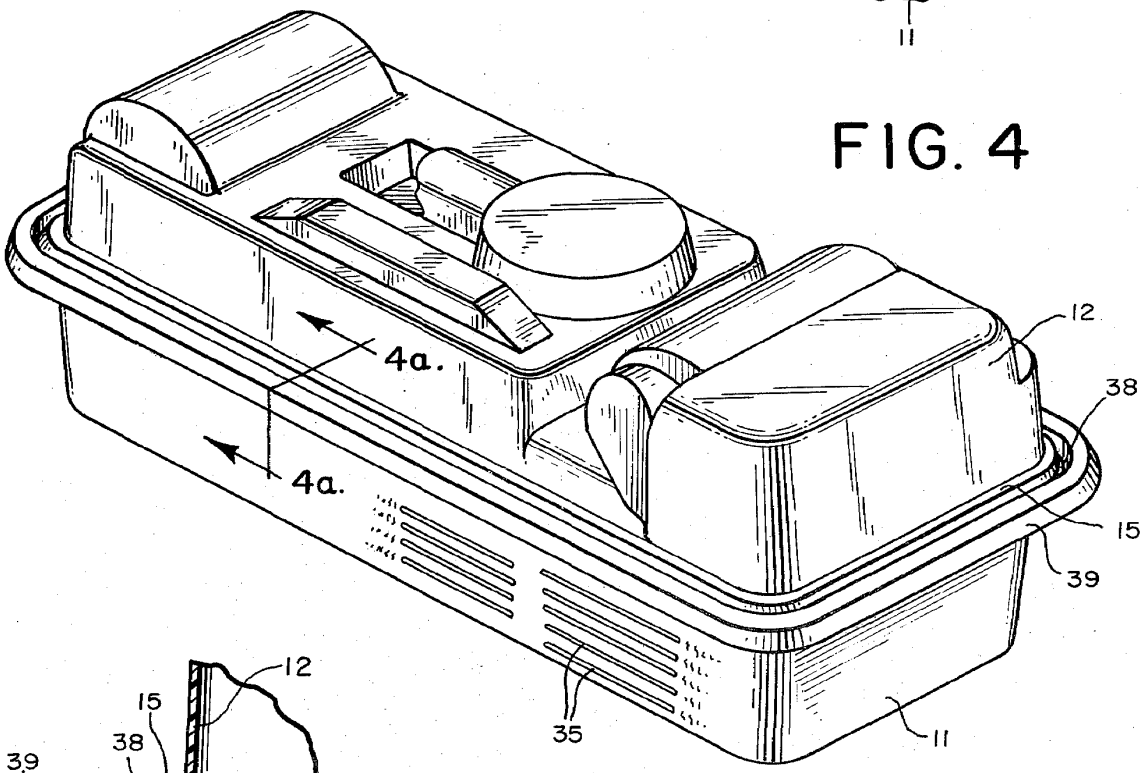

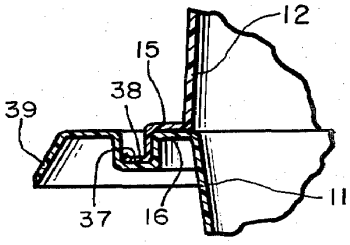

FIG. 4a

CATHETERIZATION PACKAGE

BACKGROUND OF THE INVENTION

This invention relates generally to a catheterization package, and more particularly to a catheterization package which provides a closed container for liquids collected as a result of a catheterization procedure.

Single-use disposable catheterization packages generally consist of a tray in which all of the components necessary for accomplishing a catheterization procedure, including preparation items, catheter and collection bottle, are arranged in their preferred order of use. The tray is sealed in a suitable pouch so that in using the package the physician or nurse is assured that all items necessary for the procedure are present and in a sterile condition. Examples of prior art catheterization packages of this nature are described in U.S. Pat. Nos. 3,978,983, 3,851,649, 3,329,261, 3,166,189, 3,013,656 and 2,346,636.

Ordinarily, in a catheterization procedure it is desired to collect in a closed container a small sample of liquid for analysis, and prior art catheterization packages have typically included a small specimen bottle and cover for this purpose. However, no closed container has been provided in these packages for liquid collected in excess of that required for the sample, and the physician has heretofore been forced to either collect and transport the excess liquid in an open portion of the package housing, or to provide a separate closed container for this purpose.

The present invention is directed to a package construction which obviates this problem by providing a closed leak-resistant collection reservoir for the excess liquid. This is accomplished without adding additional components to the package, and at a reduction in cost compared to the expense of a separate container for this purpose.

Accordingly, it is a general object of the present invention to provide a new and improved catheterization package.

It is a more specific object of the present invention to provide an improved catheterization package which provides for collection of excess liquids in a closed spillresistant container.

SUMMARY OF THE INVENTION

The invention is directed to a catheterization package which includes an outer tray including a circumferential rim portion and an inner tray including a circumferential rim portion dimensioned to engage the rim portion of the outer tray whereby the inner tray is suspended within the outer tray during storage of the package, and a plurality of recesses on the top surface thereof for receiving the components of the catheterization package. To provide a closed leak-resistant container for liquid collected during use of the catheterization package, the rim portion of the inner tray is adapted for locking engagement with the rim portion of the outer tray when the inner tray is inverted and assembled over the outer tray.

BRIEF DESCRIPTION OF THE DRAWINGS

The features of the present invention which are believed to be novel are set forth with particularity in the appended claims. The invention, together with the further objects and advantages thereof, may best be understood by reference to the following description taken in

conjunction with the accompanying drawings, in the several figures of which like reference numerals identify like elements, and in which:

FIG. **1** is a perspective view of a catheterization package constructed in accordance with the invention showing the inner and outer tray portions thereof separated prior to use.

FIG. **2** is a cross-sectional view taken along line **2—2** of FIG. **1** showing the catheter of the catheterization package being lubricated prior to use.

FIG. **3** is a side elevational view of the outer tray portion of the catheterization package partly in cross-section to show the collection of liquid therein.

FIG. **3***a* is an enlarged perspective view of a portion of the bottom tray showing the attachment between the catheter tubing and the outer tray during collection of liquid.

FIG. **4** is a perspective view of the catheterization package showing the inner and outer tray portions thereof assembled following the catheterization procedure to provide a closed reservoir for collected liquid.

FIG. **4***a* is an enlarged cross-sectional view of the interlocking rims of the inner and outer trays when assembled as shown in FIG. **4**.

DESCRIPTION OF THE PREFERRED EMBODIMENT

Referring to the Figures, and particularly to FIG. **1**, a catheterization package **10** constructed in accordance with the invention is seen to include a generally rectangular box-like outer tray **11** having an open top within which a generally rectangular inner tray **12** is suspended. Prior to use, the assembled inner and outer trays are preferably enclosed within an appropriately dimensioned pouch (not shown), which is sealed to maintain the sterility of the components within the catheterization package. The pouch may be formed of a transparent and flexible plastic film and an appropriate wrapping may be provided between the assembled trays and the pouch. The various foldable materials required for the catheterization procedure, including a water proof underpad (not shown), a pair of pre-powdered gloves (not shown), and protective drape (not shown) may be arranged in a flat condition between the wrap and the trays.

Prior to use, the plastic pouch is opened and the wrap, underpad, plastic gloves and drape are removed, unfolded and placed in position on the patient in a manner well known to the art. Inner tray **12** is then lifted from outer tray **11**, as shown in FIG. **1**, exposing the catheter **13** and syringe **14** for use. As best shown in FIG. **2**, the inner tray **12** includes a flat horizontal rim portion **15** which engages a similarly dimensioned horizontal rim portion **16** on outer tray **11**. The base and tray portions may be thermoformed by conventional methods from a thin plastic material.

Inner tray **12** is formed with a plurality of compartments or recesses which accommodate the various components required by the catheterization procedure. A first recess **20** is provided to accommodate a bottle **21** of cleansing solution, and to hold the bottle in place the recess may include an appropriately dimensioned section at one end for receiving the neck and cap of the bottle, and an appropriately dimensioned section at its other end to receive the bottom end of the bottle. Recess **20** may include a central section which is wider than bottle **21** to facilitate access to the bottle, and to

provide an area for storing balls of cleansing material 22, which are used in preparing the patient for catheterization. Prior to use the balls of cleansing material are saturated with cleansing solution by removing bottle 21 from compartment 20, and pouring the contents of the bottle over the balls of cleansing material while the balls are in their stored position in recess 20. After saturization, the balls are handled by a forceps 23 which is securely stored in tray 12 by means of a notch 24 and abutment 25 provided on the tray surface.

To provide for lubrication of the catheter, the catheterization package 10 includes an individually sealed foil container 26 of lubricating jelly 27 packed within an elongated rectangular recess 28. In use, this container is removed from recess 27 and torn open, and the lubricating jelly contained therein is deposited in the recess. Catheter 13 and syringe 14 are now removed from outer tray 11 and prepared for use. After the patient has been prepared, the catheter is lubricated with the lubricating jelly 27 by positioning the catheter tip in the jelly-filled recess 28, as shown in FIG. 2, and the catheterization procedure is carried out in a conventional manner.

A sample of liquid collected as a result of the catheterization procedure may be collected in a specimen bottle 30 (FIG. 1) which is contained in a recess 31 in the inner tray. A cap 32, which is in a recess 33 in the inner tray, is utilized to close the specimen bottle.

As shown in FIG. 3, after the desired specimen has been collected in specimen bottle 30, the excess collected liquid 34 is collected in outer tray 11. A plurality of volume-indicating marks 35 may be provided in embossed or printed form on one or more side walls of the outer tray to indicate the volume of liquid collected. Although marks reading from 300 milliliters to 1100 milliliters are shown in the preferred embodiment, it will be appreciated that other volumetric indications may be provided to accommodate various sizes of outer trays and units of volume.

The rim of outer tray 11 may be provided with one or more channels 36 to secure the end of catheter 13 during collection of fluid in the tray. As seen in FIG. 3, these channels extend between the rim and sidewall portions of tray 11, and, as such provide an angled walled bridge element which firmly grips the catheter tubing and adds to the rigidity of the tray. As best seen in FIG. 3*a*, the walls of the channel are preferably spaced to slightly compress the catheter tubing so as to prevent the tubing from being inadvertently pulled loose during collection of liquid 34.

After the excess liquid has been collected in outer tray 11, the outer tray may be conveniently closed by inverting inner tray 12 and securing the two trays together as shown in FIG. 4. The result is an enclosed container for the collected liquid 34 which may be transported for storage or disposal without risk of the liquid being spilled. As illustrated in FIG. 4*a*, a leak-resistant interlocking fit is obtained between the two trays by providing a circumferential channel 37 on the rim portion of tray 11 within which a circumferential lip portion 38 provided on the rim portion of tray 12 is received. In practice, the channel and lip portions are dimensioned to obtain an engagement which is sufficiently tight to resist leakage and prevent inadvertent separation, but not so tight as to present difficulty to the physician or nurse in assembling or disassembling the trays.

To provide a smooth edge for handling purposes, a rounded circumferential flange portion 39 is provided on tray 11 external to channel 37. This flange portion is angled downwardly with respect to the top surface of the tray, and as shown in FIG. 4*a*, is cut at an angle in a vertical plane such that an edge free of potentially abrasive corners is obtained. The resulting rim construction adds additional rigidity to tray 11 and provides convenient handle means for carrying the tray.

Thus, a sterile one-use catheterization package has been described which includes all of the components necessary to carry out a catheterization procedure. An inner tray portion of this package stores the components so as to provide protection against damage during shipment and to render the components readily available when called for by the procedure. An outer tray portion provides a similar storage function for the catheter and syringe, and doubles as a closed spill-resistant container for liquid collected as a result of the procedure. The inner and outer trays may be conveniently and economically formed by conventional thermoforming techniques of thin molded plastic, the various recesses provided therein serving to enhance the overall structural strength of the trays.

While a particular embodiment of the invention has been shown and described, it will be obvious to those skilled in the art that changes and modifications may be made without departing from the invention in its broader aspects, and, therefore, the aim in the appended claims is to cover all such changes and modifications as fall within the true spirit and scope of the invention.

I claim:

1. A disposable catheterization package of the type containing components for a catheterization procedure, comprising:

an outer tray including side walls and a circumferential rim portion;

an inner tray including a circumferential rim portion dimensioned to engage said outer tray rim portion whereby said inner tray is nestingly suspended within said outer tray during storage of said package, said inner tray including a plurality of recesses on the surface thereof for receiving at least a portion of the components contained in the package;

said outer tray rim portion including a channel and inner and outer generally flat horizontal flange portions on either side of said channel;

said inner tray rim portion including a flat horizontal flange portion and a lip portion upstanding therefrom;

said inner flange portion of said outer tray rim and said flange portion of said inner tray rim being disposed for engaging in an abutting relationship when said inner tray is nested within said outer tray;

a notch-like recess along said inner flange portion of said outer tray rim for receiving in supporting relationship a portion of a catheter used in the catheterization procedure;

said lip portion of said inner tray rim being receivable within said channel of said outer tray rim when said inner tray is inverted, to provide a closed spill-resistant container between said tray portions for liquid collected during the catheterization procedure.

2. A disposable catheterization package in accordance with claim 1 wherein the edge of said outer flange portion of said outer tray rim is downturned.

* * * * *

EXHIBIT 17

US009745088B2

(12) **United States Patent**
Tomes et al.

(10) **Patent No.: US 9,745,088 B2**
(45) **Date of Patent: *Aug. 29, 2017**

(54) **CATHETER TRAY, PACKAGING SYSTEM, INSTRUCTION INSERT, AND ASSOCIATED METHODS**

(71) Applicant: **Medline Industries, Inc.**, Mundelein, IL (US)

(72) Inventors: **Jennifer E. Tomes**, Mundelein, IL (US); **Sarah Dickinson**, Chicago, IL (US); **Deborah Adler**, New York, NY (US); **Jack Maze**, Long Grove, IL (US); **Alberto Savage**, Buffalo Grove, IL (US); **Kenneth Chua**, Glenview, IL (US); **Earl Wilson**, Ingleside, IL (US); **John Kutsch**, Harvard, IL (US)

(73) Assignee: **Medline Industries, Inc.**, Northfield, IL (US)

(*) Notice: Subject to any disclaimer, the term of this patent is extended or adjusted under 35 U.S.C. 154(b) by 234 days.

This patent is subject to a terminal disclaimer.

(21) Appl. No.: **14/793,455**

(22) Filed: **Jul. 7, 2015**

(65) **Prior Publication Data**

US 2015/0335855 A1 Nov. 26, 2015

Related U.S. Application Data

(60) Continuation of application No. 13/860,902, filed on Apr. 11, 2013, now Pat. No. 9,522,753, which is a

(Continued)

(51) **Int. Cl.**
A61M 25/00 (2006.01)
B65B 11/00 (2006.01)

(Continued)

(52) **U.S. Cl.**
CPC ***B65B 11/00*** (2013.01); ***A61B 50/30*** (2016.02); ***A61B 50/33*** (2016.02); ***A61M 25/00*** (2013.01);

(Continued)

(58) **Field of Classification Search**
CPC A61B 2050/3008; A61B 2050/3015; A61B 42/00; A61B 46/00; A61B 50/30;

(Continued)

(56) **References Cited**

U.S. PATENT DOCUMENTS

2,659,485 A 11/1953 Duley et al.
2,715,296 A 8/1955 Petit

(Continued)

FOREIGN PATENT DOCUMENTS

CN 201823147 5/2011
JP 2007-229520 9/2007

(Continued)

OTHER PUBLICATIONS

Medline Industries, Inc. vs *C.R. Bard, Inc*; No. 14-cv-3618; Memorandum in Support of C.R. Bard's Motion for Leave to File Second Amended Answer to Add Counterclaim; Filed Sep. 25, 2015.

(Continued)

Primary Examiner — Adam Marcetich
(74) *Attorney, Agent, or Firm* — Philip H. Burrus, IV

(57) **ABSTRACT**

A tray (**100**) for accommodating a coiled medical device, such as a catheter assembly (**700**), includes a first compartment (**101**), a second compartment (**102**), and a third compartment (**103**). The catheter assembly (**700**) and devices associated with a catheterization procedure, such as syringes (**701**,**702**) containing sterile water and lubricating jelly and a specimen container (**703**) can be disposed within the tray. Printed instructions (**1001**) can be included with the tray (**100**). One or more layers of wrap material (**2200**) can be

(Continued)

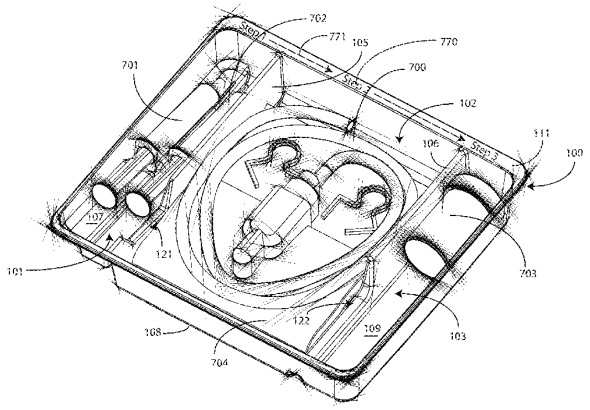

folded about the tray (**100**) to enclose the tray (**100**) and other items, such as an additional layer of wrap material (**2701**), packaged liquid hand sanitizer (**2401**), and packaged gloves (**2402**). When a health care services provider (**3101**) unfolds the wrap material, the same can be used to create a sterile field beneath a patient (**3201**).

92 Claims, 35 Drawing Sheets

Related U.S. Application Data

division of application No. 13/155,026, filed on Jun. 7, 2011, now Pat. No. 8,448,786, which is a continuation-in-part of application No. 12/495,148, filed on Jun. 30, 2009, now Pat. No. 8,631,935, and a continuation-in-part of application No. 12/647,515, filed on Dec. 27, 2009, and a continuation-in-part of application No. 13/153,265, filed on Jun. 3, 2011, and a continuation-in-part of application No. 13/153,300, filed on Jun. 3, 2011, now abandoned.

(60) Provisional application No. 61/352,140, filed on Jun. 7, 2010, provisional application No. 61/352,155, filed on Jun. 7, 2010, provisional application No. 61/428,944, filed on Dec. 31, 2010, provisional application No. 61/437,796, filed on Jan. 31, 2011.

(51) **Int. Cl.**

A61B 50/33	(2016.01)
A61M 5/00	(2006.01)
A61B 50/30	(2016.01)
A61B 42/00	(2016.01)
A61B 46/00	(2016.01)

(52) **U.S. Cl.**

CPC ***A61M 25/002*** (2013.01); *A61B 42/00* (2016.02); *A61B 46/00* (2016.02); *A61B 2050/3008* (2016.02); *A61B 2050/3015* (2016.02); *A61J 2205/40* (2013.01); *A61J 2205/50* (2013.01); *A61L 2202/18* (2013.01); *A61L 2202/182* (2013.01); *A61M 5/002* (2013.01); *A61M 25/0017* (2013.01); *A61M 2209/06* (2013.01)

(58) **Field of Classification Search**

CPC ... A61B 50/33; A61M 2209/06; A61M 25/00; A61M 25/0017; A61M 25/002; A61M 5/002; A61M 5/003; A61M 2205/6081; B65B 11/00; A61L 2202/18; A61L 2202/182; B65D 1/36; A61J 2205/20; A61J 2205/40; A61J 2205/50

See application file for complete search history.

(56) **References Cited**

U.S. PATENT DOCUMENTS

2,781,611	A		2/1957	West	
2,886,316	A		5/1959	Ayala	
2,947,415	A		8/1960	Garth	
2,954,642	A		10/1960	Roderick	
2,959,891	A		11/1960	Barnett et al.	
3,107,786	A		10/1963	Adelman	
3,166,189	A		1/1965	Disston	
3,315,802	A		4/1967	Maro	
3,329,261	A		7/1967	Serany, Jr. et al.	
3,379,339	A		4/1968	Asenbauer	
3,485,352	A		12/1969	Pilger	
D218,077	S		7/1970	Gabriel	
3,542,019	A		11/1970	Gittins	
3,726,281	A		4/1973	Norton	
3,851,649	A	*	12/1974	Villari	A61M 25/002 206/223
D234,404	S		2/1975	Merril	
D237,315	S		10/1975	Nowkowski	
D237,317	S		10/1975	Nowkowski	
3,976,195	A		8/1976	Cohen	
3,978,983	A		9/1976	Brezetta	
D242,654	S		12/1976	Rawls	
3,998,221	A		12/1976	Collins	
D243,798	S		3/1977	Swartz	
4,011,944	A		3/1977	Cooley	
4,053,280	A		10/1977	Salisbury	
4,075,782	A		2/1978	Neuschatz	
D248,871	S		8/1978	Forsman et al.	
D249,362	S		9/1978	Forsman et al.	
4,160,505	A		7/1979	Rauschenberger	
4,170,300	A		10/1979	Pick	
4,226,328	A		10/1980	Beddow	
4,266,669	A		5/1981	Watson	
4,282,678	A		8/1981	Tsui	
4,307,539	A		12/1981	Klein	
D262,995	S		2/1982	Gaba et al.	
D268,130	S		3/1983	Easton	
4,458,705	A		7/1984	Cawood	
D275,886	S		10/1984	Sheward et al.	
D276,462	S		11/1984	Villarreal	
D277,508	S		2/1985	Clair	
4,523,679	A	*	6/1985	Paikoff	A61L 2/04 206/363
4,530,349	A		7/1985	Metzger	
D280,663	S		9/1985	Albon et al.	
D280,933	S		10/1985	McLaughlin	
D280,993	S		10/1985	Mariol	
D283,051	S		3/1986	Fichera	
D287,760	S		1/1987	Discko, Jr.	
4,761,008	A		8/1988	Huggins	
4,767,008	A	*	8/1988	Warnecke	A61M 5/003 206/366
4,828,113	A	*	5/1989	Friedland	A61C 3/005 206/369
D310,896	S		9/1990	Winjum	
4,991,877	A		2/1991	Lieberman	
5,007,535	A	*	4/1991	Meseke	A61M 5/008 206/363
5,024,326	A		6/1991	Sandel et al.	
5,031,768	A		7/1991	Fischer	
5,094,621	A		3/1992	Friedel	
5,163,557	A		11/1992	Sokolowski	
5,170,804	A		12/1992	Glassman	
5,197,885	A		3/1993	Friedel	
D334,973	S		4/1993	Valentine et al.	
D337,830	S		7/1993	Coyne et al.	
5,232,369	A		8/1993	Mavrikis	
5,244,394	A		9/1993	Serabian-Musto	
D343,687	S		1/1994	Houghton et al.	
5,312,287	A		5/1994	Chuang	
5,314,339	A		5/1994	Aponte	
5,318,543	A		6/1994	Ross et al.	
5,324,201	A		6/1994	Friedel	
5,339,955	A		8/1994	Horan et al.	
D351,661	S		10/1994	Fischer	
5,392,918	A		2/1995	Harrison	
5,411,437	A		5/1995	Weber et al.	
5,487,566	A		1/1996	Hedge, Jr.	
D380,272	S		6/1997	Partika et al.	
5,665,945	A		9/1997	Oshima	
D387,177	S		12/1997	Davis	
D387,559	S		12/1997	Williamson	
5,713,778	A		2/1998	Rodeosevich et al.	
5,720,502	A		2/1998	Cain	
5,778,574	A		7/1998	Reuben	
5,779,053	A		7/1998	Partika	
5,795,213	A		8/1998	Goodwin	
5,820,441	A		10/1998	Pracas	
5,827,262	A		10/1998	Neftel et al.	
5,829,790	A		11/1998	Phillips	
5,872,262	A		2/1999	Dolle, III et al.	

(56) **References Cited**

U.S. PATENT DOCUMENTS

5,941,241	A *	8/1999	Weinstein	A61F 17/00 128/200.14
5,947,284	A	9/1999	Foster	
5,954,369	A	9/1999	Seabrook	
5,975,295	A	11/1999	Diamond	
6,004,136	A	12/1999	Ehrenpreis	
6,012,586	A	1/2000	Misra	
6,068,121	A	5/2000	McGlinch	
6,089,943	A	7/2000	Lo	
6,142,152	A	11/2000	Gawarecki	
6,158,437	A *	12/2000	Vagley	A61C 19/02 128/898
6,159,017	A	12/2000	Coomansingh	
D442,697	S	5/2001	Hajianpour	
D450,130	S	11/2001	Goldstein	
D450,391	S	11/2001	Hunt et al.	
6,330,427	B1	12/2001	Tabachnik	
6,361,396	B1	3/2002	Snyder et al.	
6,382,212	B1	5/2002	Borchard	
6,405,863	B1	6/2002	Dhindsa	
6,454,097	B1 *	9/2002	Blanco	A45C 3/02 206/459.5
6,579,271	B1	6/2003	Aruffo et al.	
6,659,506	B1	12/2003	Erisalu	
6,681,933	B1	1/2004	Demsien et al.	
6,769,546	B2	8/2004	Busch	
D495,491	S	9/2004	Ramirez	
6,793,078	B2	9/2004	Roshdy	
6,840,379	B2	1/2005	Franks-Farah et al.	
6,896,141	B2	5/2005	McMichael et al.	
6,915,901	B2	7/2005	Feinberg	
6,926,708	B1	8/2005	Franks-Farah et al.	
6,948,742	B2	9/2005	Buck	
7,048,120	B2	5/2006	Pond	
7,066,328	B2	6/2006	Pulsifer	
D530,920	S	10/2006	Snell	
D547,064	S	7/2007	Snell	
D549,454	S	8/2007	Åhman	
7,264,869	B2	9/2007	Tobita	
7,278,987	B2	10/2007	Solazzo	
D557,047	S	12/2007	Dretzka	
D561,473	S	2/2008	Phillips et al.	
D563,673	S	3/2008	Dretzka	
7,401,703	B2	7/2008	McMichael	
D579,662	S	11/2008	Dretzka	
D590,596	S	4/2009	Dretzka	
D596,311	S	7/2009	Antons	
7,624,869	B2	12/2009	Primer	
D609,819	S	2/2010	Tomes et al.	
D612,153	S	3/2010	Liao	
7,785,312	B2	8/2010	Thorne	
D638,137	S	5/2011	Gross et al.	
D662,218	S	6/2012	Pittman	
8,448,786	B2	5/2013	Tomes et al.	
D688,461	S	8/2013	Ambrefe et al.	
8,628,549	B2	1/2014	To et al.	
8,631,935	B2	1/2014	Tomes et al.	
8,678,190	B2	3/2014	Tomes et al.	
D708,347	S	7/2014	Lober	
D708,759	S	7/2014	Heyman et al.	
D720,470	S	12/2014	Lober	
D720,471	S	12/2014	Angel et al.	
9,283,352	B2	3/2016	Tomes et al.	
9,522,753	B2 *	12/2016	Tomes	A61M 25/00
2002/0185406	A1	12/2002	Massengale	
2003/0031995	A1	2/2003	Laura	
2003/0038475	A1	2/2003	Stancil	
2003/0075474	A1	4/2003	Moyer et al.	
2003/0159969	A1	8/2003	McMichael et al.	
2004/0004019	A1	1/2004	Busch	
2004/0161732	A1	8/2004	Stump	
2004/0195145	A1	10/2004	Roshdy	
2004/0238391	A1	12/2004	Pond	
2005/0022822	A1	2/2005	Santilli	
2005/0101905	A1	5/2005	Merry	
2005/0228691	A1	10/2005	Paparo	
2005/0256453	A1 *	11/2005	Nagamatsu	A61M 5/008 604/97.02
2005/0285385	A1	12/2005	Bova	
2006/0009742	A1	1/2006	Solazzo	
2006/0029912	A1	2/2006	Kearby et al.	
2006/0088355	A1	4/2006	Ribi	
2006/0186010	A1	8/2006	Warnack	
2006/0264822	A1	11/2006	Nagamatsu	
2006/0271019	A1	11/2006	Stoller et al.	
2007/0026472	A1	2/2007	Prokash et al.	
2007/0060908	A1	3/2007	Webster et al.	
2007/0065792	A1	3/2007	Schubarth	
2007/0084742	A1	4/2007	Miller et al.	
2007/0088330	A1	4/2007	House	
2007/0095699	A1	5/2007	Frieze	
2007/0142786	A1 *	6/2007	Lampropoulos	A61M 5/008 604/189
2007/0161971	A1	7/2007	House	
2007/0225687	A1 *	9/2007	House	A61M 25/0111 604/544
2007/0299431	A1	12/2007	Jakubowski et al.	
2008/0116106	A1	5/2008	Lampropoulos et al.	
2008/0121553	A1	5/2008	Gobel	
2008/0221515	A1 *	9/2008	Nagamatsu	A61M 5/008 604/97.02
2008/0283426	A1	11/2008	Primer et al.	
2008/0283433	A1	11/2008	Primer	
2009/0071854	A1 *	3/2009	Martin	G06Q 10/087 206/373
2009/0152160	A1	6/2009	Thompson et al.	
2009/0184026	A1	7/2009	Massengale et al.	
2009/0234346	A1	9/2009	McBride et al.	
2009/0236259	A1	9/2009	Hicks	
2010/0274205	A1	10/2010	Morelli et al.	
2010/0307942	A1	12/2010	Tomes et al.	
2010/0311026	A1	12/2010	Tomes et al.	
2011/0107494	A1 *	5/2011	Haines	A61B 5/411 2/48
2011/0155599	A1	6/2011	Yakel et al.	
2011/0297147	A1	12/2011	Lick et al.	

FOREIGN PATENT DOCUMENTS

WO	WO-2005/027767	3/2005
WO	WO-2006/114466	11/2006
WO	WO-2007/045943	4/2007

OTHER PUBLICATIONS

Medline Industries, Inc. vs *C.R. Bard, Inc*; No. 1:14-cv-03618; Defendant C.R. Bards, Inc's Second Amended Answer to Second Amended Complaint; Filed Sep. 25, 2015.

Poon, Robert "Non-Final Office Action", U.S. Appl. No. 12/495,148, filed Jun. 30, 2009; first inventor: Jennifer E. Tomes; dated Aug. 4, 2010.

Yuan, Minqiang "Non-Final Office Action", Chinese Application No. 200920267201.2, dated Sep. 9, 2010.

European Patent Office, "Extended EPO Search Report", EPO Application No. 10251025.2, In the Name of Medline Industries, dated Sep. 29, 2010.

Medline, "Medline Aritcle/Brochure", Published 2008.

Yuan, Minquiang "Non-Final Office Action", Chinese Application No. 200920267201.2, dated Jun. 4, 2010.

European Patent Office, "Extended EPO Search Report", Application No. 10251024.5, In the Name of Medline Industries, dated Oct. 18, 2010.

Examiner, Chinese Patent Office "First Office Action", CN Application No. 201020219785.9; dated Nov. 18, 2010; dated Jun. 3, 2010.

Poon, Robert "Final Office Action", U.S. Appl. No. 12/495,148, filed Jun. 30, 2009, dated Mar. 3, 2011.

Prange, Sharon M., "Response to First Office Action", U.S. Appl. No. 12/004,796, filed Dec. 21, 2007; dated Oct. 28, 2009.

Cavanna, Mark "Notice of Allowance", U.S. Appl. No. 29/362,279, filed May 21, 2010, dated Sep. 19, 2011.

(56) **References Cited**

OTHER PUBLICATIONS

Poon, Robert "NonFinal Office Action", U.S. Appl. No. 12/846,675, filed Jul. 29, 2010; dated Dec. 22, 2011.
Cavanna, Mark "Notice of Allowance", U.S. Appl. No. 29/338,022, filed Jun. 3, 2009; dated Oct. 1, 2009.
Cavanna, Mark "NonFinal Office Action", U.S. Appl. No. 29/380,474, filed Dec. 26, 2012; dated Mar. 27, 2012.
Poon, Robert "NonFinal Office Action", U.S. Appl. No. 12/647,515, filed Dec. 27, 2009; dated Jun. 28, 2012.
Cavanna, Mark "Ex Parte Quayle Action", U.S. Appl. No. 29/380,474, filed Dec. 6, 2010; dated Aug. 14, 2012.
Poon, Robert "Restriction Requirement", U.S. Appl. No. 12/647,515, filed Dec. 27, 2009; dated May 23, 2012.
Byun, Sung C., "PCT Search Report", PCT/US2011/068193, filed Dec. 30, 2011; dated Aug. 22, 2012.
Poon, Robert "Final Office Action", U.S. Appl. No. 12/846,675, filed Jul. 29, 2010; dated Sep. 26, 2012.
Poon, Robert "NonFinal Office Action", U.S. Appl. No. 13/374,509, filed Dec. 30, 2011; dated Oct. 2, 2012.
Poon, Robert "NonFinal Office Action", U.S. Appl. No. 13/153,300, filed Jun. 3, 2011; dated Oct. 1, 2012.
Poon, Robert "NonFinal OA", U.S. Appl. No. 12/495,148, filed Jun. 30, 2009; dated Oct. 4, 2012.
Byun, Sung C., "PCT Search Report", PCT/US2012/039311; Filed May 24, 2011; dated Oct. 25, 2012.
Hand, Melanie J., "NonFinal OA", U.S. Appl. No. 13/155,026, filed Jun. 7, 2011; dated Nov. 30, 2012.
Byun, Sung Cheal "PCT Search Report and Written Opinion", PCT/US2012/037524; Filed May 11, 2012; dated Nov. 16, 2012.
"EPO Intent to Grant", EPO Application No. 10251024.5; Filed Jun. 2, 2010; dated Nov. 2, 2012.
Hand, Melanie J., "NonFinal OA", U.S. Appl. No. 12/785,064, filed May 21, 2010; dated Feb. 1, 2013.
Pass, Natalie "NonFinal OA", U.S. Appl. No. 13/153,265, filed Jun. 3, 2011; dated Mar. 5, 2013.
Hand, Melanie J., "Notice of Allowance", U.S. Appl. No. 13/155,026, filed Jun. 7, 2011; dated Feb. 1, 2013.
Hand, Melanie J., "NonFinal OA", U.S. Appl. No. 13/115,053, filed Jun. 7, 2011; dated May 9, 2013.
Poon, Robert "Final OA", U.S. Appl. No. 12/647,515, filed Dec. 27, 2009; dated May 13, 2013.
Hand, Melanie J., "Final OA", U.S. Appl. No. 12/785,064, filed May 21, 2010; dated Jun. 5, 2013.
Pass, Natalie "Final OA", U.S. Appl. No. 13/153,265, filed Jun. 3, 2011; dated Jul. 12, 2013.
Poon, Robert "Final Office Action", U.S. Appl. No. 12/495,148, filed Jun. 30, 2009; dated Jul. 31, 2013.
Poon, Robert "Final OA", U.S. Appl. No. 13/374,509, filed Dec. 30, 2011; dated Aug. 6, 2013.
Poon, Robert "Final OA", U.S. Appl. No. 13/153,300, filed Jun. 3, 2011; dated Aug. 6, 2013.
Poon, Robert "NonFinal OA", U.S. Appl. No. 12/846,675, filed Jul. 29, 2010; dated Sep. 10, 2013.
Cavanna, Mark "Notice of Allowance", U.S. Appl. No. 29/444,526, filed Jan. 31, 2013; dated Oct. 17, 2013.
Hand, Melanie J., "Notice of Allowance", U.S. Appl. No. 13/155,054, filed Jun. 7, 2011; dated Oct. 28, 2013.
Poon, Robert "Notice of Allowance", U.S. Appl. No. 12/495,148, filed Jun. 30, 2009; dated Nov. 20, 2013.
"Instructions", Naming a character website. URL:.<https://web.archive.org/web/20080410122058/http://www.wilihow.com/Make-Your-Own-Anime-or-Mange-Character>, 2008.Retreived from Internet Dec. 10, 2013.
Naming Characters on Cards website. URL:<https://web.archive.org/web/20060219171403/http://www.hubbardscupboard.org/brown_bear_brown_bear.html>. (2006) . . . Retrieved form Internet Dec. 11, 2013.
Dictionary definition m-w. URL:<http://www.merriam-webster.com/dictionary/brave>. Retrieved fro Internet Dec. 10, 2013.
Dictionary definition m-w. URL:<http://ww.merriann-webster.com/dictionary/reassure>. Retrieved from Internet Dec. 10, 2013.
Lion King Sticker website. URL:<http://kobession.wuffpaws.org/OldSite/games/games2.html>. 1996 Retrieved from Internet Dec. 10, 2013.
Lion Sticker Activity Book website. URL: <http://www.amazon.com/Disneys-Simbas-Pride-Sticker-Activity/dp/B0018DOJZA>. 1998 Retrieved from Internet Dec. 10, 2013.
"Examiner's Answer", U.S. Appl. No. 13/153,265, filed Jun. 3, 2011; dated Dec. 17, 2013.
Poon, Robert "NonFinal OA", U.S. Appl. No. 12/647,515, filed Dec. 27, 2009; dated Dec. 18, 2013.
Poon, Robert "Final OA", U.S. Appl. No. 12/846,675, filed Jul. 29, 2010; dated Dec. 18, 2013.
"Extended EPO Exam Report", EPO App No. 10251025.2; Filed Jun. 2, 2010; dated Dec. 17, 2013.
Poon, Robert "Notice of Allowance", U.S. Appl. No. 12/846,675, filed Jul. 29, 2010; dated Apr. 30, 2014.
Gimenez Burgos, R "Extended European Search Report", 11854003.8; Filed Dec. 30, 2011; dated Jun. 3, 2014.
"Bardex I.C. Infection Control Foley Tray", Bard Infection Control System; Bardex I.C. Directions for Use Infection Control Foley Tray; Copyright Dated 2006.
"Bardex I.C. Complete Care StateLock Device 350 ml Urine Meter Foley Tray with Bacteriostatic Collection System", Bard Infection Control System; Bardex I.C. Complete Care Directions for Use; Copyright Dated Sep. 2006.
"Bardex I.C. Infection Control 350ml Urine Meter Foley Tray", Bard Infection Control System; Bardex I.C. Urine Meter Foley Tray Directions for Use; Copyright Dated 2006.
"Bard Medical Division Care & Catheterization Script", Care & Catheterization/Preventing UTI Script for education video; Preventing UTI: Care and Catheterization Techniques; Copyright 2006; AV0512-06 R12/052 XXX.
Medline Industries, Inc. vs *C.R. Bard, Inc*; No. 14-cv-3618; C.R. Bard's LPR 2.3 Contentions—Inital Non-Infringement; Exhibits 1 and A-H; dated Sep. 5, 2014.
Medline Industries, Inc. vs *C.R. Bard, Inc*; No. 1:14-cv-03618; Medline Industries, Inc.'s Response to C.R. Bard's Inital Invalidity Contentions; Exhibits A-H; dated Sep. 19, 2014.
Medline Industries, Inc. vs *C.R. Bard, Inc*; No. 1:14-cv-3618; Responses to Medline Industries, Inc.'s First set of Requests for the Production of Documents; dated Sep. 26, 2014.
Medline Industries, Inc. vs *C.R. Bard, Inc*; No. 1:14-cv-03618; Response to Medline Industries, Inc.'s First Set of Interrogatories; dated Sep. 26, 2014.
"Publication", European Commission: Pharmaceutical Committee "A Guideline on the Readability of the Label and Package Leaflet of Medicinal Products for Human Use"; Dated Sep. 29, 1998.
"Bard Publication", "A few important words about Catheter Care"; C.R. Bard, Inc; Copyright 2001 C.R. Bard, Inc.
"NonFinal Office Action", U.S. Appl. No. 13/680,902, filed Apr. 11, 2014; dated Dec. 2, 2014.
"Inter Partes Review Petition for U.S. Pat. No. 8,448,786", U.S. Pat. No. 8,448,786; Filed Dec. 30, 2014; Mailed Dec. 30, 2014.
"Inter Partes Review Petition", IPR Exhibit—Kimmel Declaration U.S. Pat. No. 8,448,786 Patent; Dr. Robert M. Kimmel Declaration; Received Dec. 30, 2014.
"Inter Partes Review Petition", Exhibit; Kimmel CV—Dr. Robert M. Kimmel; Mailed Dec. 30, 2014.
"Inter Partes Review Petition", IPR Exhibit—Susan Carrow Declaration U.S. Pat. No. 8,448,786 patent; mailed Dec. 30, 2014.
"Inter Partes Review Petition", Exhibit; Carrow CV—Susan Carrow CV; Mailed Dec. 30, 2014.
"Inter Partes Review Petition", Exhibit; EC Guideline 2009; "Guideline on the Readability of the Labelling and Package Leaflet of Medicinal Products for Human Use"; Revision 1 Published Jan. 12, 2009 (Jan. 12, 2009); Mailed Dec. 30, 2014.
"Inter Partes Review Petition", Exhibit—EC Guideline 1998; "A Guideline on the Readability of the Label and Package Leaflet of Medicinal Products for Human Use"; Published Sep. 29, 1998 (Sep. 29, 1998); Mailed Dec. 30, 2014.

(56) **References Cited**

OTHER PUBLICATIONS

"Inter Partes Review Petition", Exhibit—Nursing Standard; Article in Learning Zone—Continue Professional Development; "Reducing the risks associated with urinary catheters"; Published Mar. 25, 2009.
"Inter Partes Review Petition", Exhibit—Medline Initial Infringement Contentions; *Medline Industries* vs. *C.R. Bard*; Dated Aug. 22, 2014.
"Inter Partes Review Petition", Exhibit—Health Protection Scotland; CAUTI Maintenance Bundel; Version 2, Feb. 2008.
"Inter Partes Review Petition for U.S. Pat. No. 8,631,935", Inter Partes Review Petition for U.S. Pat. No. 8,631,935 for claims 1-4 and 11-20; Filed Dec. 30, 2014.
"Inter Partes Review Petition for U.S. Pat. No. 8,631,935", Inter Partes Review Petition for U.S. Pat. No. 8,631,935 for Claims 7-8, 10, 21-23, 25, 27-28, and 30-34; Filed Dec. 30, 2014.
"Inter Partes Review Petition for U.S. Pat. No. 8,678,190", Inter Partes Review Petition for U.S. Pat. No. 8,678,190; Filed Dec. 30, 2014.
"Inter Partes Review Petition", Exhibit—Kimmel Declaration for U.S. Pat. No. 8,631,935 claims 1-4 and 11-20; Declaration of Dr. Robert M. Kimmel; Mailed Dec. 30, 2014.
"Inter Partes Review Petition", Exhibit—Declaration of Susan Carrow for U.S. Pat. No. 8,631,935 claims 1-4 and 11-20; Mailed Dec. 30, 2014.
"Inter Partes Review Petition", Exhibit—Response to Office Action in U.S. Appl. No. 12/495,148, filed Jun. 30, 2009; Response Filed Nov. 19, 2010.
"Inter Partes Review Petition", Exhibit—RCE Filed Nov. May 31, 2011 for U.S. Appl. No. 12/495,148, filed Jun. 30, 2009.
"Inter Partes Review Petition", Exhibit—Amendment filed on Apr. 3, 2013 for U.S. Appl. No. 12/495,148, filed Jun. 30, 2009.
"Inter Partes Review Petition", Exhibit—Infection Control Today Article; Medical Center Cuts Catheterizations by 21 Percent with Foley Catheter Management System; Published 2010.
"Inter Partes Review Petition", Exhibit—Morning Start Article; "Floyd Medical Center Reduces Catheter-Associated Urinary Tract Infections 83 Percent and Catheter Use by 23 Percent"; Published Jan. 2011.
"Inter Partes Review Petition", Exhibit—Medical News Today Article; 'Getting to Zero:'Medlines 'Erase Cauti Program Helps Hospitals Reduce Catheter Use by 20 Percent; Article Date Apr. 13, 2011.
"Inter Partes Review Petition", Exhibit—The Journal of Healthcare Contracting, Oct. 2012; "Catheter-associated urinary tract infections".
"Inter Partes Review Petition", IPR Exhibit—Kimmel Declaration for U.S. Pat. No. 8,631,935 claims 1-4 and 11-20; Declaration of Dr. Robert M. Kimmel; Mailed Dec. 30, 2014.
"Inter Partes Review Petition", IPR Exhibit—Carrow Declaration for U.S. Pat. No. 8,631,935 claims 1-4 and 11-20; Susan Carrow Declaration; Mailed Dec. 30, 2014.
"Inter Partes Review Petition", IPR Exhibit—Kimmel Declaration for U.S. Pat. No. 8,631,935 claims 7-8, 10, 21-23, 25, 27-28, and 30-34; Declaration of Dr. Robert M. Kimmel; Mailed Dec. 30, 2014.
"Inter Partes Review Petition", IPR Exhibit—Kimmel Declaration for U.S. Pat. No. 8,768,190; Declaration of Dr. Robert M. Kimmel; Mailed Dec. 30, 2014.
"Inter Partes Review Petition", IPR Exhibit—Carrow Declaration for U.S. Pat. No. 8,768,190; Declaration of Susan Carrow; Mailed Dec. 30, 2014.
Poon, Robert "NonFinal OA", U.S. Appl. No. 14/265,909, filed Apr. 30, 2014; dated Dec. 31, 2014.
Poon, Robert "NonFinal OA", U.S. Appl. No. 14/265,920, filed Apr. 30, 2014; dated Dec. 30, 2014.
Gimenez Burgos, R "European Examination Report", European Application No. 11 854 003.8-1659; dated Jan. 22, 2015.
Gimenez Burgos, R "Extended European Search Report", EPO App No. 12 79 3939; dated Jan. 27, 2015.
Gimenez Burgos, R "Extended European Search Report", EU App No. 12792423.1-1659/2713933; PCT/US2012039311; dated Jan. 27, 2015.
"Bard IPR Exhibit", "Inter Partes Review Petition", IPR Exhibit—Carrow Declaration for U.S. Pat. No. 8,631,935; Susan Carrow Declaration; dated Dec. 30, 2014.
"Article 94(3) EPC Examination", European Application No. 10 251 025.2-1501; dated Mar. 13, 2015.
Poon, Robert "Final OA", U.S. Appl. No. 12/647,515, filed Dec. 27, 2009; Mailed Apr. 7, 2015.
"Office Action", Chinese Application No. 201180066491.4; dated Mar. 24, 2015.
"Inter Partes Review—Patent Owner Response", Inter Partes Review—Patent Owner Response; U.S. Pat. No. 8,448,786; IPR2015-00509; Filed Apr. 22, 2015.
"Inter Partes Review—Patent Owner Response", Inter Partes Review—Patent Owner Response; U.S. Pat. No. 8,631,935; Inter Partes Review No. IPR2015-00511; Filed Apr. 22, 2015.
"Inter Partes Review—Patent Owner Response", Inter Partes Review—Patent Owner Response; U.S. Pat. No. 8,631,935; Inter Partes Review No. IPR2015-00513; Filed Apr. 21, 2015.
"Inter Partes Review—Patent Owner Response", Inter Partes Review—Patent Owner Response; U.S. Pat. No. 8,678,190; Inter Partes Review No. IPR2015-00514; Filed Apr. 21, 2015.
"IPR2015-00514 Decision Institution of Inter Partes Review", IPR2015-00514; U.S. Pat. No. 8,678,190; Mailed Jun. 26, 2015; Decision Institution of Inter Partes Review.
"IPR2015-00509 Institution Decision", IPR2015-00509; U.S. Pat. No. 8,448,786; Mailed Jul. 15, 2015; Decision Denying Institution of Inter Partes Review.
"IPR 2015-00514 Petitioner's Request for Rehearing", IPR 2015-00514 Petitioner's Request for Rehearing; U.S. Pat. No. 8,678,190; Dated Jul. 10, 2015.
"IPR2015-00511 Institution Decision", IPR2015-00511; U.S. Pat. No. 8,631,935; Entered Jul. 15, 2015; Decision Denying Institution of Inter Partes Review.
"IPR2015-00513 Institution Decision", IPR2015-00513 Institution Decision; U.S. Pat. No. 8,631,935; Entered Jul. 15, 2015; Decision Institution of Inter Partes Review.
Hand, Melanie JO "Final OA", U.S. Appl. No. 13/860,902, filed Apr. 11, 2013; dated May 22, 2015.
"IPR 2015-00514—Request for Rehearing Denied", IPR2015-00514; U.S. Pat. No. 8,678,190; Decision on Request for Rehearing—Denied; Mailed Jul. 16, 2015.
"IPR 2015-00514—Patent Owner's Objection to Evidence", IPR 2015-00514—Patent Owner's Objection to Evidence Submitted During a Preliminary Proceeding; U.S. Pat. No. 8,678,190; Mailed Jul. 13, 2015.
"IPR2015-00513—Patent Owner's Request for Adverse Judgement", U.S. Pat. No. 8,631,935; Mailed Jul. 23, 2015.
"IPR0215-00513 Scheduling Order", U.S. Pat. No. 8,631,935; Mailed Jul. 15, 2015.
"IPR 2015-00514—Patent Owner's Request for Adverse Judgement", U.S. Pat. No. 8,678,190; Mailed Jul. 23, 2015.
"IPR2015-00514—Scheduling Order", U.S. Pat. No. 8,678,190; Mailed Jun. 26, 2015.
"IPR2015-00514 Judgement—Termination of Proceeding", U.S. Pat. No. 8,678,190; Mailed Jul. 24, 2015.
Hand, Melanie J., "Notice of Allowance", U.S. Appl. No. 13/860,902, filed Apr. 11, 2013; dated Aug. 4, 2015.
"IPR2015-00513—Request for Adverse Judgement", IPR2015-00513—Request for Adverse Judgement; Granted—Proceedings Terminated; U.S. Pat. No. 8,631,935; dated Aug. 11, 2015.
"Australian First Exam Report", AU Patent Application No. 2011351971; Patent Examination Report No. 1; Mailed 25JL2015.
Poon, Robert "Final OA", U.S. Appl. No. 14/265,920, filed Apr. 30, 2014; dated Oct. 2, 2015.
Poon, Robert "Final OA", U.S. Appl. No. 14/265,909, filed Apr. 30, 2015; dated Oct. 5, 2015.
Medline Industries, Inc. vs *C.R. Bard, Inc*; No. 1:14-cv-03618; Notice of Medline Industries Inc's Motion to Dismiss C.R. Bard Inc's Inequitable Conduct Counterclaim and to strike affirmative defense for the '786 Patent; Filed Oct. 20, 2015.

(56) **References Cited**

OTHER PUBLICATIONS

Medline Industries, Inc. vs *C.R. Bard, Inc*; No. 1:14-cv-03618; Medline Industries Inc's Opposition to C.R.Bard Inc's Motion for Leave to File Second Amended Answer to Add Counterclaim; Filed Oct. 20, 2015.
Chinese Application No. 201280035240.4; Filed May 24, 2012; Mailed Aug. 18, 2015.
Hand, Melanie J., "NonFinal OA", U.S. Appl. No. 14/165,044, filed Jan. 27, 2014; dated Oct. 26, 2015.
Poon, Robert "NonFinal OA", U.S. Appl. No. 14/718,792, filed May 21, 2015; dated Nov. 19, 2015.
Medline Industries vs. *CR Bard, Inc*; No. 14-cv-3618; C.R. Bard's LPR 3.1 Contentions; Filed Nov. 24, 2015.
"Office Action Received", Chinese App No. 201280035246.1; NonFinal OA; dated Sep. 16, 2015.
Poon, Robert "Final Office Action", U.S. Appl. No. 14/718,912, filed May 21, 2015; dated Jan. 5, 2016.
"Office Action", Chinese Application No. 201180066491.4; dated Nov. 11, 2015.
Poon, Robert "Notice of Allowance", U.S. Appl. No. 14/718,792, filed May 21, 2015; dated Feb. 2, 2016.
"Office Action", Australian Application No. 2011351971; Reference No. 35204298/GP; dated Feb. 18, 2016.
Notice of Allowance; EP Application No. 10251025.2-1501; Reference P112645EP00; dated Feb. 18, 2016.
Mackenzie, Kristian "Office Action", Canadian Application No. 2,705,670; Ref No. 15468-8; dated Apr. 25, 2016.
Mackenzie, Kristian "Office Action", Canadian Application No. 2,705,647; Ref No. 15468-P37235CA00; dated Apr. 21, 2016.
Hand, Melanie JO "Appeal Decision", U.S. Appl. No. 12/785,064, filed May 21, 2010; dated May 18, 2016.
Poon, Robert "NonFinal OA", U.S. Appl. No. 15/067,903, filed Mar. 11, 2016; dated Jun. 30, 2016.
"Second Office Action", Chinese Application No. 201280035240.4; dated Jun. 23, 2016.
"Intent to Grant", Chinese Application No. 201280035246.1; Filed Dec. 30, 2011; dated Jul. 6, 2016.
"Notice of Acceptance", Australian Application No. 2011351971; Filed Dec. 30, 2011; dated May 13, 2016.
"Office Action", Chinese Application No. 201280035246.1; Filed May 11, 2012; dated Jul. 15, 2016.
Marcetich, Adam M., "Final OA", U.S. Appl. No. 14/165,044, filed Jan. 27, 2014; dated Aug. 11, 2016.
Medline Industries Inc. vs *C.R. Bard, Inc*; C.R. Bard's LPR 3.1 Contentions; Civil Action No. 1:16-cs-3529; Judge Sharon Johnson Coleman; Filed Aug. 26, 2016.
Marcetich, Adam "Notice of Allowance", U.S. Appl. No. 13/860,902, filed Apr. 11, 2013; dated Sep. 14, 2016.
Poon, Robert "NonFinal OA", U.S. Appl. No. 14/265,909, filed Apr. 30, 2014; dated Sep. 12, 2016.
Vasat, Peter "Notice of Allowance", U.S. Appl. No. 12/785,064, filed May 21, 2010; dated Sep. 12, 2016,.
Cavanna, Mark "Non-Final Office Action", U.S. Appl. No. 29/479,600, filed Jan. 17, 2014; dated Sep. 26, 2016.
Poon, Robert "Appeal Decision", U.S. Appl. No. 13/374,509, filed Dec. 30, 2011; dated Oct. 24, 2016.
Long, Fonya M "Appeal Decision", U.S. Appl. No. 13/154,265, filed Jun. 3, 2011; dated Oct. 6, 2016.
Poon, Robert "Appeal Decision", U.S. Appl. No. 13/153,300, filed Jun. 3, 2011; dated Oct. 12, 2016.
Marcetich, Adam "Notice of Allowance", U.S. Appl. No. 13/860,902, filed Apr. 11, 2013; dated Nov. 8, 2016.
Schultz, Ottmar "Extended European Search Report", EP Application No. 16177903-8-1501; Filed Jun. 30, 2009; dated Oct. 27, 2016.
Hand, Melanie J., "NonFinal OA", U.S. Appl. No. 13/860,902, filed Apr. 11, 2013; dated Apr. 1, 2016.
"Office Action", Chinese Application No. 201280035246.1; Filed May 11, 2012; dated Nov. 28, 2016.
Poon, Robert "Final OA", U.S. Appl. No. 15/067,903, filed Mar. 11, 2016; dated Jan. 13, 2017.
Poon, Robert "Final OA", U.S. Appl. No. 14/265,909, filed Apr. 30, 2014; dated Jan. 10, 2017.
Marcetich, Adam "Notice of Allowance", U.S. Appl. No. 14/165,044, filed Jan. 27, 2014; dated Feb. 28, 2017.
Mackenzie, Kristian "Office Action", Canadian Application No. 2,705,670; dated Feb. 10, 2017.
Mackenzie, Kristian "Office Action", Canadian Application No. 2,705,647; Ref No. 15486-P37235CA00 10055U CA; dated Feb. 10, 2017.
Pothier, Andrew "Office Action", Canadian Application No. 2,822,905; Reference No. 15468-P44352CA00; dated May 1, 2017.
"Third Office Action", Chinese Application No. 201280035240.4; dated Apr. 1, 2017.
Gilligan, C. Luke "Notice of Allowance", U.S. Appl. No. 13/153,265, filed Jun. 3, 2011; dated Jun. 15, 2017.
Cavanna, Mark "Final OA", U.S. Appl. No. 29/479,600, filed Jan. 17, 2014; dated Jun. 1, 2017.
"DVD", *Entitled "Preventing UTI: Care and Catheterization Techniques"; Publication Date unknown but believed to be prior to 2007.*

* cited by examiner

Bard Exhibit 1004.0557

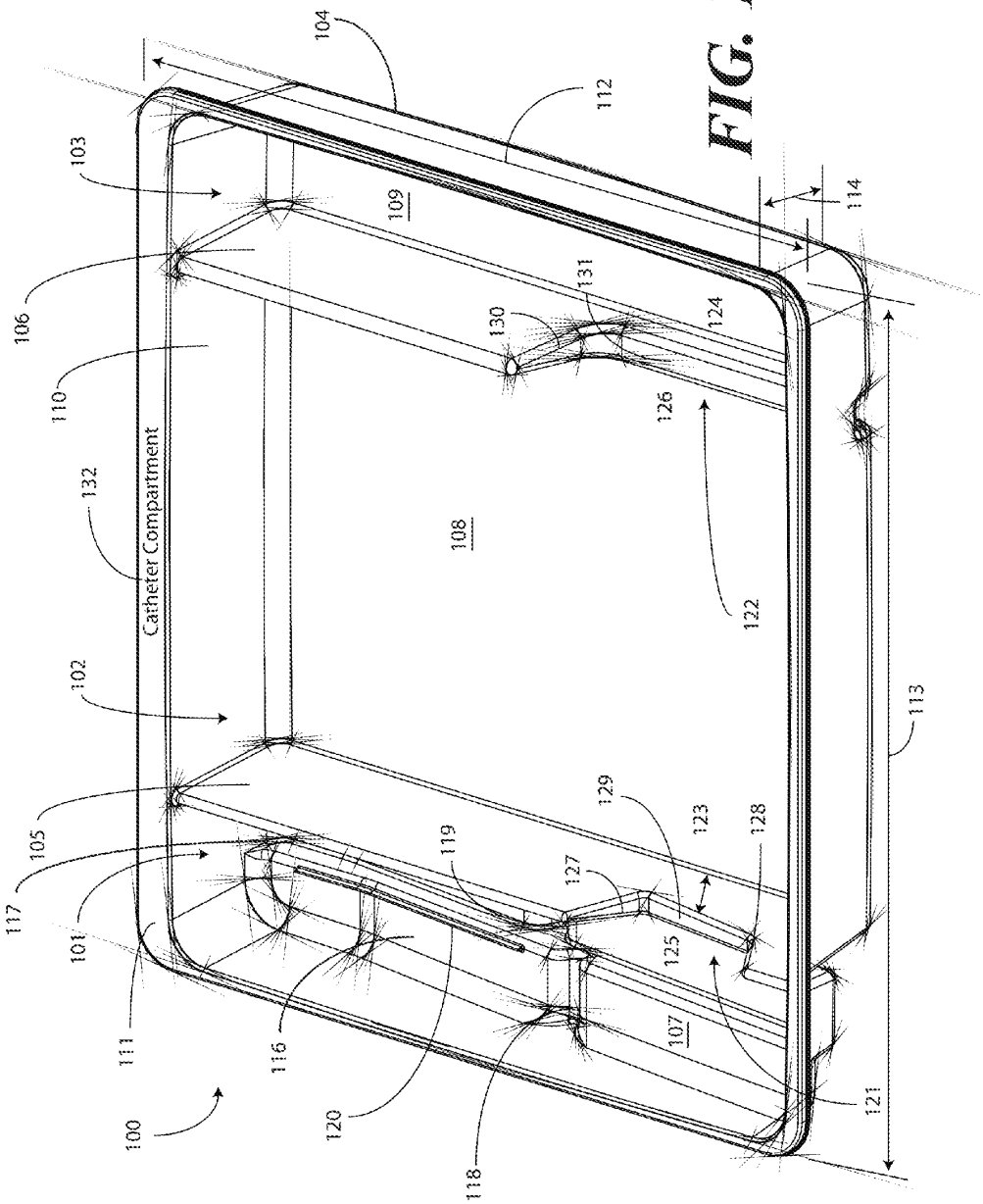

FIG. 1

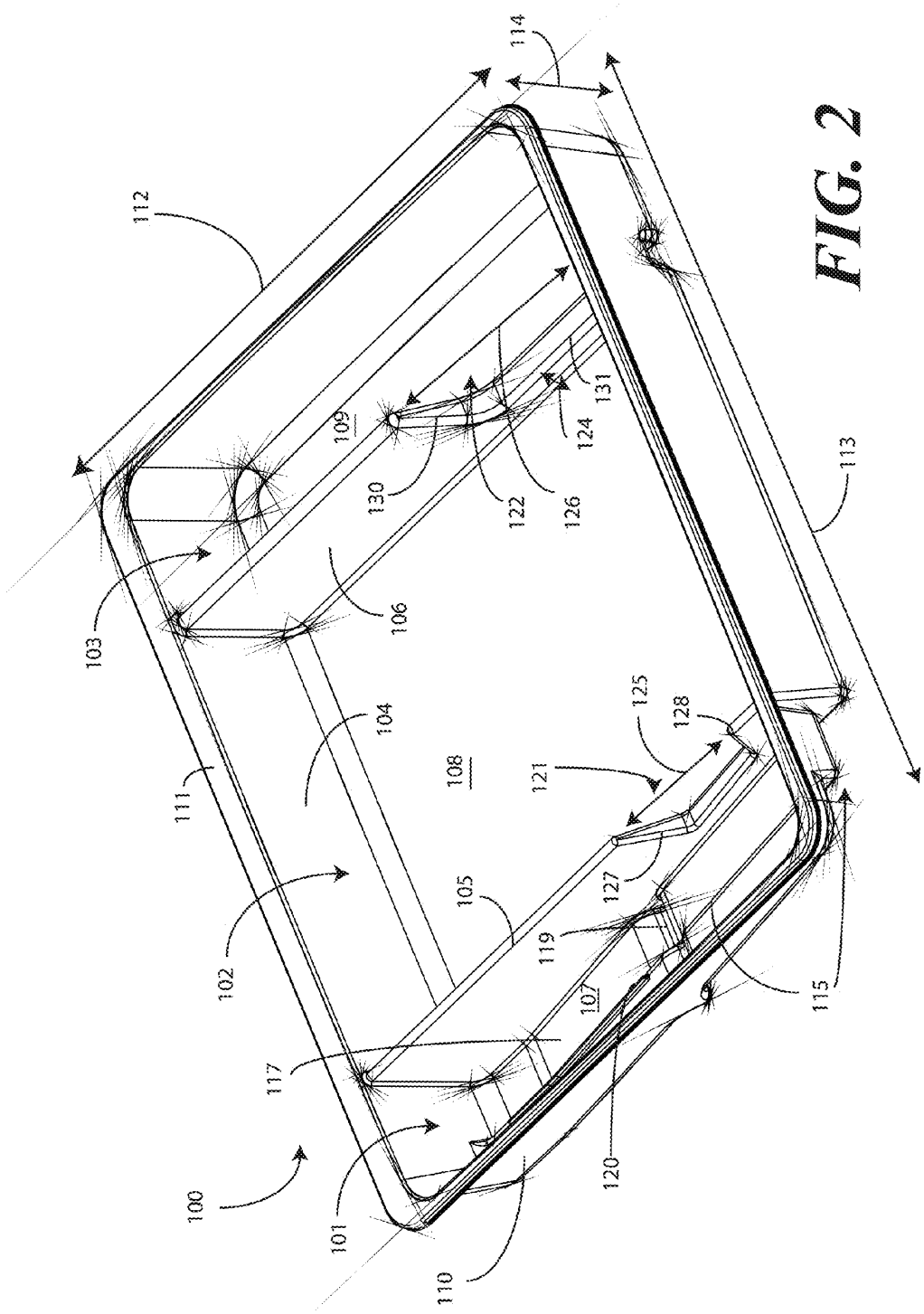
100
101
102
103
104
105
106
107
108
109
110
111
112
113
114
115
117
119
120
121
122
124
125
126
127
128
130
131

FIG. 2

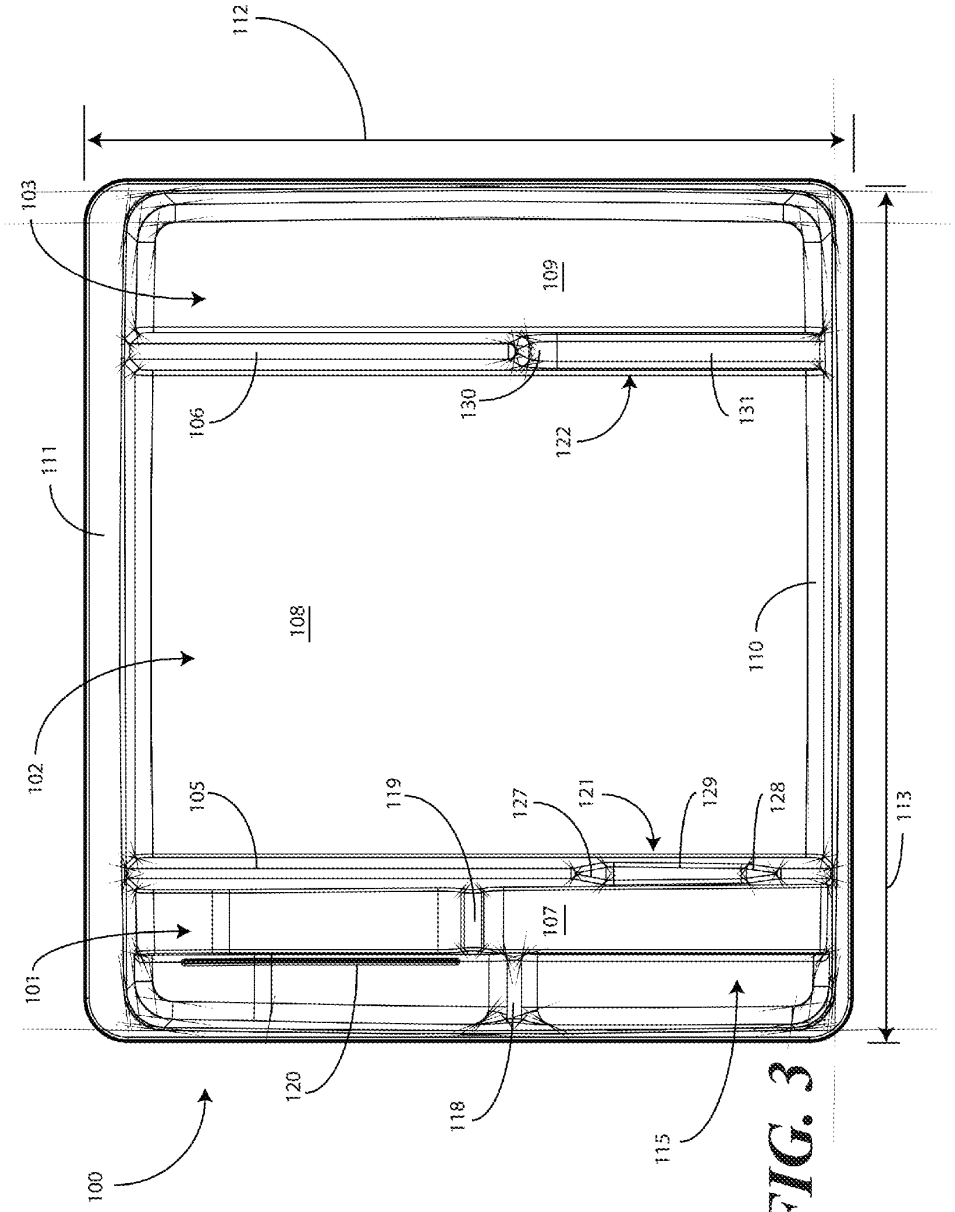
100
101
102
103
105
106
107
108
109
110
111
112
113
115
118
119
120
121
122
127
128
129
130
131

FIG. 3

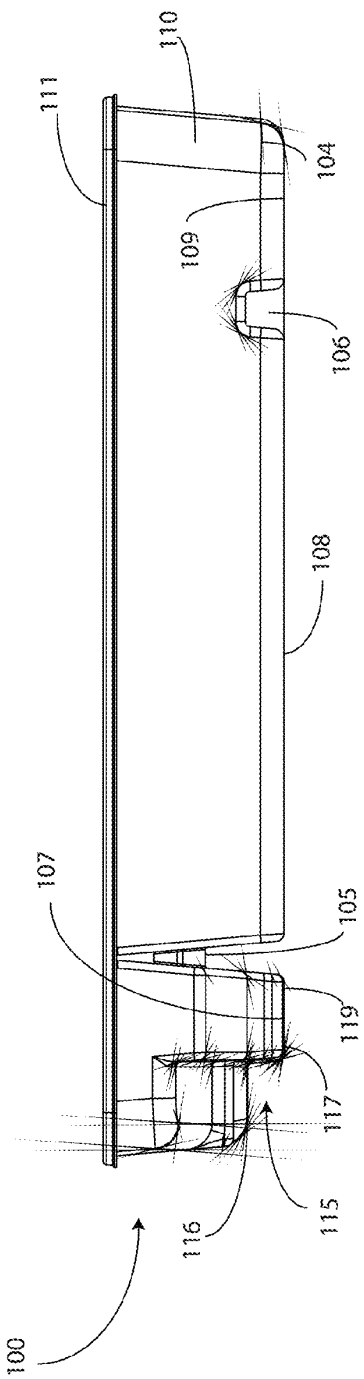
100
116
115
117
119
107
105
108
106
109
104
111
110

FIG. 4

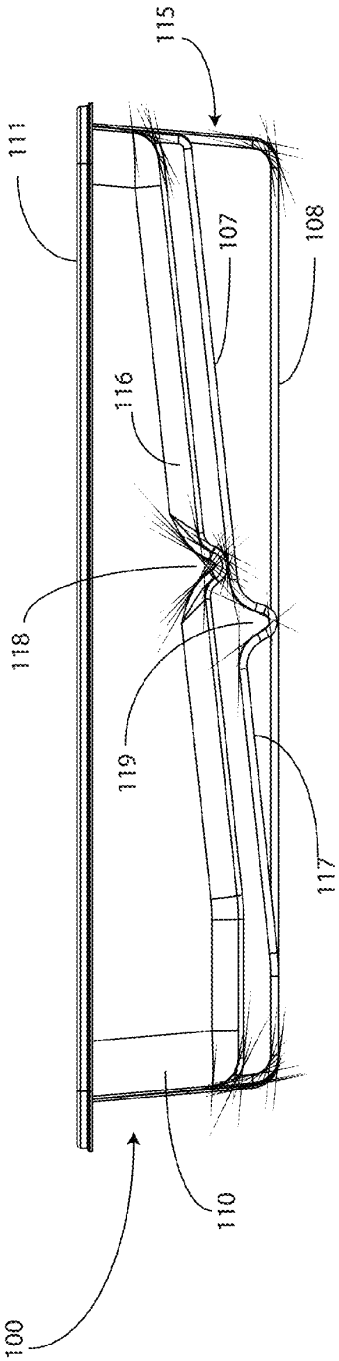
100
110
117
119
118
116
107
108
111
115

FIG. 5

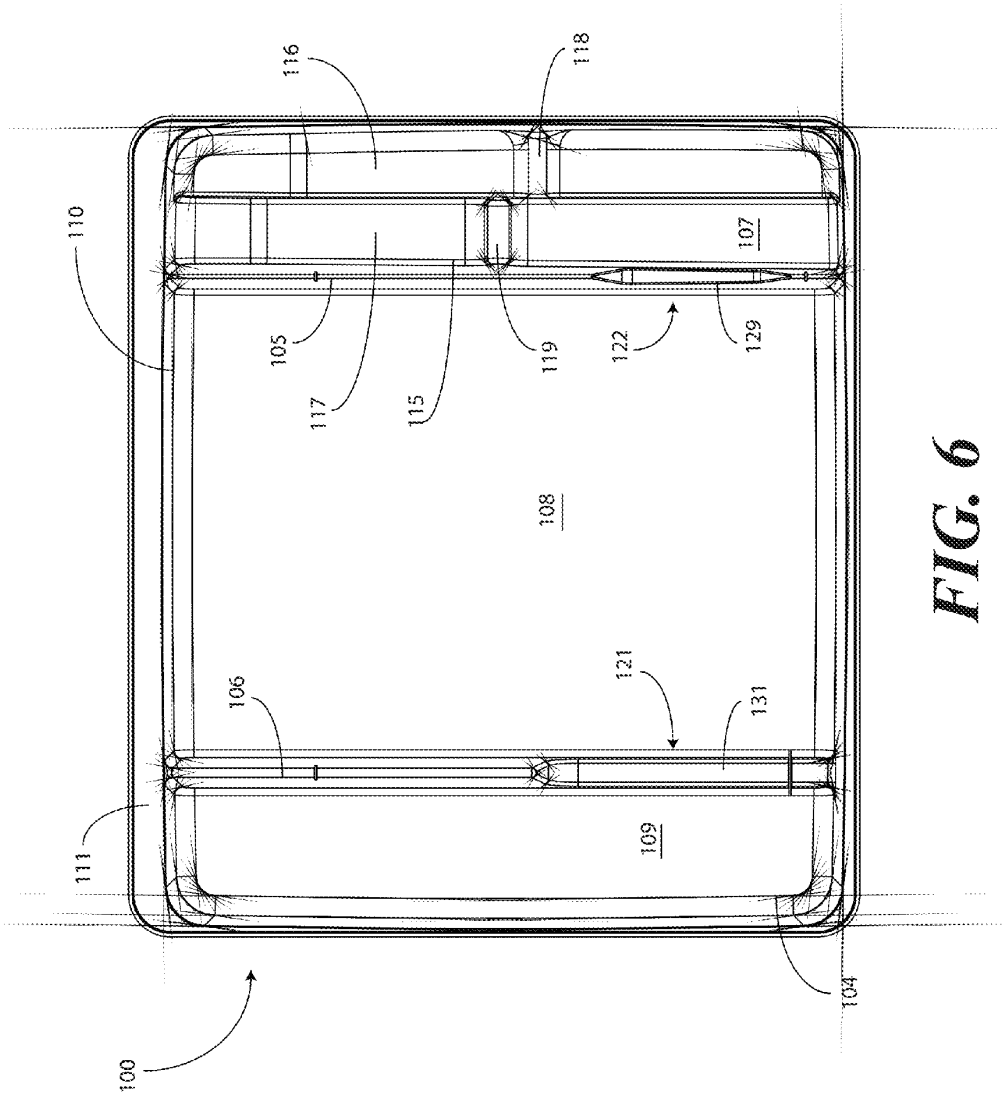
100
110
111
116
118
105
117
115
119
122
129
107
108
106
121
131
109
104

FIG. 6

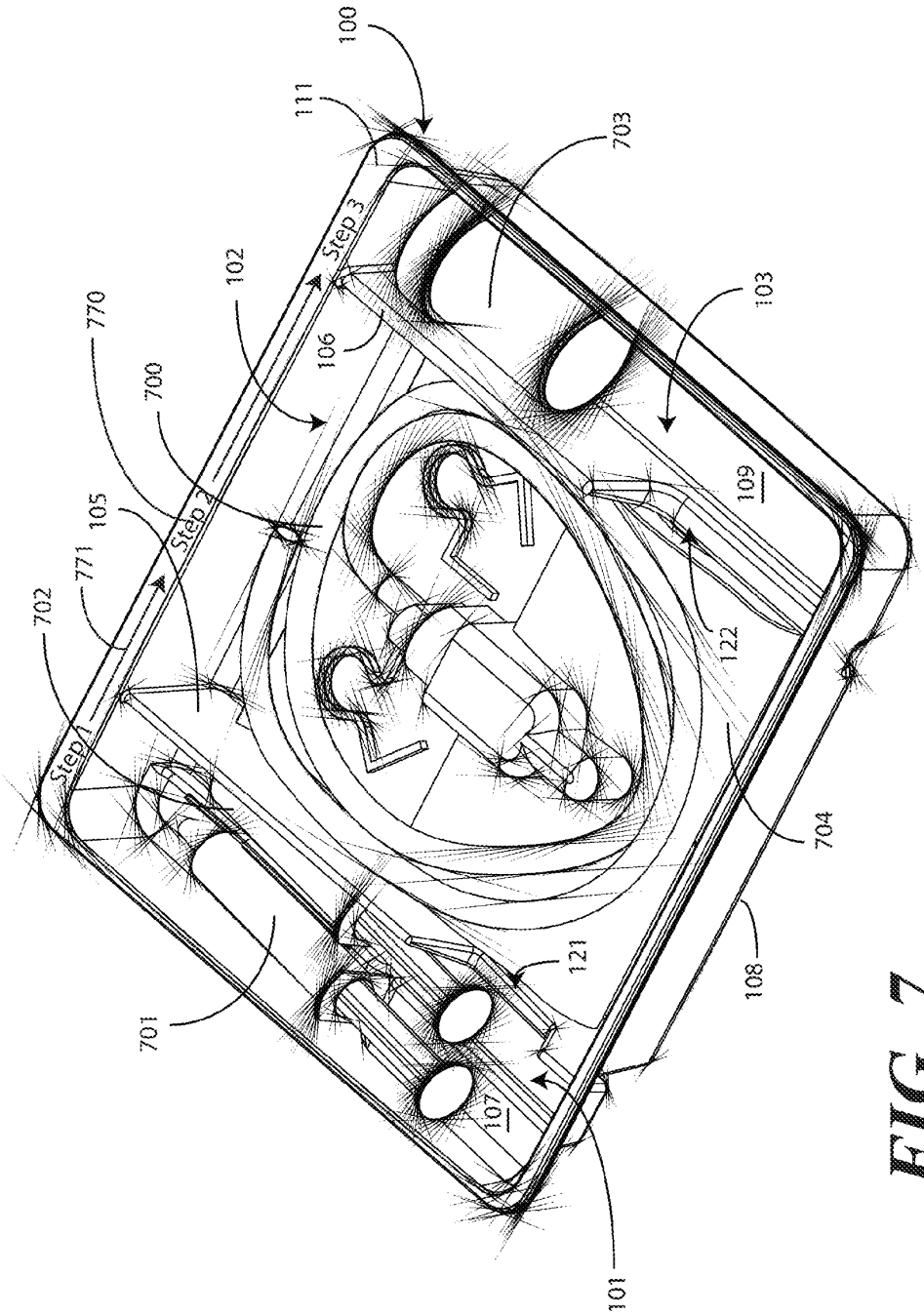
100
111
703
Step 3
102
106
103
770
700
105
Step 2
771
702
Step 1
109
122
704
108
121
701
107
101

FIG. 7

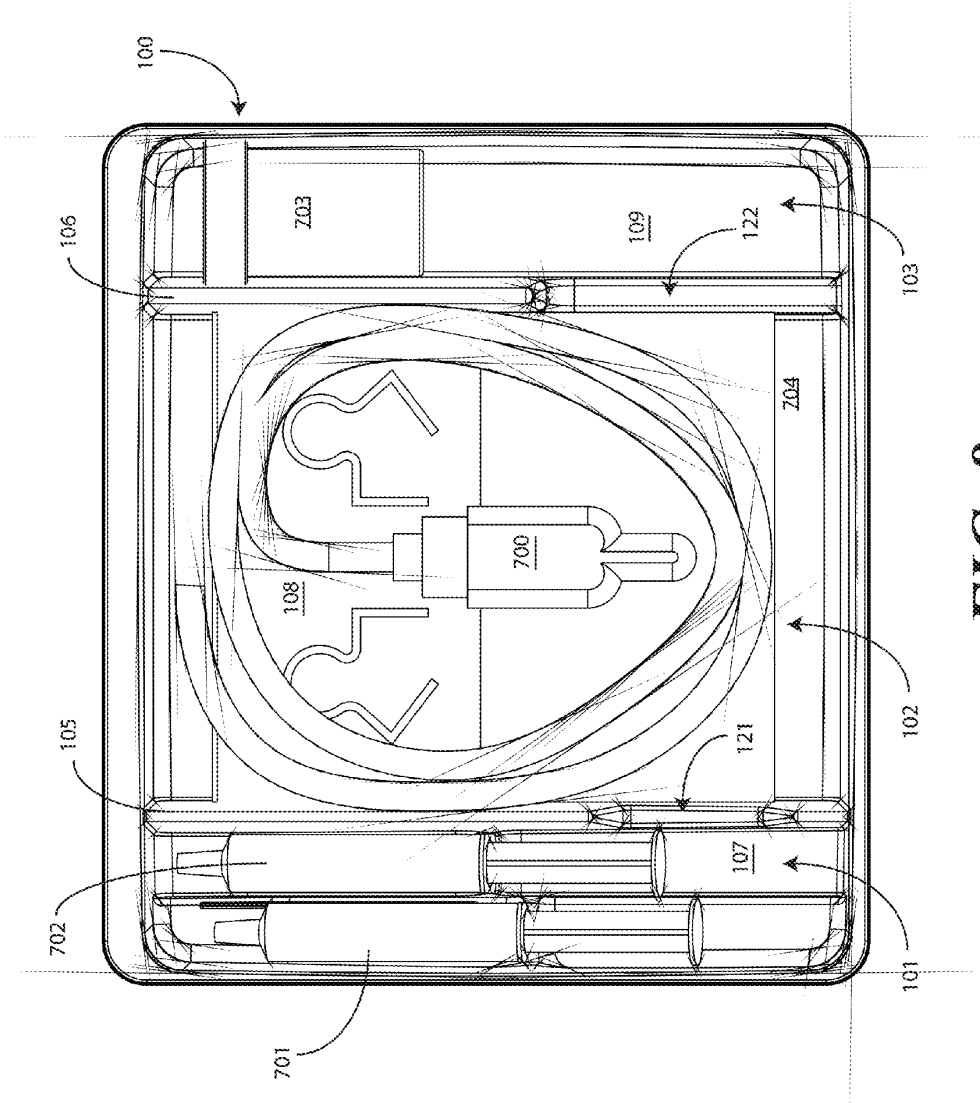

FIG. 8

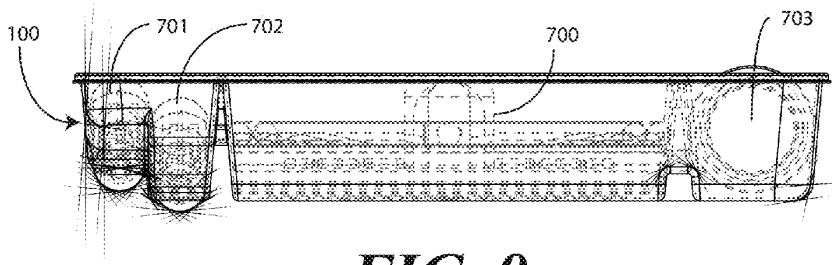
100
701
702
700
703

FIG. 9

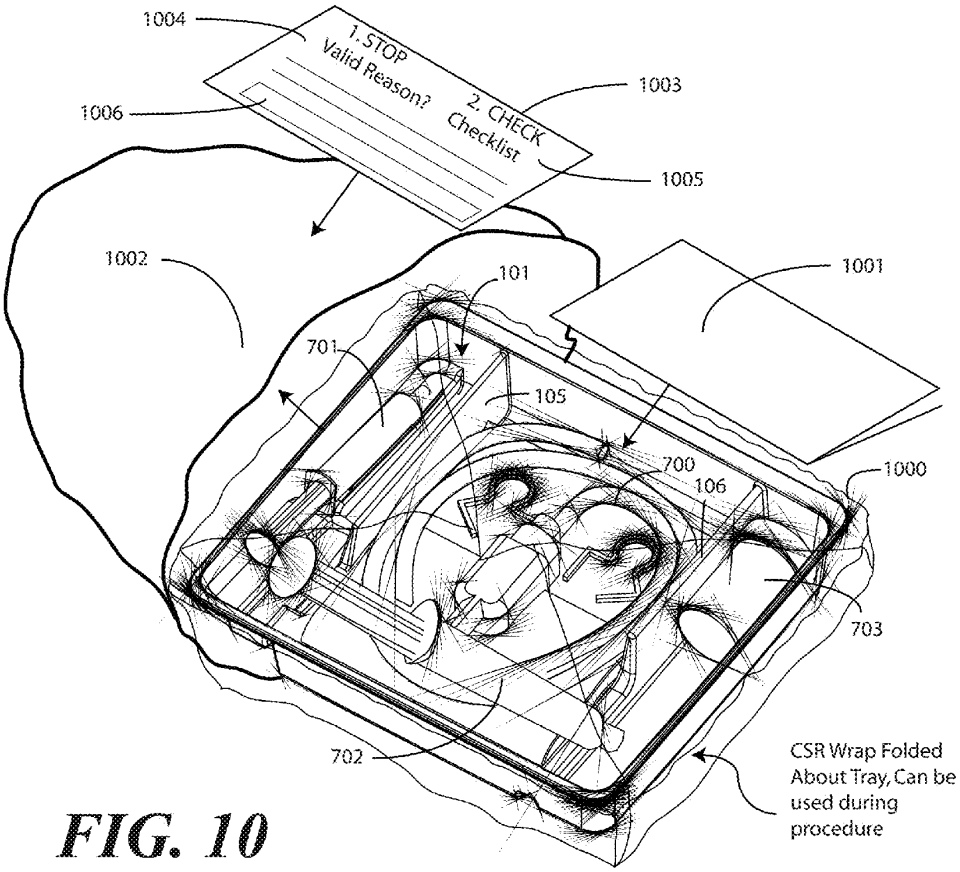
1004
1. STOP
Valid Reason?
2. CHECK
Checklist
1003
1006
1005
1002
101
1001
701
105
700
106
1000
703
702
CSR Wrap Folded
About Tray, Can be
used during
procedure

FIG. 10

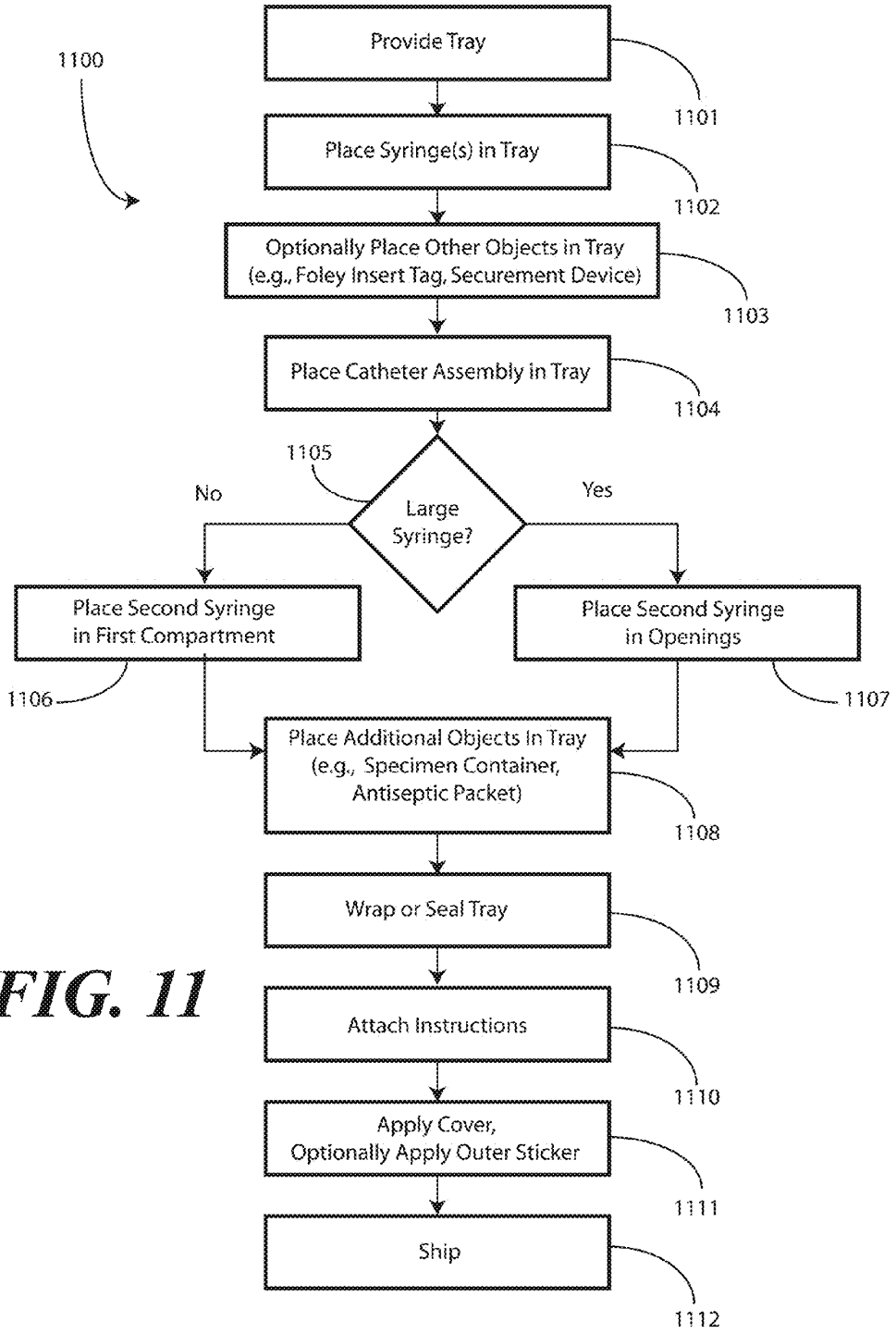
1100
Provide Tray
1101
Place Syringe(s) in Tray
1102
Optionally Place Other Objects in Tray
(e.g., Foley Insert Tag, Securement Device)
1103
Place Catheter Assembly in Tray
1104
1105
Large Syringe?
No
Yes
Place Second Syringe in First Compartment
1106
Place Second Syringe in Openings
1107
Place Additional Objects In Tray
(e.g., Specimen Container, Antiseptic Packet)
1108
Wrap or Seal Tray
1109
Attach Instructions
1110
Apply Cover,
Optionally Apply Outer Sticker
1111
Ship
1112

FIG. 11

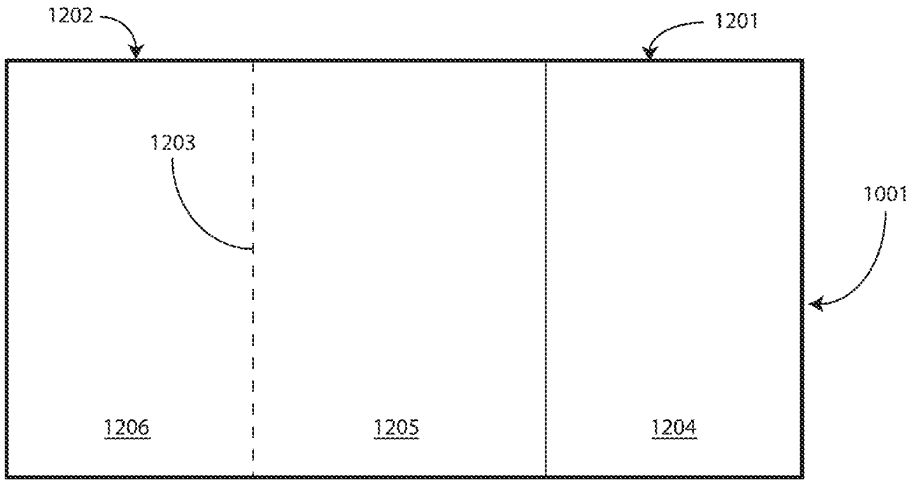
1202
1201
1203
1001
1206
1205
1204

FIG. 12

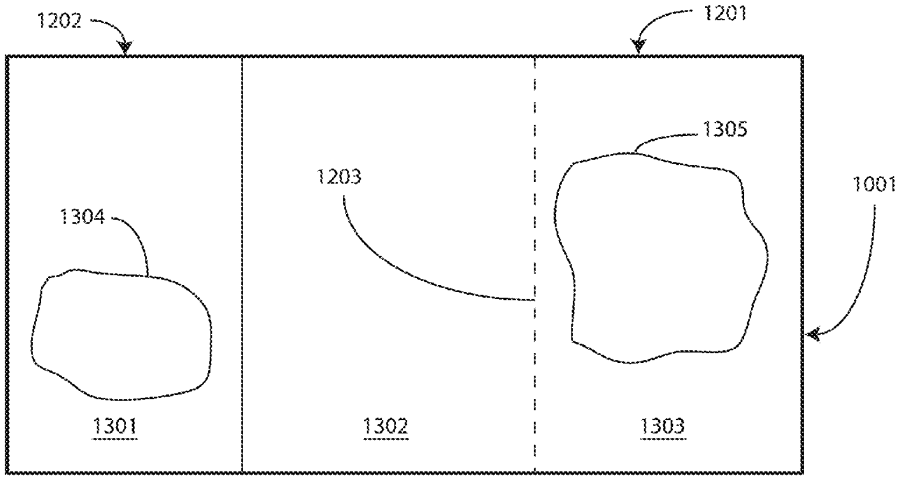
1202
1201
1305
1203
1001
1304
1301
1302
1303

FIG. 13

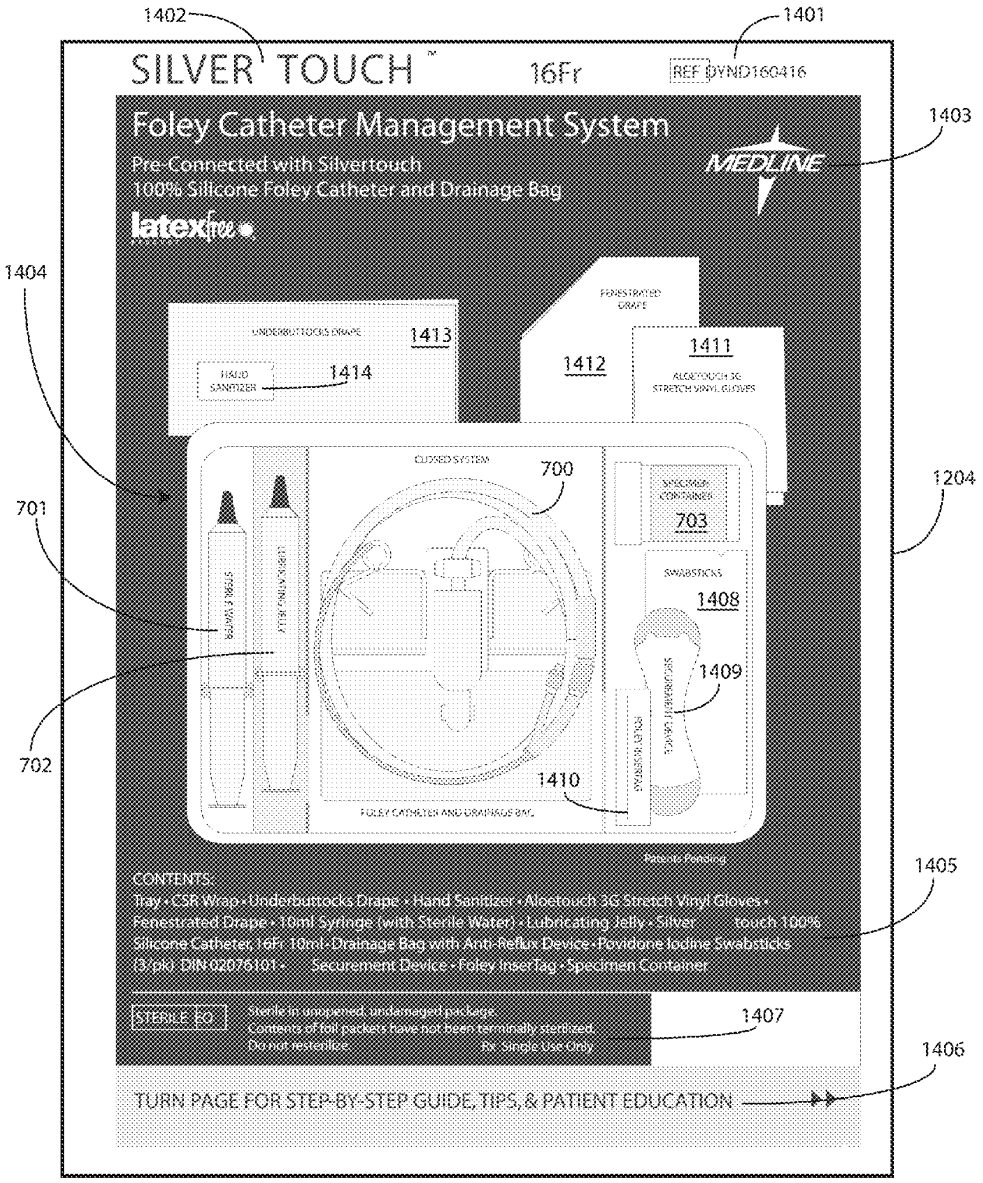
1402
1401
SILVER TOUCH ™
16Fr
REF DYND160416
Foley Catheter Management System
Pre-Connected with Silvertouch
100% Silicone Foley Catheter and Drainage Bag
latexfree
MEDLINE
1403
1404
FENESTRATED DRAPE
UNDERBUTTOCKS DRAPE
1413
HAND SANITIZER
1414
1412
1411
ALOETOUCH 3G STRETCH VINYL GLOVES
CLOSED SYSTEM
700
SPECIMEN CONTAINER
703
1204
701
SWABSTICKS
1408
1409
702
1410
FOLEY CATHETER AND DRAINAGE BAG
CONTENTS:
Tray • CSR Wrap • Underbuttocks Drape • Hand Sanitizer • Aloetouch 3G Stretch Vinyl Gloves • Penestrated Drape • 10ml Syringe (with Sterile Water) • Lubricating Jelly • Silver touch 100% Silicone Catheter 16Fr 10ml • Drainage Bag with Anti-Reflux Device • Povidone Iodine Swabsticks (3 pk) DIN 02076101 • Securement Device • Foley InserTag • Specimen Container
1405
STERILE EO
Sterile in unopened, undamaged package.
Contents of foil packets have not been terminally sterilized.
Do not resterilize.
Rx Single Use Only
1407
1406
TURN PAGE FOR STEP-BY-STEP GUIDE, TIPS, & PATIENT EDUCATION

FIG. 14

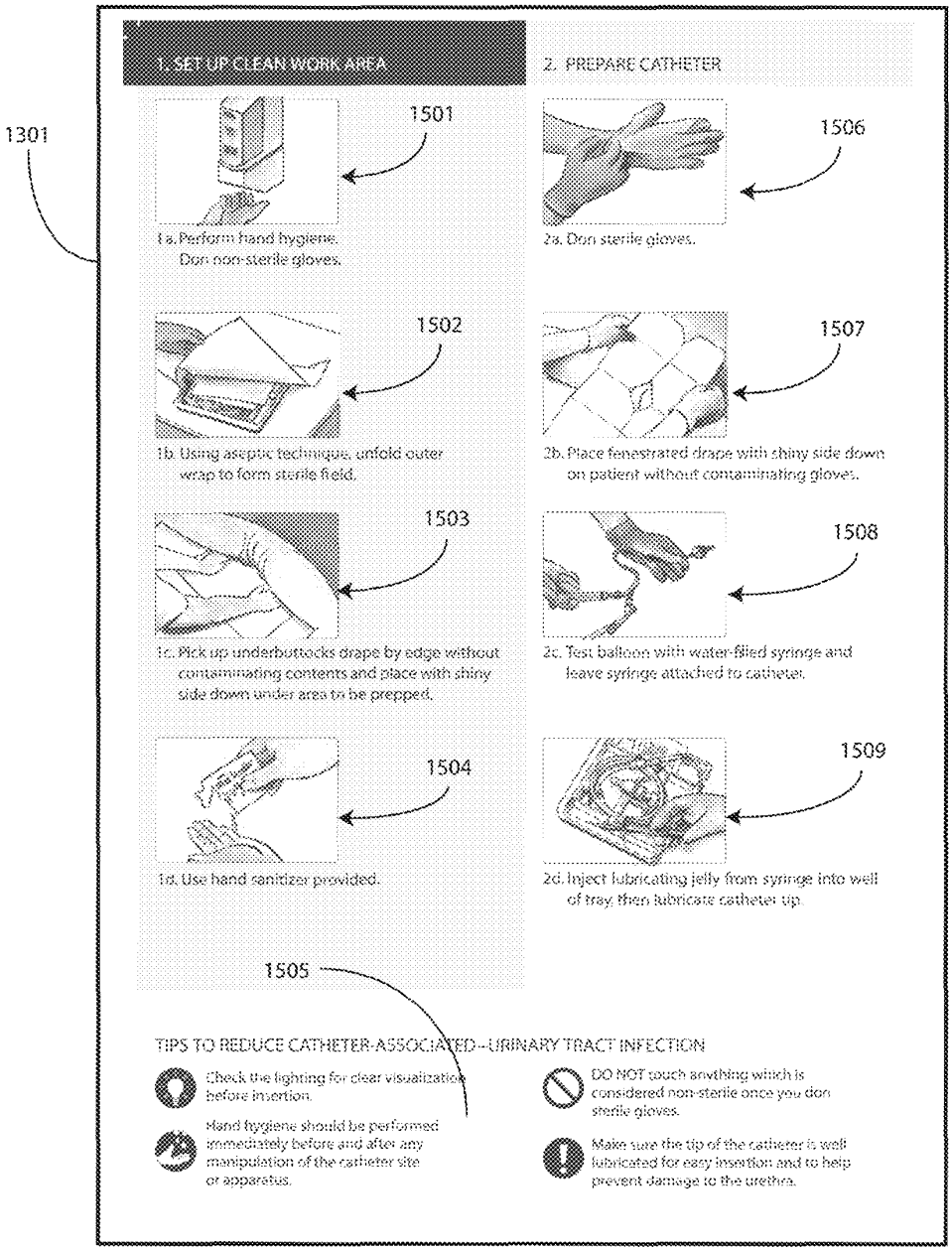
1301
1. SET UP CLEAN WORK AREA
2. PREPARE CATHETER
1501
1a. Perform hand hygiene. Don non-sterile gloves.
1502
1b. Using aseptic technique, unfold outer wrap to form sterile field.
1503
1c. Pick up underbuttocks drape by edge without contaminating contents and place with shiny side down under area to be prepped.
1504
1d. Use hand sanitizer provided.
1505
1506
2a. Don sterile gloves.
1507
2b. Place fenestrated drape with shiny side down on patient without contaminating gloves.
1508
2c. Test balloon with water-filled syringe and leave syringe attached to catheter.
1509
2d. Inject lubricating jelly from syringe into well of tray, then lubricate catheter tip.
TIPS TO REDUCE CATHETER-ASSOCIATED-URINARY TRACT INFECTION
Check the lighting for clear visualization before insertion.
Hand hygiene should be performed immediately before and after any manipulation of the catheter site or apparatus.
DO NOT touch anything which is considered non-sterile once you don sterile gloves.
Make sure the tip of the catheter is well lubricated for easy insertion and to help prevent damage to the urethra.

FIG. 15

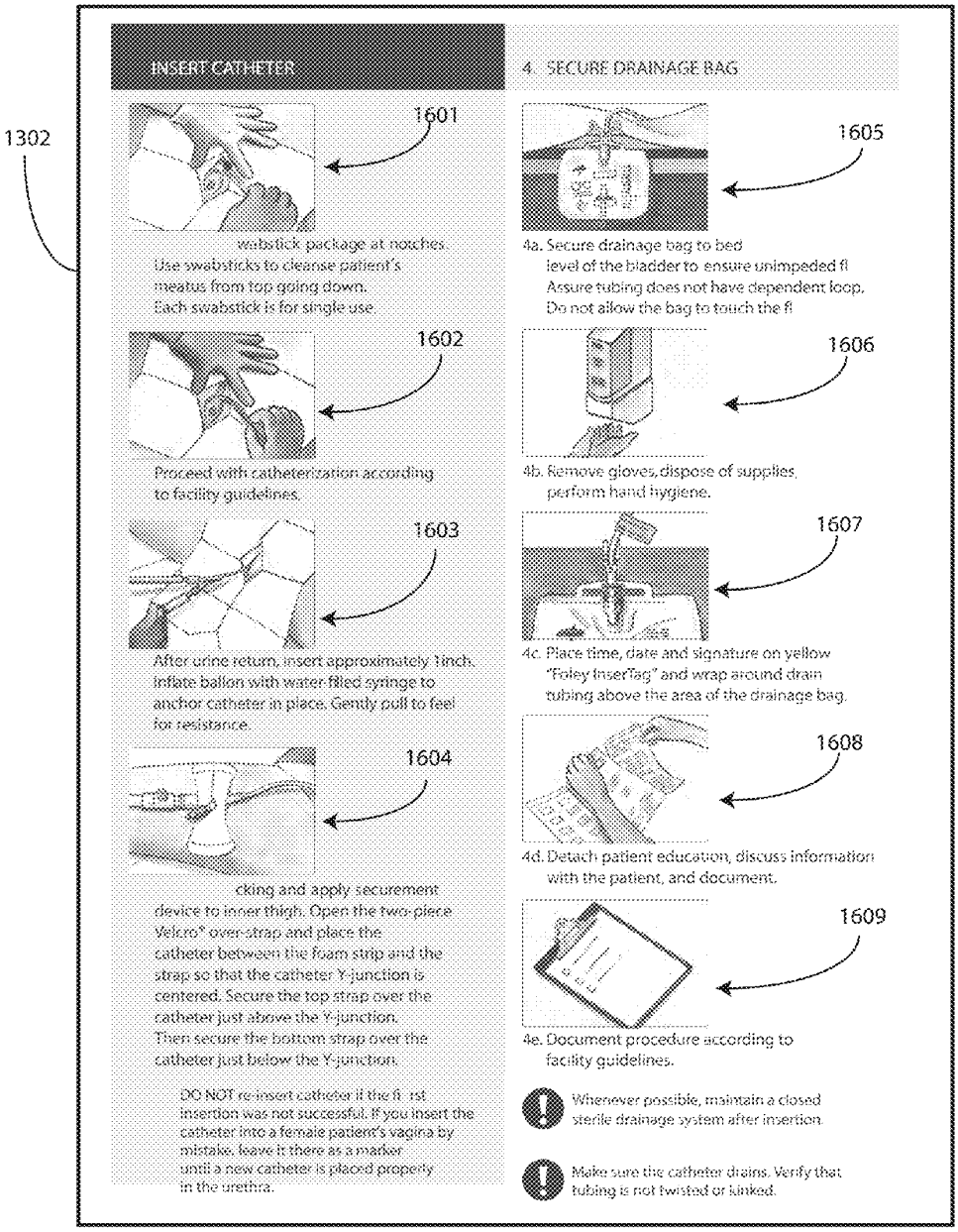
1302
INSERT CATHETER
1601
wabstick package at notches.
Use swabsticks to cleanse patient's
meatus from top going down.
Each swabstick is for single use.
1602
Proceed with catheterization according
to facility guidelines.
1603
After urine return, insert approximately 1inch.
Inflate ballon with water-filled syringe to
anchor catheter in place. Gently pull to feel
for resistance.
1604
cking and apply securement
device to inner thigh. Open the two-piece
Velcro* over-strap and place the
catheter between the foam strip and the
strap so that the catheter Y-junction is
centered. Secure the top strap over the
catheter just above the Y-junction.
Then secure the bottom strap over the
catheter just below the Y-junction.
DO NOT re-insert catheter if the fi rst
insertion was not successful. If you insert the
catheter into a female patient's vagina by
mistake, leave it there as a marker
until a new catheter is placed properly
in the urethra.
4. SECURE DRAINAGE BAG
1605
4a. Secure drainage bag to bed
level of the bladder to ensure unimpeded fl
Assure tubing does not have dependent loop.
Do not allow the bag to touch the fl
1606
4b. Remove gloves, dispose of supplies,
perform hand hygiene.
1607
4c. Place time, date and signature on yellow
"Foley InserTag" and wrap around drain
tubing above the area of the drainage bag.
1608
4d. Detach patient education, discuss information
with the patient, and document.
1609
4e. Document procedure according to
facility guidelines.
Whenever possible, maintain a closed
sterile drainage system after insertion.
Make sure the catheter drains. Verify that
tubing is not twisted or kinked.

FIG. 16

1701

1302

PATIENT EDUCATION: INFORMATION ABOUT CATHETERIZATION

1. What is a urinary catheter?

A thin flexible tube that drains urine from the bladder into a collection bag.

The catheter helps:

- When you can't urinate.
- To measure how much urine you're producing.
- During and after some surgeries or tests.

1702

2. What should you know about your catheter?

Only a trained provider inserts a catheter when necessary, and it is removed as soon as possible.

- Caregivers must wash hands with soap or use alcohol-based rubs before and after touching your catheter.
- If your caregivers don't clean their hands, it is o.k. to ask them to do so.
- Do not disconnect the catheter yourself.
- Ask every day whether you still need the catheter.

1703

3. Can you reduce your chances of getting an infection?

Absolutely!

- Wash your hands before and after touching your catheter.
- Make sure the tube is secured to your leg. Never twist, kink, or tug on it.
- Always keep the collection bag below the level of your belly button.
- Tell somebody whenever the bag is more than half full.

FIG. 17

PATIENT EDUCATION: INFORMATION ABOUT CATHETERIZATION

1206

4. What is a 'catheter-associated' urinary tract infection (UTI)?

Some helpful germs live in our urinary tract. But if a catheter introduces 'outside' germs, they can cause an infection. That's why hands must be washed before handling your catheter. It's also why catheters must be removed as soon as possible.

1801

5. What are some symptoms if you have a urinary tract infection (UTI)?

- Sudden fever and/or bloody urine.
- Burning or painful urination, or pain below the stomach.
- Frequent, or more urgent, urinating after catheter is removed.

Tell your physician/provider right away, because an antibiotic may be needed.

1802

6. What about when you're going home?

- If you'll be using a catheter, make sure your health care provider fully explains how to care for it.
- Be sure to find out who to contact if you have questions after you get home.

1803

My physician's/provider's information:

_____

Phone Number: _____

1804

Adapted from: Centers for Disease Control and Prevention. FAQs about "Catheter-Associated Urinary Tract Infection." Available at: http://www.cdc.gov/ncidod/dhqp/pdf/guidelines/CA-UTI_faqued.pdf. Accessed March 25, 2009.

©2009 Medline Industries, Inc. Silvertouch and Aloetouch are trademarks of Medline Industries, Inc. Assembled in USA by Medline Industries, Inc. Mundelein, IL 60060-4486 USA. Distributed in Canada by Medline Canada Corp., Oakville, Ontario L6L6R2. www.medline.com 1-800-MEDLINE DYND150416 RG09VDYN867158U

FIG. 18

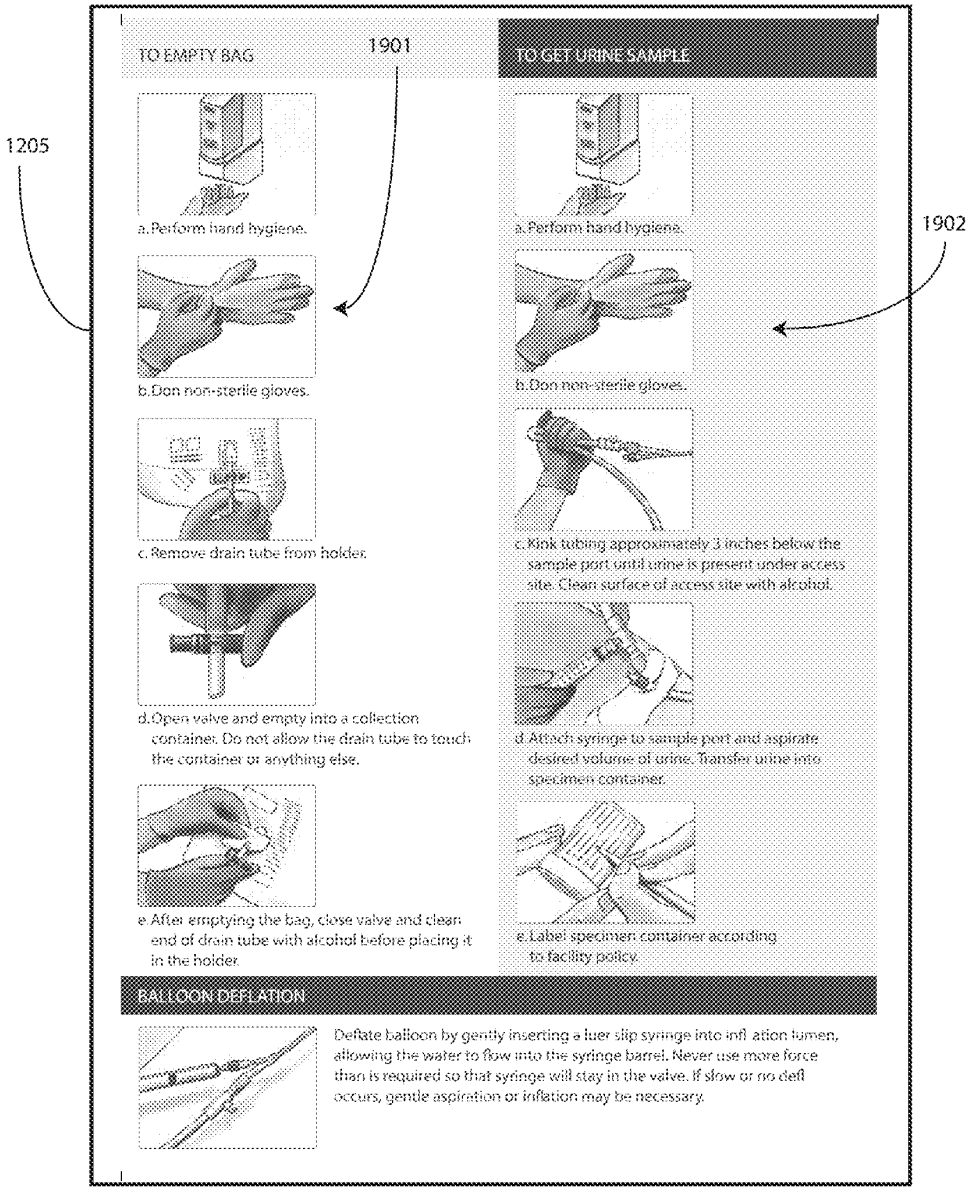
1205
1901
1902
TO EMPTY BAG
a. Perform hand hygiene.
b. Don non-sterile gloves.
c. Remove drain tube from holder.
d. Open valve and empty into a collection container. Do not allow the drain tube to touch the container or anything else.
e. After emptying the bag, close valve and clean end of drain tube with alcohol before placing it in the holder.
TO GET URINE SAMPLE
a. Perform hand hygiene.
b. Don non-sterile gloves.
c. Kink tubing approximately 3 inches below the sample port until urine is present under access site. Clean surface of access site with alcohol.
d. Attach syringe to sample port and aspirate desired volume of urine. Transfer urine into specimen container.
e. Label specimen container according to facility policy.
BALLOON DEFLATION
Deflate balloon by gently inserting a luer slip syringe into infl ation lumen, allowing the water to flow into the syringe barrel. Never use more force than is required so that syringe will stay in the valve. If slow or no defl occurs, gentle aspiration or inflation may be necessary.

FIG. 19

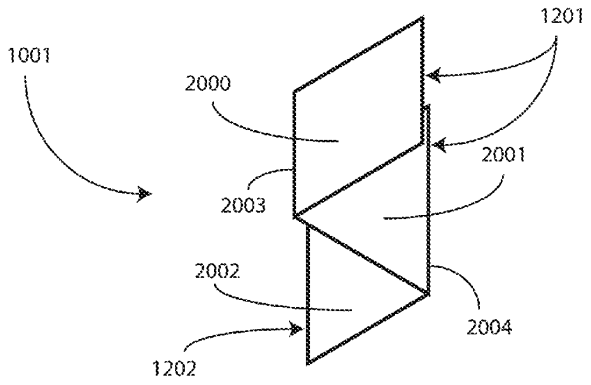
1001
2000
1201
2001
2003
2002
2004
1202

FIG. 20

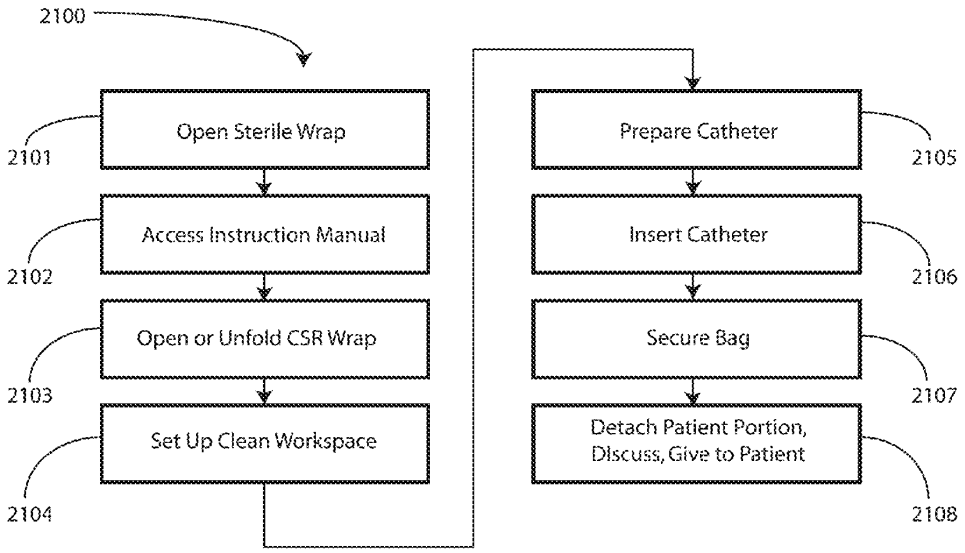
2100
Open Sterile Wrap
2101
Access Instruction Manual
2102
Open or Unfold CSR Wrap
2103
Set Up Clean Workspace
2104
Prepare Catheter
2105
Insert Catheter
2106
Secure Bag
2107
Detach Patient Portion, Discuss, Give to Patient
2108

FIG. 21

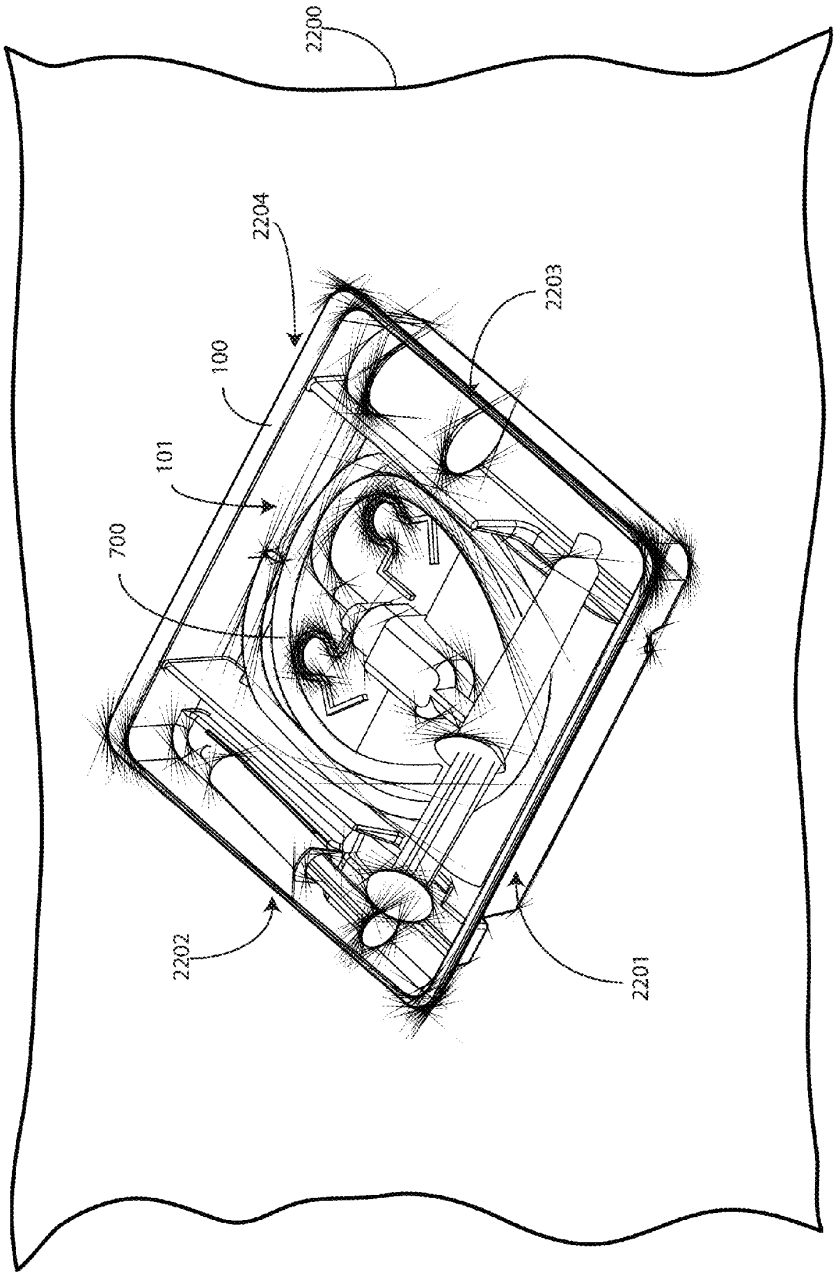

FIG. 22

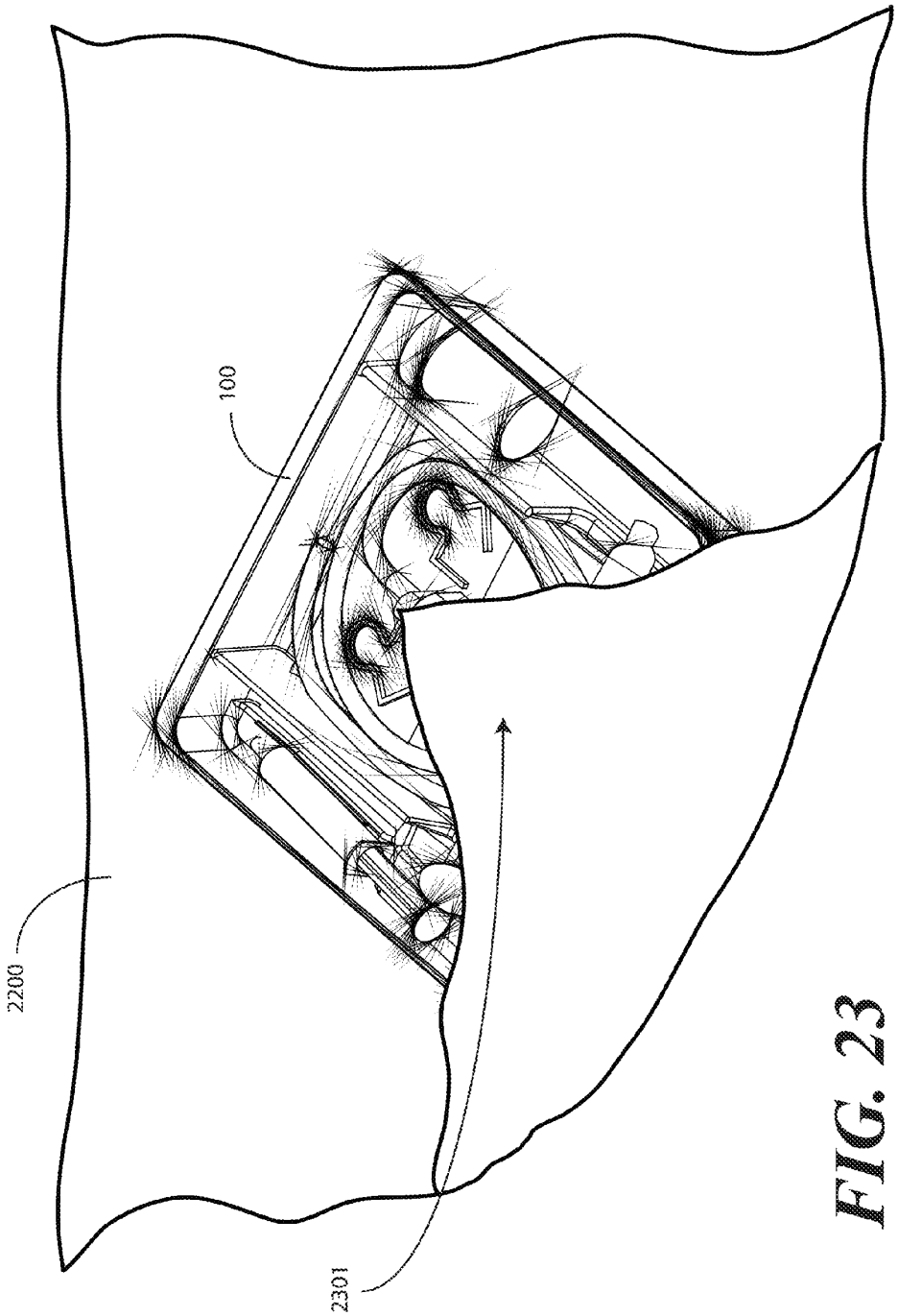

FIG. 23

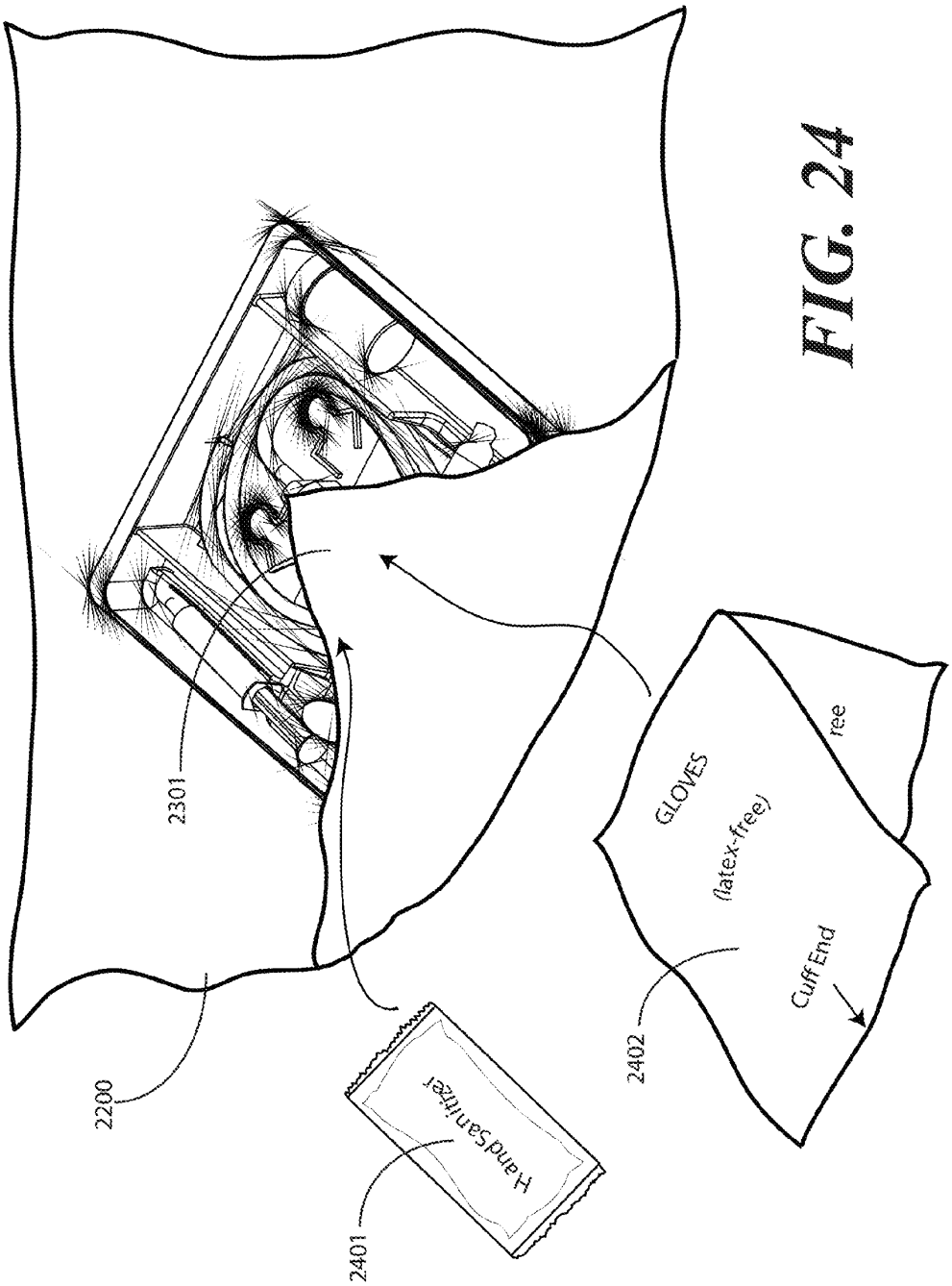
2200
2301
2401
Hand Sanitizer
2402
GLOVES
(latex-free)
Cuff End
ree

FIG. 24

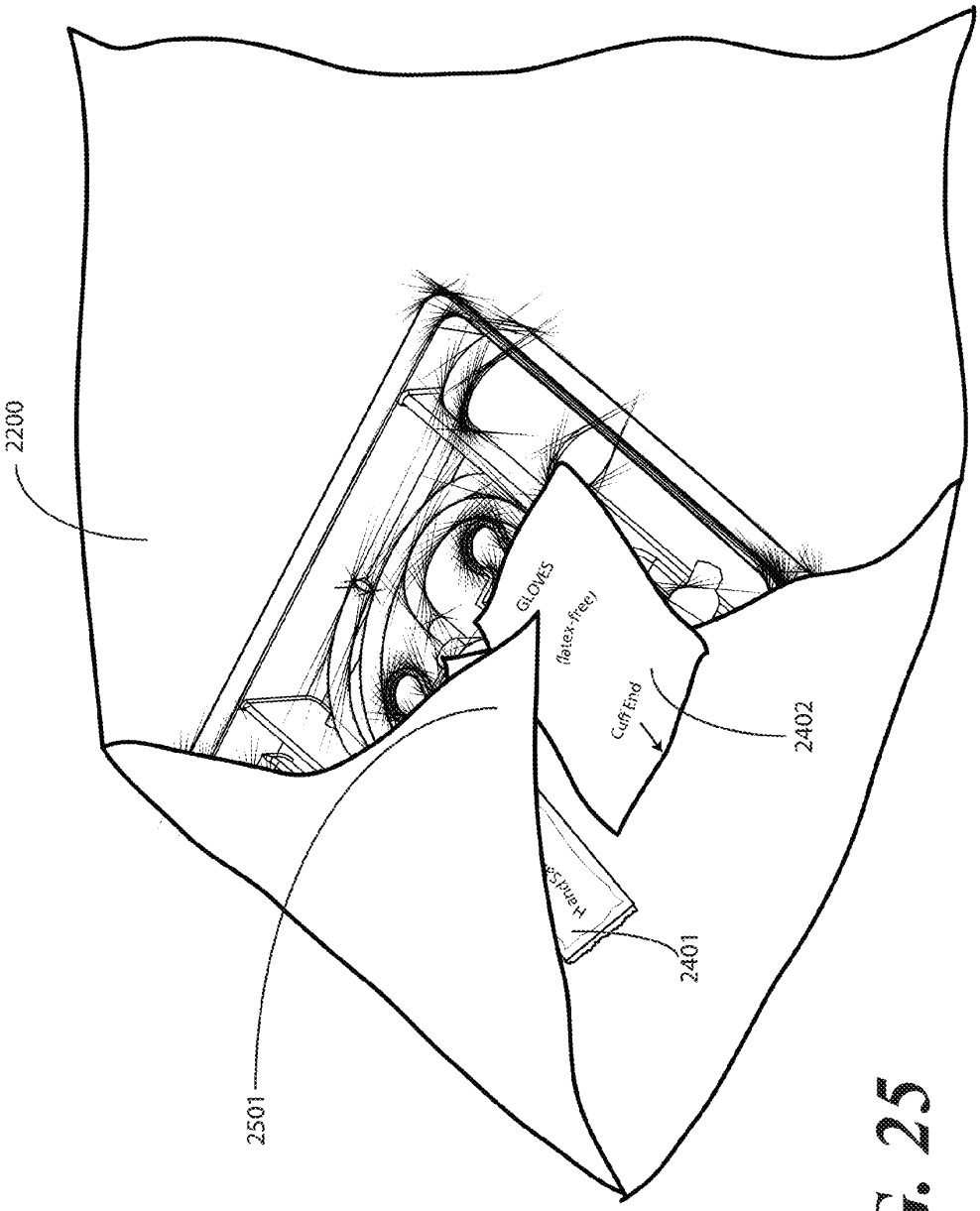

FIG. 25

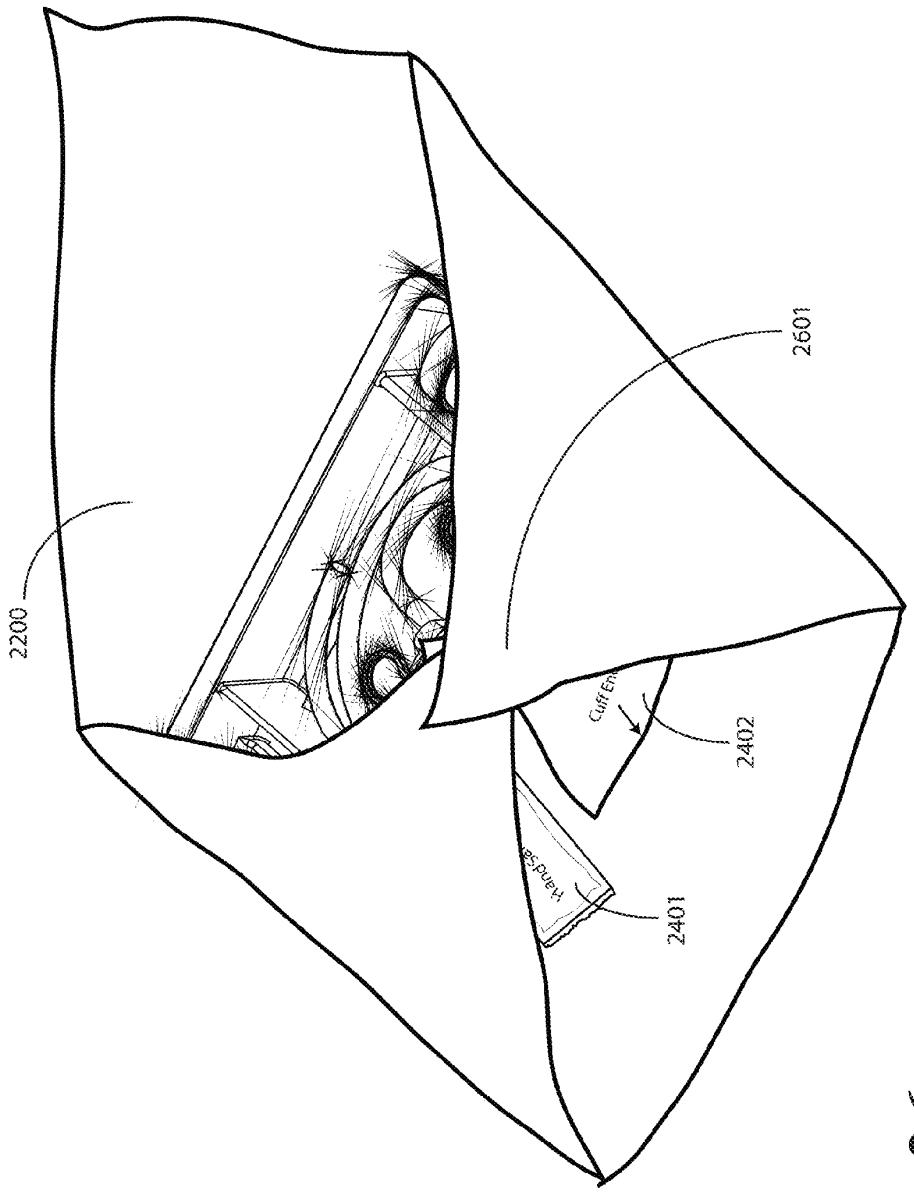

FIG. 26

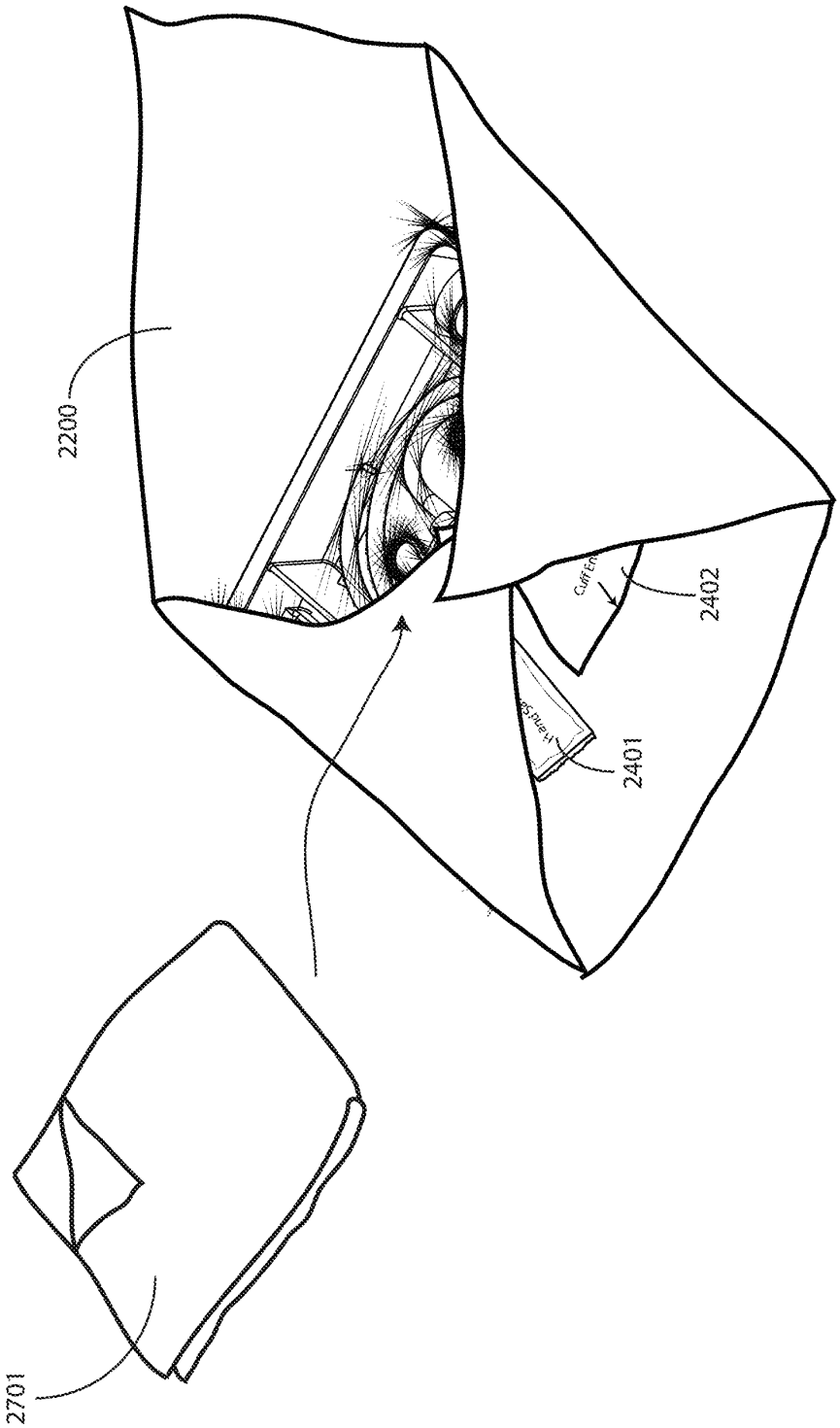

FIG. 27

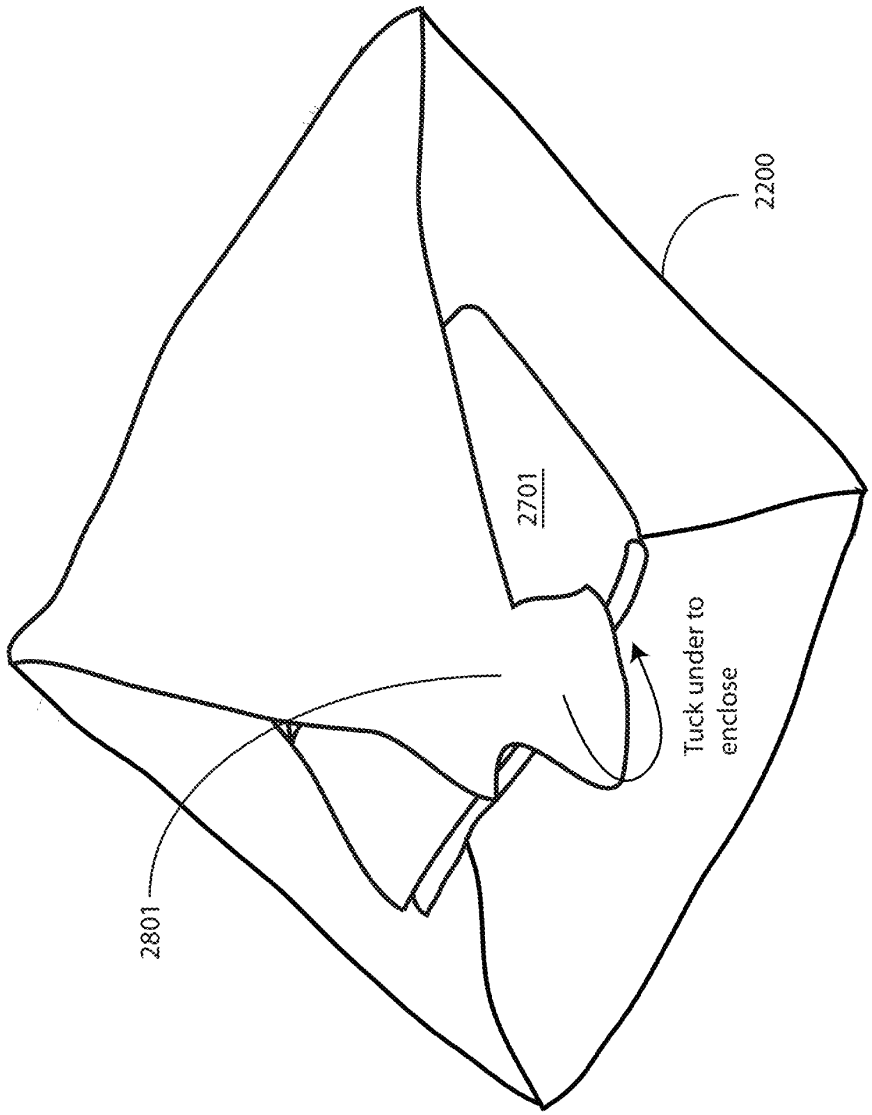

FIG. 28

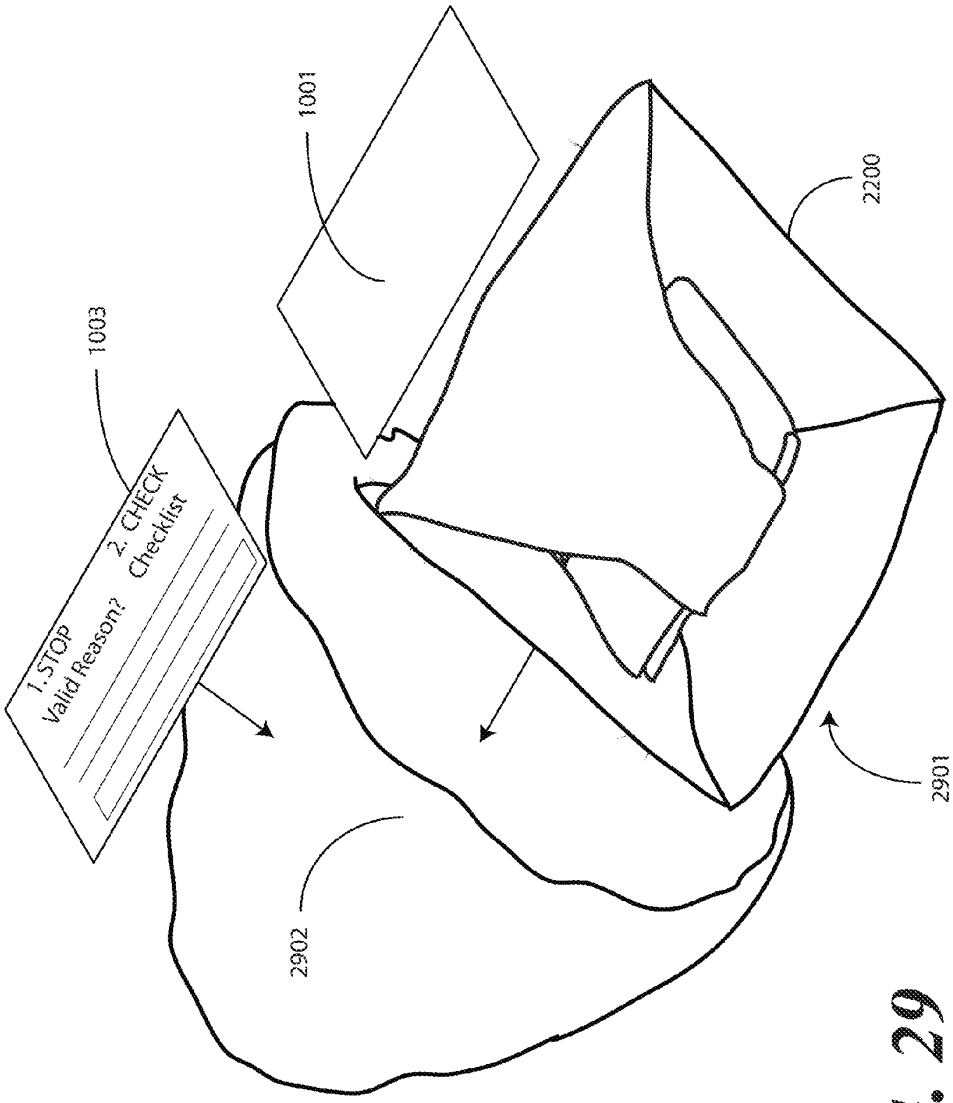
1003
1. STOP
Valid Reason?
2. CHECK
Checklist
1001
2902
2200
2901

FIG. 29

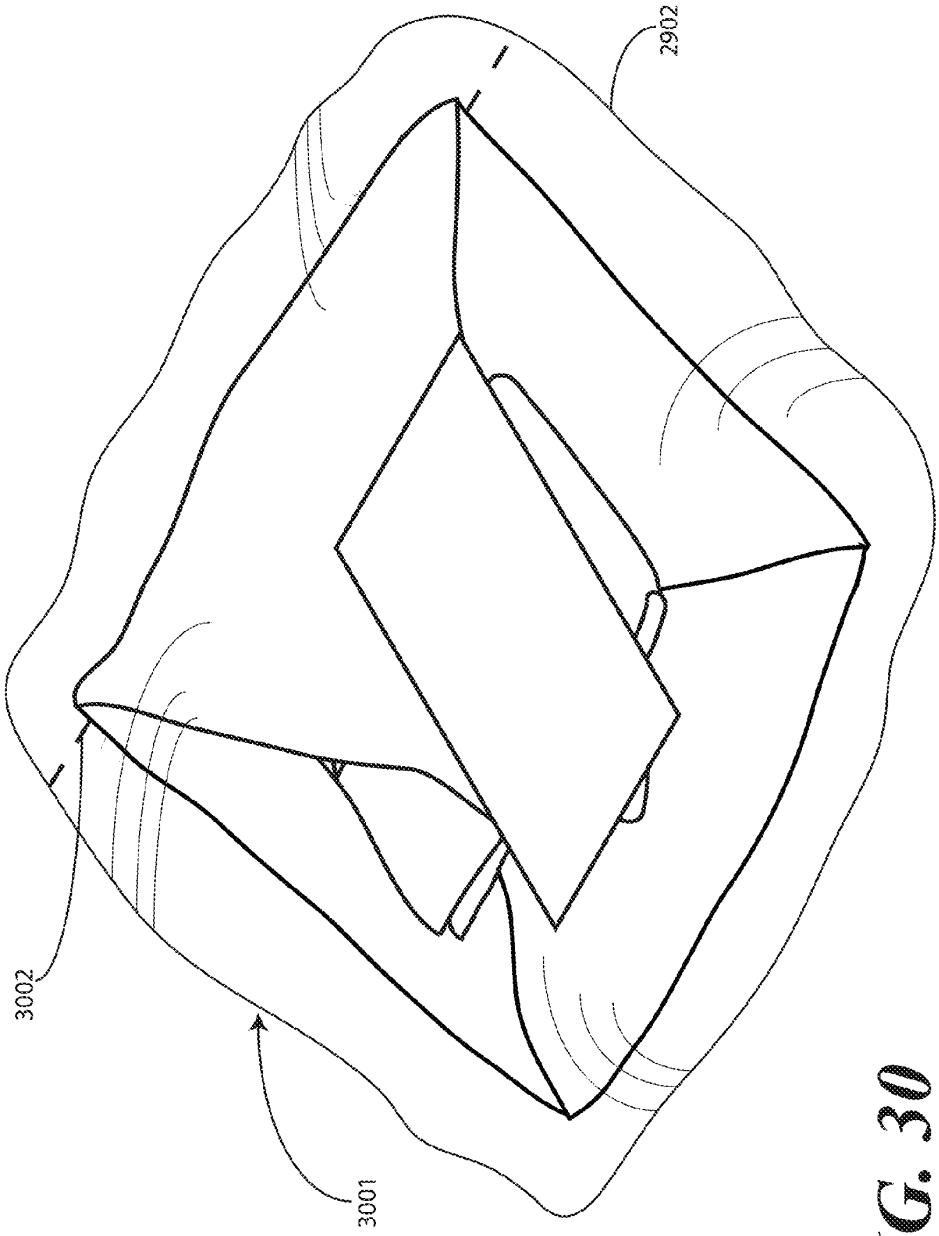

FIG. 30

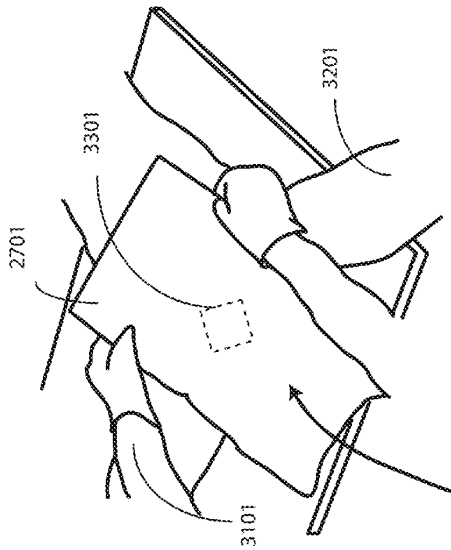

FIG. 33

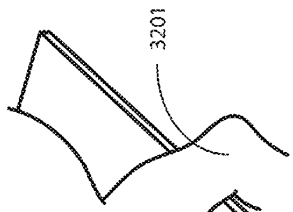

FIG. 32

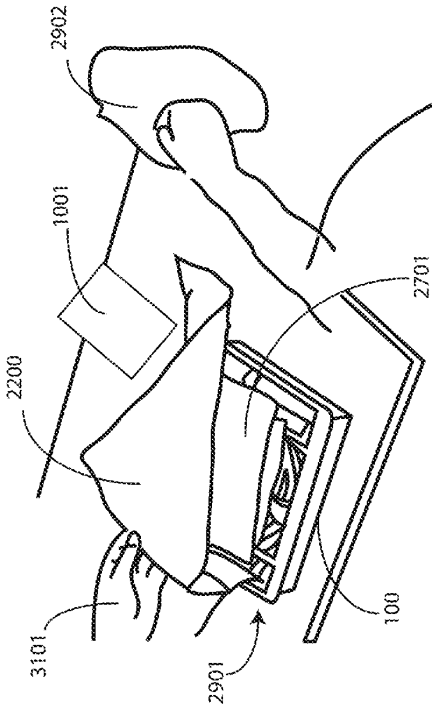

FIG. 31

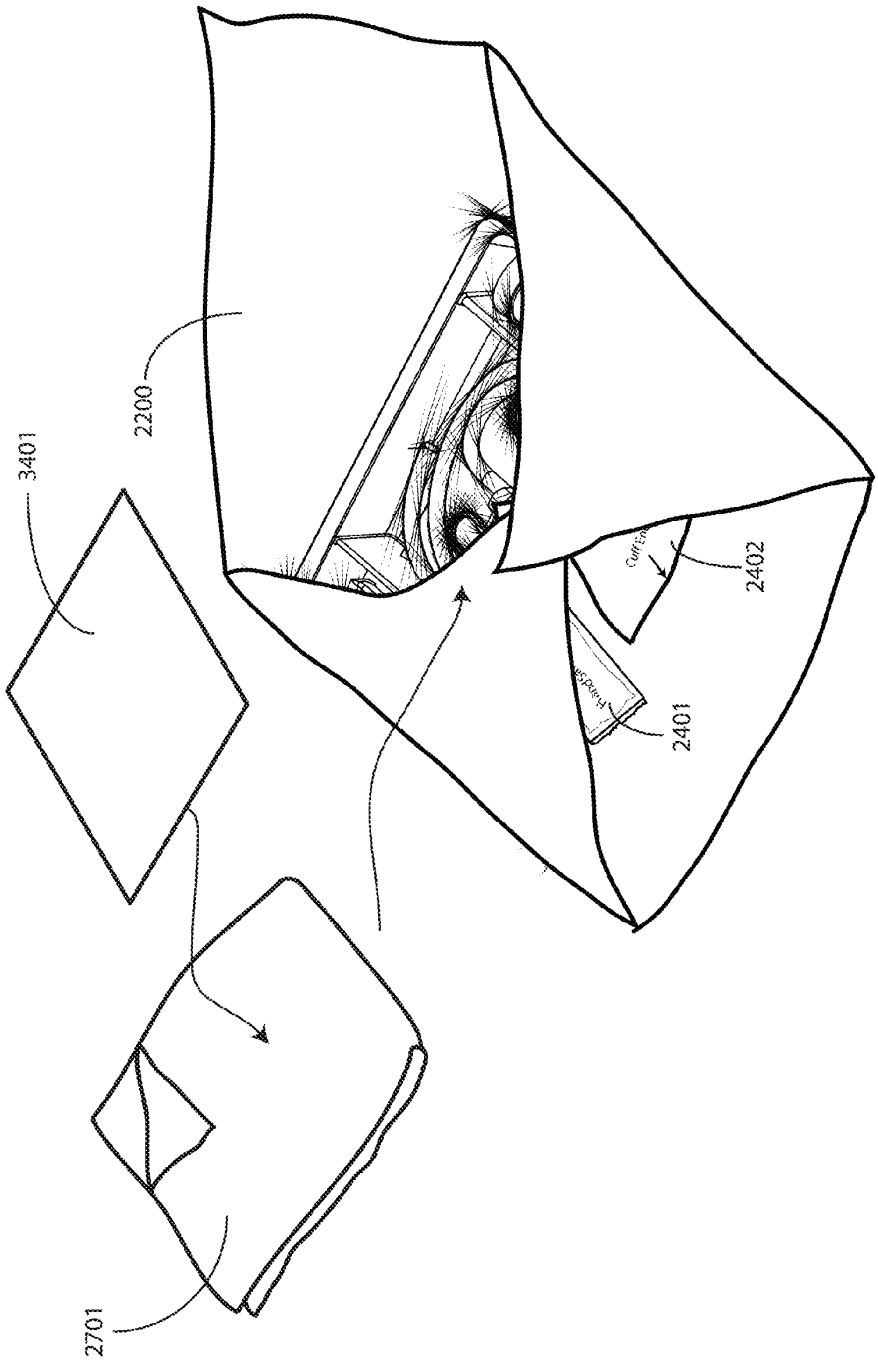

FIG. 34

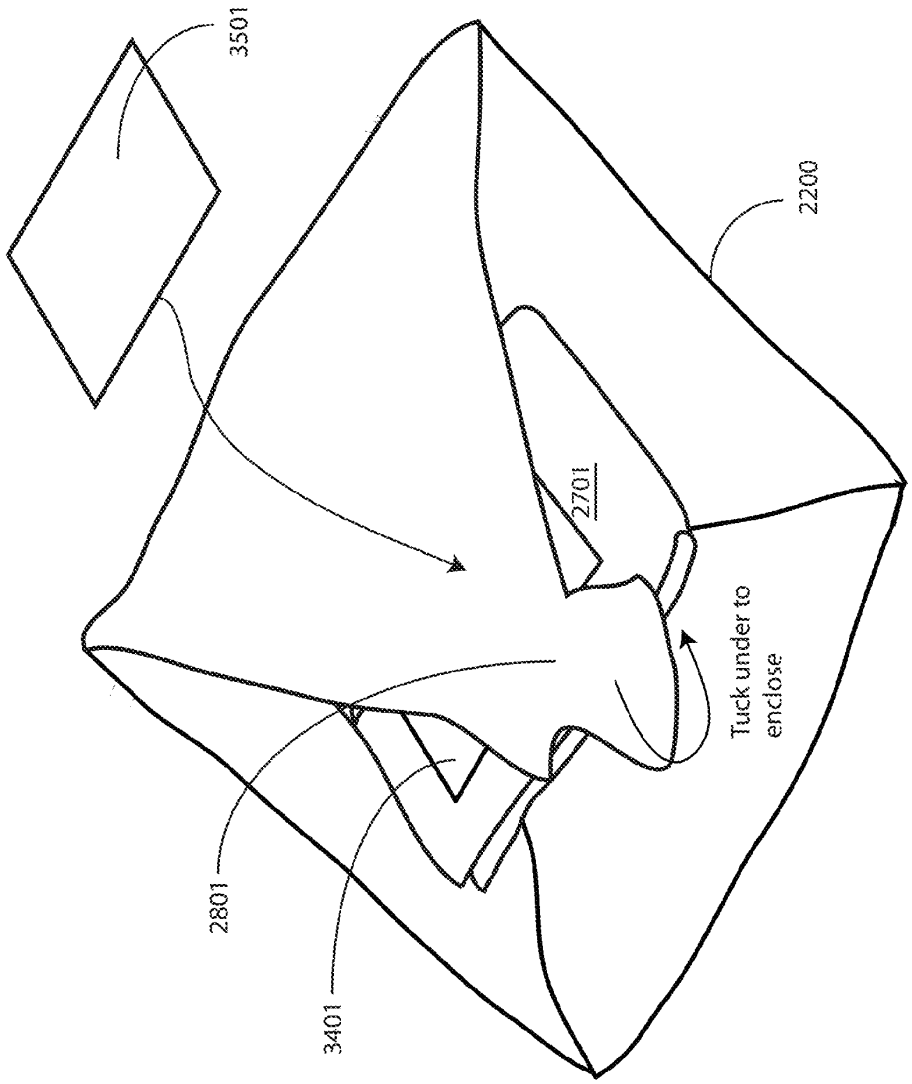

FIG. 35

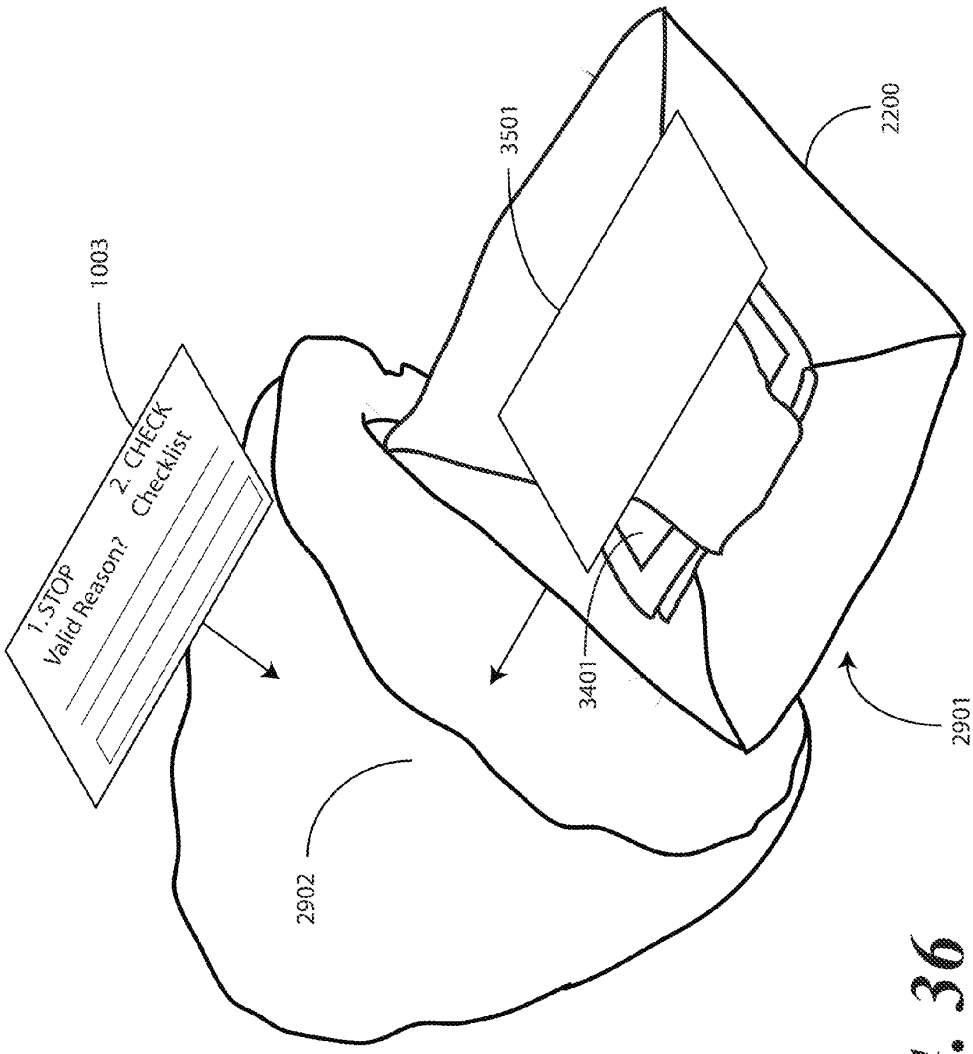
1. STOP
Valid Reason?
2. CHECK
Checklist
1003
2902
3401
3501
2200
2901

FIG. 36

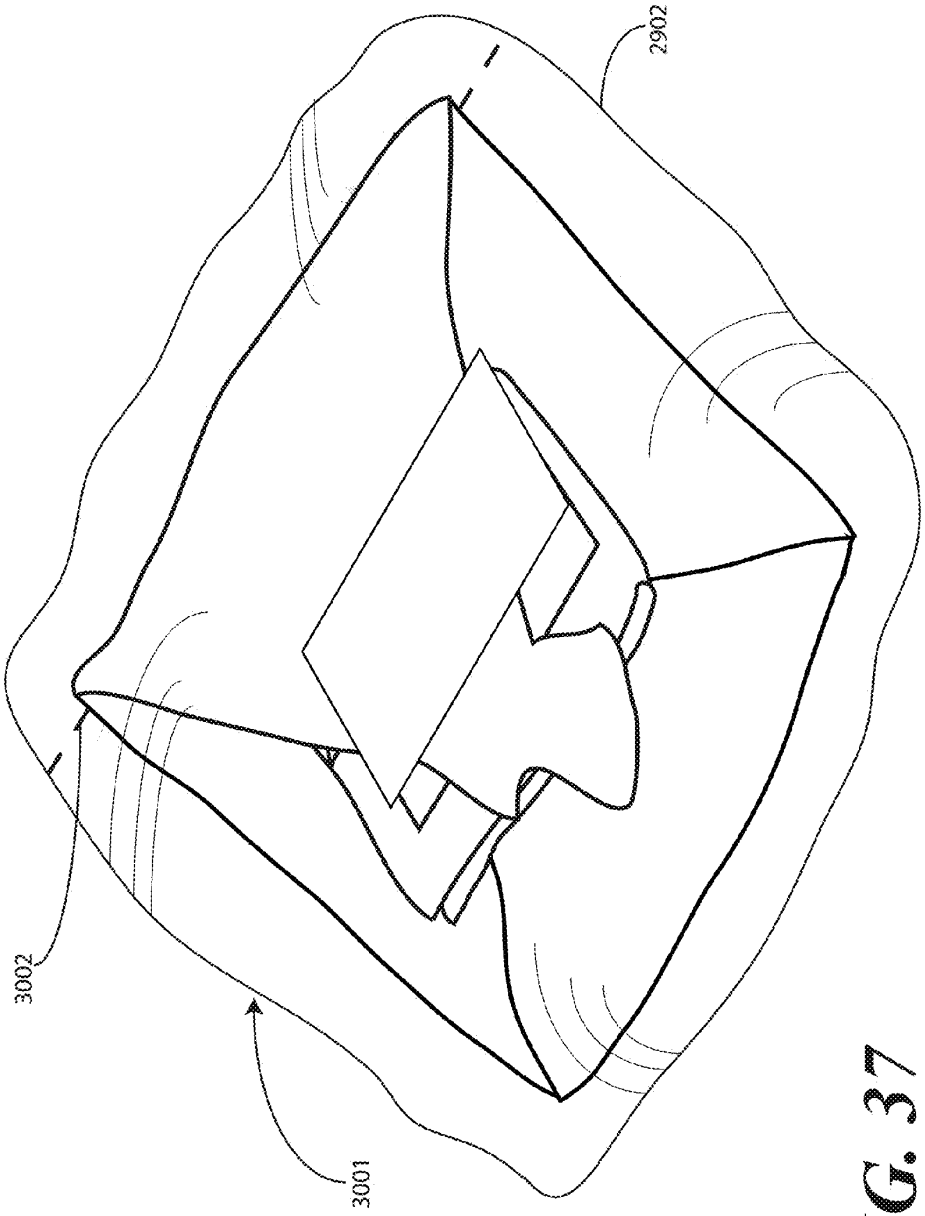

FIG. 37

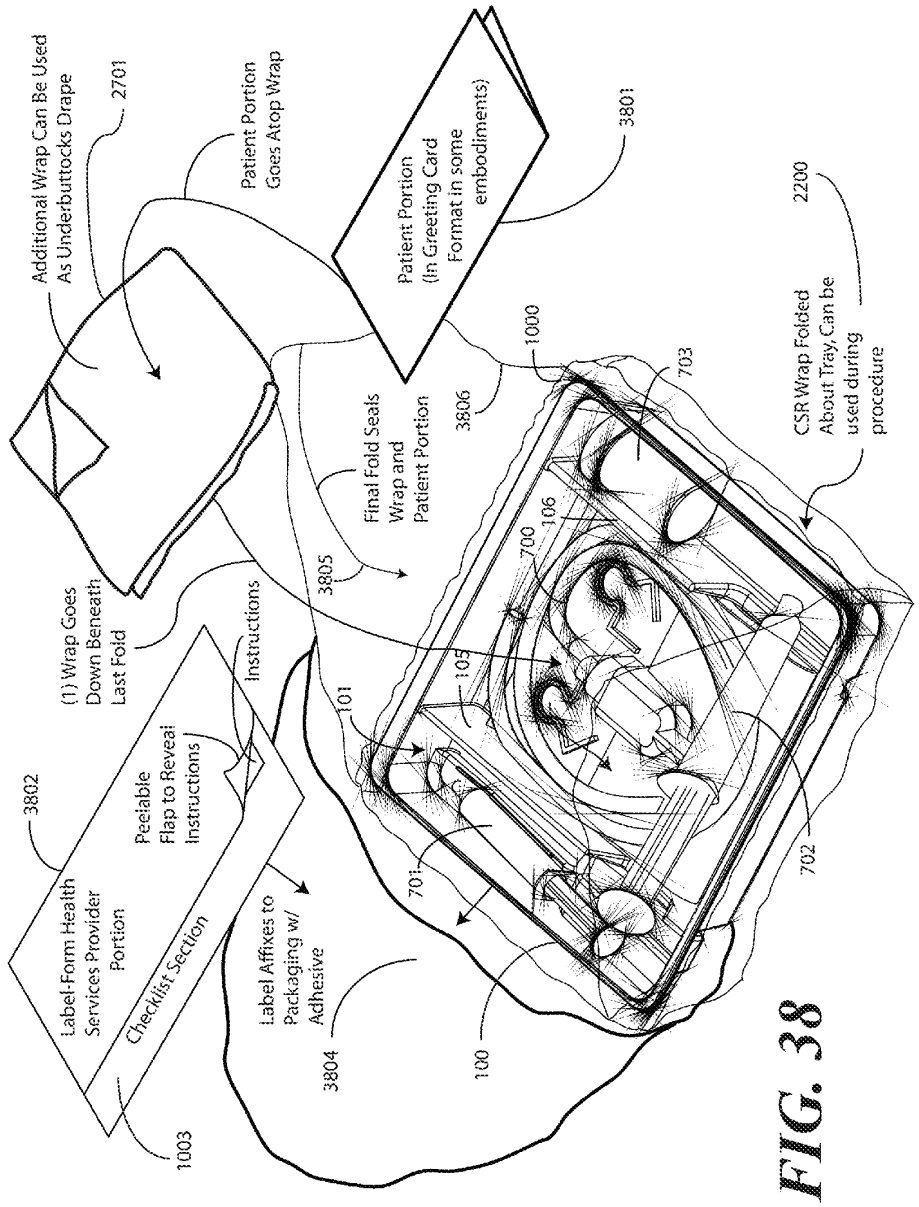

FIG. 38

Bard Exhibit 1004.0588

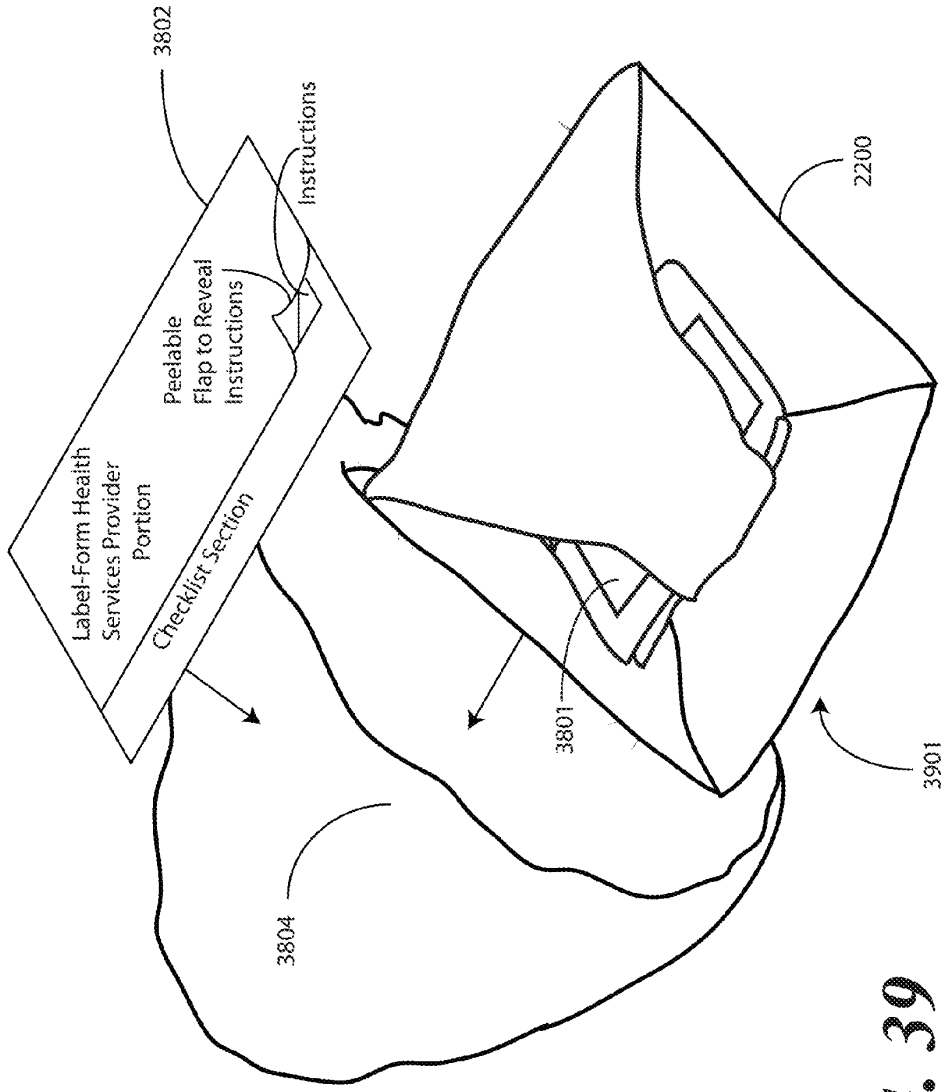
3802
Instructions
Peelable
Flap to Reveal
Instructions
Label-Form Health
Services Provider
Portion
Checklist Section
2200
3801
3901
3804

FIG. 39

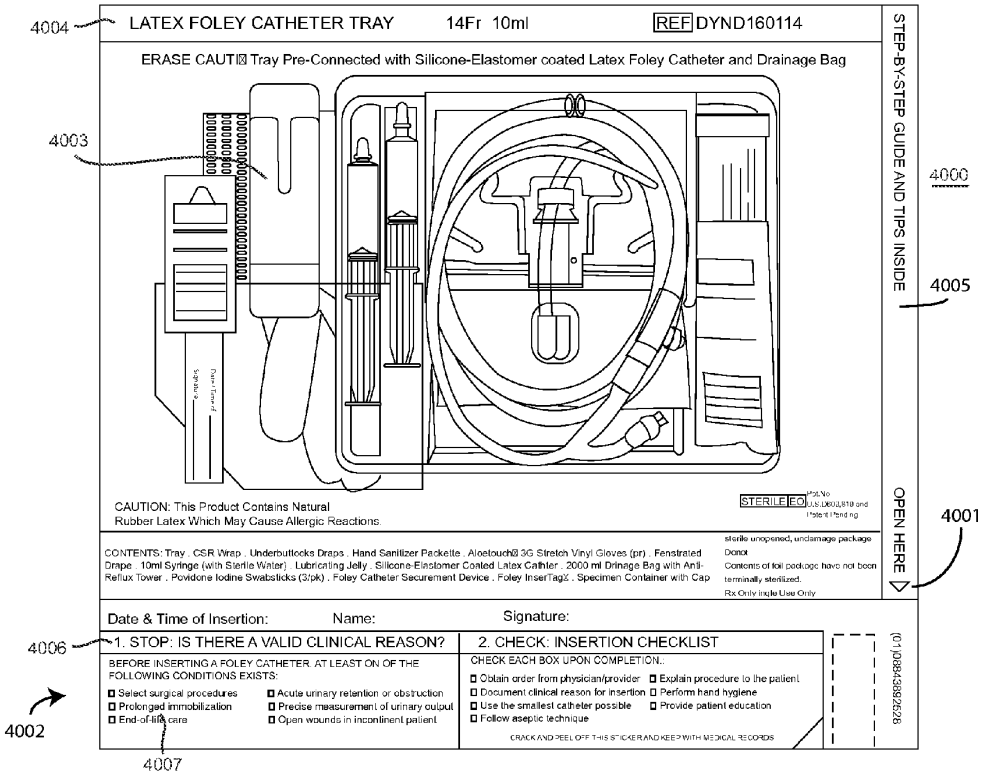
4004
LATEX FOLEY CATHETER TRAY
14Fr 10ml
REF DYND160114
ERASE CAUTI® Tray Pre-Connected with Silicone-Elastomer coated Latex Foley Catheter and Drainage Bag
4003
4000
4005
STEP-BY-STEP GUIDE AND TIPS INSIDE
CAUTION: This Product Contains Natural Rubber Latex Which May Cause Allergic Reactions.
STERILE EO
4001
OPEN HERE
CONTENTS: Tray . CSR Wrap . Underbuttocks Drape . Hand Sanitizer Packette . Aloetouch® 3G Stretch Vinyl Gloves (pr) . Fenestrated Drape . 10ml Syringe (with Sterile Water) . Lubricating Jelly . Silicone-Elastomer Coated Latex Cathter . 2000 ml Drinage Bag with Anti-Reflux Tower . Povidone Iodine Swabsticks (3/pk) . Foley Catheter Securement Device . Foley InserTag2 . Specimen Container with Cap
sterile unopened, undamage package
Donot
Contents of foil package have not been terminally sterilized.
Rx Only Inpte Use Only
Date & Time of Insertion:
Name:
Signature:
4006
1. STOP: IS THERE A VALID CLINICAL REASON?
2. CHECK: INSERTION CHECKLIST
BEFORE INSERTING A FOLEY CATHETER, AT LEAST ON OF THE FOLLOWING CONDITIONS EXISTS:
Select surgical procedures
Prolonged immobilization
End-of-life care
Acute urinary retention or obstruction
Precise measurement of urinary output
Open wounds in incontinent patient
CHECK EACH BOX UPON COMPLETION:
Obtain order from physician/provider
Document clinical reason for insertion
Use the smallest catheter possible
Follow aseptic technique
Explain procedure to the patient
Perform hand hygiene
Provide patient education
CRACK AND PEEL OFF THIS STICKER AND KEEP WITH MEDICAL RECORDS
(01)08843892626
4002
4007

FIG. 40

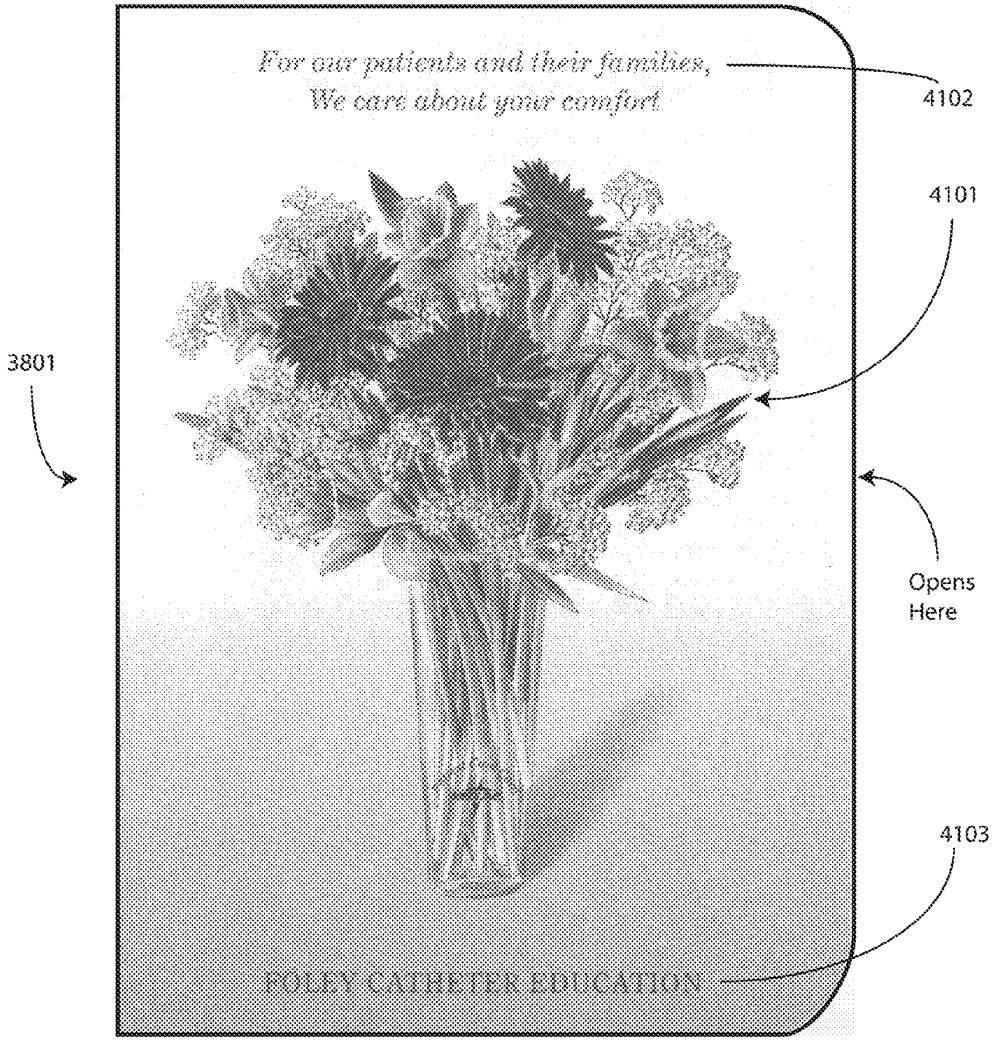
For our patients and their families,
We care about your comfort.
4102
4101
3801
Opens
Here
4103
FOLEY CATHETER EDUCATION

FIG. 41

CATHETER TRAY, PACKAGING SYSTEM, INSTRUCTION INSERT, AND ASSOCIATED METHODS

CROSS REFERENCE TO PRIOR APPLICATIONS

This application is a continuation application claiming priority to Ser. No. 13/860,902, filed Apr. 11, 2013, which is a divisional application from Ser. No. 13/155,026, filed Jun. 7, 2011, which claims priority and benefit under 35 U.S.C. §119(e) from U.S. Provisional Application Ser. No. 61/352,140, filed Jun. 7, 2010; Ser. No. 61/352,155, filed Jun. 7, 2010; Ser. No. 61/428,944, filed Dec. 31, 2010; and Ser. No. 61/437,796, filed Jan. 31, 2011, each of which is incorporated herein by reference. Moreover, Ser. No. 13/155,026 is further a continuation in part of: Ser. No. 12/495,148, filed Jun. 30, 2009; Ser. No. 12/647,515, filed Dec. 27, 2009; Ser. No. 13/153,265, filed Jun. 3, 2011; and Ser. No. 13/153,300, filed Jun. 3, 2011. As the present application claims priority to Ser. No. 13/155,026, the present application also, by law, claims priority to each of Ser. No. 12/495,148, Ser. No. 12/647,515, Ser. No. 13/153,265, and Ser. No. 13/153,300 through its priority claim to Ser. No. 13/155,026.

This application is related to commonly assigned U.S. Pat. No. 7,624,869 to Primer, which is incorporated herein by reference. This application is related to commonly assigned U.S. patent application Ser. No. 12/004,796, filed Dec. 21, 2007, which is incorporated herein by reference.

BACKGROUND

Technical Field

This invention relates generally to storage containers for medical devices, and more particularly to a storage container for a long, flexible medical implement, such as a catheter, and related medical devices, as well as an instruction manual included therewith.

Background Art

Medical devices, including surgical instruments, supplies, and so forth, are generally shipped from manufacturer to medical services provider in sterile packaging. For example, a scalpel may be shipped to a surgeon in a plastic, vacuum-sealed, sterile package. Similarly, bandages may be shipped in paper, plastic, or paper composite sterile wrappers. When the medical services provider is ready to use the medical supply, the sterile package is removed. The medical services provider then uses the object in accordance with the procedure being performed.

While conventional packaging works well for objects having a generally unchanging form factor, special considerations have to be taken into consideration for some medical supplies. By way of example, catheter assemblies and other flexible equipment is generally shipped in a coiled configuration. Once the sterile packaging is removed, the catheter must be uncoiled prior to use. Care must be taken in shipping, unwrapping, and using the catheter. For instance, if a catheter is inadvertently bent, kinked, or otherwise damaged, it may no longer be suitable for use. Compounding this issue, catheters are available in a variety of lengths ranging from 100 centimeters to over 250 centimeters.

Traditional catheters are packaged, for example, in individual packaging. The catheter and card are then sealed in a sterile plastic wrap. These catheters are prone to damage in shipment, storage, and when being unpacked, as the card and wrap provide little physical protection.

Some manufacturers have started shipping catheters and other similar devices in flat plastic trays. For example, U.S. Pat. No. 6,068,121 to McGlinch teaches one such tray. The tray has several specifically contoured loops such that one universal tray will accommodate several different sized catheters. Such packaging presents a problem, however, in that large amounts of storage space are taken with a universal tray, especially when a relatively short catheter is shipped therein. Additionally, when in use, these trays occupy large amounts of a medical service provider's sterile workspace or table, leaving little room for related components, such as lubricants, fluid bags, and so forth.

There is thus a need for an improved container for flexible medical devices or catheters that facilitates more effective and simpler deployment of the device during a procedure.

BRIEF DESCRIPTION OF THE DRAWINGS

The accompanying figures, where like reference numerals refer to identical or functionally similar elements throughout the separate views and which together with the detailed description below are incorporated in and form part of the specification, serve to further illustrate various embodiments and to explain various principles and advantages all in accordance with the present invention.

FIG. **1** illustrates a top, front, right perspective view of one embodiment of a tray for a catheter or similar assembly in accordance with embodiments of the invention.

FIG. **2** illustrates a top, front, left perspective view of one embodiment of a tray for a catheter or similar assembly in accordance with embodiments of the invention.

FIG. **3** illustrates a top plan view of one embodiment of a tray for a catheter or similar assembly in accordance with embodiments of the invention.

FIG. **4** illustrates a front elevation view of one embodiment of a tray for a catheter or similar assembly in accordance with embodiments of the invention.

FIG. **5** illustrates a cut-away, left elevation view of one embodiment of a tray for a catheter or similar assembly in accordance with embodiments of the invention.

FIG. **6** illustrates a bottom plan view of one embodiment of a tray for a catheter or similar assembly in accordance with embodiments of the invention.

FIG. **7** illustrates a top, front, right perspective view of one embodiment of a tray for a catheter or similar assembly, with a catheter and corresponding procedural devices disposed therein, in accordance with embodiments of the invention.

FIG. **8** illustrates a top plan view of one embodiment of a tray for a catheter or similar assembly, with a catheter and corresponding procedural devices disposed therein, in accordance with embodiments of the invention.

FIG. **9** illustrates a transparent, front elevation view of one embodiment of a tray for a catheter or similar assembly, with a catheter and corresponding procedural devices disposed therein, in accordance with embodiments of the invention.

FIG. **10** illustrates a perspective view of one embodiment of a tray for a catheter or similar assembly, with a catheter and corresponding procedural devices disposed therein, along with instructions and packaging, in accordance with embodiments of the invention.

FIG. **11** illustrates a method of manufacturing one embodiment of a tray for a catheter or similar assembly, with a catheter and corresponding procedural devices disposed therein, in accordance with embodiments of the invention.

FIG. **12** illustrates one embodiment of printed instructions in accordance with embodiments of the invention.

FIG. **13** illustrates one embodiment of printed instructions in accordance with embodiments of the invention.

FIGS. **14-19** illustrate exemplary panels of printed instructions in accordance with embodiments of the invention.

FIG. **20** illustrates a physical configuration of printed instructions in accordance with one embodiment of the invention.

FIG. **21** illustrates a method in accordance with embodiments of the invention.

FIGS. **22-30** illustrate various stages of a method of enclosing a medical procedure kit configured in accordance with embodiments of the invention.

FIGS. **31-33** illustrate various stages of a method of deploying a medical procedure kit configured in accordance with embodiments of the invention.

FIGS. **34-37** illustrate various stages of an alternative method of enclosing a medical procedure kit configured in accordance with embodiments of the invention.

FIGS. **38-39** illustrate various stages of an alternative method of enclosing a medical procedure kit configured in accordance with embodiments of the invention.

FIG. **40** illustrates an alternate health care services provider portion of printed materials configured as an adhesive label with an opening flap in accordance with one embodiment of the invention.

FIG. **41** illustrates an alternative patient portion of printed instructions configured as a greeting card and having patient information therein, in accordance with one embodiment of the invention.

Skilled artisans will appreciate that elements in the figures are illustrated for simplicity and clarity and have not necessarily been drawn to scale. For example, the dimensions of some of the elements in the figures may be exaggerated relative to other elements to help to improve understanding of embodiments of the present invention.

DETAILED DESCRIPTION OF THE INVENTION

Embodiments of the invention are now described in detail. Referring to the drawings, like numbers indicate like parts throughout the views. As used in the description herein and throughout the claims, the following terms take the meanings explicitly associated herein, unless the context clearly dictates otherwise: the meaning of "a," "an," and "the" includes plural reference, the meaning of "in" includes "in" and "on." Relational terms such as first and second, top and bottom, and the like may be used solely to distinguish one entity or action from another entity or action without necessarily requiring or implying any actual such relationship or order between such entities or actions. Also, reference designators shown herein in parenthesis indicate components shown in a figure other than the one in discussion. For example, talking about a device (**10**) while discussing figure A would refer to an element, **10**, shown in figure other than figure A.

Embodiments of the present invention provide a medical procedure kit that includes medical products for performing a medical procedure. In one embodiment, the medical procedure kit is configured for a catheterization procedure. Such an embodiment will be used herein for illustration purposes. However, it will be clear to those of ordinary skill in the art having the benefit of this disclosure that embodiments of the invention are not so limited. Other medical procedure kits for performing other procedures could be substituted for the illustrative catheterization tray disclosed herein by substituting other medical implements for the catheterization implements. In the illustrative embodiment, a tray is configured to accommodate a medical device or assembly. In an illustrative embodiment, the medical device is a coiled device, such as a catheter or catheter assembly. In addition to accommodating the coiled medical device, embodiments of the present invention are also configured to contain devices and materials intended for use with the coiled medical device.

Using a catheter assembly as an example, when a catheter assembly is inserted into a patient, sterile water may be used to inflate the catheter. Additionally, the catheter may be coated in a lubricating jelly prior to insertion into the patient. Fluids and other samples may then be monitored and obtained from the patient via the catheter. Embodiments of the present invention provide a single container configured to accommodate not only the catheter assembly and fluid bag, but also syringes containing sterile water or lubricants. Further, the tray can accommodate a sterile specimen jar for capturing samples taken from the patient via the catheter.

In addition to simply accommodating these corresponding medical devices, in one embodiment the tray is configured to provide the medical services provider with mnemonic devices instructing them in which order to use each device. For example, a compartment containing syringes, in one embodiment, includes an inclined, stair-stepped bottom member to present the plungers of each syringe at an easy to reach angle and at different heights based upon order of use.

Another advantage of embodiments of the present invention is that compartments have multi-purpose functionality. For example, in one embodiment, a container configured to accommodate a syringe having lubricating jelly disposed therein is also configured to be used as a lubricating jelly applicator. A medical services provider first dispenses the lubricating jelly into the syringe compartment. The medical services provider then passes the catheter from another compartment through an opening in a barrier separating the compartments into the lubricating jelly. As such, the tray not only serves as a shipping and storage container for an assembly of devices used with a catheter procedure, but also as an application device to assist a medical services provider in using those products together.

Turning now to FIGS. **1-6**, illustrated therein are views of one embodiment of a tray **100** configured to accommodate a catheter assembly in accordance with embodiments of the invention. FIG. **1** illustrates a top, front right perspective view of the tray **100**. FIG. **2** illustrates a top, front, left perspective view of the tray **100**. FIG. **3** illustrates a top plan view of the tray **100**. FIG. **4** illustrates a front elevation view of the tray **100**. FIG. **5** illustrates a cut-away, left elevation view of one embodiment of a tray **100**. Likewise, FIG. **6** illustrates a bottom plan view of the tray **100**. For simplicity of discussion, these figures will be referred to collectively with like reference numerals referring to identical or functionally similar elements throughout the separate views.

The tray **100**, in one embodiment, is formed by a contoured surface **104** that defines the various features and compartments of the tray **100**. The contoured surface **104** of the tray **100** can be manufactured in various ways. For example, in one embodiment, the tray **100** can be thermally formed on a mold from a soft thermoplastic, such as styrene or polystyrene. In another embodiment, the tray **100** can be injection molded. In another embodiment, the tray can be poured on a mold using a quick setting plastic, epoxy, or

resin. Other methods of manufacture will be obvious to those of ordinary skill in the art having the benefit of this disclosure.

Exemplary dimensions for one embodiment of the tray **100** are as follows: The length **112** can be between nine and twelve inches, such as ten inches. One illustrative length **112** may be 10.380 inches. Similarly, the width **113** can be between eight and eleven inches, such as nine inches. One illustrative width **113** is 9.250 inches. The height **114** can be between one and three inches. One illustrative height **114** is 1.750 inches.

In one embodiment, the tray **100** includes three main compartments: a first compartment **101**, a second compartment **102**, and a third compartment **103**. The first compartment **101** is separated from the second compartment **102** by a first barrier **105**. The second compartment **102** is separated from the third compartment **103** by a second barrier **106**.

In one embodiment, the compartments are open from the top of the tray **100**—the top being opposite the base members of the tray **100**—and are bounded on the bottom by a first base member **107**, a second base member **108**, and a third base member **109**. The compartments are bounded on the sides by a perimeter wall **110**. In the illustrative "open top" embodiment of FIG. **1**, the perimeter wall **110** ends in a horizontal flange **111** extending substantially orthogonally from the perimeter wall **110**. It will be clear to those of ordinary skill in the art having the benefit of this disclosure that embodiments other than that shown in FIG. **1** are possible without departing from the spirit and scope of the invention. For instance, the top of the tray **100** could have a hinged or snap-coupled lid that is opened or removed to reveal the compartments there beneath.

In one illustrative embodiment, the tray **100** is configured to hold or otherwise accommodate all of the necessary devices and materials to perform a catheter-based procedure on a patient. Said differently, the tray **100** is configured to hold not only the catheter assembly, but the medical devices corresponding to catheter use as well. Using one illustrative procedure as an example, the following devices will be used: a syringe holding sterile water, a syringe holding lubricating jelly or another equivalent lubricant, a catheter assembly, skin cleansing or preparation materials, and a specimen jar. The various compartments and features of the tray **100** shown in FIGS. **1-6** will be described for use with these devices. As will be described in more detail below, additional objects can be included with the tray, such as one or more towels, a drape to cover the patient, rubber gloves, hand sanitizing materials, swab sticks, a securement device, a Foley insert tag, a printed instruction pamphlet, and so forth. The syringe holding sterile water, syringe holding lubricating jelly, catheter assembly, and specimen jar are used for illustration purposes only, as it will be clear that other objects may be added to or substituted for these objects. Further, subsets of these objects may be used.

In one embodiment suitable for procedures using the syringe holding sterile water, syringe holding lubricating jelly, catheter assembly, and specimen jar, in one embodiment, the tray **100** is configured such that these objects are ordered in accordance with their use during the procedure. For example, in one embodiment the tray **100** includes a first compartment **101** for accommodating one or more syringes, a second compartment **102** for accommodating the catheter assembly, and a third compartment **103** for accommodating the specimen jar. These devices stowed in the various compartments will be illustrated and described with respect to FIGS. **7-10** below. The discussion of FIGS. **1-6** will include the features of the tray **100** that make the tray **100** suitable for accommodating these devices.

For example, in one embodiment the first compartment base member **107** includes a stair-stepped contour **115** suitable for accommodating a plurality of syringes at different heights. For example, a first step portion **116** of the stair-stepped contour **115** may be at a different height within the tray **100** than a second step portion **117** of the stair-stepped contour. In the illustrative embodiment of FIGS. **1-6**, the first step portion **116**—which is disposed farther from the first barrier **105** than the second step portion **117**—is shallower than the second step portion **117**. Said differently, the second step portion **117** is disposed at a greater depth within the tray **100** than the first step portion **116**.

The stair-stepped contour **115** can be used as mnemonic device when multiple syringes are stored within the first compartment **101**. For example, it may be intuitive that a syringe placed on a higher step portion may need to be used first. This intuition is further enforced when the higher step portion is disposed farther to the left in a left-to-right usage configuration. Thus, a user receives a mnemonic reminder to use a syringe disposed on the first step portion **116** prior to a syringe disposed on the second step portion **117**, as it is both higher and farther to the left.

Where syringes are stowed in the first compartment **101**, the first compartment base member **107** can further be configured for syringe ease of use. For example, in one embodiment the first compartment base member **107** is inclined relative to other compartment base members. In the illustrative embodiment of FIGS. **1-6**, the second compartment base member **108** and third compartment base member **109** are substantially coplanar with each other. Further, the second compartment base member **108** and third compartment base member **109** are generally flat in these views, although it will be clear to those of ordinary skill in the art having the benefit of this disclosure that contours could be incorporated into one or both of these base members.

In this illustrative embodiment, however, the first compartment base member **107** is configured to be inclined relative to one or both of the second compartment base member **108** and third compartment base member **109**. As such, the stair-stepped contour **115** forms a ramp upon which syringes may be placed so that the plunger of each syringe is predisposed to project upward and out of the tray **100**. Said differently, the stair-stepped contour **115** is configured such that the first step portion **116** and the second step portion **117** are disposed in a non-parallel orientation relative to the second compartment base member **108**. This configuration makes it easier for a medical services provider to grasp the syringes and remove them from the tray **100**.

The first compartment base member **107** may include other features suitable for accommodating one or more syringes as well. In one embodiment, one or both of the first step portion **116** and second step portion **117** include recesses **118**,**119** for accommodating a syringe flange. These recesses **118**,**119** generally function to prevent the syringes from sliding lengthwise within the first compartment **101**. Similarly, in one embodiment one or both of the first step portion **116** and the second step portion **117** include protrusions **120** that help to prevent the syringes from sliding laterally within the first compartment **101**.

In one embodiment, one or both of the first barrier **105** and the second barrier **106** include openings disposed therein. In the illustrative embodiment shown in FIGS. **1-6**, the first barrier **105** includes a first opening **121** between the first compartment **101** and the second compartment **102**. Simi-

larly, the second barrier **106** includes a second opening **122** between the second compartment **102** and the third compartment **103**. Each of these openings has an opening depth associated therewith. Similarly, each opening has an opening width associated therewith. In the illustrative embodiment of FIGS. **1-6**, the first opening **121** is bounded by a first opening base member **129** and two inclined first opening side members **127**,**128**, while the second opening **122** is bounded by a second opening base member **131**, an inclined second opening side member **130**, and the perimeter wall **110**.

While the opening depths can be the same, in one embodiment the opening depths are different. For example, in the illustrative embodiments of FIGS. **1-6**, the first opening **121** has a first opening depth **123** that is less than the second opening depth **124** of the second opening **122**. Similarly, in one embodiment the opening widths are different. For example, in the illustrative embodiments of FIGS. **1-6**, the first opening **121** has a first opening width **125** that is less than the second opening width **126** of the second opening **122**. Such a disparity in opening depths and widths, as well as the inclusion of inclined opening side members, provides an advantage in some applications.

For instance, in many catheter procedures a pair of syringes—such as syringes having a one-half inch diameter—fits easily into the first compartment **101** when the tray **100** is made with the illustrative dimensions set forth above. However, some procedures require one or more of the syringes to be larger. For example, some syringes are larger in diameter. These larger syringes are capable of nesting within the first opening **121** and second opening **122**. The inclined opening side members prevent the syringe from moving lengthwise, while the disparate opening heights present the plunger of the syringe to the medical services provider for easy removal from the tray **100**.

The stair-stepped contour **115**, working in tandem with the first opening **121**, gives the tray additional advantages over prior art catheter containers. For instance, when the first compartment **101** has a first compartment base member **107** configured with a stair-stepped contour **115**, the first compartment **101** can be used as a lubricant applicator for the catheter.

Specifically, the medical services provider may dispense the lubricating jelly along the second step portion **117**. As the second step portion **117** is lower in the tray **100** than the first step portion **116**, the second step portion **117** serves as a channel in which the lubricating jelly may spread. A medical services provider may then pass the catheter through the first opening **121**, through the channel formed by the second step portion **117**, i.e., along the second step portion **117** through the dispensed lubricating jelly, and out the top of the tray **100** to the patient. This feature of the tray **100** greatly eases the application of lubricating jelly to the catheter when compared to prior art solutions. In one embodiment, the tray **100** is packaged with printed instructions showing the medical services provider how to apply lubricating jelly in this manner. The printed instructions will be described in more detail below with respect to FIGS. **12-23**.

It will be clear to those of ordinary skill in the art having the benefit of this disclosure that alternative methods may be used to apply the lubricating jelly as well. For example, in another embodiment, the lubricating jelly is dispensed directly onto the catheter tubing while the tubing is in or above the first compartment **101**. Excess lubricant falling from the catheter tubing can then collect, and be retained, in the second step portion **117**.

This particular feature highlights another advantage of the "compartmentalized" structure of various embodiments of the invention. As the tray **100** includes multiple compartments, various tasks associated with a catheterization procedure can be completed while keeping the catheter within the tray **100**. The ability to keep the catheter in the tray **100** reduces the risk that the catheter or corresponding devices will be contaminated with bacteria or microbes on other objects within the procedure room. For example, when the first compartment **101** is used to apply lubricating jelly to the catheter, the lubricating jelly can be applied while the catheter is contained within the tray **100**, thereby reducing the risk that the catheter will become contaminated. This correspondingly reduces the risk of infection for the patient receiving the catheter.

Prior art systems, for example such as those in which the catheterization procedure components are shipped in separate containers, may contribute to substandard techniques in that the catheter can become contaminated when moving it from its shipping container. Consequently, the patient can be at an elevated risk of infection as the catheter is moved from one tray to another. Embodiments of the present invention solve this problem by providing a single level tray **100** with compartments. Further, in one embodiment the first compartment **101** includes the first opening **121** so the catheter can stay in place during and after lubrication. By having easy access to the components disposed in the single level tray **100**, the medical services provider can more easily prepare and use the components within the tray **100**. This helps to minimize the risk of contaminating the patient or the sterile field during the procedure.

In one embodiment, the second step portion **117** is configured to be inclined at a shallower angle than the first step portion **116** in at least a portion opposite the recess **119** from the first opening **121**. When configured in such a fashion, the second step portion **117** includes a "cutdown" so that the catheter can stay within the channel both during and after lubrication.

Additionally, the catheter can be placed in both the first opening **121** and second opening **122** during lubrication. When positioned in this configuration, the second opening **122** helps to align the catheter with the first opening for easy passage through the lubrication channel formed by the second step portion **117**.

The tray **100** of FIGS. **1-6** includes additional advantages over prior art catheter packaging as well. For example, in one embodiment, instructions **132** or other graphical indicia can be printed, placed upon, or molded into the horizontal flange **111**. In one embodiment, compartment designations can be placed above each compartment to ensure the medical services provider uses the correct device or material at the correct time. In another embodiment, expiratory dates for materials or devices disposed within the tray **100** may be placed on the horizontal flange **111**. It will be obvious to those of ordinary skill in the art having the benefit of this disclosure that the invention is not so limited. Any number of various text or picture combinations can be printed on, placed upon, or molded into various parts of the tray. For instance, graphical indicia can be applied to the compartment base members in addition to the horizontal flange **111**. Note that the horizontal flanges, in one embodiment, can terminate in downwardly protruding vertical flanges for increased stability during the printing process.

Another advantage of the tray **100** is that its compartmentalized configuration helps to reduce the risk of contaminating a patient or compromising the sterile nature of the components stored in the tray **100**. Since both the

catheter assembly and medical devices corresponding to catheter use are stored within the same tray **100**, the risk of cross-contamination between sterile work areas and non-sterile spaces is minimized. Further, by having the catheter assembly and the devices corresponding to catheter use stowed in a one-level tray rather than a multi-level, stacked configuration, the medical services provider can more easily prepare and use the catheter and corresponding devices disposed within the tray **100**.

Turning now to FIGS. **7-9**, illustrated therein is a tray having a catheter assembly **700**, syringes **701**,**702**, and a specimen container **703** stored therein as a catheter packaging system in accordance with one embodiment of the invention. As with FIGS. **1-6**, FIGS. **7-9** will be referred to collectively with like reference numerals referring to identical or functionally similar elements throughout the separate views. FIG. **7** illustrates a top, front, right perspective view of the catheter packaging system, while FIG. **8** illustrates a top plan view of the catheter packaging system. FIG. **9** illustrates a transparent, front elevation view of the catheter packaging system.

The illustrative catheter packaging system of FIGS. **7-9** includes a tray **100** having a first compartment **101**, a second compartment **102**, and a third compartment **103**. In this illustrative embodiment, the first compartment **101** is configured to accommodate syringes **701**,**702**. The second compartment **102** is configured to accommodate a coiled medical device, such as catheter assembly **700**. The third compartment **103** is configured to accommodate the specimen container **703**. The third compartment **103** can accommodate other materials as well, including skin sanitizers and cleansing liquids, solutions, or gels. As mentioned above, additional devices corresponding to catheter use, including towels, drapes, rubber gloves, and so forth, can be disposed in the tray **100** as well. As an illustration of this flexibility, a towel **704** is disposed beneath the catheter assembly **700**.

As noted above, in one embodiment the flange **111** can include instructions **770** or other graphical indicia. As also noted above, the implements disposed in the various compartments **101**,**102**,**103** can have implements therein arranged in accordance with use. In one embodiment, shown illustratively in FIG. **7**, the instructions **770** can be coordinated with this arrangement, indicating that components disposed in the first compartment **101** should be used first, components disposed in the second compartment **102** should be used next, and so forth. To assist the user in understanding workflow, arrows **771** or other directional elements can be included on the flange **111** as well.

As illustrated in FIGS. **1-6**, each compartment of the tray **100** includes a compartment base member. Further, each compartment is separated by a barrier having an opening therein. A first barrier **105** having a first opening **121** therein separates the first compartment **101** from the second compartment **102**. Similarly, a second barrier **106** having a second opening **122** therein separates the second compartment **102** from the third compartment.

Syringes **701**,**702** are disposed in the first compartment, with one syringe **701** being supported at a different elevation within the tray than the other syringe **702**. The different elevations can be relative to each syringe **701**,**702**, or to other components of the tray **100**, such as the second compartment base member **108**. Said differently, one syringe **701** is supported by the first compartment base member **107** at a shallower depth within the tray **100** than the depth of the second compartment base member **108**. Further, where the first compartment base member **107** is inclined relative to other base members, one or both syringes **701**,**702** will be supported in a non-parallel configuration relative to the second compartment base member **108**. This is most readily seen in FIG. **9**.

As noted above, some medical procedures will call for more materials than can be accommodated by a syringe capable of fitting within the first compartment **101**. For such procedures, the tray **100** can be packed with larger syringes. A large syringe (not shown) can be supported laterally within the tray **100** when it is placed across the tray **100** such that it lies within both the first opening **121** of the first barrier **105** and the second opening **122** of the second barrier **106**. Such a syringe will pass across the top of the catheter assembly **700**, but will be held in place by the side members of each opening.

Turning now to FIG. **10**, illustrated therein is an exploded view of the tray **100** having the catheter assembly **700**, a pair of syringes **701**,**702**, and a specimen container **703** disposed therein. While only a specimen container **703** is shown as being disposed in the third compartment, note that additional items could also be included within the third compartment, including swab sticks. Other devices could also be inserted into the tray **100** in various compartments as well. For example, in one embodiment, a catheter securement device, and a Foley insertion tag, which is a dated and/or time stamped label that is secured to the catheter tubing once the catheter is inserted, can be inserted into the second compartment **102**. Also, note that the pair of syringes **701**,**702** can be configured as shown in FIG. **10**, or alternatively can be both inserted in the first compartment, as described above. In the configuration of FIG. **10**, rather than having both syringes **701**,**702** disposed within the first compartment **101**, one syringe **702** is disposed laterally in the first opening **121** and the second opening **122** of the first barrier **105** and second barrier **106**, respectively. This configuration is illustrative only.

Once the necessary components are disposed within the tray **100**, the tray can be sealed with a wrap **1000** to keep the internal components sterile. The wrap **1000** can be any of a number of types of material. In one embodiment, the wrap **1000** comprises a Central Sterile Reprocessing (CSR) wrap that is used widely by medical professionals in hospitals, ambulatory surgical centers, and the like during medical procedures. While a CSR wrap is one example of a wrap that can be used, it will be clear to those of ordinary skill in the art that other wraps, such as plastic, cotton, linen, paper, or combinations thereof, can be substituted without departing from the spirit and scope of the invention.

Using a CSR wrap as an illustrative example, in one embodiment as indicated in FIG. **10**, the CSR wrap **1000** is folded about the tray **100** for sealing, and can be correspondingly unfolded to reveal the tray **100**. Once unfolded, the CSR wrap **1000** can then be used in the catheter insertion process. For example, an unfolded CSR wrap **1000** can be used to provide a sterile field in which the tray **100** sits for unloading and subsequent use. This process will be explained in more detail in the discussion of FIGS. **22-30** below.

Printed instructions **1001** can then be attached to, disposed upon, or disposed within the tray **100**. In one embodiment, the printed instructions **1001** include a health care services portion and a patient portion, as will be shown in FIGS. **12-13** below. The health care services portion can include instructions telling the health care services provider, for example, how to set up a sterile or otherwise clean work environment, how to prepare the catheter assembly **700** disposed within the tray, how to use the other devices within the tray, how to insert the catheter, how to secure the

drainage bag to the catheter, how to empty the drainage bag, how to obtain a urine sample, and so forth. The instructions can include pictures or illustrations showing visually how the various steps should be done as well.

The patient portion can include helpful suggestions or instructions for the patient. The patient portion can be detachably coupled to the health care services portion, such as by a perforated line that is easily torn to separate the patient portion from the health care services portion. Examples of suggestions or instructions that may be included in the patient portion include information on what a catheter is, what the patient should understand about the catheter, how to reduce the chance of getting an infection, information about infections commonly associated with catheters, symptoms of infections commonly associated with catheters, and suggestions for home use of the catheter assembly **700**. In one embodiment, the health care services portion may include an instruction for the health care services provider to detach the patient portion from the health care services portion and instructions to discuss the patient portion with the patient.

The health care services portion can tell the medical services provider how to perform a standard catheterization procedure. For instance, in one embodiment, the tray **100** is equipped with an adhesive label that can be used to identify the patient or specimen in the specimen container **703**. Further, a label can be included to mark or otherwise identify the material in the fluid bag attached to the catheter. Such labels can include pre-printed fields, such as date, time and name. Further the printed instructions **1001** can notify the medical services provider that the devices disposed within the tray **100** are ordered corresponding to use during the catheterization procedure.

In another embodiment, the printed instructions **1001** can inform the medical services provider of special instructions. For instance, in one embodiment the printed instructions **1001** can inform the medical services provider not to leave a catheter in a patient for more than forty-eight hours without a physician's approval. Where the printed instructions **1001** include such information, the labels included in the tray **100** may have pre-printed fields for the time of insertion that can be filled in by the medical services provider performing the catheterization procedure.

Once the printed instructions **1001** have been affixed to, or placed with, within, or atop the tray **100**, the assembly can be sealed in a sterile wrap **1002** such as a thermally sealed bag. The thermally sealed bag can optionally include a preformed opening. For example, in one embodiment, the opening can include one or more tabs that a health care services provider is instructed to pull to open the bag. Inclusion of a sterile wrap **1002** not only keeps the contents within the bag sterile, but also allows the instructions to be included with the tray assembly, yet outside the CSR wrap **1000**.

In one embodiment the printed instructions **1001** are disposed atop the CSR wrap **1000** such that the health care services portion of the printed instructions **1001** is disposed on the top of the printed instructions **1001**, with the patient portion being disposed adjacent to the CSR wrap **1000**, such as when the printed instructions **1001** are configured as an accordion-style folded instruction pamphlet. While the printed instructions **1001** of one embodiment are configured as a folded, printed, separate article disposed atop the CSR wrap **1000**, it will be clear to those of ordinary skill in the art having the benefit of this disclosure that the invention is not so limited. For example, in one embodiment the sterile wrap **1002** can be optional. In one embodiment, rather than including separate printed instructions **1001**, the instructions for use can be printed on the CSR wrap **1000** as well.

Additional instruction materials may be included with the completed assembly as well. For example, in one embodiment an adhesive instruction tag **1003** can be affixed to the sterile wrap **1002**. In another embodiment the instruction tag may be adhered to an outer packaging, that encloses the tray, the sterile wrap material or both. For example, in one embodiment the instruction tag **1003** can include information regarding whether a catheter procedure is needed. Text **1004** such as "Is there a valid clinical reason?" may be included under an instruction to "Stop" that includes the following information:

Before inserting the Foley catheter, at least one of the following conditions should exist:
Acute urinary retention or obstruction
Precise measurement of urinary output needed
Select surgical procedures
Open sacral or perineal wounds in incontinent patient
Prolonged immobilization
End of life care

Further, checklist text **1005** may be included, such as "Checklist for Foley Catheter Insertion" included under the word "Check" that includes the following information:

Check Each Box Upon Completion:
Obtain order from physician/provider
Document clinical reason for insertion
Explain procedure to patient
Use smallest catheter possible
Perform hand hygiene
Follow aseptic technique

Additional information may also be included, such as a fillable form **1006** that provides fields for the date and time of insertion of the catheter to be recorded, the name of the health care services provider, and the signature of the health care services provider. The above text **1004** for the instruction tag **1003** is illustrative only, and may be customized as desired by the manufacturer.

Turning now to FIG. **11**, illustrated therein is a method **1100** for manufacturing a packaged catheter assembly in accordance with embodiments of the invention. At step **1101**, the manufacturer provides a tray (**100**) having at least a first compartment (**101**) for accommodating one or more syringes (**701**,**702**) and a second compartment (**102**) for accommodating a flexible medical device, such as a catheter assembly (**700**). As noted above, in one embodiment the first compartment (**101**) will have a first compartment base member (**107**) having an inclined, stair-stepped contour (**115**). The first compartment (**101**) and second compartment (**102**) can be separated by a first barrier (**105**) having an opening (**121**) therein.

Once the tray (**100**) is procured, the manufacturer can dispose at least one syringe (**701**) in the first compartment (**101**) at step **1102**. Optionally, at step **1103**, the manufacturer may include additional components with the tray (**100**). For example, a catheter securement device, a Foley insert tag, or other complementary components may be included at this step **1103**.

In one embodiment, as determined at decision **1105**, a second syringe (**702**) will be disposed in the first compartment (**101**) at step **1106**. In another embodiment, the second syringe (**702**) will be disposed laterally within the first opening (**121**) and, where present, a second opening (**122**) at step **1107**.

At step **1104**, the manufacturer will place the catheter assembly (**700**) in the second compartment (**102**). Other components may be disposed in the tray (**100**) as well,

including a specimen container (**703**) that is disposed in a third compartment (**103**) at step **1108**. Further, other devices may be included, such as towels, drapes, printed instructions, one or more antiseptic packets, and so forth. These other devices can be disposed in various compartments within the tray (**100**).

At step **1109**, the tray (**100**) is sealed. This can be accomplished by folding a CSR wrap about the tray (**100**). In such an embodiment, the CSR wrap can be used during the catheter insertion procedure as well. At optional step **1110**, the manufacturer can enclose printed instructions (**1001**). In one embodiment, the printed instructions (**1001**) will direct a user to discharge contents of at least one syringe into the first compartment (**101**) and to pass at least a portion of the catheter assembly (**700**) through the opening and into the contents to lubricate the catheter.

At step **1111**, the manufacturer can place a sterile wrap about the tray (**100**) and the printed instructions (**1001**), where included. A sticker or other sealing device can be applied that indicates the contents to be sterile as well. At step **1112**, the completed assembly can be shipped to a medical services provider.

Turning now to FIGS. **22-30**, illustrated therein is a method of packaging a catheter assembly and corresponding tray in accordance with embodiments of the invention. FIGS. **22-30** illustrate one exemplary method graphically, which each figure representing one or more steps of the method, as the illustrations serve to better explain these steps than would a flow chart or other diagram. While FIGS. **22-30** illustrate one method of packaging a tray and catheter assembly, it will be clear to those of ordinary skill in the art having the benefit of this disclosure that other methods can be used as well. Further, in creating this article of manufacture, i.e., the packaged catheter assembly, the steps of FIGS. **22-30** may be either manual or automated. A person can execute the steps to create the article of manufacture in one embodiment. Alternatively, industrial machinery, equipment, and robotics can be designed and programmed to execute the steps with the assistance of one or more processors and executable instructions stored in memory.

Beginning with FIG. **22**, in this step, a tray **100** is provided. The tray includes at least one compartment, such as the first compartment **101** that is configured for receiving the catheter assembly **700**. As described above, the tray **100** can include additional compartments as well, such as those for receiving syringes, specimen jars, and so forth.

At this step, the catheter assembly **700** is placed within the first compartment **101** as previously described. The tray is then placed upon one or more layers of wrap material **2200**. In one embodiment, the wrap material **2200** can be CSR wrap. For example, in the illustrative embodiment of FIG. **22**, the wrap material **2200** comprises a white layer of CSR wrap measuring 24 inches square. As previously noted, other materials can be used as well, including plastic materials, cotton materials, paper materials, synthetic materials and so forth. The wrap material **2200** can be of different shapes and sizes as well.

While the tray **100** can be sealed with a simple layer of plastic adhered to the top of the tray **100**, providing the wrap material **2200** can be advantageous in many applications. For example, as will be explained below with respect to FIGS. **31-33**, when the wrap material **2200** is a medically usable material, such as CSR wrap, a medical services provider may unfold the wrap about the tray **100** to create a sterile field for the catheterization procedure. For this reason, one or more layers of wrap material **2200** are simply folded about the tray **100** in this illustrative embodiment.

Note that for reference and ease of explanation, the tray **100** will be described as having four sides: a first side **2201**, a second side **2202**, a third side **2203**, and a fourth side **2204**. As these sides will not be visible in every view, due to the folding of the wrap material **2200** about the tray **100**, they are initially noted here. Note that four sides are used because the illustrative tray **100** is rectangular in shape. Were the tray a triangle, there would be three sides. Were the tray ovular or circular, there would be an infinite number of sides.

Turning now to FIG. **22**, at this step a first portion **2301** of the one or more layers of wrap material **2200** is folded about a first side (**2201**) of the tray **100**. In this illustrative embodiment, the tray **100** is oriented at a rotation of approximately forty-five degrees relative to the one or more layers of wrap material **2200**, with both the wrap material **2200** and the tray **100** being rectangular in shape. As such, the first portion **2301** comprises a first corner of the wrap material **2200**. It will be clear to those of ordinary skill in the art having the benefit of this disclosure, however, that embodiments of the invention are not so limited. For example, the wrap material **2200** can be configured as a circle or oval. Executing the step shown in FIG. **22**, a first portion of that material could be folded about a first side of the tray **100** in similar fashion.

Turning to FIG. **23**, illustrated therein is an optional step that can be included in the method of packaging the catheter assembly. As noted above, in one embodiment the one or more layers of wrap material **2200** can be unfolded to create a sterile field about the tray **100**. A patient can be placed atop this sterile field for the catheterization procedure. Even if the surface below the wrap material **2200** is also sterile, the use of the wrap material **2200** as a foundation for the procedure further ensures that the sterile field will not be breached.

Turning now to FIG. **24**, to help ensure that the health care provider does not inadvertently breach the sterile field, in one embodiment a package of liquid hand sanitizer **2401** or other cleanser and/or a package of rubber gloves **2402** may be included. Alternatively, other medical implements such as alcohol wipes or other materials could be enclosed as well. In such an embodiment, upon opening the packaged catheter assembly, the health care services provider may—before ever touching the catheter assembly or tray contents—apply the liquid hand sanitizer **2401** to their hands and dawn rubber gloves. The inclusion of these accessories in the packaging eliminates the need for the health care services provider to have to leave the sterile field to wash their hands, obtain gloves, and so forth.

In the illustrative embodiment of FIG. **23**, the package of liquid hand sanitizer **2401** and package of rubber gloves **2402** are simply placed atop the first portion **2301** of the one or more layers of wrap material **2200**. As will be shown below, they will be held in place by other portions of the one or more layers of wrap material **2200** by way of subsequent folding steps. Other methods of holding them in place, including light adhesives or the design of pockets in the one or more layers of wrap material **2200** may also be used. The sanitizer **2401** and gloves **2402** are shown placed atop the first portion **2301**, but may be alternatively placed atop, and therefore outside of the sterile field, other layers of the wrap as well, (for example, **2501**, **2601**, **2801** or the like).

Turning now to FIG. **25**, at this step a second portion **2501** of the one or more layers of wrap material **2200** is folded about a second side (**2202**) of the tray **100**. Where the optional package of liquid hand sanitizer **2401** and package of rubber gloves **2402** are included, the second portion **2501** of the one or more layers of wrap material **2200** may be folded so as to cover or partially cover these items.

Turning now to FIG. **26**, at this step of the method a third portion **2601** of the one or more layers of wrap material **2200** is folded about a second side (**2203**) of the tray **100**. Where the optional package of liquid hand sanitizer **2401** and package of rubber gloves **2402** are included, the third portion **2601** of the one or more layers of wrap material **2200** may be folded so as to cover or partially cover these items.

Turning now to FIG. **27**, illustrated therein is another optional step of the method of packaging the catheter assembly and tray. In many catheterization procedures, a first layer of material will be placed under the patient, while a second layer of material is placed atop the patient. For such applications, the packaged catheter assembly can include an additional layer of wrap material **2701**. In the illustrative embodiment of FIG. **25**, the additional layer of wrap material **2701** comprises a folded layer of CSR wrap measuring 17 by 17.5 inches. The additional layer of wrap material **2701** in this illustrative embodiment is folded as a **4** by **2** matrix.

The one or more layers of wrap material **2200** and the additional layer of wrap material **2701** can be the same type of material. Alternatively, the one or more layers of wrap material **2200** and the additional layer of wrap material **2701** can be different. In one embodiment, for example, the additional layer of wrap material **2701** can be a fenestrated wrap with one or more pre-formed openings suited to the catheterization procedure.

In one embodiment, the additional layer of wrap material **2701** is configured to be visibly distinguishable from the one or more layers of wrap material **2200**. For example, in one embodiment, the additional layer of wrap material **2701** is a different color than the one or more layers of wrap material **2200**. The one or more layers of wrap material **2200** can be white, for instance, while the additional layer of wrap material **2701** can be light blue or light green. Other color combinations can equally be used.

As with the package of liquid hand sanitizer **2401** and package of rubber gloves **2402**, in one embodiment the additional layer of wrap material **2701** can be placed atop portions of the one or more layers of wrap material **2200**. In such an embodiment, the additional layer of wrap material **2701** can be held in place by way of subsequent folding steps, as the additional layer of wrap material **2701** is disposed along other folded portions of the one or more layers of wrap material **2200** prior to folding a fourth portion of the one or more layers of wrap material about the fourth side (**2204**) of the tray (**100**).

As will be shown below, medical procedure kits configured in accordance with embodiments of the invention can include printed instructions. The printed instructions can include a patient portion and a health care services provider portion. The health care services provider portion can include information such as how to use the medical procedure kit, what is included therein, checklists, and so forth. The patient portion can include helpful information for the patient, such as information about the procedure, questions to ask, and post procedure care suggestions. These two portions can be detachably coupled together. Alternatively, they can be separate.

In one embodiment of the invention where the health care services portion of the printed instructions are physically separated from the patient portion, it can be advantageous to stage the various portions at different locations within the assembled medical procedure kit. One advantage offered by embodiments of the invention is that the medical devices and implements can be staged within the kit in accordance with an order of use. Accordingly, the health care services provider can draw out each device in order of use.

Turning now briefly to FIG. **34**, illustrated therein is an alternate embodiment of the stage shown in FIG. **27**. The embodiment of FIG. **34** is well suited to situations in which the health care services portion is physically separated from the patient portion.

In FIG. **34**, another optional step corresponding to a method of packaging a medical procedure kit is shown. As with FIG. **27**, the medical procedure kit of FIG. **34** illustrates a packaged catheter assembly. Also as with FIG. **27**, the packaged catheter assembly can include an additional layer of material **2701**, which may be a patient drape, under-buttocks drape, or a combination thereof disposed within one or more layers of wrap material **2200**. As noted above, the additional layer of material **2701** can be configured to be visibly distinguishable from the one or more layers of wrap material **2200**. For example, in one embodiment, the additional layer of material **2701** is a different color than the one or more layers of wrap material **2200**.

The package of liquid hand sanitizer **2401** and package of rubber gloves **2402**, optionally the additional layer of material **2701**, and the separated health care services portion **3401** of the printed instructions can be placed atop portions of the one or more layers of wrap material **2200**. In such an embodiment, the package of liquid hand sanitizer **2401**, the rubber gloves **2402**, the additional layer of material **2701**, and the separated health care services portion **3401** can be held in place by way of subsequent folding steps, as they are disposed along other folded portions of the one or more layers of wrap material **2200** prior to folding a fourth portion of the one or more layers of wrap material about the fourth side (**2204**) of the tray (**100**). Accordingly, the health care services provider will be readily able to access these devices after unfolding a single fold of the one or more layers of wrap material **2200**.

Turning now to FIG. **28**, the tray (**100**) is enclosed in the one or more layers of wrap material **2200** by folding a fourth portion **2801** of the one or more layers of wrap material **2200** about a fourth side (**2204**) of the tray (**100**) and then tucking at least one of the first portion (**2301**), the second portion (**2501**), the third portion (**2601**), or the fourth portion **2801** of the one or more layers of wrap material **2200** beneath at least another of the first portion (**2301**), the second portion (**2501**), the third portion (**2601**), or the fourth portion **2801** of the layer of wrap material **2200**. In the illustrative embodiment of FIG. **28**, a part of the fourth portion **2801** is tucked beneath parts of each of the (**2301**), the second portion (**2501**), and the third portion (**2601**). This step of tucking encloses both the additional layer of wrap material **2701** and the package of liquid hand sanitizer (**2401**) and the package of gloves (**2402**) within the one or more layers of wrap material **2200**.

Turning briefly to FIG. **35**, illustrated therein is a variation of FIG. **28** in which the printed instructions include a health care services portion and a patient portion, wherein these portions are separate. In FIG. **35**, as with FIG. **28**, the tray (**100**) is enclosed in the one or more layers of wrap material **2200** by folding a fourth portion **2801** of the one or more layers of wrap material **2200** about a fourth side (**2204**) of the tray (**100**) and then tucking at least one of the first portion (**2301**), the second portion (**2501**), the third portion (**2601**), or the fourth portion **2801** of the one or more layers of wrap material **2200** beneath at least another of the first portion (**2301**), the second portion (**2501**), the third portion (**2601**), or the fourth portion **2801** of the layer of wrap material **2200**.

The separated health care services portion **3401** of the printed instructions is thus tucked within the fourth portion **2801**.

The separated patient portion **3501** is then placed atop the fourth portion **2801**. The health care services provider is therefore able to access the separated patient portion **3501** and deliver it to, and possibly discuss it with, a patient prior to unfolding the fourth portion **2801**. The step of tucking shown in FIG. **34** encloses each of the additional layer of wrap material **2701**, the separated health care services portion **3401**, the package of liquid hand sanitizer (**2401**) and the package of gloves (**2402**) within the one or more layers of wrap material **2200**, while leaving the patient portion **3501** outside the various folds of the one or more layers of wrap material **2200**.

Turning now to FIG. **29**, the packaged catheter assembly **2901** can be sealed in a bag **2902** as was described in FIG. **10**. Prior to depositing the packaged catheter assembly **2901** into the bag **2902**, optional printed instructions **1001** can be attached to or disposed upon the packaged catheter assembly **2901** as well. As with FIG. **10**, the printed instructions **1001** can include a health care services portion and a patient portion as shown in FIGS. **12-13**. The instructions can include pictures or illustrations showing visually how the various steps should be done as well.

Turning briefly to FIG. **36**, illustrated therein is an alternative to FIG. **29**, which is used when printed instructions including a health care services provider portion and a patient portion, each physically separate from the other, is included. In FIG. **36**, the packaged catheter assembly **2901** having the tucked-in, separated health care services portion **3401** of the printed instructions is sealed in a packaging material. The packaging material of FIG. **36** is illustratively shown as a bag **2902**.

Prior to depositing the packaged catheter assembly **2901** into the bag **2902**, the separated patient portion **3501** of the optional printed instructions can be attached to or disposed upon the packaged catheter assembly **2901** as described in FIG. **35**.

Once the printed instructions **1001** have been affixed to, or placed with or atop the packaged catheter assembly **2901**, as in either FIG. **29** or **36**, the assembly can be sealed in a sterile wrap such as a bag **2902**, which may be thermally or otherwise sealed. The completed assembly **3001** is shown in FIGS. **30** and **37**, where an outer packaging material is shown. In FIGS. **30** and **37**, the outer packaging material is a thermally sealed bag **2902**. It will be understood that this outer packaging is but one embodiment of the various packaging materials that can be used in accordance with embodiments of the invention. In FIGS. **30** and **37**, the thermally sealed bag **2902** optionally includes a preformed opening **3002**. For example, in one embodiment, the preformed opening **3002** can include one or more tabs that a health care services provider is instructed to pull to open the bag **2902**. Inclusion of a sterile wrap not only keeps the contents within the bag sterile, but also allows the printed instructions **1001** to be included with the tray assembly, yet outside the one or more layers of wrap material (**2200**).

Turning back to FIG. **29**, in one embodiment the printed instructions **1001** are disposed atop the one or more layers of wrap material **2200** such that the health care services portion of the printed instructions **1001** is disposed on the top of the printed instructions **1001**, with the patient portion being disposed adjacent to the one or more layers of wrap material **2200**. As with FIG. **10**, additional instruction materials may be included with the completed assembly as well. For example, in one embodiment an adhesive instruction tag **1003** can be affixed to the bag **2902**.

Turning now to FIGS. **38** and **39**, illustrated therein are steps of method of assembling yet another embodiment of medical procedure kit in accordance with embodiments of the invention. In FIGS. **38** and **39**, the printed instructions are physically separated into a patient portion **3801** and a health care services provider portion **3802**, as was the case in FIGS. **34-37**. However, unlike FIGS. **34-37**, the embodiment of FIGS. **38** and **39** has the health care services provider portion **3802** configured as an adhesive label with the checklist **1003** forming an extension thereof. Further, as will be shown in more detail in FIG. **40**, the health care services provider portion **3802** has a picture of the contents of the medical procedure kit on the top, and has a peelable flap **3803** that may be opened to reveal instructions and other indicia therein.

Another difference in the embodiment of FIGS. **38** and **39** involves the patient portion **3801**. While some embodiments provide a patient portion that is very straight-forward, informational, and clinical in nature, in the embodiment of FIGS. **38** and **39**, the patient portion **3801** is configured as a greeting card. Experimental testing has shown that when the patient portion is configured as an instruction or informational sheet, it is less likely that the patient portion will be delivered to the patient. However, by configuring the patient portion **3801** as a greeting card, such as with a pleasant picture of flowers or similar objects on the front and stylized text providing the information therein, it is more likely to be given to the patient. The patient portion **3801** will be described in more detail below.

Beginning with FIG. **38**, illustrated therein is an exploded view of a tray **100** suitable for use in a medical procedure kit. The tray **100** has the catheter assembly **700**, a pair of syringes **701**,**702**, and a specimen container **703** disposed therein. While only a specimen container **703** is shown as being disposed in the third compartment, note that additional items could also be included within the third compartment, including swab sticks. Other devices could also be inserted into the tray **100** in various compartments as well. For example, in one embodiment, a catheter securement device, and a Foley insertion tag can be inserted into the second compartment **102**. Also, note that the pair of syringes **701**,**702** can be configured as shown in FIG. **38**, or alternatively can be both inserted in the first compartment, as described above. In the configuration of FIG. **38**, rather than having both syringes **701**,**702** disposed within the first compartment **101**, one syringe **702** is disposed laterally in the first opening **121** and the second opening **122** of the first barrier **105** and second barrier **106**, respectively. This configuration is illustrative only.

Once the necessary components are disposed within the tray **100**, the tray can be enclosed with a wrap **1000**. The wrap **1000** can be one or more layers in number, and further can be any of a number of types of material. In one embodiment, the wrap **1000** comprises a CSR wrap.

Using a CSR wrap as an illustrative example, in one embodiment as indicated in FIG. **38**, the CSR wrap **1000** is folded about the tray **100** for sealing, and can be correspondingly unfolded to reveal the tray **100** and other implements. Once unfolded, the CSR wrap **1000** can then be used in the catheter insertion process. For example, an unfolded CSR wrap **1000** can be used to provide a sterile field in which the tray **100** sits for unloading and subsequent use. This process is explained in more detail in the discussion of FIGS. **22-30**.

Printed instructions can then be attached to, disposed upon, or disposed within the tray **100**. In the illustrative

embodiment of FIG. **38**, the printed instructions are configured as a physically separate health care services portion **3802** and a patient portion **3801**, as will be shown in more detail in FIGS. **40-41** below. The health care services portion **3802** can include instructions telling the health care services provider, for example, how to set up a sterile or otherwise clean work environment, how to prepare the catheter assembly **700** disposed within the tray, how to use the other devices within the tray, how to insert the catheter, how to secure the drainage bag to the catheter, how to empty the drainage bag, how to obtain a urine sample, and so forth. The instructions can include pictures or illustrations showing visually how the various steps should be done as well.

In the embodiment of FIG. **38**, the health care services portion **3802** is configured with a checklist **1003** extending therefrom. Further, the health care services portion **3802** includes, in one embodiment, a photograph of the contents disposed within the medical procedure kit. When viewing the health care services portion **3802** from the top, the health care services provider is able to easily inventory what contents are disposed therein.

In one embodiment, the health care services portion **3802** includes a peelable flap **3803**. By pulling back the peelable flap **3803**, the health care services portion **3802** opens to reveal instructions and other information therein. For example, in one embodiment, the interior of the health care services portion **3802** can include one or more of the panels shown in FIGS. **15-19**. In one embodiment, the health care services portion **3802** may include an instruction for the health care services provider to give the patient portion **3801** to the patient, and in one embodiment, instructions to discuss the patient portion **3801** with the patient.

The patient portion **3801** can include helpful suggestions or instructions for the patient. The patient portion **3801** can be configured as a greeting card to make the information more pleasantly received by a patient. Examples of suggestions or instructions that may be included in the patient portion include information on what a catheter is, what the patient should understand about the catheter, how to reduce the chance of getting an infection, information about infections commonly associated with catheters, symptoms of infections commonly associated with catheters, and suggestions for home use of the catheter assembly **700**.

In the embodiment of FIG. **38**, the patient portion **3801** is disposed within the packaging **3804**, while the health care provider portion **3803** is affixed to the outside of the packaging **3804**. As with FIG. **34**, the medical procedure kit of FIG. **38** can include an additional layer of wrap material **2701** disposed within one or more layers of wrap material **2200**. As noted above, the additional layer of wrap material **2701** can be configured to be visibly distinguishable from the one or more layers of wrap material **2200**. For example, in one embodiment, the additional layer of wrap material **2701** is a different color than the one or more layers of wrap material **2200**.

The package of liquid hand sanitizer and package of rubber gloves described above (not shown in FIG. **38** for simplicity) can then be placed under the additional layer of wrap material **2701**. The patient portion **3801** can be placed atop the additional layer of wrap material **2701**. In such an embodiment, the package of liquid hand sanitizer (where used), the rubber gloves (where used), the additional layer of wrap material **2701**, and the patient portion **3801** can be held in place by way of a final folding step **3805**. Accordingly, they will be held in place by a folded portion **3806**. The health care services provider will be readily able to access these implements after unfolding the folded portion **3806** shown in FIG. **38**.

The health care services portion **3802** can be affixed to the packaging **3804**. The packaging **3804** can optionally include a preformed opening. For example, in one embodiment, the opening can include one or more tabs that a health care services provider is instructed to pull to open the packaging **3804**.

Turning now to FIG. **39**, illustrated therein is the medical procedure kit **3901** of FIG. **38** having the patient portion **3802** tucked-into the one or more layers of wrap **2200**. The health care services portion **3802** is affixed to the packaging **3804**. The packaging **3804** of FIG. **39** is illustratively shown as a thermally or adhesively sealed bag.

Turning now to FIGS. **12-13**, illustrated therein is one embodiment of the printed instructions **1001** in accordance with embodiments of the invention. The printed instructions **1001** can be configured as an instruction manual suitable for inclusion with a tray (**100**) as described above. FIG. **12** illustrates a view of a first side of the instruction manual, while FIG. **13** illustrates a view of a second side of the instruction manual.

In one embodiment, the printed instructions **1001** are configured as a two-portion instruction manual having a health care services portion **1201** and a patient portion **1202**. In the illustrative embodiment of FIGS. **12-13**, the patient portion **1202** is detachably coupled to the health care services portion **1201**, and is thus separated from the health care services portion **1201**, by a perforation **1203**. For example, where the printed instructions **1001** are configured as a printed material on a paper-based stock, the perforation **1203** can be a perforated line running along a dimension of the printed instructions **1001** such that the printed instructions **1001** can be easily torn along the perforation **1203** to separate the patient portion **1202** from the health care services portion **1201**. Note that the embodiment of FIGS. **12** and **13** is but one illustrative embodiment of the invention. The patient portion **1202** need not be detachably coupled to the health care services portion **1201**. As will be shown in FIGS. **27-34** below, the patient portion **1202** may be physically separate from the health care services portion **1201** as well. In the separated configuration, the health care services portion **1201** and patient portion **1202** can be disposed at different locations within a medical procedure kit.

In one embodiment, the printed instructions **1001** are configured as a plurality of panels **1204**,**1205**,**1206**,**1301**,**1302**,**1303**. As will be shown in FIG. **20**, in one embodiment the printed instructions **1001** can be configured as an instruction manual that is formed with an accordion-style fold, with each of the panels **1204**,**1205**,**1206**,**1301**,**1302**,**1303** forming a page of the instruction manual. In the illustrative embodiment of FIGS. **12-13**, panels **1204**,**1205** and panels **1301**, **1302** form the health care services portion **1201**, while panels **1206**,**1303** form the patient portion. Panels **1206**, **1303** are separated from panels **1204**,**1205** and panels **1301**, **1302** by the perforation **1203** such that the patient portion **1202** is tearably separable from the health care services portion **1201**.

In one embodiment, the health care services portion **1201** includes instructions **1304** for using the catheter assembly and other corresponding medical devices disposed within the accompanying tray. The instructions **1304** can include text and/or figures or illustrations showing how to use the catheter assembly and corresponding medical devices on the patient, as well as instructions on preparation, taking

samples, preventing infection, and so forth. The instructions **1304**, in one embodiment, also include an instruction to detach the patient portion **1202**, give the patient portion **1202** to the patient, as well as an instruction to discuss the information disposed on the patient portion **1202** with the patient.

Similarly, the patient portion **1202** may also include instructions **1305** and/or helpful suggestions for the patient who is undergoing the catheterization procedure. For instance, this information can include any one or more of the following: a description of what a catheter is, what the patient should know about the catheter, how to reduce the chance of getting an infection from the catheterization procedure, what infections commonly associated with catheterization procedures typically are, the symptoms associated with infections commonly associated with catheterization procedures, and information about using the catheter at home. Additionally, the patient portion **1202** may include custom information as well. For example, in one embodiment the patient portion **1202** includes an informational section configured such that the health care service provider's name and contact information can be written thereon. It will be clear to those of ordinary skill in the art having the benefit of this disclosure that the invention is not so limited. For example, additional types of health care service instructions or patient instructions or suggestions can also be included.

Turning now to FIGS. **14-19**, illustrated therein are exemplary panels **1204**,**1205**,**1206**,**1301**,**1302**,**1303**. These panels **1204**,**1205**,**1206**,**1301**,**1302**,**1303** are intended to illustrate exemplary instructions for the health care services portion (**1201**) and patient portion (**1202**) of an illustrative instruction manual for a catheter assembly and corresponding medical devices included with an accompanying tray (**100**). It will be clear that these panels **1204**,**1205**,**1206**,**1301**,**1302**, **1303** and the information printed thereon can be varied in any number of ways without departing from the spirit and scope of the invention as described herein and recited in the following claims. For example, the number of panels can be varied. Additionally, the information printed thereon can be condensed, expanded, or altered without departing from the spirit and scope of the invention. Also, the exemplary information may be moved from the panels shown to other panels, as a particular application may warrant.

Beginning with FIG. **14**, illustrated therein is one exemplary panel **1204**. In one embodiment, panel **1204** will be configured such that when the catheter package assembly within which the instruction manual is disposed is initially opened, panel **1204** will be readily viewable. For example, where the catheter package assembly is assembled as shown in FIG. **10** above, once the sterile wrap (**1002**) is removed, the panel **1204** will be viewable prior to removal of the CSR wrap (**1000**).

Panel **1204** can include general information about the catheter assembly and corresponding medical devices disposed within the tray. For example, this information can include part number information **1401**, trade name information **1402**, and manufacturer information **1403**. A diagram **1404** of the contents of the package assembly may be included as well. The illustrative diagram **1404** of FIG. **14** illustrates a tray **100** having a catheter assembly **700** and corresponding medical devices disposed therein. The corresponding medical devices of this illustrative embodiment include a pair of syringes **701**,**702** and a specimen container **703**. Additionally swab sticks **1408**, a catheter securement device **1409**, a Foley insert tag **1410**, vinyl gloves **1411**, a fenestrated drape **1412**, an underbuttocks drape **1413**, and a hand sanitizer **1414** solution or wipe are disposed within the tray **100**.

In addition to a diagram **1404**, panel **1204** can also include a written description **1407** of the elements included in the tray **100**. Further, sterility information **1407** can be included. Panel **1204** can even include instructional material **1406** on how to use the instruction manual as well.

Turning now to FIG. **15**, illustrated therein is one embodiment of panel **1301**. As will be described below with respect to FIG. **20**, in one embodiment the printed instructions (**1001**) are configured as an accordion-style folded instruction manual. In such a configuration, panel **1301** can be disposed on the back of panel **1204**. Panel **1301** will therefore be visible upon a health care services provider opening the instruction manual.

Panel **1301** can include instructions for using the catheter assembly and the corresponding medical devices. As can be seen from this illustrative embodiment, panel **1301** can include instructions for setting up a clean work area. The instructions can include text, pictures, illustrations, or combinations of these.

In one embodiment, the instructions for setting up a clean work area include a hygiene performance step **1501**, which may include instructions to wash hands, optionally put on gloves (which at this step can be non-sterile gloves), and so froth. The instructions may then include information on opening the remainder of the catheter package assembly. For instance, in FIG. **15** step **1502** indicates that the health care provider should remove the CSR wrap (**1000**), which in this case is folded about the tray (**100**). Note that in this illustrative embodiment, as the CSR wrap (**1000**) is folded about the tray (**100**), removal of the CSR wrap (**1000**) by unfolding creates a sterile field about the tray (**100**).

Step **1503** then instructs the health care provide to pick up the underbuttocks of the patient and to place the underbuttocks wrap beneath the patient. Step **1504** then instructs the health care provider to use the hand sanitizing solution provided with the catheter package assembly.

As with other panels shown in FIGS. **14-19**, the various panels may include suggestions **1505** for preventing a catheter associated urinary tract infection. Some of this information is illustratively shown in FIG. **15**. It will be understood that this information can be placed on one or more panels.

In addition to information for setting up a clean work area, in one embodiment panel **1301** includes instructions for preparing the catheter assembly (**700**) as well. For example, step **1506** instructs the health care services provider to don sterile gloves, as the hands were sanitized at step **1504**. Step **1507** tells the health care services provider to place the fenestrated drape with a shiny side down on the patient without contaminating the sterile gloves donned at step **1506**. Step **1508** instructs the health care services provider to test the balloon of the catheter assembly with the water-filled syringe stored in the first compartment. Step **1508** also instructs the health care services provider to leave the syringe connected to the catheter assembly.

Step **1509** then provides instructions on using the first compartment of the tray as a lubricant application chamber as described above. Specifically, in this illustrative embodiment, step **1509** instructs the health care services provider to inject the lubricating jelly found in the second syringe of the first compartment into the first compartment. Step **1509** also instructs the health care services provider to pass the tip of the catheter through the first opening in the wall separating

the first compartment and second compartment into the lubricating jelly, thereby lubricating the tip of the catheter.

Turning now to FIG. **16**, illustrated therein is an exemplary embodiment of panel **1302**. The instructions printed thereon continue to provide the health care services provider with information regarding use of the catheter assembly. For example, in one embodiment, this information includes instructions on inserting the catheter.

At step **1601**, the instructions direct the health care services provider to tear open the swab stick package and to use the swab sticks to clean the patient from the top down. The instruction also notes that each swab stick is intended for one use only to properly maintain the sterile field. Step **1602** directs the health care services provider to initiate the catheterization process by inserting the catheter assembly into the patient. Steps **1603** and **1604** continue this process as shown in FIG. **16**.

Step **1605** directs the health care services provider to secure the drainage bag to the catheter assembly. Step **1606** directs the health care services provider to clean up upon completion of the catheterization process. Step **1607** provides instructions on completing the label on the Foley insertion tag included with the catheter package assembly and attaching it to the tubing or drain bag attached to the catheter assembly.

At step **1608**, the health care services provider is instructed to detach the patient portion (**1202**) from the health care services portion (**1201**) by tearing the two apart along the perforation (**1203**). Step **1609** further instructs the health care services provider to discuss the patient information printed upon the patient portion (**1202**) with the patient. Step **1609** instructs that documentation of the entire procedure should be completed.

Turning now to FIG. **17**, illustrate therein is one embodiment of panel **1303**, which represents a first side of the patient portion (**1202**). This panel **1303** includes information **1701** describing what a catheter is and why a catheter might be used. The panel **1303** also includes information **1702** describing what the patient should know regarding catheters and catheter use. For example, this information **1702** might notify the patient that the health care services provider should wash hands prior to inserting the catheter, and that it is acceptable to ask them to do so if they have not done so before the patient.

The panel **1303** also includes information **1703** regarding how the patient can reduce the chances of getting an infection. This information **1703** can include a statement that the patient should wash their hands prior to touching the catheter assembly. The information **1703** may also include a statement that the drainage bag should always be kept at a level beneath the patient's navel, and that the patient should inform a helper when the bag is more than half full.

Turning to FIG. **18**, illustrated therein is one embodiment of panel **1206**. In this illustrative embodiment, panel **1206** forms the second side of the patient portion (**1202**) of the instruction manual, and accordingly, includes additional information that a patient may wish to know when using a catheter assembly.

By way of example, information **1801** informs the patient as to what common infections associated with catheter use are and how they are contracted. Information **1802** provides symptoms of these common infections, such as fever, blood in the urine, burning or painful urination, or frequent or more urgent urination after catheter removal. Information **1803** informs the patient of what they should know prior to going home after a catheter procedure.

Information **1804** comprises an informational section configured such that a health care provider's name and contact information may be written thereon. This is helpful to the patient in the event that the symptoms recited in information **1802** should arise after the procedure, in that the patient has readily available access to the information required to contact a physician or other health care provider. An advantage of having this information **1804** on the patient portion (**1202**) when the patient portion (**1202**) is detachable is that the patient can take it with them upon completion of the procedure.

Turning now to FIG. **19**, which is a portion of the health care services portion (**1201**), illustrated therein is one embodiment of panel **1205** that provides additional health services information. For example, information **1901** for emptying the drain bag and information **1902** describing how to obtain a urine sample can be included.

Turning now to FIG. **20**, illustrated therein is one physical configuration in which the printed instructions **1001** can be delivered along with the catheter package assembly in accordance with embodiments of the invention. FIG. **20** is but one of many configurations, and embodiments of the invention are not to be limited in this respect, as FIG. **20** is illustrative only.

In FIG. **20**, the printed instructions **1001** are configured as a tri-section, accordion style bi-folded panel. Three sections **2000**,**2001**,**2002** are folded in an accordion style, with two folds **2003**,**2004** existing between the sections **2000**,**2001**, **2002**. When the printed instructions **1001** are configured as shown in FIGS. **12-13**, folding the printed instructions **1001** in this manner allows the health care services portion **1201** to be disposed atop the patient portion **1202**. Further, when the printed instructions are disposed atop a CSR wrap (**1000**) as shown in FIG. **10**, by disposing the patient portion **1202** adjacent to the CSR wrap (**1000**), the health care services provider removing the sterile wrap (**1002**) off of the catheter package assembly will be assured of seeing the health care services portion **1201** first.

Turning now to FIG. **40**, illustrated therein is an alternate embodiment of printed instructions **4000** configured in accordance with embodiments of the invention. The printed instructions **4000** of FIG. **40** are suitable for use as the health care services portion (**3802**) of FIGS. **38-39**, in that it can be configured as an adhesive label with a peelable flap **4001**. Further, the illustrative embodiment includes a checklist **4002** as described above in FIG. **38**.

In the embodiment of FIG. **40**, the top cover of the printed instructions **4000** include a picture **4003** of the contents of the medical procedure kit. In one embodiment, the picture **4003** is a color photograph set on a black background to make visibility simple. Above the picture is a title bar **4004**. In one embodiment, the title bar **4004** tells a health care services provider what type of medical procedure kit is disposed therein, and is white text on a blue background.

A flap indicator **4005** indicates that more information is located within the printed instructions **4000**. The additional information, which can be one or more of the panels shown in FIGS. **15-19** above, can be accessed by the peelable flap **4001**. In one embodiment, the flap indicator is configured with black text on a yellow background.

The checklist **4002** can be configured as described above. In the embodiment of FIG. **40**, a red warning bar **4006** having white text thereon is disposed above a checklist section **4007** that is yellow, having black text and white check boxes in this illustrative embodiment.

Turning now to FIG. **41**, illustrated therein is one embodiment of a patient portion **3801** configured as a greeting card

as was described with FIGS. **38-39**. The patient portion **3801** in this illustrative embodiment includes an inspirational phrase **4103** on the front cover, along with an aesthetically pleasing image **4101**. The aesthetically pleasing image **4101** of FIG. **41** is a vase of flowers, although it will be clear to those of ordinary skill in the art having the benefit of this disclosure that embodiments of the invention are not so limited. Other aesthetically pleasing images include puppies, sunsets, mountain streams, and so forth. The bottom of the patient portion **3801** includes in identifier **4103** that tells the patient the purpose of the patient portion **3801**.

The interior of the patient portion **3801** can include text. For example, in one embodiment where the patient portion **3801** is to be included with a catheter assembly, the interior includes the following illustrative text:

Here is some simple information about foley catheterization:

1. What is a Urinary Catheter?

A thin flexible tube that drains urine from the bladder into a collection bag. The catheter helps:

When you can't urinate.

To measure how much urine you're producing.

During and after some surgeries or tests.

2. What should you know about your catheter?

Only a trained technician inserts a catheter when necessary, and it is removed as soon as possible.

Caregivers must wash hands with soap or use alcohol-based rubs before and after touching your catheter.

If your caregivers don't clean their hands, politely ask them to.

Do not disconnect the catheter yourself.

Inquire every day whether you still need the catheter.

3. What is 'catheter-associated' urinary tract infection (CAUTI)?

If a catheter introduces 'outside' germs into your urinary tract, they can cause an invention. If a UTI is acquired, you may experience:

Sudden fever and/or bloody urine.

Burning or painful urination, or pain below the stomach.

Frequent, or more urgent, urinating after catheter is removed.

Tell your provider right away. An antibiotic may be needed.

4. Can you reduce your chances of an infection? Absolutely!

Wash your hands before and after touching your catheter.

Make sure the tube is secured to your leg. Never twist, or tug on it.

Always keep the collection bag below the level of your belly button.

Do not disconnect the catheter yourself.

Ask your doctor every day whether you still need the catheter.

The above information on the patient portion **3801** can be printed in multiple languages, such as in Spanish or in English. Where two languages are used, the back portion may be the same as the image shown in FIG. **41**, but with the inspirational phrase **4102** and identifier **4103** set forth in a different language. Further, alternatives and variations of the information can be substituted for the example set forth above.

Turning now to FIG. **21**, illustrated therein is a method **2100** of using the printed instructions (**1001**) as described herein. At step **2101**, a health care services provider removes the sterile wrap (**1002**) disposed about the catheter package assembly. Where the catheter package assembly is configured as shown in FIG. **10**, removal of the sterile wrap (**1002**) will reveal the printed instructions (**1001**). Where the printed instructions (**1001**) are configured as described in FIG. **20**, with the patient portion (**1202**) disposed adjacent to the CSR wrap (**1000**), the health care services provider will see the health care services portion (**1201**) first.

At step **2102**, the health care services provider accesses the printed instructions (**1001**) and begins to read the panels, which in one embodiment are panels configured in accordance with those described in FIGS. **14-19** above.

At step **2103**, the health care services provider unfolds the outer CSR wrap (**1000**), which in one embodiment is then used to create a sterile field about the tray (**100**). At step **2104**, the health care services provider prepares the workspace, which in one embodiment may be in accordance with steps (**1501**,**1502**,**1503**,**1504**) of panel (**1301**) in FIG. **15**. For example, this may include donning non-sterile gloves, as shown at step (**1501**) of FIG. **15**. This may further include picking up the underbuttocks drape, included with the tray (**100**), by the edge without contaminating the contents and placing the shiny side down under the area of the patient to be prepped as shown at step (**1503**) of FIG. **15**. This may further include using the hand sanitizer as shown at step (**1504** of FIG. **15**.

At step **2105**, the health care services provider prepares the catheter, which in one embodiment may be in accordance with steps (**1506**,**1507**,**1508**,**1509**) of panel (**1301**) as described in FIG. **15**. For example, this can include donning sterile gloves as shown at step (**1506**) of FIG. **15**. This may include placing a fenestrated drape, included with the tray (**100**), with the shiny side down on the patient without contaminating the sterile gloves, as shown at step (**1507**) of FIG. **15**. This may include filling a test balloon of the catheter assembly with water as shown at step (**1508**) of FIG. **15**, and injecting lubricating jelly from a syringe into the first compartment of the tray (**100**) as shown at step **1509** of FIG. **15**.

At step **2106**, the health care services provider inserts the catheter. In one embodiment, this can be in accordance with steps (**1601**,**1602**,**1603**,**1604**) of panel (**1302**) as described in FIG. **16**. At step **2107**, the health care provider secures the drain bag to the catheter assembly, which can be in accordance with steps (**1605**,**1606**,**1607**) described with respect to FIG. **16**.

At step **2108**, the health care services provider detaches the patient portion (**1202**) of the printed instructions (**1001**) from the health care services portion (**1201**). In one embodiment, this occurs by tearing the patient portion (**1202**) from the health care services portion (**1201**) along the perforation (**1203**), thereby transforming the printed instructions (**1001**) or instruction manual from a singular or unitary object into a two-piece object consisting of the patient portion (**1202**) and the health care services portion (**1201**). As described, above, the health care services provider may then discuss the patient portion (**1202**) with the patient and further give the patient portion (**1202**) to the patient to take home after the procedure.

Turning now to FIGS. **31**, **32**, and **33**, illustrated therein is one embodiment of a method of using the packaged catheter assembly **2901** of FIG. **29**. At FIG. **31**, a health care services provider **3101** opens the outer bag **2902** that is disposed about the tray **100** and removes the bag **2902** to reveal the packaged catheter assembly **2901** therein. The health care services provider **3101** can then access the instruction manual **1001** that is disposed atop the packaged catheter assembly **2901** in this illustrative embodiment.

The health care services provider **3101** can then unfold the one or more layers of wrap material **2200**. Where an

additional layer of wrap material **2701** is included, this unfolding step reveals and makes accessible the additional layer of wrap material **2701**. Note that portions of the additional layer of wrap material **2701** may be visible, as shown in FIG. **29**, prior to the steps of unfolding.

As noted above, in one embodiment the one or more layers of wrap material **2200** can be unfolded to form a sterile field. Turning now to FIG. **32**, illustrated therein is a step of the method that utilizes this sterile field. Specifically, in FIG. **32** the health care services provider **3101** places the one or more layers of wrap material **2200** beneath the patient **3201**, thereby transforming the area beneath the patient from a non-sterile field to a sterile field. Said differently, by placing the patient **3201** atop the one or more layers of wrap material **2200**, the patient is effectively moved from a location that may have not been a sterile field to the sterile field atop the one or more layers of wrap material **2200**.

Turning now to FIG. **33**, illustrated therein is a step of the method that may be used when an additional layer of wrap material **2701** is included with the packaged catheter assembly **2901**. In FIG. **33**, the health care services provider **3101** is placing the additional layer of wrap material **2701** atop the patient **3201**. Note that in the illustrative embodiment of FIG. **33**, the additional layer of wrap material **2701** is fenestrated, in that it includes a perforated opening **3301** suitable for performing a catheterization procedure.

In the foregoing specification, specific embodiments of the present invention have been described. However, one of ordinary skill in the art appreciates that various modifications and changes can be made without departing from the scope of the present invention as set forth in the claims below. Thus, while preferred embodiments of the invention have been illustrated and described, it is clear that the invention is not so limited. Numerous modifications, changes, variations, substitutions, and equivalents will occur to those skilled in the art without departing from the spirit and scope of the present invention as defined by the following claims. Accordingly, the specification and figures are to be regarded in an illustrative rather than a restrictive sense, and all such modifications are intended to be included within the scope of present invention. The benefits, advantages, solutions to problems, and any element(s) that may cause any benefit, advantage, or solution to occur or become more pronounced are not to be construed as a critical, required, or essential features or elements of any or all the claims.

What is claimed is:

1. A medical procedure kit, comprising:

a tray having a compartment for receiving a medical assembly;

a first syringe and a second syringe disposed within the tray;

at least one layer of wrap material enclosing the tray within one or more folds of the at least one layer of wrap material; and

an outer packaging disposed about both the tray and the at least one layer of wrap material, wherein:

the first syringe and the second syringe are ordered within the tray in accordance with their use during a catheterization procedure; and

the tray comprises a surface defining at least two compartments, the at least two compartments comprising a first compartment to support the first syringe and the second syringe; and

the first compartment comprising a base member that defines a mnemonic device indicating which of the first syringe or the second syringe should be used first in the catheterization procedure.

2. The medical procedure kit of claim **1**, the first syringe and the second syringe ordered within the tray in accordance with their use during the catheterization procedure.

3. The medical procedure kit of claim **1**, further comprising one or more of an instruction set, one or more medical devices, or combinations thereof disposed within the one or more folds.

4. The medical procedure kit of claim **1**, wherein:

the first syringe and the second are ordered within the tray in accordance with their use during the catheterization procedure;

the tray comprises a surface defining at least two compartments, the at least two compartments comprising the first compartment to support the first syringe and the second syringe at different heights;

the at least two compartments bounded by a perimeter wall less than three inches in height;

the first compartment defines one or more contours for accommodating flanges of one or more of the first syringe or the second syringe; and

the at least two compartments further comprising a second compartment separated from the first compartment by a wall with an opening, further comprising a catheter assembly disposed within the second compartment, the catheter assembly comprising a fluid bag.

5. The medical procedure kit of claim **4**, the first compartment defining a lubricating jelly application chamber to lubricate at least a portion of the catheter assembly.

6. The medical procedure kit of claim **1**, the first compartment defining one or more contours for accommodating flanges of one or more of the first syringe or the second syringe.

7. The medical procedure kit of claim **1**, the first compartment defining a lubricating jelly application chamber to lubricate at least a portion of a catheter assembly.

8. The medical procedure kit of claim **1**, the first compartment to support the first syringe at a shallower depth within the tray than the second syringe.

9. The medical procedure kit of claim **1**, the first compartment to support the first syringe and the second syringe at different heights based upon use during the catheterization procedure.

10. The medical procedure kit of claim **1**, wherein a higher of the first syringe or the second syringe is for use in the catheterization procedure before a lower of the first syringe or the second syringe.

11. The medical procedure kit of claim **10**, the at least two compartments further comprising a second compartment separated from the first compartment by a wall with an opening, further comprising a catheter assembly disposed within the second compartment.

12. The medical procedure kit of claim **11**, the at least two compartments bounded by a perimeter wall less than three inches in height.

13. The medical procedure kit of claim **12**, the tray comprising a single tray.

14. The medical procedure kit of claim **13**, the catheter assembly comprises a fluid bag.

15. The medical procedure kit of claim **14**, the fluid bag disposed within the second compartment.

16. The medical procedure kit of claim **1**, the tray comprising a surface defining at least two compartments, the at least two compartments comprising the first compartment to support the first syringe.

17. The medical procedure kit of claim **16**, the first compartment defining a lubricating jelly application chamber to lubricate at least a portion of a catheter assembly.

18. The medical procedure kit of claim **17**, further comprising printed instructions for using the tray.

19. The medical procedure kit of claim **18**, the printed instructions to instruct application of lubricating jelly to the catheter assembly using the lubricating jelly application chamber.

20. The medical procedure kit of claim **17**, the at least two compartments further comprising a second compartment separated from the first compartment by a wall with an opening, the printed instructions instructing passage of at least some of the catheter assembly through the opening into lubricating jelly to lubricate the at least some of the catheter assembly.

21. The medical procedure kit of claim **20**, the first compartment defining a lubricating jelly application compartment.

22. The medical procedure kit of claim **21**, the lubricating jelly application compartment to receive the lubricating jelly from one of the first syringe or the second syringe to lubricate at least some of the catheter assembly when the catheter assembly is passed from the second compartment to the first compartment.

23. The medical procedure kit of claim **22**, the tray comprising printed instructions disposed thereon to dispense the lubricating jelly into the compartment.

24. The medical procedure kit of claim **23**, the printed instructions one or more of printed, placed upon, or molded into the tray.

25. A medical procedure kit, comprising:

a tray having a compartment for receiving a medical assembly;

a first syringe and a second syringe disposed within the tray;

at least one layer of wrap material enclosing the tray within one or more folds of the at least one layer of wrap material; and

an outer packaging disposed about both the tray and the at least one layer of wrap material, wherein:

the first syringe and the second syringe are ordered within the tray in accordance with their use during a catheterization procedure; and

the tray comprises a surface defining at least two compartments, the at least two compartments comprising a first compartment to support the first syringe and the second syringe;

the first compartment to support the first syringe and the second syringe at different heights according to predetermined steps of the catheterization procedure.

26. The medical procedure kit of claim **25**, the first syringe and the second syringe ordered within the tray in accordance with their use during the catheterization procedure.

27. The medical procedure kit of claim **25**, further comprising one or more of an instruction set, one or more medical devices, or combinations thereof.

28. The medical procedure kit of claim **25**, the first compartment defining a lubricating jelly application chamber to lubricate at least a portion of a Foley catheter.

29. The medical procedure kit of claim **25**, the first compartment defining one or more contours for accommodating flanges of one or more of the first syringe or the second syringe.

30. The medical procedure kit of claim **25**, the first compartment to support the first syringe at a shallower depth within the tray than the second syringe.

31. The medical procedure kit of claim **25**, wherein a higher of the first syringe or the second syringe is for use in the catheterization procedure before a lower of the first syringe or the second syringe.

32. The medical procedure kit of claim **25**, the at least two compartments further comprising a second compartment, further comprising a Foley catheter disposed within the second compartment.

33. The medical procedure kit of claim **32**, the Foley catheter coupled to a fluid bag.

34. The medical procedure kit of claim **33**, the fluid bag disposed within the second compartment.

35. The medical procedure kit of claim **32**, further comprising printed instructions instructing application of lubricating jelly to the Foley catheter using the first compartment.

36. The medical procedure kit of claim **25**, the tray comprising a single tray.

37. A medical procedure kit, comprising:

a tray having a compartment for receiving a medical assembly;

a first syringe and a second syringe disposed within the tray;

at least one layer of wrap material enclosing the tray within one or more folds of the at least one layer of wrap material; and

an outer packaging disposed about both the tray and the at least one layer of wrap material, wherein:

the first syringe and the second syringe are ordered within the tray in accordance with their use during a catheterization procedure; and

the tray comprises a surface defining at least two compartments, the at least two compartments comprising a first compartment to support the first syringe and the second syringe;

wherein steps of the catheterization procedure use a higher of the first syringe or the second syringe before a lower of the first syringe or the second syringe.

38. The medical procedure kit of claim **37**, the first compartment defining a lubricating jelly application chamber to lubricate at least a portion of a catheter assembly.

39. The medical procedure kit of claim **37**, the first compartment defining one or more contours for accommodating flanges of one or more of the first syringe or the second syringe.

40. The medical procedure kit of claim **37**, the tray comprising a single tray.

41. The medical procedure kit of claim **40**, the tray comprising a surface defining a second compartment, further comprising a Foley catheter disposed within the second compartment.

42. The medical procedure kit of claim **41**, further comprising a fluid bag disposed within the second compartment.

43. The medical procedure kit of claim **42**, further comprising printed instructions for using the tray.

44. The medical procedure kit of claim **43**, the printed instructions instructing application of lubricating jelly to the Foley catheter using the first compartment.

45. A medical procedure kit, comprising:

a single layer tray having a first compartment for receiving syringes and a second compartment for receiving a medical assembly;

a first syringe and a second syringe disposed within the first compartment;

the medical assembly disposed in the second compartment, wherein the medical assembly comprises a coiled tubing coupled between a fluid drain bag and a Foley catheter;

at least one layer of wrap material enclosing the single layer tray within one or more folds of the at least one layer of wrap material; and

an outer packaging disposed about both the single layer tray and the at least one layer of wrap material.

46. The medical procedure kit of claim **45**, wherein one of the first syringe or the second syringe contains lubricating jelly.

47. The medical procedure kit of claim **46**, wherein another of the first syringe or the second syringe contains water.

48. The medical procedure kit of claim **47**, wherein the water is sterile.

49. The medical procedure kit of claim **45**, further comprising a specimen jar disposed within the single layer tray.

50. The medical procedure kit of claim **45**, the single layer tray comprising a lubricating jelly application compartment.

51. The medical procedure kit of claim **50**, the lubricating jelly application compartment to receive lubricating jelly from one of the first syringe or the second syringe to lubricate at least some of the Foley catheter.

52. The medical procedure kit of claim **45**, further comprising printed instructions for using the single layer tray.

53. The medical procedure kit of claim **52**, the printed instructions to instruct application of lubricating jelly to the Foley catheter using a lubricating jelly application compartment of the single layer tray.

54. The medical procedure kit of claim **45**, further comprising one or more swabsticks disposed within the single layer tray.

55. The medical procedure kit of claim **45**, further comprising a Foley catheter securement device disposed within the single layer tray.

56. The medical procedure kit of claim **45**, further comprising an underbuttocks drape disposed within the outer packaging.

57. The medical procedure kit of claim **45**, further comprising gloves disposed within the outer packaging.

58. The medical procedure kit of claim **45**, further comprising hand sanitizer disposed within the outer packaging.

59. The medical procedure kit of claim **45**, further comprising a diagram of contents of the medical procedure kit.

60. The medical procedure kit of claim **45**, further comprising a fenestrated drape disposed within the outer packaging.

61. A medical procedure kit, comprising:

a surface defining a single layer tray having a first compartment separated by a barrier from a second compartment, the second compartment configured for receiving a medical assembly comprising a Foley catheter, a coiled tubing, and a fluid drain bag;

a first syringe and a second syringe disposed within the first compartment;

the medical assembly disposed in the second compartment;

at least one layer of wrap material enclosing the single layer tray within one or more folds of the at least one layer of wrap material; and

an outer packaging disposed about both the single layer tray and the at least one layer of wrap material.

62. The medical procedure kit of claim **61**, wherein one of the first syringe or the second syringe contains lubricating jelly.

63. The medical procedure kit of claim **62**, wherein another of the first syringe or the second syringe contains water.

64. The medical procedure kit of claim **63**, wherein the water is sterile.

65. The medical procedure kit of claim **64**, further comprising a specimen jar disposed within the single layer tray.

66. The medical procedure kit of claim **61**, the single layer tray comprising a lubricating jelly application compartment.

67. The medical procedure kit of claim **66**, the lubricating jelly application compartment to receive lubricating jelly from one of the first syringe or the second syringe to lubricate at least some of the Foley catheter.

68. The medical procedure kit of claim **61**, further comprising printed instructions for using the single layer tray.

69. The medical procedure kit of claim **68**, the printed instructions to instruct application of lubricating jelly to the Foley catheter using a lubricating jelly application compartment of the single layer tray.

70. The medical procedure kit of claim **61**, further comprising one or more swabsticks disposed within the single layer tray.

71. The medical procedure kit of claim **61**, further comprising a Foley catheter securement device disposed within the single layer tray.

72. The medical procedure kit of claim **71**, further comprising an underbuttocks drape disposed within the outer packaging.

73. The medical procedure kit of claim **71**, further comprising gloves disposed within the outer packaging.

74. The medical procedure kit of claim **73**, further comprising hand sanitizer disposed within the outer packaging.

75. The medical procedure kit of claim **73**, further comprising a diagram of contents of the medical procedure kit.

76. The medical procedure kit of claim **73**, further comprising a fenestrated drape disposed within the outer packaging.

77. A medical procedure kit, comprising:

a single layer tray having a first compartment separated by a barrier from a second compartment configured for receiving a medical assembly;

a first syringe and a second syringe disposed within the first compartment;

the medical assembly disposed in the second compartment, the medical assembly consisting essentially of a Foley catheter coupled to a coiled tubing, wherein the coiled tubing is coupled to a fluid drain bag;

at least one layer of wrap material enclosing the single layer tray within one or more folds of the at least one layer of wrap material; and

an outer packaging disposed about both the single layer tray and the at least one layer of wrap material.

78. The medical procedure kit of claim **77**, wherein one of the first syringe or the second syringe contains lubricating jelly.

79. The medical procedure kit of claim **78**, wherein another of the first syringe or the second syringe contains water.

80. The medical procedure kit of claim **79**, wherein the water is sterile.

81. The medical procedure kit of claim **77**, further comprising a specimen jar disposed within the single layer tray.

82. The medical procedure kit of claim **77**, the single layer tray comprising a lubricating jelly application compartment.

83. The medical procedure kit of claim **82**, the lubricating jelly application compartment to receive lubricating jelly from one of the first syringe or the second syringe to lubricate at least some of the Foley catheter.

84. The medical procedure kit of claim **77**, further comprising printed instructions for using the single layer tray.

85. The medical procedure kit of claim **84**, the printed instructions to instruct application of lubricating jelly to the Foley catheter using a lubricating jelly application compartment of the single layer tray.

86. The medical procedure kit of claim **77**, further comprising one or more swabsticks disposed within the single layer tray.

87. The medical procedure kit of claim **77**, further comprising a Foley catheter securement device disposed within the single layer tray.

88. The medical procedure kit of claim **87**, further comprising an underbuttocks drape disposed within the outer packaging.

89. The medical procedure kit of claim **77**, further comprising gloves disposed within the outer packaging.

90. The medical procedure kit of claim **89**, further comprising hand sanitizer disposed within the outer packaging.

91. The medical procedure kit of claim **90**, further comprising a diagram of contents of the medical procedure kit.

92. The medical procedure kit of claim **90**, further comprising a fenestrated drape disposed within the outer packaging.

* * * * *

EXHIBIT 19

(19)日本国特許庁(JP)　(12)公開特許公報(A)　(11)特許出願公開番号
特開2007-229520
(P2007-229520A)
(43)公開日　平成19年9月13日(2007.9.13)

(51)Int.Cl.		F I		テーマコード（参考）
A61M 16/01	(2006.01)	A61M 16/01	Z	

審査請求 未請求　請求項の数 8　ＯＬ　（全 12 頁）

(21)出願番号　特願2007-160770 (P2007-160770)
(22)出願日　平成19年6月18日 (2007.6.18)
(62)分割の表示　特願2000-334588 (P2000-334588)の分割
原出願日　平成12年11月1日 (2000.11.1)

(71)出願人　000109543
テルモ株式会社
東京都渋谷区幡ヶ谷２丁目４４番１号
(74)代理人　100091292
弁理士　増田　達哉
(72)発明者　今井　正臣
東京都渋谷区幡ヶ谷２丁目４４番１号　テルモ株式会社内
(72)発明者　外山　圭世
東京都渋谷区幡ヶ谷２丁目４４番１号　テルモ株式会社内

(54)【発明の名称】包装体

(57)【要約】
【課題】処置具のまとまりが良く、使い易い包装体を提供すること。
【解決手段】硬膜外麻酔用キット１は、処置具として、鉗子２と、複数の綿球３と、複数のカップ４と、硬膜外針５と、硬膜外カテーテル６と、コネクタ７と、フィルタ８と、低摩擦シリンジ９と、複数のガーゼ１０と、ドレッシング１１と、テープ１２と、複数のシリンジ１３と、複数の注射針１４とを有し、さらに第１小トレー１００と、第２小トレー２００と、これら全てを収納する大トレー（容器）３００と、ドレープ１５と、シート１６とを有し、これらが包材内に収納されて包装体を構成している。第１小トレー１００と、第２小トレー２００は、それぞれ、処置具のうちの１または２以上をまとめて収納した状態で、大トレー３００内に収納されている。また、第２小トレー２００は、その内部が仕切り部２２０により、３つの収納空間２３１～２３３に区画されている。
【選択図】図１

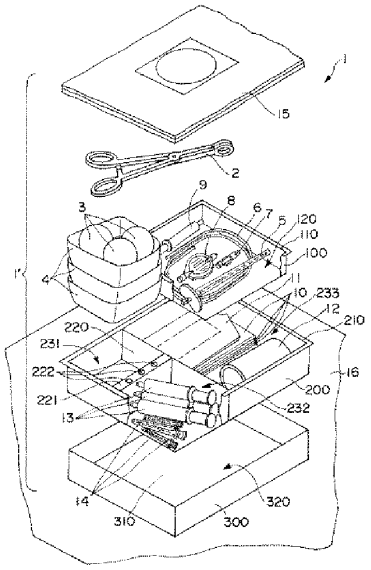

【特許請求の範囲】
【請求項1】
シリンジ、注射針を含む複数種の処置具と、前記処置具の少なくとも一部を収納する複数の小トレーと、前記処置具および複数の前記小トレーの全てを収納する容器とを有するキット本体を包材内に収納してなる包装体であって、
複数の前記小トレーは、それぞれ、前記処置具のうちの１または２以上をまとめて収納した状態で、前記容器内に収納されていることを特徴とする包装体。
【請求項2】
前記処置具は、さらに、硬膜外針またはカテーテルを含む請求項１に記載の包装体。
【請求項3】
前記処置具は、さらに、綿球、カップ、コネクタ、フィルタ、低摩擦シリンジ、ドレッシング、ガーゼ、テープ、鉗子およびピンセットからなる群より選択される少なくとも１つを含む請求項１または２に記載の包装体。
【請求項4】
複数の前記小トレーのうちの少なくとも１つは、前記注射針を立てた状態で保持可能な針立て部を有する請求項１ないし３のいずれかに記載の包装体。
【請求項5】
複数の前記小トレーおよび前記容器は、紙で構成されている請求項１ないし４のいずれかに記載の包装体。
【請求項6】
複数の前記小トレーのうちの少なくとも１つは、仕切り部により区画されている請求項１ないし５のいずれかに記載の包装体。
【請求項7】
前記処置具、複数の前記小トレーおよび前記容器を包むシートをさらに有する請求項１ないし６のいずれかに記載の包装体。
【請求項8】
ドレープをさらに有する請求項１ないし７のいずれかに記載の包装体。

【発明の詳細な説明】
【技術分野】
【0001】
本発明は、処置具の包装体に関するものである。
【背景技術】
【0002】
従来、硬膜外麻酔術の施行の際には、予め、例えば、硬膜外カテーテル導入針、硬膜外カテーテル、コネクタ、シリンジ、注射針等の処置具を、別個に用意している。
【0003】
しかしながら、この作業は、煩雑で時間を要するものである。
また、前記の処置具は、別個に用意されるので、まとまりが無く、使い勝手が悪い。
【発明の開示】
【発明が解決しようとする課題】
【0004】
本発明の目的は、まとまりが良く、使い易い処置具の包装体を提供することにある。
【課題を解決するための手段】
【0005】
このような目的は、下記（１）～（８）の本発明により達成される。
（１）　シリンジ、注射針を含む複数種の処置具と、前記処置具の少なくとも一部を収納する複数の小トレーと、前記処置具および複数の前記小トレーの全てを収納する容器とを有するキット本体を包材内に収納してなる包装体であって、
複数の前記小トレーは、それぞれ、前記処置具のうちの１または２以上をまとめて収納した状態で、前記容器内に収納されていることを特徴とする包装体。

【0006】
（２）　前記処置具は、さらに、硬膜外針またはカテーテルを含む上記（１）に記載の包装体。
【0007】
（３）　前記処置具は、さらに、綿球、カップ、コネクタ、フィルタ、低摩擦シリンジ、ドレッシング、ガーゼ、テープ、鉗子およびピンセットからなる群より選択される少なくとも１つを含む上記（１）または（２）に記載の包装体。
【0008】
（４）　複数の前記小トレーのうちの少なくとも１つは、前記注射針を立てた状態で保持可能な針立て部を有する上記（１）ないし（３）のいずれかに記載の包装体。
【0009】
（５）　複数の前記小トレーおよび前記容器は、紙で構成されている上記（１）ないし（４）のいずれかに記載の包装体。
【0010】
（６）　複数の前記小トレーのうちの少なくとも１つは、仕切り部により区画されている上記（１）ないし（５）のいずれかに記載の包装体。
【0011】
（７）　前記処置具、複数の前記小トレーおよび前記容器を包むシートをさらに有する上記（１）ないし（６）のいずれかに記載の包装体。
（８）　ドレープをさらに有する上記（１）ないし（７）のいずれかに記載の包装体。
【発明の効果】
【0012】
本発明によれば、処置具のまとまりが良く、使い易い包装体を提供することができる。
また、小トレーおよび容器を紙で構成した場合には、廃棄時にこれらを圧縮して小さくすることができるので、より容易に廃棄することができる。
【発明を実施するための最良の形態】
【0013】
以下、本発明の包装体を添付図面に示す好適実施形態に基づいて詳細に説明する。
図１は、本発明の包装体の実施形態（硬膜外麻酔用キット）の分解状態を示す斜視図であり、図２は、本発明の包装体の実施形態の使用前（包材開封前）の状態を示す斜視図であり、図３は、小トレーの収納状態を示す平面図であり、図４は、図３中Ａ－Ａ線断面図であり、図５は、硬膜外針の構成を示す斜視図であり、図６は、低摩擦シリンジの構成を示す部分断面図である。以下の説明では、図５および図６中の上側を「基端」、下側を「先端」という。
【0014】
図１および図２に示すように、硬膜外麻酔用キット１は、硬膜外麻酔術に用いる複数種の処置具として、鉗子２と、複数の綿球３と、複数のカップ４と、硬膜外針５と、硬膜外カテーテル６と、コネクタ７と、フィルタ８と、低摩擦シリンジ９と、複数のガーゼ１０と、ドレッシング１１と、テープ１２と、複数のシリンジ１３と、複数の注射針１４とを有し、さらに、第１小トレー１００と、第２小トレー２００と、これら全てを収納する大トレー（容器）３００と、ドレープ１５と、シート１６と、包材１７とを有している。なお、図１では、包材１７を省略して示した。以下、各構成要素について説明する。
【0015】
大トレー３００は、その上部に上部開口３１０を有し、その内部には、略直方体状の収納空間３２０が形成されている。この収納空間３２０内には、図２に示す状態（以下、「使用前の状態」という。）で、前記処置具、第１小トレー１００および第２小トレー２００が収納されている。
【0016】
また、この大トレー３００は、例えば、硬膜外麻酔術の施行の際には、使用済みの前記処置具等を破棄するための容器としても使用することができる。これにより、廃棄物をま

とめることができるので、廃棄物の散逸をより確実に防止することができる。
【0017】
大トレー３００、後述する第１小トレー１００および第２小トレー２００の構成材料としては、それぞれ、例えば、紙、ポリ塩化ビニル、ポリエチレン、ポリプロピレン、ポリスチレン、ポリー（４－メチルペンテン－１）、ポリカーボネート、アクリル樹脂、アクリルニトリル－ブタジエン－スチレン共重合体、ポリエチレンテレフタレート等のポリエステル、ブタジエン－スチレン共重合体、ポリアミドのような各種樹脂等が挙げられるが、廃棄の容易性の点から、紙であるのが好ましい。
【0018】
大トレー３００内には、収納空間３２０の寸法より若干小さい第２小トレー２００が収納されている。
【0019】
この第２小トレー２００は、その上部開口縁部を囲むように鍔部２１０が外方に突出形成されている。また、第２小トレー２００の内部は、平面視形状が略Ｔ字状をなす仕切り部２２０により、収納空間２３１（図１中紙面左奥側）、収納空間２３２（図１中紙面左手前側）および収納空間２３３（図１中紙面右側）の３つの略直方体状の空間（部分）に区画されている。
【0020】
この仕切り部２２０を設けることにより、第２小トレー２００の強度をより向上することができる。また、仕切り部２２０は、第２小トレー２００内に収納される各処置具および第１小トレー１００が自由に移動してしまうのを防止する移動規制手段としての機能も有する。
【0021】
収納空間２３１内には、複数（本実施形態では３つ）のカップ４が重ねられて収納され、さらに、最も上部に位置するカップ４内に複数（本実施形態では３つ）の綿球３が収納されている。
【0022】
各綿球３および各カップ４は、例えば、後述する硬膜外針５で穿刺部位（例えば、患者の腰部等）を穿刺するのに先立って、該穿刺部位の表面（皮膚）を消毒する操作を行う際等に用いられる。
【0023】
硬膜外針５による穿刺部位の表面を消毒する場合、カップ４に消毒液を貯留する。そして、綿球３に消毒液を吸収させ、この綿球３を穿刺部位およびその周囲に押し当てることにより、消毒液を塗布する。なお、この操作は、後述する鉗子２で綿球３を摘んで行われる。
【0024】
このカップ４は、例えば、ポリ塩化ビニル、ポリエチレン、ポリプロピレン、ポリスチレン、ポリー（４－メチルペンテン－１）、ポリカーボネート、アクリル樹脂、アクリルニトリル－ブタジエン－スチレン共重合体、ポリエチレンテレフタレート等のポリエステル、ブタジエン－スチレン共重合体、ポリアミドのような各種樹脂等で構成され、好ましくは実質的に透明とされる。
【0025】
また、各カップ４の底部は、例えば１つの角部あるいは中心部等に向かって傾斜するテーパ面で構成することもできる。これにより、例えば、後述するシリンジ１３等で、カップ４内に貯留されている消毒薬を吸引する操作の際には、この操作をより効率よく行うことができる。
【0026】
なお、図示の構成では、各カップ４は、ほぼ等しい形状であるが、各カップ４の形状を異なるものとしてもよい。ただし、この場合でも、各カップ４は、重ねることが許容されるものとされる。これにより、例えば各カップ４にそれぞれ異なる種類の消毒液を貯留し

て用いる場合等には、視覚によりカップ４内の消毒液の種類を認識することができ便利である。

【0027】

また、このような観点からは、各カップ４に異なるマーカー（例えば、着色等）を施すようにしてもよい。

【0028】

収納空間２３１の図１中手前側には、隣接して収納空間２３２が形成されている。

この収納空間２３２内には、複数（本実施形態では３本）のシリンジ（ロック付きシリンジ）１３と、複数（本実施形態では３本）の注射針１４とが収納されている。

【0029】

各シリンジ１３は、例えば、前述したような消毒薬を吸引する操作の際や、麻酔薬を穿刺部位の表面下（皮下）あるいは硬膜外腔内に注入する操作の際等に用いられる。

【0030】

各シリンジ１３の先端部には、螺合により、各注射針１４を着脱自在に装着することができる。シリンジ１３の先端部に注射針１４を装着して、例えばバイアル、アンプル等の容器内から麻酔薬等をシリンジ１３内に吸引（採取）したり、後述する硬膜外針５による穿刺部位およびその周囲に局所麻酔（表面麻酔）を施したりすることができる。

【0031】

このようなシリンジ１３および注射針１４は、全て同じサイズのものが収納されていてもよいが、異なるサイズのものが含まれていてもよい。

【0032】

また、収納空間２３２には、その内方に仕切り部２２０が増大した針立て部２２１が形成されている。この針立て部２２１は、その外形が略直方体状とされ、その内部は、中空とされている。また、針立て部２２１の上面には、各注射針１４を立てた状態で保持可能である孔２２２が３つ形成されている。

【0033】

各注射針１４を、これらの孔２２２に挿入して、針立て部２２１に立て置くことにより、例えば、各注射針１４のサイズや、各注射針１４が使用済みか否か等をより容易かつ確実に見極めることができ便利である。

【0034】

なお、本実施形態では、孔２２２の数は、注射針１４の数に合わせて設けられているが、これに限定されず、適宜設定可能である。

【0035】

また、針立て部２２１の設置位置も、図示のものに限定されないことは言うまでもない。

【0036】

収納空間２３１および２３２の図１中右側には、これらの収納空間より大きい収納空間２３３が隣接して形成されている。

【0037】

この収納空間２３３内には、第１小トレー１００、複数のガーゼ１０、ドレッシング１１およびテープ１２が収納されている。

【0038】

第１小トレー１００は、その上部開口縁部を囲むように鍔部１１０が外方に突出形成されている。また、第１小トレー１００は、その内部に略直方体状の収納空間１２０が形成されている。

【0039】

第１小トレー１００を収納空間２３３内に設置したとき、鍔部１１０が第２小トレー２００の鍔部２１０および仕切り部２２０の頂部に係止して、第１小トレー１００の第２小トレー２００に対する上下方向の位置が規定される。

【0040】

また、図3および図４に示すように、第１小トレー１００の幅（図3および図４中長さＷ１）は、収納空間２３３の幅（図3および図４中長さＷ２）より小さく設定されている。したがって、第１小トレー１００を収納空間２３３内に設置したとき、第１小トレー１００と第２小トレー２００との間には、図3および図４中横方向において間隙Ｓ１が形成される。

【0041】

この間隙Ｓ１には、例えば硬膜外カテーテル６の患者への固定等に用いられるテープ１２が収納されている。

【0042】

また、図４に示すように、第１小トレー１００の高さ（図４中長さＨ１）は、収納空間２３３の深さ（図４中長さＨ２）より小さく設定されている。したがって、第１小トレー１００を収納空間２３３内に設置したとき、第１小トレー１００の底部の下面と、収納空間２３３（第２小トレー２００）の底部の上面との間には、間隙Ｓ２が形成される。

【0043】

この間隙Ｓ２には、複数のガーゼ１０およびドレッシング１１が積層されて収納されている。各ガーゼ１０は、例えば、患者の皮膚に塗布した余剰の消毒液や、後述する硬膜外針５の穿刺に伴って穿刺部位から出血する血液の拭き取りに用いたり、また、ドレッシング１１とともに後述する硬膜外カテーテル６の患者への固定に用いたりすることができる。

【0044】

なお、図3および図４では、第１小トレー１００および第２小トレー２００のみ示し、その他のものは省略した。

【0045】

さて、第１小トレー１００の収納空間１２０内には、硬膜外針５、硬膜外カテーテル６、コネクタ７、フィルタ８および低摩擦シリンジ９がまとめて収納されている。

【0046】

硬膜外カテーテル６は、麻酔薬を患者の硬膜外腔内に注入（導入）するために用いられるものであり、その先端部が患者の硬膜外腔に挿入され、一方、その基端部に、シリンジ１３の先端部やフィルタ８との接続を可能とするコネクタ７および異物（例えば、アンプル開封時に発生するガラス片等）除去のために用いられるフィルタ８が連結（接続）され、これらを介して、麻酔薬が患者の硬膜外腔内に注入される。

【0047】

また、硬膜外針５および低摩擦シリンジ９は、硬膜外カテーテル６を患者の硬膜外腔に挿入する操作の際に用いられるものである。

【0048】

この硬膜外針５は、図5に示すように、針５１と、この針５１に対して挿入・抜去が可能とされる芯材５２とを有している。

【0049】

針５１は、先端に先端開口５１２を有する中空の針本体５１１と、この基端部に固着されたハブ５１３とを有している。このハブ５１３には、後述する低摩擦シリンジ９の先端部が接続可能である。

【0050】

一方、芯材５２は、中実、棒状の芯材本体５２１と、この芯材本体５２１の基端部に固着されたハブ５２２とを有している。芯材本体５２１は、その寸法（長さ、太さ）および形状が針本体５１１の中空部にほぼ対応して形成されている。したがって、芯材本体５２１を針本体５１１に装填すると、先端開口５１２および針本体５１１の中空部は、芯材本体５２１により塞がれる。

【0051】

低摩擦シリンジ９は、硬膜外針５の針５１の先端部が硬膜外腔に到達したことを確認するために用いられる硬膜外腔確認用のシリンジであり、図6に示すように、外筒９１と、

外筒９１内で摺動するガスケット９２と、このガスケット９２を移動操作するプランジャ９３とを備えている。

【0052】

ガスケット９２は、外形が略円柱状の部材で構成され、その先端側外周部に、外径が先端方向に向って漸増した弾性変形可能なスカート部９２１が形成されている。また、ガスケット９２の基端部外周部には、ガスケット９２を外筒９１内に挿入したとき、ガスケット９２の中心軸と外筒９１の中心軸とのズレをより確実に防止するためのリング状の凸部（位置決め部）９２２が形成されている。

【0053】

このガスケット９２を外筒９１内に挿入したとき、スカート部９２１の先端部外面および凸部９２２の頂部付近が、それぞれ、外筒９１の内面に当接する。これにより、ガスケット９２（低摩擦シリンジ９）は、シリンジ内圧の増減により作用する軽微な力で外筒９１の軸方向（長手方向）に移動することができる優れた摺動性と、優れた密着性（特に、気密性）とを発揮する。

【0054】

このような硬膜外針５、硬膜外カテーテル６、コネクタ７、フィルタ８および低摩擦シリンジ９は、次のようにして使用される。

【0055】

〈１〉まず、硬膜外針５を針５１と芯材５２とを組立てた状態で、患者の腰部（穿刺部位）に穿刺する。

【0056】

〈２〉次に、硬膜外針５を所定長さ穿刺すると、芯材５２を針５１から引き抜く。

〈３〉次に、針５１のハブ５１３に、所定量の空気を収納した低摩擦シリンジ９を装着する。そして、針５１をさらに前進させると、針５１の先端開口５１２が患者の硬膜外腔に至る。このとき、硬膜外腔は、陰圧となっているので、低摩擦シリンジ９内の空気が硬膜外腔に流出して、低摩擦シリンジ９内の容積が減少する方向（先端方向）にガスケット９２およびプランジャ９３が移動する。これにより、針５１の先端開口５１２が硬膜外腔に達したことを確認できる。

【0057】

〈４〉次に、低摩擦シリンジ９を針５１から取り外し、針５１の基端から、硬膜外カテーテル６を挿通して、その先端を患者の硬膜外腔内に挿入する。

【0058】

〈５〉次に、針５１を患者から引き抜き、続いて、硬膜外カテーテル６の基端から引き抜いて取り外す。

【0059】

〈６〉次に、硬膜外カテーテル６の基端に、コネクタ７およびフィルタ８を、この順序で取り付ける。そして、麻酔薬を収納したシリンジ１３の先端部をフィルタ８に接続して、麻酔薬の注入を行う。

【0060】

なお、このとき、患者から外部に露出している部分の硬膜外カテーテル６は、ガーゼ１０、ドレッシング１１およびテープ１２を用いて患者の背中に固定される。これにより、硬膜外カテーテル６が患者から不本意に抜けてしまうのをより確実に防止することができる。

【0061】

以上のように、各処置具２～１４、第１小トレー１００および第２小トレー２００を収納した大トレー３００の上部には、綿球３を摘まんで穿刺部位およびその周囲を消毒する操作等に用いられる鉗子２が収納されている。なお、鉗子２に代わり、ピンセットが収納されていてもよい。

【0062】

さらに、鉗子２の上部には、大トレー３００の上部開口３１０を塞ぐようにしてドレー

プ１５が折りたたまれて設置されている。このドレープ１５は、硬膜外麻酔術の施行に先立って、患者に被せられるものである。

【0063】

なお、以下、各処置具２～１４、第１小トレー１００、第２小トレー２００、大トレー３００、鉗子２およびドレープ１５の集合体を「キット本体１’」と言う。

【0064】

このキット本体１’は、使用前の状態では、その全体が１枚のシート１６で包装され、さらに、包材１７内に密閉収納されており、これにより本発明の包装体が構成される。

【0065】

包材１７は、図２に示すように、対向する一対のシート材１７ａ、１７ｂを重ね、それらの外周部を融着（熱融着、高周波融着、超音波融着等）または接着（接着剤や溶剤による接着）によりシールしたものである。このシール部１７１で囲まれる空間に、シート１６で包装されたキット本体１’が収納されている。

【0066】

また、図２中、格子を施して示すように、シール部１７１の一部は、他の部分（シール部１７２）より接合強度（剥離強度）が弱い弱シール部（イージーピールシール部）１７３で構成されている。シール部１７２は、対向するシート材同士が完全に融着され、強固な接合状態であるのに対し、弱シール部１７３は、それより低温で融着する等により、対向するシート材同士の融着がある程度不完全であるような状態とされる。ただし、弱シール部１７３においても、気密性は、確保されている。そして、その効果は、経時的に持続する。

【0067】

すなわち、包材１７では、弱シール部１７３により、包材１７を開封する部分である開封口が構成されている。

【0068】

この包材１７および前記シート１６には、それぞれ、好ましくは、エチレンオキサイドガス、オートクレーブ、放射線、電子線等の滅菌に対応可能なガス透過性や耐熱性を有する材料、あるいは、滅菌後に無菌性を維持できる材料が用いられる。

【0069】

このような観点からは、シート材１７ａ、１７ｂおよびシート１６には、それぞれ、例えば、ポリエチレン、ポリプロピレン等のポリオレフィン樹脂、これらポリオレフィン樹脂のブレンド樹脂、ポリエチレンテレフタレート等のポリエステル樹脂、ポリ塩化ビニリデン、塩化ビニル－塩化ビニリデン共重合体等の単層フィルム、これらのフィルムにアルミニウム、シリカ等を蒸着したもの、アルミニウムフィルム、アルミニウムラミネートフィルム等の金属箔または金属箔を含むフィルムを使用することができる。さらには、これら各フィルムを２層以上積層したものを用いることもできる。また、シート材１７ａ、１７ｂおよびシート１６は、それぞれ、例えば、プラスチック製不織布や紙等を用いてもよい。

【0070】

これにより、このような硬膜外麻酔用キット１では、予め包材１７の内部に滅菌処理を施すことができ、包材１７が開封されるまで内部の無菌状態が確実に保持される。

【0071】

また、内部の視認性を確保するために、シート材１７ａ、１７ｂの少なくとも一方は、実質的に透明であるのが好ましい。

【0072】

このような包材１７を構成するシート材（単層または多層積層体）およびシート１６の厚さは、それぞれ、その層構成や用いる素材の特性（柔軟性、強度、水蒸気透過性、耐熱性等）等に応じて適宜決定され、特に限定されないが、通常は、６０～７００μｍ程度であるのが好ましく、１００～５００μｍ程度であるのがより好ましい。

【0073】

また、シート１６も予め滅菌処理が施されるため、硬膜外麻酔術の施行の際には、シート１６を展開して使用することにより、使用場所（例えば、手術室等）において清潔域（シート１６の部分）と不潔域（シート１６以外の部分）とを明確に区分けすることができ便利である。

【0074】

また、このような硬膜外麻酔用キット１では、硬膜外麻酔術の施行の最初に必要なドレープ１５、鉗子２、綿球３、カップ４等が上部に設置され、さらに、各処置具は、ほぼ同時期に使用されるものがまとめて第１小トレー１００、第２小トレー２００に収納されているので、この操作を、より迅速、容易かつ確実に進めることができ、使い勝手もよい。

【0075】

以上、本発明を図示の好適実施形態に基づいて説明してきたが、本発明はこれに限定されるものではなく、硬膜外麻酔用キットを構成する各部は、同様の機能を発揮し得る任意の構成のものと置換することができる。

【0076】

また、本発明では、任意の組み合わせの処置具（例えば、シリンジ、注射針およびカテーテル）を収納することができ、さらに、図示の構成以外のものを追加することもできる。また、本発明は、硬膜外麻酔用キット以外の処置具を収納することもできる。

【図面の簡単な説明】

【0077】

【図1】本発明の包装体の実施形態の分解状態を示す斜視図である。

【図2】本発明の包装体の実施形態の使用前の状態を示す斜視図である。

【図3】小トレーの収納状態を示す平面図である。

【図4】図３中Ａ－Ａ線断面図である。

【図5】硬膜外針の構成を示す斜視図である。

【図6】低摩擦シリンジの構成を示す部分断面図である。

【符号の説明】

【0078】

１	硬膜外麻酔用キット
１'	キット本体
２	鉗子
３	綿球
４	カップ
５	硬膜外針
５１	針
５１１	針本体
５１２	先端開口
５１３	ハブ
５２	芯材
５２１	芯材本体
５２２	ハブ
６	硬膜外カテーテル
７	コネクタ
８	フィルタ
９	低摩擦シリンジ
９１	外筒
９２	ガスケット
９２１	スカート部
９２２	凸部
９３	プランジャ
１０	ガーゼ

１１　ドレッシング
１２　テープ
１３　シリンジ
１４　注射針
１５　ドレープ
１６　シート
１７　包材
１７ａ、１７ｂ　シート材
１７１　シール部
１７２　弱シール部以外のシール部
１７３　弱シール部
１００　第１小トレー
１１０　鍔部
１２０　収納空間
２００　第２小トレー
２１０　鍔部
２２０　仕切り部
２２１　針立て部
２２２　孔
２３１　収納空間
２３２　収納空間
２３３　収納空間
３００　大トレー
３１０　上部開口
３２０　収納空間
Ｓ１、Ｓ２　間隙

【図1】

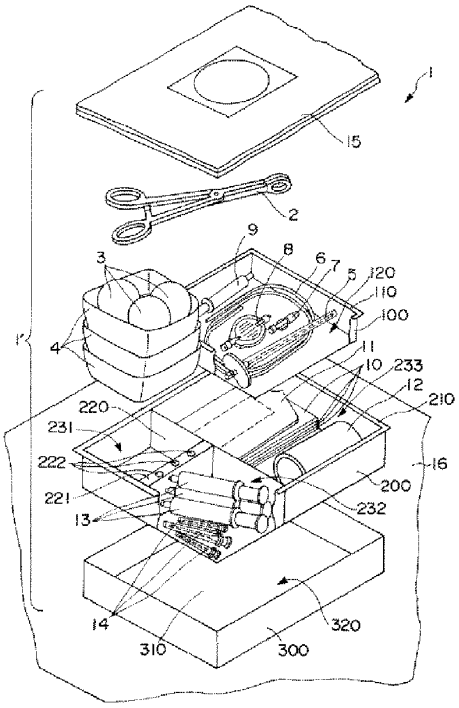
1
15
2
9
8
6
7
5
120
110
100
3
4
1'
11
10
233
12
210
220
231
222
16
200
221
232
13
14
310
300
320

【図2】

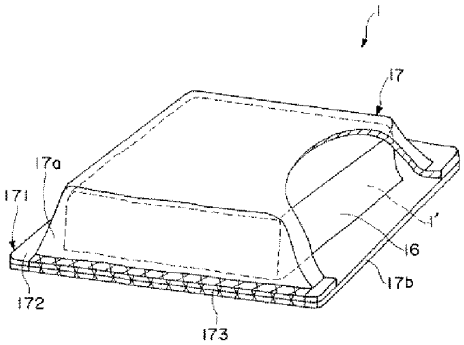
1
17
17a
171
1'
16
17b
172
173

【図3】

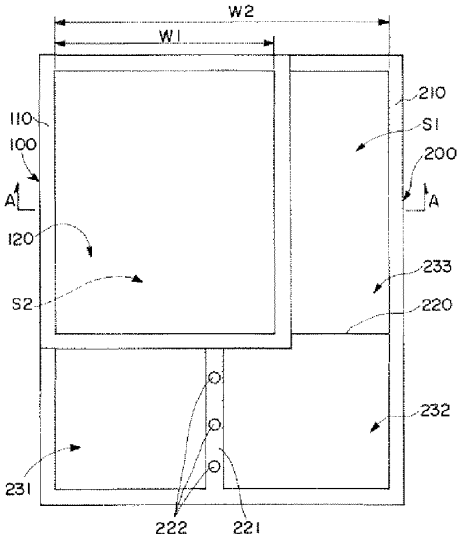
W2
W1
210
110
S1
100
200
A
A
120
233
S2
220
232
231
222
221

【図4】

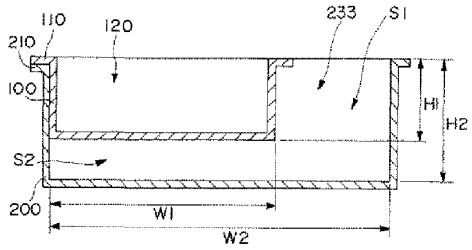
110
120
233
S1
210
100
H1
H2
S2
200
W1
W2

【図5】

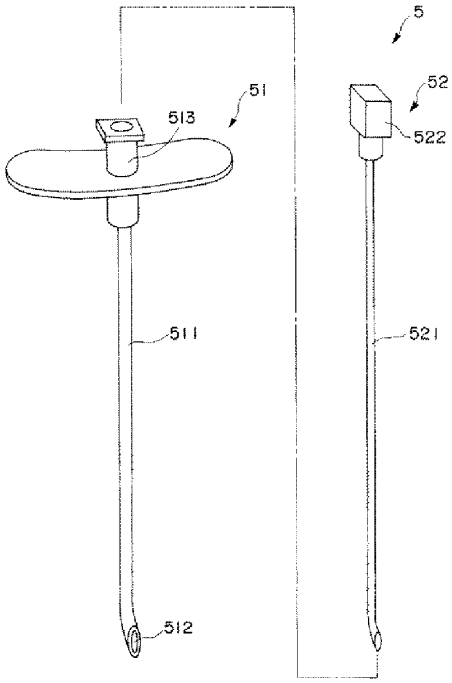

【図6】

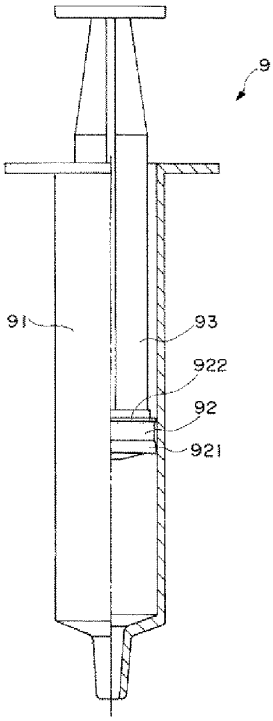

Electronic Acknowledgement Receipt

EFS ID:	47517677
Application Number:	16944667
International Application Number:	
Confirmation Number:	8322
Title of Invention:	Catheter Tray, Packaging System, Instruction Insert, and Associated Methods
First Named Inventor/Applicant Name:	Jennifer E. Tomes
Customer Number:	189038
Filer:	Philip Henry Burrus/Kayla Burrus
Filer Authorized By:	Philip Henry Burrus
Attorney Docket Number:	10055UCIP2D1C1C1C1C1C1
Receipt Date:	13-FEB-2023
Filing Date:	31-JUL-2020
Time Stamp:	16:07:39
Application Type:	Utility under 35 USC 111(a)

Payment information:

Submitted with Payment	no

File Listing:

Document Number	Document Description	File Name	File Size(Bytes)/ Message Digest	Multi Part /.zip	Pages (if appl.)
1	Non Patent Literature	10055U_CIP2_D1_USA_2022-6-15_NoticeOfReExam.pdf	194478 976cdfbafa986f108e5143589691f2b2de6cd8b	no	2

Warnings:

Information:					
2	Non Patent Literature	10055U_CIP2_D1_USA_2022-6-8_ReexamReq.pdf	6875490 3fddebbc8588f4bfc1ccbb5c4c45dc926dc0d49c	no	84
Warnings:					
Information:					
3	Non Patent Literature	10055U_CIP2_D1_USA_2022-6-8_Exhibit1.pdf	6364587 49bb10810c8690ec28db3b6b5292544b637db332	no	58
Warnings:					
Information:					
4	Non Patent Literature	10055U_CIP2_D1_USA_2022-6-8_Exhibit2.pdf	11946884 e57955abea137b83e5881061cb46ab41aaa19395	no	132
Warnings:					
Information:					
5	Non Patent Literature	10055U_CIP2_D1_USA_2022-6-8_Exhibit3.pdf	2501354 378ec471aefbaaf6bed75e46a8ae97cd881839b1	no	30
Warnings:					
Information:					
6	Non Patent Literature	10055U_CIP2_D1_USA_2022-6-8_Exhibit4_part1.pdf	24481364 ba5db1365c8fb21c87622f248f57af2c3bcacc50	no	327
Warnings:					
Information:					
7	Non Patent Literature	10055U_CIP2_D1_USA_2022-6-8_Exhibit4_part2.pdf	26159754 4babf193f0eed59277a44e6c5af5a38097492fd4	no	324
Warnings:					
Information:					
8	Non Patent Literature	10055U_CIP2_D1_USA_2022-6-8_Exhibit4_part3.pdf	11836015 b6f1623ff1e4878a0a225065bb0461fea8c32b0c	no	152
Warnings:					
Information:					

9	Non Patent Literature	10055U_CIP2_D1_USA_2022-6-8_Exhibit5.pdf	1205721 64fd49b7a09ad24e57d1edc73efbfcf5d19416c1	no	13
Warnings:					
Information:					
10	Non Patent Literature	10055U_CIP2_D1_USA_2022-6-8_Exhibit6.pdf	762912 77cd84a8e2fb361aaa43cbbdffde2171b914a52d	no	5
Warnings:					
Information:					
11	Non Patent Literature	10055U_CIP2_D1_USA_2022-6-8_Exhibit7.pdf	1761953 03cb951bb24b8bc07e6ce06005b0874199866f3f	no	14
Warnings:					
Information:					
12	Non Patent Literature	10055U_CIP2_D1_USA_2022-6-8_Exhibit8.pdf	590776 65a70cca9a6532ba7cc3c6376363cc52ab995abe	no	4
Warnings:					
Information:					
13	Non Patent Literature	10055U_CIP2_D1_USA_2022-6-8_Exhibit9.pdf	2646883 65730799e8682124c5609360564359844b4ae61a	no	21
Warnings:					
Information:					
14	Non Patent Literature	10055U_CIP2_D1_USA_2022-6-8_Exhibit10.pdf	1389639 611cbb2ef1c7f963d246cd55f33a4723d4ed16f5	no	12
Warnings:					
Information:					
15	Non Patent Literature	10055U_CIP2_D1_USA_2022-6-8_Exhibit11.pdf	2839017 4509524fe9bd70997b74d6198951737298ab377f	no	25
Warnings:					
Information:					

16	Non Patent Literature	10055U_CIP2_D1_USA_2022-6-8_Exhibit12.pdf	1091631 5a08fb1016be51f296f473bcbdf16e7a81d03e9b	no	9
Warnings:					
Information:					
17	Non Patent Literature	10055U_CIP2_D1_USA_2022-6-8_Exhibit13.pdf	522830 a3923307540431ed94bee5eee2107704392a7e7c	no	5
Warnings:					
Information:					
18	Non Patent Literature	10055U_CIP2_D1_USA_2022-6-8_Exhibit14.pdf	810043 4f0a8e637fcea6aee5c90805250ed6e2d33fc640	no	6
Warnings:					
Information:					
19	Non Patent Literature	10055U_CIP2_D1_USA_2022-6-8_Exhibit15.pdf	4347489 845d711b5babb96f5ce9a8c12a7c77bad4f4434e	no	44
Warnings:					
Information:					
20	Non Patent Literature	10055U_CIP2_D1_USA_2022-6-8_Exhibit16.pdf	624726 e8744da938b2c808624c0393a0945ff46a809269	no	5
Warnings:					
Information:					
21	Non Patent Literature	10055U_CIP2_D1_USA_2022-6-8_Exhibit17.pdf	6641813 82db0ccdb21063e710f55a6802d96406d1952904	no	59
Warnings:					
Information:					
22	Non Patent Literature	10055U_CIP2_D1_USA_2022-6-8_Exhibit18.pdf	3500022 158be631efd9558449f1d16c687c9c4745a83143	no	37
Warnings:					
Information:					

23	Non Patent Literature	10055U_CIP2_D1_USA_2022-6-8_Exhibit19.pdf	897144 5a825e32c41a484a326e1a8e564dca0707fcafec	no	14
Warnings:					
Information:					
24	Non Patent Literature	10055U_CIP2_D1_USA_2022-6-8_Exhibit20.pdf	1193413 a94993d02914f552280850f3b2221d2aa9e08a4a	no	15
Warnings:					
Information:					
25	Non Patent Literature	10055U_CIP2_D1_USA_2022-6-8_Exhibit21.pdf	4065070 671e7fb375d5de8c2ce957b9c462a6a2502b1f71	no	48
Warnings:					
Information:					
26	Non Patent Literature	10055U_CIP2_D1_USA_2022-6-8_Exhibit22.pdf	134415 b023abe09919ec3cdb8a4e2e9f769f587e82b3df	no	2
Warnings:					
Information:					
27	Non Patent Literature	10055U_CIP2_D1_USA_2022-6-8_Exhibit23.pdf	215735 32e014687f4869cba70bac957a469642182d2a5d	no	4
Warnings:					
Information:					
28	Non Patent Literature	10055U_CIP2_D1_USA_2022-6-8_Exhibit24.pdf	6591329 1a95d440e60d17f627dc975d6b1df007a09593cd	no	179
Warnings:					
Information:					
29	Non Patent Literature	10055U_CIP2_D1_USA_2022-6-8_Exhibit25.pdf	755310 9b56c3f68fabd2ad6276cf51d1c0c5c7ea9f50eb	no	13
Warnings:					
Information:					

30	Non Patent Literature	10055U_CIP2_D1_USA_2022-6-8_Exhibit26.pdf	371350 ba8531e7cc8cd547100a1b29add2e6db431e003b	no	7
Warnings:					
Information:					
31	Non Patent Literature	10055U_CIP2_D1_USA_2022-6-8_Exhibit27.pdf	232681 b4b48a1edc24ffd9d5aba12c6166991db9b004f7	no	5
Warnings:					
Information:					
32	Non Patent Literature	10055U_CIP2_D1_USA_2022-6-8_Exhibit28.pdf	3962921 b71b1125a6429c53158e1c456a892bb8be4cab42	no	57
Warnings:					
Information:					
			Total Files Size (in bytes):	137514749	

This Acknowledgement Receipt evidences receipt on the noted date by the USPTO of the indicated documents, characterized by the applicant, and including page counts, where applicable. It serves as evidence of receipt similar to a Post Card, as described in MPEP 503.

<u>New Applications Under 35 U.S.C. 111</u>
If a new application is being filed and the application includes the necessary components for a filing date (see 37 CFR 1.53(b)-(d) and MPEP 506), a Filing Receipt (37 CFR 1.54) will be issued in due course and the date shown on this Acknowledgement Receipt will establish the filing date of the application.
<u>National Stage of an International Application under 35 U.S.C. 371</u>
If a timely submission to enter the national stage of an international application is compliant with the conditions of 35 U.S.C. 371 and other applicable requirements a Form PCT/DO/EO/903 indicating acceptance of the application as a national stage submission under 35 U.S.C. 371 will be issued in addition to the Filing Receipt, in due course.
<u>New International Application Filed with the USPTO as a Receiving Office</u>
If a new international application is being filed and the international application includes the necessary components for an international filing date (see PCT Article 11 and MPEP 1810), a Notification of the International Application Number and of the International Filing Date (Form PCT/RO/105) will be issued in due course, subject to prescriptions concerning national security, and the date shown on this Acknowledgement Receipt will establish the international filing date of the application.

PTO/SB/08a (01-10)
Approved for use through 07/31/2012. OMB 0651-0031
U.S. Patent and Trademark Office; U.S. DEPARTMENT OF COMMERCE

Under the Paperwork Reduction Act of 1995, no persons are required to respond to a collection of information unless it contains a valid OMB control number.

INFORMATION DISCLOSURE STATEMENT BY APPLICANT (Not for submission under 37 CFR 1.99)		
	Application Number	16/944,667
	Filing Date	Jul 31, 2020
	First Named Inventor	Jennifer E. Tomes
	Art Unit	3781
	Examiner Name	Adam M Marcetich
	Attorney Docket Number	10055UCIP2D1C1C1C1C1C1

U.S.PATENTS

Examiner Initial*	Cite No	Patent Number	Kind Code [1]	Issue Date	Name of Patentee or Applicant of cited Document	Pages, Columns, Lines, Where Relevant Passages or Relevant Figures Appear
		3650393		1972-03-21	Reiss, Robert E.	
		4085845		1978-04-25	Perfect, Alan	
		4411656		1983-10-25	Cornett, Walter	
		4439184		1984-03-27	Wheeler, Robert P.	
		4554156		1985-11-19	Fischer, Herbert	
		5887749		1999-03-30	Schommer, Philip	
		9693756		2017-07-04	Tomes, Jennifer	
		9745088		2017-08-29	Tomes, Jennifer	
		9808596		2017-11-07	Tomes, Jennifer	
		10512752		2019-12-24	Tomes, Jennifer	
		10946169		2021-03-16	Lockwood, Robert	

PTO/SB/08a (01-10)
Approved for use through 07/31/2012. OMB 0651-0031
U.S. Patent and Trademark Office; U.S. DEPARTMENT OF COMMERCE

Under the Paperwork Reduction Act of 1995, no persons are required to respond to a collection of information unless it contains a valid OMB control number.

INFORMATION DISCLOSURE STATEMENT BY APPLICANT (Not for submission under 37 CFR 1.99)		
	Application Number	16/944,667
	Filing Date	Jul 31, 2020
	First Named Inventor	Jennifer E. Tomes
	Art Unit	3781
	Examiner Name	Adam M Marcetich
	Attorney Docket Number	10055UCIP2D1C1C1C1C1C1

		10946992		2021-03-16	Tomes, Jennifer	
U.S.PATENT APPLICATION PUBLICATIONS						
Examiner Initial*	Cite No	Publication Number	Kind Code 1	Publication Date	Name of Patentee or Applicant of cited Document	Pages, Columns, Lines, Where Relevant Passages or Relevant Figures Appear
		20060011506		2006-01-19	Riley, Kimberly	
		20070197998		2007-08-23	Itou, Yasushi	
		20080125722		2008- 05-29	Hess, Brian	
		20100272669		2010-10-28	Malessa, Ralf	
		20110017621		2011-01-27	Zoland, Mark	
		20110225726		2011-09-22	Dominguez, Angel	
		20110284410		2011-11-24	Lockwood, Robert	
		20120267272		2012-10-25	Agrawal, Sony	
FOREIGN PATENT DOCUMENTS						

PTO/SB/08a (01-10)
Approved for use through 07/31/2012. OMB 0651-0031
U.S. Patent and Trademark Office; U.S. DEPARTMENT OF COMMERCE

Under the Paperwork Reduction Act of 1995, no persons are required to respond to a collection of information unless it contains a valid OMB control number.

INFORMATION DISCLOSURE STATEMENT BY APPLICANT (Not for submission under 37 CFR 1.99)		
	Application Number	16/944,667
	Filing Date	Jul 31, 2020
	First Named Inventor	Jennifer E. Tomes
	Art Unit	3781
	Examiner Name	Adam M Marcetich
	Attorney Docket Number	10055UCIP2D1C1C1C1C1C1

Examiner Initial*	Cite No	Foreign Document Number[3]	Country Code[2]	Kind Code[4]	Publication Date	Name of Patentee or Applicant of cited Document	Pages,Columns,Lines where Relevant Passages or Relevant Figures Appear	T[5]
		2000281144	JP		2000-10-10	Shimura, Kenichi		
		2002068309	JP		2002-03-08	Nishizawa, Yasushi et al.		

NON-PATENT LITERATURE DOCUMENTS

Examiner Initials*	Cite No	Include name of the author (in CAPITAL LETTERS), title of the article (when appropriate), title of the item (book, magazine, journal, serial, symposium, catalog, etc.), date, page(s), volume-issue number(s), publisher, city and/or country where published.	T[5]
		C. R. Bard, Inc. v. Medline Industries, Inc., 2020-1900, 2020-1905, 2020-1908, 2020-1910 Slip Opinion (Fed. Cir. 2021). Dated August 13, 2021,	
		JP2000281144-A Machine translation 17 Oct 2022; Cited in USSN 16/721,718 on October 26, 2022,	
		JP2002068309-A Machine translation 17 Oct 2022; Cited in USSN 16/721,718 on October 26, 2022,	
		"Ex Parte Reexamination Request", Reexmination Control No 90/015,051 for Patent No. 9522753; Mailed June 28, 2022; Request and Exhibits 1-28,	
		"Request for Ex Parte Reexamination", Reexam Control No. 90/014,964 for Patent No. 8,448,786; Mailed March 8, 2022; Request and Exhibits 1-35,	

PTO/SB/08a (01-10)
Approved for use through 07/31/2012. OMB 0651-0031
U.S. Patent and Trademark Office; U.S. DEPARTMENT OF COMMERCE

Under the Paperwork Reduction Act of 1995, no persons are required to respond to a collection of information unless it contains a valid OMB control number.

INFORMATION DISCLOSURE STATEMENT BY APPLICANT (Not for submission under 37 CFR 1.99)		
	Application Number	16/944,667
	Filing Date	Jul 31, 2020
	First Named Inventor	Jennifer E. Tomes
	Art Unit	3781
	Examiner Name	Adam M Marcetich
	Attorney Docket Number	10055UCIP2D1C1C1C1C1C1

		KLEIN, BENJAMIN , "Non-Final Office Action", USSN 16/688,185; Filed November 19, 2019; Attorney Docket No. BPMDL10055U P1C2D1; Mailed January 31, 2023,	
		MARCETICH, ADAM , "NonFinal Office Action", USSN 16/833,575; Filed March 28, 2020; Attorney Docket 10055U CIP2 D1C1C1C1C1; Mailed September 13, 2022,	
		MARCETICH, ADAM M. , "Notice of Allowance", USSN 16/721,718; Filed December 19, 2019; Attorney Docket No. 10055U CIP3 C1 C1 C1; Mailed October 26, 2022,	
		MARCETICH, ADAM M. , "Notice of Allowance", USSN 16/721,718; Filed December 19, 2019; Attorney Docket No. 10055U CIP3 C1 C1 C1; Mailed February 9, 2023,	
		POON, ROBERT , "Final Office Action", USSN 16/258,231; Filed January 25, 2019; Attorney Docket No. 10055U D1 C2 C1; Mailed October 7, 2021,	
		POON, ROBERT , "Final Office Action", USSN 16/986,803; Filed August 6, 2020; Attorney Docket 1037-001-03US; Mailed July 5, 2022,	
		POON, ROBERT , "Final Office Action", USSN 17/180,680; Filed February 19, 2021; Attorney Docket No. 1037-002-10US; Mailed September 16, 2022,	
		POON, ROBERT , "NonFinal Office Action", USSN 17/835,747; Filed June 8, 2022; Attorney Docket NO. 10055U D1 C2 C1 C1; Mailed October 12, 2022,	

Under the Paperwork Reduction Act of 1995, no persons are required to respond to a collection of information unless it contains a valid OMB control number.

INFORMATION DISCLOSURE STATEMENT BY APPLICANT (Not for submission under 37 CFR 1.99)		
	Application Number	16/944,667
	Filing Date	Jul 31, 2020
	First Named Inventor	Jennifer E. Tomes
	Art Unit	3781
	Examiner Name	Adam M Marcetich
	Attorney Docket Number	10055UCIP2D1C1C1C1C1C1

		POON, ROBERT , "Non-Final Office Action", USSN 17/180,680; Attorney Docket No. 1037-002-10US; Mailed December 22, 2021,	
		REIP, DAVID O. , "Re-Exam Non-Final Office Action", USSN 90/015,051; Filed June 8, 2022; Reference No. 10055U CIP2 D1; Mailed December 14, 2022,	
		REIP, DAVID OWEN , "Ex Parte Reexamination Order - Request Granted", Reexam Control No. 90/014,964 for Patent No. 8,448,786; Mailed April 19, 2022,	
		REIP, DAVID OWEN , "Ex Parte Reexamination Order - Request Granted", Reexmination Control No 90/015,051 for Patent No. 9522753; Mailed July 7, 2022,	
		REIP, DAVID OWEN , "Reexam NonFinal Office Action", USSN 90/014,964; Filed February 24, 2022; Attorney Docket 10055U CIP2 48010-28031.00; Mailed September 29, 2022,	

EXAMINER SIGNATURE

Examiner Signature		Date Considered	

*EXAMINER: Initial if reference considered, whether or not citation is in conformance with MPEP 609. Draw line through a citation if not in conformance and not considered. Include copy of this form with next communication to applicant.

[1] See Kind Codes of USPTO Patent Documents at www.USPTO.GOV or MPEP 901.04. [2] Enter office that issued the document, by the two-letter code (WIPO Standard ST.3). [3] For Japanese patent documents, the indication of the year of the reign of the Emperor must precede the serial number of the patent document.
[4] Kind of document by the appropriate symbols as indicated on the document under WIPO Standard ST.16 if possible. [5] Applicant is to place a check mark here if English language translation is attached.

PTO/SB/08a (01-10)
Approved for use through 07/31/2012. OMB 0651-0031
U.S. Patent and Trademark Office; U.S. DEPARTMENT OF COMMERCE

Under the Paperwork Reduction Act of 1995, no persons are required to respond to a collection of information unless it contains a valid OMB control number.

INFORMATION DISCLOSURE STATEMENT BY APPLICANT (Not for submission under 37 CFR 1.99)		
	Application Number	16/944,667
	Filing Date	Jul 31, 2020
	First Named Inventor	Jennifer E. Tomes
	Art Unit	3781
	Examiner Name	Adam M Marcetich
	Attorney Docket Number	10055UCIP2D1C1C1C1C1C1

CERTIFICATION STATEMENT

Please see 37 CFR 1.97 and 1.98 to make the appropriate selection(s):

☐ That each item of information contained in the information disclosure statement was first cited in any communication from a foreign patent office in a counterpart foreign application not more than three months prior to the filing of the information disclosure statement. See 37 CFR 1.97(e) (1).

OR

☐ That no item of information contained in the information disclosure statement was cited in a communication from a foreign patent office in a counterpart foreign application, and, to the knowledge of the person signing the certification after making reasonable inquiry, no item of information contained in the information disclosure statement was known to any individual designated in 37 CFR 1.56(c) more than three months prior to the filing of the information disclosure statement. See 37 CFR 1.97(e) (2).

☐ See attached certification statement.

☒ Fee set forth in 37 CFR 1.17 (p) has been submitted herewith.

☐ None

SIGNATURE

A signature of the applicant or representative is required in accordance with CFR 1.33, 10.18. Please see CFR 1.4(d) for the form of the signature.

Signature	/Philip H. Burrus, IV/	Date (YYYY-MM-DD)	2023-02-09
Name/Print	Philip H. Burrus	Registration Number	45,432

This collection of information is required by 37 CFR 1.97 and 1.98. The information is required to obtain or retain a benefit by the public which is to file (and by the USPTO to process) an application. Confidentiality is governed by 35 U.S.C. 122 and 37 CFR 1.14. This collection is estimated to take 1 hour to complete, including gathering, preparing and submitting the completed application form to the USPTO. Time will vary depending upon the individual case. Any comments on the amount of time you require to complete this form and/or suggestions for reducing this burden, should be sent to the Chief Information Officer, U.S. Patent and Trademark Office, U.S. Department of Commerce, P.O. Box 1450, Alexandria, VA 22313-1450. DO NOT SEND FEES OR COMPLETED FORMS TO THIS ADDRESS. **SEND TO: Commissioner for Patents, P.O. Box 1450, Alexandria, VA 22313-1450.**

PACKAGING BODY

DOCUMENT ID	DATE PUBLISHED
JP-2000281144-A	2000-10-10

INVENTOR INFORMATION

NAME	CITY	STATE	ZIP CODE	COUNTRY
SHIMURA KENICHI	N/A	N/A	N/A	N/A
NAKAGAWA YUJI	N/A	N/A	N/A	N/A
IMAI MASAOMI	N/A	N/A	N/A	N/A

DATE FILED
1999-03-26

CPC CURRENT

TYPE	CPC	DATE
CPCI	A61M25/002	2013-01-01

Abstract

PROBLEM TO BE SOLVED: To manufacture a packaging body bringing an instrument into contact with a liquid simply and sterilely and preventing the dissipation of odor to the outside, pollution, infection and the like after the use of the instrument. SOLUTION: A packing material 2 for a packaging body 1 is manufactured by being fusion bonded with a sheet material, and a first space 4 and a second space 5 parted by a partition 22 are formed therein. A weak sealing section 23 is formed on the partition 22. A catheter 7 and a deodorizing agent 8 stored in a container 81 provided with breathability are stored in the first space 4. A fluid substance 10 is stored in the second space 5. When the seal sealing section 23 is peeled off and the fluid substance 10 is made to flow into the first space 4 and brought into contact with the catheter 7, the surface of the catheter 7 is wetted to reduce the friction resistance.

Description

DETAILED DESCRIPTION OF THE INVENTION
[0001]
BACKGROUND OF THE INVENTION 1. Field of the Invention The present invention relates to a package for packaging a device such as a catheter.
[0002]
2. Description of the Related Art Catheters to be inserted into trachea, digestive tract, urethra, blood vessels, other body cavities, various organs, living tissues, etc.
On the surface of a medical device such as a guide wire inserted into the catheter, a large number of thrombus, tissue adhesion or foreign body reaction is generally confirmed. Therefore, it is necessary to reduce the damage to the living tissue and securely insert it into the target site. Further, in order to suppress mucosal inflammation and mucosal damage during indwelling in a living tissue, it is necessary to impart lubricity to the device surface.

For this reason, a low friction material is used as a base material, or water, a physiologically isotonic liquid or a lubricant is applied to the surface of the device prior to use. To elaborate,
The base material of the catheter has a multilayer laminated structure, and the outermost layer (or innermost layer) is made of a low friction material such as fluororesin or polyethylene resin, and the surface of the device is lubricated with water, physiological isotonic solution, glycerin, oil, etc. Agent is applied.
However, in selecting the material of the catheter base material, there is a limit in improving the slidability, and it is difficult to reach a satisfactory level.
[0005] Further, when a lubricant or the like is applied, if the product is to be commercialized while being brought into contact with the medical device, the lubricant may be used for a long time before the medical device is used. There is concern about deterioration, deterioration, peeling off from the surface of the medical device, etc., and there have been problems in terms of stability (preservability) and associated safety.
Further, it is very difficult to aseptically contact a medical device and a lubricant during use, and there is a problem that bacterial infection or the like may occur.
In an emergency, since maintaining the life of the patient is the highest priority, the operation of applying the lubricant becomes troublesome. In some cases, the lubricant is not applied and the surface is kept dry. May be used in
[0008] As a method for causing a compound which exhibits lubricity when wetted on the surface of a medical device to be present, an international application WO 9
In 001344, at least one of an alkali metal alcoholate, an amino group, an alkali metal amide group, a carboxylic acid group, a sulfonic acid group, a magnesium halide group and a fluorine-boron complex group is introduced into the polyurethane surface by a coating operation. By operation,
A technique for immobilizing a hydrophilic polymer that can react with these functional groups on the surface is disclosed.
[0009] Similarly, a method of causing a compound which exhibits lubricity when wetted on the surface of a medical device to be present is disclosed in Japanese Patent Publication No. 6-32652, Japanese Patent Application Laid-Open No. 6-7426, International Application WO9219289, Japanese Patent Application Publication No. -502854, Tokiohei 10-502855, Tokiohei 10-502856
No., etc. are also disclosed.
[0010] However, in these methods, lubricating properties are not exhibited by drying, and the medical device is taken out of the packaging material at the time of use, and a liquid such as water or a physiologically isotonic solution is put on the surface of the medical device. The operation of supplying and contacting is essential. Moreover, it is very difficult to perform this operation aseptically, except when using special operations or facilities.
For this reason, as described above, there is a risk of infection, and in an emergency, it may be inserted directly into the trachea, digestive tract, urethra, blood vessels, etc. in a dry state, and there is concern that mucous membranes may be damaged. Was to be done.
On the other hand, when blood comes in contact with foreign substances other than vascular endothelial cells, adhesion of plasma proteins and platelets and blood coagulation are induced on the surface of the foreign substances, and thrombus is formed. This thrombus formation becomes a problem when using medical devices such as catheters and guide wires.
For this reason, blood anticoagulants such as heparin are administered to blood, or blood anticoagulants are applied to the surface of medical instruments, or antithrombotic materials are used as base materials. Have been done.
[0013] However, in the former case, harmful effects such as bleeding tendency are caused to the patient, and in the latter case, a contact operation with a liquid is required at the time of use. , As described above, in that it is very difficult.
Further, in an emergency, since maintaining the life of the patient is the highest priority, the patient may be directly used without performing an anticoagulant operation, and there is a concern that there may be an adverse effect due to thrombus formation.
After use of these medical instruments, they are discarded as medical waste. Usually, inactivation operations (disinfection / sterilization operations) of bacteria, viruses and the like in body fluids and blood are performed.

It was discarded without infective or deodorizing operations, while remaining infectious or allowing odor release.
[0016] For this reason, after the medical device is used and before it is incinerated, the odor may be radiated or body fluids such as urine and blood may leak out, resulting in contamination or infection of the surroundings.
[0017]
SUMMARY OF THE INVENTION The present invention has been made in view of the above-mentioned problems, and an object of the present invention is to enable simple and aseptic contact between an instrument and a liquid, and to use the instrument. It is another object of the present invention to provide a package capable of preventing the emission of odor to the outside, contamination, infection and the like.
[0018]
This and other objects are achieved by the present invention which is defined below as (1) to (15).
(1) A packaging material having a first space and a second space which are separated from each other by a partition portion and can communicate with each other when necessary, and are stored in the first space and inserted or attached to a living body for use. A device that is stored in the first space and eliminates or reduces odor, and a flow that is stored in the second space and can contact the surface of the device and reduce its frictional resistance. A package comprising: a conductive substance.
(2) The package according to the above (1), wherein the main component of the substance that extinguishes or reduces the odor is titanium oxide.
(3) A packaging material having a first space and a second space which are separated from each other by a partition portion and can communicate with each other when necessary, and are stored in the first space and inserted or attached to a living body for use. A device that is stored in the first space and has a function of suppressing at least the growth of microorganisms; and a device that is stored in the second space and contacts the surface of the device to reduce its frictional resistance. And a flowable substance.
(4) The package according to (3), wherein the main component of the substance having a function of suppressing the growth of microorganisms is titanium oxide.
(5) A packaging material having a first space, a second space, and a third space which are separated from each other by a partition portion and can communicate with each other when necessary, and are housed in the first space and inserted into a living body. Or a device to be mounted and used, a fluid substance stored in the second space, which can be brought into contact with the surface of the device to reduce its frictional resistance, and a fluid material stored in the third space, A substance capable of absorbing and retaining a liquid.
(6) A packaging material having a first space, a second space, and a third space which are separated from each other by a partition portion and can communicate with each other when necessary, and a packaging material which is housed in the first space and inserted into a living body. Alternatively, it is characterized by comprising a device to be worn and used, a blood anticoagulant stored in the second space, and a substance stored in the third space and capable of absorbing and retaining a liquid. Packaging.
(7) The above (5), wherein the first space and the second space are formed adjacent to each other, and the first space and the third space are formed adjacent to each other.) Or the package according to (6).
(8) The package according to any one of (1) to (7), wherein the second space is formed inside the first space.
(9) The package according to any one of the above (1) to (8), wherein the partition portion is constituted by a seal portion formed by fusing a sheet material constituting the packaging material.
(10) The package according to any one of the above (1) to (9), wherein at least a part of the partition portion is constituted by a weak seal portion having a lower joint strength than other portions.
(11) The above-mentioned (1) to (1), further comprising an opening portion for taking out the device from the first space, and sealing means for sealing the opening after opening the opening portion.
0) The package according to any one of the above.
(12) The package according to any one of the above (1) to (11), wherein the packaging material has a steam barrier property.
(13) The package according to any one of (1) to (12), wherein the device is a catheter or a guide wire.
(14) The package according to any one of (1) to (12) above, wherein the device is a catheter used by being inserted into the urethra.

(15) The package according to any one of the above (1) to (14), wherein a compound that develops lubricity by wetting is provided on at least a part of the surface of the device.
[0034]
DETAILED DESCRIPTION OF THE PREFERRED EMBODIMENTS Hereinafter, a package according to the present invention will be described in detail based on preferred embodiments shown in the accompanying drawings.
FIG. 1 is a plan view (an internal perspective view) showing a first embodiment of the package of the present invention. As shown in FIG. 1, a package 1 includes a packaging material 2 having a first space and a second space.
have.
The packaging material 2 is a bag-like material obtained by sealing a sheet material as described later in a desired pattern by fusing (or bonding). A band-shaped seal portion 21 is formed on the outer peripheral portion of the packaging material 2 and the like.
A partition 22 is formed in the middle of the packaging material 2. The partition 22 is formed by fusing (or adhering) a sheet material in a band shape similarly to the seal portion 21. The partition 22 divides the inside of the packaging material 2 into a first space 4 and a second space 5 (isolated from each other).
As shown by hatching in FIG.
A part of 2 is composed of a weak seal part (easy peel seal part) 23 having lower bonding strength (peeling strength) than the other part (seal part 21). By peeling (breaking) the weak seal portion 23, the first space 4 and the second space 5 are separated.
Communicates with
The sealing portion 21 has a completely joined state in which the opposing sheet materials are completely fused together, while the weak sealing portion 23 has a structure in which the opposing sheet materials are fused at a lower temperature. The state is such that the fusion between them is incomplete to some extent. However, the liquid tightness (airtightness) is ensured also in the weak seal portion 23. And the effect lasts over time.
To peel (break) the weak seal portion 23,
Pressing (pressing) a portion of the packaging material 2 that defines the second space 5
However, it becomes possible by increasing the internal pressure of the second space 5. In addition, the weak seal portion 23 may be rubbed and loosened by hand, or these methods may be used in combination. Thus, the first space 4 and the second space 5 can be communicated with each other with a very simple operation.
It should be noted that the weak seal portion 23 is connected to the partition
Or may be formed at more than
2 may be formed over almost the entirety.
The sealing portion 2 at the upper end of the packaging material 2 in FIG.
1, a weak seal portion (opening portion) 24 similar to the weak seal portion 23 is formed. The weak seal portion 24 is peeled (ruptured), the packaging material 2 is opened, and the stored items in the first space 4 can be taken in and out.
A zipper (sealing means) 3 which can be opened and closed is provided near the upper end side of the weak seal portion 24 in FIG. Even after the weak seal portion 24 has been peeled (ruptured) and the packaging material 2 has been opened, the zipper 3 can be closed to seal the opening. When the zipper 3 is opened, the opening can be opened again.
The zipper 3 may be of any known configuration, such as a zipper formed of grooves and projections that fit together.
The first space 4 contains a device to be inserted into or attached to a living body, and a substance for eliminating or reducing odor. A catheter or a guide wire is preferably used as an instrument to be inserted or attached to a living body. In the present embodiment, a catheter 7 and a deodorant (deodorant) 8 are housed in the first space 4. I have.
The catheter 7 is inserted into, for example, the trachea, digestive tract, urethra, vagina, blood vessels, lymph vessels, bile ducts, other body cavities, various organs such as lungs, hearts, kidneys, and other living tissues. Although various catheters and balloon catheters can be mentioned, catheters (urethral catheters, urinary catheters) used by inserting into the urethra are particularly preferable.

The urinary drainage method for dysuria is preferably an aseptic intermittent urinary drainage method instead of an indwelling catheter. In recent years, self-urinary drainage, in which a patient himself discharges urine using a catheter, has become widespread as an effective treatment method. . Urinary dysfunction is caused by obstruction of the urethra due to benign prostatic hyperplasia, stones, tumors, and neuropathic bladder caused by disorders of the brain, spinal cord, and pelvic nerves. It is necessary to drain urine regularly because the internal pressure increases and places a burden on the kidneys. The self-guided urinary method performed at this time has the advantages of completely excreting urine at low pressure, reducing existing urinary infections, relieving urinary frequency, urinary incontinence, and not burdening the bladder and kidneys. The patient inserts a catheter into the bladder through the urethra about 4 to 6 times a day, and removes the urine when the urine has been discharged. The frequency is, for example, 4
Every 5 hours, the night is before bedtime.
The surface of the catheter 7 is preferably provided with, for example, a substance which exhibits lubricity when wet. Examples of such a substance include, for example, JP-A-60-2
59269 and Japanese Patent Application Laid-Open No. 1-195863. Further, for example, Japanese Patent Publication No. 6-32652, Japanese Patent Application Laid-Open No. 6-7426,
International application WO8802623, International application WO89075
21, international application WO8909246, international application WO90
01344, International application WO9219289, International application W
O9311751, International application WO9529722, JP-T10-502854, JP-T10-502855
And the materials and methods disclosed in JP-A-10-502856. Such a substance exists on the surface of the catheter 7 in a non-wetting state (dry state).
Such a substance is a polymer chemically bonded to the surface of the base material of the catheter 7, and peeling from the surface of the base material of the catheter 7 is caused by elution into water, a physiological isotonic solution, other lubricants, or the like. Are less likely to occur from the viewpoints of lubricity continuity and safety.
As the deodorant (deodorant) 8, any of commercially available deodorants, deodorants, fragrances and the like may be used. In this case, the odor removing mechanism of the deodorant 8 also includes a physical deodorizing method (porous substances such as activated carbon and zeolite) and a chemical deodorizing method (various organic and inorganic compounds, plant extracts, ozone, noble metal-based oxidation). Catalyst), biological deodorization method (microorganisms, artificial enzymes), sensory deodorization method (aromatic compounds, vegetable oil)
For example, any device that can be stored in the first space 4 may be used.
A particularly preferred deodorizing agent 8 is titanium oxide (TiO .sub.2). This titanium oxide has the following advantages.
1) It is a harmless inorganic oxide and can be harmonized with the environment. 2) As a result of ultraviolet light excitation, it has strong oxidizing power and can decompose the adsorbed organic matter at room temperature. 3) The adsorbed oxygen is changed into oxygen radicals, and the organic substances adsorbed by the radicals can be decomposed at room temperature. 4) The effects of 2) and 3) above are caused by the illumination light of the daily living space.
Due to such excellent functions of titanium oxide, not only a deodorizing effect but also an antibacterial and antifungal effect can be obtained. Preferably, such titanium oxide is supported on a base material of organic synthetic fibers such as paper and nonwoven fabric, and fibers composed of an organic compound such as pulp.
The deodorant 8 is contained in a container (packaging material) 81 having air permeability. The container 81 is preferably made of a material that allows gas to permeate but does not allow liquid to permeate. Such a container 8
Examples of the constituent material 1 include a water-impermeable porous body such as a polyethylene nonwoven fabric and a polytetrafluoroethylene porous body.
The second space 5 contains (fills) a flowable substance (liquid or semi-liquid substance) 10 which can come into contact with the surface of the catheter 7 and reduce its frictional resistance.
Examples of the fluid substance 10 include water, physiologically isotonic solutions (physiological saline), oils such as glycerin, silicone oil and olive oil, xylocaine jelly and the like (hereinafter, these are collectively referred to as “lubricating oil”). Agent ").

In the case where the surface of the catheter 7 is provided with a substance that exhibits lubricity by wetting as described above, the fluid substance 10 may be any substance that can wet this substance. Typical examples thereof include water, physiologically isotonic solution (physiological saline), glycerin aqueous solution, and the like.
The packaging material 2 (preferably the entire packaging material 2) is
It preferably has air barrier properties. Here, the steam bath
The term “rear” means that the water vapor permeability is preferably 30 g / m 2.
.sup.Two 24hrs 25μm thickness 40 ℃ 90% RH or less
Below, more preferably 10 g / m.sup.Two 24hrs 25μ
m thickness 40 ℃ 90% RH or less, more preferably 1g
/ M.sup.Two 24hrs 25μm thickness 40 ℃ 90% RH
Say that: This water vapor permeability is measured according to JIS
It is measured by the method described in K7129 (Method A).
As described above, since the packaging material 2 has a water vapor barrier property, evaporation of moisture from the interior of the packaging material 2, particularly from the second space 5, can be prevented. As a result, it is possible to prevent the liquid material (fluid substance 10 and the like) in the second space 5 from being reduced and concentrated, and the amount of the liquid material is required to be a minimum necessary amount. Weight can be reduced. In addition, it is possible to prevent water vapor from entering the first space 4 from the outside of the packaging material 2 or from the second space 5.
A sheet material (film) constituting the packaging material 2;
In particular, as the sheet material having the steam barrier property,
For example, polyethylene, polypropylene and other polyolefin resins, blended resins of these polyolefin resins,
Polyester resins such as polyethylene terephthalate, polyvinylidene chloride, single-layer films such as vinyl chloride-vinylidene chloride copolymer, aluminum and silica vapor-deposited on these films, aluminum films, A metal foil such as an aluminum laminate film or a film containing a metal foil can be used. Moreover, Those obtained by laminating two or more of these films can also be used.
In the weak seal portions 23 and 24,
The layer (sealant layer) directly involved in fusion is composed of a blend resin of two or more incompatible polyolefin resins or a random or block copolymer having two or more incompatible polyolefins in segments. Is preferred.
In the present invention, it is preferable that the entire packaging material 2 or at least a portion defining the second space 5 of the packaging material 2 is formed of a sheet material having a water vapor barrier property.
Such sheet materials include, for example, [1] a single-layer film composed of one kind of polyolefin resin, [2] a single-layer film composed of a blend resin of two or more incompatible polyolefin resins, 3] A multilayer film of a polyolefin resin or polyester resin using a polyolefin resin (a blended resin of a polyolefin resin can also be used) for the sealant layer (layer involved in fusion).
In order to obtain a higher water vapor barrier property, for example, [4] a film in which the sealant layer is composed of a polyolefin resin (a blended resin of a polyolefin resin can also be used), and a polyolefin or polyester whose outer layer is coated with polyvinylidene chloride Multilayer film composed of films, etc., [5] Sealant layer composed of polyolefin resin (blend resin of polyolefin resin can also be used), Polyolefin film or polyester film with outer layer deposited by aluminum or silica Multilayer film.
Further, in order to obtain an extremely high water vapor barrier property, for example, [6] the sealant layer is made of a polyolefin resin (a blended resin of a polyolefin resin can also be used).
A multilayer film composed of an aluminum film as the intermediate layer and a polyester film as the outermost layer. In this case, one of the pair of sheet materials facing each other is an opaque aluminum film,
The other is preferably a transparent water vapor barrier film such as a vapor-deposited silica film, because the contents of the packaging material 2 can be visually confirmed. The aluminum film may be partly or wholly removable if necessary.
The thickness of the sheet material (single-layer or multi-layer laminate) constituting the packaging material

2 depends on the layer structure and the characteristics (flexibility, strength, water vapor permeability, heat resistance, etc.) of the material used. It is determined appropriately and is not particularly limited, but is usually preferably about 60 to 700 μm,
More preferably, it is about 500 μm.
The sheet material constituting such a packaging material 2 is as follows:
For example, inflation method, T-die method, blow molding method, dry lamination method, hot melt lamination method,
It can be manufactured by various methods such as a coextrusion inflation method, a coextrusion T-die method, and a hot press method.
Next, a second embodiment of the package of the present invention will be described focusing on differences from the first embodiment, and the description of the same items will be omitted.
In the package of the second embodiment, in place of the deodorant 8 in the package 1 shown in FIG. 1, at least a substance having a function of suppressing the growth (propagation) of microorganisms (bacteria, viruses, etc.) is stored. Things. A typical example of this substance is an antibacterial agent, which will be described below. Here, the antimicrobial agent is a general term for substances having a sterilizing, disinfecting, disinfecting, antibacterial or bacteriostatic action.
The antibacterial agent may be either an organic antibacterial agent or an inorganic antibacterial agent. However, from the viewpoint of giving more importance to safety such as prevention of emergence of resistant bacteria, for example, metals, metal oxides, various antibacterial agents, etc. Inorganic antibacterial agents such as ceramics are preferred.
Antibacterial agents can be classified into cell wall synthesis inhibition, cell membrane disorder, protein synthesis inhibition, DNA synthesis disorder, intracellular metabolism disorder, etc. based on their mechanism of action. May be.
[0071] Such antibacterial agents are particularly preferred.
The above-mentioned titanium oxide (TiO 2).sub.Two).
This titanium oxide is as described above.
The antibacterial agent is housed in a container (packing material) made of, for example, woven fabric, mesh (net-like body) or the like, which has air permeability and liquid permeability, or the container (packaging material) 81 described above. It is preferable that it is housed in the first space 4 in a state where it is closed.
FIG. 2 is a plan view (an internal perspective view) showing a third embodiment of the package of the present invention. Hereinafter, the package of the third embodiment will be described focusing on the differences from the first embodiment, and the description of the same items will be omitted.
As shown in FIG. 2, the package 1 of the third embodiment
Is a sheet-shaped antibacterial agent, that is, an antibacterial sheet 9 stored as an antibacterial agent (at least a substance having a function of suppressing the growth of microorganisms) in the first space 4 of the packaging material 2.
As the antibacterial sheet 9, for example, a sheet,
A material in which an organic antibacterial agent, an antibacterial agent such as a metal having antibacterial activity such as silver, copper or zinc, or an antibacterial agent such as ceramics is supported on a base material such as a porous body. In particular, an inorganic antibacterial agent that is less likely to cause resistant bacteria is preferred.
In the illustrated configuration, the antibacterial sheet 9
Although disposed in a part of the first space 4, an antibacterial sheet sized to cover almost the entire area of the first space 4 can be used. Also, a plurality of antibacterial sheets 9 may be stored.
As in the second and third embodiments, since the antibacterial agent is stored in the first space 4, the used catheter can be used as well as the catheter 7 before or after the packaging material 2 is opened. Even when the catheter 7 is returned to the first space 4, the antibacterial effect can be exerted on the catheter 7, and the transportation and disposal until disposal can be performed sanitarily and safely.
FIG. 3 is a plan view (an internal perspective view) showing a fourth embodiment of the package of the present invention. Hereinafter, the package of the fourth embodiment will be described focusing on the differences from the first embodiment, and the description of the same items will be omitted.
As shown in FIG. 3, the package 1 of the fourth embodiment

Is such that the second space 5 is formed inside the first space 4. That is, the packaging material 2 has a first space 4 in which the catheter 7 and the deodorant 8
(Or an antibacterial agent) and a parcel material (bag) 11 are stored.
The small wrapping material 11 is formed by laminating the same sheet material as the above-mentioned wrapping material 2 and sealing the outer peripheral portion by fusion (or adhesion) to form a bag. , A second space 5 is formed. The fluid substance 10 described above is stored (filled) in the second space 5. The seal portion on the outer periphery of the parcel material 11 constitutes a partition portion 22 for dividing the second space 5 and the first space 4. A weak seal portion 23 similar to the above is formed in a part of the partition portion 22. By peeling (breaking) the weak seal portion 23, the first space 4 and the second space 5 are separated.
And the fluid substance 10 can flow into the first space 4.
The package 1 having such a structure has the following effects (advantages). First, by selecting the volume of the parcel material 11 to be put into the first space 4, the amount and weight of the contents (such as the fluid substance 10) of the parcel material 11 can be easily set. Secondly, since the parcel material 11 is movable in the first space 4, an operation of peeling (breaking) the weak seal portion 23 and an operation of pushing out the fluid substance 10 and the like from the inside of the parcel material 11 are performed. It can be done easily.
Third, because of the double packaging, the required level of the steam barrier property of the parcel material 11, which is a container of the fluid substance 10, may be lower than that of the first to third embodiments. Thus, the degree of freedom in selecting the constituent material of the package material 11 is increased, and the sheet thickness can be reduced, which is advantageous in manufacturing.
Fourth, since the parcel material 11 can be manufactured independently, manufacturing and management are easy.
In the case of the package 1 of the fourth embodiment, only the small package material 11 may have a steam barrier property.
Next, the method of use (operation) of each package 1 described above will be described.
For example, when the weak seal portion 23 is peeled (ruptured) by the above-described method, the first space 4 and the second space 5 communicate with each other, and the fluidity stored in the second space 5 is removed. The substance 10 flows into the first space 4 and contacts the surface of the catheter 7. Thereby, lubricity is expressed on the surface of the catheter 7, and the frictional resistance is reduced. After peeling (breaking) the weak seal portion 23, if necessary, pressing (pressing) the outside of the packaging material 2 by hand or the like to squeeze out the fluid substance 10 or the like from the second space 5 is performed. May go.
The first space 4 and the second space 5 are sterilized in advance, and the operation of developing the lubricity on the surface of the catheter 7 is performed in the inside of the sealed packaging material 2. Is performed without contact with the outside air, the catheter 7 can maintain sterility.
Since the flowable substance 10 flowing into the first space 4 cannot pass through the container 81, the deodorant 8 in the container 81 does not get wet with the flowable substance 10, so that A decrease in the deodorizing function (deodorizing function) is prevented.
Conventionally, in order to prevent bacterial infection, an operation of immersing a catheter in a disinfecting solution such as a 1% povidone iodoglycerin solution to disinfect the catheter before inserting the catheter into a living body has been performed. However, in many cases, the adjustment of the disinfecting solution is very complicated, and in many cases, it is difficult to obtain the disinfecting solution itself, so that the burden on the patient himself is large and the safety is not sufficiently ensured. Also, for the same catheter,
When used repeatedly for multiple times after repeated disinfection, it may become a breeding ground for bacterial propagation due to the formation of a biofilm on the catheter surface and the like. On the other hand, in the present invention, as described above, the catheter 7 can be brought into a usable state (low friction state) without opening the packaging material 2 and the catheter 7 is kept sterile. Since such a state can be obtained, such a conventional problem is solved.
When the operation of developing the lubricity on the surface of the catheter 7 is completed, the weak seal portion 24 is peeled (ruptured),
The zipper 3 is opened, the catheter 7 in the first space 4 is taken out, and inserted or attached to a target part of the living body. When the catheter 7 is a urethral catheter (urinary catheter), the catheter 7 is inserted

into the urethra and the bladder,
Urination is performed via the catheter 7. At this time, the insertion of the catheter 7 can be performed smoothly and safely because the surface of the catheter 7 has lubricity. When urination is completed, the catheter 7 is withdrawn from the urethra.
Although the used catheter 7 is discarded, instead of discarding the catheter 7 alone, the catheter 7 is returned to the first space 4 of the packaging material 2 again, the zipper 3 is closed, and the packaging material is closed. It is preferable to discard every two.
In particular, in the case of self-urination by a patient, it is difficult to use the catheter 7 in the private room of the toilet when going out and then throw it away in the installed trash box.
I would like to take it home and discard it.
In addition, it is not preferable that urine odor emitted from the used catheter 7 leaks to the outside during returning home (during transportation). Furthermore, there is a concern that bacteria, viruses and the like in the urine may propagate due to urine remaining in the catheter 7, which is not hygienic.
In the present invention, when the used catheter 7 is stored in the first space 4 of the packaging material 2, the deodorant 8 eliminates or reduces odors such as urine odor emitted from the catheter 7. Antibacterial agents (titanium oxide, antibacterial sheet 9 etc.)
Inhibits the growth of bacteria, viruses and the like. Thereby, the above-mentioned problems are solved, and the used catheter 7 can be hygienically conveyed without emitting odor.
FIG. 4 is a plan view (internal perspective view) showing a fifth embodiment of the package of the present invention. Hereinafter, the package according to the fifth embodiment will be described focusing on differences from the first embodiment and the like, and description of the same items will be omitted.
As shown in FIG. 4, the package 1 of the fifth embodiment
Has a first space 4, a second space 5, and a third space 6 partitioned by a partition portion 25 in the packaging material 2.
On the outer peripheral portion of the packaging material 2 and the like, a band-shaped sealing portion 21 in which a sheet material constituting the packaging material 2 is fused (or bonded).
Are formed.
The partition 25 is formed by fusing (or adhering) a sheet material in a band shape like the seal portion 21, and has a T-shape. Due to this partition part 25, the inside of the packaging material 2
A first space 4, which is independent (isolated from each other) 4,
It is partitioned into a second space 5 and a third space 6.
In this case, the first space 4, the second space 5, and the third space 6 are arranged adjacent to each other.
Therefore, the second space 5 to the first space 4 as described later
Of liquid to the first space 4 to the third space 6
Can be quickly and reliably performed.
The partition 22 has weak seals 26 and 27 similar to the weak seal 23. By peeling (breaking) the weak seal portion 26, the first space 4 and the second space 5 communicate with each other. By peeling (breaking) the weak seal portion 27, the first space 4 and the third space 3 are broken. Space 6
Communicates with
In the first space 4, the above-mentioned catheter 7 is stored, and in the second space 5, the above-mentioned fluid substance 10 is stored.
The third space 6 contains a water-absorbing material 12 as a substance capable of absorbing and retaining a liquid. Examples of the water absorbing material 12 include a polyacrylate, a polyvinyl alcohol, a polyacrylamide,
Preferred are synthetic polymers such as polyoxyethylene-based or maleic acid-based materials, and polymeric water-absorbing materials such as natural materials such as polysaccharide materials such as starch, cellulose, and alginic acid. In addition, other, for example, sponge,
Examples thereof include cotton, gauze, nonwoven fabric, and those in which the above-mentioned polymer water-absorbing material is supported (for example, those used for diapers, sanitary products, and the like).
These water absorbing materials 1
2 can take various forms such as, for example, powder, film, sheet, and fiber (aggregate of fibers).
The first space 4 or the third space 6

In addition, the above-mentioned deodorant and / or antibacterial agent may be stored. In particular, when these are stored in the third space 6, a configuration in which the deodorant (a component having a deodorizing function) and / or an antibacterial agent (a component having an antibacterial function) is carried on the water absorbing material 12 as described above. It is preferable that
FIG. 5 is a plan view (internal perspective view) showing a sixth embodiment of the package of the present invention. Hereinafter, the package of the sixth embodiment will be described focusing on the differences from the fifth embodiment and the like, and the description of the same items will be omitted.
As shown in FIG. 5, the package 1 of the sixth embodiment
The first space 4 and the third space 6 are separated by a partition portion 25 having a weak seal portion 27, and the second space 5 is
Is formed inside the space 4. That is, in the first space 4 of the packaging material 2, the above-described catheter 7 and the same small packaging material (bag body) 11 as described above are stored.
The outer peripheral portion of the package material 11 is constituted by a partition portion 22 having a weak seal portion 23, and a second space 5 is formed inside the partition portion 22. The fluid substance 10 described above is stored (filled) in the second space 5. By peeling (breaking) the weak seal portion 23, the first space 4 and the second space 5 communicate with each other, and the fluid substance 10 can flow into the first space 4.
Further, in the third space 6, the same water-absorbing material (substance capable of absorbing and retaining a liquid) 12 as described above is accommodated.
The package 1 having such a structure has the same effect (advantage) as the package 1 of the fourth embodiment.
FIG. 6 is a plan view (an internal perspective view) showing a seventh embodiment of the package of the present invention. Hereinafter, the package of the seventh embodiment will be described focusing on the differences from the fifth embodiment, the sixth embodiment, and the like, and the description of the same items will be omitted.
As shown in FIG. 6, the package 1 of the seventh embodiment
Is such that the second space 5 and the third space 6 are respectively formed inside the first space 4. That is,
In the first space 4 of the packaging material 2, the catheter 7 described above is provided.
And a parcel material (bag body) 14 are stored.
The small packaging material 14 is formed by stacking the same sheet material as the above-described packaging material 2 and sealing the outer periphery and the middle thereof by fusion (or adhesion) to form a bag. Inside, a second space 5 and a third space 6 are formed via a partition 28.
In the second space 5, the above-mentioned fluid substance 1
0 is stored (filled), and the above-described water-absorbing material (substance capable of absorbing and holding a liquid) 12 is stored in the third space 6.
The outer peripheral portion of the package material 14 and the seal portion crossing the middle thereof constitute a partition portion 28 for isolating (partitioning) the first space 4, the second space 5 and the third space 6. A weak seal portion 26 for opening the second space 5 and a weak seal portion 27 for opening the third space 6 are formed in a part of the partition portion 28. In this embodiment,
The weak seal portions 27 are provided at two places.
The package 1 having such a structure has the following effects (advantages). First, by selecting the capacity of the parcel material 14 to be put in the first space 4 (the respective capacities of the second space 5 and the third space 6), the contents (fluidity) of the parcel material 14 are selected. Substance 10 and water absorbing material 12)
Amount and weight can be easily set. Secondly, since the parcel material 14 is movable in the first space 4, an operation of peeling (breaking) the weak seal portions 26 and 27 or squeezing out the fluid substance 10 or the like from the second space 5. The operation and the operation of collecting the liquid into the third space 6 can be easily performed (at an appropriate position). The same applies to the third and fourth advantages of the above-described parcel material 11.
In this embodiment, the second space 5 and the third space 6 are formed in one parcel material 14.
The present invention is not limited to this. Two separated parcels are stored in the first space 4, and the second parcels 5

And the third space 6 may be formed.
With this configuration, the same effect as described above can be obtained.
FIG. 7 is a plan view (internal perspective view) showing an eighth embodiment of the package of the present invention. Hereinafter, the package of the eighth embodiment will be described focusing on differences from the fifth embodiment and the like, and the description of the same items will be omitted.
As shown in FIG. 7, the package 1 of the eighth embodiment
Has a U-shaped second space 5 on the lower end side, and the above-mentioned fluid substance 10 is stored (filled) in the second space 5.
A third space 6 is formed inside the second space 5 (on the center side of the packaging material 2) via a U-shaped partition portion 29, and is formed in the third space 6. Contains the water-absorbing material (substance capable of absorbing and retaining a liquid) 12 described above.
The partition 25 separates the first space 4 from the second space 5 and the first space 4 from the third space 6, respectively. The partition 25 has a weak seal 27 for opening the third space 6.
On one side of the partition 25, a sealing member 13 which can be broken and opened is provided. The sealing member 13 is fused to the partition 25 so as to intersect with the partition 25. Hereinafter, the configuration of the sealing member 13 will be described.
FIG. 8 is a longitudinal sectional view showing an example of the structure of the sealing member 13. As shown in FIG. As shown in the figure, a sealing member 13 is composed of a short tube 131 made of a flexible resin such as soft polyvinyl chloride,
1 and a cylindrical body 132 whose one end is closed by a solid columnar portion 133.
The upper end of the short tube 131 in FIG.
8 and the lower end of the cylindrical body 132 in FIG.
Space 5.
A thin and fragile breaking portion 134 is formed on the outer periphery in the middle of the cylindrical body 132. The internal flow path of the sealing member 13 is opened by bending the solid columnar portion 133 together with the short tube 131 from the outside of the short tube 131 by the finger or the like to break the broken portion 134 and separate the solid columnar portion 133. . Thereby, the first space 4 and the second space 5
And the fluid substance 10 in the second space 5 can flow into the first space 4.
As a constituent material of the cylindrical body 132, for example,
Hard materials such as hard polyvinyl chloride, polycarbonate, and polyester are exemplified.
The upper end 135 of the solid columnar portion 133 is also provided.
Has a wedge shape (flat shape). Thereby, after the solid columnar part 133 is fractured and separated, the solid columnar part 133 is separated.
However, the short tube 131 is not closed, and a sufficient liquid flow can be secured.
The inner diameter of the upper end of the short tube 131 in FIG. 8 is reduced, so that the solid columnar portion 133 after breaking and separation cannot pass through the reduced diameter portion 136. I have.
Thus, the solid columnar portion 133 that has been broken and separated can be prevented from entering the first space 4 and freely moving in the first space 4.
In the fifth, sixth, seventh, and eighth embodiments, the second space 5 contains the fluid substance 10, but in each of these embodiments, Instead of the fluid substance 10, a liquid containing a blood anticoagulant (antithrombotic) may be stored in the second space 5. Thereby, when using the catheter 7, a blood anticoagulant function can be provided to the catheter 7.
Examples of the blood anticoagulant include those shown in Table 1 below.
[0126]
[Table 1]
In each of the above embodiments, the packaging material 2 is made of a flexible sheet material. However, the present invention is not limited to this. For example, a part of the packaging material 2 is made of a relatively hard material. May be used. A specific example thereof is a so-called blister container. The blister container is made of a relatively hard material, and includes a main body having a recess forming a storage space (for example, a first space), and a film for hermetically sealing an opening of the recess.
The film is opened by peeling off the film.
Next, the method of use (operation) of each package 1 of the fifth to eighth embodiments will be described.

When the weak seal portion 23 or 26 is peeled (ruptured) (in the case of the eighth embodiment,
When the solid columnar portion 133 of the sealing member 13 is broken and separated),
The first space 4 and the second space 5 communicate with each other, and the second space 5
The fluid substance 10 stored therein flows into the first space 4 and comes into contact with the surface of the catheter 7. This allows
Lubricity is developed on the surface of the catheter 7, and frictional resistance is reduced. If necessary, the fluid substance 10 is pressed from the outside of the packaging material 2 by hand (pressing) from the second space 5.
For example, an operation of ironing out may be performed.
The first space 4 and the second space 5 have been sterilized in advance, and the operation of developing the lubricity on the surface of the catheter 7 is performed in the inside of the sealed packaging material 2. Is performed without contact with the outside air, the catheter 7 can maintain sterility. As described above, the catheter 7 can be used without opening the packaging material 2 (low friction state), and such a state can be achieved while maintaining the sterility of the catheter 7. Therefore, the conventional problem described above is solved.
When the operation for developing the lubricity on the surface of the catheter 7 is completed, the weak seal portion 24 is peeled off (ruptured).
The zipper 3 is opened, the catheter 7 in the first space 4 is taken out, and inserted or attached to a target part of the living body. When the catheter 7 is a urethral catheter (urinary catheter), the catheter 7 is inserted into the urethra and the bladder,
Urination is performed via the catheter 7. At this time, the insertion of the catheter 7 can be performed smoothly and safely because the surface of the catheter 7 has lubricity. When urination is completed, the catheter 7 is withdrawn from the urethra.
Although the used catheter 7 is discarded, instead of discarding the catheter 7 alone, the catheter 7 is returned to the first space 4 of the packaging material 2 again, the zipper 3 is closed, and the packaging material is closed. It is preferable to discard every two.
At this time, the weak seal portion 27 is peeled (ruptured) and opened by the method described above. As a result, the first space 4 and the third space 6 communicate with each other, and bodily fluids such as urine adhered to the surface of the catheter 7 or remaining in the catheter 7 are stored in the third space 6. Can be absorbed and retained by the water-absorbing material 12. As a result, leakage of bodily fluids such as urine can be more reliably prevented, and the used catheter 7 can be conveyed hygienically with the packaging material 2 and discarded.
In particular, when the water-absorbing material 12 carries a deodorant (a component having a deodorizing function) and / or an antibacterial agent (a component having an antibacterial function), it emits odor and prevents bacteria, viruses and the like. Proliferation can be suppressed, and more hygienic and safe transport and disposal can be performed.
As described above, according to the package 1 of the present invention, it is possible to easily and aseptically contact the lubricant, blood anticoagulant, etc. with the catheter, and also to carry and unpack the patient. Not only is it simple, but it can also be transported and disposed of hygienically and safely after use of the catheter.
[0135] In the present invention, examples of instruments housed in the first space 4 include the following.
Oral or nasal such as gastric tube catheter, feeding catheter, tube for tube feeding, oxygen catheter, oxygen cannula, tube and cuff for endotracheal tube, tube and cuff for tracheostomy tube, intratracheal suction catheter, etc. Catheters to be inserted and detained.
Catheters to be inserted and placed in various body cavities, organs, and tissues such as suction catheters, drainage catheters, peritoneal catheters, rectal catheters, and trocars.
Catheters to be inserted and placed in blood vessels such as angiographic catheters, PTCA balloon catheters, IABP balloon catheters, indwelling catheters, and arterial infusion catheters.
Various guidewires used alone or with each of the catheters described above. Artificial blood vessels, stents, colostomy, artificial bones, artificial joints, prostheses, artificial eyes. Injection needle, indwelling needle, sheath, catheter introducer.
An endoscope, a cardiac output measuring instrument, an ultrasonic measuring / diagnosing instrument, an ultrasonic crushing probe, a pacemaker,

Thermometer. Thread for suture or ligature Enema Contact lens Contraceptive device such as condom
In the present invention, the arrangement of the first space 4, the second space 5, and the third space 6 is not limited to that of each of the illustrated embodiments. And the third space may be arranged in a line in this order. Further, the packaging material may further have a fourth space.
The first space 4, the second space 5, and the third space 6 may each contain any other than the above.
[0143]
The present invention will be specifically described below with reference to examples.
Example 1A Polypropylene (XF18)
00, manufactured by Chisso Corporation and 60 parts by weight and a styrene-based elastomer (Hybra HVS-3, manufactured by Kuraray Co., Ltd.), 40 parts by weight, are used to form an inflation sheet (thickness: 300 μm, water vapor permeability: 15 g) by co-extrusion molding. / m .sup.2 .Math. 24 hrs, 25 μm thickness, 40 ° C., 90% RH). This sheet was sealed by heat sealing to form a packaging material having the configuration shown in FIG.
In the first space of the packaging material, a Neraton catheter (Safide, 14Fr, manufactured by Terumo Corporation) as a catheter used by being inserted into the urethra, and a water-impermeable porous material made of polyethylene Non-woven fabric (trade name: TYPEC, Asahi DuPont Flash Span Products Co., Ltd.) Deodorant / air freshener (trade name: Airnip, manufactured by Tact Co., Ltd.). In addition, as for this Neraton catheter, the surface has a 0.2 wt% polyvinylpyrrolidone-chloroform solution (trade name: Kolydone K).
30, BASF Japan Co., Ltd.) coated with a layer of a hydrophilic polymer material. Also, in the second space of the packaging material, put 10 ml of water,
Sealed.
Sealing part of packaging material (part other than weak sealing part)
Was heat-sealed at 200 ° C. for 4 seconds and 0.25 kgf / cm .sup.2 , and the weakly sealed portion was heat-sealed at 105 ° C. for 4 seconds and 0.25 kgf / cm .sup.2 and subjected to high-pressure steam sterilization at 110 ° C. for 60 minutes. .
After sterilization, the package was vibrated violently, but peeling of the weak seal was not observed, and there was no contact between water and the catheter.
Next, when the packaging material was pressed and pressed by hand to apply a load to the weak seal portion 23, only the weak seal portion 23 was peeled off, and water in the second space was introduced into the first space. It spilled and came into contact with the catheter. Thereby, it was confirmed that the water and the catheter can be easily and aseptically contacted with each other.
After contact of the catheter with water, the weak seal portion 24 was opened, and the catheter was taken out and rubbed against the surface. As a result, the surface showed lubricity, the frictional resistance was reduced, and It was suggested that the operability of the insertion operation was improved.
Thereafter, the catheter was immersed in artificial urine having the components shown in Table 2 below for 30 seconds. Then, the catheter was returned to the first space of the packaging material, and the zipper was closed and sealed, and left for a predetermined time. The face was brought close to the packaging material, but no unpleasant sensation such as urine odor was observed.
Therefore, after using the catheter, the patient can easily take the catheter home without hesitation around, and can not only be relieved from the mental burden but also have a urinary odor to the outside air. Does not leak,
It was suggested that it was also favorable for hygiene.
[0152]
[Table 2]
(Examples 2A, 3A and 4A) The same inflation sheet as in Example 1A was sealed by heat sealing to form a packaging material having the structure shown in FIG.
In the first space of the packaging material, the same Neraton catheter (without surface coating) as described above was placed, and in the second space, a lubricant having the composition shown in Table 3 below was placed, and each was hermetically sealed. did. In the first space, a deodorant, an fragrance, and the like packaged with a water-impermeable porous body shown in Table 3 below were placed.
[0155]

[Table 3]
Sealing part of packaging material (part other than weak sealing part)
Was heat-sealed at 200 ° C. for 4 seconds and 0.25 kgf / cm .sup.2 , and the weakly sealed portion was heat-sealed at 105 ° C. for 4 seconds and 0.25 kgf / cm .sup.2 and subjected to high-pressure steam sterilization at 110 ° C. for 60 minutes. .
After sterilization, the package was vibrated violently, but peeling of the weak seal was not observed, and there was no contact between the liquid in the second space and the catheter.
Next, when the packaging material was pressed and pressed by hand and a load was applied to the weak seal portion 23, only the weak seal portion 23 was peeled off, and the liquid in the second space was introduced into the first space. It spilled and came into contact with the catheter. Thereby, it was confirmed that the liquid and the catheter can be easily and aseptically contacted with each other.
After the contact between the liquid in the second space and the catheter, the weak seal portion 24 was opened, and the catheter was taken out and rubbed against the surface. The sliding resistance value on the surface has been reduced,
The improvement of the operability of the insertion operation into the body cavity was suggested.
Thereafter, the catheter was immersed in artificial urine having the components shown in Table 2 for 30 seconds. Then, the catheter was returned to the first space of the packaging material, and the zipper was closed and sealed, and left for a predetermined time. I brought my face close to the packaging material, but I felt a urine odor.
No unpleasant feeling was observed.
Therefore, after using the catheter, the patient can easily take the catheter home without hesitation around, and can not only be relieved from the mental burden, but also have a urinary odor to the outside air. Does not leak,
It was suggested that it was also favorable for hygiene.
(Examples 5A and 6A) The same inflation sheet as in Example 1A was sealed by heat sealing to form a packaging material having the structure shown in FIG.
In the first space of the packaging material, the same Neraton catheter (without surface coating) as described above was placed, and in the second space, a lubricant having the composition shown in Table 4 below was placed, and each was hermetically sealed. did. In the first space, an antimicrobial sheet shown in Table 4 below was placed.
[0164]
[Table 4]
Sealing part of packaging material (part other than weak sealing part)
Was heat-sealed at 200 ° C. for 4 seconds and 0.25 kgf / cm .sup.2 , and the weakly sealed portion was heat-sealed at 105 ° C. for 4 seconds and 0.25 kgf / cm .sup.2 and subjected to high-pressure steam sterilization at 110 ° C. for 60 minutes. .
After sterilization, the package was vibrated violently, but peeling of the weak seal was not observed, and there was no contact between the liquid in the second space and the catheter.
Next, when the packaging material was pressed and pressed by hand to apply a load to the weak seal portion 23, only the weak seal portion 23 was peeled off, and the liquid in the second space was introduced into the first space. It spilled and came into contact with the catheter. Thereby, it was confirmed that the liquid and the catheter can be easily and aseptically contacted with each other.
After the liquid in the second space and the catheter came into contact with each other, the weak seal portion 24 was opened, the catheter was taken out, and the surface was rubbed. The sliding resistance value on the surface has been reduced,
The improvement of the operability of the insertion operation into the body cavity was suggested.
Thereafter, the catheter was immersed in artificial urine having the components shown in Table 2 for 30 seconds. Then, the catheter was returned to the first space of the packaging material, and the zipper was closed and sealed, and left for a predetermined time. I brought my face close to the packaging material, but I felt a urine odor.
No unpleasant feeling was observed. Furthermore, the antibacterial action of the antibacterial sheet suppressed the proliferation of urinary bacteria, viruses and the like adhering to and remaining on the catheter.

[0170] Therefore, after using the catheter, the patient can easily take the catheter home without hesitating to the surroundings, and not only can be released from the mental burden, but also can have urinary odor to the outside air. It was suggested that it was preferable from the viewpoint of hygiene, because there was no possibility of leakage and no possibility of bacterial infection.
(Example 7A) The same inflation sheet as in Example 1A was sealed by heat sealing to form a packaging material having the structure shown in FIG.
In the first space of the packaging material, the same Neraton catheter (having the same surface as in Example 1A) was placed, and in the second space, 10 ml of water was placed.
And sealed each. In the first space,
Deodorizing and antibacterial sheet containing titanium oxide (trade name: PM-I
N-CD, manufactured by Mitsubishi Paper Mills).
Sealing part of packaging material (part other than weak sealing part)
Was heat-sealed at 200 ° C. for 4 seconds and 0.25 kgf / cm .sup.2 , and the weakly sealed portion was heat-sealed at 105 ° C. for 4 seconds and 0.25 kgf / cm .sup.2 and subjected to high-pressure steam sterilization at 110 ° C. for 60 minutes. .
After sterilization, the package was vibrated violently, but peeling of the weak seal was not observed, and there was no contact between the liquid in the second space and the catheter.
Next, when the packaging material was pressed and pressed by hand and a load was applied to the weak seal portion 23, only the weak seal portion 23 was peeled off, and water in the second space was introduced into the first space. It spilled and came into contact with the catheter. Thereby, it was confirmed that the water and the catheter can be easily and aseptically contacted with each other.
After the water in the second space came into contact with the catheter, the weak seal portion 24 was opened, and the catheter was taken out and rubbed against the surface. The sliding resistance on the surface was significantly reduced, suggesting improved operability of the insertion operation into the body cavity.
Thereafter, the catheter was immersed in artificial urine having the components shown in Table 2 for 30 seconds. Then, the catheter was returned to the first space of the packaging material, the zipper was closed and sealed, and left for a predetermined time. I brought my face close to the packaging material, but I felt a urine odor.
No unpleasant feeling was observed. Furthermore, the antibacterial action of the deodorizing / antibacterial sheet suppressed the proliferation of bacteria, viruses, and the like in the urine that had adhered to and remained on the catheter.
Therefore, after using the catheter, the patient can easily take the catheter home without hesitating to the surroundings, and can not only be relieved from the mental burden, but also can have urinary odor to the outside air. It was suggested that it was preferable from the viewpoint of hygiene, because there was no possibility of leakage and no possibility of bacterial infection.
(Example 8A) The same inflation sheet as in Example 1A was sealed by heat sealing to form a packaging material containing a small packaging material having the structure shown in FIG.
In the first space of the packaging material, the same Neraton catheter and the small packaging material as in Example 1A were put and sealed.
The second space of the parcel material was filled with 20 ml of water and sealed. In the first space, a deodorant / fragrance (trade name) packaged by a polyethylene nonwoven fabric (trade name: TYPEC, manufactured by Asahi DuPont Flash Spun Products Co., Ltd.) which is a water-impermeable porous body : Air Nip, manufactured by Tact Co., Ltd.).
The sealing part (the part other than the weak sealing part) of the packaging material and the small packaging material is 200 ° C., 4 seconds, 0.25 kgf / c
m .sup.2, and the weak seal portion, 105 ° C., 4 seconds, 0.25 kg
f / cm .sup.2 at 110 ° C, 60
The autoclave was autoclaved for a minute.
After sterilization, the package was vibrated violently, but peeling of the weak seal was not observed, and there was no contact between the liquid in the second space and the catheter.
Next, when the small packaging material was pressed and pressed by hand from above the packaging material to apply a load to the weak seal portion 23, only the weak seal portion 23 was peeled off, and the

water in the second space was removed from the second space. 1 and came into contact with the catheter. Thereby, it was confirmed that the water and the catheter can be easily and aseptically contacted with each other. In addition, since this operation was performed by moving the small package material to a suitable position in the package material, the opening operation of the small package material could be performed more easily and reliably.
After the water in the second space came into contact with the catheter, the weak seal portion 24 was opened, and the catheter was taken out and rubbed against the surface. The sliding resistance on the surface was significantly reduced, suggesting improved operability of the insertion operation into the body cavity.
Thereafter, the catheter was immersed in artificial urine having the components shown in Table 2 for 30 seconds. Then, the catheter was returned to the first space of the packaging material, the zipper was closed and sealed, and the container was left for a predetermined time. I brought my face close to the packaging material, but I felt a urine odor.
No unpleasant feeling was observed. Further, the antibacterial action of the deodorizing / antibacterial agent suppressed the proliferation of bacteria and viruses in urine attached to and remaining on the catheter. Therefore, after using the catheter, the patient can easily take the catheter home without hesitating to the surroundings, and can not only be relieved from the mental burden, but also have a urinary odor to the outside air. It was suggested that it was preferable from the viewpoint of hygiene, because there was no possibility of leakage and no possibility of bacterial infection.
Example 1B Polypropylene (XF18)
00, manufactured by Chisso Corporation and 60 parts by weight and a styrene-based elastomer (Hybra HVS-3, manufactured by Kuraray Co., Ltd.), 40 parts by weight, are used to form an inflation sheet (thickness: 300 μm, water vapor permeability: 15 g) by co-extrusion molding. / m .sup.2 .Math. 24 hrs, 25 μm thickness, 40 ° C., 90% RH). This sheet was sealed by heat sealing to form a packaging material having the structure shown in FIG.
In the first space of the packaging material, the same Neraton catheter as in Example 1A was placed, in the second space, 10 ml of water was placed, and in the third space, a cross-linking material, which was a water-absorbing material, was placed. Sodium polyacrylate (trade name: Aquaric,
1 g of Nippon Shokubai Kagaku Kogyo Co., Ltd.) was added, and each was sealed.
Sealing part of packaging material (parts other than weak seal part)
Was heat-sealed at 200 ° C. for 4 seconds at 0.25 kgf / cm .sup.2 , and the weakly sealed portion was heat-sealed at 105 ° C. for 4 seconds at 0.25 kgf / cm .sup.2 , and γ-ray sterilized at .sup.2 Mrad.
After sterilization, the package was vibrated violently, but peeling of the weak seal was not observed, and there was no contact between water and the catheter and no contact between water and the water-absorbing material.
Next, when the packaging material was pressed and pressed by hand and a load was applied to the weak seal portion 26, only the weak seal portion 26 was peeled off, and the water in the second space was introduced into the first space. It spilled and came into contact with the catheter. Thereby, it was confirmed that the water and the catheter can be easily and aseptically contacted with each other.
After contact of the catheter with water, the weak seal portion 24 was opened, and the catheter was taken out and rubbed against the surface. As a result, the surface showed lubricity, reduced frictional resistance, and reduced the body cavity. It was suggested that the operability of the insertion operation was improved.
Thereafter, the catheter was soaked in bovine blood for 30 seconds, and then the catheter was returned to the first space of the packaging material, and the zipper was closed and sealed.
Next, when the weak seal portion 27 was opened to make the first space and the third space communicate with each other and the packaging material was vibrated, the blood adhering and remaining on the surface and inside of the catheter was removed. The water was absorbed and retained by the water-absorbing material in the third space. Therefore, even if the zipper was opened, blood did not leak.
Therefore, even if the used catheter is transported in a packaging material and discarded together with the packaging material, there is no blood leakage during that time, blood contamination and infection are prevented, and high safety is suggested. Was done.
(Example 2B) The same inflation sheet as in Example 1B was sealed by heat sealing to form a packaging

material containing a small packaging material having the structure shown in FIG.
In the first space of the packaging material, the same Neraton catheter and guide wire (inserted into the lumen of the catheter) as in Example 1A and a small packaging material are placed.
Sealed. In the second space of the package material, 18 ml of the CPDA-1 solution shown in Table 1 above was placed as a blood anticoagulant solution and sealed. In a third space of the packaging material, 2 g of crosslinked sodium polyacrylate (trade name: Aquaric, manufactured by Nippon Shokubai Chemical Industry Co., Ltd.) as a water-absorbing material was placed and sealed.
The sealing part (the part other than the weak sealing part) of the packaging material and the small packaging material is 200 ° C., 4 seconds, 0.25 kgf / c
m .sup.2, and the weak seal portion, 105 ° C., 4 seconds, 0.25 kg
heat seal at f / cm .sup.2 and γ at .sup.2 Mrad
X-ray sterilization was performed.
After sterilization, the package was vibrated violently, but peeling of the weak seal was not observed, and there was no contact between the anticoagulant solution and the catheter and between the anticoagulant solution and the water absorbent material. .
Next, when the small package material was pressed and pressed by hand from above the package material to apply a load to the weak seal portion 23, only the weak seal portion 23 was peeled off, and the anticoagulant in the second space was removed. The liquid is first
Out of the space and contacted the catheter. Thereby, it was confirmed that the anticoagulant solution and the catheter can be easily and aseptically contacted with each other. In addition, since this operation was performed by moving the small package material to a suitable position in the package material, the opening operation of the small package material could be performed more easily and reliably.
After contact between the anticoagulant solution and the catheter, the weak seal portion 24 was opened, the catheter was taken out, and the surface was rubbed. The catheter surface showed lubricity due to the moisture of the anticoagulant solution. , The frictional resistance has been reduced,
The improvement of the operability of the insertion operation into the body cavity was suggested. Also, Since the anticoagulant is attached to the surface of the catheter,
It is considered that when inserted into a blood vessel, an excellent anticoagulant effect is exhibited.
Thereafter, the catheter was soaked in bovine blood for 30 seconds, and then the catheter was returned to the first space of the packaging material, and the zipper was closed and sealed.
Next, when the weak seal portion 27 is opened to make the first space and the third space communicate with each other and the packaging material is vibrated, the blood adhering and remaining on the surface and inside of the catheter is removed. The water was absorbed and retained by the water-absorbing material in the third space. Therefore, even if the zipper was opened, blood did not leak.
Therefore, even if the used catheter is transported in a packaging material and discarded together with the packaging material, there is no leakage of blood during that time, blood contamination and infection are prevented, and safety is high. Was done.
Example 3B An inflation sheet similar to that of Example 1B was sealed by heat sealing to form a packaging material containing a small packaging material having the structure shown in FIG.
In the first space of the packaging material, the same Neraton catheter and guide wire (in the state inserted into the lumen of the catheter) and the small packaging material as in Example 1A were placed.
Sealed. In the second space of the parcel material, 18 ml of the heparin solution shown in the above Table 1 was put as a blood anticoagulant solution, and in the third space, crosslinked sodium polyacrylate (trade name: Aquaric), which is a water-absorbing material. , Nippon Shokubai Chemical Industry Co., Ltd.
2 g) were sealed and each was sealed.
The sealing part (the part other than the weak sealing part) of the packaging material and the small packaging material is 200 ° C., 4 seconds, 0.25 kgf / c.
m .sup.2, and the weak seal portion, 105 ° C., 4 seconds, 0.25 kg
heat seal at f / cm .sup.2 and γ at .sup.2 Mrad
X-ray sterilization was performed.
After sterilization, the package was vibrated violently, but peeling of the weak seal was not observed, and there was no contact between the anticoagulant solution and the catheter and no contact between the

anticoagulant solution and the water absorbent material. .
Next, when the upper half of the small packaging material in FIG. 6 was pressed and pressed by hand from above the packaging material to apply a load to the weak seal portion 26, only the weak seal portion 26 was peeled off, and the second The anticoagulant liquid in the space flowed out into the first space and came into contact with the catheter. Thereby, it was confirmed that the anticoagulant solution and the catheter can be easily and aseptically contacted with each other. In addition,
Since this operation was performed by moving the small packaging material to a suitable position within the packaging material, the operation of opening the weak seal portion 26 could be performed more easily and reliably.
After the anticoagulant solution was brought into contact with the catheter, the weak seal portion 24 was opened, the catheter was taken out, and the surface was rubbed. The catheter surface showed lubricity due to the moisture of the anticoagulant solution. , The frictional resistance has been reduced,
The improvement of the operability of the insertion operation into the body cavity was suggested. Also,
Since the anticoagulant is attached to the surface of the catheter,
It is considered that when inserted into a blood vessel, an excellent anticoagulant effect is exhibited.
Thereafter, the catheter was dipped in bovine blood for 30 seconds, and then the catheter and the guide wire were returned to the first space of the packaging material, and the zipper was closed and sealed.
Next, the weak seal portion 27 of the parcel material is opened to make the first space and the third space communicate with each other, and when the wrapping material is vibrated, it adheres and remains on the surface and inside of the catheter. The collected blood was absorbed and retained by the water-absorbing material in the third space. Therefore, even if the zipper was opened, blood did not leak. In addition, since this operation was performed by moving the small packaging material to a suitable position in the packaging material, the opening operation of the weak seal portion 27 and the absorption of the remaining blood could be performed more easily and reliably.
Therefore, even if the used catheter is transported in a packaging material and discarded together with the packaging material, there is no blood leakage during that time, thereby preventing contamination and infection, and suggesting high safety. Was done.
(Examples 4B, 5B, 6B) The same inflation sheet as in Example 1B was sealed by heat sealing to form a packaging material having the structure shown in FIG.
In the first space of the packaging material, the same Neraton catheter as in Example 1B (without surface coating)
, And a lubricant having the composition shown in Table 5 below was placed in the second space, and each was sealed. The third space was filled with a water-absorbing material shown in Table 5 below and sealed.
[0216]
[Table 5]
Sealing part of packaging material (part other than weak sealing part)
Was heat-sealed at 200 ° C. for 4 seconds at 0.25 kgf / cm .sup.2 , and the weakly sealed portion was heat-sealed at 105 ° C. for 4 seconds at 0.25 kgf / cm .sup.2 , and γ-ray sterilized at .sup.2 Mrad.
After sterilization, the package was vibrated violently, but no peeling of the weak seal portion or breakage of the sealing member was observed.
There was no contact between the lubricant and the catheter and no contact between the lubricant and the water-absorbing material.
Next, the sealing member (the structure shown in FIG. 8) is bent by hand from the outside of the packaging material, the solid columnar portion is broken and separated at the breaking portion, and the portion of the second space of the packaging material is pressed. As a result, the lubricant in the second space flowed into the first space and came into contact with the catheter. Thereby, it was confirmed that the lubricant can be easily and aseptically contacted with the catheter.
[0220] After contact between the lubricant and the catheter, the weak seal portion 24 was opened, and the catheter was taken out and rubbed against the surface. As a result, the surface showed lubricity and the frictional resistance was reduced. It was suggested that the operability of the insertion operation into the device was improved.
Thereafter, the catheter was immersed in artificial urine having the components shown in Table 2 for 30 seconds, and then the catheter was returned to the first space of the packaging material, and the zipper was

closed and sealed.
Next, the weak seal portion 27 was opened to make the first space and the third space communicate with each other, and when the packaging material was vibrated, the artificial urine adhering and remaining on the surface and inside of the catheter was removed. Was absorbed and retained by the water-absorbing material in the third space. Therefore, even if the zipper was opened, leakage of artificial urine did not occur. Therefore, even if the used catheter is transported in a packaging material and discarded together with the packaging material, there is no leakage of bodily fluids such as urine during that time, thereby preventing contamination and infection and high safety. It has been suggested.
(Example 1C) As a sheet constituting a packaging material, polypropylene (manufactured by Mitsubishi Chemical Corporation, SPX960)
0) monolayer film (film thickness 300 μm, water vapor transmission rate 21 g / m .sup.2 .Math. 24 hrs .Math. 25 μm thickness .Math. 40 ° C. .Math.
A package having the configuration shown in FIG. 1 was manufactured in the same manner as in Example 1A except that 90% RH) was used. The items stored in the first space and the second space of the packaging material are the same as those in the embodiment 1A.
(Example 2C) A linear low-density polyethylene (Nippon Polychem Co., Ltd.)
Monolayer film (film thickness 30) made of a polymer blend of Novatec LL UF340 manufactured by Novotech Co., Ltd. and polypropylene (Chisso Polypro K7714 manufactured by Chisso Corp.)
0 μm, water vapor transmission rate 18 g / m .sup.2 24 hrs 25 μ
Example 1 except that m-thickness / 40 ° C./90% RH) was used.
A package having the configuration shown in FIG. 1 was manufactured in the same manner as in A.
The items stored in the first space and the second space of the packaging material are the same as those in the embodiment 1A.
(Example 3C) As a sheet constituting a packaging material, a two-layer composed of a first layer made of a polymer blend film of linear low-density polyethylene and polypropylene and a second layer made of a silica-deposited polyethylene terephthalate film Laminated film (Dai Nippon Printing Co., Ltd.
Film thickness 300 [mu] m, water vapor permeability 0.6g / m .sup.2 .Math. .sup.2
4 hrs, 25 μm thickness, 40 ° C., 90% RH)
A package having the configuration shown in FIG. 1 was manufactured in the same manner as in Example 1A, except that the layers were used so as to be joined to each other. The storage items in the first space and the second space of the packaging material are also the same as those of the first embodiment.
Same as A.
(Example 4C) As sheets constituting the packaging material, the first layer of a polymer blend film of linear low-density polyethylene and polypropylene, the second layer of an aluminum film, and the third layer of a polyethylene terephthalate film Constructed three-layer laminated film (Toyo Aluminum Co., Ltd., film thickness 300μ)
m, water vapor transmission rate 0.3 g / m .sup.2 .Math. 24 hrs .Math. 25 .Math.
m thickness, 40 ° C., 90% RH) in the same manner as in Example 1A, except that the first layers were joined to each other.
Was manufactured. The items stored in the first space and the second space of the packaging material are also the same as those in Example 1A.
Example 5C Example 4C was repeated except that the liquid stored in the second space was 10 ml of an aqueous glycerin solution (manufactured by Kenei Pharmaceutical Co., Ltd., glycerin concentration: 84 to 87%).
A package similar to the above was produced.
<Test 1> Each package of Examples 1C to 5C was left for 4 weeks in an environment of a temperature of 40 ° C. and a humidity of 75% RH.
After one week, two weeks and four weeks, the second
The change over time in the rate of decrease of the liquid stored in the space was examined. The results are shown in Table 6 below. Here, the reduction rate of the liquid was calculated by the following equation.
Reduction rate (%) = (W .sub.0 −W) / W .sub.0 × 100 where W .sub.0 : the total weight

of the liquid at the start of the test (10 g) W: each liquid after 2, 4 and 4 weeks Weight of
[0231]
[Table 6]
As shown in Table 6, in all of the packages of Examples 1C to 5C, since the packaging material had a steam barrier property, the reduction rate of the liquid was low. It was confirmed that the reduction and concentration could be prevented, and the invasion of water vapor into the first space could be prevented. In particular, the water vapor permeability is 1 g / m .sup.2 .Math. 24 h
Example 3 rs, 25 μm thickness, 40 ° C., 90% RH or less
The package of C to 5C has a very small reduction rate of the liquid, and such an effect is more remarkably exhibited. Example 5C
In, the liquid stored in the second space was an aqueous glycerin solution having a lower volatility than water, so that the liquid hardly decreased.
<Test 2> Each of the packages of Examples 1C to 5C was left in the above environment for another 4 weeks. However, peeling of the weak seal portions 23 and 24 was not observed, and water from the second space was not observed. No leakage occurred.
After that, when the portion forming the second space of the packaging material was pressed and pressed by hand, the weak seal portion 23 could be easily and reliably peeled off from any of the packages, and It was confirmed that peel sealability was ensured.
<Study of Effective Storage Period of Package> In the package according to the present embodiment, when the liquid stored in the second space is reduced by evaporation and its weight becomes about half or less,
It becomes difficult to open (peel) the weak seal portion by applying pressure. Therefore, the time required for the amount of liquid stored in the second space to decrease by half under the test conditions was calculated by the following equation.
Time (year) = (5 g / ΔW) × (28 days / 365 days) Here, ΔW: reduction amount of liquid after 4 weeks ΔW = 10 g × (rate of reduction of liquid after 4 weeks / 100)
As a result, 1.9 years was obtained in Example 1C, 2.2 years in Example 2C, 5.4 years in Example 3C, and 1 year in Example 4.
It is 2.7 years and 38.0 years in Example 5C.
From the above results, by using a packaging material having a steam barrier property as in Examples 1C to 5C,
It has been found that it is possible to suppress a decrease in the stored liquid and to hold the liquid for a long time.
[0240]
As described above, according to the present invention, a device such as a catheter can be easily and aseptically contacted with a liquid. In particular, the communication operation between the isolated spaces in the packaging material and the opening operation of the packaging material can be performed easily and reliably.
The type of liquid stored in the second space,
By selecting the composition, amount, etc., various functions are imparted to the device, in particular, advantageous functions such as surface lubrication and anticoagulation (antithrombotic) when inserting or attaching the device to a living body. Can be.
In addition, by storing used equipment in a packaging material, it is possible to prevent the emission of odors to the outside, the growth of microorganisms, or the prevention of contamination and infection due to leakage of liquid adhering or remaining on the equipment. And contribute to the improvement of safety. It is also advantageous for downsizing the package. Therefore, it is advantageous for the disposal of used equipment or for transportation and storage until disposal.
In particular, in the case of self-urination in which the patient himself urinates using a catheter, labor and mental burden are reduced in transporting and disposing of the used catheter when going out, so that the patient's comfortable life (quality Of life).
[Brief description of the drawings]

FIG. 1 is a plan view (an internal perspective view) showing a first embodiment of a package of the present invention.
FIG. 2 is a plan view (an internal perspective view) showing a third embodiment of the package of the present invention.
FIG. 3 is a plan view (an internal perspective view) showing a fourth embodiment of the package of the present invention.
FIG. 4 is a plan view (an internal perspective view) showing a fifth embodiment of the package of the present invention.
FIG. 5 is a plan view (an internal perspective view) showing a sixth embodiment of the package of the present invention.
FIG. 6 is a plan view (an internal perspective view) showing a seventh embodiment of the package of the present invention.
FIG. 7 is a plan view (an internal perspective view) showing an eighth embodiment of the package of the present invention.
FIG. 8 is a longitudinal sectional view illustrating a configuration example of a sealing member.
[Explanation of symbols]
DESCRIPTION OF SYMBOLS 1 Package 2 Packaging material 21 Seal part 22 Partition part 23, 24 Weak seal part 25 Partition part 26, 27 Weak seal part 28, 29 Partition part 3 Zipper 4 1st space 5 2nd space 6 3rd space 7 Catheter 8 Deodorant 81 Container 9 Antibacterial sheet 10 Fluid substance 11 Small packaging material 12 Water-absorbing material 13 Sealing member 131 Short tube 132 Cylindrical body 133 Solid columnar part 134 Breaking part 135 Upper end part 136 Reduced diameter part 14 Small packaging material

---

Continuation of front page (72)
Inventor Masaomi Imai 2-44-1, Hatagaya, Shibuya-ku, Tokyo Terumo Corporation F-term (reference) 3E067 AA03 AA11 AB83 AB96 AB97 AC06 BB12A BB14A BB15A BB16A BB25A CA05 CA09 CA24 EA06 EA25 EB17 EE21 GB15 GC05 GD08

Claims

1. A packaging material having a first space and a second space which are separated from each other by a partition portion and can communicate with each other when necessary. The packaging material is housed in the first space and inserted or attached to a living body for use. A device that is contained in the first space and eliminates or reduces odor; and a fluidity that is contained in the second space and is capable of contacting the surface of the device and reducing its frictional resistance. And a substance.
2. The package according to claim 1, wherein a main component of the substance that extinguishes or reduces the odor is titanium oxide.
3. A packaging material having a first space and a second space which are separated from each other by a partition portion and can communicate with each other when necessary, and which is stored in the first space and inserted or attached to a living body for use. A device that is stored in the first space and has a function of suppressing at least the growth of microorganisms; and a device that is stored in the second space and contacts the surface of the device to reduce its frictional resistance. And a flowable substance.
4. The package according to claim 3, wherein a main component of the substance having a function of suppressing the growth of microorganisms is titanium oxide.
5. A packaging material having a first space, a second space, and a third space which are separated from each other by a partition portion and can be communicated when necessary, and a packaging material which is housed in the first space and inserted into a living body or A device that is mounted and used; a fluid material that is stored in the second space and that can contact the surface of the device and reduce its frictional resistance; and a fluid that is stored in the third space and Characterized by comprising a substance capable of absorbing and retaining the compound.
6. A packaging material having a first space, a second space, and a third space which are separated from each other by a partition portion and can communicate when necessary, and a packaging material which is housed in the first space and inserted into a living body or A package comprising: a device to be mounted

and used; a blood anticoagulant stored in the second space; and a substance stored in the third space and capable of absorbing and holding a liquid. body.
7. The device according to claim 5, wherein the first space and the second space are formed adjacent to each other, and the first space and the third space are formed adjacent to each other. 7. The package according to 6.
8. The package according to claim 1, wherein the second space is formed inside the first space.
9. The partition section is formed of a sealing section formed by fusing sheet materials constituting the packaging material.
9. The package according to any one of items 1 to 8.
10. The package according to claim 1, wherein at least a part of the partition part is formed by a weak seal part having a lower joining strength than other parts.
11. The apparatus according to claim 1, further comprising: an opening for removing the device from the first space; and sealing means for sealing the opening after opening the opening. The package as described.
12. The package according to claim 1, wherein the packaging material has a steam barrier property.
13. The package according to claim 1, wherein the device is a catheter or a guide wire.
14. The package according to claim 1, wherein the device is a catheter used by being inserted into the urethra.
15. On at least a part of the surface of the device,
The package according to any one of claims 1 to 14, further comprising a compound exhibiting lubricity when wetted.

Copyright © 2022 Clarivate Analytics. All rights reserved. Republication or redistribution of Clarivate Analytics content, including by framing or similar means, is prohibited without the prior written consent of Clarivate Analytics. Clarivate and its logo are trademarks of the Clarivate Analytics group.

PACKAGE

DOCUMENT ID	DATE PUBLISHED
JP-2002068309-A	2002-03-08

INVENTOR INFORMATION

NAME	CITY	STATE	ZIP CODE	COUNTRY
NISHIZAWA YASUSHI	N/A	N/A	N/A	N/A
ASAI TOSHIYA	N/A	N/A	N/A	N/A
SHIMURA KENICHI	N/A	N/A	N/A	N/A

DATE FILED
2000-09-06

CPC CURRENT

TYPE	CPC	DATE
CPCI	A61M25/002	2013-01-01

Abstract

PROBLEM TO BE SOLVED: To provide a package wherein an internal container is hardly broken accidentally. SOLUTION: The package 1A comprises a catheter 7 and a container 8 with a liquid 89 sealed therein, which are received in a wrapping material 2A comprising a first sheet 28 and a second sheet 29. A first recess 231 is formed in the vicinity of the center of the first sheet 28, and a wall-like protrusion 25 is formed around the recess 231. A second recess 241 is formed outside the protrusion 25. The container 8 is received in the first recess 231, while the catheter 7 is received in the second recess 241. In such a package 1A, the wrapping material 2A in a part where the container 8 is received is thicker than the material 2A in a part where the catheter 7 is received. In addition, the protrusion 25 regulates a position of the container 8 to prevent a region where the liquid 89 is sealed from overlapping with the catheter 7.

Description

DETAILED DESCRIPTION OF THE INVENTION
[0001]
BACKGROUND OF THE INVENTION 1. Field of the Invention The present invention relates to a package.
[0002]
2. Description of the Related Art As a treatment method for various dysuria including neuropathic bladder, an intermittent self-urinating method (Clea
n Intermittent Catheterization (hereinafter abbreviated as “CIC”). CIC means that a person other than medical personnel, mainly the patient himself, inserts a catheter into the bladder,
This is a therapy that drains urine accumulated in the bladder. This CIC
Thus, the risk of urinary tract infection and kidney damage caused by urine accumulated in the bladder is reduced. This CIC
Can be performed when needed by the patient himself, and can be performed on the go, so the patient's

QOL (Qualit
It is extremely effective in improving y Of Life (quality of life).
In such a CIC, the catheter needs to have lubricity on its surface in order to prevent mucosal inflammation and mucosal damage when the catheter is inserted into the bladder. At present, catheters that exhibit lubricity when the surface is wetted have been used for CIC. Because such catheters are kept dry until just before use, during a long period of time until the catheter is used, the lubricant deteriorates or deteriorates, Peeling from the surface of the catheter is suitably prevented.
[0004]
In order to enable such a catheter to be wetted smoothly and aseptically, the assignee of the present application has disclosed that a catheter and a container containing a flowable substance are provided in one packing material. (Japanese Patent Application No. 11-088544). In this package, the catheter can be moistened by breaking the container housed in the package inside the package. By using this package, lubricating properties can be imparted to the surface of the catheter aseptically in the package immediately before use of the catheter. This reduces the risk of bacterial infection and makes CIC safer.
Can be performed.
In such a package, it is necessary to prevent the container from being unintentionally ruptured when not in use. For example, during storage or transportation, it is difficult for the container in the package to burst. In particular, CIC may be performed on the go by the patient. For this reason, it is desirable that the container in the package is not ruptured even when the patient forcibly pushes the package into a bag or a bag. Accordingly, an object of the present invention is to provide a package in which an internal container is less likely to break unintentionally.
[0007]
This and other objects are achieved by the present invention described below.
(1) A package comprising an instrument used by being inserted or inserted into a living body, a container sealed with a fluid substance, and a packaging material for accommodating the instrument and the container. A package body having a position regulating means for regulating a position of the container so that part or all of the container does not overlap with the device.
(2) A package comprising a device to be inserted or inserted into a living body, a container in which a fluid substance is sealed, and a packaging material for storing the device and the container. The portion of the container in which the fluid substance is sealed,
A package body having a position regulating means for regulating the position of the container so as not to completely overlap with the device.
(3) The position restricting means is constituted by a protruding portion protruding inside the packaging material.
Or the package according to (2).
(4) The package according to (3), wherein the protruding portion has a wall shape.
(5) The package according to (3) or (4), wherein the projecting portion is formed by molding the packaging material.
(6) The package according to any one of (3) to (5), wherein the protruding portion is adjacent to or in contact with the packaging material on the side opposite to the protruding portion.
(7) A package comprising a device to be inserted or inserted into a living body, a container in which a fluid substance is sealed, and a packaging material for storing the device and the container. A package body in which a thickness of the packaging material in a portion where the container is stored is smaller than a thickness of the packaging material in a portion where the device is stored.
(8) The thickness of the packaging material in the portion where the container is stored is not more than 4/5 of the thickness of the packaging material in the portion where the device is stored. Packaging.
(9) The wrapping material is obtained by stacking a flat sheet material with a bulged sheet material capable of storing the device and the container, and sealing the edges thereof. 8) The package according to any one of the above.
(10) The package according to any one of (1) to (9), wherein the container can be opened inside the packaging material without opening the packaging material.
(11) The container is formed by sealing a sheet material with a seal portion, and the container can be opened by providing a weak seal portion having a smaller bonding strength than the seal portion. The

package according to (10) above.
(12) The package according to the above (10) or (11), further comprising a guide surface for guiding the fluid substance flowing out of the container to the device.
(13) The package according to any one of (1) to (12), further including a concave portion for storing the container, wherein the shape of the concave portion corresponds to the shape of the container.
(14) The package according to any one of (1) to (13), wherein the device is a long device, and is installed in the packaging material so as to surround the container. .
(15) The package according to any one of (1) to (14), wherein the device is a catheter.
[0023]
DETAILED DESCRIPTION OF THE PREFERRED EMBODIMENTS Hereinafter, the present invention will be described in detail based on preferred embodiments shown in the accompanying drawings. FIG. 1 is an exploded perspective view showing a first embodiment of the package of the present invention. FIG.
FIG. 2 is an end view taken along line II of the package shown in FIG. 1.
As shown in FIG. 1, the package 1A is
A has a configuration in which a catheter 7 and a container 8 in which a liquid 89 is sealed are housed in A. The package 1A is used, for example, for an intermittent self-urinary method. For example, before opening the package 1A, the user strongly presses the container 8 to break it, and wets the catheter 7 with the liquid 89. afterwards,
The package 1A is opened, the catheter 7 is taken out, and the catheter 7 is inserted into the patient's body (for example, the urethra). First, the packaging material 2A will be described.
The packaging material 2A includes a pair of sheet materials, a first sheet material 28 and a second sheet material 29. As shown in FIG. 1, the first sheet material 28 and the second sheet material 29 have substantially the same planar shape (plan view shape), and both have a substantially square shape. Correspondingly, the planar shape of the packaging material 2A is also substantially square.
In the packaging material 2A, the first sheet material 28 and the second sheet material 29 are overlapped, and their edges are fused (heat fusion, high frequency fusion, ultrasonic fusion, or the like) or bonded (adhesive). Or adhesion with a solvent) to form a bag. In FIG. 1, the sealed portion is shown as hatching as a seal portion 21. As shown in FIG.
It is formed in a belt shape along the outer peripheral portion of the packaging material 2A.
As shown in FIGS. 1 and 2, the second sheet material 29 is formed (formed) into a flat shape. On the other hand, the first sheet material 28 is formed (formed) in a protruding shape (blister shape) capable of storing the catheter 7 and the container 8. In other words, the first sheet material 28
Has a bulge so that the catheter 7 and the container 8 can be stored therein. And inside this bulge (hereinafter,
The catheter 7 and the container 8 are stored in the “storage space 22”.
The storage space 22 is surrounded by a first sheet material 28, a second sheet material 29, and a seal portion 21 and is isolated from the outside. Therefore, the catheter 7 and the container 8 stored in the storage space 22 are preferably kept in a sterile state until use.
At least one corner of the packaging material 2A is provided with a peel tab (opening portion) 211 formed by not sealing the sheet material. For example, the second sheet material 29 is changed to the first sheet material 28 by the peel tab 211.
By pulling in the direction away from the
Is peeled off, and the packaging material 2A can be opened.
Hereinafter, the side where the storage space 22 is open (the upper side in FIGS. 1 and 2, that is, the side where the second sheet material 29 is located) is referred to as “upper”, and the side opposite to the upper side (FIG. In the lower part of FIG.
That is, the side on which the first sheet material 28 is located) is referred to as “down”.
In the vicinity of the center of the first sheet material 28, a first concave portion 231 having a substantially square planar shape is formed. The packaging material 2A stores the container 8 in the first recess 231. The first recess 231 is formed by molding the first sheet material 28. In the present embodiment, the first recess 231 forms a container storage section 23 that stores the container 8. The shape and size of the container storage portion 23, that is, the shape and size of the first concave portion 231 correspond to the shape and size of the container 8.

Around the first recess 231, the packaging material 2 A
Wall-shaped protruding portion 25 protruding into the interior (in the storage space 22)
Are formed. As shown in FIG.
Has a shape (an angular C-shape) in which one side of a square is open, and surrounds the container storage portion 23. The protrusion 25 has a function of regulating the position of the container 8 stored in the container storage 23. In particular,
The projecting portion 25 defines the position of the container 8 so that the portion (the internal space 81) in which the liquid 89 is sealed does not overlap with the catheter 8. As described above, in the package 1A, a position regulating unit that regulates the position of the container 8 by the protrusion 25 so that the portion where the liquid 89 is sealed does not overlap the catheter 8 is configured. In addition, the protrusion part 25 does not need to be made into a wall shape.
As shown in FIG. 2, the protruding portion 25 is adjacent to or in contact with the packaging material 2A on the opposite side of the protruding portion 25, that is, the second sheet material 29. Thereby, for example, the package 1
Even if the container 8 is violently shaken in the packaging material 2A by violently rocking the container A, the container 8 can be prevented from jumping out of the container storage portion 23 over the projecting portion 25 in a very suitable manner. Become. That is, when the protruding portion 25 is adjacent to or in contact with the second sheet material 29, the internal space 81 of the container 8 is less likely to overlap the catheter 7. Such an effect can be obtained more effectively when the gap between the protruding portion 25 and the second sheet material 29 (the distance between the protruding portion 25 and the second sheet material 29) is less than half the thickness of the container 8. Can be
In the packaging material 2A of the present embodiment, the protruding portion 25 is adjacent to or in contact with the second sheet material 29 over substantially the entire circumference, but the protruding portion 25 is partially adjacent to or in contact with the second sheet material 29. It only needs to be in contact. Further, the protrusion 25 may not be adjacent to or in contact with the second sheet material 29.
The projecting portion 25 is provided on the first sheet material 2.
8 is formed by molding. In this manner, when the protrusion 25 is formed integrally with the first sheet material 28, the number of components of the packaging material 2A can be reduced,
The manufacturing of the packaging material 2A can be performed more easily. Note that the protrusion 25 may not be provided.
Outside the protruding portion 25, a second concave portion 241 having a rectangular shape in plan view is formed. The packaging material 2A stores the catheter 7 in the second concave portion 241. The second recess 241 is formed by molding the first sheet material 28. In the present embodiment, the second
The concave portion 241 forms a catheter storage portion 24 that stores the catheter 7.
As shown in FIG. 1, a rib (engaging portion) 2 is provided along the long side of the packaging material 2A.
7 are provided. As shown in FIG.
Is formed so as to protrude from the inner wall 245 on the outer peripheral side of the second recess 241, and is located near the second sheet material 29, that is, above the catheter 7. The rib 27 is used for the first sheet material 2.
8 is formed by molding.
The rib 27 can engage (contact) the catheter 7 when the catheter 7 moves relatively upward. For this reason, for example, even when the second sheet material 29 is pulled vigorously to open the package 1 </ b> A and the catheter 7 flies upward, the catheter 7 is
7 is prevented (engaged) from jumping out of the packaging material 2A. Thus, in the package 1A, the rib 27

Thus, a pop-out preventing means for preventing the catheter 7 from popping out of the packaging material 2A when the packaging material 2A is opened is configured.
In the packaging material 2A, the bottom surface 23 of the first concave portion 231
2 is substantially parallel to the bottom surface 242 of the second recess 241. Therefore, when the package 1A is placed so that the bottom surface 242 of the second recess 241 is grounded, the bottom surface 232 of the first recess 231 is substantially horizontal.
As shown in FIG. 1, the catheter housing 24
A guide surface 26 is formed in a portion where the projecting portion 25 is not formed between the

container and the container storage portion 23. The guide surface 26 guides the liquid 89 flowing out of the container 8 to the catheter storage section 24, that is, the catheter 7. As shown in FIG. 1, the guide surface 26 has a substantially square shape, and one edge is adjacent to the container storage section 23, and the opposite edge is adjacent to the catheter storage section 24. FIG.
As shown in (2), the guide surface 26 is inclined at a predetermined angle from the bottom surface 242 of the second concave portion 241 and has a tapered shape.
As shown in FIG. 1, the guide surface 26
The protrusion 25 is located on one side of the square. In other words, when the packaging material 2 </ b> A is viewed in a plan view, the periphery of the container housing portion 23 is completely surrounded by the guide surface 26 and the protruding portion 25.
In such a package 1A, the thickness T1 of the packaging material 2A in the portion where the container 8 is stored is smaller than the thickness T2 of the packaging material 2A in the portion where the catheter 7 is stored.
As a result, the container 8 breaks before use of the package 1A, such as during storage or transportation of the package 1A, and the liquid 89
Is suitably prevented from leaking. As will be described later, the container 8 is strongly pressed or the like to

When the internal pressure increases, the liquid 89 breaks and the liquid 89 flows out of the container 8. In the package 1A of the present invention, since the thickness T1 is smaller than the thickness T2, an object hits the first sheet material 29 or the second sheet material 28 and a force is applied in a direction in which the package 2A is compressed. However, such a force is mainly applied to the catheter storage section 24 and not much to the container storage section 23. Therefore, even when a large number of packages 1A are pushed into a box or the like for storage or transportation, the pressing force against the packages 1A is mainly applied to the catheter storage section 24 in each package 1A. For this reason, the pressing force applied to the container 8 is reduced, and the internal pressure of the internal space 89 of the container 8 is prevented from being extremely increased.
Thereby, careless breakage of the container 8 is prevented.
In particular, in the package 1A, the thickness T1 is preferably set to 4/5 or less of the thickness T2, more preferably 2/3.
By setting the following, such an effect can be obtained more effectively.
In the package 1A of the present invention, the container 8 is also prevented from being inadvertently broken by the position restricting means (projection 25) described above. As described above, the catheter housing portion 24 is a portion where a pressing force from the outside is easily applied. For this reason, when the catheter housing portion 24 is deformed or the like, there is a possibility that an external pressing force is applied to the catheter 7 as well. In this case, if the internal space 81 of the container 8 overlaps the catheter 7, a pressing force from the outside to the package 1 </ b> A is applied to the portion of the container 8 where the liquid 89 is sealed via the catheter 7. there is a possibility.
In the package 1A of the present invention, such a situation is prevented by the position regulating means.
Package 1 of the present invention
In A, the position regulating means is such that the internal space 81 is the catheter 7
Therefore, the catheter 7 is prevented from pressing the portion of the container 8 where the liquid 89 is sealed. In the package 1A of the present invention, this also prevents the internal pressure of the internal space 81 from increasing, thereby preventing the container 8 from breaking. Therefore, for example, even when the edge of the package 1A is locally strongly pressed in a bag, a bag, or the like, the container 8 is preferably prevented from breaking.
Further, in the package 1A of the present embodiment,
The fact that the protruding portion 25 is adjacent to or in contact with the second sheet material 29 also contributes to the container 8 being hardly pressed. In the package 1A, when the vicinity of the center portion, that is, the container housing portion 23 is pressed, the protruding portion 25 can withstand this pressing force to some extent. Therefore, the pressing force applied to the container 8 is reduced. In particular, the package 1 of the present embodiment
When the protruding portion 25 has a wall shape as in A, such an effect can be obtained more effectively.
Furthermore, like the package 1A of the present embodiment, the first recess 231

When the shape and the size correspond to the shape and the size of the container 8, the protruding portion 25 comes to be located near the container 8.
This point also contributes to the improvement of such an effect. Further, such an effect can be more effectively obtained when the projecting portion 25 is formed so as to surround the container storage portion 23.
From the viewpoint of suitably obtaining such effects,
It is desirable that the packaging material 2A, particularly the first sheet material 28, have shape retention properties. Thereby, the above-described effects are more effectively obtained, and the container 8 is less likely to be unintentionally broken.
Further, it is preferable that the packaging material 2A, particularly the first sheet material 28, has a certain degree of flexibility. Thereby, at the time of use, the container 8 can be suitably broken. The packaging material 2A preferably includes ethylene oxide,
A material having gas permeability and heat resistance that can cope with sterilization of an autoclave, radiation, electron beam, or the like, or a material that can maintain sterility after sterilization is used. In addition, packaging material 2A
In order to prevent deterioration of the catheter, a material having a UV shielding effect can be used. In order to ensure the visibility of the contents, the first sheet material 28 and the second sheet material 2
It is preferable that at least one of 9 is transparent.
From such a viewpoint, the first sheet material 2
8. For the second sheet material 29, for example, polyolefin resins such as polyethylene and polypropylene, blend resins of these polyolefin resins, polyester resins such as polyethylene terephthalate, polystyrene, polyvinylidene chloride, vinyl chloride-vinylidene chloride copolymer, etc. A single-layer film, a film obtained by depositing aluminum, silica, or the like on these films, a metal foil such as an aluminum film or an aluminum laminate film, or a film containing a metal foil is preferably used. Further, a film obtained by laminating two or more of these films can also be used.
Further, a plastic nonwoven fabric or paper may be used as the sheet material. Needless to say, the first sheet material 28 and the second sheet material 29 may be made of other materials.
The thickness of the first sheet material 28 and the second sheet material 29 (single-layer or multi-layer laminate) depends on the layer structure and the characteristics of the material used (flexibility, strength, water vapor permeability, heat resistance, etc.). Is appropriately determined in accordance with, and is not particularly limited, but usually,
It is preferably about 60 to 700 μm, and 100 to 5 μm.
More preferably, it is about 00 μm. The thicknesses of the first sheet material 28 and the second sheet material 29 may be different or may be substantially the same.
The first sheet material 28 and the second sheet material 29 are formed by, for example, an inflation method, a T-die method, a blow molding method, a dry lamination method, a hot melt lamination method, a co-extrusion inflation method, a co-extrusion T-die. Law,
It can be manufactured by various methods such as a hot press method.
Hereinafter, the catheter 7 and the container 8 housed in the packaging material 2A will be described.
The catheter 7 housed in the packaging material 2A
It is a long instrument that is used by being inserted or attached to a living body. The catheter 7 is a strong device (especially more than the container 8) that is not easily broken by an external pressing force. Therefore, even when a certain amount of external force is applied to the catheter 7, the catheter 7 can withstand this external force.
As shown in FIG. 1, the catheter 7 is bent (curved) in an annular shape so as to surround the container 8, and is housed in the catheter housing 24. As described above, if the catheter 7 is curved in an annular shape and accommodated in the packaging material 2A, the length of the packaging material 2A can be shortened. For this reason, the package 1A becomes compact, and storage in a bag or bag becomes convenient. When the catheter 7 is installed so as to surround the container 8, for example, the package 1A Even when force is applied from various directions, the container 8 is suitably guarded by the catheter 7, so that the container 8 is not subjected to much force.
The catheter 7 has an insertion portion 71 to be inserted into a living body. The insertion portion 71 is

preferably formed of a flexible tube. The insertion portion 71 is required to smoothly insert into the living body, and for that purpose, a substance that expresses lubricity by wetting is applied to the whole or a part of the surface of the insertion portion 71. Is preferred.
Examples of such a substance include hydrophilic polymers as described in JP-A-60-259269 and JP-A-1-95863.
Also, for example, Japanese Patent Publication No. 6-32652,
No. 426, International Application WO8802623, International Application WO
8907521, International Application WO8909246, International Application WO900144, International Application WO9219289,
International application WO9311751, international application WO95297
22, Tokiohei 10-502854, Tokiohei 10-50
The materials and methods disclosed in Japanese Patent No. 2855 and Japanese Translation of PCT International Publication No. 10-502856 may be used. Such a substance usually exists on the surface of the insertion section 71 in a non-wetting state (dry state).
Such a substance is a polymer chemically bonded to the surface of the base material of the insertion portion 71, and is not peeled off from the surface of the base material or eluted into water, a physiological isotonic solution, other lubricants, or the like. Those which are unlikely to occur are preferred from the viewpoints of lubricity continuity and safety. For this reason, prior to use of the catheter 7, the liquid 89 ejected from the container 8 is brought into contact with the insertion portion 71, and the lubricity is developed by wetting.
The type, use, and the like of the catheter 7 stored in the packaging material 2A are not particularly limited, and include, for example, trachea, digestive tract, urethra, vagina, blood vessels, lymph vessels, bile ducts, and other body cavities. Examples include various catheters and balloon catheters inserted into various organs such as lungs, heart, and kidney, and other living tissues. Among these, a catheter (urethral catheter, urinary catheter) used by inserting into the urethra is particularly preferable.
The urinary drainage method for urinary disturbance is preferably an aseptic intermittent urinary drainage method instead of an indwelling catheter. In recent years, self-urinary drainage, in which patients themselves discharge urine using a catheter, has become widespread as an effective treatment method. . Dysuria is caused by obstruction of the urethra due to benign prostatic hyperplasia, stones, and tumors, and neuropathic bladder caused by disorders of the brain, spinal cord, and pelvic nerves. It is necessary to drain urine regularly because the internal pressure increases and places a burden on the kidneys. The self-guided urinary method performed at this time has the advantages of completely excreting urine at low pressure, reducing existing urinary infections, relieving urinary frequency, urinary incontinence, and not burdening the bladder and kidneys. The patient inserts a catheter into the bladder through the urethra about 4 to 6 times a day, and removes the urine when the urine has been discharged. The frequency is, for example, 4
Every 5 hours, the night is before bedtime.
The container 8 has an internal space 81 inside, and a liquid 89 is sealed and stored in the internal space 81.
In the present embodiment, the container 8 is in contact with or adjacent to the second sheet material 29 as well as the first sheet material 28.
The container 8 is formed, for example, by folding a central portion of a flat sheet material (inflation sheet material) and sealing the three sides by fusing (or bonding) to form a bag. An internal space 81 is formed inside the bag, and a liquid 89 is stored (filled) therein. Hereinafter, the portion of the container 8 where the sheet material is sealed is referred to as a seal portion 82. The container 8 is not limited to the one formed as shown in the figure. For example, both ends of a sheet material formed into a cylindrical shape are fused (or bonded) to form a bag, or two containers are formed. Sheets are laminated and the entire periphery is fused (or bonded).
Alternatively, it may be a bag.
As shown in FIG. 1 with a lattice, a part of the seal part 82 is a weak seal part (easy peel seal part) 83 having a lower joining strength (peeling strength) than the other part (seal part 821). It is configured. The sealing portion 821 is in a state where the opposing sheet materials are completely fused and firmly joined, while the weak sealing portion 83 is fused at a lower temperature and the like. The state is such that the clothes are somewhat incomplete. However, the liquid tightness (airtightness) is ensured also in the weak seal portion 83. And the effect lasts over time.

Therefore, for example, when the portion of the container 8 in which the liquid 89 is stored is pressed (pressed) to increase the internal pressure of the internal space 81, the weak seal portion 83 is peeled off (ruptured) preferentially. Thus, the internal space 81 communicates with the outside of the container 8, and the liquid 89 flows out of the container 8. As described above, in the container 8, the weak seal portion 83 forms an opening for opening the container 8.
In the package 1A of the present embodiment, the container 8 is
It can be pressed over the first sheet material 28 and the second sheet material 29. In particular, like the package 1A of the present embodiment, the container 8
Is more adjacent or in contact with the first sheet material 28 and the second sheet material 29, such an operation is further facilitated. Therefore, in the package 1A, the container 8 can be opened by an extremely simple operation in a state where the package 1A is not opened. In the present embodiment, the bottom surface 232 of the first recess 23 is formed.
Is substantially parallel to the second sheet material 29, which also contributes to easier pressing of the container 8. In addition, the method of peeling the weak seal portion 83 is not limited to the above-described method. For example, the weak seal portion 83 may be manually rubbed over a sheet material. The opening may be configured so that, for example, the seal width of the seal portion 82 is locally narrower than the seal width of other portions.
The thickness of such a container 8 depends on the catheter 7
Is preferably smaller than the thickness (outer diameter). Thereby, even if a strong force is applied to the package 1A and the first sheet material 28 is compressed and deformed, the force applied to the package 1A is mainly applied to the catheter 7. Therefore, the force applied to the container 8 is more suitably reduced, and the damage to the container 8 is more suitably prevented.
It is preferable that the container 8 has a vapor barrier property of the fluid substance stored in the internal space 81.
For example, when the fluid substance is water, the vapor barrier property means that the water vapor permeability is preferably 30 g / m .sup.2.
24hrs 25μm thickness 40 ℃ 90% RH or less,
More preferably 10 g / m .sup.2 .Math. 24 hrs .Math. 25 μm thickness .Math. 40 ° C. .Math. 90% RH or less, still more preferably 1 g / m
It refers to .sup.2 .Math. 24hrs .Math. .sup.25μm or less thick .Math. 40 ℃ .Math. 90% RH. This water vapor permeability is measured according to JIS K7
129 (method A). Container 8
By having a water vapor barrier property, evaporation of water from the inside of the container 8 can be prevented. As a result, the internal space 8
The reduction and concentration of the liquid 89 in the container 1 can be prevented, and the amount of the liquid 89 can be reduced to a minimum necessary amount, so that the volume and weight of the entire package 1A can be reduced.
Sheet material (film) constituting the container 8;
In particular, examples of the sheet material having the steam barrier property include the following. [1] a single-layer film composed of one kind of polyolefin resin, [2] a single-layer film composed of a blend resin of two or more incompatible polyolefin resins,
[3] A multilayer film of a polyolefin resin or a polyester resin using a polyolefin resin (a blended resin of a polyolefin resin can be used) for the sealant layer (a layer involved in fusion), [4] a sealant layer of the polyolefin resin (polyolefin resin). A film composed of a blended resin), a multi-layer film composed of a polyvinylidene chloride-coated polyolefin or polyester film, etc., [5] a sealant layer of a polyolefin resin (a blended resin of polyolefin resin can also be used) [6] The sealant layer is made of a polyolefin resin (polyolefin resin). Film composed of a blend resin can be used) of the fat, the intermediate layer is aluminum film,
A multilayer film composed of a polyester film or the like as the outermost layer, [7] a polyolefin resin as the sealant layer (a blended resin of the polyolefin resin can also be used), a nylon film as the intermediate layer, a polyolefin having the outermost layer deposited with aluminum or silica, or A multilayer film composed of a polyester film or the like. In this case, if one of a pair of sheet materials facing each other is

an opaque aluminum film and the other is a transparent water vapor barrier film such as a silica vapor-deposited film, the content of the container 8 is This is more preferable because it can be confirmed by visual recognition of an object. The aluminum film may be partly or wholly removable if necessary.
In the weak seal portion 83, a layer (sealant layer) directly involved in fusion is made of a blend resin of two or more incompatible polyolefin resins or a segment of two or more incompatible polyolefin resins. It is preferable to be composed of a random or block copolymer having the above.
The thickness of the sheet material (single-layer or multi-layer laminate) constituting the container 8 is appropriately determined according to the layer structure and the characteristics (flexibility, strength, water vapor permeability, heat resistance, etc.) of the material used. Although it is determined and not particularly limited, it is usually preferably about 20 to 700 μm,
More preferably, it is about 500 μm.
The sheet material constituting such a container 8 is as follows.
For example, inflation method, T-die method, blow molding method, dry lamination method, hot melt lamination method,
It can be manufactured by various methods such as a coextrusion inflation method, a coextrusion T-die method, and a hot press method.
The container 8 having the above-described characteristics is
For example, it can be suitably manufactured by referring to Japanese Patent Application No. Hei 11-088544.
The package 1A provided with such a container 8 is
It has the following effects (advantages). First, by selecting the capacity of the container 8 to be put in the packaging material 2A, the amount and weight of the contents (such as the liquid 89) of the container 8 can be easily set. Secondly, since the container 8 can be manufactured independently from the packaging material 2A, manufacturing and management are easy.
The liquid 89 stored in such a container 8
Is preferably a substance (liquid or semi-liquid) that can come into contact with the surface of the insertion section 71 of the catheter 7 and reduce its frictional resistance.
Examples of the liquid 89 include, but are not particularly limited to, water, physiologically isotonic liquids (physiological saline), oils such as glycerin, silicone oil and olive oil, and xylocaine jelly.
Hereinafter, an example of the method of use (action) of the package 1A will be described. As described above, in the package 1A of the present invention, the container 8 is hardly damaged during storage. After storage, when the medical device in the package 1A is used, the following operation is performed.
First, the container 8 is pressed and pressed from outside the packaging material 2A with a finger or the like. Thereby, the weak seal portion 83 is peeled (ruptured), and the liquid 89 flows out from the peeled portion. The liquid 89 flowing out of the container 8 travels on the guide surface 26 and flows into the catheter housing 24.
Then, the liquid 89 flowing into the catheter storage section 24
Spreads on the bottom surface 242 of the second recess 241. Thereby, the insertion portion 71 of the catheter 7 is wet (wet), and the surface of the insertion portion 71 exhibits lubricity. That is, the insertion portion 7
The frictional resistance of one surface is reduced. At this time, if necessary, an operation of alternately raising and lowering both ends (an end forming a short side or an end forming a long side) of the package 1A may be performed. As a result, the liquid 89 spreads more suitably in the catheter housing portion 24, and the insertion portion 71 becomes more evenly and more uniformly wet. After the container 8 is opened, if necessary, an operation of pressing (pressing) the container 8 with a finger or the like from the outside of the package 1A to discharge all the liquid 89 in the container 8 is performed. Good.
When the shape and size of the container storage section 23 substantially correspond to the shape and size of the container 8 as in the package 1A of the present embodiment, the inside of the container storage section 23 (the first recess 231). The amount of the liquid 89 remaining on the bottom surface 232) and not flowing into the catheter housing portion 24 is reduced. Therefore, the insertion portion 71 of the catheter 7 can be more efficiently wetted with a relatively small amount of the liquid 89.
As described above, when lubricity develops on the surface of the insertion portion 71 of the catheter 7, the

peel tab 211 is pulled, and the packaging material 2A is opened. Then, the catheter 7 is taken out of the packaging material 2A.
The catheter 7 removed from the packaging material 2A
Is inserted or attached to a target site of a living body. When the catheter 7 is a urethral catheter (urinary catheter), the insertion section 71 is inserted into the urethra and the bladder from the distal end side. At this time, since the surface of the insertion portion 71 has lubricity, the operation of inserting the catheter 7 can be performed smoothly and safely. Thereafter, the patient performs urination via the catheter 7.
As described above, if the package 1A is used, the operation of developing the lubricity on the surface of the insertion portion 71 of the catheter 7 can be performed in the sealed packaging material 2A without contact with the outside air. Therefore, in the package 1A of the present invention, the sterility of the catheter 7 is favorably maintained until immediately before use.
Hereinafter, a second embodiment of the package of the present invention will be described. In the following description, description of items common to the package of the first embodiment will be omitted, and different items will be mainly described. FIG. 3 is an end view showing a second embodiment of the package of the present invention. The upper and lower concepts of this embodiment are the same as those of the first embodiment.
As shown in the figure, in the package 1B, the first
The bottom surface 232 ′ of the concave portion 231 is
It is inclined at a predetermined angle with respect to 42 and has a tapered shape.
Specifically, the bottom surface 232 ′ is separated from the second sheet material 29 so as to be lowered in the direction of the guide surface 26 (the second concave portion 241).
(To get closer to the bottom surface 242). Correspondingly, the container 8 is moved away from the second sheet material 29 so that the weak seal portion 83 is lowered.
(Close to the bottom surface 242 of the container). Further, the guide surface 26 ′ is
Is almost perpendicular to the bottom surface 242 of the second.
When the packaging material 2A has such a structure, the liquid 89 can be formed without much operation such as tilting the package 1B.
Flows smoothly into the catheter storage section 24.
When the thickness T1 of the packaging material 2B at the portion where the container 8 is stored is not uniform as in the present embodiment, for example, the thickness near the center of the portion at which the container 8 is stored is reduced by the thickness It can be used as an index of the length T1.
Hereinafter, a third embodiment of the package of the present invention will be described. In the following description, description of items common to the package of the first embodiment will be omitted, and different items will be mainly described. FIG. 4 is an end view showing a third embodiment of the package of the present invention. The upper and lower concepts of this embodiment are the same as those of the first embodiment.
[0086] As shown in FIG.
The inner wall 245 on the outer peripheral side of the concave portion 241 has a tapered shape. More specifically, the inner wall 245 is inclined at a predetermined angle with respect to the normal line of the bottom surface 242 of the second recess 241, and the upper portion (the portion opposite to the bottom surface 242) protrudes toward the inside of the storage space 22. (Protruding).
The protruding portion (hereinafter referred to as protruding portion 27 ') of the upper portion of the inner wall 245 is formed along the long side of the packaging material 2C. This protruding portion (engaging portion) 2 7 ′ is located above the catheter 7. The protruding portion (projection) 27 ′ can engage (contact) with the catheter 7 when the catheter 7 relatively moves upward.
Further, in the package 1C of the present embodiment, when the catheter 7 is flipped upward, the catheter 7 The contact with the inner wall 245 on the outer peripheral side of the concave portion 241 is restricted from moving upward.
For this reason, in the package 1C of the present embodiment,
At the time of opening the packaging material 2C, it is possible to extremely suitably prevent the catheter 7 from jumping out of the packaging material 2C. In this embodiment, the pop-out prevention means includes a tapered inner wall 245.

And a protruding portion 27 '.
Hereinafter, a fourth embodiment of the package of the present invention will be described. In the following description, description of items common to the package of the first embodiment will be omitted, and different items will be mainly described. FIG. 5 is an exploded perspective view showing the first embodiment of the package of the present invention. FIG. 6 is an end view taken along line II-II of the package shown in FIG.
As shown in the figure, in the package 1D, the first
The concave portion 231 ′ and the container storage portion 23 ′ are located close to one long side. Further, as shown in FIG. 5, the planar shape of the protruding portion 25 'has a U-shape forming three sides of a square, and surrounds the container housing portion 23'. And the protruding part 25 'is open toward the long side.
In the package 1D of the present embodiment, since the container housing portion 23 'is installed close to the inner wall 245 on the outer peripheral side of the second concave portion 241', as shown in FIG.
The unsealed portion (weak seal portion 83) is in contact with or adjacent to the inner wall 245. Therefore, the liquid 8 flowing out of the container 8
9 comes into contact with the inner wall 245 and travels along the inner wall 245,
It will be guided to the catheter storage part 24 '. As described above, in the package 1D of the present embodiment, the inner wall 245 on the outer peripheral side of the second concave portion 241 ′ facing the unsealing portion of the container 8 causes
A guide surface 26 ″ for guiding the liquid 89 to the catheter 7 is formed.
As described above, the container storage portion 23 'is located at a position slightly shifted from the center of the packaging material 2D to one long side. For this reason, on the side where the container storage portion 23 ′ approaches the inner wall 245 on the outer peripheral side of the second concave portion 241 ′, the second
The area of the bottom surface (hereinafter, referred to as the bottom surface 242a) of the concave portion 241 'is small. On the other hand, the container storage section 23 '
Is on the side away from the inner wall 245,
42b).
In the package 1D of the present embodiment, the absorber 9 capable of absorbing and holding the liquid 89 and the like is provided on the bottom surface 242b, that is, in the catheter housing portion 24 'on the bottom surface 242b side. You. By putting the absorber 9 in the packaging material 2D, it becomes possible for the absorber 9 to absorb the excess liquid 89 after wetting the catheter 7.
The absorber 9 is not particularly limited, but
For example, polyacrylates, polyvinyl alcohols, polyacrylamides, synthetic polymers such as polyoxyethylene or maleic acid materials, and starch, cellulose, natural materials such as polysaccharide materials such as alginic acid, etc. Those composed of a polymer absorbing material are preferred. In addition, for example, sponge, cotton, gauze, non-woven fabric, and those in which the above-mentioned polymer water-absorbing material is carried (for example, those used in diapers, sanitary products, etc.)
Is also possible. Such an absorber 9 can take a form (shape) such as a block shape, a powder shape, a film shape, a sheet shape (plate shape), and a fibrous shape. 5 and 6, a block-shaped absorber 9 is shown as an example.
As described above, in the packaging material 2D of the present embodiment,
It is easy to secure a space for installing members other than the catheter 7 and the container 8 inside, and it is easy to install a new member such as the absorber 9 in such a space.
The new member such as the absorber 9 other than the catheter 7 and the container 8 is not particularly limited. In addition to the absorber 9, for example, a sheet capable of disinfecting the vicinity of the urethral opening before and after insertion of the catheter. And a deodorant that suppresses the odor generated before the used catheter is discarded, and an antibacterial agent that suppresses the growth of microorganisms such as bacteria and viruses.
Although the present invention has been described based on the preferred embodiments shown in the drawings, the present invention is not limited to these embodiments.

In the present invention, examples of the long catheter 7 used by being inserted or attached to a living body include the following. -Oral or nasal insertion of gastric tube catheter, feeding catheter, tube for tube feeding, oxygen catheter, oxygen cannula, tube or cuff for endotracheal tube, tube or cuff for tracheostomy tube, endotracheal suction catheter, etc. Indwelling catheters. Suction catheter, drainage catheter, peritoneal catheter,
Catheters to be inserted and placed in various body cavities, organs and tissues such as rectal catheters and trocars. Catheters to be inserted and placed in blood vessels such as angiography catheters, PTCA balloon catheters, IABP balloon catheters, indwelling catheters, and arterial infusion catheters.
Further, examples of long instruments used by being inserted or inserted into a living body include the following in addition to a catheter. -Various guide wires used alone or with each of the catheters. -Artificial blood vessels and stents. Injection needle, indwelling needle, catheter introducer. Endoscope, ultrasonic crushing probe. • sutures or ligatures.
Further, the instrument used by being inserted or inserted into the living body does not need to be long. Examples of the instrument used by being inserted or inserted into the living body accommodated in the package include the following, in addition to those described above. Cardiac output measuring instrument, ultrasonic measuring / diagnostic instrument, pacemaker, thermometer. -Artificial anus, artificial bone, artificial joint, prosthesis, artificial eye. .Math.sheath. .Math.enema. Contraceptive devices such as condoms.
In the embodiment described above, the liquid 89 is described as the fluid substance contained in the container 8.
May contain a substance having fluidity other than the liquid 89, for example, a gel-like or jelly-like substance, powder, granules, or the like. Note that the package may contain any other items than those described above.
[0103]
As described above, according to the present invention, it is possible to provide a package in which the internal container is less likely to break unintentionally. Therefore, for example, when the present invention is applied to the intermittent self-guiding method, the patient can carry the package of the present invention with ease, and even when away from home, easily and reliably perform self-guiding. be able to. Therefore, the present invention can greatly contribute to improving the quality of life of patients.
[Brief description of the drawings]
FIG. 1 is an exploded perspective view showing a first embodiment of a package of the present invention.
FIG. 2 is an end view taken along line II of the package shown in FIG. 1;
FIG. 3 is a vertical end view showing a second embodiment of the package of the present invention.
FIG. 4 is a vertical end view showing a third embodiment of the package of the present invention.
FIG. 5 is an exploded perspective view showing a fourth embodiment of the package of the present invention.
FIG. 6 is an end view taken along line II-II of the package shown in FIG. 5;
[Explanation of symbols]
1A, 1B, 1C, 1D Package 2A, 2B, 2C, 2D Packaging material 21 Seal part 211 Peel tab 22 Storage space 23, 23 'Container storage part 231, 231' First concave part 232, 232 'Bottom surface 24, 24' Catheter Storage portions 241, 241 'Second concave portion 242, 242a, 242b Bottom surface 245 Outer inner wall 25, 25' Projection portion 26, 26 ', 26 "Guide surface 27 Rib 27' Projecting portion 28 First sheet material 29 Second sheet Material 7 Catheter 71 Insertion part 8 Container 81 Inner space 82 Seal part 821 Seal part other than weak seal part 83 Weak seal part 89 Liquid 9 Absorber T1 Thickness of packaging material in which container was stored T2 Catheter was stored Part packaging material thickness

—— Continuing from the front page (72) Inventor Kenichi Shimura 1500 Inoguchi, Nakai-machi, Ashigara-gun, Kanagawa Prefecture Terumo Corporation F-term (reference) 3E067 AA11 AB83 AC06 BA02A BB14A BC07A CA24 EE44 GD08

Claims

Claims 1. A package comprising an instrument used by being inserted or inserted into a living body, a container in which a fluid substance is sealed, and a packaging material for accommodating the instrument and the container, A package, wherein a part or the whole of the container has a position regulating means for regulating a position of the container so as not to overlap the device.
2. A package comprising: an instrument used by being inserted or inserted into a living body; a container in which a fluid substance is sealed; and a packaging material for accommodating the instrument and the container. A package body having a position regulating means for regulating a position of the container so that a portion of the container in which the fluid substance is sealed does not completely overlap the device.
3. The positioning device according to claim 1, wherein the position restricting means comprises a projecting portion projecting into the packaging material.
A package according to item 1.
4. The package according to claim 3, wherein the protrusion has a wall shape.
5. The package according to claim 3, wherein the projecting portion is formed by molding the packaging material.
6. The package according to claim 3, wherein the protruding portion is adjacent to or in contact with the packaging material on the side opposite to the protruding portion.
7. A package comprising: a device used by being inserted or inserted into a living body; a container in which a fluid substance is sealed; and a packaging material for storing the device and the container, A package, wherein a thickness of the packaging material in a portion where the container is stored is smaller than a thickness of the packaging material in a portion where the device is stored.
8. The package according to claim 7, wherein the thickness of the packaging material in the portion where the container is stored is 4/5 or less of the thickness of the packaging material in the portion where the device is stored. .
9. The packaging material according to claim 1, wherein a flat sheet material is overlapped with a bulged sheet material capable of storing the device and the container, and their edges are sealed.
9. The package according to any one of items 1 to 8.
10. The package according to claim 1, wherein the container can be opened in the packaging material without opening the packaging material.
11. The container is formed by sealing a sheet material with a seal portion. By providing the container with a weak seal portion having a smaller bonding strength than the seal portion, the container can be opened. The package according to claim 10, wherein the package comprises:
12. The package according to claim 10, further comprising a guide surface for guiding the flowable substance flowing out of the container to the device.
13. The package according to claim 1, further comprising a recess for accommodating the container, wherein the shape of the recess corresponds to the shape of the container.
14. The package according to claim 1, wherein the device is a long device, and is installed in the packaging material so as to surround the container.
15. The package according to claim 1, wherein the device is a catheter.

Copyright © 2022 Clarivate Analytics. All rights reserved. Republication or redistribution of Clarivate Analytics content, including by framing or similar means, is prohibited without the prior written consent of Clarivate Analytics. Clarivate and its logo are trademarks of the Clarivate Analytics group.

(19)日本国特許庁（ＪＰ）　(12) 公開特許公報（Ａ）　(11)特許出願公開番号
特開2002－68309
（P2002－68309A）
(43)公開日　平成14年３月８日(2002.3.8)

(51)Int.Cl.⁷	識別記号	ＦＩ	テーマコード（参考）
Ｂ６５Ｄ　77/26		Ｂ６５Ｄ　77/26	Ｓ　３Ｅ０６７

審査請求　未請求　請求項の数15　ＯＬ　（全 12 頁）

(21)出願番号　特願2000－270726(P2000－270726)
(22)出願日　平成12年９月６日(2000.9.6)

(71)出願人　000109543
テルモ株式会社
東京都渋谷区幡ヶ谷２丁目44番１号
(72)発明者　西澤　裕史
神奈川県足柄上郡中井町井ノ口1500番地
テルモ株式会社内
(72)発明者　浅井　俊哉
神奈川県足柄上郡中井町井ノ口1500番地
テルモ株式会社内
(74)代理人　100091292
弁理士　増田　達哉

最終頁に続く

(54)【発明の名称】　包装体

(57)【要約】
【課題】内部の容器が不本意に破断しにくい包装体を提供すること。
【解決手段】包装体１Ａは、第１シート材２８と第２シート材２９とで構成された包材２Ａ内に、カテーテル７と、液体８９を密封した容器８とが収納された構成となっている。第１シート材２８の中央部付近には、第１凹部２３１が形成され、この第１凹部２３１の周囲には、壁状の突出部２５が形成されている。突出部２５の外側には、第２凹部２４１が形成されている。第１凹部２３１には、容器８が収納され、第２凹部２４１には、カテーテル７が収納される。このような包装体１Ａでは、容器８が収納された部分の包材２Ａの厚さは、カテーテル７が収納された部分の包材２Ａの厚さよりも薄くなっている。また、突出部２５は、液体８９が密封された部位がカテーテル７と重ならないように、容器８の位置を規定している。

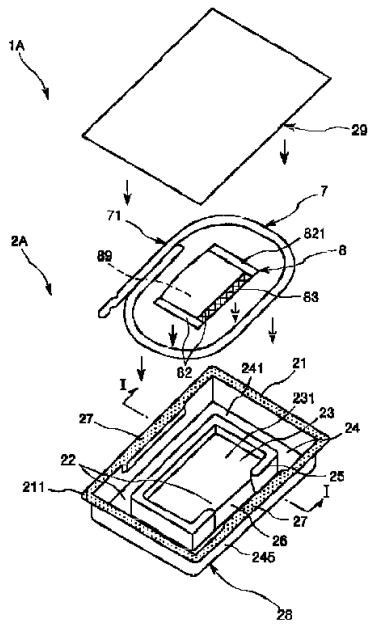

【特許請求の範囲】
【請求項１】　生体に挿入または挿着して使用される器具と、
流動性の物質が密封された容器と、
前記器具と前記容器とを収納する包材とを有する包装体であって、
前記容器の一部または全部が、前記器具に重ならないよう前記容器の位置を規制する位置規制手段を有することを特徴とする包装体。
【請求項２】　生体に挿入または挿着して使用される器具と、
流動性の物質が密封された容器と、
前記器具と前記容器とを収納する包材とを有する包装体であって、
前記容器の前記流動性の物質が密封された部位が、前記器具に完全に重ならないよう前記容器の位置を規制する位置規制手段を有することを特徴とする包装体。
【請求項３】　前記位置規制手段は、前記包材の内部に突出した突出部により構成されている請求項１または２に記載の包装体。
【請求項４】　前記突出部は、壁状をなしている請求項３に記載の包装体。
【請求項５】　前記突出部は、前記包材を成型して形成されたものである請求項３または４に記載の包装体。
【請求項６】　前記突出部は、前記突出部と反対側の包材に隣接または接触している請求項３ないし５のいずれかに記載の包装体。
【請求項７】　生体に挿入または挿着して使用される器具と、
流動性の物質が密封された容器と、
前記器具と前記容器とを収納する包材とを有する包装体であって、
前記容器が収納された部分の前記包材の厚さが、前記器具が収納された部分の前記包材の厚さよりも薄いことを特徴とする包装体。
【請求項８】　前記容器が収納された部分の前記包材の厚さが、前記器具が収納された部分の前記包材の厚さの４／５以下である請求項７に記載の包装体。
【請求項９】　前記包材は、前記器具および前記容器を収納可能な膨らみを有するシート材と平坦なシート材とを重ね、これらの縁部をシールしたものである請求項１ないし８のいずれかに記載の包装体。
【請求項１０】　前記容器は、前記包材を開封しないで前記包材内で開封可能である請求項１ないし９のいずれかに記載の包装体。
【請求項１１】　前記容器は、シート材をシール部によりシールしてなるものであり、
前記容器に前記シール部よりも接合強度が小さい弱シール部を設けたことにより、前記容器を開封可能とした請求項１０に記載の包装体。
【請求項１２】　前記容器から流出した前記流動性の物質を前記器具に案内するガイド面を有する請求項１０または１１に記載の包装体。
【請求項１３】　前記容器を収納する凹部を有し、
この凹部の形状は、前記容器の形状に対応している請求項１ないし１２のいずれかに記載の包装体。
【請求項１４】　前記器具は、長尺の器具であり、前記容器の周りを囲むように、前記包材内に設置される請求項１ないし１３のいずれかに記載の包装体。
【請求項１５】　前記器具は、カテーテルである請求項１ないし１４のいずれかに記載の包装体。
【発明の詳細な説明】
【０００１】
【発明の属する技術分野】本発明は、包装体に関するものである。
【０００２】
【従来の技術】神経因性膀胱をはじめとして様々な排尿障害に対する治療方法として、間歇式自己導尿法（Clean Intermittent Catheterization；以下「ＣＩＣ」と略す）が、普及してきている。ＣＩＣとは、医療関係者以外の人、主に患者自身がカテーテルを膀胱内に挿入し、膀胱内に溜まった尿を排出する療法である。このＣＩＣにより、膀胱内に溜まった尿によって引き起こされる尿路感染や腎臓障害の危険性が、低減される。このＣＩＣは、患者自身が必要な時に行うことができ、しかも、外出先でも行うことができるため、患者のＱＯＬ（Quality Of Life＝生活の質）を向上する上で、極めて有効である。
【０００３】このようなＣＩＣでは、カテーテルを膀胱内へ挿入する際に粘膜炎症や粘膜損傷が起きるのを防止するため、カテーテルは、表面に潤滑性を有することが必要とされる。現在、ＣＩＣには、表面を湿潤させると潤滑性が発現するようなカテーテルが用いられるようになってきている。このようなカテーテルは、使用直前まで乾燥状態が保たれるため、カテーテルが使用されるまでの長期間の間に、潤滑剤が変質したり、劣化したり、カテーテルの表面から剥離したりすることが好適に防止される。
【０００４】
【発明が解決しようとする課題】このようなカテーテルの湿潤を円滑かつ無菌的に行えるようにするため、本願特許出願人は、カテーテルと流動性の物質を入れた容器とを１個の包材内に収納した包装体を提案した（特願平１１－０８４８５４）。この包装体では、包装体内に収納した容器を包装体内で破断させることにより、カテーテルを湿潤させることができる。この包装体を用いれば、カテーテルの使用直前に、包装体内で無菌的に、カテーテルの表面に潤滑性を付与することができる。これにより、細菌感染の危険性が低減し、より安全にＣＩＣを行える。

【０００５】このような包装体では、非使用時に、不本意に容器が破裂しないようにする必要がある。例えば保管中や運搬中に、包装体中の容器が破裂しては困る訳である。特に、ＣＩＣは、患者が外出先で行う場合がある。このため、患者が鞄やバッグ等に包装体を強引に押し込んだ場合でも、包装体中の容器が破裂しないようにすることが望ましい。

【０００６】そこで、本発明の目的は、内部の容器が不本意に破断しにくい包装体を提供することにある。

【０００７】

【課題を解決するための手段】このような目的は、下記の本発明により達成される。

【０００８】（１）　生体に挿入または挿着して使用される器具と、流動性の物質が密封された容器と、前記器具と前記容器とを収納する包材とを有する包装体であって、前記容器の一部または全部が、前記器具に重ならないよう前記容器の位置を規制する位置規制手段を有することを特徴とする包装体。

【０００９】（２）　生体に挿入または挿着して使用される器具と、流動性の物質が密封された容器と、前記器具と前記容器とを収納する包材とを有する包装体であって、前記容器の前記流動性の物質が密封された部位が、前記器具に完全に重ならないよう前記容器の位置を規制する位置規制手段を有することを特徴とする包装体。

【００１０】（３）　前記位置規制手段は、前記包材の内部に突出した突出部により構成されている上記（１）または（２）に記載の包装体。

【００１１】（４）　前記突出部は、壁状をなしている上記（３）に記載の包装体。

【００１２】（５）　前記突出部は、前記包材を成型して形成されたものである上記（３）または（４）に記載の包装体。

【００１３】（６）　前記突出部は、前記突出部と反対側の包材に隣接または接触している上記（３）ないし（５）のいずれかに記載の包装体。

【００１４】（７）　生体に挿入または挿着して使用される器具と、流動性の物質が密封された容器と、前記器具と前記容器とを収納する包材とを有する包装体であって、前記容器が収納された部分の前記包材の厚さが、前記器具が収納された部分の前記包材の厚さよりも薄いことを特徴とする包装体。

【００１５】（８）　前記容器が収納された部分の前記包材の厚さが、前記器具が収納された部分の前記包材の厚さの４／５以下である上記（７）に記載の包装体。

【００１６】（９）　前記包材は、前記器具および前記容器を収納可能な膨らみを有するシート材と平坦なシート材とを重ね、これらの縁部をシールしたものである上記（１）ないし（８）のいずれかに記載の包装体。

【００１７】（１０）　前記容器は、前記包材を開封しないで前記包材内で開封可能である上記（１）ないし（９）のいずれかに記載の包装体。

【００１８】（１１）　前記容器は、シート材をシール部によりシールしてなるものであり、前記容器に前記シール部よりも接合強度が小さい弱シール部を設けたことにより、前記容器を開封可能とした上記（１０）に記載の包装体。

【００１９】（１２）　前記容器から流出した前記流動性の物質を前記器具に案内するガイド面を有する上記（１０）または（１１）に記載の包装体。

【００２０】（１３）　前記容器を収納する凹部を有し、この凹部の形状は、前記容器の形状に対応している上記（１）ないし（１２）のいずれかに記載の包装体。

【００２１】（１４）　前記器具は、長尺の器具であり、前記容器の周りを囲むように、前記包材内に設置される上記（１）ないし（１３）のいずれかに記載の包装体。

【００２２】（１５）　前記器具は、カテーテルである上記（１）ないし（１４）のいずれかに記載の包装体。

【００２３】

【発明の実施の形態】以下、本発明を添付図面に示す好適実施形態に基づいて詳細に説明する。図１は、本発明の包装体の第１実施形態を示す分解透視図である。図２は、図１に示す包装体のＩ－Ｉ線端面図である。

【００２４】同図に示すように、包装体１Ａは、包材２Ａ内に、カテーテル７と、液体８９を密封した容器８とが収納された構成となっている。この包装体１Ａは、例えば、間歇式自己導尿法などに用いられる。例えば、使用者は、包装体１Ａの開封前に、容器８を強く押圧して破断し、液体８９でカテーテル７を湿らせる。その後、包装体１Ａを開封してカテーテル７を取り出し、このカテーテル７を、患者の体内（例えば尿道等）に挿入する。まず始めに、包材２Ａについて説明する。

【００２５】包材２Ａは、一対のシート材、第１シート材２８と第２シート材２９とで構成されている。図１に示すように、これら第１シート材２８および第２シート材２９の平面形状（平面視形状）は、ほぼ同形状をなし、いずれも略四角形状をなしている。これに対応して、包材２Ａの平面形状も、略四角形状をなしている。

【００２６】包材２Ａは、第１シート材２８と第２シート材２９とを重ね、これらの縁部を融着（熱融着、高周波融着、超音波融着等）または接着（接着剤や溶剤による接着）によりシールして、袋状としたものである。図１では、シールされた部分をシール部２１として、網掛けを付して示す。同図に示すように、シール部２１は、包材２Ａの外周部に沿って、帯状に形成されている。

【００２７】図１および図２に示すように、第２シート材２９は、平坦な形状に成形（形成）されている。これに対し、第１シート材２８は、カテーテル７および容器８を収納可能な突出形状（ブリスター形状）に、成形（形成）されている。換言すれば、第１シート材２８

は、カテーテル７および容器８を収納できるように、膨らみを有している。そして、この膨らみの内部（以下、「収納空間２２」という）に、カテーテル７と容器８とが収納される。

【００２８】この収納空間２２は、第１シート材２８と第２シート材２９とシール部２１とで囲まれており、外部から隔離されている。したがって、収納空間２２内に収納されたカテーテル７および容器８は、使用時まで好適に無菌状態が保たれる。

【００２９】この包材２Ａの少なくとも一つの角部には、シート材をシールしないことにより形成したピールタブ（開封部）２１１が設けられている。このピールタブ２１１で例えば第２シート材２９を第１シート材２８から離間する方向に引っ張ることにより、シール部２１を剥離し、包材２Ａを開封することができる。

【００３０】以下、収納空間２２が開放している側（図１、図２中の上、すなわち第２シート材２９が位置する側）を「上」といい、上と反対側（図１、図２中の下、すなわち第１シート材２８が位置する側）を「下」という。

【００３１】第１シート材２８の中央部付近には、平面形状が略四角形の第１凹部２３１が形成されている。包材２Ａは、この第１凹部２３１内に容器８を収納する。この第１凹部２３１は、第１シート材２８を成型することにより形成されたものである。本実施形態では、この第１凹部２３１により、容器８を収納する部分である容器収納部２３が構成されている。この容器収納部２３の形状、大きさ、すなわち第１凹部２３１の形状、大きさは、容器８の形状、大きさに対応している。

【００３２】この第１凹部２３１の周囲には、包材２Ａの内部（収納空間２２内）に突出した壁状の突出部２５が形成されている。図１に示すように、この突出部２５の平面形状は、四角形の一辺が開放したような形状（角ばったＣの字状）をなし、容器収納部２３を囲んでいる。この突出部２５は、容器収納部２３に収納された容器８の位置を規制する機能を有している。具体的には、この突出部２５は、液体８９が密封された部位（内部空間８１）がカテーテル８と重ならないように、容器８の位置を規定している。このように、包装体１Ａでは、突出部２５により、液体８９が密封された部位がカテーテル８と重ならないように容器８の位置を規制する位置規制手段が、構成されている。なお、突出部２５は、壁状としなくてもよい。

【００３３】図２に示すように、突出部２５は、突出部２５と反対側の包材２Ａ、すなわち第２シート材２９に隣接または接触している。これにより、例えば包装体１Ａを激しく揺り動かしたりして、容器８が包材２Ａ内で激しく動いた場合でも、容器８が突出部２５を乗り越えて容器収納部２３の外に飛び出すことが、極めて好適に防止されるようになる。つまり、突出部２５が第２シート材２９に隣接または接触していると、容器８の内部空間８１が、カテーテル７に、より重なりにくくなる。このような効果は、突出部２５と第２シート材２９との間隙（突出部２５と第２シート材２９との距離）を、容器８の厚さの半分以下とすると、より効果的に得られる。なお、本実施形態の包材２Ａでは、突出部２５は、ほぼ全周にわたって第２シート材２９に隣接または接触しているが、突出部２５は、部分的に第２シート材２９に隣接または接触していればよい。また、突出部２５は、第２シート材２９に隣接または接触していなくてもよい。

【００３４】このような突出部２５は、第１シート材２８を成型することにより形成されたものである。このように、突出部２５を第１シート材２８と一体的に形成すると、包材２Ａの構成部材の数を削減することができ、包材２Ａの製造をより簡易に行うことができるようになる。なお、突出部２５は、設けなくてもよい。

【００３５】突出部２５の外側には、平面形状がロの字状の第２凹部２４１が形成されている。包材２Ａは、この第２凹部２４１内に、カテーテル７を収納する。この第２凹部２４１は、第１シート材２８を成型することにより形成されたものである。本実施形態では、この第２凹部２４１により、カテーテル７を収納する部分であるカテーテル収納部２４が構成されている。

【００３６】このカテーテル収納部２４には、図１に示すように、包材２Ａの長辺に沿って、リブ（係合部）２７が設けられている。図２に示すように、このリブ２７は、第２凹部２４１の外周側の内壁２４５に突出形成され、第２シート材２９の近傍、すなわちカテーテル７の上方に位置している。このリブ２７は、第１シート材２８を成型することにより形成されたものである。

【００３７】このリブ２７は、カテーテル７が相対的に上方に移動した場合、カテーテル７に係合（接触）することができる。このため、例えば第２シート材２９を勢いよく引っ張って包装体１Ａを開封し、カテーテル７が上方に弾んだ場合でも、かかるカテーテル７が、リブ２７に引っかかり（係合し）、包材２Ａから飛び出すことが防止される。このように、包装体１Ａでは、リブ２７により、包材２Ａの開封時にカテーテル７が包材２Ａから飛び出すのを防止する飛び出し防止手段が構成されている。

【００３８】包材２Ａでは、第１凹部２３１の底面２３２は、第２凹部２４１の底面２４２とほぼ平行になっている。したがって、第２凹部２４１の底面２４２が接地するように包装体１Ａを置くと、第１凹部２３１の底面２３２は、ほぼ水平になる。

【００３９】図１に示すように、カテーテル収納部２４と容器収納部２３との間の突出部２５が形成されていない部分には、ガイド面２６が、形成されている。このガイド面２６は、容器８から流出した液体８９を、カテーテル収納部２４、すなわちカテーテル７に案内する。図

１に示すように、ガイド面２６は略四角形状をなしており、一辺の縁部は容器収納部２３に隣接し、その反対側の縁部は、カテーテル収納部２４に隣接している。図２に示すように、ガイド面２６は、第２凹部２４１の底面２４２から所定角度傾斜して、テーパ状をなしている。

【００４０】図１に示すように、このガイド面２６は、突出部２５が構成する四角形の一辺上に、位置している。換言すれば、包材２Ａを平面視した場合、ガイド面２６と突出部２５とで、容器収納部２３の周囲は、完全に囲まれている。

【００４１】このような包装体１Ａでは、容器８が収納された部分の包材２Ａの厚さＴ１は、カテーテル７が収納された部分の包材２Ａの厚さＴ２よりも薄くなっている。

【００４２】これにより、包装体１Ａの保管時、運搬時等、包装体１Ａの使用前に、容器８が破断し、液体８９が漏れることが好適に防止されるようになる。後述するように、容器８は、強く押圧される等して内部空間８１の内圧が高まると、破断し、液体８９が容器８の外に流出するようになっている。本発明の包装体１Ａでは、厚さＴ１が厚さＴ２よりも薄いため、第１シート材２９や第２シート材２８に物が当たり、包装体２Ａが圧縮される方向に力が加わった場合でも、かかる力は、主にカテーテル収納部２４にかかり、容器収納部２３には、あまりかからない。したがって、保管や運搬のため、多数の包装体１Ａを箱等の中に押し込んだ場合でも、各包装体１Ａでは、包装体１Ａに対する押圧力は、主としてカテーテル収納部２４にかかるようになる。このため、容器８に加わる押圧力は低減され、容器８の内部空間８９の内圧が極度に増大することが、防止されるようになる。これにより、容器８の不用意な破断が防止される。

【００４３】特に、包装体１Ａでは、厚さＴ１を、好ましくは厚さＴ２の４／５以下に、より好ましくは２／３以下に設定すると、このような効果を、さらに効果的に得られるようになる。

【００４４】また、本発明の包装体１Ａでは、前述した位置規制手段（突出部２５）によっても、容器８の不用意な破断が防止される。前述したように、カテーテル収納部２４は、外からの押圧力がかかりやすい部分である。このため、カテーテル収納部２４が変形した場合等には、カテーテル７にも、外からの押圧力がかかる可能性がある。この場合、容器８の内部空間８１がカテーテル７に重なってしまうと、外からの包装体１Ａへの押圧力が、カテーテル７を介して、容器８の液体８９が密封された部位にかかってしまう可能性がある。

【００４５】本発明の包装体１Ａでは、位置規制手段により、このような事態が防止される。本発明の包装体１Ａでは、位置規制手段が、内部空間８１がカテーテル７と重なることを防止するので、カテーテル７が容器８の液体８９が密封された部位を押圧することが、防止される。本発明の包装体１Ａでは、これによっても、内部空間８１の内圧が高まることが防止され、容器８の破断が防止される。したがって、例えば、鞄やバッグ等の中で、包装体１Ａの縁部が局所的に強く押圧された場合でも、容器８が破断することが、好適に防止されるようになる。

【００４６】さらには、本実施形態の包装体１Ａでは、突出部２５が第２シート材２９に隣接または接触していることも、容器８が強く押圧されにくくなることに貢献している。包装体１Ａでは、中央部付近、すなわち容器収納部２３が押圧された場合、突出部２５がこの押圧力にある程度抗することができる。このため、容器８に加わる押圧力が緩和される。特に、本実施形態の包装体１Ａのように、突出部２５が壁状をなしていると、このような効果がより効果的に得られるようになる。さらには、本実施形態の包装体１Ａのように、第１凹部２３１の形状、大きさが容器８の形状、大きさに対応していると、突出部２５が容器８の近傍に位置するようになる。かかる点も、このような効果の向上に貢献している。また、このような効果は、突出部２５が容器収納部２３を囲むように形成されていると、さらに効果的に得られる。

【００４７】このような効果を好適に得る観点からは、包材２Ａ、特に第１シート材２８は、保形性を有することが望ましい。これにより、前述した効果がより効果的に得られ、容器８が、より不本意に破断しにくくなる。また、包材２Ａ、特に第１シート材２８は、ある程度の柔軟性を有することが好ましい。これにより、使用時には、容器８を好適に破断させることができるようになる。包材２Ａには、好ましくは、エチレンオキサイド、オートクレーブ、放射線、電子線等の滅菌に対応可能なガス透過性や耐熱性を有する材料、あるいは、滅菌後に無菌性を維持できる材料が用いられる。また、包材２Ａには、カテーテルの劣化を防ぐために、ＵＶ遮蔽効果のある材料を用いることもできる。なお、内容物の視認性を確保するために、第１シート材２８、第２シート材２９のうち少なくとも一方は、透明であることが好ましい。

【００４８】このような観点からは、第１シート材２８、第２シート材２９には、例えば、ポリエチレン、ポリプロピレン等のポリオレフィン樹脂、これらポリオレフィン樹脂のブレンド樹脂、ポリエチレンテレフタレート等のポリエステル樹脂、ポリスチレン、ポリ塩化ビニリデン、塩化ビニル−塩化ビニリデン共重合体等の単層フィルム、これらのフィルムにアルミニウム、シリカ等を蒸着したもの、アルミニウムフィルム、アルミニウムラミネートフィルム等の金属箔または金属箔を含むフィルムなどが、好適に用いられる。さらには、これら各フィルムを２層以上積層したものを用いることもできる。また、前記シート材としてプラスチック製不織布や紙を

用いてもよい。なお、第1シート材28および第2シート材29を、これ以外の材料で構成してもよいことは言うまでもない。

【0049】第1シート材28、第2シート材29（単層または多層積層体）の厚さは、その層構成や用いる素材の特性（柔軟性、強度、水蒸気透過性、耐熱性等）等に応じて適宜決定され、特に限定されないが、通常は、60〜700μm程度であるのが好ましく、100〜500μm程度であるのがより好ましい。なお、第1シート材28、第2シート材29の厚さは、異なるものとしてもよいし、ほぼ同じものとしてもよい。

【0050】このような第1シート材28、第2シート材29は、例えば、インフレーション法、Tダイ法、ブロー成型法、ドライラミネート法、ホットメルトラミネート法、共押出インフレーション法、共押出Tダイ法、ホットプレス法等の種々の方法により製造することができる。

【0051】以下、このような包材2Aに収納されるカテーテル7および容器8について説明する。

【0052】包材2A内に収納されるカテーテル7は、生体に挿入または装着して使用される長尺の器具である。このカテーテル7は、外部からの押圧力に対して容易に破壊されにくい（特に容器8よりも）強い器具である。このため、カテーテル7にある程度の外力が加わった場合でも、カテーテル7は、この外力に抗することができる。

【0053】図1に示すように、カテーテル7は、容器8の周りを囲むように環状に曲げられ（湾曲され）、カテーテル収納部24内に収納される。このように、カテーテル7を環状に湾曲させて包材2A内に収納するようにすると、包材2Aの長さを短くすることができる。このため、包装体1Aがコンパクトになり、鞄やバッグへの収納が便利になる。また、容器8の周りを囲むようにカテーテル7が設置されると、例えば、包装体1Aに、様々な方向から力が加わった場合でも、容器8は、カテーテル7で好適にガードされ、容器8には、あまり力が加わらないようになる。

【0054】カテーテル7は、生体内に挿入される挿入部71を有している。挿入部71は、好ましくは可撓性を有する管体で構成されている。この挿入部71は、生体内への挿入を円滑に行うことが必要とされ、そのために、挿入部71の表面の全体または一部には、湿潤により潤滑性を発現する物質が付与されているのが好ましい。

【0055】このような物質としては、例えば、特開昭60−259269号、特開平1−195863号公報に記載されているような親水性ポリマーが挙げられる。また、例えば、特公平6−32652号、特開平6−7426号、国際出願WO8802623、国際出願WO8907521、国際出願WO8909246、国際出願WO9001344、国際出願WO9219289、国際出願WO9311751、国際出願WO9529722、特表平10−502854号、特表平10−502855号、特表平10−502856号に開示されている物質や方法を用いてもよい。このような物質は、通常、挿入部71の表面に、湿潤していない状態（乾燥状態）で存在している。

【0056】このような物質は、挿入部71の基材表面に化学結合されたポリマーであって、該基材表面からの剥離や、水、生理等張液、その他潤滑剤等への溶出が生じ難いものが、潤滑性の持続性、安全性の点から好ましい。このようなことから、カテーテル7の使用に先立ち、容器8から噴出した液体89を挿入部71に接触させ、湿潤により潤滑性を発現させる。

【0057】包材2A内に収納されるカテーテル7の種類、用途等は、特に限定されず、例えば、気管、消化管、尿道、膣、血管、リンパ管、胆管、その他の体腔や、例えば、肺、心臓、腎臓等の各種臓器、その他の生体組織等へ挿入される種々のカテーテル、バルーンカテーテル等が挙げられる。この中でも、特に、尿道に挿入して使用されるカテーテル（尿道カテーテル、導尿カテーテル）が好ましい。

【0058】排尿障害における導尿法は、留置カテーテルではなく無菌間歇導尿法が好ましいが、近年、患者自身がカテーテルを使って尿を排出する自己導尿が有効な治療方法として普及してきている。排尿障害は、前立腺肥大症、結石、腫瘍などによる尿道閉塞や、脳・脊髄および骨盤神経などの障害により見られる神経因性膀胱によって起こるが、尿を完全に出しきれない状態になると、尿路内圧が上がって腎臓に負担をかけるので、定期的に尿を排出する必要がある。この際に行われる自己導尿法は、低圧で完全に尿を排出できるので、既にある尿感染が低減する、頻尿、尿失禁が治る、膀胱と腎臓に負担をかけない等の利点があり、患者自身が1日4〜6回程度、尿道から膀胱内にカテーテルを挿入し、尿の排出が終了したら抜去する。その頻度は、例えば、昼間は4〜5時間毎、夜間は就寝前とされる。

【0059】容器8は、内部に内部空間81を有し、この内部空間81内に、液体89を密封・貯留している。本実施形態では、この容器8は、第1シート材28のみならず、第2シート材29にも接触または隣接している。

【0060】この容器8は、例えば、平坦なシート材（インフレーションシート材）の中央部を折り曲げ三方を融着（または接着）によりシールし、袋状としたものである。この袋の内部に内部空間81が形成され、ここに、液体89が貯留（充填）される。以下、容器8のシート材がシールされた部分を、シール部82という。なお、容器8は、図示のように形成したものに限定されず、例えば、筒状に成形されたシート材の両端部を融着

（または接着）し、袋状としたもの、あるいは、２枚のシート材を重ね、その外周部全周を融着（または接着）し、袋状としたものでもよい。

【００６１】図1で格子を施して示すように、シール部８２の一部は、他の部分（シール部８２１）より接合強度（剥離強度）が弱い弱シール部（イージーピールシール部）８３で構成されている。シール部８２１は、対向するシート材同士が完全に融着され、強固な接合状態であるのに対し、弱シール部８３は、それより低温で融着する等により、対向するシート材同士の融着がある程度不完全であるような状態とされる。ただし、弱シール部８３においても、液密性（気密性）は、確保されている。そして、その効果は、経時的に持続する。

【００６２】したがって、例えば、容器８の液体８９が貯留された部分を押圧（圧迫）し、内部空間８１の内圧を高めると、弱シール部８３が優先的に剥離（破断）する。これにより、内部空間８１と容器８の外部とが連通し、液体８９が容器８の外に流出する。このように、容器８では、弱シール部８３により、容器８を開封する部分である開封口が構成されている。

【００６３】本実施形態の包装体１Ａでは、容器８を、第１シート材２８および第２シート材２９越しに押圧できる。特に、本実施形態の包装体１Ａのように、容器８が第１シート材２８および第２シート材２９に隣接または接触していると、かかる操作がさらに容易となる。したがって、包装体１Ａでは、包装体１Ａが未開封の状態で、極めて簡単な操作で、容器８を開封することができる。また、本実施形態では、第１凹部２３の底面２３２が第２シート材２９と略平行であることも、容器８の押圧がさらに容易となることに、寄与している。なお、弱シール部８３を剥離する方法は、上記方法に限定されず、例えば、弱シール部８３を、シート材越しに手で揉みほぐしてもよい。なお、開封口は、例えば、シール部８２のシール幅を、局所的に他の部分のシール幅よりも狭くするような構成としてもよい。

【００６４】このような容器８の厚さは、カテーテル７の厚さ（外径）よりも薄いことが好ましい。これにより、包装体１Ａに強い力が加わり、第１シート材２８が圧縮され、変形しても、包装体１Ａに加わる力は、主としてカテーテル７に加わることになる。このため、容器８に加わる力はより好適に低減され、容器８の破損がより好適に防止される。

【００６５】また、容器８は、内部空間８１に貯留される流動性物質の蒸気バリヤー性を有するのが好ましい。例えば、前記流動性物質が水である場合、この蒸気バリヤー性とは、水蒸気透過度が、好ましくは３０ｇ／m^2・２４ｈｒｓ・２５μｍ厚・４０℃・９０％ＲＨ以下、より好ましくは１０ｇ／m^2・２４ｈｒｓ・２５μｍ厚・４０℃・９０％ＲＨ以下、さらに好ましくは１ｇ／m^2・２４ｈｒｓ・２５μｍ厚・４０℃・９０％ＲＨ以下であることを言う。この水蒸気透過度は、ＪＩＳ Ｋ７１２９（Ａ法）に記載の方法により測定される。容器８が水蒸気バリヤー性を有することにより、容器８の内部からの水分の蒸散が防止できる。その結果、内部空間８１内の液体８９の減少、濃縮を防止することができるとともに、液体８９の量が必要最少限の量で済み、包装体１Ａ全体の容積や重量を小さくすることができる。

【００６６】容器８を構成するシート材（フィルム）、特に水蒸気バリヤー性を有するシート材としては、例えば、下記のものなどが挙げられる。

［１］１種のポリオレフィン樹脂で構成される単層フィルム、［２］２種以上の互いに相溶しないポリオレフィン樹脂のブレンド樹脂より構成される単層フィルム、［３］シーラント層（融着に関与する層）にポリオレフィン樹脂（ポリオレフィン樹脂のブレンド樹脂も使用可能）を用いたポリオレフィン樹脂もしくはポリエステル樹脂の多層フィルム、［４］シーラント層がポリオレフィン樹脂（ポリオレフィン樹脂のブレンド樹脂も使用可能）より構成されるフィルム、外層がポリ塩化ビニリデンをコーティングしたポリオレフィンまたはポリエステルフィルム等で構成される多層フィルム、［５］シーラント層がポリオレフィン樹脂（ポリオレフィン樹脂のブレンド樹脂も使用可能）より構成されるフィルム、外層がアルミ蒸着もしくはシリカ蒸着されたポリオレフィンフィルムまたはポリエステルフィルム等で構成される多層フィルム、［６］シーラント層がポリオレフィン樹脂（ポリオレフィン樹脂のブレンド樹脂も使用可能）より構成されるフィルム、中間層がアルミニウムフィルム、最外層がポリエステルフィルム等で構成される多層フィルム、［７］シーラント層がポリオレフィン樹脂（ポリオレフィン樹脂のブレンド樹脂も使用可能）、中間層がナイロンフィルム、最外層がアルミ蒸着もしくはシリカ蒸着されたポリオレフィンまたはポリエステルフィルム等で構成される多層フィルム、この場合、対向する一対のシート材のうちの一方を不透明なアルミニウムフィルム、他方をシリカ蒸着フィルム等の透明な水蒸気バリヤー性フィルムとすれば、容器８の内容物の視認による確認が行えるので、さらに好ましい。なお、アルミニウムフィルムは、必要に応じその一部もしくは全部が剥離除去可能であってもよい。

【００６７】なお、弱シール部８３においては、直接融着に関与する層（シーラント層）が２種以上の互いに相溶しないポリオレフィン樹脂のブレンド樹脂、もしくは２種以上の互いに相溶しないポリオレフィンをセグメントに有するランダムもしくはブロック共重合体で構成されていることが好ましい。

【００６８】容器８を構成するシート材（単層または多層積層体）の厚さは、その層構成や用いる素材の特性（柔軟性、強度、水蒸気透過性、耐熱性等）等に応じて適宜決定され、特に限定されるものではないが、通常

は、２０〜７００μm程度であるのが好ましく、４０〜５００μm程度であるのがより好ましい。

【００６９】このような容器８を構成するシート材は、例えば、インフレーション法、Tダイ法、ブロー成型法、ドライラミネート法、ホットメルトラミネート法、共押出インフレーション法、共押出Tダイ法、ホットプレス法等の種々の方法により製造することができる。

【００７０】なお、以上述べた特性を有する容器８は、例えば特願平１１−０８４８５４を参照することにより、好適に製造することができる。

【００７１】このような容器８を備えた包装体１Aは、次のような効果（利点）を有する。第１に、包材２A内に入れる容器８の容量を選択することにより、容器８の内容物（液体８９等）の量や重量を容易に設定することができる。第２に、容器８は、包材２Aとは別個に単独で製造可能なので、製造・管理がしやすい。

【００７２】このような容器８内に収納される液体８９は、カテーテル７の挿入部７１の表面と接触して、その摩擦抵抗を低減させることができる物質（液状または半液状物）であるのが好ましい。

【００７３】このような液体８９としては、特に限定されないが、例えば、水、生理等張液（生理食塩水）、グリセリン、シリコーンオイル、オリーブオイル等のオイル類、キシロカインゼリー等が挙げられる。

【００７４】以下、包装体１Aの使用方法（作用）の一例について説明する。前述したように、本発明の包装体１Aは、保管中に、容器８が破損しにくい。保管後、包装体１A内の医療器具を使用する際には、下記のような操作を行う。

【００７５】まず、包材２Aの外部から容器８を指等で押圧・圧迫する。これにより、弱シール部８３が剥離（破断）して、かかる剥離した部分から、液体８９が流出する。

【００７６】容器８から流出した液体８９は、ガイド面２６上を伝わり、カテーテル収納部２４内へ流入する。そして、このカテーテル収納部２４へ流入した液体８９は、第２凹部２４１の底面２４２で広がる。これにより、カテーテル７の挿入部７１が濡れ（湿潤し）、挿入部７１の表面に、潤滑性が発現する。つまり、挿入部７１表面の摩擦抵抗が低減する。このとき、必要に応じて、包装体１Aの両端（短辺を構成する端部、あるいは長辺を構成する端部）を交互に上下させる等の操作を行ってもよい。これにより、液体８９がより好適にカテーテル収納部２４内に広がり、挿入部７１が、より満遍なく、より均一に濡れるようになる。なお、容器８を開封後、必要に応じて、包装体１Aの外部から容器８を指等で押圧（圧迫）する等して、容器８内の液体８９を残らず排出する操作を行ってもよい。

【００７７】本実施形態の包装体１Aのように、容器収納部２３の形状、大きさが容器８の形状、大きさにほぼ対応していると、容器収納部２３内（第１凹部２３１の底面２３２）に残存しカテーテル収納部２４に流れない液体８９の量が減少する。このため、比較的少ない液体８９の量で、より効率よくカテーテル７の挿入部７１を濡らすことができる。

【００７８】以上のようにして、カテーテル７の挿入部７１の表面に潤滑性が発現したら、ピールタブ２１１を引っ張って、包材２Aを開封する。そして、カテーテル７を包材２A内から取り出す。

【００７９】包材２Aから取り出されたカテーテル７は、生体の目的部位に挿入または装着される。カテーテル７が尿道カテーテル（導尿カテーテル）である場合には、挿入部７１を先端側から尿道および膀胱に挿入する。このとき、挿入部７１の表面が潤滑性を有しているため、カテーテル７の挿入操作を、円滑かつ安全に行うことができる。その後、患者は、カテーテル７を介して排尿を行う。

【００８０】このように、包装体１Aを用いれば、カテーテル７の挿入部７１の表面に潤滑性を発現させる操作を、密閉された包材２A内で外気と接触することなく行うことができる。したがって、本発明の包装体１Aでは、カテーテル７は、使用直前まで、無菌性が良好に保たれる。

【００８１】以下、本発明の包装体の第２実施形態について説明する。なお、以下の説明では、第１実施形態の包装体と共通する事項については説明を省略し、相違する事項を中心に説明する。図３は、本発明の包装体の第２実施形態を示す端面図である。なお、本実施形態の上下の概念は、第１実施形態と同様である。

【００８２】同図に示すように、包装体１Bでは、第１凹部２３１の底面２３２’が、第２凹部２４１の底面２４２に対して所定角度傾斜し、テーパ状をなしている。詳しくは、底面２３２’は、ガイド面２６の方向に下がるように（第２シート材２９から離間し第２凹部２４１の底面２４２に近づくように）、テーパ状をなしている。これに対応して、容器８は、弱シール部８３が下がるように（第２シート材２９から離間し第２凹部２４１の底面２４２に近づくように）、容器収納部２３に設置されている。また、ガイド面２６’は、第２凹部２４１の底面２４２とほぼ直行している。

【００８３】包材２Aをこのような構成にすると、包装体１Bを傾ける等の操作をあまりしなくても、液体８９が、カテーテル収納部２４内に、円滑に流れて行くようになる。

【００８４】本実施形態のように、容器８が収納された部分の包材２Bの厚さＴ１が均一でない場合は、例えば、容器８が収納された部分の中央部付近の厚さを、厚さＴ１の指標とすることができる。

【００８５】以下、本発明の包装体の第３実施形態について説明する。なお、以下の説明では、第１実施形態の

包装体と共通する事項については説明を省略し、相違する事項を中心に説明する。図4は、本発明の包装体の第３実施形態を示す端面図である。なお、本実施形態の上下の概念は、第１実施形態と同様である。

【００８６】同図に示すように、包装体１Ｃでは、第２凹部２４１の外周側の内壁２４５が、テーパ状をなしている。詳しくは、内壁２４５は、第２凹部２４１の底面２４２の法線に対して所定角度傾斜しており、その上部（底面２４２と反対側の部分）が、収納空間２２の内部に向かってせり出している（突出している）。

【００８７】この内壁２４５上部のせり出した部分（以下、せり出し部２７’という）は、包材２Ｃの長辺に沿って、形成されている。このせり出し部（係合部）２７’は、カテーテル７の上方に位置している。このせり出し部（凸部）２７’は、カテーテル７が上方に相対的に移動した場合、カテーテル７に係合（接触）することができる。

【００８８】しかも、本実施形態の包装体１Ｃでは、カテーテル７が上方に弾んだ場合、カテーテル７は、第２凹部２４１の外周側の内壁２４５に当接して、上方への移動が規制されることとなる。

【００８９】このため、本実施形態の包装体１Ｃでは、包材２Ｃの開封時にカテーテル７が包材２Ｃから飛び出すことが、極めて好適に防止されるようになる。本実施形態では、飛び出し防止手段は、テーパ状の内壁２４５と、せり出し部２７'とにより、構成されている。

【００９０】以下、本発明の包装体の第４実施形態について説明する。なお、以下の説明では、第１実施形態の包装体と共通する事項については説明を省略し、相違する事項を中心に説明する。図5は、本発明の包装体の第１実施形態を示す分解透視図である。図6は、図5に示す包装体のII−II線端面図である。

【００９１】同図に示すように、包装体１Ｄでは、第１凹部２３１’および容器収納部２３’は、一方の長辺に接近して位置している。また、突出部２５’の平面形状は、図5に示すように、四角形の三辺を構成するコの字状をなし、容器収納部２３’を囲んでいる。そして、突出部２５’は、長辺に向かって、開放している。

【００９２】本実施形態の包装体１Ｄでは、容器収納部２３’が、第2凹部２４１’の外周側の内壁２４５に接近して設置されているため、図6に示すように、容器８の開封部（弱シール部８３）は、内壁２４５に当接または隣接している。このため、容器8から流出した液体８９は、内壁２４５に接触し、この内壁２４５を伝って、カテーテル収納部２４’に案内されることとなる。このように、本実施形態の包装体１Ｄでは、容器８の開封部に臨む第２凹部２４１’の外周側の内壁２４５により、液体８９をカテーテル７に案内するガイド面２６”が構成されている。

【００９３】前述したように、容器収納部２３’は、包材２Ｄの中央部から一方の長辺側に若干ずれたところに位置している。このため、容器収納部２３’が第2凹部２４１’の外周側の内壁２４５に接近した側では、第２凹部２４１’の底面（以下、底面２４２ａという）の面積が小さくなっている。これに対し、容器収納部２３’が内壁２４５から離間した側では、底面（以下、底面２４２ｂという）の面積が大きくなっている。

【００９４】そして、本実施形態の包装体１Ｄでは、底面２４２ｂ上に、すなわち底面２４２ｂ側のカテーテル収納部２４’内に、液体８９等を吸収し、保持することができる吸収体９が設置される。吸収体９を包材２Ｄ内に入れることにより、吸収体９に、カテーテル７を濡らした後の余剰の液体８９を吸収させることが可能となる。

【００９５】吸収体９としては、特に限定されないが、例えば、ポリアクリル酸塩系、ポリビニルアルコール系、ポリアクリルアミド系、ポリオキシエチレン系またはマレイン酸系材料等の合成ポリマーや、デンプン、セルロース、アルギン酸のような多糖類材料等の天然材料等のような高分子吸収材料で構成されたものが好ましい。また、その他、例えば、スポンジ、綿、ガーゼ、不織布やそれらに前記高分子吸水性材料を担持したもの（例えば、おむつ、生理用品等に用いられているもの）も可能である。このような吸収体９は、ブロック状、粉末状、フィルム状、シート状（板状）、繊維状などの形態（形状）をとることができる。図5、６では、一例として、ブロック状の吸収体９を示した。

【００９６】このように、本実施形態の包材２Ｄでは、内部にカテーテル７および容器８以外の部材を設置するスペースを確保することが容易となり、かかるスペースに、吸収体９等の新たな部材を設置することが容易となる。

【００９７】吸収体９のようなカテーテル７および容器８以外の新たな部材としては、特に限定されないが、吸収体９の他に、例えば、カテーテル挿入前後に尿道口付近を消毒することができるシート、使用済みカテーテルを廃棄するまでに発生する臭気を抑制する脱臭剤、細菌、ウイルス等の微生物の繁殖を抑制する抗菌剤などが挙げられる。

【００９８】以上、本発明を図示の好適実施形態に基づいて説明してきたが、本発明はこれに限定されるものではない。

【００９９】本発明において、生体に挿入または装着して使用される長尺のカテーテル７としては、例えば、以下のようなものが挙げられる。

・胃管カテーテル、栄養カテーテル、経管栄養用チューブ、酸素カテーテル、酸素カヌラ、気管内チューブのチューブやカフ、気管切開チューブのチューブやカフ、気管内吸引カテーテル等の経口または経鼻的に挿入、留置されるカテーテル類。

・吸引カテーテル、排液カテーテル、腹腔カテーテル、直腸カテーテル、トロッカー等の各種体腔、臓器、組織内に挿入、留置されるカテーテル類。
・血管造影用カテーテル、ＰＴＣＡ用バルーンカテーテル、ＩＡＢＰ用バルーンカテーテル、静脈留置カテーテル、動注用カテーテル等の血管内に挿入、留置されるカテーテル類。
【０１００】さらには、生体に挿入または挿着して使用される長尺の器具としては、カテーテルの他に、例えば、以下のようなものが挙げられる。
・単独で、または、前記各カテーテル類とともに使用される各種ガイドワイヤー。
・人工血管、ステント。
・注射針、留置針、カテーテルイントロデューサ。
・内視鏡、超音波破砕プローブ。
・縫合用または結紮用の糸。
【０１０１】さらには、生体に挿入または挿着して使用される器具は、長尺状のものでなくてもよい。包装体に収納される生体に挿入または挿着して使用される器具としては、上述したもの以外に、例えば、以下のようなものが挙げられる。
・心拍出量測定器具、超音波測定・診断器具、ペースメーカー、体温計。
・人工肛門、人工骨、人工関節、補綴物、義眼。
・シース。
・浣腸。
・コンドーム等の避妊具。
【０１０２】以上述べた実施形態では、容器８に収納される流動性の物質として、液体８９を挙げたが、容器８には、液体８９以外の流動性を有する物質、例えば、ゲル状、ゼリー状の物、粉体、粒体などを収納してもよい。なお、包装体内には、前述した以外の任意のものが収納されていてもよい。
【０１０３】
【発明の効果】以上述べたように、本発明によれば、内部の容器が不本意に破断しにくい包装体を提供することができる。したがって、例えば本発明を間歇式自己導尿法に適用した場合、患者は、本発明の包装体を安心して携行することができ、しかも、外出先においても、簡便かつ確実に自己導尿を行うことができる。よって、本発明は、患者の生活の質の向上に、大きく貢献できる。
【図面の簡単な説明】
【図１】本発明の包装体の第１実施形態を示す分解透視図である。
【図２】図１に示す包装体のＩ−Ｉ線端面図である。
【図３】本発明の包装体の第２実施形態を示す縦端面図である。
【図４】本発明の包装体の第３実施形態を示す縦端面図である。
【図５】本発明の包装体の第４実施形態を示す分解透視図である。
【図６】図５に示す包装体のII−II線端面図である。
【符号の説明】

１Ａ、１Ｂ、１Ｃ、１Ｄ	包装体
２Ａ、２Ｂ、２Ｃ、２Ｄ	包材
２１	シール部
２１１	ピールタブ
２２	収納空間
２３、２３’	容器収納部
２３１、２３１’	第１凹部
２３２、２３２’	底面
２４、２４’	カテーテル収納部
２４１、２４１’	第２凹部
２４２、２４２ａ、２４２ｂ	底面
２４５	外周側の内壁
２５、２５’	突出部
２６、２６’、２６”	ガイド面
２７	リブ
２７’	せり出し部
２８	第１シート材
２９	第２シート材
７	カテーテル
７１	挿入部
８	容器
８１	内部空間
８２	シール部
８２１	弱シール部以外のシール部
８３	弱シール部
８９	液体
９	吸収体
Ｔ１	容器が収納された部分の包材の厚さ
Ｔ２	カテーテルが収納された部分の包材の厚さ

【図1】

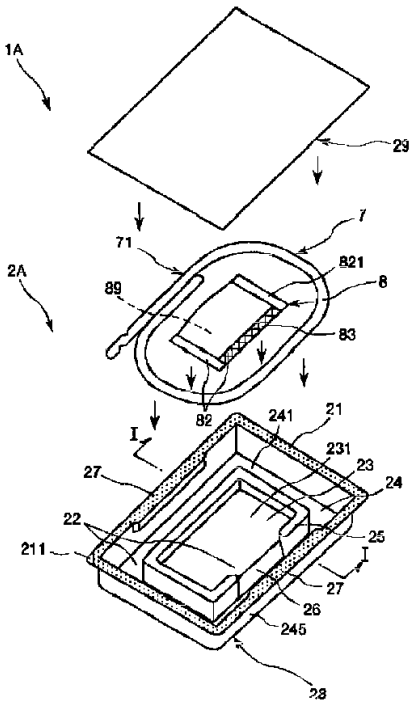
1A
29
7
71
821
8
2A
89
83
82
241
21
I
231
23
24
27
22
25
211
I
27
26
245
28

【図5】

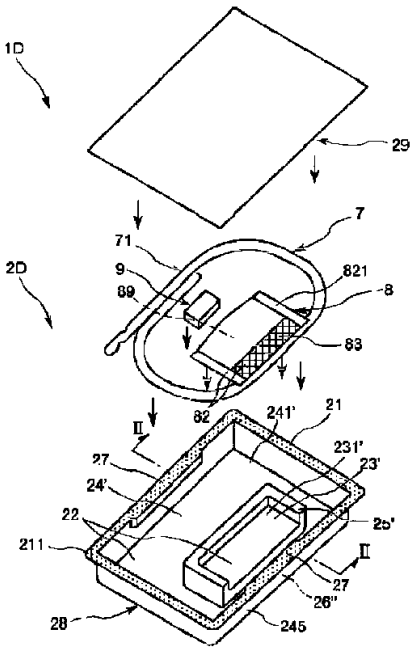
1D
29
7
71
9
821
2D
89
8
83
82
241'
21
II
231'
23'
27
24'
22
25'
211
II
27
26"
28
245

【図2】

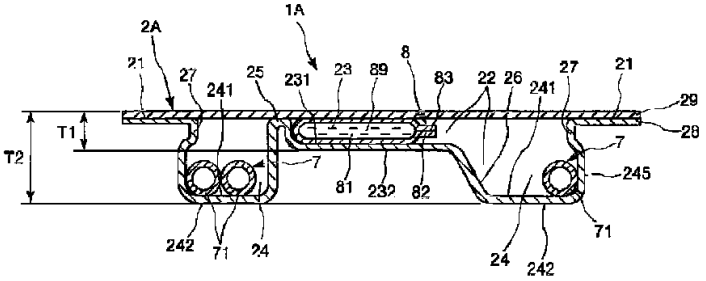
1A
2A
21
27
241
25
231
23
89
8
83
22
26
241
27
21
29
28
T1
T2
7
7
245
81
232
82
71
242
71
24
24
242

【図6】

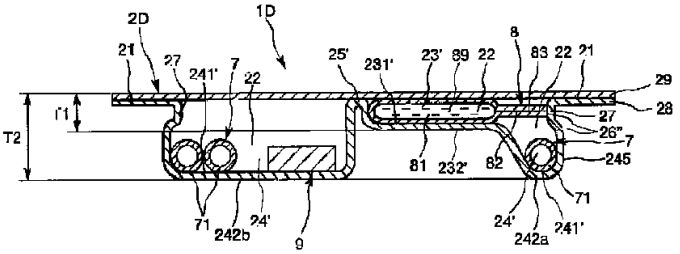
2D
1D
21
27
241'
7
22
25'
231'
23'
89
22
8
83
22
21
29
28
T1
T2
27
26"
7
245
81
232'
82
71
71
242b
24'
9
24'
242a
241'

【図3】

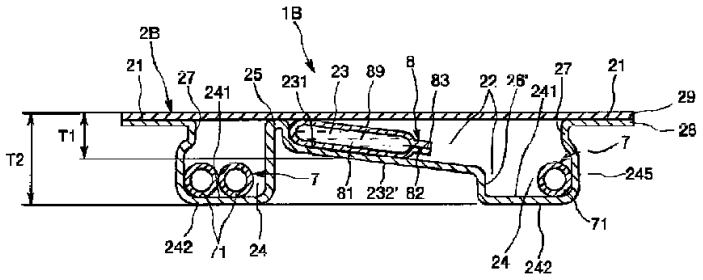

【図4】

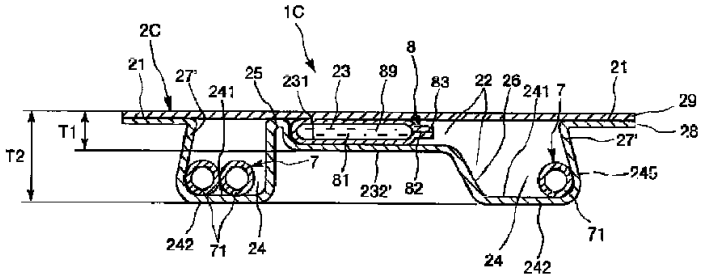

フロントページの続き

(72)発明者　志村　賢一
神奈川県足柄上郡中井町井ノ口1500番地
テルモ株式会社内

Fターム(参考)　3E067 AA11 AB83 AC06 BA02A
BB14A BC07A CA24 EE44
GD08

(19)日本国特許庁（ＪＰ）　(12) 公開特許公報（Ａ）　(11)特許出願公開番号
特開2000－281144
（P2000－281144A）
(43)公開日　平成12年10月10日(2000.10.10)

(51)Int.Cl.⁷	識別記号	ＦＩ	テーマコード（参考）
Ｂ６５Ｄ　81/26		Ｂ６５Ｄ　81/26	Ｋ　３Ｅ０６７
Ａ６１Ｍ　25/00	４６０	Ａ６１Ｍ　25/00　４６０	

審査請求　未請求　請求項の数15　ＯＬ　（全 20 頁）

(21)出願番号　特願平11－84854

(22)出願日　平成11年３月26日(1999.3.26)

(71)出願人　000109543
テルモ株式会社
東京都渋谷区幡ヶ谷２丁目44番１号

(72)発明者　志村　賢一
神奈川県足柄上郡中井町井ノ口1500番地
テルモ株式会社内

(72)発明者　中川　雄司
神奈川県足柄上郡中井町井ノ口1500番地
テルモ株式会社内

(74)代理人　100091292
弁理士　増田　達哉

最終頁に続く

(54)【発明の名称】　包装体

(57)【要約】
【課題】簡便にかつ無菌的に器具と液体との接触を可能にし、器具の使用後、外部への臭気の放散や、汚染、感染等を防止することができる包装体を提供すること。
【解決手段】包装体１の包材２は、シート材と融着して得られたものであり、その内部には、仕切部２２で区画された第１の空間４と第２の空間５とが形成されている。仕切部２２には、弱シール部２３が形成されている。第１の空間４内には、カテーテル７と、通気性を有する容器８１に入れられた脱臭剤８とが収納されている。また、第２の空間５には、流動性物質１０が収納されている。弱シール部２３が剥離され、流動性物質１０が第１の空間４内に流入し、カテーテル７と接触すると、カテーテル７の表面は、湿潤して摩擦抵抗が低減する。

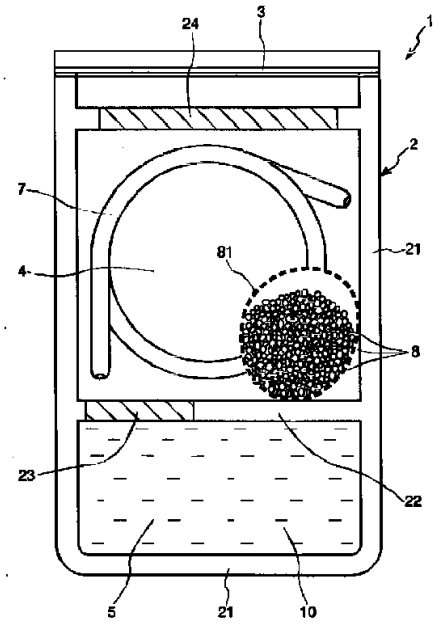

【特許請求の範囲】

【請求項１】　仕切部により互いに隔離され、必要時に連通可能な第１の空間および第２の空間を有する包材と、
前記第１の空間に収納され、生体に挿入または装着して使用される器具と、
前記第１の空間に収納され、臭気を消滅または低減させる物質と、
前記第２の空間に収納され、前記器具の表面と接触してその摩擦抵抗を低減させることができる流動性物質とを備えることを特徴とする包装体。

【請求項２】　前記臭気を消滅または低減させる物質の主成分が酸化チタンである請求項１に記載の包装体。

【請求項３】　仕切部により互いに隔離され、必要時に連通可能な第１の空間および第２の空間を有する包材と、
前記第１の空間に収納され、生体に挿入または装着して使用される器具と、
前記第１の空間に収納され、少なくとも微生物の増殖を抑制する機能を有する物質と、
前記第２の空間に収納され、前記器具の表面と接触してその摩擦抵抗を低減させることができる流動性物質とを備えることを特徴とする包装体。

【請求項４】　前記微生物の増殖を抑制する機能を有する物質の主成分が酸化チタンである請求項３に記載の包装体。

【請求項５】　仕切部により互いに隔離され、必要時に連通可能な第１の空間、第２の空間および第３の空間を有する包材と、
前記第１の空間に収納され、生体に挿入または装着して使用される器具と、
前記第２の空間に収納され、前記器具の表面と接触してその摩擦抵抗を低減させることができる流動性物質と、
前記第３の空間に収納され、液体を吸収、保持し得る物質とを備えることを特徴とする包装体。

【請求項６】　仕切部により互いに隔離され、必要時に連通可能な第１の空間、第２の空間および第３の空間を有する包材と、
前記第１の空間に収納され、生体に挿入または装着して使用される器具と、
前記第２の空間に収納された血液抗凝固剤と、
前記第３の空間に収納され、液体を吸収、保持し得る物質とを備えることを特徴とする包装体。

【請求項７】　前記第１の空間と前記第２の空間とが隣接して形成され、かつ、前記第１の空間と前記第３の空間とが隣接して形成されている請求項５または６に記載の包装体。

【請求項８】　前記第２の空間は、前記第１の空間の内側に形成されている請求項１ないし７のいずれかに記載の包装体。

【請求項９】　前記仕切部は、前記包材を構成するシート材を融着してなるシール部で構成されている請求項１ないし８のいずれかに記載の包装体。

【請求項１０】　前記仕切部の少なくとも一部が、他の部分より接合強度が弱い弱シール部で構成されている請求項１ないし９のいずれかに記載の包装体。

【請求項１１】　前記第１の空間から前記器具を取り出すための開封部と、該開封部を開封後、その開封口を封止する封止手段とを有する請求項１ないし１０のいずれかに記載の包装体。

【請求項１２】　前記包材は、水蒸気バリヤー性を有するものである請求項１ないし１１のいずれかに記載の包装体。

【請求項１３】　前記器具は、カテーテルまたはガイドワイヤーである請求項１ないし１２のいずれかに記載の包装体。

【請求項１４】　前記器具は、尿道に挿入して使用されるカテーテルである請求項１ないし１２のいずれかに記載の包装体。

【請求項１５】　前記器具の少なくとも一部の表面に、湿潤により潤滑性が発現する化合物が付与されている請求項１ないし１４のいずれかに記載の包装体。

【発明の詳細な説明】

【０００１】

【発明の属する技術分野】本発明は、例えばカテーテルのような器具を包装した包装体に関する。

【０００２】

【従来の技術】気管、消化管、尿道、血管、その他の体腔や、各種臓器、生体組織等へ挿入されるカテーテル、該カテーテルに挿入されるガイドワイヤー等の医療用器具の表面は、一般に、血栓、組織接着または異物反応が数多く確認される。従って、生体組織への損傷を低減し、目的部位へ確実に挿入することが必要となる。また、生体組織内での留置の際の粘膜炎症や粘膜損傷を抑制するために、器具表面に潤滑性を持たせることが必要とされる。

【０００３】このため、低摩擦材料を基材として用いたり、使用に先立ち、器具表面に水、生理等張液もしくは潤滑剤を塗布したりしている。より詳しく説明すると、カテーテルの基材を多層積層構造とし、その最外層（または最内層）に、フッ素樹脂やポリエチレン樹脂等の低摩擦素材を用いたり、器具表面に水、生理等張液、グリセリン、オイル等の潤滑剤を塗布したりしている。

【０００４】しかしながら、カテーテル基材の材質の選択では、摺動性の向上に限界があり、満足できるレベルに到達することが困難である。

【０００５】また、潤滑剤等を付与する場合、これらを医療用器具と接触させた状態で製品化を行おうとすれば、医療用器具が使用されるまでの長時間の間に、潤滑剤の変質、劣化や、医療用器具表面からの剥離等が懸念

され、安定性（保存性）およびこれに伴う安全性の面で課題があった。

【０００６】さらに、使用時に医療用器具と潤滑剤とを無菌的に接触させることは非常に困難であり、細菌感染等のおそれがあるという問題もある。

【０００７】また、緊急時には、患者の生命を維持することが最優先であるため、潤滑剤の塗布の作業が煩わしいものとなり、場合によっては、潤滑剤を塗布せず、表面が乾燥状態のままで使用されることがある。

【０００８】医療用器具の表面に湿潤すると潤滑性を発現する化合物を存在させる方法として、国際出願ＷＯ９００１３４４には、ポリウレタン表面にコーティング操作により、アルカリ金属アルコラート、アミノ基、アルカリ金属アミド基、カルボン酸基、スルホン酸基、マグネシウムハライド基およびフッ素ホウ素系錯体基の少なくとも一つを導入し、さらにコーティング操作により、これら官能基と反応しうる親水性ポリマーを表面に固定化する技術が開示されている。

【０００９】また、同様に、医療用器具の表面に湿潤すると潤滑性を発現する化合物を存在させる方法は、特公平６－３２６５２号、特開平６－７４２６号、国際出願ＷＯ９２１９２８９、特表平１０－５０２８５４号、特表平１０－５０２８５５号、特表平１０－５０２８５６号等にも開示されている。

【００１０】しかしながら、これらの方法では、乾燥では潤滑性を発現することはなく、使用時には、医療用器具を包材から取り出し、その医療用器具の表面に水、生理等張液等の液体を供給し、接触させる操作が必須である。しかも、この操作を無菌的に行うことは、特別な操作や施設を利用する場合を除き、非常に困難であった。そのため、前述したように、感染のおそれを免れず、また、緊急時に、表面が乾燥状態のまま、直接、気管、消化管、尿道、血管等へ挿入することもあり、粘膜等の損傷が懸念されるものであった。

【００１１】一方、血液が血管内皮細胞以外の異物と接触すると、異物表面に血漿タンパク、血小板の粘着、血液凝固が惹起され、血栓が生成される。この血栓形成は、カテーテル、ガイドワイヤー等の医療用器具の使用時において問題となる。

【００１２】そのため、血液中にヘパリン等の血液抗凝固剤を投与するか、あるいは医療用器具の表面に血液抗凝固剤等を付与したり基材として抗血栓性材料を用いたりすることが行われている。

【００１３】しかしながら、前者の場合には、患者に出血傾向等の弊害をもたらし、また、後者の場合には、使用時に液体との接触操作が必要であり、この操作を無菌的に行うことは、非常に困難であるという点で、前記と同様である。

【００１４】さらに、緊急時には、患者の生命を維持することが最優先であるため、抗凝固操作を行わずに直接使用することもあり、血栓形成による弊害が懸念されるものであった。

【００１５】また、これら医療用器具の使用後は、医療廃棄物として廃棄処理されるが、通常は、体液や血液中の細菌、ウイルスなどの不活化操作（消毒・殺菌操作）や脱臭操作を施さずに、感染性を有したまま、あるいは臭気の放出を許容したままの状態で廃棄されていた。

【００１６】そのため、医療用器具の使用後、焼却処分されるまでの間に、臭気が放散されたり、尿や血液等の体液が漏れ出し、周囲の汚染や感染を生じることがあった。

【００１７】

【発明が解決しようとする課題】本発明は、上述した問題点に鑑みてなされたもので、その目的は、簡便にかつ無菌的に器具と液体との接触を可能にし、また、器具の使用後、外部への臭気の放散や、汚染、感染等を防止することができる包装体を提供することにある。

【００１８】

【課題を解決するための手段】このような目的は、下記（１）～（１５）の本発明により達成される。

【００１９】（１）　仕切部により互いに隔離され、必要時に連通可能な第１の空間および第２の空間を有する包材と、前記第１の空間に収納され、生体に挿入または装着して使用される器具と、前記第１の空間に収納され、臭気を消滅または低減させる物質と、前記第２の空間に収納され、前記器具の表面と接触してその摩擦抵抗を低減させることができる流動性物質とを備えることを特徴とする包装体。

【００２０】（２）　前記臭気を消滅または低減させる物質の主成分が酸化チタンである上記（１）に記載の包装体。

【００２１】（３）　仕切部により互いに隔離され、必要時に連通可能な第１の空間および第２の空間を有する包材と、前記第１の空間に収納され、生体に挿入または装着して使用される器具と、前記第１の空間に収納され、少なくとも微生物の増殖を抑制する機能を有する物質と、前記第２の空間に収納され、前記器具の表面と接触してその摩擦抵抗を低減させることができる流動性物質とを備えることを特徴とする包装体。

【００２２】（４）　前記微生物の増殖を抑制する機能を有する物質の主成分が酸化チタンである上記（３）に記載の包装体。

【００２３】（５）　仕切部により互いに隔離され、必要時に連通可能な第１の空間、第２の空間および第３の空間を有する包材と、前記第１の空間に収納され、生体に挿入または装着して使用される器具と、前記第２の空間に収納され、前記器具の表面と接触してその摩擦抵抗を低減させることができる流動性物質と、前記第３の空間に収納され、液体を吸収、保持し得る物質とを備えることを特徴とする包装体。

【0024】(6)　仕切部により互いに隔離され、必要時に連通可能な第1の空間、第2の空間および第3の空間を有する包材と、前記第1の空間に収納され、生体に挿入または装着して使用される器具と、前記第2の空間に収納された血液抗凝固剤と、前記第3の空間に収納され、液体を吸収、保持し得る物質とを備えることを特徴とする包装体。

【0025】(7)　前記第1の空間と前記第2の空間とが隣接して形成され、かつ、前記第1の空間と前記第3の空間とが隣接して形成されている上記(5)または(6)に記載の包装体。

【0026】(8)　前記第2の空間は、前記第1の空間の内側に形成されている上記(1)ないし(7)のいずれかに記載の包装体。

【0027】(9)　前記仕切部は、前記包材を構成するシート材を融着してなるシール部で構成されている上記(1)ないし(8)のいずれかに記載の包装体。

【0028】(10)　前記仕切部の少なくとも一部が、他の部分より接合強度が弱い弱シール部で構成されている上記(1)ないし(9)のいずれかに記載の包装体。

【0029】(11)　前記第1の空間から前記器具を取り出すための開封部と、該開封部を開封後、その開封口を封止する封止手段とを有する上記(1)ないし(10)のいずれかに記載の包装体。

【0030】(12)　前記包材は、水蒸気バリヤー性を有するものである上記(1)ないし(11)のいずれかに記載の包装体。

【0031】(13)　前記器具は、カテーテルまたはガイドワイヤーである上記(1)ないし(12)のいずれかに記載の包装体。

【0032】(14)　前記器具は、尿道に挿入して使用されるカテーテルである上記(1)ないし(12)のいずれかに記載の包装体。

【0033】(15)　前記器具の少なくとも一部の表面に、湿潤により潤滑性が発現する化合物が付与されている上記(1)ないし(14)のいずれかに記載の包装体。

【0034】

【発明の実施の形態】以下、本発明の包装体を添付図面に示す好適実施例に基づいて詳細に説明する。

【0035】図1は、本発明の包装体の第1実施例を示す平面図(内部透視図)である。同図に示すように、包装体1は、第1の空間および第2の空間を有する包材2を有している。

【0036】包材2は、後述するようなシート材を融着(または接着)により所望のパターンにシールして袋状としたものである。包材2の外周部等には、帯状のシール部21が形成されている。

【0037】また、包材2の途中には、仕切部22が形成されている。この仕切部22は、前記シール部21と同様にシート材を帯状に融着(または接着)したものである。この仕切部22により、包材2内は、それぞれ独立した(互いに隔離された)第1の空間4および第2の空間5に区画されている。

【0038】図1中斜線を施して示すように、仕切部22の一部は、他の部分(シール部21)より接合強度(剥離強度)が弱い弱シール部(イージーピールシール部)23で構成されている。この弱シール部23を剥離(破断)することにより、第1の空間4と第2の空間5とが連通する。

【0039】シール部21は、対向するシート材同士が完全に融着され、強固な接合状態であるのに対し、弱シール部23は、それより低温で融着する等により、対向するシート材同士の融着がある程度不完全であるような状態とされる。ただし、弱シール部23においても、液密性(気密性)は、確保されている。そして、その効果は、経時的に持続する。

【0040】弱シール部23を剥離(破断)するには、包材2の第2の空間5を画成する部分を押圧(圧迫)し、第2の空間5の内圧を高めることにより可能となる。また、その他、弱シール部23を手で揉みほぐしてもよく、さらには、これらの方法を併用してもよい。このように、極めて簡単な操作で、第1の空間4と第2の空間5とを連通させることができる。

【0041】なお、弱シール部23は、仕切部22の2箇所以上に形成されていてもよく、あるいは、仕切部22のほぼ全体にわたって形成されていてもよい。

【0042】また、包材2の図1中上端部のシール部21にも、前記弱シール部23と同様の弱シール部(開封部)24が形成されている。この弱シール部24を剥離(破断)して包材2を開封し、第1の空間4内の収納物を出し入れすることができる。

【0043】また、弱シール部24の図1中上端側の近傍には、開閉可能なジッパー(封止手段)3が設けられている。弱シール部24を剥離(破断)して包材2を開封した後でも、このジッパー3を閉じることにより、この開封口を封止することができる。また、ジッパー3を開ければ、再び開封口を開放することができる。

【0044】なお、ジッパー3としては、例えば、互いに嵌合する溝および突条で構成されたもの等、公知の任意の構成のものが使用可能である。

【0045】第1の空間4には、生体に挿入または装着して使用される器具と、臭気を消滅または低減させる物質とが収納されている。生体に挿入または装着して使用される器具としては、カテーテルまたはガイドワイヤーが好ましく、本実施例では、第1の空間4内に、カテーテル7と脱臭剤(消臭剤)8とが収納されている。

【0046】カテーテル7としては、例えば、気管、消化管、尿道、膣、血管、リンパ管、胆管、その他の体腔

や、例えば肺、心臓、腎臓等の各種臓器、その他の生体組織等へ挿入される種々のカテーテル、バルーンカテーテルが挙げられるが、特に、尿道に挿入して使用されるカテーテル（尿道カテーテル、導尿カテーテル）が好ましい。

【００４７】排尿障害における導尿法は、留置カテーテルではなく無菌間歇導尿法が好ましいが、近年、患者自身がカテーテルを使って尿を排出する自己導尿が有効な治療方法として普及してきている。排尿障害は、前立腺肥大症、結石、腫瘍などによる尿道閉塞や、脳・脊髄および骨盤神経などの障害により見られる神経因性膀胱によって起こるが、尿を完全に出しきれない状態になると、尿路内圧が上がって腎臓に負担をかけるので、定期的に尿を排出する必要がある。この際に行われる自己導尿法は、低圧で完全に尿を排出できるので、既にある尿感染が低減する、頻尿、尿失禁が治る、膀胱と腎臓に負担をかけない等の利点があり、患者自身が１日４〜６回程度、尿道から膀胱内にカテーテルを挿入し、尿の排出が終了したら抜去する。その頻度は、例えば、昼間は４〜５時間毎、夜間は就寝前とされる。

【００４８】カテーテル７の表面には、例えば、湿潤により潤滑性を発現する物質が付与されているのが好ましい。このような物質としては、例えば、特開昭６０−２５９２６９、特開平１−１９５８６３号公報に記載されているような親水性ポリマーが挙げられる。また、例えば、特公平６−３２６５２号、特開平６−７４２６号、国際出願ＷＯ８８０２６２３、国際出願ＷＯ８９０７５２１、国際出願ＷＯ８９０９２４６、国際出願ＷＯ９００１３４４、国際出願ＷＯ９２１９２８９、国際出願ＷＯ９３１１７５１、国際出願ＷＯ９５２９７２２、特表平１０−５０２８５４号、特表平１０−５０２８５５号、特表平１０−５０２８５６号に開示されている物質や方法を用いてもよい。このような物質は、カテーテル７の表面に、湿潤していない状態（乾燥状態）で存在している。

【００４９】このような物質は、カテーテル７の基材表面に化学結合されたポリマーであって、カテーテル７の基材表面からの剥離は、水、生理等張液、その他潤滑剤等への溶出が生じ難いものが、潤滑性の持続性、安全性の点から好ましい。

【００５０】脱臭剤（消臭剤）８は、市販されている脱臭剤、消臭剤、芳香剤等、いずれのものを使用してもよい。この場合、脱臭剤８の臭気除去機構においても、物理的消臭法（活性炭、ゼオライト等の多孔性物質）、化学的消臭法（各種有機・無機化合物、植物抽出物、オゾン、貴金属系酸化触媒）、生物学的消臭法（微生物、人工酵素）、感覚的消臭法（芳香系化合物、植物製油）等、第１の空間４に収納可能であればいかなるものでもよい。

【００５１】脱臭剤８として特に好ましいものとしては、酸化チタン（TiO_2）が挙げられる。この酸化チタンは、次のような利点を有する。

【００５２】１）無害な無機酸化物であり、環境との調和が可能である。

２）紫外光励起の結果、強力な酸化力を有し、吸着した有機物の常温分解が可能である。

３）吸着した酸素を酸素ラジカルに変化させ、このラジカルにより吸着した有機物の常温分解が可能である。

４）上記２）３）の効果が、日常の生活空間の照明光で惹起される。

【００５３】このような酸化チタンの持つ優れた機能により、脱臭効果のみならず、抗菌、抗カビ効果も得られる。このような酸化チタンは、好ましくは、紙、不織布などの有機合成繊維や、パルプなどの有機化合物から構成される繊維の基材に担持させたものが好ましい。

【００５４】このような脱臭剤８は、通気性を有する容器（包材）８１に収納された状態とされている。この容器８１は、気体は透過するが液体は透過できないような材料で構成されているのが好ましい。このような容器８１の構成材料としては、例えば、ポリエチレン製不織布、ポリテトラフルオロエチレン製多孔質体のような水不透過性多孔質体が挙げられる。

【００５５】第２の空間５には、前記カテーテル７の表面と接触してその摩擦抵抗を低減させることができる流動性物質（液状または半液状物）１０が収納（充填）されている。

【００５６】この流動性物質１０の例としては、水、生理等張液（生理食塩水）、グリセリン、シリコーンオイル、オリーブオイル等のオイル類、キシロカインゼリー等（以下、これらを総称して「潤滑剤」と言う）が挙げられる。

【００５７】カテーテル７の表面に前述したような湿潤により潤滑性を発現する物質が付与されている場合、流動性物質１０は、この物質を湿潤させることができるものであればいかなるものでもよく、その典型例としては、水、生理等張液（生理食塩水）、グリセリン水溶液等が選択される。

【００５８】包材２（好ましくは包材２全体）は、水蒸気バリヤー性を有するのが好ましい。ここで、水蒸気バリヤー性とは、水蒸気透過度が、好ましくは３０ｇ／m^2・２４ｈｒｓ・２５μｍ厚・４０℃・９０％RH以下、より好ましくは１０ｇ／m^2・２４ｈｒｓ・２５μｍ厚・４０℃・９０％RH以下、さらに好ましくは１ｇ／m^2・２４ｈｒｓ・２５μｍ厚・４０℃・９０％RH以下であることを言う。この水蒸気透過度は、ＪＩＳＫ７１２９（Ａ法）に記載の方法により測定される。

【００５９】このように包材２が水蒸気バリヤー性を有することにより、包材２の内部、特に第２の空間５からの水分の蒸散が防止できる。その結果、第２の空間５内の液剤（流動性物質１０等）の減少、濃縮を防止するこ

とができるとともに、該液剤の量が必要最少限の量で済み、包装体１全体の容積や重量を小さくすることができる。また、包材２の外部や第２の空間５からの第１の空間４内への水蒸気の侵入も防止することができる。

【００６０】包材２を構成するシート材（フィルム）、特に前記水蒸気バリヤー性を有するシート材としては、例えば、ポリエチレン、ポリプロピレン等のポリオレフィン樹脂、これらポリオレフィン樹脂のブレンド樹脂、ポリエチレンテレフタレート等のポリエステル樹脂、ポリ塩化ビニリデン、塩化ビニル－塩化ビニリデン共重合体等の単層フィルム、これらのフィルムにアルミニウム、シリカ等を蒸着したもの、アルミニウムフィルム、アルミニウムラミネートフィルム等の金属箔または金属箔を含むフィルムを使用することができる。さらには、これら各フィルムを２層以上積層したものを用いることもできる。

【００６１】なお、弱シール部２３、２４においては、直接融着に関与する層（シーラント層）が２種以上の互いに相溶しないポリオレフィン樹脂のブレンド樹脂、もしくは２種以上の互いに相溶しないポリオレフィンをセグメントに有するランダムもしくはブロック共重合体で構成されていることが好ましい。

【００６２】本発明では、包材２全体または包材２の少なくとも第２の空間５を画成する部分が、水蒸気バリヤー性を有するシート材で構成されているのが好ましい。このようなシート材は、例えば、［１］１種のポリオレフィン樹脂で構成される単層フィルム、［２］２種以上の互いに相溶しないポリオレフィン樹脂のブレンド樹脂より構成される単層フィルム、［３］シーラント層（融着に関与する層）にポリオレフィン樹脂（ポリオレフィン樹脂のブレンド樹脂も使用可能）を用いたポリオレフィン樹脂もしくはポリエステル樹脂の多層フィルム、等が挙げられる。

【００６３】より高い水蒸気バリヤー性を得るには、例えば、［４］シーラント層がポリオレフィン樹脂（ポリオレフィン樹脂のブレンド樹脂も使用可能）より構成されるフィルム、外層がポリ塩化ビニリデンをコーティングしたポリオレフィンまたはポリエステルフィルム等で構成される多層フィルム、［５］シーラント層がポリオレフィン樹脂（ポリオレフィン樹脂のブレンド樹脂も使用可能）より構成されるフィルム、外層がアルミ蒸着もしくはシリカ蒸着されたポリオレフィンフィルムまたはポリエステルフィルム等で構成される多層フィルム、が挙げられる。

【００６４】さらに、極めて高い水蒸気バリヤー性を得るには、例えば、［６］シーラント層がポリオレフィン樹脂（ポリオレフィン樹脂のブレンド樹脂も使用可能）より構成されるフィルム、中間層がアルミニウムフィルム、最外層がポリエステルフィルム等で構成される多層フィルム、が挙げられる。この場合、対向する一対のシート材のうちの一方を不透明なアルミニウムフィルム、他方をシリカ蒸着フィルム等の透明な水蒸気バリヤー性フィルムとすれば、包材２の内容物の視認による確認が行えるので、さらに好ましい。なお、アルミニウムフィルムは、必要に応じその一部もしくは全部が剥離除去可能であってもよい。

【００６５】包材２を構成するシート材（単層または多層積層体）の厚さは、その層構成や用いる素材の特性（柔軟性、強度、水蒸気透過性、耐熱性等）等に応じて適宜決定され、特に限定されるものではないが、通常は、６０～７００μｍ程度であるのが好ましく、１００～５００μｍ程度であるのがより好ましい。

【００６６】このような包材２を構成するシート材は、例えば、インフレーション法、Ｔダイ法、ブロー成型法、ドライラミネート法、ホットメルトラミネート法、共押出インフレーション法、共押出Ｔダイ法、ホットプレス法等の種々の方法により製造することができる。

【００６７】次に、本発明の包装体の第２実施例について、前記第１実施例との相違点を中心に説明し、同様の事項の説明は省略する。

【００６８】第２実施例の包装体は、図１に示す包装体１において、脱臭剤８に代え、少なくとも微生物（細菌、ウイルス等）の増殖（繁殖）を抑制する機能を有する物質を収納したものである。この物質の代表的なものとしては、抗菌剤が挙げられ、以下、この抗菌剤で代表的に説明する。ここで、抗菌剤とは、殺菌、消毒、除菌、抗菌または制菌作用を有する物質の総称を言う。

【００６９】抗菌剤としては、有機系抗菌剤、無機系抗菌剤のいずれでもよいが、耐性菌の出現の防止等、安全性をより重視するという点では、例えば、金属、金属酸化物、各種セラミックス等の無機系抗菌剤が好ましい。

【００７０】また、抗菌剤は、その作用機序から、細胞壁合成阻害、細胞膜障害、蛋白合成阻害、ＤＮＡ合成障害、細胞内代謝障害等に分類できるが、本発明では、いかなる作用機序のものでもよい。

【００７１】このような抗菌剤の特に好ましいものとしては、前述した酸化チタン（TiO_2）が挙げられる。この酸化チタンについては、前述した通りである。

【００７２】また、抗菌剤は、例えば、織布、メッシュ（網状体）等で構成された通気性および通液性を有する容器（包材）、あるいは前述した容器（包材）８１に収納された状態で、第１の空間４内に収納されているのが好ましい。

【００７３】図２は、本発明の包装体の第３実施例を示す平面図（内部透視図）である。以下、第３実施例の包装体について、前記第１実施例との相違点を中心に説明し、同様の事項の説明は省略する。

【００７４】図２に示すように、第３実施例の包装体１は、包材２の第１の空間４内に抗菌剤（少なくとも微生物の増殖を抑制する機能を有する物質）として、シート

状の抗菌剤、すなわち、抗菌シート９を収納したものである。

【００７５】抗菌シート９としては、例えば、シート、多孔質体等の基材に、有機系抗菌剤、銀、銅、亜鉛などの抗菌活性を有する金属、セラミックス等の抗菌剤を担持させたものが挙げられる。特に、耐性菌の出現の懸念の少ない無機系抗菌剤が好ましい。

【００７６】なお、図示の構成では、抗菌シート９は、第１の空間４の一部分に配置されているが、第１の空間４のほぼ全域をカバーするような大きさの抗菌シートを用いることもできる。また、抗菌シート９は、複数枚収納されていてもよい。

【００７７】第２および第３実施例のように、第１の空間４内に抗菌剤を収納したことにより、包材２の開封前または開封後のカテーテル７は勿論のこと、使用済みのカテーテル７を第１の空間４内へ戻した際にも、カテーテル７に対し抗菌作用を発揮することができ、廃棄までの間の運搬や廃棄処理を衛生的で安全に行うことができる。

【００７８】図３は、本発明の包装体の第４実施例を示す平面図（内部透視図）である。以下、第４実施例の包装体について、前記第１実施例との相違点を中心に説明し、同様の事項の説明は省略する。

【００７９】図３に示すように、第４実施例の包装体１は、第２の空間５が第１の空間４の内側に形成されているものである。すなわち、包材２は、第１の空間４を有し、その中には、前述したカテーテル７と、脱臭剤８（または抗菌剤）と、小包材（袋体）１１とが収納されている。

【００８０】小包材１１は、前述した包材２を構成するシート材と同様のシート材を重ね、その外周部を融着（または接着）によりシールして袋状としたものであり、その内部には、第２の空間５が形成される。この第２の空間５には、前述した流動性物質１０が収納（充填）されている。

【００８１】小包材１１の外周のシール部は、第２の空間５と第１の空間４とを区画する仕切部２２を構成する。この仕切部２２の一部には、前記と同様の弱シール部２３が形成されている。この弱シール部２３を剥離（破断）することにより、第１の空間４と第２の空間５とが連通し、流動性物質１０を第１の空間４へ流入させることができる。

【００８２】このような構成の包装体１は、次のような効果（利点）を有する。まず第１に、第１の空間４内に入れる小包材１１の容量を選択することにより、小包材１１の内容物（流動性物質１０等）の量や重量を容易に設定することができる。第２に、小包材１１が第１の空間４内で移動可能であるため、弱シール部２３を剥離（破断）する操作や、その後小包材１１内から流動性物質１０等をしごき出す操作を容易に行うことができる。第３に、２重包装であるため、流動性物質１０の容器である小包材１１には、要求される水蒸気バリヤー性のレベルが前記第１～第３実施例に比べて低くてよく、よって、小包材１１の構成材料の選択の自由度が広がり、また、シート厚をより薄くできる等、製造上有利となる。第４に、小包材１１は単独で製造可能なので、製造・管理がしやすい。

【００８３】なお、第４実施例の包装体１の場合、小包材１１のみが、水蒸気バリヤー性を有するものであってもよい。

【００８４】次に、上述した各包装体１の使用方法（作用）について説明する。

【００８５】例えば前述したような方法により弱シール部２３を剥離（破断）すると、第１の空間４と第２の空間５とが連通し、第２の空間５内に収納されていた流動性物質１０が第１の空間４内に流入し、カテーテル７の表面に接触する。これにより、カテーテル７の表面に潤滑性が発現し、摩擦抵抗が低減する。なお、弱シール部２３を剥離（破断）後、必要に応じ、包材２の外部から手で押圧（圧迫）する等して、第２の空間５から流動性物質１０等をしごき出す操作を行ってもよい。

【００８６】第１の空間４および第２の空間５は、予め滅菌処理がなされており、しかも、このようなカテーテル７の表面に潤滑性を発現させる操作は、密閉された包材２の内部で外気と接触することなく行われるため、カテーテル７は、無菌性を保持することができる。

【００８７】なお、第１の空間４に流入した流動性物質１０は、容器８１を透過することはできないので、容器８１内の脱臭剤８は、流動性物質１０で濡れることはなく、よって、脱臭機能（消臭機能）の低下を生じることが防止される。

【００８８】従来では、細菌感染を防ぐために、カテーテルを生体内に挿入する前に、そのカテーテルを例えば１％ポビドンヨードグリセリン液のような消毒液に浸漬し、消毒する操作を行っていた。しかし、消毒液の調整が非常に煩雑なことや、消毒液の入手自体が困難な場合も多々あり、患者自身への負担が大きく、安全性の確保が十分ではなかった。また、同一のカテーテルに対し、消毒を繰り返し行って複数回使用すると、カテーテル表面へのバイオフィルムの形成等により細菌繁殖の温床になることもあった。これに対し、本発明では、前述したように、包材２を開封することなくカテーテル７を使用可能な状態（低摩擦状態）とすることができ、かつ、カテーテル７の無菌性を保持したままそのような状態とすることができるので、かかる従来の問題点が解消される。

【００８９】カテーテル７の表面に潤滑性を発現させる操作が終了したら、弱シール部２４を剥離（破断）し、ジッパー３を開いて、第１の空間４内のカテーテル７を取り出し、生体の目的部位に挿入または装着する。カテ

ーテル７が尿道カテーテル（導尿カテーテル）である場合には、そのカテーテル７を尿道および膀胱に挿入し、該カテーテル７を介して排尿する。このとき、カテーテル７の挿入は、カテーテル７の表面が潤滑性を有しているため、円滑かつ安全に行うことができる。排尿が終了したら、カテーテル７を尿道から抜き取る。

【００９０】使用済みのカテーテル７は、廃棄されるが、カテーテル７を単独で廃棄するのではなく、カテーテル７を再び包材２の第１の空間４内に戻し、ジッパー３を閉じ、包材２ごと廃棄するのが好ましい。

【００９１】特に、患者による自己導尿においては、外出時においてトイレの個室内でカテーテル７を使用した後、設置してあるゴミ箱にそれを捨てることは難しく、そのため、自宅に持ち帰り、廃棄することを希望する。また、帰宅途中（運搬移動中）において、使用したカテーテル７から発せられた尿臭気が外部へ漏れることは好ましくない。さらに、カテーテル７に残存する尿により、尿中の細菌、ウイルス等が繁殖することが懸念され、衛生的に好ましくない。

【００９２】本発明では、使用済みのカテーテル７を包材２の第１の空間４内に収納した際、脱臭剤８がカテーテル７から発せられる尿臭気等の臭気を消滅または減少させる。また、抗菌剤（酸化チタン、抗菌シート９等）が細菌、ウイルス等の増殖を抑制する。これにより、上記のような問題が解消され、使用済みのカテーテル７を臭気の放散を生じることなく、衛生的に搬送することができる。

【００９３】図４は、本発明の包装体の第５実施例を示す平面図（内部透視図）である。以下、第５実施例の包装体について、前記第１実施例等との相違点を中心に説明し、同様の事項の説明は省略する。

【００９４】図４に示すように、第５実施例の包装体１は、包材２内に、仕切部２５により仕切られた第１の空間４、第２の空間５および第３の空間６を有するものである。

【００９５】包材２の外周部等には、包材２を構成するシート材を融着（または接着）した帯状のシール部２１が形成されている。

【００９６】仕切部２５は、シール部２１と同様にシート材を帯状に融着（または接着）したものであり、Ｔ字状をなしている。この仕切部２５により、包材２内は、それぞれ独立した（互いに隔離された）第１の空間４、第２の空間５および第３の空間６に区画されている。

【００９７】この場合、第１の空間４、第２の空間５および第３の空間６は、互いに隣接して配置されている。従って、後述するような第２の空間５から第１の空間４への液体の移動、および第１の空間４から第３の空間６への移動等を迅速、確実に行うことができる。

【００９８】仕切部２２には、前記弱シール部２３と同様の弱シール部２６および２７が形成されている。弱シール部２６を剥離（破断）することにより、第１の空間４と第２の空間５とが連通し、弱シール部２７を剥離（破断）することにより、第１の空間４と第３の空間６とが連通する。

【００９９】第１の空間４内には、前述したカテーテル７が収納されており、第２の空間５には、前述した流動性物質１０が収納されている。

【０１００】第３の空間６には、液体を吸収、保持し得る物質として、吸水性材料１２が収納されている。この吸水性材料１２としては、例えば、ポリアクリル酸塩系、ポリビニルアルコール系、ポリアクリルアミド系、ポリオキシエチレン系またはマレイン酸系材料などの合成ポリマーや、デンプン、セルロース、アルギン酸のような多糖類材料などの天然材料などのような高分子吸水性材料が好ましい。また、その他、例えば、スポンジ、綿、ガーゼ、不織布や、それらに上記高分子吸水性材料を担持したもの（例えば、おむつ、生理用品などに用いられているもの）が挙げられる。これらの吸水性材料１２は、例えば、粉末状、フィルム状、シート状、繊維状（繊維の集合体）などの種々の形態をとることができる。

【０１０１】なお、第１の空間４または第３の空間６に、前述した脱臭剤および／または抗菌剤が収納されていてもよい。特に、第３の空間６にこれらを収納する場合、吸水性材料１２に、前述したような脱臭剤（脱臭機能を有する成分）および／または抗菌剤（抗菌機能を有する成分）が担持された構成とすることが好ましい。

【０１０２】図５は、本発明の包装体の第６実施例を示す平面図（内部透視図）である。以下、第６実施例の包装体について、前記第５実施例等との相違点を中心に説明し、同様の事項の説明は省略する。

【０１０３】図５に示すように、第６実施例の包装体１は、第１の空間４と第３の空間６とが弱シール部２７を有する仕切部２５により隔離され、第２の空間５が第１の空間４の内側に形成されているものである。すなわち、包材２の第１の空間４内には、前述したカテーテル７と、前記と同様の小包材（袋体）１１とが収納されている。

【０１０４】小包材１１の外周部は、弱シール部２３を有する仕切部２２で構成され、その内側には、第２の空間５が形成されている。この第２の空間５には、前述した流動性物質１０が収納（充填）されている。弱シール部２３を剥離（破断）することにより、第１の空間４と第２の空間５とが連通し、流動性物質１０を第１の空間４へ流入させることができる。

【０１０５】また、第３の空間６内には、前記と同様の吸水性材料（液体を吸収、保持し得る物質）１２が収納されている。

【０１０６】このような構成の包装体１は、前記第４実施例の包装体１と同様の効果（利点）を有する。

【０１０７】図６は、本発明の包装体の第７実施例を示す平面図（内部透視図）である。以下、第７実施例の包装体について、前記第５実施例、第６実施例等との相違点を中心に説明し、同様の事項の説明は省略する。

【０１０８】図６に示すように、第７実施例の包装体１は、第２の空間５および第３の空間６がそれぞれ第１の空間４の内側に形成されているものである。すなわち、包材２の第１の空間４内には、前述したカテーテル７と、小包材（袋体）１４とが収納されている。

【０１０９】小包材１４は、前述した包材２を構成するシート材と同様のシート材を重ね、その外周部および途中を融着（または接着）によりシールして袋状としたものであり、その内部には、仕切部２８を介して第２の空間５と第３の空間６とが形成されている。

【０１１０】第２の空間５には、前述した流動性物質１０が収納（充填）され、第３の空間６には、前述した吸水性材料（液体を吸収、保持し得る物質）１２が収納されている。

【０１１１】小包材１４の外周部および途中を横断するシール部は、第１の空間４、第２の空間５および第３の空間６を隔離（区画）する仕切部２８を構成する。この仕切部２８の一部には、第２の空間５を開封するための弱シール部２６と、第３の空間６を開封するための弱シール部２７とが形成されている。なお、本実施例では、弱シール部２７は、２箇所に設けられている。

【０１１２】このような構成の包装体１は、次のような効果（利点）を有する。まず第１に、第１の空間４内に入れる小包材１４の容量（第２の空間５および第３の空間６のそれぞれの容量）を選択することにより、小包材１４の内容物（流動性物質１０および吸水性材料１２）の量や重量を容易に設定することができる。第２に、小包材１４が第１の空間４内で移動可能であるため、弱シール部２６、２７を剥離（破断）する操作や、第２の空間５から流動性物質１０等をしごき出す操作、第３の空間６へ液体を回収する操作を容易に（適正な位置で）行うことができる。また、前述した小包材１１の第３および第４の利点についても同様である。

【０１１３】なお、本実施例では、１つの小包材１４に第２の空間５および第３の空間６が形成されているが、これに限らず、第１の空間４内に２つの分離された小包材が収納され、それらの小包材にそれぞれ第２の空間５および第３の空間６が形成された構成であってもよい。この構成の場合にも、前記と同様の効果が得られる。

【０１１４】図７は、本発明の包装体の第８実施例を示す平面図（内部透視図）である。以下、第８実施例の包装体について、前記第５実施例等との相違点を中心に説明し、同様の事項の説明は省略する。

【０１１５】図７に示すように、第８実施例の包装体１は、その下端部側にU字状の第２の空間５を有し、該第２の空間５内には、前述した流動性物質１０が収納（充填）されている。

【０１１６】また、第２の空間５の内側（包材２の中心側）には、U字状の仕切部２９を介して第３の空間６が形成され、該第３の空間６内には、前述した吸水性材料（液体を吸収、保持し得る物質）１２が収納されている。

【０１１７】仕切部２５は、第１の空間４と第２の空間５、および第１の空間４と第３の空間６とをそれぞれ隔離している。この仕切部２５には、第３の空間６を開封するための弱シール部２７が形成されている。

【０１１８】仕切部２５の一方の側部には、破断して開封可能な封止部材１３が設置されている。この封止部材１３は、仕切部２５と交差するように仕切部２５に挟まれて融着されている。以下、封止部材１３の構成について説明する。

【０１１９】図８は、封止部材１３の構成例を示す縦断面図である。同図に示すように、封止部材１３は、例えば軟質ポリ塩化ビニルのような可撓性を有する樹脂により構成された短チューブ１３１と、この短チューブ１３１内に液密に嵌入され、中実柱状部１３３によりその一端が閉塞された筒体１３２とで構成されている。

【０１２０】短チューブ１３１の図８中上端部は、第１の空間４に連通し、筒体１３２の図８中下端部は、第２の空間５に連通している。

【０１２１】筒体１３２の途中の外周には、薄肉で脆弱な破断部１３４が形成されている。手指等により短チューブ１３１の外部から短チューブ１３１ごと中実柱状部１３３を折り曲げて破断部１３４を破断し、中実柱状部１３３を分離することにより、封止部材１３の内部流路が開通する。これにより、第１の空間４と第２の空間５とが連通し、第２の空間５内の流動性物質１０を第１の空間４へ流入させることができる。

【０１２２】筒体１３２の構成材料としては、例えば、硬質ポリ塩化ビニル、ポリカーボネート、ポリエステル等の硬質材料が挙げられる。

【０１２３】また、中実柱状部１３３の上端部１３５は、くさび形状（扁平形状）をなしている。これにより、中実柱状部１３３の破断分離後に中実柱状部１３３が短チューブ１３１を閉塞せず、十分な液流通を確保することができる。

【０１２４】また、短チューブ１３１の図８中上端部は、その内径が縮径しており、破断分離後の中実柱状部１３３がこの縮径部１３６を通過することができないようになっている。これにより、破断分離された中実柱状部１３３が第１の空間４内に入り、第１の空間４内で自由に移動することを防止することができる。

【０１２５】前記第５実施例、第６実施例、第７実施例および第８実施例においては、第２の空間５には流動性物質１０が収納されていたが、これらの各実施例において、流動性物質１０に代わり、第２の空間５内に血液抗

凝固剤（抗血栓剤）を含有する液体が収納されていてもよい。これにより、カテーテル7を使用するに際し、カテーテル7に血液抗凝固機能を付与することができる。血液抗凝固剤としては、例えば、下記表1に示すものが挙げられる。

【0126】

【表1】

表 1

ＡＣＤ液	クエン酸ナトリウム	2.2%
	クエン酸	0.8%
	ブドウ糖	2.2%
ＣＰＤ液	クエン酸ナトリウム	2.63%
	クエン酸	0.327%
	ブドウ糖	2.32%
	リン酸・１・ナトリウム	0.222%
ＣＰＤＡ－１液	クエン酸ナトリウム	2.63%
	クエン酸	0.327%
	ブドウ糖	2.9%
	リン酸・１・ナトリウム	0.222%
	アデニン	0.0275%
ヘパリン	塩化ナトリウム	0.9%
	ヘパリンナトリウム	1000単位/30ml

【0127】以上の各実施例では、包材２として、可撓性を有するシート材で構成されたものを挙げたが、これに限らず、例えば、一部が比較的硬質な材料で構成されたものでもよい。その具体例としては、いわゆるブリスター容器と呼ばれるものが挙げられる。このブリスター容器は、比較的硬質な材料で構成され、収納空間（例えば第１の空間）を形成する凹部を有する本体と、前記凹部の開口部を気密的に封止するフィルムとで構成され、該フィルムを剥がすことにより開封するものである。

【0128】次に、第５～第８実施例の各包装体１の使用方法（作用）について説明する。弱シール部２３または２６を剥離（破断）すると（第８実施例の場合には、封止部材１３の中実柱状部１３３を破断分離すると）、第１の空間４と第２の空間５とが連通し、第２の空間５内に収納されていた流動性物質１０が第１の空間４内に流入し、カテーテル７の表面に接触する。これにより、カテーテル７の表面に潤滑性が発現し、摩擦抵抗が低減する。なお、必要に応じ、包材２の外部から手で押圧（圧迫）する等して、第２の空間５から流動性物質１０等をしごき出す操作を行ってもよい。

【0129】第１の空間４および第２の空間５は、予め滅菌処理がなされており、しかも、このようなカテーテル７の表面に潤滑性を発現させる操作は、密閉された包材２の内部で外気と接触することなく行われるため、カテーテル７は、無菌性を保持することができる。このように、包材２を開封することなくカテーテル７を使用可能な状態（低摩擦状態）とすることができ、かつ、カテーテル７の無菌性を保持したままそのような状態とすることができるので、前述した従来の問題点が解消される。

【0130】カテーテル７の表面に潤滑性を発現させる操作が終了したら、弱シール部２４を剥離（破断）し、ジッパー３を開いて、第１の空間４内のカテーテル７を取り出し、生体の目的部位に挿入または装着する。カテ

ーテル7が尿道カテーテル（導尿カテーテル）である場合には、そのカテーテル7を尿道および膀胱に挿入し、該カテーテル7を介して排尿する。このとき、カテーテル7の挿入は、カテーテル7の表面が潤滑性を有しているため、円滑かつ安全に行うことができる。排尿が終了したら、カテーテル7を尿道から抜き取る。

【0131】使用済みのカテーテル7は、廃棄されるが、カテーテル7を単独で廃棄するのではなく、カテーテル7を再び包材2の第1の空間4内に戻し、ジッパー3を閉じ、包材2ごと廃棄するのが好ましい。

【0132】このとき、前述したような方法により、弱シール部27を剥離（破断）し、開封する。これにより、第1の空間4と第3の空間6とが連通し、カテーテル7の表面に付着し、またはカテーテル7内に残存している尿等の体液を、第3の空間6内に収納されている吸水性材料12で吸収し、保持することができる。その結果、尿等の体液の漏れ出しをより確実に防止することができ、使用済みのカテーテル7を包材2ごと衛生的に搬送し、廃棄することができる。

【0133】特に、吸水性材料12に、脱臭剤（脱臭機能を有する成分）および／または抗菌剤（抗菌機能を有する成分）が担持されている場合には、臭気の放散や細菌、ウイルス等の増殖を抑制し、より衛生的で安全に搬送、廃棄処理を行うことができる。

【0134】以上のように、本発明の包装体1によれば、簡便にかつ無菌的に潤滑剤、血液抗凝固剤等とカテーテルとの接触を可能にし、患者等による運搬、開封操作等も簡単であるばかりでなく、カテーテルの使用後も衛生的に安全に運搬し、廃棄することができる。

【0135】本発明において、第1の空間4に収納される器具としては、以下のようなものが挙げられる。

【0136】・　胃管カテーテル、栄養カテーテル、経管栄養用チューブ、酸素カテーテル、酸素カヌラ、気管内チューブのチューブやカフ、気管切開チューブのチューブやカフ、気管内吸引カテーテル等の経口または経鼻的に挿入、留置されるカテーテル類。

【0137】・　吸引カテーテル、排液カテーテル、腹腔カテーテル、直腸カテーテル、トロッカー等の各種体腔、臓器、組織内に挿入、留置されるカテーテル類。

【0138】・　血管造影用カテーテル、PTCA用バルーンカテーテル、IABP用バルーンカテーテル、静脈留置カテーテル、動注用カテーテル等の血管内に挿入、留置されるカテーテル類。

【0139】・　単独で、または、前記各カテーテル類とともに使用される各種ガイドワイヤー。

・　人工血管、ステント、人工肛門、人工骨、人工関節、補綴物、義眼。

・　注射針、留置針、シース、カテーテルイントロデューサ。

【0140】・　内視鏡、心拍出量測定器具、超音波測定・診断器具、超音波破砕プローブ、ペースメーカー、体温計。

・　縫合用または結さつ用の糸

・　浣腸

・　コンタクトレンズ

・　コンドーム等の避妊具

【0141】また、本発明において、第1の空間4、第2の空間5、第3の空間6の配置は、図示の各実施例のものに限らず、例えば、第2の空間、第1の空間および第3の空間が、この順に一列に配置された構成であってもよい。また、包材は、さらに第4の空間を有していてもよい。

【0142】また、第1の空間4、第2の空間5および第3の空間6には、それぞれ、前述した以外の任意のものが収納されていてもよい。

【0143】

【実施例】以下、実施例を挙げて本発明を具体的に説明する。

【0144】（実施例1A）ポリプロピレン（XF1800、チッソ（株）製）60重両部とスチレン系エラストマー（ハイブラHVS-3、クラレ（株）製）40重量部を用いて、共押出成形によるインフレーションシート（厚さ300μm、水蒸気透過度15g／m²・24hrs・25μm厚・40℃・90%RH）を得た。このシートを熱融着によりシールして、図1に示す構成の包材を成形した。

【0145】包材の第1の空間には、尿道に挿入して使用されるカテーテルとしてのネラトンカテーテル（サフィード、14Fr、テルモ（株）製）と、水不透過性多孔質体であるポリエチレン製不織布（商標名：タイベック、旭・デュポンフラッシュスパンプロダクツ（株）製）により包装された消臭・芳香剤（商標名：エアニップ、有限会社タクト製）とを入れた。なお、このネラトンカテーテルとしては、表面が、0.2wt%ポリビニルピロリドン－クロロホルム溶液（商標名：コリドンK30、BASFジャパン（株）製）でコーティングされ、親水性高分子材料の層が形成されているものを用いた。また、包材の第2の空間には、水10mlを入れ、密封した。

【0146】包材のシール部（弱シール部以外の部位）は、200℃、4秒、0.25kgf／cm²で、弱シール部は、105℃、4秒、0.25kgf／cm²でそれぞれヒートシールし、110℃、60分間高圧蒸気滅菌を行った。

【0147】滅菌後、この包装体を激しく振動させたが、弱シール部の剥離は観察されず、水とカテーテルとの接触はなかった。

【0148】次に、包材を手で押圧、圧迫し、弱シール部23に負荷をかけたところ、弱シール部23のみが剥離し、第2の空間内の水が第1の空間内へ流出し、カテ

ーテルと接触した。これにより、簡便にかつ無菌的に水とカテーテルとの接触が可能であることが確認された。

【0149】また、水とカテーテルとの接触後、弱シール部24を開封し、カテーテルを取り出して表面を擦って見たところ、表面が潤滑性を示し、摩擦抵抗が低減しており、体腔への挿入操作の操作性の向上が示唆された。

【0150】その後、カテーテルを下記表2に示す成分の人工尿に30秒間浸し、次いで、このカテーテルを包材の第1の空間に戻し、ジッパーを閉じて密封し、所定時間放置した。包材に顔を近づけたが、尿臭気を感じる等、不快な感じは確認されなかった。

【0151】よって、患者は、カテーテル使用後、そのカテーテルを簡便に、また、周辺に気兼ねすることなく自宅へ持ち帰ることが可能であり、精神的負担から開放されるばかりでなく、外気へ尿臭気が漏洩しないため、衛生上も好ましいことが示唆された。

【0152】

【表2】

表 2　人工尿の成分

化合物	含有量 (g/L)	化合物	含有量 (g/L)	化合物	含有量 (g/L)
$CaCl_2 \cdot 2H_2O$	0.65	$Na_2H_2C_6H_5O_7$	0.65	NH_4Cl	2.00
$MgCl_2 \cdot 6H_2O$	0.65	$(COONa)_2$	0.02	NH_2CONH_2	12.00
NaCl	4.60	KH_2PO_4	2.80	$C_4H_7N_3O$	1.10
Na_2SO_4	2.30	KCl	1.60	pH	5.7～5.8

【0153】(実施例2A、3A、4A) 実施例1Aと同様のインフレーションシートを熱融着によりシールして、図1に示す構造の包材を成形した。

【0154】包材の第1の空間には、前記と同様のネラトンカテーテル (表面のコーティングなし) を入れ、第2の空間には、下記表3に示す組成の潤滑剤を入れ、それぞれを密封した。また、第1の空間には、下記表3に示す水不透過性多孔質体で包装された消臭剤、芳香剤等を入れた。

【0155】

【表3】

表 3　第1、第2の空間の収納物

実施例	潤滑剤等	水不透過性多孔質体 (包装体)	消臭剤、芳香剤等
2A	グリセリン水溶液 (健栄製薬 (株) 製)	タイベック (旭・デュポンフラッシュスパンプロダクツ (株) 製)	エアニップ (有限会社タクト製)
3A	生理食塩水 (テルモ (株) 製)	ブレスロン (日東電工 (株) 製)	微香空間 (小林製薬 (株) 製)
4A	ミルトン液 (マックスファクター (株) 製)	ジュラガード (ポリプラスチックス (株) 製)	ピーターラビット消臭剤 (積水化学工業 (株) 製)

【0156】包材のシール部 (弱シール部以外の部位) は、200℃、4秒、0.25kgf/cm²で、弱シール部は、105℃、4秒、0.25kgf/cm²でそれぞれヒートシールし、110℃、60分間高圧蒸気滅菌を行った。

【0157】滅菌後、この包装体を激しく振動させたが、弱シール部の剥離は観察されず、第2の空間内の液体とカテーテルとの接触はなかった。

【0158】次に、包材を手で押圧、圧迫し、弱シール部23に負荷をかけたところ、弱シール部23のみが剥離し、第2の空間内の液体が第1の空間内へ流出し、カテーテルと接触した。これにより、簡便にかつ無菌的に液体とカテーテルとの接触が可能であることが確認された。

【0159】また、第2の空間内の液体とカテーテルとの接触後、弱シール部24を開封し、カテーテルを取り出して表面を擦って見たところ、カテーテルが乾燥状態のときと比較して、表面の摺動抵抗値が低減しており、体腔への挿入操作の操作性向上が示唆された。

【0160】その後、カテーテルを表2に示す成分の人

工尿に３０秒間浸し、次いで、このカテーテルを包材の第１の空間に戻し、ジッパーを閉じて密封し、所定時間放置した。包材に顔を近づけたが、尿臭気を感じる等、不快な感じは確認されなかった。

【０１６１】よって、患者は、カテーテル使用後、そのカテーテルを簡便に、また、周辺に気兼ねすることなく自宅へ持ち帰ることが可能であり、精神的負担から開放されるばかりでなく、外気へ尿臭気が漏洩しないため、衛生上も好ましいことが示唆された。

【０１６２】（実施例５Ａ、６Ａ）実施例１Ａと同様のインフレーションシートを熱融着によりシールして、図２に示す構造の包材を成形した。

【０１６３】包材の第１の空間には、前記と同様のネラトンカテーテル（表面のコーティングなし）を入れ、第２の空間には、下記表４に示す組成の潤滑剤を入れ、それぞれを密封した。また、第１の空間には、下記表４に示す抗菌シートを入れた。

【０１６４】

【表４】

表　４　　第１、第２空間の収納物

実施例	潤滑剤等	抗菌シート
５Ａ	グリセリン水溶液 （健栄製薬（株）製）	アバタッチ （旭光学工業（株）製）
６Ａ	ミルトン液 （マックスファクター（株）製）	お弁当用抗菌シート （リンテック（株）製）

【０１６５】包材のシール部（弱シール部以外の部位）は、２００℃、４秒、０．２５ｋｇｆ／ｃｍ^{2}で、弱シール部は、１０５℃、４秒、０．２５ｋｇｆ／ｃｍ^{2}でそれぞれヒートシールし、１１０℃、６０分間高圧蒸気滅菌を行った。

【０１６６】滅菌後、この包装体を激しく振動させたが、弱シール部の剥離は観察されず、第２の空間内の液体とカテーテルとの接触はなかった。

【０１６７】次に、包材を手で押圧、圧迫し、弱シール部２３に負荷をかけたところ、弱シール部２３のみが剥離し、第２の空間内の液体が第１の空間内へ流出し、カテーテルと接触した。これにより、簡便にかつ無菌的に液体とカテーテルとの接触が可能であることが確認された。

【０１６８】また、第２の空間内の液体とカテーテルとの接触後、弱シール部２４を開封し、カテーテルを取り出して表面を擦って見たところ、カテーテルが乾燥状態のときと比較して、表面の摺動抵抗値が低減しており、体腔への挿入操作の操作性向上が示唆された。

【０１６９】その後、カテーテルを表２に示す成分の人工尿に３０秒間浸し、次いで、このカテーテルを包材の第１の空間に戻し、ジッパーを閉じて密封し、所定時間放置した。包材に顔を近づけたが、尿臭気を感じる等、不快な感じは確認されなかった。さらに、抗菌シートの抗菌作用により、カテーテルに付着、残存している尿中の細菌、ウイルス等の増殖が抑制された。

【０１７０】よって、患者は、カテーテル使用後、そのカテーテルを簡便に、また、周辺に気兼ねすることなく自宅へ持ち帰ることが可能であり、精神的負担から開放されるばかりでなく、外気へ尿臭気が漏洩せず、細菌感染のおそれもないため、衛生上も好ましいことが示唆された。

【０１７１】（実施例７Ａ）実施例１Ａと同様のインフレーションシートを熱融着によりシールして、図２に示す構造の包材を成形した。

【０１７２】包材の第１の空間には、前記と同様のネラトンカテーテル（表面に実施例１Ａと同様のコーティングを施したもの）を入れ、第２の空間には、水１０ｍｌを入れ、それぞれを密封した。また、第１の空間には、酸化チタンを含む脱臭・抗菌シート（商標名：ＰＭ－ＩＮ－ＣＤ、三菱製紙（株）製）を入れた。

【０１７３】包材のシール部（弱シール部以外の部位）は、２００℃、４秒、０．２５ｋｇｆ／ｃｍ^{2}で、弱シール部は、１０５℃、４秒、０．２５ｋｇｆ／ｃｍ^{2}でそれぞれヒートシールし、１１０℃、６０分間高圧蒸気滅菌を行った。

【０１７４】滅菌後、この包装体を激しく振動させたが、弱シール部の剥離は観察されず、第２の空間内の液体とカテーテルとの接触はなかった。

【０１７５】次に、包材を手で押圧、圧迫し、弱シール部２３に負荷をかけたところ、弱シール部２３のみが剥離し、第２の空間内の水が第１の空間内へ流出し、カテーテルと接触した。これにより、簡便にかつ無菌的に水とカテーテルとの接触が可能であることが確認された。

【０１７６】また、第２の空間内の水とカテーテルとの接触後、弱シール部２４を開封し、カテーテルを取り出して表面を擦って見たところ、カテーテルが乾燥状態のときと比較して、表面の摺動抵抗値が大幅に低減しており、体腔への挿入操作の操作性向上が示唆された。

【０１７７】その後、カテーテルを表２に示す成分の人工尿に３０秒間浸し、次いで、このカテーテルを包材の第１の空間に戻し、ジッパーを閉じて密封し、所定時間放置した。包材に顔を近づけたが、尿臭気を感じる等、不快な感じは確認されなかった。さらに、脱臭・抗菌シートの抗菌作用により、カテーテルに付着、残存している尿中の細菌、ウイルス等の増殖が抑制された。

【0178】よって、患者は、カテーテル使用後、そのカテーテルを簡便に、また、周辺に気兼ねすることなく自宅へ持ち帰ることが可能であり、精神的負担から開放されるばかりでなく、外気へ尿臭気が漏洩せず、細菌感染のおそれもないため、衛生上も好ましいことが示唆された。

【0179】(実施例8A)実施例1Aと同様のインフレーションシートを熱融着によりシールして、図3に示す構造の小包材を内蔵する包材を成形した。

【0180】包材の第1の空間には、実施例1Aと同様のネラトンカテーテルと小包材とをを入れ、密封した。小包材の第2の空間には、水20ml を入れ、密封した。また、第1の空間には、水不透過性多孔質体であるポリエチレン製不織布(商標名:タイベック、旭・デュポンフラッシュスパンプロダクツ(株)製)により包装された消臭・芳香剤(商標名:エアニップ、有限会社タクト製)を入れた。

【0181】包材および小包材のシール部(弱シール部以外の部位)は、200℃、4秒、0.25kgf/cm²で、弱シール部は、105℃、4秒、0.25kgf/cm²でそれぞれヒートシールし、110℃、60分間高圧蒸気滅菌を行った。

【0182】滅菌後、この包装体を激しく振動させたが、弱シール部の剥離は観察されず、第2の空間内の液体とカテーテルとの接触はなかった。

【0183】次に、小包材を包材の上から手で押圧、圧迫し、弱シール部23に負荷をかけたところ、弱シール部23のみが剥離し、第2の空間内の水が第1の空間内へ流出し、カテーテルと接触した。これにより、簡便にかつ無菌的に水とカテーテルとの接触が可能であることが確認された。なお、包材内で小包材を好適な位置へ移動してこの操作を行ったため、小包材の開封操作をより簡便、確実に行うことができた。

【0184】また、第2の空間内の水とカテーテルとの接触後、弱シール部24を開封し、カテーテルを取り出して表面を擦って見たところ、カテーテルが乾燥状態のときと比較して、表面の摺動抵抗値が大幅に低減しており、体腔への挿入操作の操作性向上が示唆された。

【0185】その後、カテーテルを表2に示す成分の人工尿に30秒間浸し、次いで、このカテーテルを包材の第1の空間に戻し、ジッパーを閉じて密封し、所定時間放置した。包材に顔を近づけたが、尿臭気を感じる等、不快な感じは確認されなかった。さらに、脱臭・抗菌剤の抗菌作用により、カテーテルに付着、残存している尿中の細菌、ウイルス等の増殖が抑制された。

【0186】よって、患者は、カテーテル使用後、そのカテーテルを簡便に、また、周辺に気兼ねすることなく自宅へ持ち帰ることが可能であり、精神的負担から開放されるばかりでなく、外気へ尿臭気が漏洩せず、細菌感染のおそれもないため、衛生上も好ましいことが示唆された。

【0187】(実施例1B)ポリプロピレン(XF1800、チッソ(株)製)60重両部とスチレン系エラストマー(ハイブラHVS-3、クラレ(株)製)40重量部を用いて、共押出成形によるインフレーションシート(厚さ300μm、水蒸気透過度15g/m²・24hrs・25μm厚・40℃・90%RH)を得た。このシートを熱融着によりシールして、図4に示す構造の包材を成形した。

【0188】包材の第1の空間には、前記実施例1Aと同様のネラトンカテーテルを入れ、第2の空間には、水10mlを入れ、第3の空間には、吸水性材料である架橋ポリアクリル酸ナトリウム(商標名:アクアリック、日本触媒化学工業(株)製)1gを入れ、それぞれを密封した。

【0189】包材のシール部(弱シール部以外の部位)は、200℃、4秒、0.25kgf/cm²で、弱シール部は、105℃、4秒、0.25kgf/cm²でそれぞれヒートシールし、2Mradでγ線滅菌を行った。

【0190】滅菌後、この包装体を激しく振動させたが、弱シール部の剥離は観察されず、水とカテーテルとの接触および水と吸水性材料との接触はなかった。

【0191】次に、包材を手で押圧、圧迫し、弱シール部26に負荷をかけたところ、弱シール部26のみが剥離し、第2の空間内の水が第1の空間内へ流出し、カテーテルと接触した。これにより、簡便にかつ無菌的に水とカテーテルとの接触が可能であることが確認された。

【0192】また、水とカテーテルとの接触後、弱シール部24を開封し、カテーテルを取り出して表面を擦って見たところ、表面が潤滑性を示し、摩擦抵抗が低減しており、体腔への挿入操作の操作性の向上が示唆された。

【0193】その後、カテーテルを牛血に30秒間浸し、次いで、このカテーテルを包材の第1の空間に戻し、ジッパーを閉じて密封した。

【0194】次に、弱シール部27を開封して第1の空間と第3の空間とを連通させ、包材を振動させたところ、カテーテルの表面および内部に付着、残存していた血液が第3の空間内の吸水性材料に吸収され、保持された。そのため、ジッパーを開封しても血液の漏洩は生じなかった。

【0195】よって、使用済みのカテーテルを包材に入れて搬送し、包材ごと廃棄しても、その間に血液の漏洩がなく、血液による汚染、感染が防止され、安全性が高いことが示唆された。

【0196】(実施例2B)実施例1Bと同様のインフレーションシートを熱融着によりシールして、図5に示す構造の小包材を内蔵する包材を成形した。

【0197】包材の第1の空間には、前記実施例1Aと

同様のネラトンカテーテルおよびガイドワイヤー（カテーテルの内腔に挿入された状態）と、小包材とを入れ、密封した。小包材の第２の空間には、血液抗凝固剤液として前記表１に示すＣＰＤＡ－１液１８ｍｌを入れ、密封した。包材の第３の空間には、吸水性材料である架橋ポリアクリル酸ナトリウム（商標名：アクアリック、日本触媒化学工業（株）製）２ｇを入れ、密封した。

【０１９８】包材および小包材のシール部（弱シール部以外の部位）は、２００℃、４秒、０．２５ｋｇｆ／ｃｍ^{2}で、弱シール部は、１０５℃、４秒、０．２５ｋｇｆ／ｃｍ^{2}でそれぞれヒートシールし、２Ｍｒａｄでγ線滅菌を行った。

【０１９９】滅菌後、この包装体を激しく振動させたが、弱シール部の剥離は観察されず、抗凝固剤液とカテーテルとの接触および抗凝固剤液と吸水性材料との接触はなかった。

【０２００】次に、小包材を包材の上から手で押圧、圧迫し、弱シール部２３に負荷をかけたところ、弱シール部２３のみが剥離し、第２の空間内の抗凝固剤液が第１の空間内へ流出し、カテーテルと接触した。これにより、簡便にかつ無菌的に抗凝固剤液とカテーテルとの接触が可能であることが確認された。なお、包材内で小包材を好適な位置へ移動してこの操作を行ったため、小包材の開封操作をより簡便、確実に行うことができた。

【０２０１】また、抗凝固剤液とカテーテルとの接触後、弱シール部２４を開封し、カテーテルを取り出して表面を擦って見たところ、抗凝固剤液の水分によりカテーテル表面が潤滑性を示し、摩擦抵抗が低減しており、体腔への挿入操作の操作性の向上が示唆された。また、カテーテルの表面には、抗凝固剤が付着しているため、血管内へ挿入した際に、優れた抗凝固作用を発揮するものと考えられる。

【０２０２】その後、カテーテルを牛血に３０秒間浸し、次いで、このカテーテルを包材の第１の空間に戻し、ジッパーを閉じて密封した。

【０２０３】次に、弱シール部２７を開封して第１の空間と第３の空間とを連通させ、包材を振動させたところ、カテーテルの表面および内部に付着、残存していた血液が第３の空間内の吸水性材料に吸収され、保持された。そのため、ジッパーを開封しても血液の漏洩は生じなかった。

【０２０４】よって、使用済みのカテーテルを包材に入れて搬送し、包材ごと廃棄しても、その間に血液の漏洩がなく、血液による汚染、感染が防止され、安全性が高いことが示唆された。

【０２０５】（実施例３Ｂ）実施例１Ｂと同様のインフレーションシートを熱融着によりシールして、図６に示す構造の小包材を内臓する包材を成形した。

【０２０６】包材の第１の空間には、前記実施例１Ａと同様のネラトンカテーテルおよびガイドワイヤー（カテーテルの内腔に挿入された状態）と、小包材とを入れ、密封した。小包材の第２の空間には、血液抗凝固剤液として前記表１に示すヘパリン液１８ｍｌを入れ、第３の空間には、吸水性材料である架橋ポリアクリル酸ナトリウム（商標名：アクアリック、日本触媒化学工業（株）製）２ｇを入れ、それぞれを密封した。

【０２０７】包材および小包材のシール部（弱シール部以外の部位）は、２００℃、４秒、０．２５ｋｇｆ／ｃｍ^{2}で、弱シール部は、１０５℃、４秒、０．２５ｋｇｆ／ｃｍ^{2}でそれぞれヒートシールし、２Ｍｒａｄでγ線滅菌を行った。

【０２０８】滅菌後、この包装体を激しく振動させたが、弱シール部の剥離は観察されず、抗凝固剤液とカテーテルとの接触および抗凝固剤液と吸水性材料との接触はなかった。

【０２０９】次に、小包材の図６中上半分を包材の上から手で押圧、圧迫し、弱シール部２６に負荷をかけたところ、弱シール部２６のみが剥離し、第２の空間内の抗凝固剤液が第１の空間内へ流出し、カテーテルと接触した。これにより、簡便にかつ無菌的に抗凝固剤液とカテーテルとの接触が可能であることが確認された。なお、包材内で小包材を好適な位置へ移動してこの操作を行ったため、弱シール部２６の開封操作をより簡便、確実に行うことができた。

【０２１０】また、抗凝固剤液とカテーテルとの接触後、弱シール部２４を開封し、カテーテルを取り出して表面を擦って見たところ、抗凝固剤液の水分によりカテーテル表面が潤滑性を示し、摩擦抵抗が低減しており、体腔への挿入操作の操作性の向上が示唆された。また、カテーテルの表面には、抗凝固剤が付着しているため、血管内へ挿入した際に、優れた抗凝固作用を発揮するものと考えられる。

【０２１１】その後、カテーテルを牛血に３０秒間浸し、次いで、このカテーテルとガイドワイヤーとを包材の第１の空間に戻し、ジッパーを閉じて密封した。

【０２１２】次に、小包材の弱シール部２７を開封して第１の空間と第３の空間とを連通させ、包材を振動させたところ、カテーテルの表面および内部に付着、残存していた血液が第３の空間内の吸水性材料に吸収され、保持された。そのため、ジッパーを開封しても血液の漏洩は生じなかった。なお、包材内で小包材を好適な位置へ移動してこの操作を行ったため、弱シール部２７の開封操作および残存血液の吸収をより簡便、確実に行うことができた。

【０２１３】よって、使用済みのカテーテルを包材に入れて搬送し、包材ごと廃棄しても、その間に血液の漏洩がなく、それによる汚染、感染が防止され、安全性が高いことが示唆された。

【０２１４】（実施例４Ｂ、５Ｂ、６Ｂ）実施例１Ｂと同様のインフレーションシートを熱融着によりシールし

て、図7に示す構造の包材を成形した。

【0215】包材の第1の空間には、前記実施例1Bと同様のネラトンカテーテル（表面のコーティングなし）を入れ、第2の空間には、下記表5に示す組成の潤滑剤等を入れ、それぞれを密封した。また、第3の空間には、下記表5に示す吸水性材料を入れ、密封した。

【0216】

【表5】

表 5　第2、第3の空間の収納物

実施例	潤滑剤等	吸水性材料
4B	グリセリン水溶液 （健栄製薬（株）製）	サンウエット （三洋化成（株）製）
5B	生理食塩水 （テルモ（株）製）	スミカゲル （住友化学（株）製）
6B	ミルトン液 （マックスファクター（株）製）	アクアリザーブGP （日本合成化学（株）製）

【0217】包材のシール部（弱シール部以外の部位）は、200℃、4秒、0．25kgf／cm²で、弱シール部は、105℃、4秒、0．25kgf／cm²でそれぞれヒートシールし、2Mradでγ線滅菌を行った。

【0218】滅菌後、この包装体を激しく振動させたが、弱シール部の剥離や封止部材の破断は観察されず、潤滑剤とカテーテルとの接触および潤滑剤と吸水性材料との接触はなかった。

【0219】次に、包材の外側から封止部材（図8に示す構造）を手で折り曲げ、中実柱状部を破断部にて破断分離し、包材の第2の空間の部分を圧迫したところ、第2の空間内の潤滑剤が第1の空間内へ流出し、カテーテルと接触した。これにより、簡便にかつ無菌的に潤滑剤とカテーテルとの接触が可能であることが確認された。

【0220】また、潤滑剤とカテーテルとの接触後、弱シール部24を開封し、カテーテルを取り出して表面を擦って見たところ、表面が潤滑性を示し、摩擦抵抗が低減しており、体腔への挿入操作の操作性の向上が示唆された。

【0221】その後、カテーテルを表2に示す成分の人工尿に30秒間浸し、次いで、このカテーテルを包材の第1の空間に戻し、ジッパーを閉じて密封した。

【0222】次に、弱シール部27を開封して第1の空間と第3の空間とを連通させ、包材を振動させたところ、カテーテルの表面および内部に付着、残存していた人工尿が第3の空間内の吸水性材料に吸収され、保持された。そのため、ジッパーを開封しても人工尿の漏洩は生じなかった。

【0223】よって、使用済みのカテーテルを包材に入れて搬送し、包材ごと廃棄しても、その間に尿等の体液の漏洩がなく、それによる汚染、感染が防止され、安全性が高いことが示唆された。

【0224】（実施例1C）包材を構成するシートとして、ポリプロピレン（三菱化学（株）製、SPX9600）の単層フィルム（フィルム厚300μm、水蒸気透過度21g／m²・24hrs・25μm厚・40℃・90%RH）を用いた以外は、実施例1Aと同様にして、図1に示す構成の包装体を製造した。包材の第1の空間および第2の空間内の収納物も、実施例1Aと同様である。

【0225】（実施例2C）包材を構成するシートとして、直鎖状低密度ポリエチレン（日本ポリケム（株）製、ノバテックLL　UF340）とポリプロピレン（チッソ（株）製、チッソポリプロ　K7714）とのポリマーブレンドによる単層フィルム（フィルム厚300μm、水蒸気透過度18g／m²・24hrs・25μm厚・40℃・90%RH）を用いた以外は、実施例1Aと同様にして、図1に示す構成の包装体を製造した。包材の第1の空間および第2の空間内の収納物も、実施例1Aと同様である。

【0226】（実施例3C）包材を構成するシートとして、直鎖状低密度ポリエチレンとポリプロピレンとのポリマーブレンドフィルムによる第1層、およびシリカ蒸着ポリエチレンテレフタレートフィルムによる第2層から構成される2層積層フィルム（大日本印刷（株）製、フィルム厚300μm、水蒸気透過度0．6g／m²・24hrs・25μm厚・40℃・90%RH）を、第1層同士が接合されるように用いた以外は、実施例1Aと同様にして、図1に示す構成の包装体を製造した。包材の第1の空間および第2の空間内の収納物も、実施例1Aと同様である。

【0227】（実施例4C）包材を構成するシートとして、直鎖状低密度ポリエチレンとポリプロピレンとのポリマーブレンドフィルムによる第1層、アルミニウムフィルムによる第2層、およびポリエチレンテレフタレートフィルムによる第3層から構成される3層積層フィルム（東洋アルミニウム（株）製、フィルム厚300μm、水蒸気透過度0．3g／m²・24hrs・25μm厚・40℃・90%RH）を、第1層同士が接合されるように用いた以外は、実施例1Aと同様にして、図1に示す構成の包装体を製造した。包材の第1の空間および第2の空間内の収納物も、実施例1Aと同様である。

【0228】（実施例5C）第2の空間に収納した液体

をグリセリン水溶液（健栄製薬（株）製、グリセリン濃度：８４〜８７％）１０ｍｌとした以外は、実施例４Ｃと同様の包装体を製造した。

【０２２９】<試験１>実施例１Ｃ〜５Ｃの各包装体を温度４０℃、湿度７５％ＲＨの環境下で４週間放置し、１週間後、２週間後および４週間後に、それぞれ、第２の空間内に収納された液体の減少率の経時変化を調べた。その結果を下記表６に示す。ここで、液体の減少率は、次式により算出した。

【０２３０】減少率（％）＝（W_0−Ｗ）／W_0×１００

ここで、　W_0：試験開始時の液体の総重量（１０ｇ）

Ｗ　：１、２、４週間後のそれぞれの液体の重量

【０２３１】

【表６】

表　6　　液体の減少率

実施例	1週間後	2週間後	4週間後
1C	0．5％	1．1％	2．0％
2C	0．4％	0．9％	1．7％
3C	0．2％	0．3％	0．7％
4C	0．1％	0．1％	0．3％
5C	0．0％	0．0％	0．1％

【０２３２】表６に示すように、実施例１Ｃ〜５Ｃの包装体は、いずれも、包材が水蒸気バリヤー性を有するため、液体の減少率が低く、従って、第２の空間内の液体の減少、濃縮を防止することができるとともに、第１の空間内への水蒸気の侵入も防止することができることが確認された。

【０２３３】特に、水蒸気透過度が１ｇ／m^2・２４ｈｒｓ・２５μｍ厚・４０℃・９０％ＲＨ以下の実施例３Ｃ〜５Ｃの包装体は、液体の減少率が極めて少なく、このような効果がより顕著に発現する。なお、実施例５Ｃにおいては、第２の空間内に収納される液体が、水よりも揮発性の低いグリセリン水溶液であったため、液体の減少は、ほとんど生じなかった。

【０２３４】<試験２>実施例１Ｃ〜５Ｃの各包装体について、前記環境下でさらに４週間放置したが、弱シール部２３、２４の剥離は認められず、第２の空間からの水の漏れ出しは生じなかった。

【０２３５】また、その後、包材の第２の空間を形成する部分を手で押圧、圧迫したところ、いずれの包装体についても、弱シール部２３を容易かつ確実に剥離することができ、イージーピールシール性が確保されていることが確認された。

【０２３６】<包装体の有効保存期間の検討>本実施例の包装体において、第２の空間内に収納されている液体が蒸散により減少し、その重量が約半分以下になると、加圧による弱シール部の開封（剥離）がし難くなってくる。従って、本試験条件下において、第２の空間内に収納されている液体の量が半分まで減少する時間を次式により算出した。

【０２３７】

時間（年）＝（５ｇ／ΔＷ）×（２８日／３６５日）

ここで、ΔＷ：４週間後の液体の減少量

ΔＷ＝１０ｇ×（４週間後の液体の減少率／１００）

【０２３８】その結果、実施例１Ｃで１．９年、実施例２Ｃで２．２年、実施例３Ｃで５．４年、実施例４で１２．７年、実施例５Ｃで３８．０年となる。

【０２３９】以上の結果より、実施例１Ｃ〜５Ｃのような水蒸気バリヤー性を有する包材を用いることにより、収納される液体の減少を抑制し、長期間保持することが可能であることが分かった。

【０２４０】

【発明の効果】以上述べたように、本発明によれば、簡便にかつ無菌的にカテーテル等の器具と液体とを接触させることができる。特に、包材内の隔離された空間同士の連通操作や、包材の開封操作を容易かつ確実に行うことができる。

【０２４１】また、第２の空間に収納する液体の種類、組成、量等の選択により、器具に対し種々の機能、特に、表面の潤滑性、抗凝固性（抗血栓性）等の、器具を生体に挿入または装着するに際しての有利な機能を付与することができる。

【０２４２】また、使用済みの器具を包材内に収納することにより、外部への臭気の放散、微生物の増殖、または器具に付着または残存した液体の漏れ出しによる汚染、感染等を防止することができ、安全性の向上にも寄与する。また、包装体の小型化にも有利である。そのため、使用済みの器具の廃棄処理、または廃棄処理までの間の運搬、保管に有利となる。

【０２４３】特に、患者自身がカテーテルを使って排尿する自己導尿においては、外出時の使用済みカテーテルの搬送、廃棄において、労力や精神的負担が軽減されるため、患者の快適な生活（クオリティー・オブ・ライフ）に大きく貢献する。

【図面の簡単な説明】

【図1】本発明の包装体の第1実施例を示す平面図（内部透視図）である。
【図2】本発明の包装体の第3実施例を示す平面図（内部透視図）である。
【図3】本発明の包装体の第4実施例を示す平面図（内部透視図）である。
【図4】本発明の包装体の第5実施例を示す平面図（内部透視図）である。
【図5】本発明の包装体の第6実施例を示す平面図（内部透視図）である。
【図6】本発明の包装体の第7実施例を示す平面図（内部透視図）である。
【図7】本発明の包装体の第8実施例を示す平面図（内部透視図）である。
【図8】封止部材の構成例を示す縦断面図である。
【符号の説明】

1	包装体
2	包材
21	シール部
22	仕切部
23、24	弱シール部
25	仕切部
26、27	弱シール部
28、29	仕切部
3	ジッパー
4	第1の空間
5	第2の空間
6	第3の空間
7	カテーテル
8	脱臭剤
81	容器
9	抗菌シート
10	流動性物質
11	小包材
12	吸水性材料
13	封止部材
131	短チューブ
132	筒体
133	中実柱状部
134	破断部
135	上端部
136	縮径部
14	小包材

【図1】

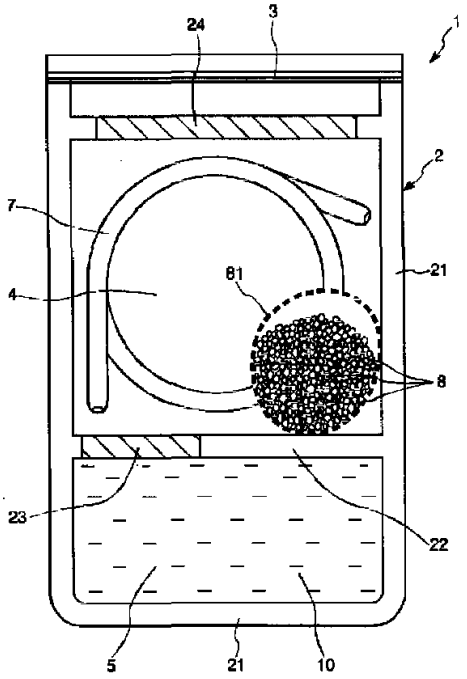

【図2】

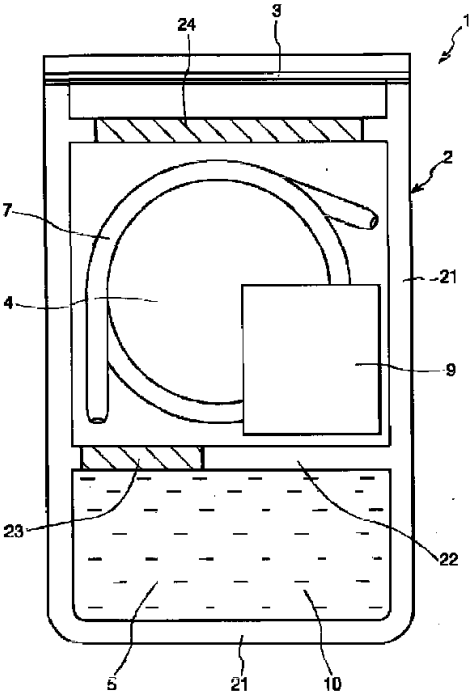

【図3】

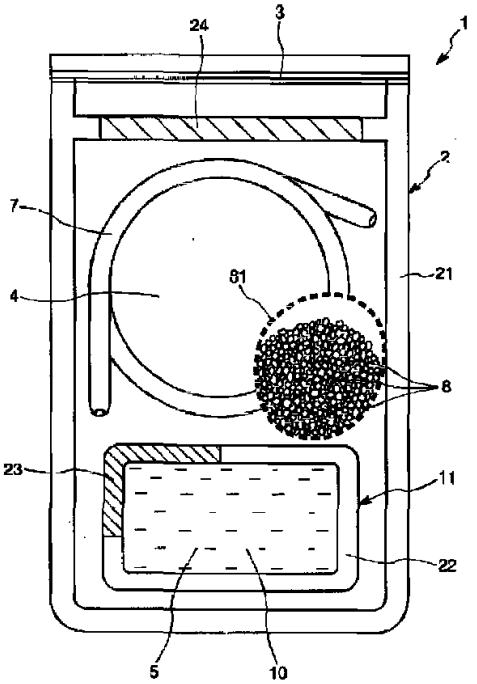
24
3
1
2
7
21
4
31
8
23
11
22
5
10

【図4】

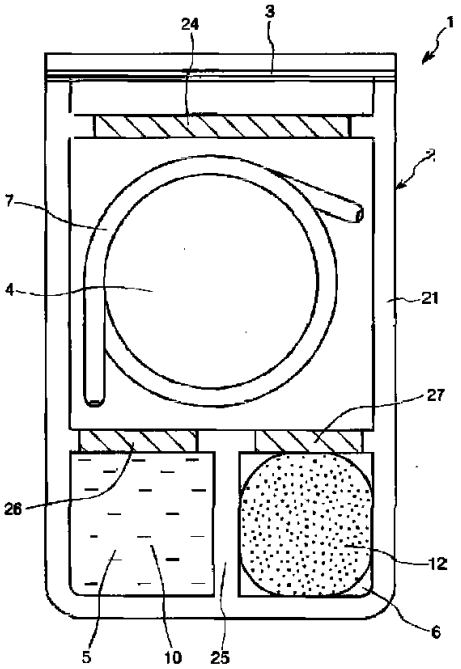
24
3
1
2
7
21
4
27
26
12
6
5
10
25

【図5】

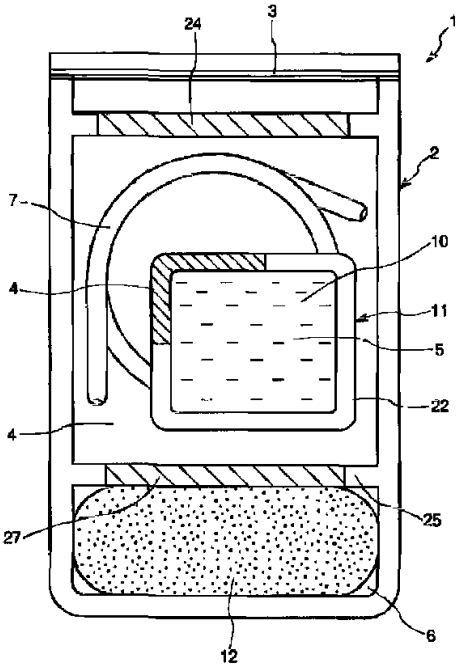
24
3
1
2
7
10
4
11
5
22
4
27
25
6
12

【図6】

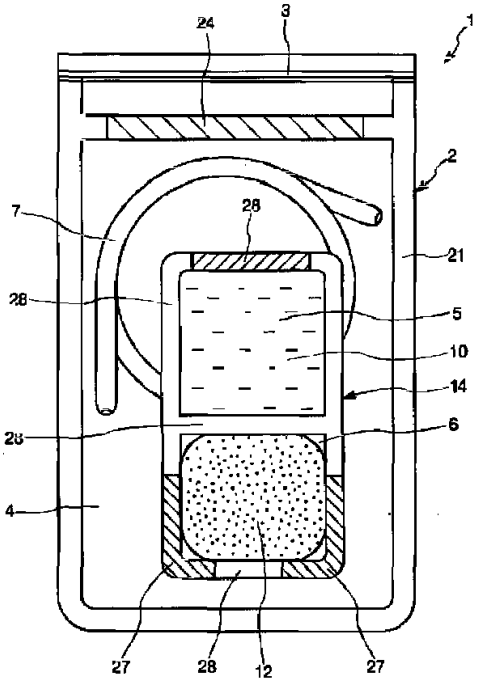
24
3
1
2
7
28
21
28
5
10
14
28
6
4
27
28
12
27

【図7】

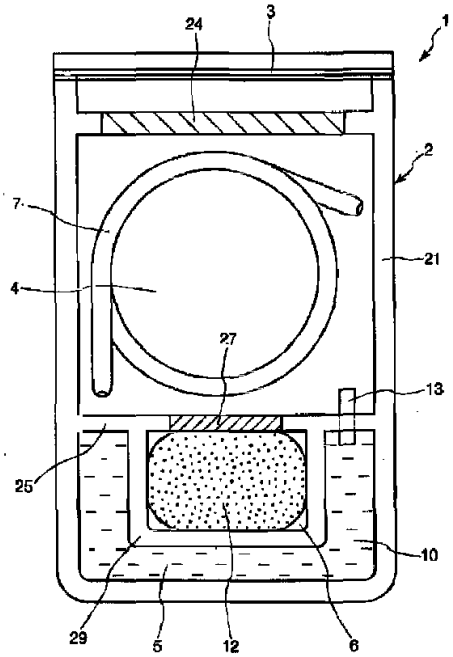

【図8】

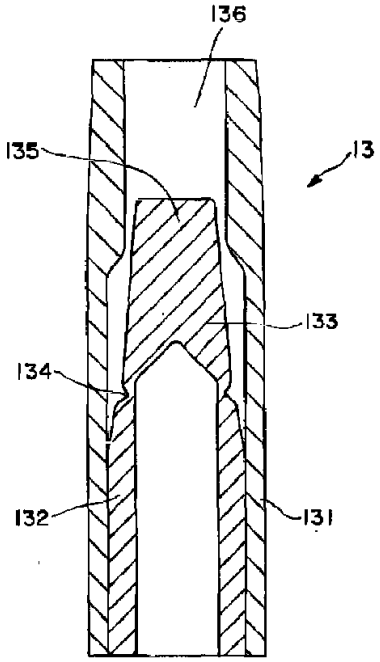

フロントページの続き

(72)発明者　今井　正臣
東京都渋谷区幡ヶ谷２丁目44番１号　テルモ株式会社内

Ｆターム(参考)　3E067 AA03 AA11 AB83 AB96 AB97 AC06 BB12A BB14A BB15A BB16A BB25A CA05 CA09 CA24 EA06 EA25 EB17 EE21 GB15 GC05 GD08

EXHIBIT 1

US008448786B2

(12) **United States Patent**
Tomes et al.

(10) **Patent No.: US 8,448,786 B2**
(45) **Date of Patent: *May 28, 2013**

(54) **CATHETER TRAY, PACKAGING SYSTEM, INSTRUCTION INSERT, AND ASSOCIATED METHODS**

(75) Inventors: **Jennifer E. Tomes**, Mundelein, IL (US); **Sarah Zyburt**, Chicago, IL (US)

(73) Assignee: **Medline Industries, Inc.**, Mundelein, IL (US)

(*) Notice: Subject to any disclaimer, the term of this patent is extended or adjusted under 35 U.S.C. 154(b) by 110 days.

This patent is subject to a terminal disclaimer.

(21) Appl. No.: **13/155,026**

(22) Filed: **Jun. 7, 2011**

(65) **Prior Publication Data**

US 2011/0290260 A1 Dec. 1, 2011

Related U.S. Application Data

(63) Continuation-in-part of application No. 12/495,148, filed on Jun. 30, 2009, and a continuation-in-part of application No. 12/647,515, filed on Dec. 27, 2009, and a continuation-in-part of application No. 13/153,265, filed on Jun. 3, 2011, and a continuation-in-part of application No. 13/153,300, filed on Jun. 3, 2011.

(60) Provisional application No. 61/352,140, filed on Jun. 7, 2010, provisional application No. 61/352,155, filed on Jun. 7, 2010, provisional application No. 61/428,944, filed on Dec. 31, 2010, provisional application No. 61/437,796, filed on Jan. 31, 2011.

(51) **Int. Cl.**
B65D 83/10 (2006.01)

(52) **U.S. Cl.**
USPC **206/366**; 220/500

(58) **Field of Classification Search**
USPC 604/540, 544; 206/364, 366, 370, 206/438, 570, 571; 220/500; 434/262
See application file for complete search history.

(56) **References Cited**

U.S. PATENT DOCUMENTS

3,329,261 A 7/1967 Serany, Jr. et al.
D218,077 S 7/1970 Gabriel

(Continued)

FOREIGN PATENT DOCUMENTS

WO WO-2007/045943 4/2007

OTHER PUBLICATIONS

Poon, Robert "NonFinal Office Action", U.S. Appl. No. 12/846,675, filed Jul. 29, 2010; Mailed Dec. 22, 2011.

(Continued)

Primary Examiner — Melanie Hand
(74) *Attorney, Agent, or Firm* — David Noskowicz; Philip H. Burrus, IV

(57) **ABSTRACT**

A tray (**100**) for accommodating a coiled medical device, such as a catheter assembly (**700**), includes a first compartment (**101**), a second compartment (**102**), and a third compartment (**103**). The catheter assembly (**700**) and devices associated with a catheterization procedure, such as syringes (**701**,**702**) containing sterile water and lubricating jelly and a specimen container (**703**) can be disposed within the tray. Printed instructions (**1001**) can be included with the tray (**100**). One or more layers of wrap material (**2200**) can be folded about the tray (**100**) to enclose the tray (**100**) and other items, such as an additional layer of wrap material (**2701**), packaged liquid hand sanitizer (**2401**), and packaged gloves (**2402**). When a health care services provider (**3101**) unfolds the wrap material, the same can be used to create a sterile field beneath a patient (**3201**).

5 Claims, 35 Drawing Sheets

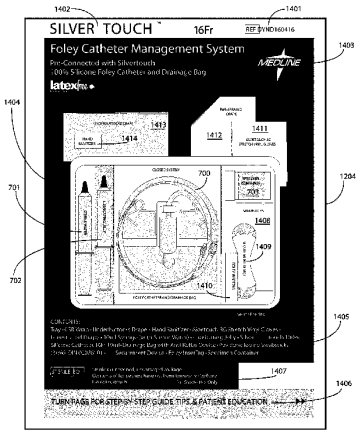

U.S. PATENT DOCUMENTS

3,851,649	A	12/1974	Villari
D234,404	S	2/1975	Merril
D237,315	S	10/1975	Nowkowski
D237,317	S	10/1975	Norkowski
D243,798	S	3/1977	Swartz
D248,871	S	8/1978	Forsman et al.
D249,362	S	9/1978	Forsman et al.
D262,995	S	2/1982	Gaba et al.
D268,130	S	3/1983	Easton
D275,886	S	10/1984	Sheward et al.
D276,462	S	11/1984	Villarreal
4,523,679	A	6/1985	Paikoff et al.
D280,663	S	9/1985	Albon et al.
D280,933	S	10/1985	McLaughlin
D280,993	S	10/1985	Mariol
D283,051	S	3/1986	Fichera
D287,760	S	1/1987	Discko, Jr.
4,761,008	A	8/1988	Huggins
4,991,877	A	2/1991	Lieberman
5,031,768	A	7/1991	Fischer
5,163,557	A	11/1992	Sokolowski
D334,973	S	4/1993	Valentine et al.
D337,830	S	7/1993	Coyne et al.
5,244,394	A	9/1993	Serabian-Musto
D343,687	S	1/1994	Houghton et al.
5,339,955	A	8/1994	Horan et al.
D351,661	S	10/1994	Fischer
5,392,918	A	2/1995	Harrison
5,487,566	A	1/1996	Hedge, Jr.
D380,272	S	6/1997	Partika et al.
D387,177	S	12/1997	Davis
5,720,502	A	2/1998	Cain
5,778,574	A	7/1998	Reuben
5,827,262	A	10/1998	Neftel et al.
5,829,790	A	11/1998	Phillips
5,947,284	A	9/1999	Foster
5,954,369	A	9/1999	Seabrook
5,975,295	A	11/1999	Diamond
6,004,136	A	12/1999	Ehrenpreis
6,012,586	A	1/2000	Misra
6,068,121	A	5/2000	McGlinch
D442,697	S	5/2001	Hajianpour
D450,130	S	11/2001	Goldstein
D450,391	S	11/2001	Hunt et al.
6,659,506	B1	12/2003	Erisalu
6,681,933	B1	1/2004	Demsien et al.
6,793,078	B2	9/2004	Roshdy
6,926,708	B1	8/2005	Franks-Farah et al.
7,264,869	B2	9/2007	Tobita
7,401,703	B2	7/2008	McMichael
D596,311	S	7/2009	Antons
7,624,869	B2	12/2009	Primer
D609,819	S	2/2010	Tomes et al.
2003/0038475	A1	2/2003	Stancil
2003/0075474	A1	4/2003	Moyer et al.
2003/0159969	A1	8/2003	McMichael et al.
2004/0004019	A1	1/2004	Busch
2004/0195145	A1	10/2004	Roshdy
2005/0228691	A1	10/2005	Paparo
2006/0029912	A1	2/2006	Kearby et al.
2006/0088355	A1	4/2006	Ribi
2007/0065792	A1	3/2007	Schubarth
2007/0084742	A1	4/2007	Miller et al.
2008/0116106	A1	5/2008	Lampropoulos et al.
2008/0283426	A1	11/2008	Primer et al.
2008/0283433	A1	11/2008	Primer
2009/0236259	A1	9/2009	Hicks
2010/0274205	A1	10/2010	Morelli et al.
2010/0307942	A1	12/2010	Tomes et al.
2010/0311026	A1 *	12/2010	Tomes et al. 434/262

OTHER PUBLICATIONS

Cavanna, Mark "NonFinal Office Action", U.S. Appl. No. 29/380,474, filed Dec. 26, 2012; Mailed Mar. 27, 2012.
Cavanna, Mark "Notice of Allowance", U.S. Appl. No. 29/338,022, filed Jun. 3, 2009; Mailed Oct. 1, 2009.
Cavanna, Mark "Notice of Allowance", U.S. Appl. No. 29/362,279, filed May 21, 2010, Mailed Sep. 19, 2011.
Poon, Robert "NonFinal Office Action", U.S. Appl. No. 12/647,515, filed Dec. 27, 2009; Mailed Jun. 28, 2012.
Cavanna, Mark "Ex Parte Quayle Action", U.S. Appl. No. 29/380,474, filed Dec. 6, 2010; Mailed Aug. 14, 2012.
Poon, Robert "Restriction Requirement", U.S. Appl. No. 12/647,515, filed Dec. 27, 2009; Mailed May 23, 2012.
Poon, Robert "Non-Final Office Action", U.S. Appl. No. 12/495,148, filed Jun. 30, 2009; first inventor: Jennifer E. Tomes; mailed: Aug. 4, 2010.
Yuan, Minqiang "Non-Final Office Action", Chinese Application No. 200920267201.2, Mailed Sep. 9, 2010.
European Patent Office, "Extended EPO Search Report", EPO Application No. 10251025.2, In the Name of Medline Industries, Mailed Sep. 29, 2010.
Medline, "Medline Aritcle/Brochure", Published 2008.
Yuan, Minquiang "Non-Final Office Action", Chinese Application No. 200920267201.2, Mailed Jun. 4, 2010.
European Patent Office, "Extended EPO Search Report", Application No. 10251024.5, In the Name of Medline Industries, Mailed Oct. 18, 2010.
Examiner, Chinese Patent Office "First Office Action", mailed: Nov. 18, 2010 application 201020219785.9 Filed: Jun. 3, 2010.
Poon, Robert "Final Office Action", U.S. Appl. No. 12/495,148, flied Jun. 30, 2009, Mailed Mar. 3, 2011.
Prange, Sharon M., "Response to First Office Action", Dated: Aug. 6, 2009 U.S. Appl. No. 12/004,796 Inventor: Jonathan S. Primer et al Filed: Dec. 21, 2007.
Byun, Sung C., "PCT Search Report", PCT/US2011/068193; Filed Dec. 30, 2011; Mailed Aug. 22, 2012.
Poon, Robert "Final Office Action", U.S. Appl. No. 12/846,675, filed Jul. 29, 2010; Mailed Sep. 26, 2012.
Poon, Robert "NonFinal Office Action", U.S. Appl. No. 13/374,509, filed Dec. 30, 2011; Mailed Oct. 2, 2012.
Poon, Robert "NonFinal Office Action", U.S. Appl. No. 13/153,300, filed Jun. 3, 2011; Mailed Oct. 1, 2012.
Poon, Robert "NonFinal OA", U.S. Appl. No. 12/495,148, filed Jun. 30, 2009; Mailed Oct. 4, 2012.
Byun, Sung C., "PCT Search Report", PCT/US2012/039311; Filed May 24, 2011; Mailed Oct. 25, 2012.
Byun, Sung Cheal "PCT Search Report and Written Opinion", PCT/US2012/037524; Filed May 11, 2012; Mailed Nov. 16, 2012.
Hand, Melanie J., "NonFinal OA", U.S. Appl. No. 12/785,064, filed May 21, 2010; Mailed Feb. 1, 2013.
Pass, Natalie "NonFinal OA", U.S. Appl. No. 13/153,265, filed Jun. 3, 2011; Mailed Mar. 5, 2013.

* cited by examiner

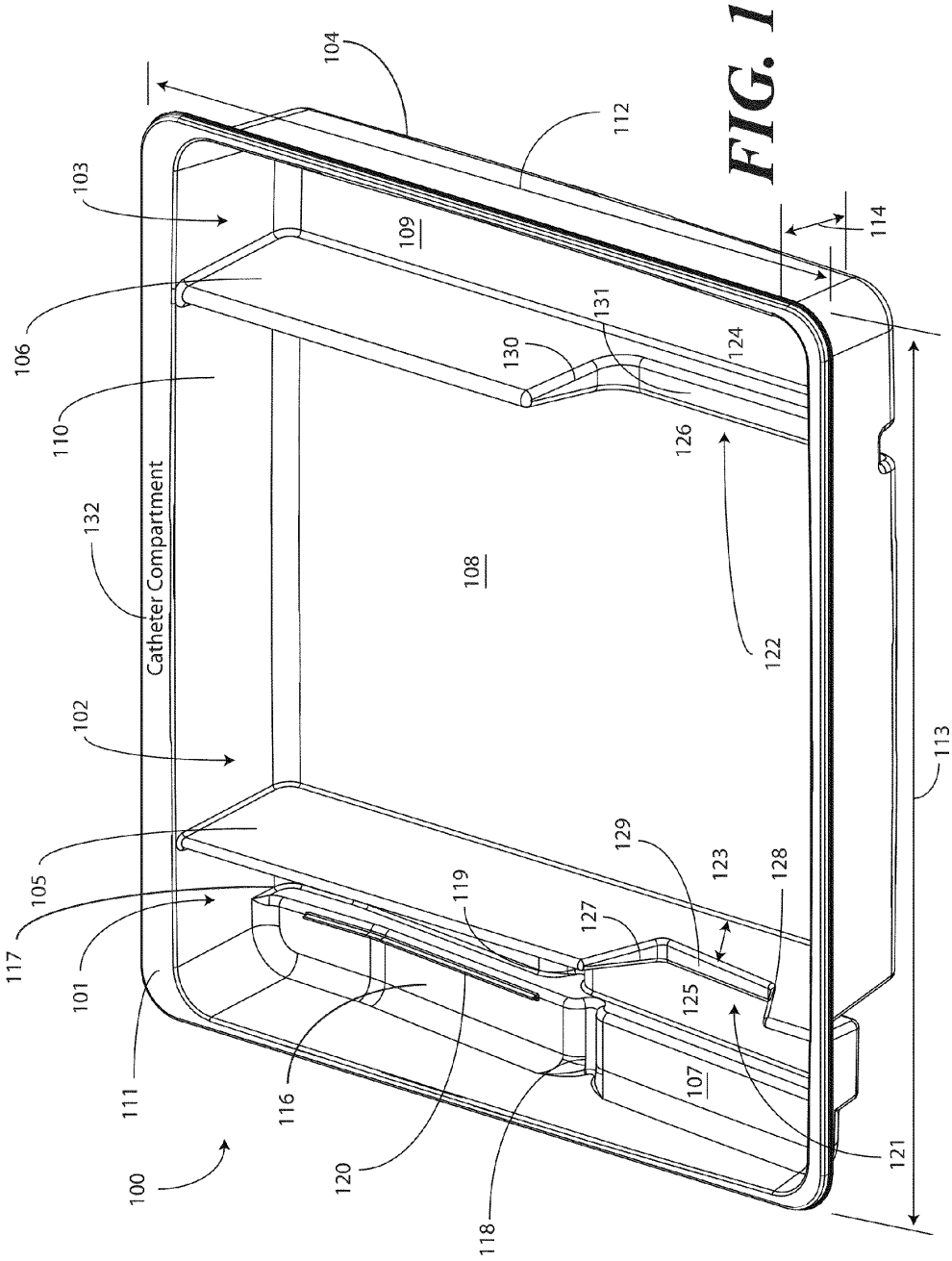

FIG. 1

Bard Exhibit 1004.0705

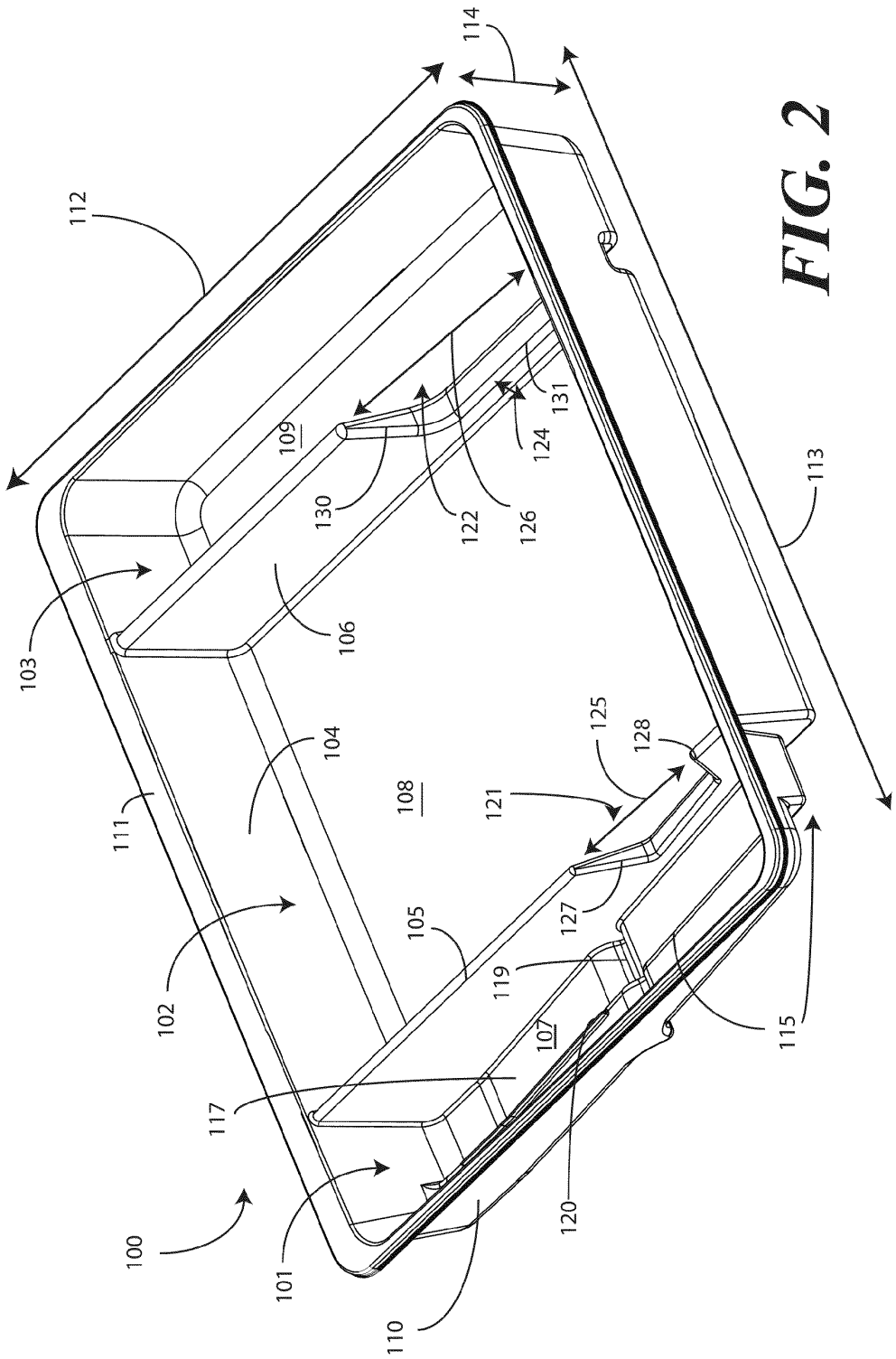
100
101
102
103
104
105
106
107
108
109
110
111
112
113
114
115
117
119
120
121
122
124
125
126
127
128
130
131

FIG. 2

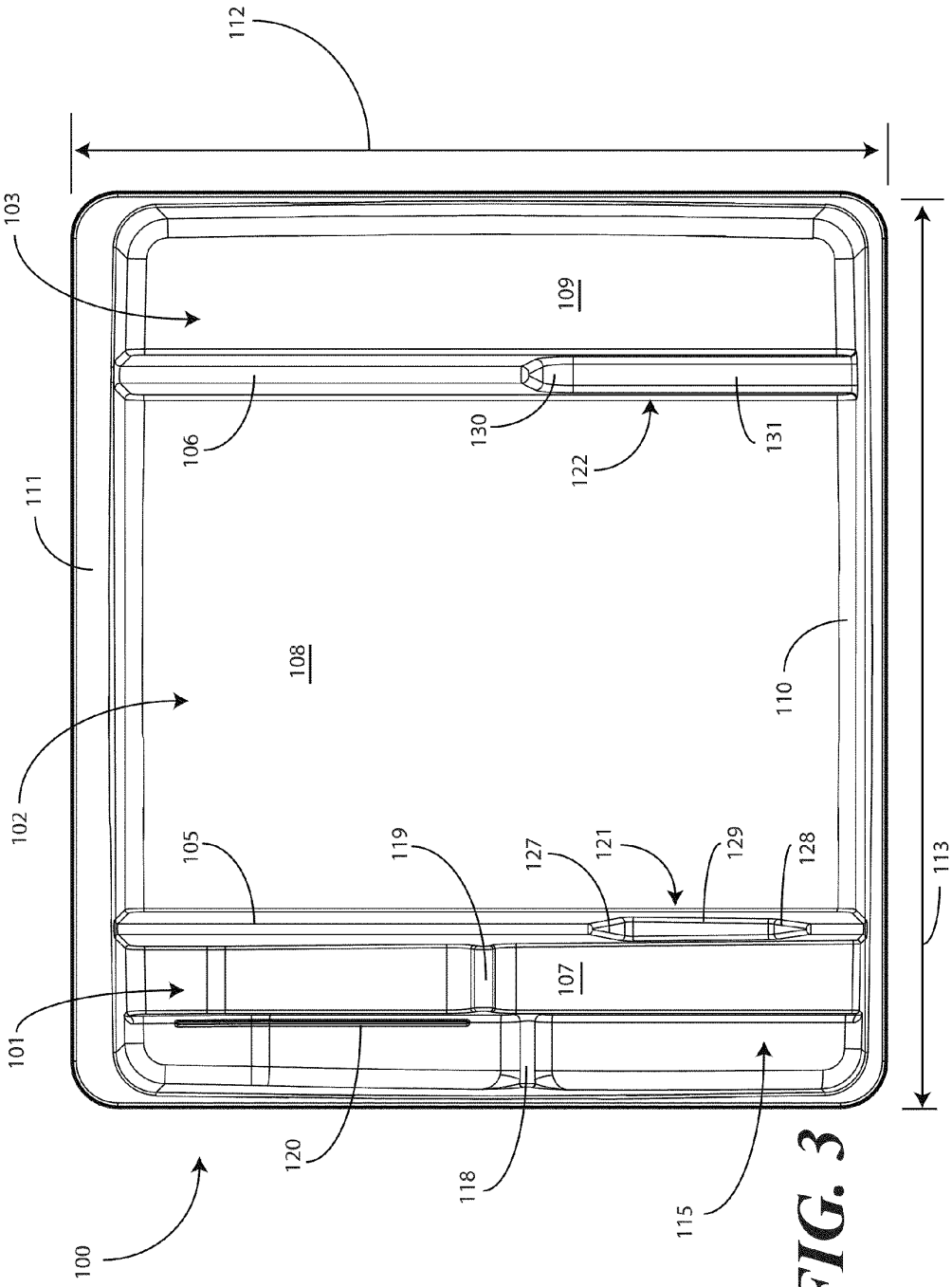
112
103
109
106
130
122
131
111
108
110
102
105
119
127
121
129
128
113
101
107
120
118
115
100

FIG. 3

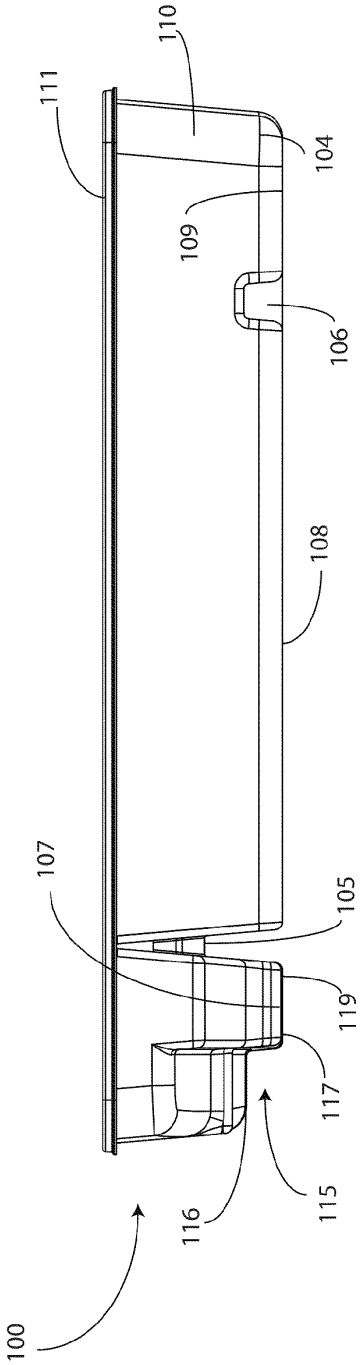
100
116
115
117
119
107
105
108
106
109
104
111
110

FIG. 4

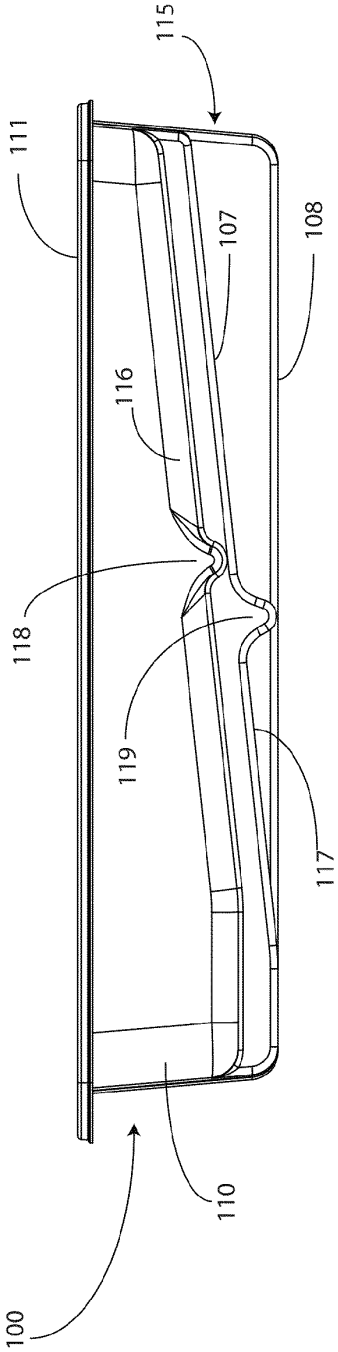
100
110
117
119
118
116
107
108
111
115

FIG. 5

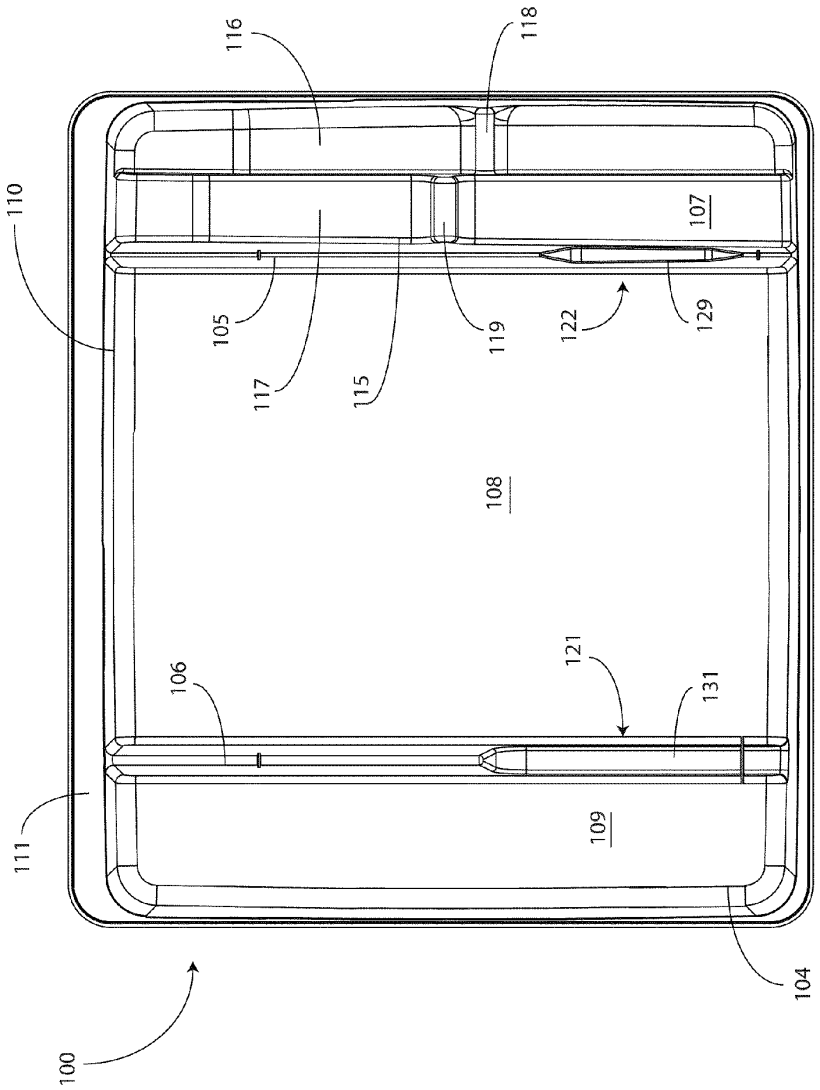
100
110
111
116
118
105
117
115
119
122
129
107
108
106
121
131
109
104

FIG. 6

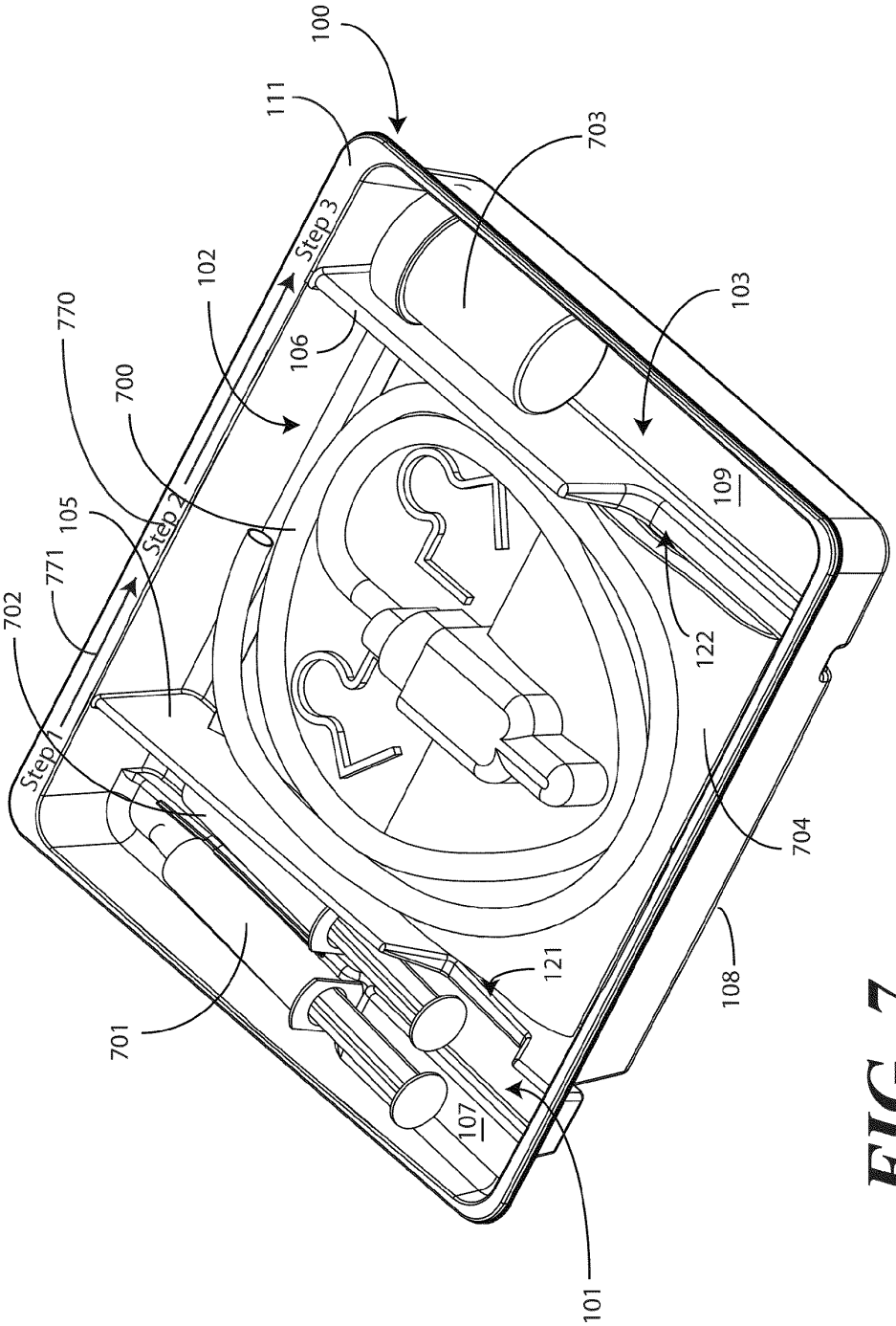
100
111
703
Step 3
102
770
106
103
700
109
105
Step 2
771
122
702
Step 1
704
121
108
701
107
101

FIG. 7

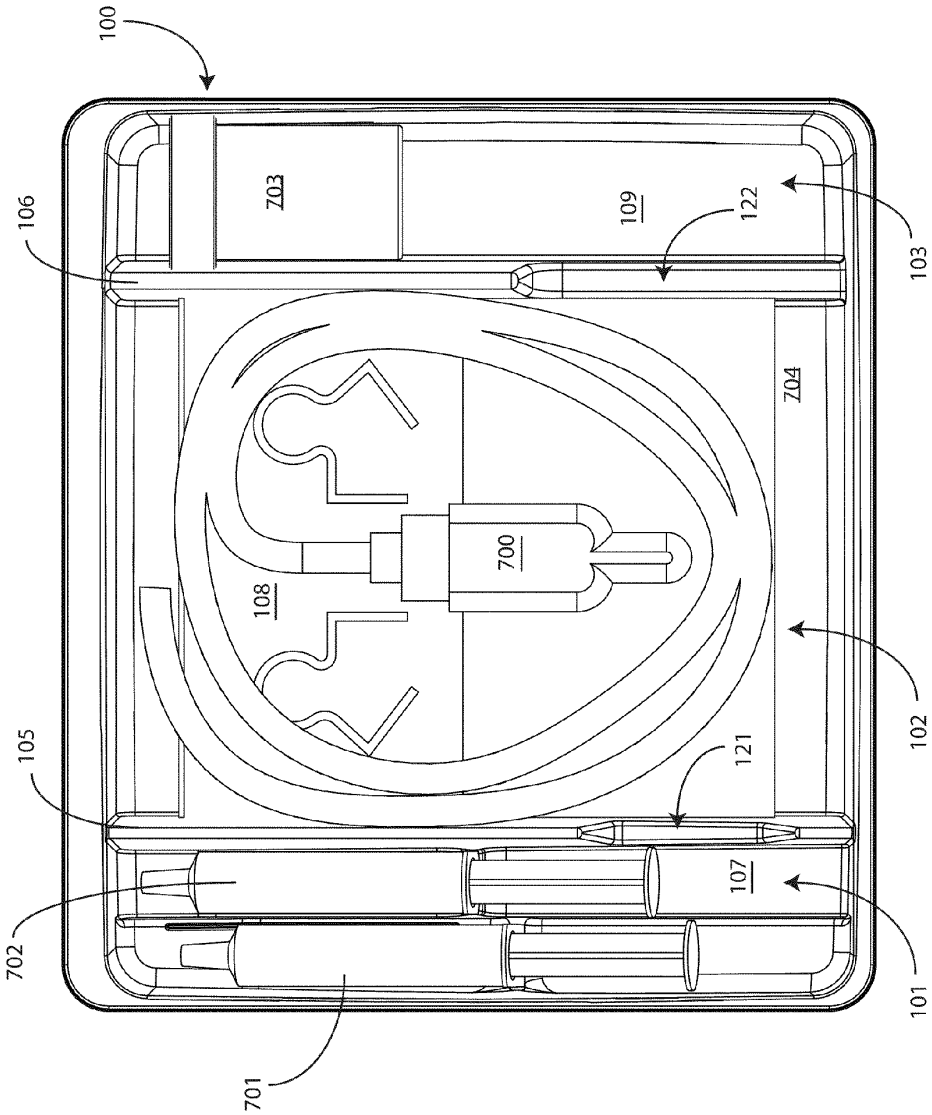

FIG. 8

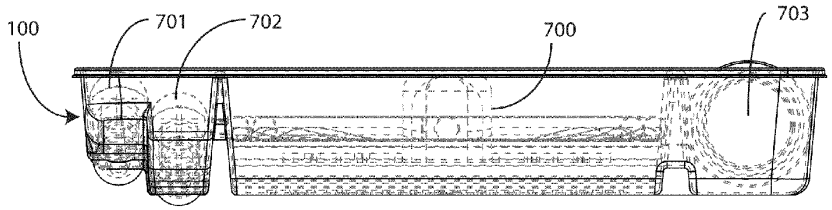
100
701
702
700
703

FIG. 9

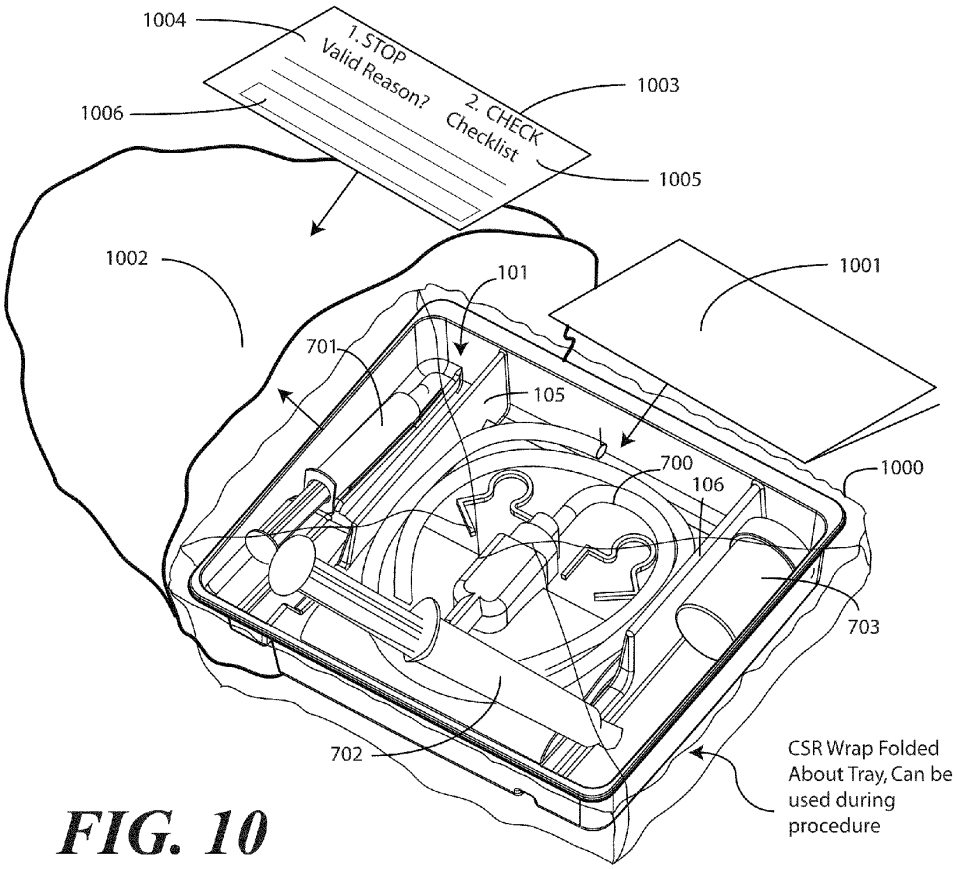
1004
1. STOP
Valid Reason?
2. CHECK
Checklist
1003
1006
1005
1002
101
1001
701
105
700
106
1000
703
702
CSR Wrap Folded
About Tray, Can be
used during
procedure

FIG. 10

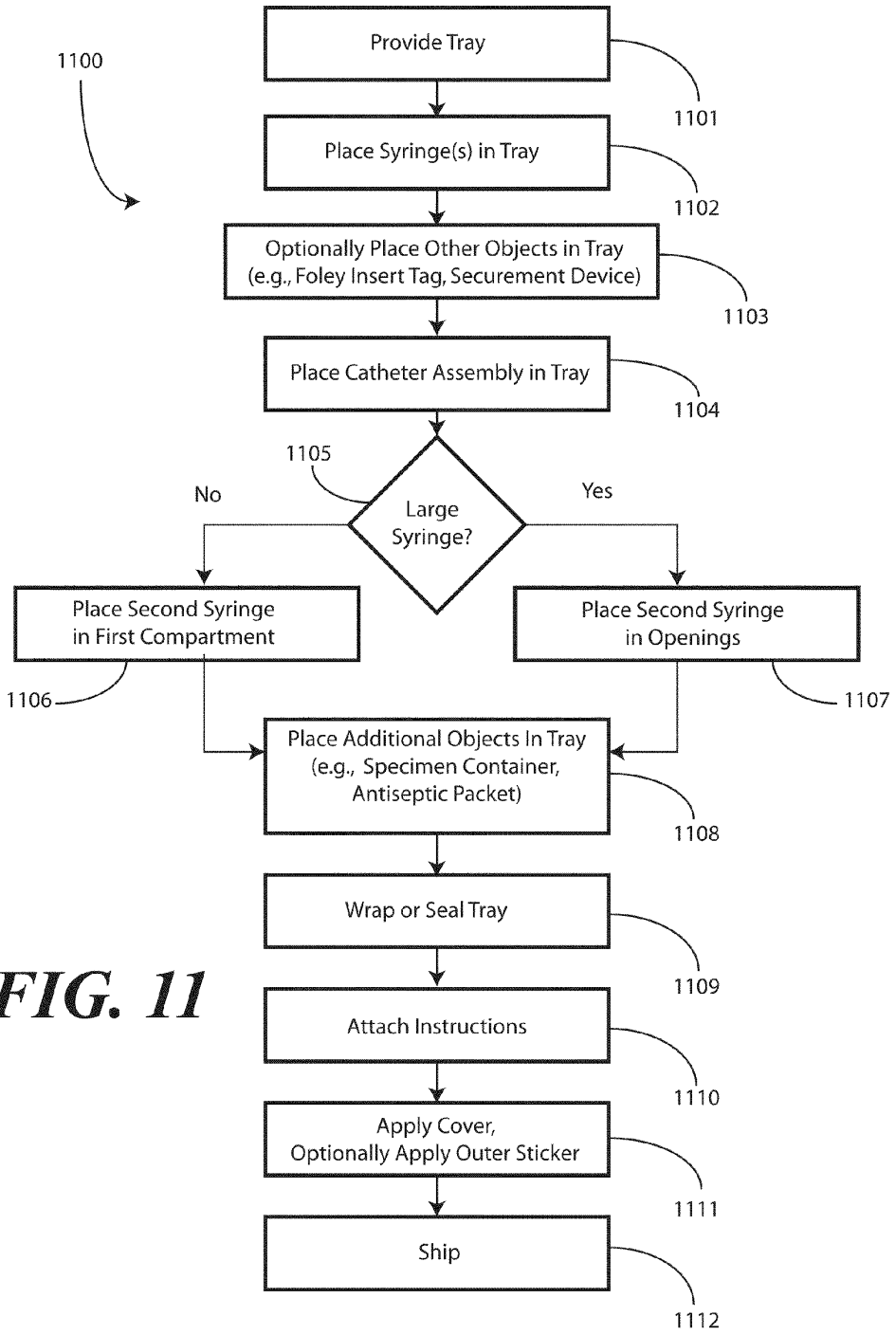
1100
Provide Tray
1101
Place Syringe(s) in Tray
1102
Optionally Place Other Objects in Tray
(e.g., Foley Insert Tag, Securement Device)
1103
Place Catheter Assembly in Tray
1104
1105
Large Syringe?
No
Yes
Place Second Syringe in First Compartment
1106
Place Second Syringe in Openings
1107
Place Additional Objects In Tray
(e.g., Specimen Container, Antiseptic Packet)
1108
Wrap or Seal Tray
1109
Attach Instructions
1110
Apply Cover,
Optionally Apply Outer Sticker
1111
Ship
1112

FIG. 11

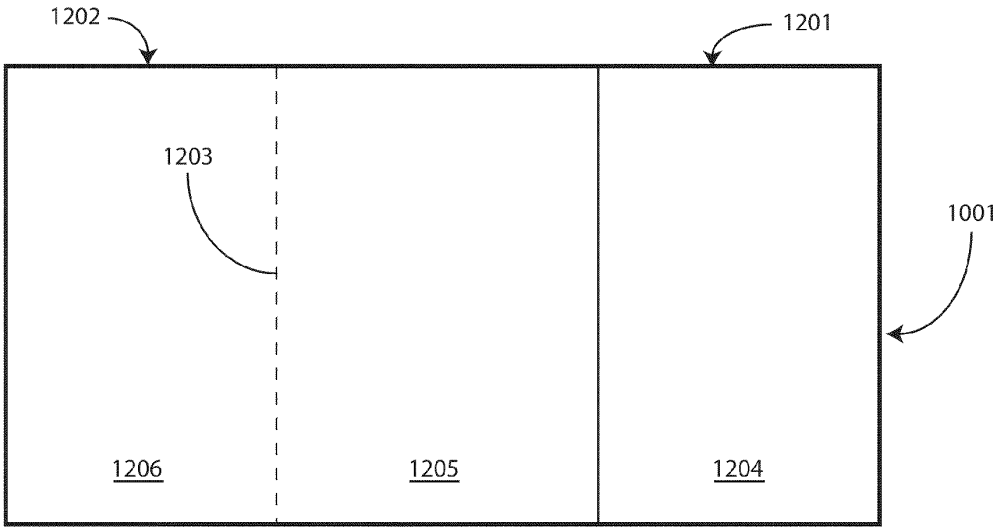
1202
1201
1203
1001
1206
1205
1204

FIG. 12

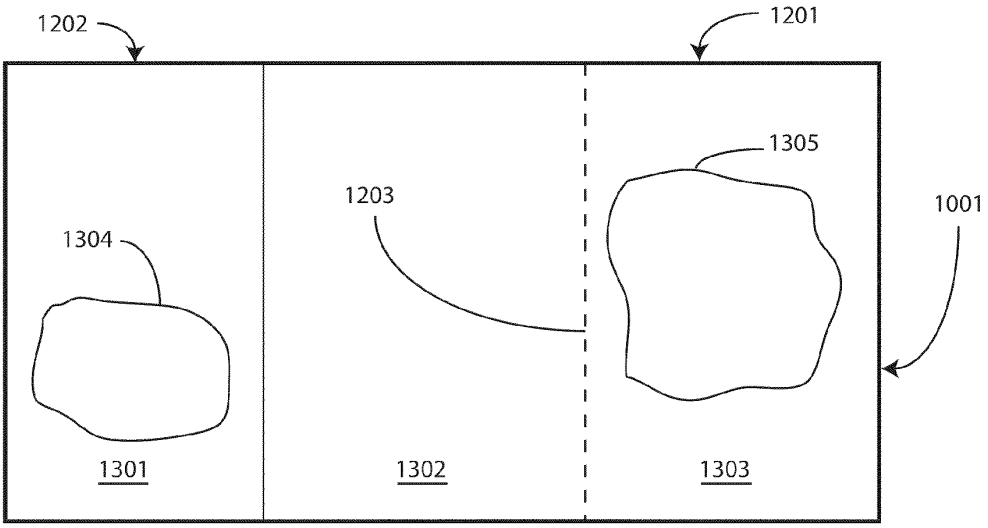
1202
1201
1305
1203
1001
1304
1301
1302
1303

FIG. 13

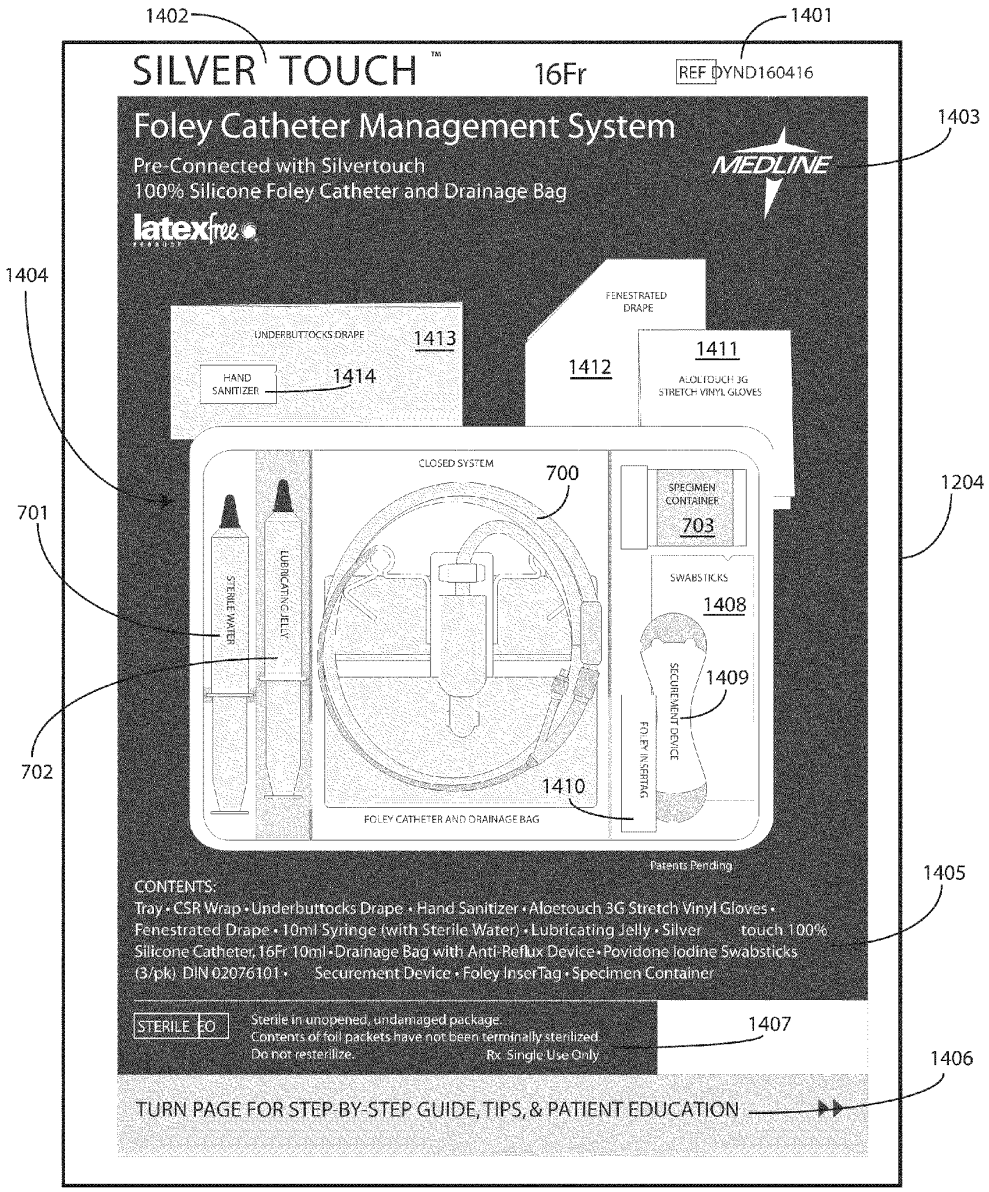
1402
1401
SILVER TOUCH™
16Fr
REF DYND160416
Foley Catheter Management System
Pre-Connected with Silvertouch
100% Silicone Foley Catheter and Drainage Bag
MEDLINE
1403
latexfree
1404
FENESTRATED DRAPE
UNDERBUTTOCKS DRAPE
1413
HAND SANITIZER
1414
1412
1411
ALOETOUCH 3G STRETCH VINYL GLOVES
CLOSED SYSTEM
700
1204
701
STERILE WATER
LUBRICATING JELLY
SPECIMEN CONTAINER
703
SWABSTICKS
1408
SECUREMENT DEVICE
1409
FOLEY INSERTAG
702
1410
FOLEY CATHETER AND DRAINAGE BAG
Patents Pending
1405
CONTENTS:
Tray • CSR Wrap • Underbuttocks Drape • Hand Sanitizer • Aloetouch 3G Stretch Vinyl Gloves • Fenestrated Drape • 10ml Syringe (with Sterile Water) • Lubricating Jelly • Silver touch 100% Silicone Catheter, 16Fr 10ml • Drainage Bag with Anti-Reflux Device • Povidone Iodine Swabsticks (3/pk) DIN 02076101 • Securement Device • Foley InserTag • Specimen Container
STERILE EO
Sterile in unopened, undamaged package.
Contents of foil packets have not been terminally sterilized.
Do not resterilize.
Rx Single Use Only
1407
1406
TURN PAGE FOR STEP-BY-STEP GUIDE, TIPS, & PATIENT EDUCATION

FIG. 14

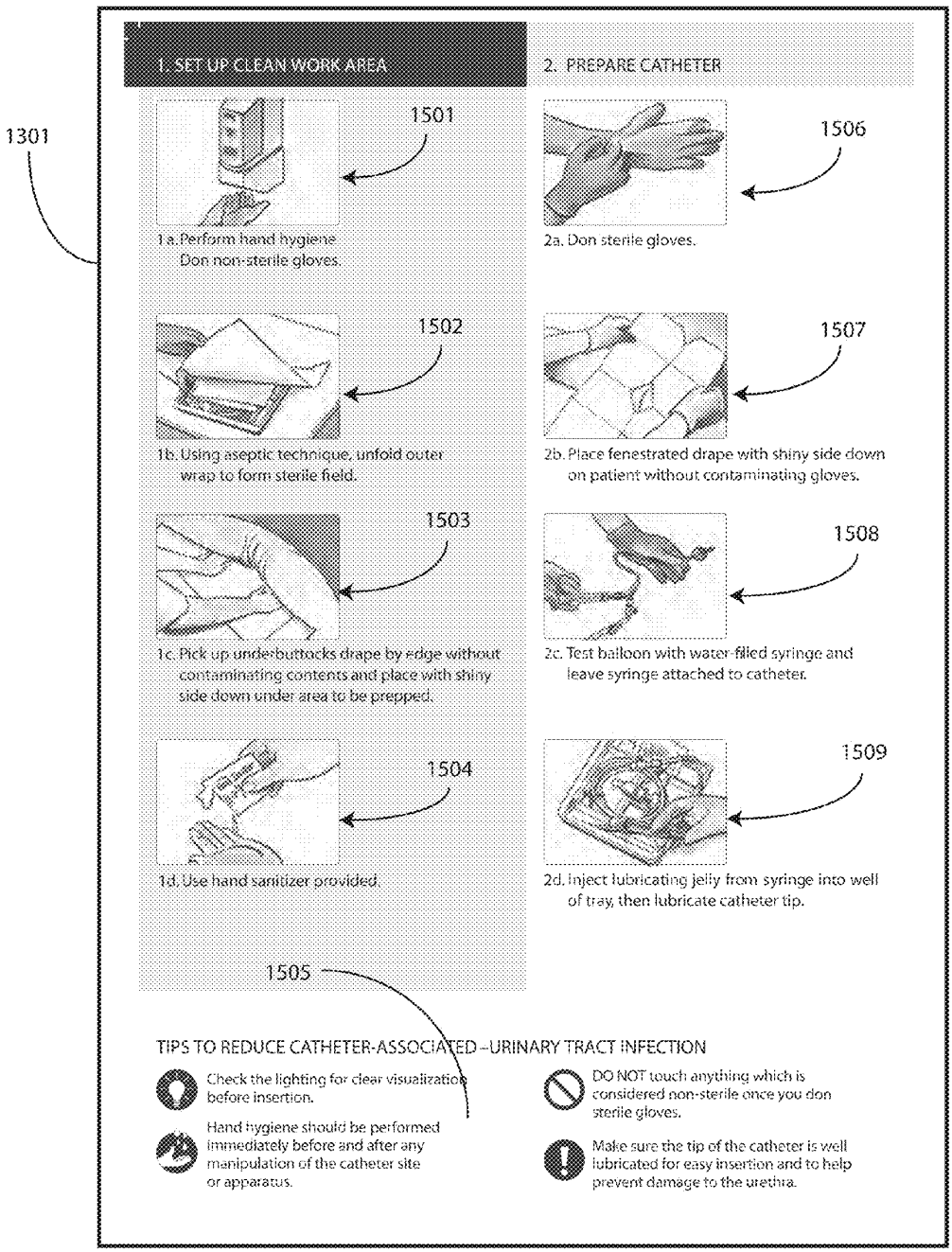
1. SET UP CLEAN WORK AREA
2. PREPARE CATHETER
1301
1501
1a. Perform hand hygiene
Don non-sterile gloves.
1502
1b. Using aseptic technique, unfold outer wrap to form sterile field.
1503
1c. Pick up under-buttocks drape by edge without contaminating contents and place with shiny side down under area to be prepped.
1504
1d. Use hand sanitizer provided.
1505
1506
2a. Don sterile gloves.
1507
2b. Place fenestrated drape with shiny side down on patient without contaminating gloves.
1508
2c. Test balloon with water-filled syringe and leave syringe attached to catheter.
1509
2d. Inject lubricating jelly from syringe into well of tray, then lubricate catheter tip.
TIPS TO REDUCE CATHETER-ASSOCIATED –URINARY TRACT INFECTION
Check the lighting for clear visualization before insertion.
Hand hygiene should be performed immediately before and after any manipulation of the catheter site or apparatus.
DO NOT touch anything which is considered non-sterile once you don sterile gloves.
Make sure the tip of the catheter is well lubricated for easy insertion and to help prevent damage to the urethra.

FIG. 15