US006343536B1

(12) **United States Patent**
Rossier et al.

(10) **Patent No.: US 6,343,536 B1**
(45) **Date of Patent: Feb. 5, 2002**

(54) **AUTOMATED PROJECTILE FIRING WEAPON AND RELATED METHOD**

(75) Inventors: **Glenn E. Rossier**, Ferrisburg; **Larry W. Hayes**, South Burlington; **David L. Steimke**, Burlington; **Victor Forrester**, Williston, all of VT (US)

(73) Assignee: **General Dynamics Armament Systems**, Burlington, VT (US)

(*) Notice: Subject to any disclaimer, the term of this patent is extended or adjusted under 35 U.S.C. 154(b) by 0 days.

(21) Appl. No.: **09/441,195**

(22) Filed: **Nov. 16, 1999**

(51) **Int. Cl.**[7] **F41A 19/02**

(52) **U.S. Cl.** **89/161**; 89/162; 89/177; 89/178; 89/129.01

(58) **Field of Search** 89/161, 162, 177, 89/178, 129.01, 9; 42/1.06

(56) **References Cited**

U.S. PATENT DOCUMENTS

2,212,687	A		8/1940	Hughes	89/162
3,969,982	A		7/1976	Pier-Amory et al.	89/162
4,024,792	A		5/1977	Möller	89/162
4,072,082	A		2/1978	Bates et al.	89/162
4,391,180	A		7/1983	Koine	89/162
5,014,595	A	*	5/1991	Ducolon, Jr.	89/178
5,123,329	A	*	6/1992	Irwin	89/161
5,138,931	A	*	8/1992	Brookshire	89/161
5,585,590	A	*	12/1996	Ducolon	89/162

OTHER PUBLICATIONS

SacoDefense, Incorporated, Striker 40mm, Advanced Lightweight Grenade Launcher (ALGL), Product Description.
Recoilless Trap, Product Description and Specifications.

* cited by examiner

Primary Examiner—J. Woodrow Eldred
(74) *Attorney, Agent, or Firm*—Finnegan, Henderson, Farabow, Garrett & Dunner L.L.P.

(57) **ABSTRACT**

An automatic projectile firing weapon and a related method for absorbing the recoil force of an automatic projectile firing weapon are disclosed. The weapon includes a barrel assembly that is slidably mounted in a receiver, biased by an operating spring, and engageable with a main sear. A gas operated bolt assembly is slidably mounted within the barrel assembly and is driven by a bolt spring. A trigger is provided to release the main sear and allow the operating spring to move the barrel assembly forwardly in the receiver. There is further provided a buffer connected between the receiver and the barrel assembly to dampen the velocity of the barrel assembly to ensure the barrel assembly is moving at a predetermined maximum velocity when a round is fired at a predetermined firing position. The recoil energy from the fired round is absorbed mainly by the forward motion of the barrel assembly and in part by the operating spring and buffer. In this manner, the peak recoil load to the receiver is minimized and the weapon operates at its actual firing rate from the first shot.

26 Claims, 17 Drawing Sheets

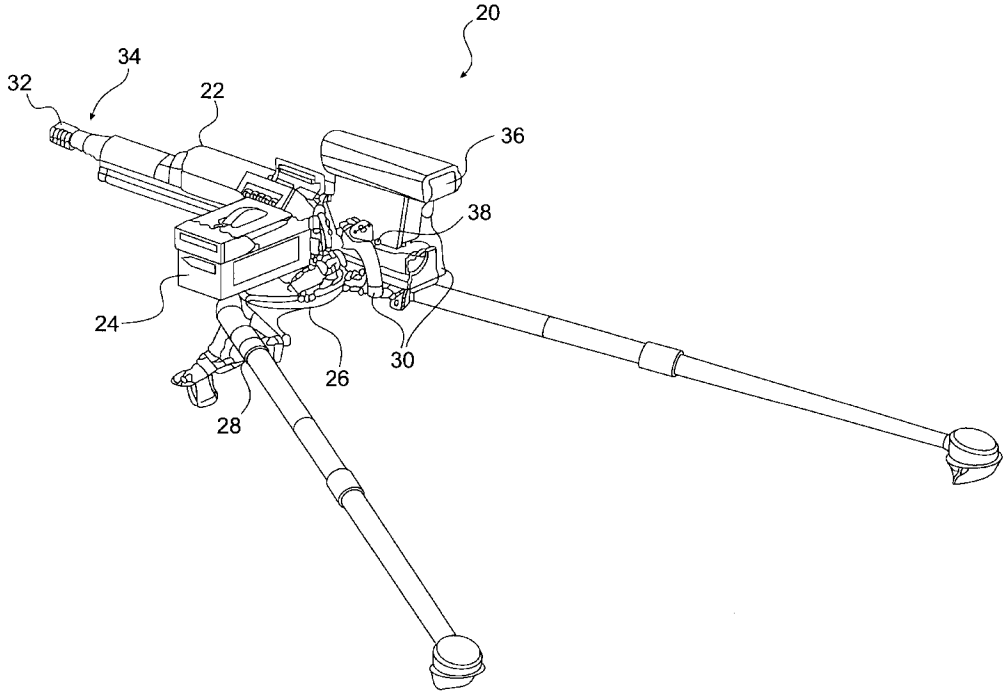

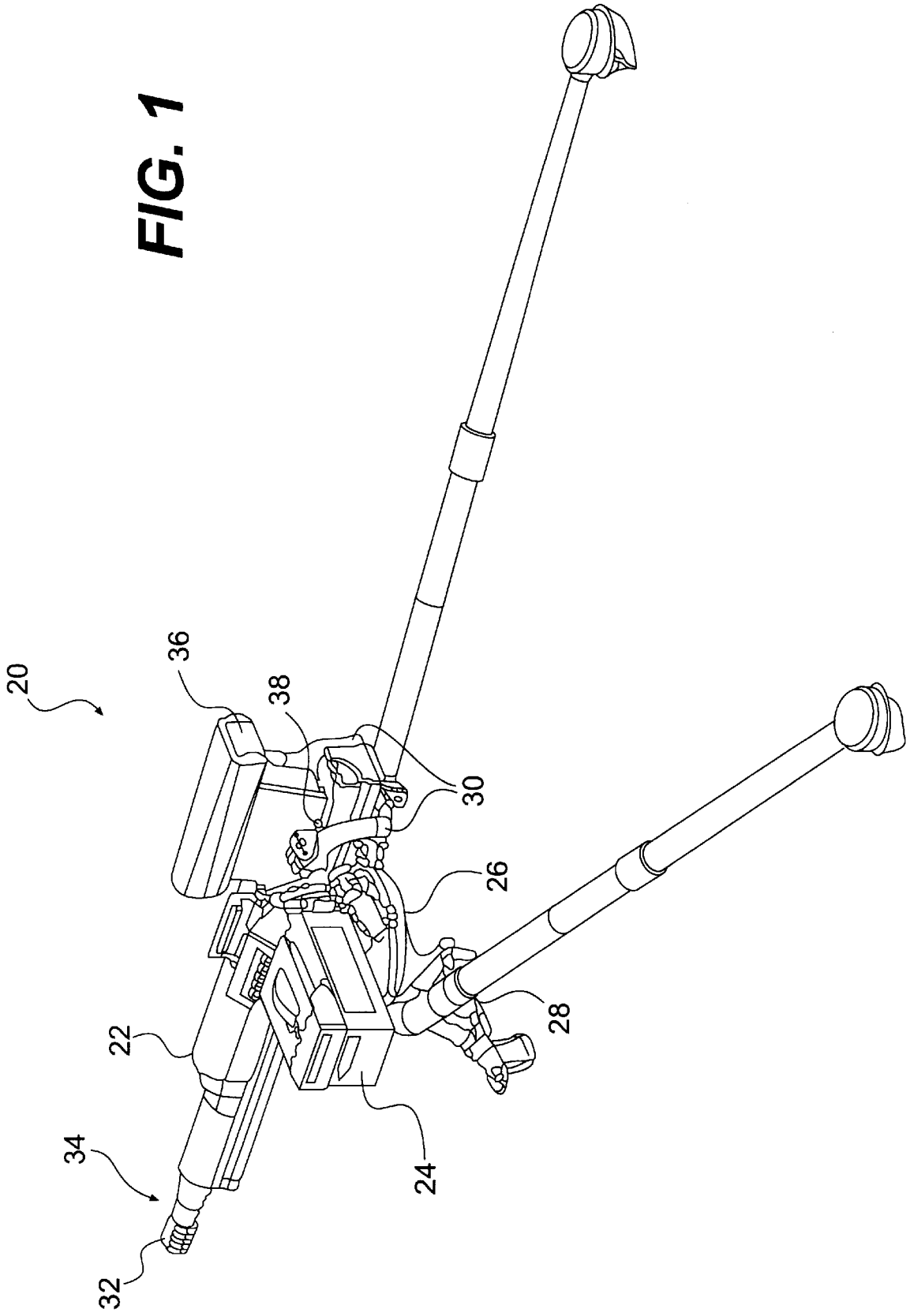

FIG. 1

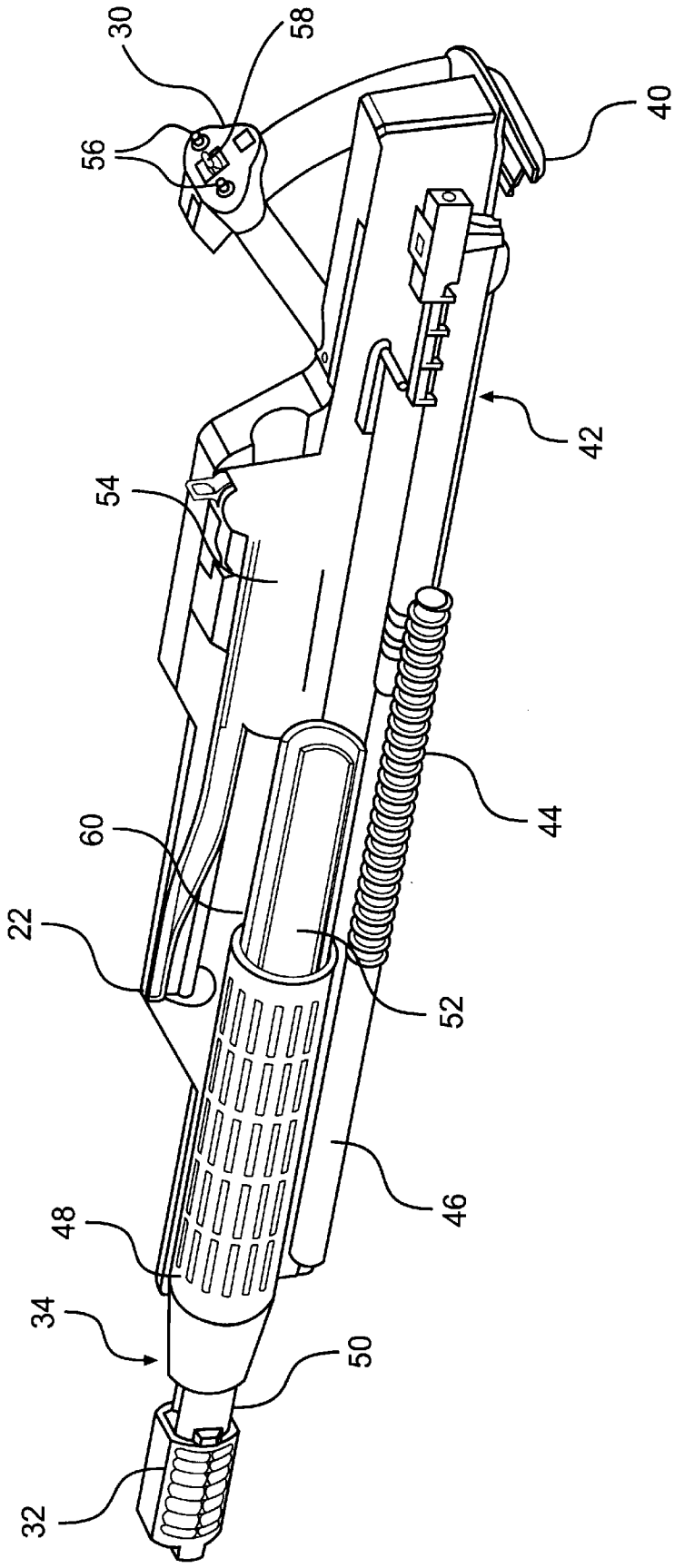

FIG. 2

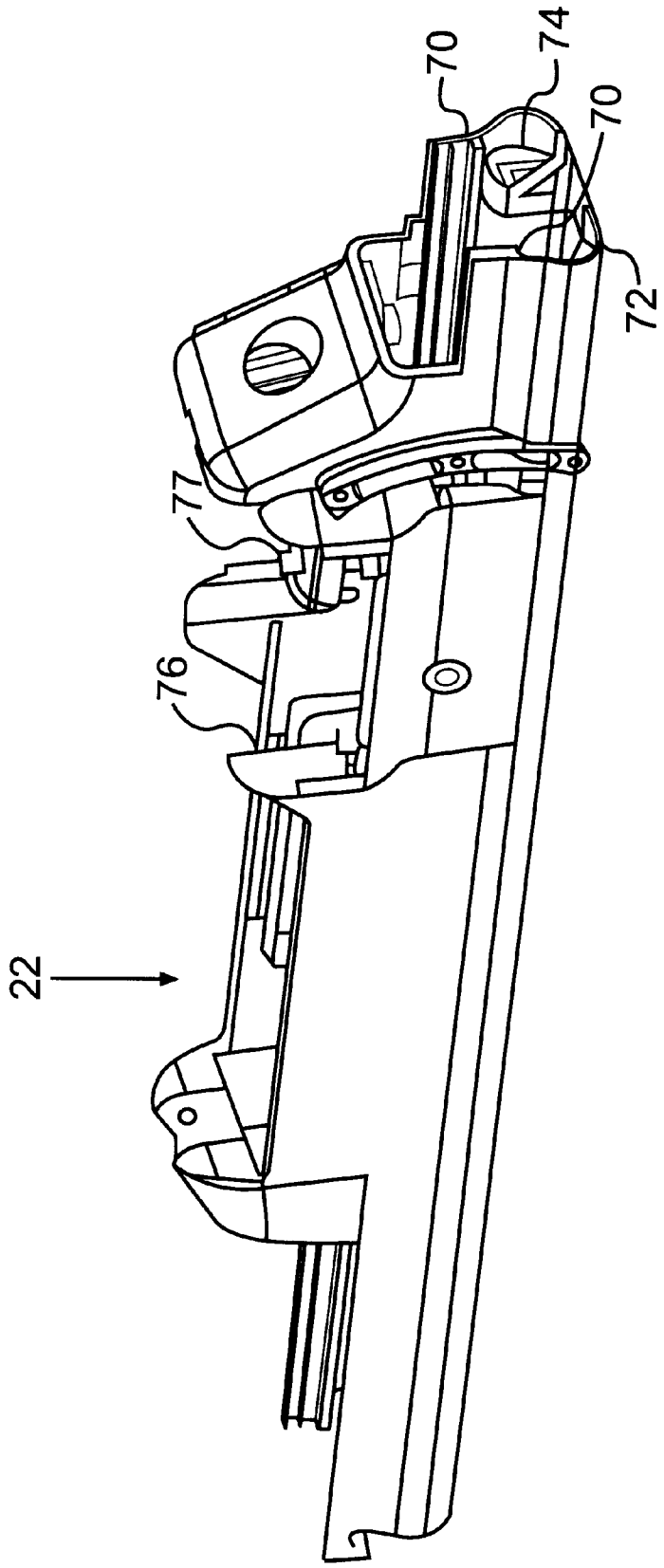

FIG. 3

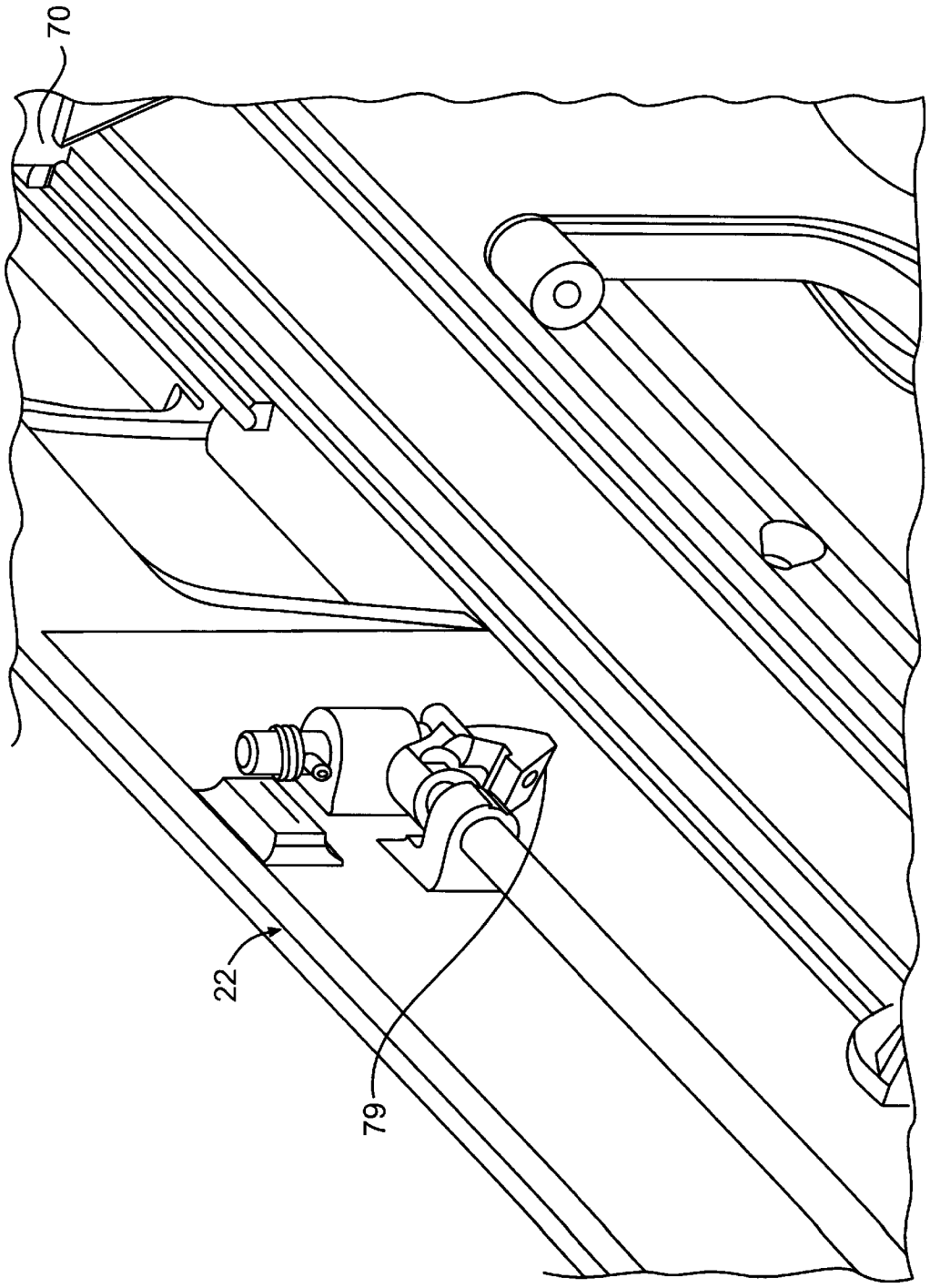

FIG. 3A

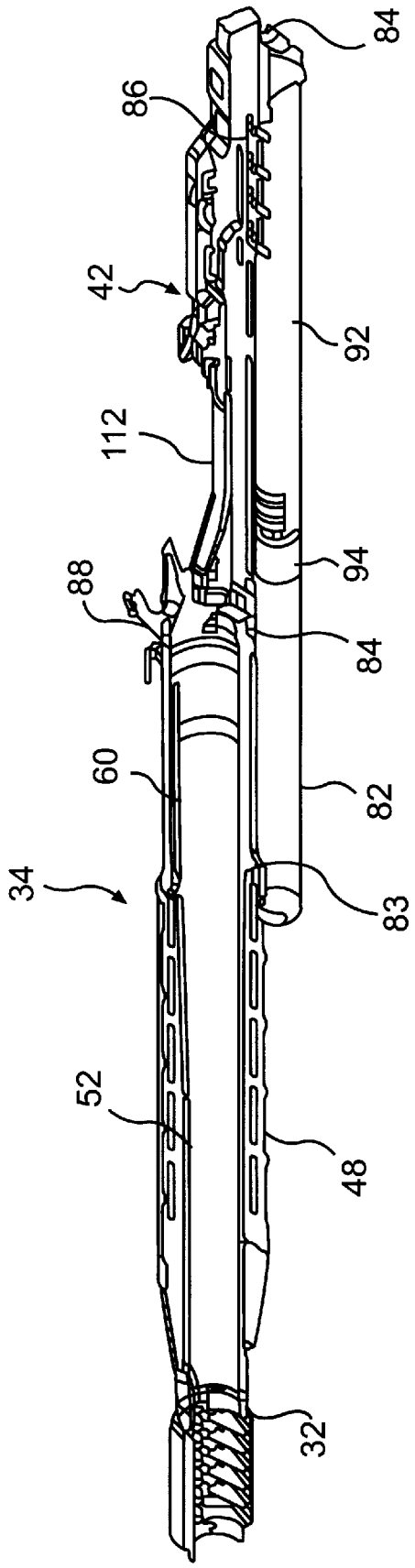

FIG. 4

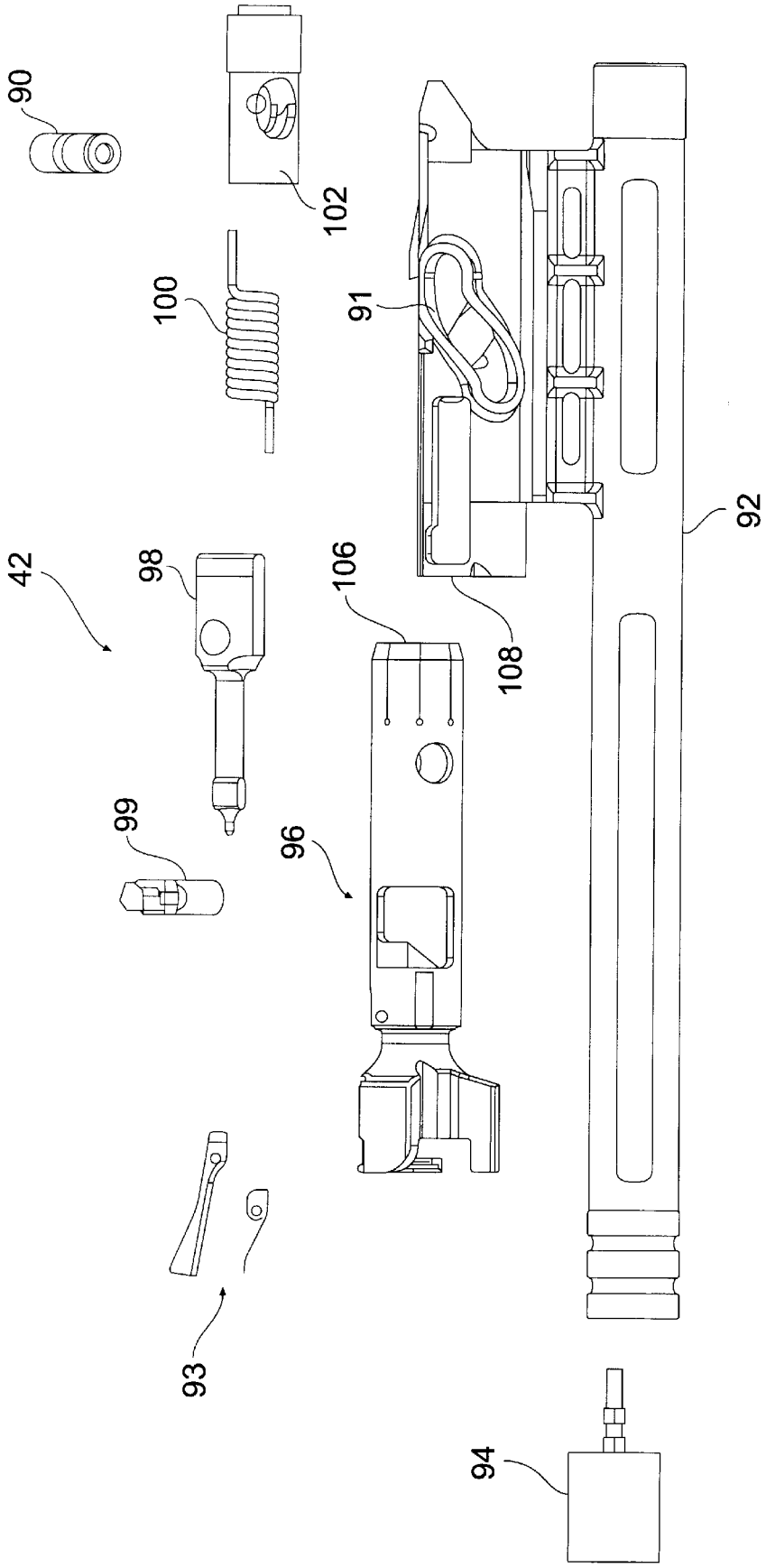

FIG. 5

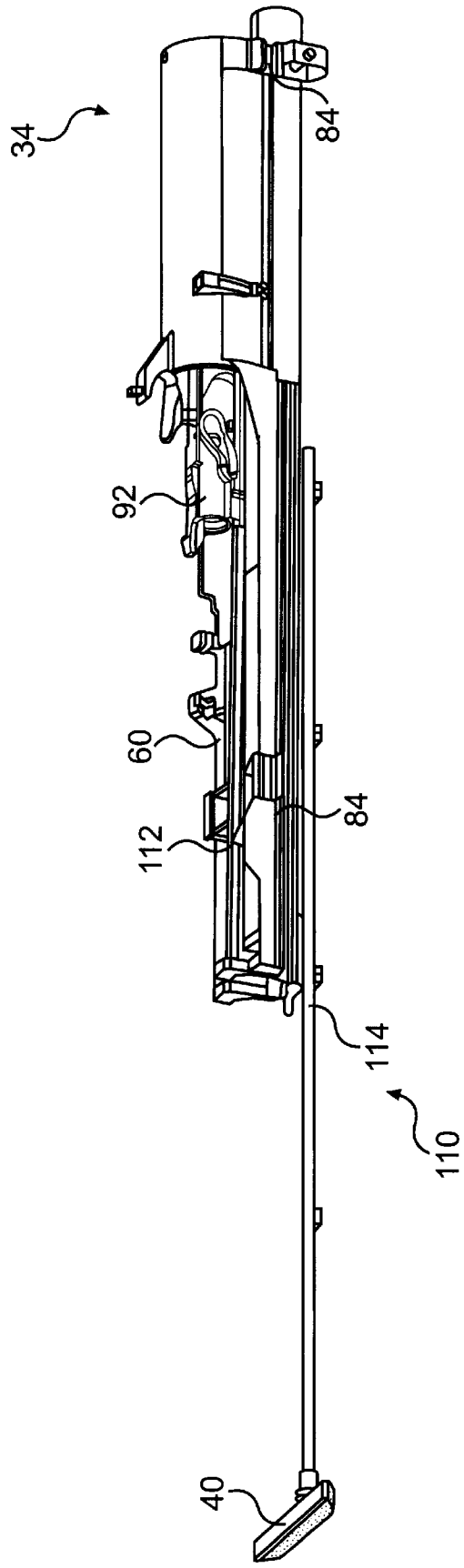

FIG. 6

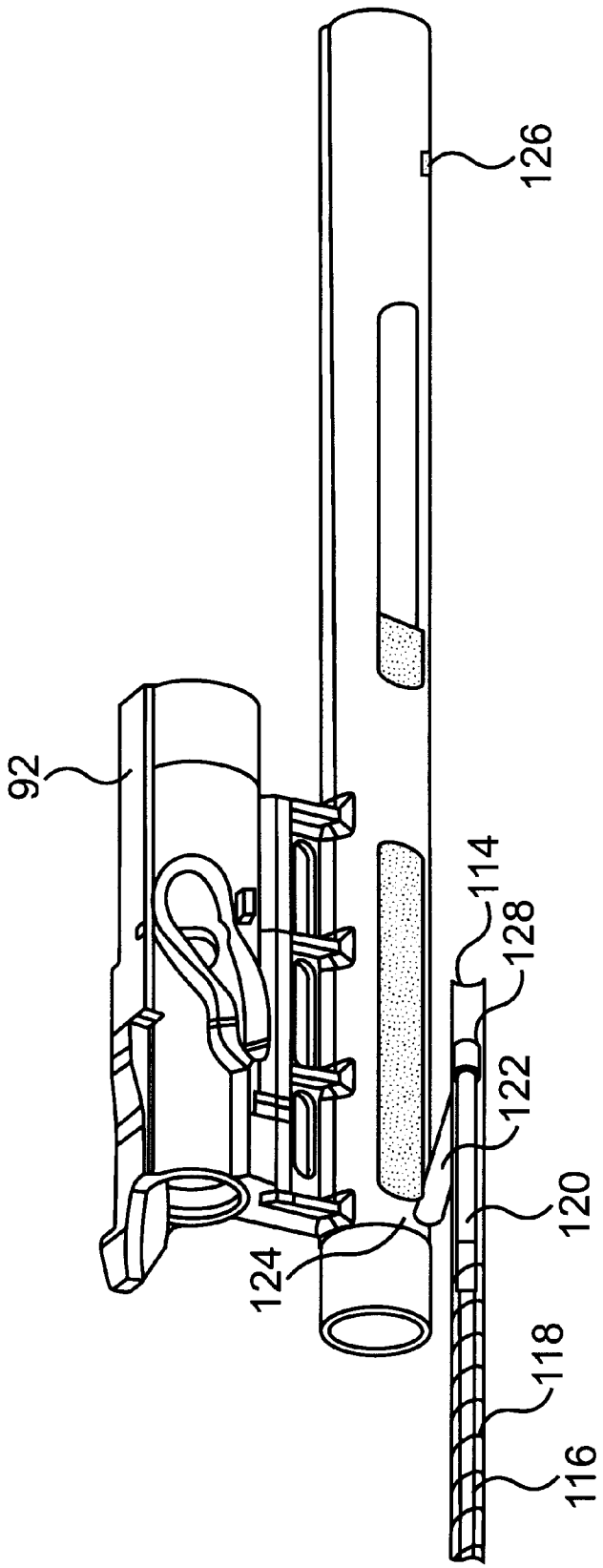

FIG. 7

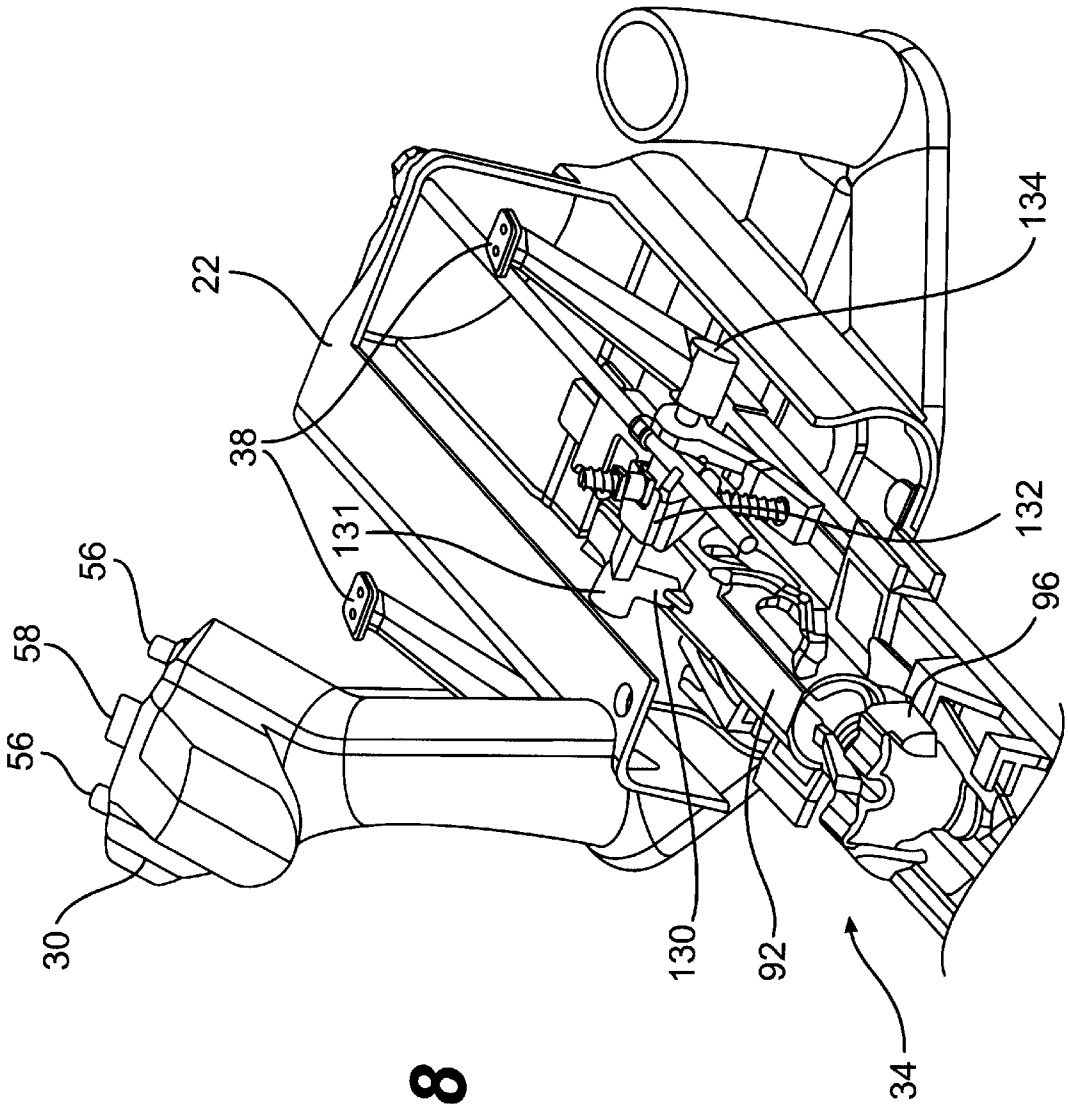

FIG. 8

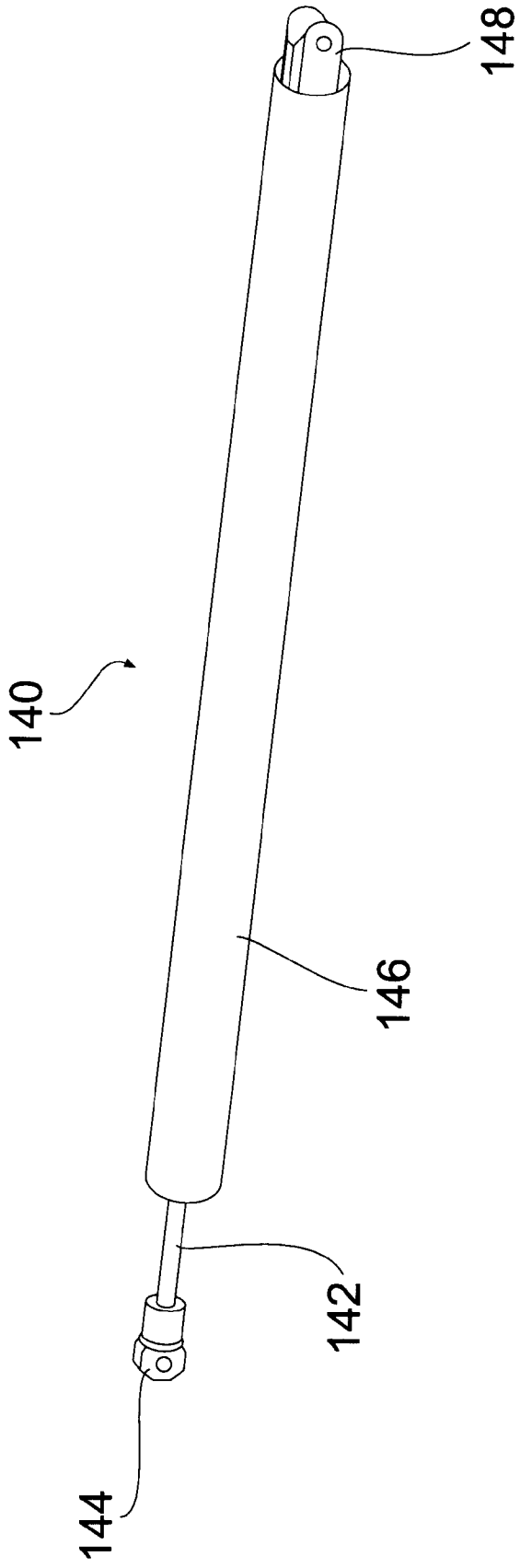

FIG. 9

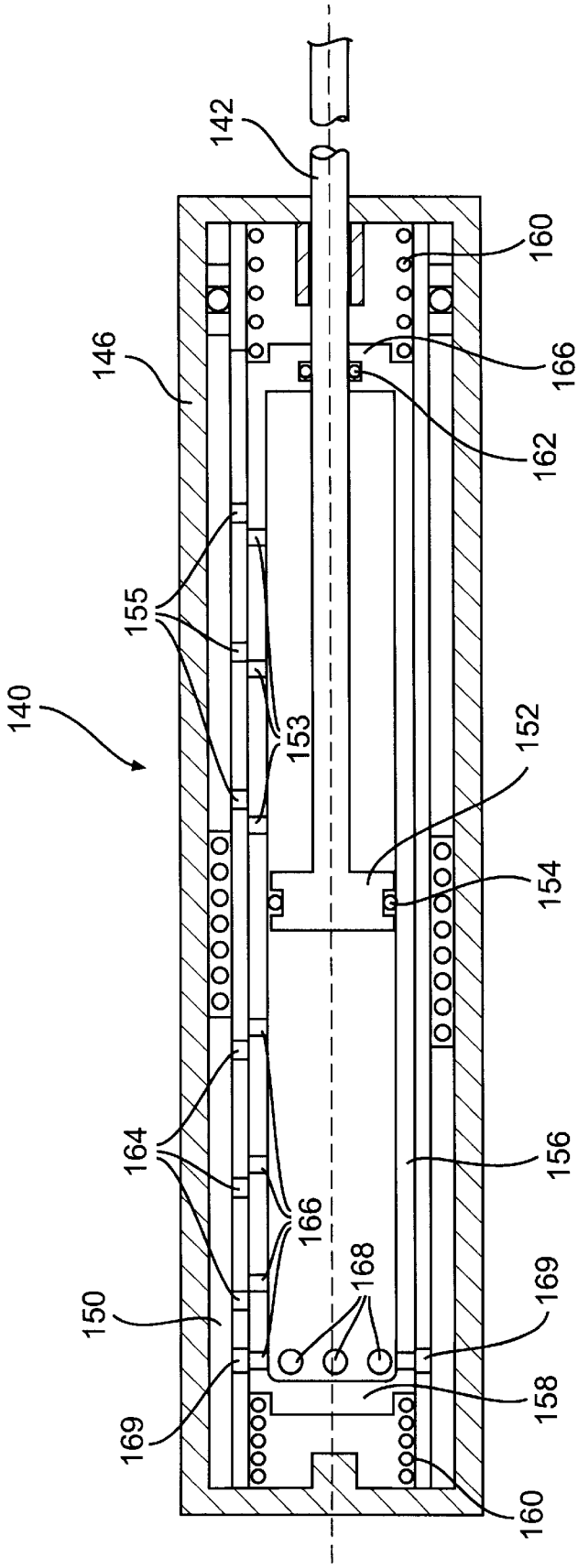

FIG. 10

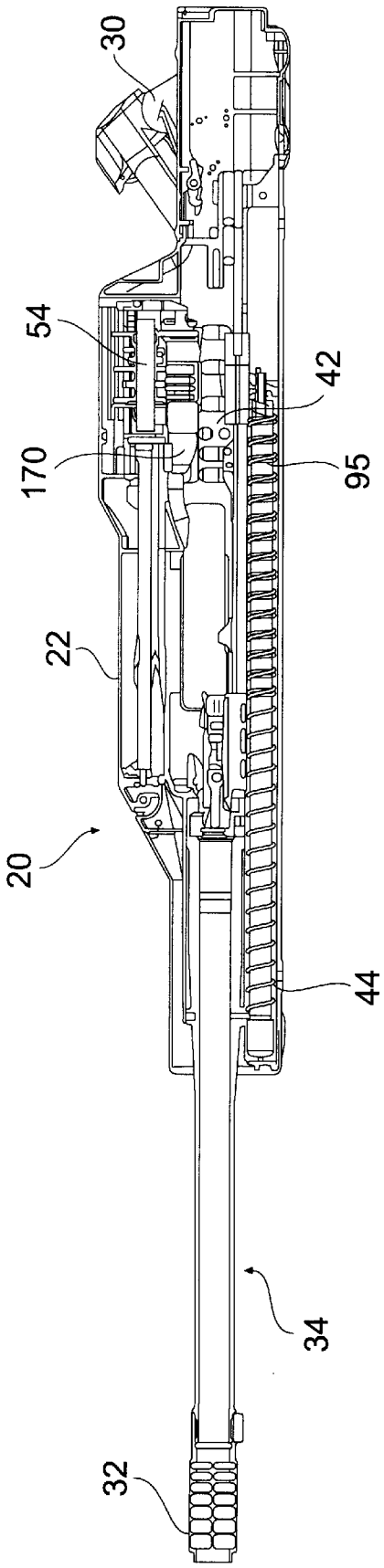

FIG. 11

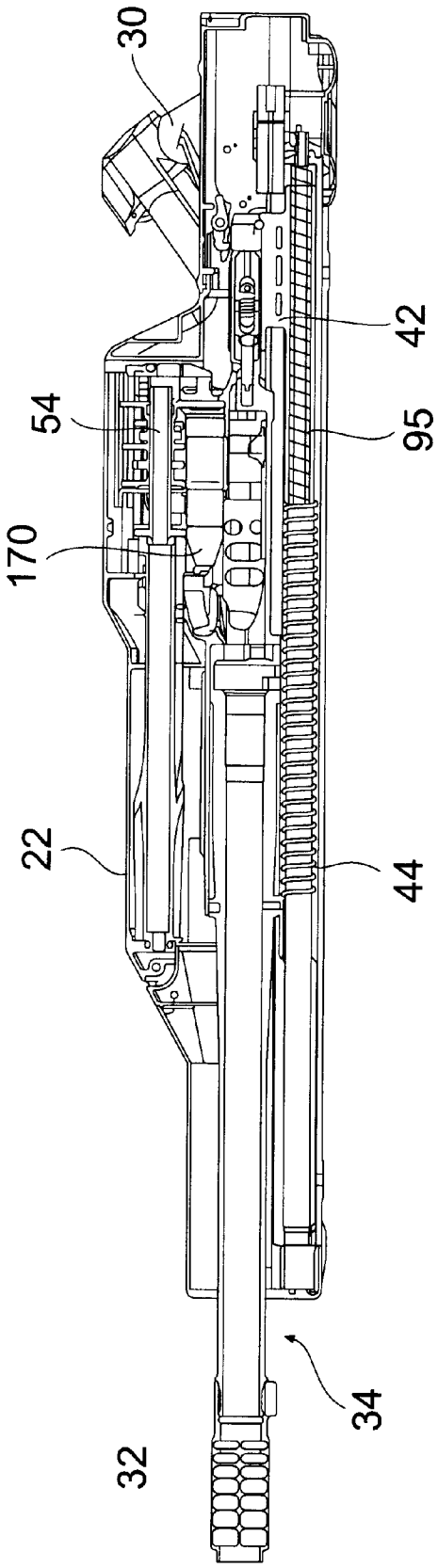

FIG. 12

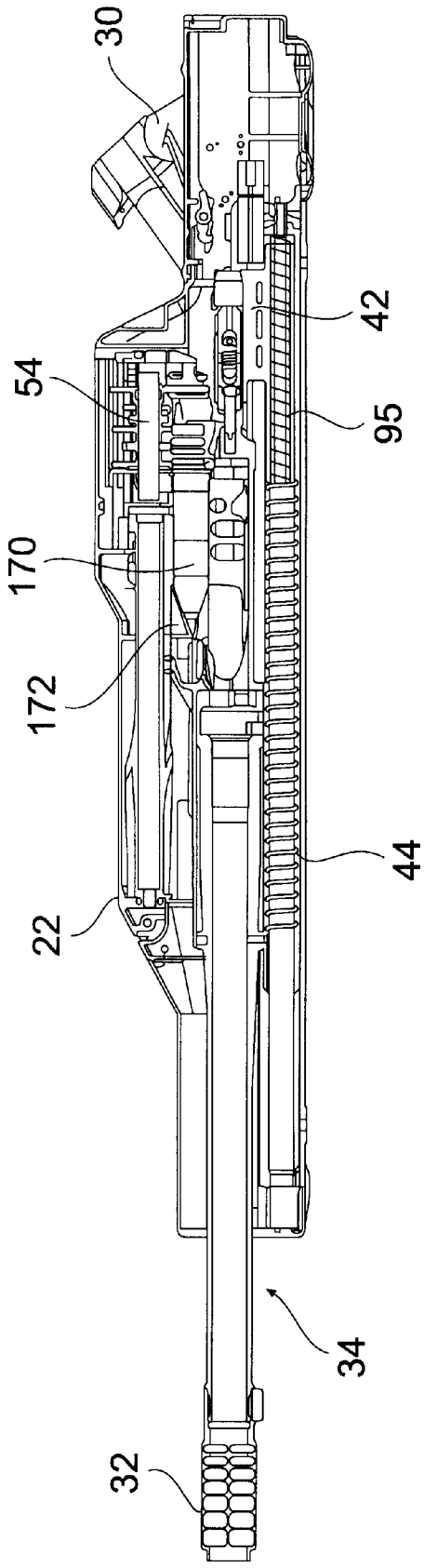

FIG. 13

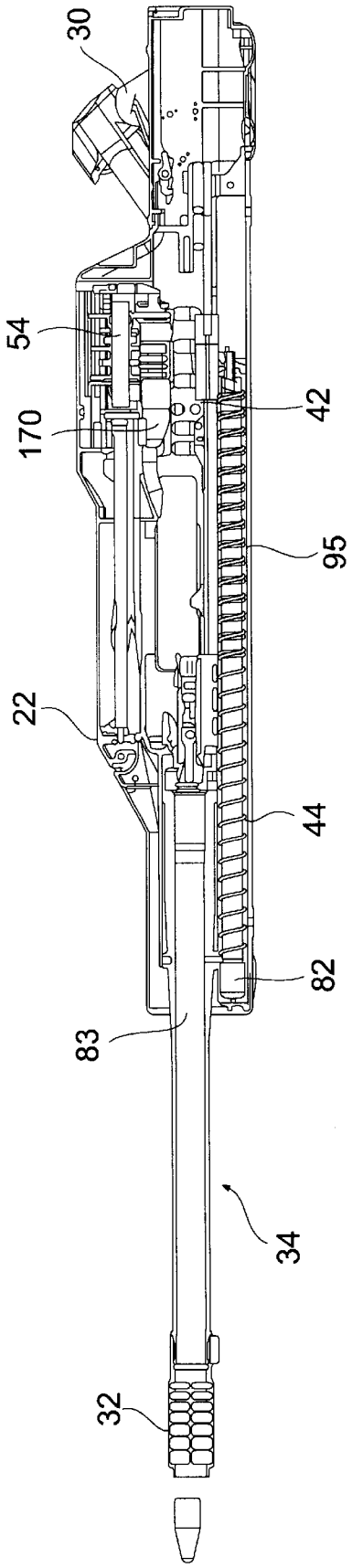

FIG. 14

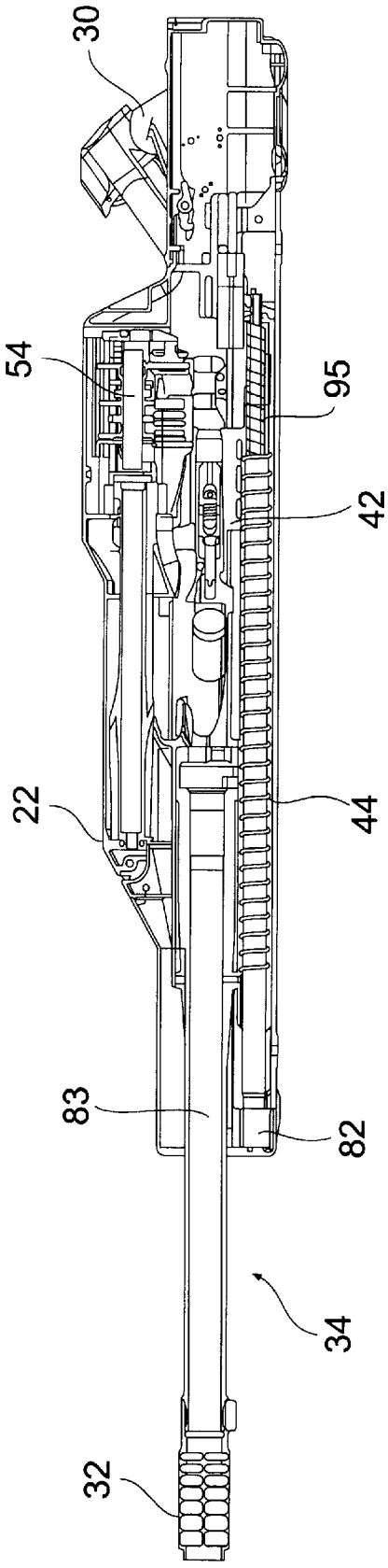

FIG. 15

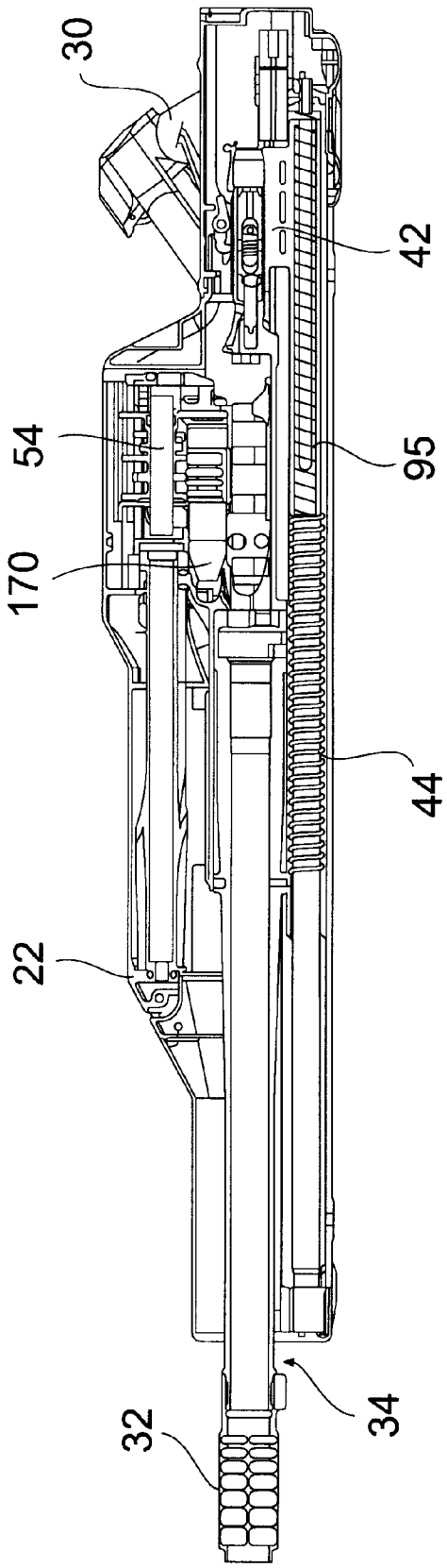

FIG. 16

AUTOMATED PROJECTILE FIRING WEAPON AND RELATED METHOD

BACKGROUND OF THE INVENTION

The present invention relates generally to automatic projectile firing weapons. More particularly, the invention relates to a method and apparatus for absorbing the recoil force of an automatic projectile firing weapon.

In many combat situations, a lightweight, easily portable automatic weapon that is capable of accurately firing a projectile over a significant distance would provide a decisive tactical advantage. There are many existing small and medium caliber automatic weapons that are specifically designed to fill particular combat needs. However, weapons that are effective at ranges of up to 2,000 meters, for example the 0.50 caliber M2 heavy machine gun and the 40 mm Mk-19 grenade, are too bulky and heavy to be easily portable. Other automatic weapons, like the 7.62mm M60/M240 medium machine guns and the 5.56 mm M249 squad automatic weapon, are easily portable but are not effective at long ranges.

The accuracy of a weapon at a long range is dependent upon the ability of the weapon to manage the recoil force of the fired projectile. The magnitude of the recoil force is a function of the mass and velocity of the projectile which directly effects the expected travel distance (range) of the fired projectile. As the expected range of the weapon increases, so does the magnitude of the recoil force. Weapons designed to fire projectiles over a significant distance typically have a greater weight than weapons designed to fire projectiles over a shorter range. The greater weight is necessary to restrain the more energetic cartridges, absorb the increased recoil force, and prevent the recoil force from disrupting the accuracy of the weapon.

To reduce the weight of a weapon that is accurate over a significant range, an improved method of handling the recoil force must be found. Many attempts have been made to manage the recoil force beyond the typical short recoil cycle or gas operated bolt cycle. In some designs, a counterweight is attached to the recoiling mass of the weapon to absorb the recoil energy. In other designs, a spring is used to absorb and store the recoil force. The energy stored in the spring or counterweight can then be used to move the recoiling mass forward when the next projectile is fired. The forward momentum of the counter-recoiling mass will partially absorb the recoil force of the next projectile.

However, these designs fail to account for the recoil force resulting from the first projectile. Because the first projectile is fired when the weapon is in a resting state, the only resistance to the initial recoil force is the spring or counterweight. This results in a higher load on the recoil system when the first projectile is fired as compared to subsequent shots. In a tripod mounted weapon, this higher load lifts the front leg of the tripod higher off the ground, which will disrupt the accuracy of at least the first few projectiles of a burst. The higher load also causes instability in the gun/mount system, which may only be corrected by increasing the amount of ballast in the system.

After a transient period, the weapon and mount will overcome the recoil overload and achieve a steady state dynamic recoil action. If the weapon is flexibly mounted, it is likely the weapon will not become accurate and effective until the transient period is passed and the weapon enters this steady state recoil action. However, during the transient period, several projectiles are wasted before the weapon settles into the steady state recoil action. Furthermore, due to mount flexibility, a steady state recoil action can have significant effects on accuracy.

In light of the foregoing there is a need for an automatic weapon that minimizes the effect of the recoil force of both the initially fired rounds and all subsequent rounds.

SUMMARY OF THE INVENTION

Accordingly, the present invention is directed to an automatic projectile firing weapon that obviates one or more of the limitations and disadvantages of prior art automatic projectile firing weapons. The advantages and purposes of the invention will be set forth in part in the description which follows, and in part will be obvious from the description, or may be learned by practice of the invention. The advantages and purposes of the invention will be realized and attained by the elements and combinations particularly pointed out in the appended claims.

To attain the advantages and in accordance with the purposes of the invention, as embodied and broadly described herein, the invention is directed to an automatic projectile firing weapon. The weapon includes a receiver that has a main sear and a trackway. A barrel assembly is slidably mounted in the trackway and is moveable between a rearward position and a forward position. The barrel assembly is engageable with the main sear at the rearward position. A firing position is located between the rearward position and the forward position and preferably closer to the forward position. There is provided an operating spring connected between the receiver and the barrel assembly. The operating spring biases the barrel assembly towards the forward position. There is also provided a manual retracting device that moves the barrel assembly rearwardly into engagement with the main sear, thereby compressing the operating spring. A trigger is provided to release the main sear and allow the operating spring to move the barrel assembly forwardly along the trackway of the receiver. There is further provided a buffer connected between the receiver and the barrel assembly to dampen the velocity of the barrel assembly to prevent the barrel assembly from exceeding a predetermined maximum velocity when a round is fired. The recoil energy from the fired round is absorbed in part by the forward motion of the barrel assembly and in part by the operating spring. The recoil force felt by the receiver is that of the operating spring and, in part, the buffer.

In another aspect, the invention is directed to a method of absorbing the recoil force of a projectile firing weapon. The weapon includes a barrel assembly slidably mounted in a receiver and an operating spring connected between the receiver and the barrel assembly. The method involves compressing the operating spring by retracting the barrel assembly within the receiver to engage the barrel assembly with a main sear when the operating spring is fully compressed. The main sear is released to allow the operating spring to bias the barrel assembly forwardly within the receiver. A round is chambered as the barrel assembly moves forwardly along the trackways. The forward motion of the barrel assembly is buffered to prevent the barrel assembly from exceeding a predetermined maximum velocity. The round is fired when the barrel assembly reaches a predetermined location in the receiver. The recoil force of the fired shot reverses the motion of the barrel assembly to move the barrel assembly rearward and re-compress the operating spring. The buffer is configured to maintain a nearly constant dynamic condition of the barrel assembly during the firing and recoil portions of the operating cycle so that effects of varying friction, weapon attitude, and cartridge impulse on the weapon operating cycle are minimized.

It is to be understood that both the foregoing general description and the following detailed description are exemplary and explanatory only and are not restrictive of the invention, as claimed.

BRIEF DESCRIPTION OF THE DRAWINGS

The accompanying drawings, which are incorporated in and constitute a part of this specification, illustrate one embodiment of the invention and together with the description, serve to explain the principles of the invention. In the drawings,

FIG. **1** is a perspective view of an automatic projectile firing weapon according to the present invention;

FIG. **2** is a partial perspective cut-away view of the automatic projectile firing weapon of the present invention;

FIG. **3** is a perspective view of a receiver according to the present invention;

FIG. **3***a* is a partial perspective view of the receiver of FIG. **3**, illustrating a cocking lever trip;

FIG. **4** is a perspective cut-away view of a barrel assembly according to the present invention;

FIG. **5** is an exploded view of a bolt assembly of the automatic projectile firing weapon of the present invention;

FIG. **6** is a perspective view of a retracting device and a rear portion of the barrel assembly and the bolt carriage according to the present invention;

FIG. **7** is a perspective view of the retracting device and bolt carriage of FIG. **6**;

FIG. **8** is a perspective cut-away view of the rear portion of the weapon of the present invention, illustrating the engagement of the barrel assembly with the main sear;

FIG. **9** is a perspective view of a buffer according to the present invention;

FIG. **10** is a cross-sectional view of the buffer of FIG. **9**;

FIG. **11** is a side cross-sectional view of the weapon of the present invention, illustrating the pre-charged state where the operating spring and bolt springs are expanded;

FIG. **12** is a side cross-sectional view of the weapon of the present invention, illustrating the charged state where the operating spring and bolt spring are compressed;

FIG. **13** is a side cross-sectional view of the weapon of the present invention, illustrating the expansion of the operating spring and a round being stripped and rammed;

FIG. **14** is a side cross-sectional view of the weapon of the present invention, illustrating the firing position;

FIG. **15** is a side cross-sectional view of the weapon of the present invention, illustrating the mid-recoil position of the barrel assembly; and

FIG. **16** a side cross-sectional view of the weapon of the present invention, illustrating the maximum recoil position of the barrel assembly.

DETAILED DESCRIPTION

Reference will now be made in detail to a preferred embodiment of the invention, an example of which is illustrated in the accompanying drawings. Wherever possible, the same reference numbers will be used throughout the drawings to refer to the same or like parts.

In accordance with the present invention, an automatic projectile firing weapon is provided. The exemplary embodiment of the weapon of the present invention is a lightweight automatic crew served weapon for firing medium caliber munitions. The present invention contemplates, however, that the principles and methods disclosed herein are applicable to automatic weapons of all sizes. The exemplary embodiment of the automatic projectile firing weapon of the present invention is shown in FIG. **1** and is designated generally by the reference number **20**.

As illustrated in FIG. **1**, weapon **20** includes a receiver **22**, a mount **26**, and a pair of handles **30** that are attached to receiver **22**. Mount **26** allows weapon **20** to be pivoted horizontally (traverse) and vertically (elevation) to provide a full range of firing directions. Handles **30** can be manipulated to horizontally or vertically pivot the weapon about mount **26** to adjust the aim of weapon **20**.

Mount **26** connects receiver **22** to a flexible structure. In the exemplary embodiment, weapon **20** is mounted on a tripod **28**. The present invention contemplates, however, that weapon **20** may be mounted on any other flexible structure readily apparent to one skilled in the art, such as, for example, a moving vehicle.

Preferably, the weapon **20** also includes a targeting device **36**. Targeting device **36** may include direct view optics and a laser targeting system or any other range finding instrument readily apparent to one skilled in the art. In addition, targeting device **36** may also include a display screen to display information from the laser targeting system or other information regarding firing status of the weapon. As illustrated in FIG. **2**, each of the pair of handles **30** may include a set of buttons **56**. Buttons **56** may be used to activate the laser targeting system or perform any standard operating function of targeting device **36**.

In accordance with the present invention, the weapon includes a barrel assembly that is slidably mounted within the receiver. The barrel assembly is moveable between a rearward position and a forward position and has a firing position between the rearward and forward positions. An operating spring is connected between the receiver and the barrel assembly. The operating spring biases the barrel assembly forwardly within the receiver. In the disclosed embodiment, the barrel assembly is slidably mounted on a trackway in the receiver. The present invention contemplates that other types of mountings will be readily apparent to one skilled in the art.

As embodied herein and illustrated in FIG. **1**, weapon **20** includes a receiver **22**. A barrel assembly **34** is contained within the receiver **22**. As illustrated in FIG. **2**, an operating spring **44** is disposed on a guide **46**. Operating spring **44** is connected between receiver **22** and barrel assembly **34** so that a rearward movement of barrel assembly **34** operates to compress operating spring **44**. A buffer (not shown) is also connected between the barrel assembly **34** and the receiver **22**.

As illustrated in FIG. **3**, receiver **22** includes an operating spring compartment **72**, a buffer compartment **74**, and tracks **70**. Operating spring **44** and guide **46** are positioned within operating spring compartment **72** of receiver **22**. Barrel assembly **34** includes trackways **84** (referring to FIG. **6**) that correspond to and engage tracks **70**. This engagement is configured to allow barrel assembly **34** to slide within receiver **22** between a forward and a rearward position.

As illustrated in FIG. **3**, receiver **22** also includes an ammunition feed opening **76**, **77** on either side of weapon **20**. In the preferred embodiment, an ammunition can **24** (referring to FIG. **1**) is mounted, on either side of the weapon, adjacent either ammunition feed opening **76**, **77** on receiver **22** to provide ammunition to weapon **20**. Ammunition can **24** is positioned external to receiver **22**, on either side of the weapon, to allow easy removal and replacement during operation of the weapon.

The ammunition may be fed to the weapon by any means readily apparent to one skilled in the art. In the embodiment illustrated in FIG. **2**, an ammunition feed sprocket **54** is provided within receiver **22** to advance the ammunition through the weapon. Feed sprocket **54** moves the ammunition from ammunition can **24** to a strip position adjacent and above the barrel assembly **34**.

As illustrated in FIG. **3***a*, receiver **22** also includes a cocking lever trip **79**. Cocking lever trip **79** is located in a fixed position toward the front end of receiver **22** along tracks **70**.

As illustrated in FIG. **4**, barrel assembly **34** includes a barrel **52**, a barrel extension **60** and a bolt assembly **42**. Barrel **52** includes a chamber **88** and breech locking lugs **89**. Barrel extension **60** extends rearward from barrel **52** and defines a track **112**. Bolt assembly **42** is slidably positioned in track **112**. Preferably, the sliding motion of bolt assembly **42** is limited on the forward end by chamber **88** and on the rearward end by a bolt bumper **86**.

As illustrated in FIG. **5**, bolt assembly **42** includes a bolt carriage **92**, a gas shutoff valve **94**, a bolt body **96**, and a bolt spring (not shown) disposed within bolt carriage **92**. As illustrated in FIG. **4**, bolt carriage **92** is slidably disposed within a gas cylinder **82** of barrel assembly **34**. In this embodiment, the gas cylinder **82** is an integral part of barrel extension **60**. The bolt spring acts on bolt carriage **92** to move bolt carriage **92** forwardly within track **112** and gas cylinder **82** of barrel extension **60**. Bolt assembly is engageable with a bolt sear (not shown) to hold the bolt assembly rearward and hold the bolt spring in a compressed condition.

Referring again to FIG. **5**, bolt carriage **92** includes an opening **108** to receive bolt body **96** that includes a spring operated rammer **93**. Rammer **93** strips a round of ammunition from the ammunition feed belt and feed sprocket **54** as operating spring **44** (referring to FIG. **2**) urges barrel assembly **34** forwardly within barrel extension **60**. The bolt spring urges bolt assembly **42** forwardly until the stripped round is rammed and locked into chamber **88**.

The bolt **96** is stopped when the round is chambered. The bolt carriage **92**, however, will continue forward, urged by the bolt spring. Bolt assembly **42** includes a cam pin **90** that engages bolt body **96** and a cam surface **91** in bolt carriage **92**. As bolt carriage **92** moves forward, cam pin **90** rides along cam surface **91** to convert the linear motion of bolt carriage **92** into a rotary motion of bolt body **96**, to engage the bolt body lugs with barrel lugs **89** (referring to FIG. **4**). A carriage buffer **102** removes any excess energy of the bolt carriage.

As shown in FIG. **5**, bolt body **96** includes an internal opening **106**, which houses a firing pin **98**, a firing spring **100**, and a spring seat/carriage buffer **102**. The final portion of bolt ram is utilized to charge firing spring **100** into cocked position. Firing spring **100** is released when cocking lever **99** contacts cocking lever trip **79** (referring to FIG. **3***a*) mounted in the receiver **22**. Firing spring **100** urges firing pin **98** into contact with the round. The force of the contact between firing pin **98** and the percussion primer causes the cartridge to fire. Propellant gas from the fired round is directed into gas cylinder **82** through gas port **83** (referring to FIG. **4**). The propellant gas contacts the gas piston of carriage and gas shutoff valve **94** and causes bolt assembly **42** to move rearwardly in track **112**.

Preferably, a muzzle device **32** is affixed to the muzzle end of barrel **52**. Muzzle device **32** may house muzzle velocity correction components. Muzzle device **32** also operates to shield muzzle gas, hide muzzle flash, and act as a muzzle brake, which reduces net impulse delivered to the weapon.

In accordance with the present invention, a manual retracting device is provided. The retracting device is configured to engage the barrel assembly, prior to firing, to move the bolt assembly rearwardly into engagement with the bolt sear and to move the barrel assembly rearwardly within the receiver and into engagement with the main sear. In the exemplary embodiment, the retracting device includes a pawl that is engageable with the bolt assembly to retract the barrel assembly. It is contemplated that alternative devices for retracting the barrel assembly will be readily apparent to one skilled in the art.

As illustrated in FIG. **6**, a manual retracting device **110** is positioned alongside the rear portion of barrel assembly **34**. Retracting device **110** includes a handle **40** and a guide tube **114**. Handle **40** is connected to a cable **116** that is disposed in guide tube **114** (referring to FIG. **7**).

As shown in FIG. **7**, a pawl **122** and pawl carriage **120** are connected to the end of cable **116** opposite handle **40**. A return spring **118** is disposed around cable **116** between handle **40** and pawl carriage **120**. Pawl **122** pivots about a pin **128** in pawl carriage **120**. Pawl **122** is spring loaded out and configured to engage a slot **124** in bolt carriage **92**.

If the weapon is uncharged and handle **40** is pulled from its stowed position, pawl **122** engages slot **124** and moves bolt carriage **92** rearwardly along track **112** in barrel extension **60**. Bolt carriage **92** moves rearwardly, compressing the bolt spring until bolt assembly **42** engages bolt bumper **56** and the bolt sear (not shown). The continuing rearward motion of handle **40** and pawl **122** then causes the entire barrel assembly **34** to move rearwardly within receiver **22**. The rearward motion of barrel assembly **34** compresses operating spring **44** and continues until barrel assembly **34** engages main sear

In the exemplary embodiment, bolt carriage has a second slot **126**. In this embodiment, the handle must be retracted twice (equivalent to two half strokes) to move the barrel assembly into engagement with the main sear. When handle **40** is released after the first half stroke, which locks the bolt assembly **42** with the bolt sear, the return spring **118** of the retracting device **110** urges pawl carriage **120** forwardly within guide tube **114**. Spring loaded pawl **122** pivots inwardly and rides along the surface of bolt carriage **92** until pawl **122** reaches second slot **126**. Handle **40** is then retracted a second half stroke to engage barrel assembly **34** with main sear **130**.

As illustrated in FIG. **8**, barrel assembly **34** includes a sear lug **131** on the carriage that engages main sear **130** at the fully rearward position. Main sear **130** is mounted on a trigger shaft **134** within the back cover portion of receiver **22**. Triggers **38** are connected to trigger shaft **134**. Depressing either or both of triggers **38** causes trigger shaft **134** to rotate. The rotation of trigger shaft **134** disengages main sear **130** from barrel assembly **34** and allows operating spring **44** to move the barrel assembly forward and initiate the firing sequence.

Preferably, receiver **22** also includes a semi-automatic sear **132**. Semi-automatic sear **132** is also engageable with barrel assembly **34**. Semi-automatic sear **132** may also be mounted on trigger shaft **134** such that if the selector is in the semi-automatic mode, a depression of either or both triggers **38** will cause semi-automatic sear **132** to maintain engagement with barrel assembly **34** after the first shot. When the weapon is operating in semi-automatic mode, semi-automatic sear **132** will engage barrel assembly **34** after each round is fired, even when the trigger is depressed.

In accordance with the present invention, a buffer is connected between the receiver and the barrel assembly. The

buffer dampens the movement of the barrel assembly to prevent the barrel assembly from exceeding a predetermined maximum velocity when a round is fired. During the initial portion of the recoil stroke, the buffer maintains a nearly constant force, the magnitude of which is governed by the initial recoil velocity of the barrel assembly, through the rearward travel of the barrel assembly, thereby mitigating the recoil load. The disclosed buffer utilizes a damping fluid and shuttle valves to govern the motion of the barrel assembly, although it is contemplated that other alternatives will be readily apparent to one skilled in the art.

As illustrated in FIG. **9**, a buffer **140** is provided having a housing **146** and a piston rod **142**. A first connecting device **144** is positioned on one end of piston rod **142** and a second connecting device **148** is positioned on one end of housing **146**. Buffer **140** is positioned within a buffer compartment **74** of receiver **22** (referring to FIG. **3**). Connecting device **144** connects piston rod **142** to barrel assembly **34**. Connecting device **148** connects housing **146** to receiver **22**. Movement of barrel assembly **34** relative to receiver **22** results in a corresponding movement of piston rod **142** relative to housing **146**.

As shown in FIG. **10**, buffer **140** includes a reserve **150** of damping fluid, a stationary sleeve **156**, and a moving sleeve **158**. Stationary sleeve **156** is fixed within housing **146** and moving sleeve **158** is slidably disposed within stationary sleeve **156**. A valve spring **160** is positioned on each side of moving sleeve **158** to center moving sleeve **158** within housing **146**.

A piston **152** is connected to piston rod **142** and is slidably disposed within moving sleeve **158**. Preferably, a seal **154** is disposed around piston **152** to prevent damping fluid from flowing between piston **152** and moving sleeve **158**. In addition, a seal **162** is positioned at opening **166** in moving sleeve **158** through which piston rod **142** passes.

The stationary sleeve **156** includes a plurality of buffering orifices **164**. The moving sleeve **158** includes a corresponding plurality of buffering orifices **166** and a plurality of larger valve orifices **166**. The buffering orifices **166** on moving sleeve **158** are offset from the buffering orifices **164** on stationary sleeve **156**.

When piston **152** slides within moving sleeve **158** in response to a corresponding movement of barrel assembly **34**, piston **152** forces fluid through valve orifices **168** and **169** and into reserve **150**. Valve orifices **168** are large enough that there is little resistance to the movement of piston **152** when the piston is moving at a low velocity. However, as the velocity of piston **152** increases and the rate of flow of fluid through valve orifices **168** increases, the resistance encountered by piston **152** also increases. The increased resistance encountered by piston **152** is opposed by the force of valve spring **160** acting on moving sleeve **158**. When the piston reaches a certain velocity, the force exerted by piston **152** on moving sleeve **158** overcomes the force of valve spring **160** and causes moving sleeve **158** to slide within stationary sleeve **156**.

The movement of the moving sleeve **158** within the stationary sleeve **156** moves the valve orifices **168** and **169** out of alignment and causes buffering orifices **164** and **166** to align. Because buffering orifices **164** and **166** are smaller than valve orifices **168** and **169**, moving piston **152** encounters a greater resistance in forcing fluid through buffering orifices **164** into reserve **150**. This increased resistance on piston **152** causes a decrease in piston **152** velocity. As the velocity of piston **152** decreases so does the force exerted on moving sleeve **158**. When the velocity of piston **152** decreases below a certain velocity, the force of valve spring **160** moves moving sleeve **158** within stationary sleeve **156** to re-align valve orifices **164** and **166**. In this manner, buffer **140** operates to prevent the velocity of piston **152** and connected barrel assembly **34** from exceeding a predetermined maximum velocity.

Preferably, moving sleeve **158** and stationary sleeve **156** have a second set of buffering orifices **153** and **155**, respectively. The second set of buffering orifices are positioned such that the velocity of movement of piston **152** in the opposite direction may also be prevented from exceeding a predetermined maximum velocity. In this manner, buffer **140** can govern the velocity of movement of barrel assembly **34** in both directions.

The operation of the aforementioned device will now be described with reference to the attached drawings.

The operation of the automatic projectile weapon of the present invention begins with weapon **20** in the un-charged position as illustrated in FIG. **11**. The barrel assembly **34** is in the forward position. The operating spring **44** and bolt spring **95** are at their extended lengths and minimum preloads. The bolt assembly **42** is in its forward and locked position within the barrel extension **60**. The ready round **170** (the next round to be fired) is within the ammunition feed sprocket **54**.

The handle **40** of retracting device **110** is then pulled to charge weapon **20**. As illustrated in FIG. **12**, the charging stroke compresses bolt spring **95** and operating spring **44**. In an alternative embodiment, handle **40** is pulled twice to fully compress the bolt spring and operating spring **44** in sequence.

In the charged position, bolt assembly **42** is latched rearward within the barrel extension **60** by the bolt sear and the barrel extension **60** is latched rearward within receiver **22** by the main sear **130** (referring to FIG. **8**). Feeder sprocket **54** advances ready round **170** into the strip position in front of bolt assembly **42**. As result of the aftward motion of the barrel extension, the feed sprocket advances one pocket position. Specifically, the cam follower on top of the barrel extension, via engagement with the feed cam, causes approximately 60° rotation of the 6 tooth sprocket with a 6" stroke of barrel extension. The feed cam drives the feed sprocket via a cam pawl. The feed sprocket is retained in the indexed position with a sprocket pawl. Upon forward stroke of the barrel extension (at the beginning of the firing cycle), the feed cam rotates back **600**, which moves the cam pawl back one pocket or position. The weapon is now ready to fire.

An optional procedure for preparation of the weapon for firing is to charge the weapon as described above, but without ammunition or unloaded. With the weapon charged, the ammunition belt is introduced into the feed port and the sprocket is manually indexed to position the first cartridge at the belt strip position. This is accomplished simply by overriding the sprocket pawl.

Depressing trigger **38** releases the entire barrel assembly **34** from main sear **130**, thereby allowing operating spring **44** to move barrel assembly **34** forward within the receiver **22**. As barrel assembly **34** moves forward in receiver **22**, bolt assembly **42**, via the spring loaded rammer, strips ready round **170** from feed sprocket **54**.

Following the ammunition strip, the bolt sear releases bolt carriage **92**, allowing the bolt spring to move bolt carriage **92** forwardly within barrel assembly **34**, while the barrel assembly continues to move forward relative to receiver **22**. As illustrated in FIG. **13**, a fixed guide **172** within receiver

22 directs ready round **170** toward the centerline of barrel **52**. Round **170** is further guided into chamber **88** by fixed guides within the barrel extension **60**.

As illustrated in FIG. **14**, the full expansion of the bolt spring causes bolt assembly **42** to lock round **170** in chamber **88**. This is accomplished by the final portion of the longitudinal stroke of the carriage causing rotation of the bolt behind the chambered cartridge. The bolt is interconnected to the carriage via a lock pin **90** (referring to FIG. **5**) through the bolt which engages lock cam way **91** of the carriage. The lock rotation (of approximately 54° in this embodiment) is driven by the carriage longitudinal stroke (of approximately 0.85") The forward velocity of barrel assembly **34** is governed by buffer **140** to ensure the barrel assembly does not exceed a predetermined maximum velocity. Upon reaching a fixed position in receiver **22**, firing pin spring **100** is released to urge firing pin **98** into contact with round **170**. The contact results in round **170** being fired.

Propellant gas from the fired round accelerates the projectile through barrel **52**. When the accelerating projectile passes a gas port in barrel **52**, bleed gas is directed through gas port **83** into gas chamber **82** to move bolt assembly **42** rearwardly in barrel extension **60** accomplishing unlock of the bolt and extraction of the spent casing from the chamber. As illustrated in FIG. **15**, the spent casing **174** is ejected from the bolt face as another round **176** is advanced by feed sprocket **54**. Bolt assembly **42** moves rearwardly within barrel extension **60** to compress the bolt spring and re-engage the bolt sear.

Part of the recoil impulse of the fired round cancels the forward momentum of the barrel assembly **34**. After this deceleration, the remainder of the recoil impulse accelerates the barrel assembly **34** rearwardly along the recoil stroke within receiver **22**. The maximum forward velocity of barrel assembly **34** allowed by buffer **140** is chosen to ensure that the forward momentum of the barrel assembly is not great enough to cancel the recoil impulse of the round and that the remainder of the recoil impulse is great enough to move barrel assembly **34** to the rearward position. The maximum rearward velocity of barrel assembly **34** allowed by buffer **140** is chosen to accomplish the feed index function, recompress the main spring, and to prevent the barrel assembly from moving too far rearwardly within receiver **22**. Thus, if barrel **52** of weapon **20** is angled upwardly such that gravity increases the recoiling force of the barrel assembly, buffer **140** will trim the rearward velocity to prevent the barrel assembly from exceeding the predetermined maximum.

When barrel assembly **34** reaches the rearward position illustrated in FIG. **16**, operating spring **44** is fully compressed. Feeder sprocket **54** has advanced the next round to be fired **176** into the strip position. In the automatic mode, with trigger remaining depressed, operating spring **44** overcomes the rearward momentum of the barrel assembly **34** and the barrel assembly **34** begins to accelerate forwardly within receiver **22** and the firing sequence is repeated. If in the auto mode, and the trigger has been released prior to this point in the cycle, the main sear will engage the barrel assembly to arrest motion and to stop firing.

If the weapon is operating in the semi-automatic firing mode, barrel assembly **34** engages semi-automatic sear **132** at the rearward position. Depression of trigger **38** releases barrel assembly **34** and the firing sequence is repeated.

Thus, the automatic projectile firing weapon of the present invention provides a recoil device that allows the weapon to achieve a steady state dynamic recoil action on the first shot and every shot thereafter. This recoil device minimizes the deleterious effects of conventional gun recoil on light-weight weapon system accuracy. The natural firing rate of the barrel assembly and the gas operation of the bolt further reduce the transmission of recoil forces to the receiver. This reduction of recoil force permits a lightweight weapon and mount configuration, while retaining dynamic stability. The lightweight configuration enhances weapon system capabilities in transport, deployment and field operation.

It will be apparent to those skilled in the art that various modifications and variations can be made in the method of manufacture of the present invention and in construction of this automatic projectile firing weapon without departing from the scope or spirit of the invention. Other embodiments of the invention will be apparent to those skilled in the art from consideration of the specification and practice of the invention disclosed herein. It is intended that the specification be considered as exemplary only, with a true scope and spirit of the invention being indicated by the following claims.

What is claimed is:

1. An automatic projectile firing weapon, the weapon comprising:

a receiver having a main sear and a trackway;

a barrel assembly slidably mounted in said trackway and moveable between a rearward position and a forward position, said barrel assembly being engageable with said main sear at the rearward position and having a firing position between the rearward position and the forward position;

an operating spring connected between said receiver and said barrel assembly, said operating spring biasing said barrel assembly toward the forward position;

a retracting device operable to move said barrel assembly rearwardly into engagement with said main sear, thereby compressing said operating spring;

a trigger for releasing said main sear, thereby allowing said operating spring to move said barrel assembly forwardly; and

a buffer connected between said receiver and said barrel assembly to dampen the forward velocity of said barrel assembly such that said barrel assembly is moving at a predetermined maximum velocity when the barrel assembly reaches the firing position, whereby the recoil energy from firing said round is absorbed in part by the forward motion of said barrel assembly and in part by said operating spring.

2. The weapon of claim **1**, wherein the receiver further includes a cocking lever trip defining the firing position of the barrel assembly, the cocking lever trip configured to engage the barrel assembly as the barrel assembly moves towards the forward position.

3. The weapon of claim **1**, wherein the retracting device comprises:

a pawl engageable with said barrel assembly; and

a handle to move said pawl to engage and retract said barrel assembly into engagement with said main sear.

4. The weapon of claim **3**, wherein the retracting device further comprises:

a guide tube having a longitudinal slot, said pawl projecting through said slot such that said slot guides movement of said pawl.

5. The weapon of claim **3**, wherein said barrel assembly includes a bolt carriage having a slot, said pawl being configured to engage said slot to retract said bolt carriage within the barrel assembly.

6. The weapon of claim 5, wherein said bolt carriage has a second slot, said pawl being engageable with said first slot to retract said bolt carriage within the barrel assembly and engageable with said second slot to retract said barrel assembly into engagement with said main sear.

7. The weapon of claim 1, wherein the buffer includes a housing for containing a damping fluid, a shuttle valve slidably disposed within said housing and having a plurality of orifices, and a piston connected to said receiver and having a head slidably disposed within said shuttle valve, wherein the velocity of movement of said piston head is governed by the rate of movement of the damping fluid through said plurality of orifices between said shuttle valve and said housing.

8. The weapon of claim 1 wherein said buffer is operable to dampen the velocity of said barrel assembly in both the forward and rearward directions.

9. The weapon of claim 2, wherein said barrel assembly includes a barrel having a chamber and locking lugs, a barrel extension, and a bolt assembly slidably mounted in the barrel extension and having a bolt, a bolt carriage, a bolt spring, and a firing mechanism, said bolt spring acting to bias said bolt assembly forward relative to said barrel assembly to load and lock a round into said barrel chamber, said firing mechanism being configured to fire said chambered round when said barrel assembly is moving forward and said barrel assembly reaches said firing location and engages cocking lever trip.

10. The weapon of claim 9, wherein said weapon is disposed to fire a projectile from a cartridge, said bolt assembly including a piston, said piston operating to use gas from a fired round to propel said bolt assembly rearwardly relative to said barrel assembly thereby unlocking said bolt and extracting said cartridge and compressing said bolt spring.

11. The weapon of claim 1, wherein said projectile firing weapon is a lightweight automatic crew served weapon.

12. The weapon of claim 1, including a mount, said mount being connected to said receiver such that said weapon may be positioned on a rigid structure.

13. The weapon of claim 12, wherein said weapon is fixedly positioned on said rigid structure.

14. The weapon of claim 12, wherein said weapon is moveably positioned on said rigid structure.

15. The weapon of claim 12, wherein said mount is connected to said weapon such that said receiver may pivot vertically.

16. The weapon of claim 12, wherein said mount is connected to said weapon such that said gun receiver may pivot horizontally.

17. The weapon of claim 12, wherein said rigid structure is a portable tripod.

18. A method of absorbing the recoil force of an automatic projectile firing weapon having a receiver, a barrel assembly slidably mounted in the receiver, and an operating spring connected between the receiver and the barrel assembly, the method comprising the steps of:

compressing said operating spring by retracting said barrel assembly within said receiver to engage said barrel assembly with a main sear when said operating spring is fully compressed;

initiating a firing cycle by releasing said main sear to allow said operating spring to bias said barrel assembly forwardly within said receiver;

chambering a round to be fired as said barrel assembly moves forward;

buffering the forward motion of said barrel assembly to prevent the barrel assembly from exceeding a predetermined maximum velocity; and

firing the round when said barrel assembly reaches a predetermined location in said receiver, the impulse of the fired round reversing the motion of said barrel assembly such that said barrel assembly moves rearwardly to fully compress the operating spring.

19. The method of claim 18, further comprising the step of buffering the rearward motion of said barrel assembly to prevent the barrel assembly from exceeding a predetermined maximum rearward velocity.

20. The method of claim 18, wherein said predetermined location in said receiver is defined by a cocking lever trip.

21. An automatic projectile firing weapon, comprising:

a receiver having a main sear;

a barrel assembly mounted on the receiver for sliding movement between a rearward position where the barrel assembly is engageable with the sear and a forward position, the barrel assembly having a firing position between the rearward position and the forward position;

an operating spring acting on the barrel assembly to bias the barrel assembly into a forward velocity;

a means for disengaging the main sear from the barrel assembly; and

a means for buffering the forward velocity of the barrel assembly so that the barrel assembly does not exceed a predetermined velocity when the barrel assembly reaches the firing position.

22. The weapon of claim 21, further comprising a means for retracting the barrel assembly into engagement with the main sear.

23. An automatic projectile firing weapon, the weapon comprising:

a receiver having a main sear;

a barrel assembly mounted in the receiver for reciprocal movement between a rearward position where the barrel assembly is engageable with the main sear and a forward position, the barrel assembly having a firing position between the rearward position and the forward position;

a trigger operable to disengage the barrel assembly and the main sear;

an operating spring acting on the barrel assembly to bias the barrel assembly into a forward velocity; and

a buffer operatively connected to the barrel assembly to dampen the forward velocity of the barrel assembly so that the barrel assembly does not exceed a predetermined velocity when the barrel assembly reaches the firing position.

24. The weapon of claim 23, further comprising a retracting device engageable with the barrel assembly and operable to move the barrel assembly to the rearward position and into engagement with the main sear.

25. The weapon of claim 23, wherein the buffer includes a housing, a shuttle valve slidably disposed within the housing and having a plurality of orifices, and a piston connected to the receiver and having a head slidably disposed within the shuttle valve.

26. The weapon of claim 23 wherein the buffer dampens the velocity of the barrel assembly in both the forward and rearward directions.

* * * * *