UNITED STATES INTERNATIONAL TRADE COMMISSION

WASHINGTON, D.C.

Before the Honorable Doris Johnson Hines

Administrative Law Judge

In the Matter of **CERTAIN SMART WEARABLE DEVICES, SYSTEMS, AND COMPONENTS THEREOF**	**Investigation No. 337-TA-1398**

RESPONDENTS' PREHEARING BRIEF

CONTENTS

I. INTRODUCTION 1

A. PROCEDURAL HISTORY 11

B. THE PARTIES 11

1. Complainants 11

2. Respondents 13

II. LEGAL STANDARDS 16

A. Invalidity 16

1. Anticipation – 35 U.S.C. § 102(a) 16

2. Obviousness – 35 U.S.C. § 103 17

B. Direct Infringement – Literal 19

C. Direct Infringement – Doctrine of Equivalents 20

D. Domestic Industry 21

1. Technical Prong 21

2. Economic Prong 22

E. Prosecution History Estoppel 24

III. CLAIM CONSTRUCTION 24

IV. THE RINGCONN ACCUSED PRODUCTS DO NOT INFRINGE THE ’178 PATENT 27

A. Asserted Claims of the ’178 Patent 31

B. Disclosed Embodiments of the ’178 Patent Claims 32

C. The Original Owner’s First Commercial Product was an Embodiment of the ’178 Patent 37

D. RingConn’s Accused Products are Fundamentally Different From What is Claimed by the ’178 Patent 38

E. RingConn’s Accused Products do not Infringe Independent Claim 1 43

1. Limitation 1[a]: an external housing component defining an outer circumferential surface of the finger-worn wearable ring device 43

2. Limitation 1[b(i)]: an internal housing component defining an inner circumferential surface of the finger-worn wearable ring device 46

TABLE OF CONTENTS
(continued)

Page

3. Limitation 1[b(ii)]: "the internal housing component coupled with the external housing component"..... 68

4. Limitation 1[c]: a battery positioned within a cavity formed between the internal housing component and the external housing component, wherein the battery comprises a shape and size configured to fit within the cavity between the outer circumferential srface of the external housing component and the inner circumferential surface of the internal housing component, and wherein the battery extends through at least a first portion of the cavity of the finger-worn wearable ring device 68

5. Limitation 1[d]: a printed circuit board disposed between the internal housing component and the external housing component, wherein the printed circuit board extends through at least a second portion of the cavity of the finger-worn wearable ring devicedifferent from the first portion; and..... 87

F. RingConn's Accused Products Do Not Infringe Dependent Claim 2: "The finger-worn wearable ring device of claim 1, wherein the first portion of the cavity of the finger-worn wearable ring device is non-overlapping with the second portion of the cavity of te finger-worn wearable ring device." 96

G. RingConn's Accused Products Do Not Infringe Dependent Claim 12: "the finger-worn wearable ring device of claim 1, wherein the battery comprises a curved battery, wherein an arc of the curved battery approximates a corresponding arc of the external housin component." 97

H. RingConn's Accused Products Do Not Infringe Dependent Claims 13 and 14: "The finger-worn wearable ring device of claim 1, wherein the one or more sensors comprise a first light-emitting component configured to emit light associated with a first wavelengt, and a second light-emitting component configured to emit light associated with a second wavelength different from the first wavelength," and "The finger-worn wearable ring device of claim 13, wherein the first wavelength is associated with visible light, and wherein the second wavelength is associated with infrared light." 98

TABLE OF CONTENTS
(continued)

Page

I. RingConn's Accused Products Do Not Infringe Dependent Claims 17 and 18: "The finger-worn wearable ring device of claim 1, wherein the external housing component and the internal housing component define the cavity configured to at least partially surroun the battery, and the printed circuit board, wherein one of the external housing component or the internal housing component comprises: a first side wall and a second side wall that extend between the internal housing component and the external housing component, wherein the cavity is defined at least in part by the outer circumferential surface, the inner circumferential surface, the first side wall, and the second side wall," and "the finger-worn wearable ring device of claim 17, wherein the first side wall, the second side wall, or both, are substantially perpendicular to the inner circumferential surface, the outer circumferential surface, or both." 98

V. THE ULTRAHUMAN ACCUSED PRODUCTS DO NOT INFRINGE THE ASSERTED CLAIMS OF THE '178 PATENT 99

A. Patent Background 99

B. The Ultrahuman Ring Does Not Read on the Claimed Embodiment 102

C. The Divergence of Ultrahuman's Ring from the Claims Is a Consequence of Ultrahuman's Manufacturing Process 107

D. Independent Claim 1 107

1. Limitation 1[b(i)]: an internal housing component defining an inner circumferential surface of the finger-worn wearable ring device 107

2. Limitation 1[b(ii)]: "the internal housing component coupled with the external housing component" 118

3. Limitation 1[c]: a battery positioned within a cavity formed between the internal housing component and the external housing component, wherein the battery comprises a shape and size configured to fit within the cavity between the outer circumferential srface of the external housing component and the inner circumferential surface of the internal housing component, and wherein the battery extends through at least a first portion of the cavity of the finger-worn wearable ring device 119

4. Limitation 1[d]: a printed circuit board disposed between the internal housing component and the external housing component, wherein the printed circuit board extends through at least a second portion of the cavity of the finger-worn wearable ring devicedifferent from the first portion; and 128

TABLE OF CONTENTS
(continued)

Page

5. Limitation 1[e]: one or more sensors electrically coupled with the printed circuit board and the battery and configured to acquire data from the user through the internal housing component. 133

E. Dependent Claim 2: "The finger-worn wearable ring device of claim 1, wherein the first portion of the cavity of the finger-worn wearable ring device is non-overlapping with the second portion of the cavity of the finger-worn wearable ring device." 133

F. Dependent Claim 12: "the finger-worn wearable ring device of claim 1, wherein the battery comprises a curved battery, wherein an arc of the curved battery approximates a corresponding arc of the external housing component." 134

G. Dependent Claims 13 and 14: "The finger-worn wearable ring device of claim 1, wherein the one or more sensors comprise a first light-emitting component configured to emit light associated with a first wavelength, and a second light-emitting component configured to emit light associated with a second wavelength different from the first wavelength," and "The finger-worn wearable ring device of claim 13, wherein the first wavelength is associated with visible light, and wherein the second wavelength is associated with infrared light." 134

H. Dependent Claims 17 and 18: "The finger-worn wearable ring device of claim 1, wherein the external housing component and the internal housing component define the cavity configured to at least partially surround the battery, and the printed circuit board wherein one of the external housing component or the internal housing component comprises: a first side wall and a second side wall that extend between the internal housing component and the external housing component, wherein the cavity is defined at least in part by the outer circumferential surface, the inner circumferential surface, the first side wall, and the second side wall," and "the finger-worn wearable ring device of claim 17, wherein the first side wall, the second side wall, or both, are substantially perpendicular to the inner circumferential surface, the outer circumferential surface, or both."..... 135

VI. THE ALLEGED DOMESTIC INDUSTRY PRODUCTS DO NOT PRACTICE THE ASSERTED CLAIMS OF THE '178 PATENT 137

A. Independent Claim 1 137

1. Limitation 1[a]: an external housing component defining an outer circumferential surface of the finger-worn wearable ring device 137

2. Limitation 1[b(i)]: an internal housing component defining an inner circumferential surface of the finger-worn wearable ring device 139

TABLE OF CONTENTS
(continued)

Page

3. Limitation 1[b(ii)]: "the internal housing component coupled with the external housing component"..... 151

4. Limitation 1[b(iii)]: wherein at least a portion of the inner circumferential surface of the internal housing component is configured to contact a tissue of a user when the finger-worn wearable ring device is being worn by the user;..... 152

5. Limitation 1[c]: a battery positioned within a cavity formed between the internal housing component and the external housing component, wherein the battery comprises a shape and size configured to fit within the cavity between the outer circumferential srface of the external housing component and the inner circumferential surface of the internal housing component, and wherein the battery extends through at least a first portion of the cavity of the finger-worn wearable ring device;..... 153

6. Limitation 1[d]: a printed circuit board disposed between the internal housing component and the external housing component, wherein the printed circuit board extends through at least a second portion of the cavity of the finger-worn wearable ring devicedifferent from the first portion; and..... 161

7. Limitation 1[e]: one or more sensors electrically coupled with the printed circuit board and the battery and configured to acquire data from the user through the internal housing component. 163

B. Dependent Claim 2: "The finger-worn wearable ring device of claim 1, wherein the first portion of the cavity of the finger-worn wearable ring device is non-overlapping with the second portion of the cavity of the finger-worn wearable ring device." 163

C. Dependent Claim 12: "the finger-worn wearable ring device of claim 1, wherein the battery comprises a curved battery, wherein an arc of the curved battery approximates a corresponding arc of the external housing component."..... 165

D. Dependent Claims 13 and 14: "The finger-worn wearable ring device of claim 1, wherein the one or more sensors comprise a first light-emitting component configured to emit light associated with a first wavelength, and a second light-emitting component configured to emit light associated with a second wavelength different from the first wavelength," and "The finger-worn wearable ring device of claim 13, wherein the first wavelength is associated with visible light, and wherein the second wavelength is associated with infrared light." 166

TABLE OF CONTENTS
(continued)

Page

E. Dependent Claims 17 and 18: "The finger-worn wearable ring device of claim 1, wherein the external housing component and the internal housing component define the cavity configured to at least partially surround the battery, and the printed circuit board, wherein one of the external housing component or the internal housing component comprises: a first side wall and a second side wall that extend between the internal housing component and the external housing component, wherein the cavity is defined at least in part by the outer circumferential surface, the inner circumferential surface, the first side wall, and the second side wall," and "the finger-worn wearable ring device of claim 17, wherein the first side wall, the second side wall, or both, are substantially perpendicular to the inner circumferential surface, the outer circumferential surface, or both." 166

VII. THE ASSERTED CLAIMS OF THE '178 PATENT ARE INVALID 168

A. The '178 Patent Is Invalid under the *Ohio Willow* Doctrine. 168

1. The Validity of U.S. Patent Nos. 11,868,179; 11,599,147; and 10,893,833 Was Finally Adjudicated via the Samsung Proceedings..... 170

2. The Question of Validity for '178 Patent Is the Same as for the '179, '147, and '833 Patents..... 171

3. Oura's Decision to Self-Invalidate Its Own Patent Portfolio Raises Additional Questions. 174

B. '178 Patent Background..... 174

1. Overview of the '178 Patent 174

2. Level of Skill in the Art 177

C. Overview of the Prior Art References 178

1. Asada..... 178

2. Webster 181

3. Henderson 183

4. Yuen..... 185

5. Babashan..... 186

6. Niwa..... 187

7. Wissmar 193

8. Armstrong 196

9. Schröder 197

TABLE OF CONTENTS
(continued)

Page

10. Development of the Ring Sensor for Healthcare Automation (Yang) 200

D. The State of the Art 201

E. Asada in view of the POSA's knowledge; and Asada in view of Other References Renders Obvious the Asserted Claims 209

1. Claim [1-pre]: Asada; Asada in view the POSA's knowledge; and Asada in combination with Other References discloses "[a] finger-worn wearable ring device, comprising:" 209

2. Claim [1a]: Asada; Asada in view the POSA's knowledge; and Asada in combination with Other References discloses "an external housing component defining an outer circumferential surface of the finger-worn wearable ring device;" 210

3. Claim [1b]: Asada; Asada in view the POSA's knowledge; and Asada in combination with Other References discloses "an internal housing component defining an inner circumferential surface of the finger-worn wearable ring device, the internal housing component coupled with the external housing component, wherein at least a portion of the inner circumferential surface of the internal housing component is configured to contact a tissue of a user when the finger-worn wearable ring device is being worn by the user;" 214

4. Claim [1c]: Asada in view the POSA's knowledge; and Asada in combination with Other References renders obvious "a battery positioned within a cavity formed between the internal housing component and the external housing component, wherein the battery comprises a shape and size configured to fit within the cavity between the outer circumferential surface of the external housing component and the inner circumferential surface of the internal housing component, and wherein the battery extends through at least a first portion of the cavity of the finger-worn wearable ring device;" 217

5. Claim [1d]: Asada discloses: "a printed circuit board disposed between the internal housing component and the external housing component, wherein the printed circuit board extends through at least a second portion of the cavity of the finger-worn wearabl ring device different from the first portion" 225

TABLE OF CONTENTS
(continued)

Page

6. Claim [1e]: Asada; Asada in view the POSA's knowledge; and Asada in combination with Other References discloses: "one or more sensors electrically coupled with the printed circuit board and the battery and configured to acquire data from the user through the internal housing component." 227

7. Claim [2]: Asada in view of the POSA's knowledge discloses: "The finger-worn wearable ring device of claim 1, wherein the first portion of the cavity of the finger-worn wearable ring device is non-overlapping with the second portion of the cavity of the inger-worn wearable ring device." 230

8. Claim [12]: Asada in view the POSA's knowledge; and Asada in combination with Other References: "The finger-worn wearable ring device of claim 1, wherein the battery comprises a curved battery, wherein an arc of the curved battery approximates a corresponding arc of the external housing component." 231

9. Claim [13]: Asada discloses: "The finger-worn wearable ring device of claim 1, wherein the one or more sensors comprise a first light-emitting component configured to emit light associated with a first wavelength, and a second light-emitting component cofigured to emit light associated with a second wavelength different from the first wavelength." 231

10. Claim [14]: Asada discloses: "The finger-worn wearable ring device of claim 13, wherein the first wavelength is associated with visible light, and wherein the second wavelength is associated with infrared light." 232

11. Claim [17]: Asada; Asada in view the POSA's knowledge; and Asada in combination with Other References: "The finger-worn wearable ring device of claim 1, wherein the external housing component and the internal housing component define the cavity configured to at least partially surround the battery, and the printed circuit board, wherein one of the external housing component or the internal housing component comprises: a first side wall and a second side wall that extend between the internal housing component and the external housing component, wherein the cavity is defined at least in part by the outer circumferential surface, the inner circumferential surface, the first side wall, and the second side wall." 233

TABLE OF CONTENTS
(continued)

Page

12. Claim [18]: Asada; Asada in view the POSA's knowledge; and Asada in combination with Other References discloses: "The finger-worn wearable ring device of claim 17, wherein the first side wall, the second side wall, or both, are substantially perpendicular to the inner circumferential surface, the outer circumferential surface, or both." 235

F. Babashan Anticipates; Babashan Renders Obvious in view of Other References; and Babashan Renders Obvious in view of the POSA's knowledge the Asserted Claims 237

1. Claim [1-pre]: Babashan discloses "[a] finger-worn wearable ring device, comprising:" 237

2. Claim [1a]: Babashan discloses "an external housing component defining an outer circumferential surface of the finger-worn wearable ring device;" 239

3. Claim [1b]: Babashan discloses "an internal housing component defining an inner circumferential surface of the finger-worn wearable ring device, the internal housing component coupled with the external housing component, wherein at least a portion of theinner circumferential surface of the internal housing component is configured to contact a tissue of a user when the finger-worn wearable ring device is being worn by the user;" 241

4. Claim [1c]: Babashan; Babashan in combination Wissmar; and Babashan in view of the POSA's knowledge discloses "a battery positioned within a cavity formed between the internal housing component and the external housing component, wherein the battery comprises a shape and size configured to fit within the cavity between the outer circumferential surface of the external housing component and the inner circumferential surface of the internal housing component, and wherein the battery extends through at least a first portion of the cavity of the finger-worn wearable ring device;" 243

5. Claim [1d]: Babashan; and Babashan in view of the POSA's knowledge discloses: "a printed circuit board disposed between the internal housing component and the external housing component, wherein the printed circuit board extends through at least a second portion of the cavity of the finger-worn wearable ring device different from the first portion; and" 246

TABLE OF CONTENTS
(continued)

Page

6. Claim [1e]: Babashan; and Babashan in view of the POSA's knowledge discloses "one or more sensors electrically coupled with the printed circuit board and the battery and configured to acquire data from the user through the internal housing component." 253

7. Claim [2]: Babashan; Babashan in view of the POSA's knowledge; and Babashan in combination with Wissmar discloses: "[t]he finger-worn wearable ring device of claim 1, wherein the first portion of the cavity of the finger-worn wearable ring device is non-overlapping with the second portion of the cavity of the finger-worn wearable ring device." 256

8. Claim [12]: Babashan in view of the POSITA's knowledge; and Babashan in combination with the Other References renders obvious: "[t]he finger-worn wearable ring device of claim 1, wherein the battery comprises a curved battery, wherein an arc of the curved battery approximates a corresponding arc of the external housing component." 260

9. Claim [13]: Babashan discloses: "[t]he finger-worn wearable ring device of claim 1, wherein the one or more sensors comprise a first light-emitting component configured to emit light associated with a first wavelength, and a second light-emitting componet configured to emit light associated with a second wavelength different from the first wavelength." 267

10. Claim [14]: Babashan discloses: "[t]he finger-worn wearable ring device of claim 13, wherein the first wavelength is associated with visible light, and wherein the second wavelength is associated with infrared light." 270

11. Claim [17]: Babashan; and Babashan in view of the POSA's knowledge discloses: "[t]he finger-worn wearable ring device of claim 1, wherein the external housing component and the internal housing component define the cavity configured to at least partially surround the battery, and the printed circuit board, wherein one of the external housing component or the internal housing component comprises: a first side wall and a second side wall that extend between the internal housing component and the external housing component, wherein the cavity is defined at least in part by the outer circumferential surface, the inner circumferential surface, the first side wall, and the second side wall." 272

TABLE OF CONTENTS
(continued)

Page

12. Claim [18]: Babashan; Babashan in view of the POSA's knowledge discloses: "[t]he finger-worn wearable ring device of claim 17, wherein the first side wall, the second side wall, or both, are substantially perpendicular to the inner circumferential surface, the outer circumferential surface, or both." 275

G. Niwa Anticipates; Niwa Renders Obvious in view of Other References; and Niwa Renders Obvious in view of the POSA's knowledge the Asserted Claims 276

1. Claim [1-pre]: Niwa discloses "[a] finger-worn wearable ring device, comprising:" 276

2. Claim [1a]: Niwa; Niwa in view of the POSA's knowledge; and Niwa in combination with Schröder discloses "an external housing component defining an outer circumferential surface of the finger-worn wearable ring device;" 277

3. Claim [1b]: Niwa; Niwa in view of the POSA's knowledge; and Niwa in combination with Schröder discloses "an internal housing component defining an inner circumferential surface of the finger-worn wearable ring device, the internal housing component coupled with the external housing component, wherein at least a portion of the inner circumferential surface of the internal housing component is configured to contact a tissue of a user when the finger-worn wearable ring device is being worn by the user;" 285

4. Claim [1c]: Niwa discloses "a battery positioned within a cavity formed between the internal housing component and the external housing component, wherein the battery comprises a shape and size configured to fit within the cavity between the outer circumferential surface of the external housing component and the inner circumferential surface of the internal housing component, and wherein the battery extends through at least a first portion of the cavity of the finger-worn wearable ring device;" 294

5. Claim [1d]: Niwa discloses: "a printed circuit board disposed between the internal housing component and the external housing component, wherein the printed circuit board extends through at least a second portion of the cavity of the finger-worn wearable ring device different from the first portion" 300

6. Claim [1e]: Niwa discloses: "one or more sensors electrically coupled with the printed circuit board and the battery and configured to acquire data from the user through the internal housing component." 304

TABLE OF CONTENTS
(continued)

Page

7. Claim [2]: Niwa discloses: "The finger-worn wearable ring device of claim 1, wherein the first portion of the cavity of the finger-worn wearable ring device is non-overlapping with the second portion of the cavity of the finger-worn wearable ring device." 307

8. Claim [12]: Niwa in view of the POSA's knowledge; and Niwa in combination with Other References discloses: "The finger-worn wearable ring device of claim 1, wherein the battery comprises a curved battery, wherein an arc of the curved battery approximates a corresponding arc of the external housing component." 309

9. Claim [13]: Niwa discloses: "The finger-worn wearable ring device of claim 1, wherein the one or more sensors comprise a first light-emitting component configured to emit light associated with a first wavelength, and a second light-emitting component configured to emit light associated with a second wavelength different from the first wavelength." 318

10. Claim [14]: Niwa discloses: "The finger-worn wearable ring device of claim 13, wherein the first wavelength is associated with visible light, and wherein the second wavelength is associated with infrared light." 321

11. Claim [17]: Niwa; Niwa in view of the POSA's knowledge; and Niwa in combination with Schröder discloses: "The finger-worn wearable ring device of claim 1, wherein the external housing component and the internal housing component define the cavity configured to at least partially surround the battery, and the printed circuit board, wherein one of the external housing component or the internal housing component comprises: a first side wall and a second side wall that extend between the internal housing component and the external housing component, wherein the cavity is defined at least in part by the outer circumferential surface, the inner circumferential surface, the first side wall, and the second side wall." 322

12. Claim [18]: Niwa; Niwa in view of the POSA's knowledge; and Niwa in combination with Schröder discloses: "The finger-worn wearable ring device of claim 17, wherein the first side wall, the second side wall, or both, are substantially perpendicular to the inner circumferential surface, the outer circumferential surface, or both." 325

H. Schröder Anticipates; and Schröder Renders Obvious in view of Other References the Asserted Claims 326

TABLE OF CONTENTS
(continued)

Page

1. Claim [1-pre]: Schröder discloses "[a] finger-worn wearable ring device, comprising:" 327

2. Claim [1a]: Schröder discloses "an external housing component defining an outer circumferential surface of the finger-worn wearable ring device;" 327

3. Claim [1b]: Schröder discloses "an internal housing component defining an inner circumferential surface of the finger-worn wearable ring device, the internal housing component coupled with the external housing component, wherein at least a portion of theinner circumferential surface of the internal housing component is configured to contact a tissue of a user when the finger-worn wearable ring device is being worn by the user" 328

4. Claim [1c]: Schröder discloses "a battery positioned within a cavity formed between the internal housing component and the external housing component, wherein the battery comprises a shape and size configured to fit within the cavity between the outer circumferential surface of the external housing component and the inner circumferential surface of the internal housing component, and wherein the battery extends through at least a first portion of the cavity of the finger-worn wearable ring device;" 333

5. Claim [1d]: Schröder discloses: "a printed circuit board disposed between the internal housing component and the external housing component, wherein the printed circuit board extends through at least a second portion of the cavity of the finger-worn wearble ring device different from the first portion" 338

6. Claim [1e]: Schröder; and Schröder in combination with Wissmar discloses: "one or more sensors electrically coupled with the printed circuit board and the battery and configured to acquire data from the user through the internal housing component." 340

7. Claim [2]: Schröder; and Schröder in combination with Niwa discloses: "The finger-worn wearable ring device of claim 1, wherein the first portion of the cavity of the finger-worn wearable ring device is non-overlapping with the second portion of the cavity of the finger-worn wearable ring device." 342

TABLE OF CONTENTS
(continued)

Page

8. Claim [12]: Schröder in view of the POSA's knowledge; and Schröder in combination with Other References discloses: "The finger-worn wearable ring device of claim 1, wherein the battery comprises a curved battery, wherein an arc of the curved battery approximates a corresponding arc of the external housing component." 344

9. Claim [13]: Schröder in combination with Niwa renders obvious: "The finger-worn wearable ring device of claim 1, wherein the one or more sensors comprise a first light-emitting component configured to emit light associated with a first wavelength, and a second light-emitting component configured to emit light associated with a second wavelength different from the first wavelength." 350

10. Claim [14]: Schröder in combination with Niwa renders obvious: "The finger-worn wearable ring device of claim 13, wherein the first wavelength is associated with visible light, and wherein the second wavelength is associated with infrared light." 352

11. Claim [17]: Schröder discloses: "The finger-worn wearable ring device of claim 1, wherein the external housing component and the internal housing component define the cavity configured to at least partially surround the battery, and the printed circuit bard, wherein one of the external housing component or the internal housing component comprises: a first side wall and a second side wall that extend between the internal housing component and the external housing component, wherein the cavity is defined at least in part by the outer circumferential surface, the inner circumferential surface, the first side wall, and the second side wall." 352

12. Claim [18]: Schröder discloses: "The finger-worn wearable ring device of claim 17, wherein the first side wall, the second side wall, or both, are substantially perpendicular to the inner circumferential surface, the outer circumferential surface, or bot." 354

I. Wissmar Anticipates; Wissmar Renders Obvious in view of Other References; and Wissmar Renders Obvious in view of the POSA's knowledge the Asserted Claims 355

1. Claim [1-pre]: Wissmar discloses "[a] finger-worn wearable ring device, comprising:" 356

2. Claim [1a]: Wissmar; Wissmar in view of the POSA's knowledge; and Wissmar in combination with Schröder discloses "an external housing component defining an outer circumferential surface of the finger-worn wearable ring device;" 357

TABLE OF CONTENTS
(continued)

Page

3. Claim [1b]: Wissmar; Wissmar in view of the POSA's knowledge; and Wissmar in combination with Schröder discloses "an internal housing component defining an inner circumferential surface of the finger-worn wearable ring device, the internal housing component coupled with the external housing component, wherein at least a portion of the inner circumferential surface of the internal housing component is configured to contact a tissue of a user when the finger-worn wearable ring device is being worn by the user;" 366

4. Claim [1c]: Wissmar discloses "a battery positioned within a cavity formed between the internal housing component and the external housing component, wherein the battery comprises a shape and size configured to fit within the cavity between the outer cirumferential surface of the external housing component and the inner circumferential surface of the internal housing component, and wherein the battery extends through at least a first portion of the cavity of the finger-worn wearable ring device;" 373

5. Claim [1d]: Wissmar discloses: "a printed circuit board disposed between the internal housing component and the external housing component, wherein the printed circuit board extends through at least a second portion of the cavity of the finger-worn wearale ring device different from the first portion; and" 376

6. Claim [1e]: Wissmar discloses: "one or more sensors electrically coupled with the printed circuit board and the battery and configured to acquire data from the user through the internal housing component." 379

7. Claim [2]: Wissmar discloses: "[t]he finger-worn wearable ring device of claim 1, wherein the first portion of the cavity of the finger-worn wearable ring device is non-overlapping with the second portion of the cavity of the finger-worn wearable ring deice." 381

8. Claim [12]: Wissmar in view of the POSA's knowledge; and Wissmar in combination with Other References discloses: "[t]he finger-worn wearable ring device of claim 1, wherein the battery comprises a curved battery, wherein an arc of the curved battery approximates a corresponding arc of the external housing component." 384

TABLE OF CONTENTS
(continued)

Page

9. Claim [13]: Wissmar in combination with Yuen discloses: "[t]he finger-worn wearable ring device of claim 1, wherein the one or more sensors comprise a first light-emitting component configured to emit light associated with a first wavelength, and a second light-emitting component configured to emit light associated with a second wavelength different from the first wavelength." 392

10. Claim [14]: Wissmar in combination with Yuen discloses: "[t]he finger-worn wearable ring device of claim 13, wherein the first wavelength is associated with visible light, and wherein the second wavelength is associated with infrared light." 394

11. Claim [17]: Wissmar in view of the POSA's knowledge; and Wissmar in combination with Schröder discloses: "[t]he finger-worn wearable ring device of claim 1, wherein the external housing component and the internal housing component define the cavity configured to at least partially surround the battery, and the printed circuit board, wherein one of the external housing component or the internal housing component comprises: a first side wall and a second side wall that extend between the internal housing component and the external housing component, wherein the cavity is defined at least in part by the outer circumferential surface, the inner circumferential surface, the first side wall, and the second side wall." 396

12. Claim [18]: Wissmar in view of the POSA's knowledge; and Wissmar in combination with Schröder renders discloses: "[t]he finger-worn wearable ring device of claim 17, wherein the first side wall, the second side wall, or both, are substantially perpendicular to the inner circumferential surface, the outer circumferential surface, or both." 398

13. Summary 400

J. Secondary Considerations 400

1. Any alleged commercial success and purported praise by others of the Oura Ring were due to factors unrelated to the subject matter claimed in the '178 Patent 401

2. The alleged unexpected results asserted by Complainants were predictable. 410

3. No Evidence of Copying 411

4. Long-felt but unmet need 415

TABLE OF CONTENTS
(continued)

Page

5. Failure of others 417

VIII. COMPLAINANTS FAIL TO SATISFY ECONOMIC PRONG OF DOMESTIC INDUSTRY WITH RESPECT TO THE '178 PATENT 418

A. Overview 419

B. Complainants Fail To Tie The Alleged Domestic Industry To Articles Protected By The '178 Patent. 420

1. Complainants' Fail To Show Significant Investment In Plant And Equipment. 422

2. Complainants' Fail To Show Substantial Employment Of Labor and Capital. 424

IX. PUBLIC INTEREST WOULD BE HARMED BY THE REQUESTED REMEDY 425

B. Ultrahuman Public Interest 426

1. Public Health and Welfare Implications 427

2. Competitive and Economic Considerations 431

3. Lack of Reasonable Alternatives 433

4. Specific Examples of Public Interest Harm 434

5. Exemptions, Delays 436

6. Conclusion 437

C. RingConn Public Interest 437

1. Public Health and Welfare Implications 438

2. Competitive and Economic Considerations 440

3. Lack of Reasonable Alternatives 442

4. Specific Examples of Public Interest Harm 443

5. Exemptions, Delays 444

6. Conclusion 445

X. REMEDY AND BOND 445

A. Ultrahuman 445

1. Exclusion Order 446

2. Cease and Desist Order 449

3. Bond 450

Patent Owner Oura Ex. 2014, 0018

TABLE OF CONTENTS
(continued)

Page

B. RingConn 451

1. Complainants Are Not Entitled to a Limited Exclusion Order Against RingConn 452

2. Complainants are Not Entitled to a Cease and Desist Order Against RingConn 454

3. Bond 455

XI. CONCLUSION 457

TABLE OF AUTHORITIES

Page

CASES

AIA Eng'g Ltd. v. Magotteaux Int'l S/A,
657 F.3d 1264 (Fed. Cir. 2011).....123

Alloc, Inc. v. Int'l Trade Comm'n,
342 F.3d 1361 (Fed. Cir. 2003).....22

Amgen Inc. v. Coherus BioSciences Inc.,
931 F.3d 1154 (Fed. Cir. 2019).....24

Asyst Techs., Inc. v. Emtrak,
544 F.3d 1310 (Fed. Cir. 2008).....19

August Technology Corp. v. Camtek, Ltd.,
655 F.3d 1278 (Fed. Cir. 2011).....72, 156

Aylus Networks, Inc. v. Apple Inc.,
856 F.3d 1353 (Fed. Cir. 2017).....24, 25, 116

Bio-Rad Lab'ys, Inc. v. Int'l Trade Comm'n,
998 F.3d 1320 (Fed. Cir. 2021).....121

Brown & Williamson Tobacco Corp. v. Philip Morris Inc.,
229 F.3d 1120 (Fed. Cir. 2000).....19

Celeritas Techs., Ltd. v. Rockwell Int'l Corp.,
150 F.3d 1354 (Fed. Cir. 1998).....17

Certain Agricultural Tractors Under 50 Power Take-Off Horsepower,
Inv. No. 337-TA-380, Comm'n Op. 444

Certain Automated Teller Machines, ATM Modules, Components Thereof, and Products Containing the Same,
Inv. No. 337-TA-989, Comm'n Op. (U.S.I.T.C. Aug. 3, 2017) 446

TABLE OF AUTHORITIES
(continued)

Page

Certain Automotive Fuel Caps and Radiator Caps and Related Packaging and Promotional Materials,
337-TA-319, U.S.I.T.C. Pub. No. 2481, Comm'n Op. 448

Certain Biometric Scanning Devices,
337-TA-720, Comm'n Op. at 23-24 (Nov. 10, 2011) 452

Certain Biometric Scanning Devices, *Components Thereof, Associated Software, and Products Containing the Same*,
Inv. No. 337-TA-720, Comm'n Op. at 23-24 (Nov. 10, 2011) 447

Certain Coenzyme Q10 Products. & Methods of Making Same,
Inv. No. 337-TA-790, Initial Determination (U.S.I.T.C. Sept. 27, 2012) 448, 454

Certain Compact Fluorescent Reflector Lamps, Products Containing Same and Components Thereof,
Inv. No. 337-TA-872, ID at 40 (Feb. 3, 2014) 21, 107, 108

Certain Digital Televisions & Certain Prods. Containing Same & Methods of Using Same,
337-TA-617, Comm'n Op. at 11 (Apr. 23, 2009) 452

Certain Digital Video Receivers and Related Hardware and Software Components,
337-TA-1103, ID at 314-315 (June 4, 2019) 452

Certain Electric Skin Care Devices, Brushes and Chargers Therefor, and Kits Containing the Same,
Inv. No. 337-TA-959, Comm'n Op. at 26 (Feb. 6, 2017) 453

Certain Electronic Candle Products And Components Thereof,
Inv. No. 337-TA-1195, Comm'n Op. at 39-40 (Oct. 4, 2022) 418

Patent Owner Oura Ex. 2014, 0021

TABLE OF AUTHORITIES
(continued)

Page

Certain Electronic Devices, Including Mobile Phones, Portable Music Players, and Computers,
Inv. No. 337-TA-701, ID at 5 (Nov. 18, 2010).....23

Certain Integrated Circuit Chips and Products Containing the Same,
Inv. No. 337-TA-859, Comm'n Op., at 42-43 (Aug. 22, 2014) 23

Certain Integrated Circuit Telecommunication Chips and Products Containing Same Including Dialing Apparatus,
Inv. No. 337-TA-337, USITC Pub. No. 2670, 1993 WL 13033517, Comm'n Op. (Aug. 1993) 444

Certain Integrated Repeaters, Switches, Transceivers, and Prods. Containing Same,
Inv. No. 337-TA-435, Comm'n Op. at 27 (Aug. 16, 2002) 453

Certain Marine SONAR Imaging Systems, Prods. Containing the Same, and Components Thereof,
Inv. No. 337-TA-926, Comm'n Op. at 59 (Dec. 17, 2015) 454

Certain Multimedia Display and Navigation Devices and Sys. Components Thereof and Prods. Containing Same,
Inv. No. 337-TA-694, Corr. Comm'n Op. at 5 (Aug. 8, 2011) 416

Certain Non-Volatile Memory Devices and Products Containing Same,
Inv. No. 337-TA-1046, ID at 146 (Apr. 27, 2018) 21

Certain Nonwoven Gas Filter Elements,
Inv. No. 337-TA-275, U.S.I.T.C. Pub. No. 2129, Comm'n Op.....448, 453

Certain Optoelectronic Devices, Components Thereof, and Products Containing the Same,
Inv. No. 337-TA-669, Comm'n Op. (U.S.I.T.C. July 26, 2010) 447, 448, 453

Patent Owner Oura Ex. 2014, 0022

TABLE OF AUTHORITIES
(continued)

Page

Certain Optoelectronic Devices for Fiber Optic Commc'ns, Components Thereof & Prods. Containing Same,
Inv. No. 337-TA-860, Comm'n Op. at 36-37 (May 9, 2014) 453

Certain Personal Data & Mobile Communication Devices & Related Software,
Inv. No. 337-TA-710, Comm'n Op. (U.S.I.T.C. Dec. 2011).....448, 454

Certain Polyimide Films, Products Containing Same, and Related Methods,
Inv. No. 337-TA-772, ID at 277-80 (May 10, 2012).....23

Certain Printing and Imaging Devices and Components Thereof,
Inv. No. 337-TA-690, Comm'n Op., 2011 WL 1303160 (Feb. 17, 2011) 417

Certain Printing and Imaging Devices and Components Thereof,
Inv. No. 337-TA-690, Comm'n Op. at 26 (Feb. 17, 2011).....22

Certain Replacement Automotive Lamps,
Inv. No. 337-TA-1291, Comm'n Op., 2024 WL 1298906 (March 7, 2024).....419

Certain Road Milling Machines and Component Thereof,
Inv. No. 337-TA-1067, Order No. 16 at 5 (Jan. 12, 2018) 417

Certain Rubber Antidegradants, Components Thereof, and Products Containing Same,
Inv. No. 337-TA-533, Comm'n Op. at 40 (Jul. 21, 2006) 454

Certain Silicon Microphone Packages and Products. Containing the Same,
Inv. No. 337-TA-629, Comm'n Op. (U.S.I.T.C. July 16, 2009) 448, 450, 454

Certain Sleep-Disordered Breathing Treatment Systems and Components Thereof,
Inv. No. 337-TA-890 24

Certain Solid State Storage Drives, Stack Electronics Components, and Products Containing Same,
Inv. No. 337-TA-1097, Comm'n Op., 2018 WL 4300500 (June 29, 2018).....417

Patent Owner Oura Ex. 2014, 0023

TABLE OF AUTHORITIES
(continued)

Page

Certain Stringed Musical Instruments and Components Thereof,
Inv. No. 337-TA-586, Comm'n Op. at 26 (May 16, 2008) 23

Certain Vision-Based Driver Assistance System Cameras and Components Thereof,
Inv. No. 337-TA-907, Comm'n Op. at 36 (Dec. 1, 2015) 22

CommScope Techs. LLC v. Dali Wireless Inc.,
10 F.4th 1289 (Fed. Cir. 2021) ..... passim

Conoco, Inc. v. Energy & Envtl. Int'l, L.C.,
460 F.3d 1349 (Fed. Cir. 2006).....24, 116

Dawn Equip. Co. v. Kentucky Farms Inc.,
140 F.3d 1009 (Fed. Cir. 1998).....21

Eagle Pharms Inc. v. Slaybak Pharma LLC,
958 F.3d 1171 (Fed. Cir. 2020).....124, 133

Ethicon Endo-Surgery, Inc. v. Covidien LP,
812 F.3d 1023 (Fed. Cir. 2016).....19

Finisar Corp. v. DirecTV Grp., Inc.,
523 F.3d 1323 (Fed. Cir. 2008).....20

Fox Factory, Inc. v. SRAM, LLC,
944 F.3d 1366 (Fed. Cir. 2019).....19

Gen. Am. Transp. Corp. v. Cryo-Trans, Inc.,
93 F.3d 766 (Fed. Cir. 1996).....20

Golden v. Samsung Elecs. Am., Inc.,
No. 2023-2120, 2024 WL 539973 (Fed. Cir. Feb. 12, 2024) 20

Google LLC v. Hammond Dev. Int'l, Inc.,
54 F.4th 1377 (Fed. Cir. 2022) 171

TABLE OF AUTHORITIES
(continued)

Page

Graham v. John Deere Co.,
383 U.S. 1 (1966).....18

High Tech Medical Instrumentation, Inc. v. New Image Industries, Inc.,
49 F.3d 1551 (Fed. Cir. 1995).....20, 71, 155

In re Antle,
444 F.2d 1168 (C.C.P.A. 1971).....18

In re Fielder,
471 F.2d 690, 176 USPQ 300 (CCPA 1973).....406

In re Gamble,
No. 2021-1848, 2022 WL 151986 (Fed. Cir. Jan. 18, 2022).....17

In re Winslow,
365 F.2d 1017 (C.C.P.A. 1966).....18

In the Matter of Certain Carburetors and Products Containing Such Carburetors,
Inv. No. 337-TA-1123, Comm'n Op. at 9 (Oct. 28, 2019).....417, 422

In the Matter of Certain Memory Modules & Components Thereof,
USITC Inv. No. 337-TA-1089 (Feb. 1, 2022).....170

InterDigital Communications, LLC v. Int'l Trade Comm'n,
707 F.3d 1295 (Fed. Cir. 2013).....22, 23

KSR Int'l Co. v. Teleflex, Inc.,
550 U.S. 398 (2007).....17, 18, 19

Lelo Inc. v. Int'l Trade Comm'n,
286 F.3d 879 (Fed. Cir. 2015).....422

Lelo Inc. v. Int'l Trade Comm'n,
786 F.3d 879 (Fed. Cir. 2015).....417

Patent Owner Oura Ex. 2014, 0025

TABLE OF AUTHORITIES
(continued)

Page

Microsoft Corp. v. Int'l Trade Comm'n,
731 F.3d 1354 (Fed. Cir. 2013).....22

Motiva, LLC v. Int'l Trade Comm'n,
716 F.3d 596 (Fed. Cir. 2013).....21

Ohio Willow Wood Co. v. Alps South, LLC,
735 F.3d 1333 (Fed. Cir. 2013).....169, 170

Oura Health OH v. Circular SAS,
No. 6:22-cv-478-ADA, ECF No. 47.....13

Pentec, Inc. v. Graphic Controls Corp.,
776 F.2d 309, 227 USPQ 766 (Fed. Cir. 1985).....405

PharmaStem Therapeutics, Inc. v. ViaCell, Inc.,
491 F.3d 1342 (Fed. Cir. 2007).....18

Procter & Gamble Co. v. Teva Pharm. USA, Inc.,
566 F.3d 989 (Fed. Cir. 2009).....415

Schering Corp. v. Geneva Pharm., Inc.,
339 F.3d 1373 (Fed. Cir. 2003).....17

Seal-Flex, Inc. v. Athletic Track and Court Constr.,
172 F.3d 836 (Fed. Cir. 1999).....20

SIMO Holdings, Inc. v. H.K. uCloudlink Network Tech., Ltd.,
983 F.3d 1367 (Fed. Cir. 2021).....72, 156

Southwall Techs., Inc. v. Cardinal IG Co.,
54 F.3d 1570 (Fed. Cir. 1995).....62

Soverain Software LLC v. Victoria's Secret Direct Brand Mgmt., LLC,
778 F.3d 1311 (Fed. Cir. 2015).....170, 171

TABLE OF AUTHORITIES
(continued)

Page

Spansion, Inc. v. Int'l Trade Comm'n,
629 F.3d 1331 (Fed. Cir. 2010).....20

Star Sci., Inc. v. R.J. Reynolds Tobacco Co.,
655 F.3d 1364 (Fed. Cir. 2011).....18

Tape Cartridges and Components Thereof,
Inv. No. 337-TA-1036, ID at 178 (Jan. 25, 2018).....21

Texas Instruments Inc. v. Cypress Semiconductor Corp.,
90 F.3d 1558 (Fed. Cir. 1996).....112, 117

Vectra Fitness, Inc. v. TNWK Corp.,
162 F.3d 1379 (Fed. Cir. 1998).....169, 171

Volvo Penta of the Americas, LLC v. Brunswick Corp.,
81 F.4th 1202 (Fed. Cir. 2023).....19

W. Union Co. v. MoneyGram Payment Sys. Inc.,
626 F.3d 1361 (Fed. Cir. 2010).....19

Warner-Jenkinson Co., Inc. v. Hilton Davis Chem. Co.,
520 U.S. 17 (1997).....21, 124

STATUTES

19 U.S.C. § 1337..... passim

35 U.S.C. § 102..... passim

35 U.S.C. § 103.....17, 18, 173

35 U.S.C. § 112.....111

35 U.S.C. § 271.....20

Patent Owner Oura Ex. 2014, 0027

TABLE OF AUTHORITIES
(continued)

Page

35 U.S.C. § 365 198

OTHER AUTHORITIES

19 C.F.R. § 210.50 454

MPEP § 716.03 406

MPEP § 2152 198

Respondents RingConn LLC and Shenzhen Ninenovo Technology Limited (collectively "RingConn Respondents" or "RingConn") and Ultrahuman Healthcare Pvt. Ltd, Ultrahuman Healthcare SP LLC, and Ultrahuman Healthcare Ltd. (collectively, "Ultrahuman Respondents" or "Ultrahuman" and, together with RingConn, "Respondents") submit this pre-hearing brief pursuant to the Procedural Schedule (Order No. 9) and in accordance with the ALJ's Ground Rules.

I. INTRODUCTION

Respondents have not committed any violation here—Respondents' products do not infringe the lone asserted patent, the asserted claims are invalid, and Complainants have no protectable economic domestic industry.

The patent at issue in this Investigation relates to the physical structure of a smart ring. The claimed technology is neither novel nor complex—rather, the claims recite a very specific, but basic arrangement of internal and external "housing components" (construed as "structures that enclose space"), a cavity (construed as "a hollow space") formed between those two "housing components," and electrical components—a battery and printed circuit board or PCB—positioned between the two "housing components" with the battery being "shape[d] and size[d]" to fit within the cavity. Significantly, the specification describes various embodiments of such rings, including ***single enclosure embodiments*** and ***double enclosure embodiments***. The claims at issue here cover ***only*** the latter. Respondents' accused products, however, are not double enclosure rings. Rather, they are single enclosure rings with a housing having a U-shaped cross-section that forms a U-shaped channel. Potting material completely fills that channel (the opposite of enclosing space) and encapsulates the electrical components.

Owing to this reality, Complainants' infringement case is a classic example of trying to fit a square peg into a round hole. Simply put, Respondents' single enclosure products (the square peg) do not fit within the scope of the asserted claims (the round hole) because the claims require

two enclosing structures, not one. And it is not just that fundamental difference that results in non-infringement. Rather, it is because of that fundamental difference that so many claim limitations are missing from Respondents' products.

Trying to force a claim to read on something that is fundamentally different than what is called for by the claims inevitably gets messy, which is exactly what is happening here. Indeed, Complainants have had to continually change and alter their infringement read, including as recently as their opposition to Respondents' Motion for Summary Determination, in an effort to salvage a viable infringement theory. In doing so, Complainants infringement reads have gotten so far afield from the asserted claims that the elements that allegedly infringe the '178 Patent are no longer even recognizable to the '178 Patent. Several key claim limitations are missing from Respondents' products, including the following.

No "internal housing component": Complainants originally argued that the internal housing component in single-enclosure embodiments that use potting material as a filler is the ***entirety*** of the potting material. This is shown below where Complainants' expert Dr. Sarrafzadeh originally asserted

[redacted]

36. Fig. 13 below shows a cross section of one embodiment of the ring having a housing 1310 that includes an **external housing component 1312** and an **internal potting or encapsulant 1314** (i.e., **internal housing component**). *Id.*, 18:64-67. A space 1320 is formed that is occupied by **battery 1330** and **printed circuit board 1340**. *Id.*, 19:6-10.

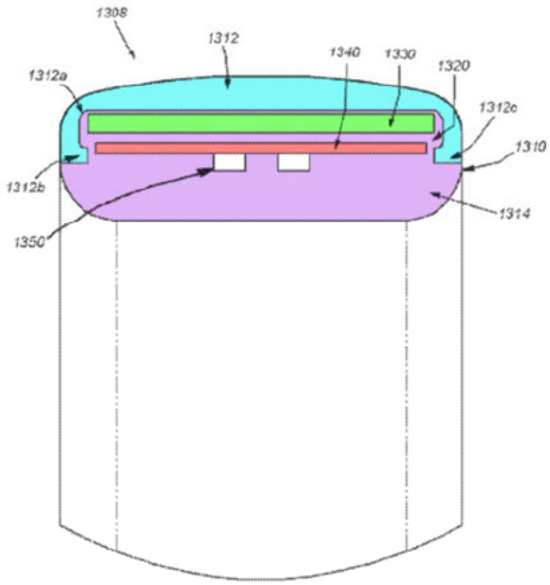

FIG. 13

RX-0402, Sarrafzadeh Report ¶ 36.

Likewise, in his opening expert report, Dr. Sarrafzadeh included images (shown below)

[redacted]

[redacted]

RX-0402, Sarrafzadeh Report at 49 (RingConn, left); 61; CX-0056; CX-0065 (Ultrahuman, right).

In their Final Infringement Contentions, Complainants again pointed , which is shown in their image below :

RX-0225C.20 at 18 (RingConn, left); RX-0226C.16 at 15 (Ultrahuman, right).

When it became clear that , Complainants were forced to change their infringement contentions at the 11th hour. Complainants' latest attempt to concoct an .

RX-0400; RX-0401; RX-0402, Sarrafzadeh Report at 48.

But this theory, like each of Complainants' prior theories, suffers fatal flaws. As an initial matter, this alleged internal housing component is entirely arbitray— . There is also no support whatsoever in the specification for Complainants' " Indeed, as discussed in detail below, the specification makes clear that the claimed "housing ***component***" is not and cannot be a ***portion*** of potting material. . Moreover, . Finally,

No coupling as interpreted by Complainants. The claims require that the internal housing component and the external housing component be "coupled," which has been construed to mean "connected." Complainants' recently-changed infringement argument to refer to the . Under this interpretation, . Thus, there is no direct connection, nor is there a connection through a separate, intervening component.

No "cavity": The term "cavity" has been defined as a "hollow space." And the hollow space must be "formed between the internal housing component and the external housing component." There is no credible dispute that Respondents' Accused Products . This is shown in the images below of the RingConn Accused Product and the Ultrahuman Accused Product.

RX-0399.10 (RingConn, left); CX-1069 (Ultrahuman, right).

Nonetheless, Complainants assert that the claimed cavity is an area defined by the outer surface of the components located in Respondents' accused products;

Here again, Complainants are pointing to something that is totally unrecognizable as a cavity to the '178 Patent; nothing like this alleged cavity is even remotely hinted at in the specification. But the bigger problem is Complainants attempt to overcome the lack of any hollow space by arguing that "" The problem with Complainants' novel argument is . Moreover,

[redacted]

[redacted].

No printed circuit board or cavity disposed "between" the housing components: The claims require that both the printed circuit board and the cavity be disposed between the internal and external housing components. To the extent Complainants are held to their original contentions, or the Staff argues that the entirety of the potting material is the internal housing component, neither the printed circuit board nor the cavity are disposed between the two housing components as required by the claims. Rather, both the printed circuit board and cavity are entirely surrounded by potting material, meaning neither can be between the potting material and something else. That is precisely why Complainants are now trying to argue that only some arbitrary portion of the potting material is the internal housing component as opposed to all of the potting material—they recognize that to call all of the potting material the internal housing components results in non-infringement of other limitations.

No "battery positioned … and shape[d] and size[d] … to fit within the cavity: Even if Complainants' alleged cavity had merit (and it does not), the battery is not "positioned" and "shape[d] and size[d] to fit within" it as required by the claims. Complainants' alleged cavity never even exists as a hollow space. It follows that a battery cannot be positioned and shaped and sized to fit within a hollow space that never exists. Indeed, it is the presence of the battery and potting that first gives rise to the alleged cavity. But the battery cannot be positioned and sized and shaped to fit in the something that allegedly exists for the first time ***after*** the battery has already been positioned and sized and shaped. In that case, the battery cannot be considered shaped and sized to fit into something that did not exist when the battery was shaped and sized. The fact is, the size of the alleged cavity is dictated by the size of the components, including the battery. The

larger the battery, the larger the alleged cavity. And a cavity defined by and dependent on the size and shape of the components is not a cavity in which those components are shaped and sized to fit. Complainants' infringement theory has it backwards—their alleged cavity is positioned and shaped and sized based on the size and shape of the battery. The claims require the reverse—that the battery is sized and shaped based on the size of the cavity—it has to be of "a shape and size configured to fit within the cavity".

Complainants are writing the words "within a cavity" and "shape[d] and size[d] to fit within the cavity" completely out of the claims. Complainants want the claims to simply recite a "battery disposed between the internal and external housing components." The inventors knew how to recite such a limitation—the claims expressly recite a printed circuit board "disposed between" the internal and external housing components. But with respect to the batter, the claims recite more: "a battery positioned… and shape[d] and size[d] to fit within a cavity." Every word in a claim has meaning and here Complainants are ignoring—in fact reading out—significant claim limitations (e.g., "positioned" and "of a shape and size configured to fit") because Respondents' products do not have them. They should not be able to get away with that.

No cavity between circumferential surfaces: The claims require a cavity formed between inner and outer circumferential surfaces. Respondents' products, however, Respondents even distinguish prior art on this ground, which cannot be reconciled with their infringement positions.

The '178 Patent is also invalid. Ring designs having internal and external housing components with a cavity between them in which a battery and PCB are positioned were well known in the art for years prior to the priority date of the asserted claims, under any reasonable

[redacted]

interpretation of the claims. Indeed, there is a flood of invalidating prior art—the following images alone from a few exemplary prior art references speak for themselves in terms of the strength of the prior art.

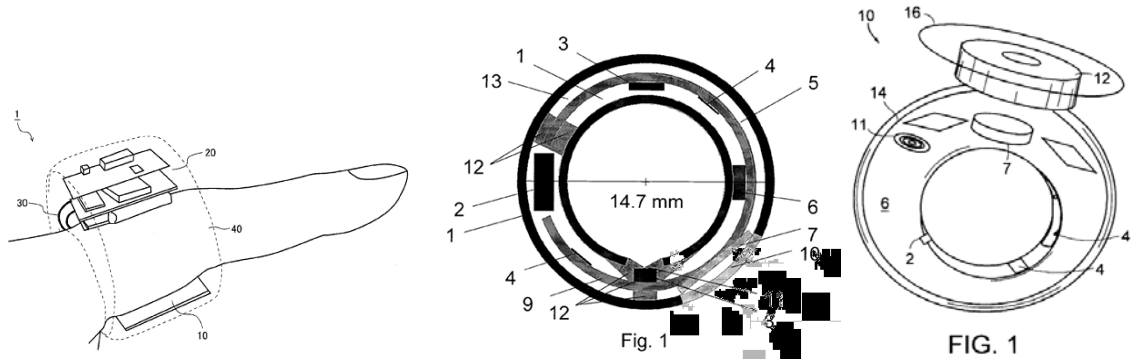

CX-1134; CX-1133; CX-1141.

This prior art discloses housings enclosing space, cavities between the housings, and electronic components positioned, sized and shaped to fit within those cavities. Significantly, when patent claims essentially identical to those asserted here were challenged recently before the PTAB, Complainants decided not to even contest their invalidity and dedicated the claims to the public. That is very telling with respect to the validity of the same claimed subject matter here. Complainants' overreaching to try to capture Respondents' accused products ensnares anticipating prior art (including that which caused Complainants to not even defend the validity of the same subject matter of the claims here) and eviscerates the already flimsy distinctions Complainants proffered against these damning references. The claims are anticipated and rendered obvious by multiple prior art references.

Finally, Complainants have failed to establish an economic domestic industry. The DI Products are not manufactured in the U.S. and the evidence will show that most if not all R&D leading to them was performed outside the United States. The alleged remaining activities that Complainants rely on are so vague that Complainants' have failed to carry their burden that they

[redacted]

are cognizable. And if only investments after the patent issued are cognizable, Complainants' economic DI case fails because they did not even attempt to isolate and calculate those investments.

For these reasons and those that follow, Respondents have not committed any violation.

A. PROCEDURAL HISTORY

On March 13, 2024 Complainants sued alleging that RingConn and Ultrahuman infringe the '178 Patent by importing and selling the RingConn Accused Products and Ultrahuman Accused Products, respectively. On April 12, 2024, the Commission instituted this Investigation. The ALJ scheduled an evidentiary hearing from December 11-17, 2024, and set an initial determination date of April 18, 2025. The Commission is scheduled to issue a final determination by the target date of August 18, 2025.

B. THE PARTIES

1. Complainants

Ouraring, Inc. and Ōura Health Oy (collectively, "Complainants") are Complainants in this Investigation. Ouraring, Inc. is a Delaware corporation and is principally located in San Francisco, California. Ōura Health Oy is a Finnish company principally located in Finland. Ouraring, Inc. is a wholly owned subsidiary of Ōura Health Oy.

While Oura currently owns the '178 Patent, the technology described therein comes from a now-defunct company called Motiv. After struggling to make inroads for years, Motiv was acquired by a security company called Proxy in April 2020.[1] But Proxy fared no better in the

[1]Proxy, *Proxy Acquires Smart Ring Startup Motiv, Sparking Paradigm Shift in How People Use Wearables to Interface with Physical World*, GLOBENEWSWIRE (Apr. 27, 2020), https://www.globenewswire.com/news-release/2020/04/27/2022604/0/en/Proxy-Acquires-Smart-Ring-Startup-Motiv-Sparking-Paradigm-Shift-in-How-People-Use-Wearables-to-Interface-with-Physical-World.html.

[redacted]

market than Motiv, and it too, was acquired by a competitor: Oura in May 2023.[2] In other words, Oura developed ***none*** of the technology described in the '178 Patent, and it is simply asserting a patent from a portfolio that passed from one struggling company to another—and finally to Oura for a mere [redacted].

Rather than compete on the merits of its products, Oura has turned to mining the Motiv portfolio to generate patent assertion candidates. After obtaining the Motiv portfolio from Proxy, Oura requested expedited, track one prosecutions for the applications that would mature into the '178 and '179 Patents. Once those patents issued, Oura filed the instant ITC case. Oura also claimed for the first time in its ITC complaint that its products embody the technology claimed in those patents, notwithstanding that Oura had no hand in developing Motiv's technology and its role during prosecution amounted to little more than naming itself as assignee and requesting expedited prosecution.

The story has recently taken a twist. After rushing multiple continuation patents through the USPTO, Oura recently ***disclaimed*** many of them after Samsung challenged their validity in a series of eleven PGRs and IPRs. One of these patents is the '179 Patent, which Oura once asserted here and contends recites the "same subject matter" as the '178 Patent. *Oura Health OH v. Circular SAS*, No. 6:22-cv-478-ADA, ECF No. 47 (W.D. Tex. April 22, 2024; *see id.* at 6 ("The '178 and '179 Patents in the ITC Action are directed to wearable electronic devices with a plurality of sensors (i.e., electronic parts) that are included within the wearable electronic devices."). Another is U.S. Patent No. 11,599,147, to which both the '178 and '179 Patents are continuations. And yet

[2] *ŌURA Acquires Proxy in All-Equity Deal*, ŌURA (May 9, 2023), https://ouraring.com/blog/oura-acquires-proxy/?srsltid=AfmBOoqqa9Yf6xZYtk3Nyrcjt7jwKU4vh-Yh3GQwVRfSvbU9Rvt-Vl2y.

another is U.S. Patent No. 10,893,833, which Oura has asserted against Respondents in the now-stayed companion district court cases.

Oura's decision to self-invalidate is not without consequence—under *Ohio Willow*, the '178 Patent should now be deemed invalid because it presents no materially different questions of validity than those Oura surrendered in view of the Samsung PGRs and IPRs. *See infra* Part VII.A.

2. Respondents

RingConn and Ultrahuman are Respondents in this Investigation.

(a) RingConn Respondents

The RingConn respondents include RingConn LLC and Shenzhen Ninenovo Technology Limited. RingConn LLC is incorporated in Delaware and is principally located in Delaware. Shenzhen Ninenovo Technology Limited is incorporated under the laws of the People's Republic of China and is principally located in Shenzhen, China. Shenzhen Ninenovo Technology Limited is the parent company of RingConn LLC.

RingConn is at the forefront of innovation and design with its smart rings. The company was officially formed in 2021, although with a foundation based on years of research and development dating back to 2014 and 2015. Wang Tr. at 12:2-17. During this time, Min Wang the current Vice President, Hardware Product Development at RingConn, developed and published a series of papers describing his research. RX-0219; RX-0220; RX-0221; RX-0222. Since RingConn was founded, RingConn has devoted significant resources into research and development of the smart ring. RX-0215; RX-0216; RX-0217; RX-0218. RingConn began selling its first generation Smart Ring in 2023 and released its second generation smart ring a year later 2024. Wang Tr. 10:13-11:1; RX-0049. RingConn's current product is the thinnest and lightest smart ring on the market and it has the longest battery life at 10-12 days. RX-0049. RingConn's products are the only smart rings that are able to detect a sudden stoppage of breath, or sleep apnea;

and the only smart ring in the U.S. that is able to continuously and accurately measure arterial oxygen saturation. Wu Tr. at 72:19-73:19. RingConn is also at the forefront of using its smart rings for medical applications with two pending Premarket Approval applications with the FDA. Wu Tr. 78:10-82:13; CX-0017C.

(a) Ultrahuman Respondents

Ultrahuman Healthcare Pvt. Ltd. is an Indian Non-Government Company incorporated in India principally located in Bangalore, India. Ultrahuman Healthcare SP LLC and Ultrahuman Healthcare Ltd. are wholly owned subsidiaries of Ultrahuman Healthcare Pvt. Ltd. Ultrahuman Healthcare SP LLC is incorporated under the laws of the United Arab Emirates and is principally located in Abu Dhabi, UAE. Ultrahuman Healthcare Ltd. is incorporated under the laws of the United Kingdom and is principally located in London, United Kingdom. Ultrahuman also has manufacturing facilities in Texas, which will soon manufacture all of its ring products for the US market. JX-0011C.0018 at 67:14-69:15.

Since its founding in 2019, Ultrahuman has had the twin goals of resolving the problem of fragmented health data and addressing worldwide health and welfare concerns. JX-0011C.0004-0005 at 13:7-14:14. To further this mission, Ultrahuman has developed and launched a suite of products—including both glucose monitors, rings, and home health monitors[3]—with many more in the pipeline. In contrast to Oura, Ultrahuman does not use a mandatory subscription-based business model, which would require users to make recurring monthly payments to access product features they already paid for and their own user data. Instead, following purchase, Ultrahuman's customers have complete access to every core product feature and all of their user data for as long as they use the product.

[3] https://www.ultrahuman.com/home/

Ultrahuman's innovative technology integrates glucose, sleep, movement, stress, blood markers, and heart rate variability (HRV) data, offering a comprehensive approach to health monitoring in one platform. Ultrahuman's first product, released in July 2021, is its M1 system that integrates with a continuous glucose monitor, providing real-time feedback via a mobile application on glucose levels and metabolic data measured with a glucose monitor. Ultrahuman has continued to improve this product since its release, and it remains highly successful to this day.

Ultrahuman's next product was its Ultrahuman Ring (R1) product. JX-0011C.0005 at 16:22-17:20. JX-0011C.0006 at 19:6-21:16. Simultaneously, . JX-0011C.0020 at 74:9-18.

Ultrahuman created the design and functionality of its R1 ring without any awareness or use of the '178 Patent. The R1 prototype was designed and developed in Bangalore, India . JX-0011C.0006-0007 at 21:17-20, 24:20-24. . JX-0011C.0006 at 21:21-24. Nor did Ultrahuman have access to '178 Patent materials, designs, or proprietary technology in the course of the original Ultrahuman Ring development.

Ultrahuman launched its second generation ring, the Ring AIR, in June 2023, with the tagline "World's lightest smart ring." The Ultrahuman Ring AIR is lightweight and accurately

measures sleep, heart rate variability, movement, stress, temperature, and other crucial biomarkers. JX-0011C.0022 at 84:6-19. It has the ability to work in conjunction with Ultrahuman's M1 device to provide tailored insights into a person's unique metabolic need. Unlike the sleep-tracking Oura Ring, the Ring AIR is a metabolism-tracking platform and thus takes in more signals over the human body (e.g., glucose, sleep, resting heart rate, movement, and blood markers). JX-0011C.0011 at 41:2-16. It is also lighter and more comfortable to wear than the Oura Ring. JX-0011C.0011 at 41:17-19. Ultrahuman has filed multiple FDA registrations for its Ring AIR, including one focused on women's health.[4] Like the R1 ring, Ultrahuman developed the Ring AIR without copying Oura's ring products or the '178 Patent.

Following Ultrahuman's success with its metabolic health tracking technology, Oura acquired Veri in 2024 to add metabolic tracking capabilities to Oura's platform[5]—emblematic of how Oura has had to continually play catch-up to the true innovators in the market.

II. LEGAL STANDARDS

A. Invalidity

1. Anticipation – 35 U.S.C. § 102(a)

Under Section 102, "[a] patent is invalid for anticipation if a single prior art reference discloses each and every limitation of the claimed invention." *Schering Corp. v. Geneva Pharm., Inc.*, 339 F.3d 1373, 1377 (Fed. Cir. 2003) (citations omitted); *In re Gamble*, 2021-1848, 2022 WL 151986, at *2 (Fed. Cir. Jan. 18, 2022) ("A prior art reference anticipates a patent's claim when the four corners of that document describe every element of the claimed invention, either expressly or

---

[4] https://blog.ultrahuman.com/blog/ultrahuman-introduces-groundbreakingpregnancy-insights-on-the-ring-air/

[5] *See* Jessica Hagen, *Smart ring maker Oura acquires metabolic health company Veri*, MOBIHEALTHNEWS (Sep. 12, 2024), https://www.mobihealthnews.com/news/smart-ring-maker-oura-acquires-metabolic-health-company-veri

inherently, such that a person having ordinary skill in the art could practice the invention without undue experimentation.") (cleaned up). For a patent to be deemed invalid based on anticipation under 35 U.S.C. § 102, a party must prove by clear and convincing evidence that each and every element of a patent claim is disclosed, either expressly or inherently, in a single piece of prior art. *See Celeritas Techs., Ltd. v. Rockwell Int'l Corp.*, 150 F.3d 1354, 1360 (Fed. Cir. 1998).

2. Obviousness – 35 U.S.C. § 103

Under Section 103, a patent is invalid as obvious if "the differences between the subject matter sought to be patented and the prior art are such that the subject matter as a whole would have been obvious at the time the invention was made to a person having ordinary skill in the art to which said subject matter pertains." 35 U.S.C. § 103(a).

The key inquiry in determining the differences between the claimed invention and the prior art is whether an apparent reason exists to combine known elements in the fashion claimed by the patent at issue. *See KSR Int'l Co. v. Teleflex, Inc.*, 550 U.S. 398, 417–18 (2007). When a respondent relies on a combination of multiple prior art references to show obviousness, "the burden falls on the patent challenger to show by clear and convincing evidence that a person of ordinary skill in the art would have had reason to attempt to make the composition or device, or carry out the claimed process, and would have had a reasonable expectation of success in doing so." *PharmaStem Therapeutics, Inc. v. ViaCell, Inc.*, 491 F.3d 1342, 1360 (Fed. Cir. 2007) (citations omitted).

Obviousness is a question of law based on underlying determinations of fact. *Star Sci., Inc. v. R.J. Reynolds Tobacco Co.*, 655 F.3d 1364, 1374 (Fed. Cir. 2011). The factual determinations underlying a finding of obviousness include: (1) the scope and content of the prior art, (2) the level of skill in the art, (3) the differences between the claimed invention and the prior art, and (4)

secondary considerations of non-obviousness. *KSR*, 550 U.S. at 399 (citing *Graham v. John Deere Co.*, 383 U.S. 1, 17 (1966)).

Obviousness is determined through the lens of a person of ordinary skill in the art ("POSA"). 35 U.S.C. § 103. The definition of a POSA is a factual determination under the second *Graham* factor. 383 U.S. at 17-18. A POSA is "a person of ordinary creativity, not an automaton." *KSR*, 550 U.S. at 421. When the prior art at issue is in the same field as the claimed invention, the POSA is presumed to know all of the art, "hanging on the walls around him." *In re Winslow*, 365 F.2d 1017, 1020 (C.C.P.A. 1966), as modified by *In re Antle*, 444 F.2d 1168, 1172 (C.C.P.A. 1971).

The obviousness analysis guards against extending patent protection to "advances that would occur in the ordinary course without real innovation," because doing so would slow "progress and may, in the case of patents combining previously known elements, deprive prior inventions of their value or utility." *KSR*, 550 U.S. at 402, 419. Accordingly, the "combination of familiar elements according to known methods is likely to be obvious when it does no more than yield predictable results." *Id*. at 416. "If a [POSA] can implement a predictable variation, § 103 likely bars its patentability." *Id*. at 417. Indeed, when there is a "design need or market pressure to solve a problem and there are a finite number of identified, predictable solutions, a person of ordinary skill has good reason to pursue the known options within his or her technical grasp" because the result "is likely the product not of innovation but of ordinary skill and common sense." *Id*. at 421.

Secondary considerations of non-obviousness include commercial success, long felt need, copying, and the failure of others. *Id*. at 399. For secondary considerations to be given substantial weight in an obviousness analysis, there must be a nexus between the evidence and the merits of the claimed invention. *See W. Union Co. v. MoneyGram Payment Sys. Inc.*, 626 F.3d 1361, 1372–

73 (Fed. Cir. 2010) (citation omitted). The patentee bears the burden of showing that a nexus exists. *Fox Factory, Inc. v. SRAM, LLC*, 944 F.3d 1366, 1373 (Fed. Cir. 2019). "A showing of nexus can be made in two ways: (1) via a presumption of nexus, or (2) via a showing that the evidence [of secondary considerations] is a direct result of the unique characteristics of the claimed invention." *Volvo Penta of the Americas, LLC v. Brunswick Corp.*, 81 F.4th 1202, 1210 (Fed. Cir. 2023). Essentially, there must be a "link" between the secondary considerations and the "features of [the claimed] invention that were not disclosed in" the prior art. *Asyst Techs., Inc. v. Emtrak*, Inc., 544 F.3d 1310, 1316 (Fed. Cir. 2008). Moreover, "evidence of secondary considerations does not always overcome a strong prima facie showing of obviousness." *Id*. A nexus between secondary considerations associated with a product and a patent claim can be presumed if the product practices and is co-extensive with the claim. *Brown & Williamson Tobacco Corp. v. Philip Morris Inc.*, 229 F.3d 1120, 1130 (Fed. Cir. 2000) (explaining that a presumption that commercial success is due to the patented invention applies "if the marketed product embodies the claimed features, and is coextensive with them."). Nexus is not presumed, however, if the product is not co-extensive with the claimed features, such as when the product includes substantial unpatented features and/or features known in the prior art. *See e.g.*, *Ethicon Endo-Surgery, Inc. v. Covidien LP*, 812 F.3d 1023, 1034 (Fed. Cir. 2016) (explaining that there is no nexus between commercial success and patent claims where "nonpatented features and features known in the prior art underlay the commercial success.").

B. Direct Infringement – Literal

The complainant bears the burden of proving infringement by a preponderance of the evidence. *See Spansion, Inc. v. Int'l Trade Comm'n*, 629 F.3d 1331, 1349 (Fed. Cir. 2010). A finding of infringement requires "sufficient evidence to prove that the accused product or process

contains, either literally or under the doctrine of equivalents, every limitation of the properly construed claim." *Seal-Flex, Inc. v. Athletic Track and Court Constr.*, 172 F.3d 836, 842 (Fed. Cir. 1999).

Pursuant to Section 271(a), "whoever without authority makes, uses, offers to sell, or sells any patented invention, within the United States or imports into the United States any patented invention during the term of the patent therefor, infringes the patent." 35 U.S.C. § 271(a). Literal infringement is a question of fact. *Finisar Corp. v. DirecTV Grp., Inc.*, 523 F.3d 1323, 1332 (Fed. Cir. 2008).

There are two steps in determining infringement: "[f]irst, the claim must be properly construed to determine its scope and meaning. Second, the claim as properly construed must be compared to the accused device or process." *Gen. Am. Transp. Corp. v. Cryo-Trans, Inc.*, 93 F.3d 766, 769 (Fed. Cir. 1996).

Significantly, "a device does not infringe simply because it is possible to alter it in a way that would satisfy all the limitations of a patent claim." *High Tech Medical Instrumentation, Inc. v. New Image Industries, Inc.*, 49 F.3d 1551, 1555 (Fed. Cir. 1995); *see also Golden v. Samsung Elecs. Am., Inc.*, No. 2023-2120, 2024 WL 539973, at *3 (Fed. Cir. Feb. 12, 2024).

C. Direct Infringement – Doctrine of Equivalents

Under the doctrine of equivalents, "a product or process that does not literally infringe upon the express terms of a patent claim may nonetheless be found to infringe if there is 'equivalence' between the elements of the accused product or process and the claimed elements of the patented invention." *Warner-Jenkinson Co., Inc. v. Hilton Davis Chem. Co.*, 520 U.S. 17, 21 (1997). Equivalence can be determined by assessing whether there are "insubstantial differences" between the accused device and the limitation at issue in the claims. *Dawn Equip. Co. v. Kentucky*

Farms Inc., 140 F.3d 1009, 1015-16 (Fed. Cir. 1998). Equivalents can also be determined under the "function-way-result test," whereby "one considers whether the element of the accused device at issue performs substantially the same function, in substantially the same way, to achieve substantially the same result, as the limitation at issue in the claim." *Id*. at 1016.

D. Domestic Industry

The complainant must establish that a domestic industry exists or is in the process of being established for articles protected by the asserted patents. *See* 19 U.S.C. §1337(a)(1)-(2). The complainant bears the burden of showing "by a preponderance of the evidence that the domestic industry requirement is satisfied." *Certain Compact Fluorescent Reflector Lamps, Products Containing Same and Components Thereof*, Inv. No. 337-TA-872, ID at 40 (Feb. 3, 2014) (citation omitted). "[T]he domestic industry is defined by the patented article." Certain Magnetic *Tape Cartridges and Components Thereof*, Inv. No. 337-TA-1036, ID at 178, (Jan. 25, 2018) (citation omitted). In this case, "article" refers to "an article of commerce, i.e., a product for sale in the market place." *Certain Non-Volatile Memory Devices and Products Containing Same*, Inv. No. 337-TA-1046, ID at 146 (Apr. 27, 2018). The Commission generally assesses a complainant's domestic industry as of the time the complaint is filed. *Motiva, LLC v. Int'l Trade Comm'n*, 716 F.3d 596, 600-01 (Fed. Cir. 2013). Domestic industry has two prongs: a technical prong and an economic prong.

1. Technical Prong

To meet the requirements of the technical prong, a complainant must show by a preponderance of the evidence that its own article or an article of its licensee practices a valid claim of each asserted patent. *Certain Vision-Based Driver Assistance System Cameras and Components Thereof*, Inv. No. 337-TA-907, Comm'n Op. at 36 (Dec. 1, 2015) ("Section 337 requires that the domestic industry is related to an 'article protected by the patent,' and an invalid

[redacted]

patent cannot protect any articles."); *Microsoft Corp. v. Int'l Trade Comm'n*, 731 F.3d 1354, 1362 (Fed. Cir. 2013). The test for satisfying this prong is essentially the same for infringement, and entails a comparison of the asserted domestic industry products to the patent claims. *Alloc, Inc. v. Int'l Trade Comm'n*, 342 F.3d 1361, 1375 (Fed. Cir. 2003).

2. Economic Prong

To satisfy the economic prong, Section 337(a)(3) identifies the following criteria for determining the existence of a domestic industry:

(A) significant investment in plant and equipment;

(B) significant employment of labor or capital; or

(C) substantial investment in its exploitation, including engineering, research and development, or licensing. 19 U.S.C. §1337(a)(3).

Meeting any one of these criteria is sufficient to meet the economic prong of domestic industry. *Certain Printing and Imaging Devices and Components Thereof*, Inv. No. 337-TA-690, Comm'n Op. at 26 (Feb. 17, 2011) (EDIS Doc. ID 444708); *InterDigital Communications, LLC v. Int'l Trade Comm'n*, 707 F.3d 1295, 1303, n.4 (Fed. Cir. 2013).

To show significant investment in plant and equipment under Section 337(a)(3)(A) or significant employment of labor or capital under Section 337(a)(3)(B), a complainant must show investments in the United States specific to articles protected by the asserted patents. *InterDigital Commc'n, LLC v. Int'l Trade Com'n*, 707 F.3d 1295, 1297-98 (Fed. Cir. 2013).

To show substantial exploitation of the patents through engineering, research and development, or licensing, under Section 337(a)(3)(C), a complainant must show a nexus between the investments made in the United States and the asserted patents. *Certain Integrated Circuit Chips and Products Containing the Same*, Inv. No. 337-TA-859, Comm'n Op., at 42-43 (Aug. 22, 2014) ("[T]here may be circumstances in which the domestic investment is so unrelated to the

asserted patent that no nexus can be imputed."). Indeed, "a complainant must demonstrate a sufficiently focused and concentrated effort to lend support to a finding of a substantial investment." *Certain Electronic Devices, Including Mobile Phones, Portable Music Players, and Computers*, Inv. No. 337-TA-701, ID at 5 (Nov. 18, 2010) (unreviewed). Although it is not necessary for a complainant to provide precise accounting of its investments and how they are directed to a patented article (*see Certain Stringed Musical Instruments and Components Thereof*, Inv. No. 337-TA-586, Comm'n Op. at 26 (May 16, 2008)), a complainant must provide sufficient detail to show that its investments are directly tied to the actual product asserted to practice the patents. *See Certain Polyimide Films, Products Containing Same, and Related Methods*, Inv. No. 337-TA-772, ID at 277-80 (May 10, 2012) (unreviewed in relevant part) (rejecting investments because "the financial figures cited by [complainant] cover both products alleged to practice the patents and products wholly unrelated to this investigation"). Similarly, investments in components that are marketed and sold separately from the domestic industry product that "are not central to enabling [complainant] to exploit the patented technology" may not count toward the domestic industry requirement. *See Certain Sleep-Disordered Breathing Treatment Systems and Components Thereof*, Inv. No. 337-TA-890, Final ID at 147 (Sept. 16, 2014) (unreviewed in relevant part).

To assess the merit of a complainant's alleged domestic industry, its alleged investments must be examined in context. *See Certain Printing and Imaging Devices*, Comm'n Op. at 31 (explaining that the domestic industry requirement of Section 337 is governed by "the generally applicable principle that whether an investment is 'substantial' or 'significant' is context dependent."). The contextual significance may depend on whether the alleged investments "are directed to the practice of one or more claims of the asserted patent." *Id*. at 28. And the Commission

may assign less weight to investments having only an "indirect bearing on the patented features" of the protected article. *Id*.

E. Prosecution History Estoppel

Prosecution history estoppel can occur in two ways: "either (1) by making a narrowing amendment to the claim ('amendment-based estoppel') or (2) by surrendering claim scope through argument to the patent examiner ('argument-based estoppel')." *Conoco, Inc. v. Energy & Envtl. Int'l, L.C.*, 460 F.3d 1349, 1363 (Fed. Cir. 2006). To invoke argument-based estoppel, "the prosecution history must evince a clear and unmistakable surrender of subject matter." *Id.* at 1364. "[W]here a patent applicant sets forth multiple bases to distinguish between its invention and the cited prior art, the separate arguments [can] create separate estoppels as long as the prior art was not distinguished based on the combination of these various grounds." *Amgen Inc. v. Coherus BioSciences Inc.*, 931 F.3d 1154, 1159 (Fed. Cir. 2019). "Statements made by a patent owner during an IPR proceeding, whether before or after an institution decision, can be considered for claim construction and relied upon to support a finding of prosecution disclaimer." *Aylus Networks, Inc. v. Apple Inc.*, 856 F.3d 1353, 1362 (Fed. Cir. 2017). To determine whether prosecution disclaimer applies, Courts "consider whether [the patent owner's] statements constitute a clear and unmistakable surrender of claim scope." *Aylus Networks, Inc. v. Apple Inc.*, 856 F.3d 1353, 1362 (Fed. Cir. 2017).

III. CLAIM CONSTRUCTION

The ALJ held a Markman hearing on August 15, 2024 and issued an order construing claim terms on October 23, 2024. The parties agreed on the following constructions:

[redacted]

Claim Term	Construction
"A finger-worn wearable ring device" Claim 1 preamble	The preamble is limiting
"[positioned / configured to fit] within a cavity" Claim 1	Plain and ordinary meaning, which is "[positioned/configured to fit] within a hollow space"
"[the internal housing component] coupled with [the external housing component]" Claim 1	Plain and ordinary meaning, which is "[the internal housing component] is connected with [the external housing component]"

JX-0009. The parties provided the following proposed constructions prior to the hearing:

Term	Complainants	RingConn's Construction	Ultrahuman	Staff
"an [internal/ external] housing component" Claims 1, 12, and 17	No construction is necessary. This term is self-explanatory within the context of the claims. If a construction is required, it should be the plain and ordinary meaning which is: "an [internal/external] structure that encloses space"	Plain and ordinary meaning, which is "an [internal/extern al] structure that encloses space"	Plain and ordinary meaning, which is "an [internal/ external] enclosing structure comprised of a non-potting material"	Plain and ordinary meaning. No construction necessary. However, if construed: "an [internal/exter nal] structure that encloses space"

[redacted]

Term	Complainants	RingConn's Construction	Ultrahuman	Staff
"circumferential" Claims 1, 17, and 18	No construction is necessary. This term is self-explanatory within the context of the claims. If a construction is required, it should be the plain and ordinary meaning which is: "curved"	Plain and ordinary meaning, which is "circular, ovular, or elliptical"		Plain and ordinary meaning. No construction necessary. However. If construed: "peripheral"

JX-0009. After the hearing, RingConn updated its construction of "an [internal/ external] housing component" to clarify its position as "plain and ordinary meaning, which is 'an [internal/external] structure that encloses, rather than fills, space." JX-0010. The ALJ issued an order construing the following terms:

Claim Term	Construction
"A finger-worn wearable ring device" Claim 1 preamble	The preamble is limiting
"[positioned / configured to fit] within a cavity" Claim 1	Plain and ordinary meaning, which is "[positioned/configured to fit] within a hollow space"
"[the internal housing component] coupled with [the external housing component]" Claim 1	Plain and ordinary meaning, which is "[the internal housing component] is connected with [the external housing component]"
"an [internal/ external] housing component" Claims 1, 12, and 17	Plain and ordinary meaning, which is an [internal/external] structure that encloses space and which does not necessarily exclude potting material.
"circumferential" Claims 1, 17, and 18	Plain and ordinary meaning and does not require a closed shape.

[redacted]

JX-0014. Unless stated otherwise, all other terms in the Asserted Patents have been given their ordinary and customary meaning as would be understood by a person of ordinary skill in the art at the time of the invention (i.e., as of the effective filing date of the patent application).

IV. THE RINGCONN ACCUSED PRODUCTS DO NOT INFRINGE THE '178 PATENT

Complainants' infringement case is a classic example of a patent-holder trying to fit a square peg into a round hole. But despite Complainants' best efforts to do so, they cannot make Respondents' Accused Products fit within the scope of the asserted claims of the '178 Patent. There is a good reason for that—the plain language of the claims of the '178 Patent covers specific embodiments of finger-worn smart devices that are fundamentally and materially different than Respondents' Accused Products.

In particular, the claims of the '178 Patent (the metaphoric "round hole") cover a ***double-enclosure housing*** configuration and a cavity (construed to mean a "hollow space") formed between the two housing components. The claims further require components (i.e., a battery and PCB) positioned and sized and shaped to fit within the hollow space between the two housing components. Figure 15 of the '178 Patent—annotated below—is one of the claimed embodiments of the '178 Patent. It includes "an internal housing **1512** and an external housing **1514**" where "components **1550** are" positioned and sized and shaped to fit "within [a hollow] space defined between the housings." '178 Patent at 20:30-48.

[redacted]

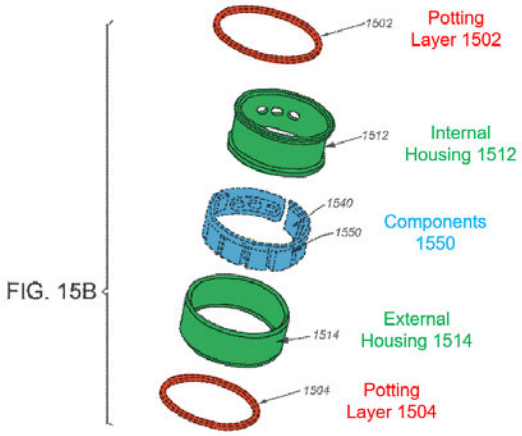

JX-0001 at Fig 15B.

In stark contrast, Respondents' Accused Products (the metaphoric "square peg") [redacted].

[redacted]

As these images illustrate, RingConn's Accused Products do not infringe for several reasons, including the following:

[redacted]

- **No internal and external housing components:** RingConn's Accused Products [redacted].
- **No PCB and cavity disposed/formed between two housing components:** Even if the potting material could be considered an "internal housing component" that encloses space (which it cannot), such a read does not work because the claims also require that the PCB and cavity be disposed "between" the two housing components. [redacted].
- **No cavity:** [redacted].

- **No battery positioned and shaped and sized to fit within a cavity:** The plain language of the asserted claims require that the battery be "positioned" within a cavity and "shape[d] and size[d] … to fit with the cavity." This means that the cavity must exist independently of the battery so that the battery can be positioned and sized and shaped to fit within it. In other words, the battery cannot define or dictate the shape of the cavity. Rather, the cavity dictates the size and shape of the cavity. [redacted].
- **No cavity between circumferential surfaces:** The asserted claims require that the cavity be "between the outer circumferential surface of the external housing component and the inner circumferential surface of the internal housing component." But Complainants do not dispute that their alleged cavity extends between planar surfaces.
- **No circumferential surface:** The asserted claims require that the internal housing component defin[e] an inner circumferential surface of the finger-worn wearable ring device. The inner surface of the ring, however, includes a flat (i.e. not circumferential) portion and bumps and that surface is not circumferential. Complainants' assertion that the inner circumferential surface is only the area where the battery is, is also not how a POSITA would understand the term.

Complainants have tried mightily to figure out ways to get all four corners of the square peg to fit into the round hole. In doing so, Complainants have even had to materially change their infringement theories multiple times to try to find a theory that works for them—including after submitting their opening expert report on infringement—but have failed. Complainants' current infringement theory has twisted and tortured the claim language so badly that what is now allegedly infringing is no longer even recognizable to the '178 Patent. The current infringement read is nonsensical, unsupported by any disclosure in the '178 Patent, and borders on absurdity. Making matters worse, Complainants' current infringement read is wholly inconsistent with and undermined by the positions they take on invalidity. In short, Complainants strained and tortured application of the claims to the Accused Products and DI Products should be rejected.

A. Asserted Claims of the '178 Patent

The '178 Patent includes only one independent claim, and it reads as follows:

1. A finger-worn wearable ring device, comprising:
   an external housing component defining an outer circumferential surface of the finger-worn wearable ring device;
   an internal housing component defining an inner circumferential surface of the finger-worn wearable ring device, the internal housing component coupled with the external housing component, wherein at least a portion of the inner circumferential surface of the internal housing component is configured to contact a tissue of a user when the finger-worn wearable ring device is being worn by the user;
   a battery positioned within a cavity formed between the internal housing component and the external housing component, wherein **the battery comprises a shape and size configured to fit within the cavity** between the outer circumferential surface of the external housing component and the inner circumferential surface of the internal housing component, and wherein the battery extends through at least a first portion of the cavity of the finger-worn wearable ring device;
   a printed circuit board disposed between the internal housing component and the external housing component, wherein the printed circuit board extends through at least a second portion of the cavity of the finger-worn wearable ring device different from the first portion; and

[redacted]

one or more sensors electrically coupled with the printed circuit board and the battery and configured to acquire data from the user through the internal housing component.

The term "housing component" has been construed to mean "a structure that encloses space." Order No. 17 at 14. The term "cavity" has been construed to mean "a hollow space." *Id.* at 5. Importantly, by the express language of the claim, the cavity is a hollow space that exists and is defined independently of the battery. The claim language makes this clear when it recites that the battery is "***positioned*** within the cavity" and is of a "***size and shape configured to fit within the cavity***." If the claims require that the battery is "positioned within the cavity," and that the battery be "size[d] and shape[d] … to fit within the cavity," then that cavity that is the hollow space must be defined and exist independently of the battery so that the battery can be "positioned" and "size[d] and shape[d] … to fit" within it. In other words, the claimed battery cannot define the cavity or dictate it's shape because the claims require a cavity in which the battery "is positioned" and "size[d] and shape[d]" to fit.

B. Disclosed Embodiments of the '178 Patent Claims

The '178 patent discloses several embodiments that have internal and external housing components and a cavity formed between the housing components. For example, Figures 8 and 15B are shown below.

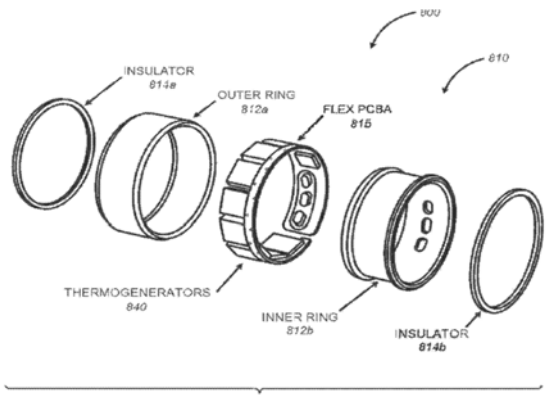

FIG. 8

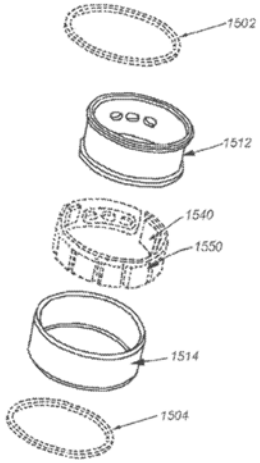

FIG. 15B

[redacted]

As illustrated, these embodiments comprise the claimed elements, including:

- an "external housing component" ("external housing" 1524 and "outer ring" 812a) that encloses space;
- an "internal housing component" ("internal housing" 1512 and "inner ring" 812b) that encloses space;
- an unnumbered "cavity formed between the internal housing component and the external housing component" that is a hollow space and that exists independently of the internal ring components (e.g., the battery) and is not defined by those components; and
- components (e.g., "PCB' 1540, "Flex PCBA" 815 and "thermogenerators" 840) "positioned within the cavity" that are of a "size and shape configured to fit within the cavity."

While the descriptions of Figures 12D, 12E and 14E are not entirely clear, the Figures alone may be said to disclose additional embodiments:

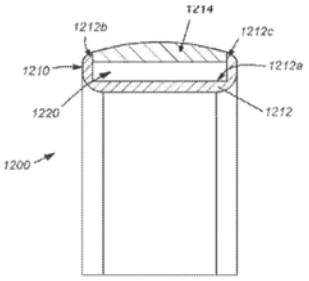

FIG. 12D

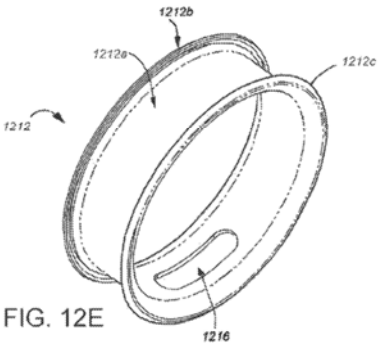

FIG. 12E

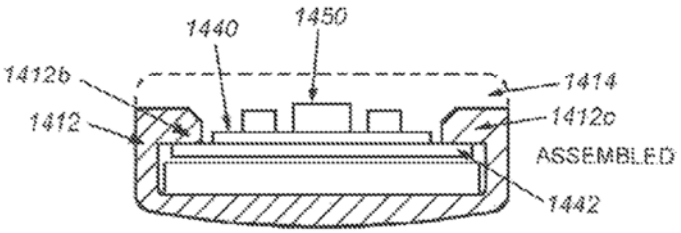

FIG. 14E

While RingConn disputes that potting material can be used as housing component—at least as a practical matter—it does understand that the claim construction does not foreclose that possibility. Accepting that claim construction for purposes of this brief, it is possible that these Figures show further embodiments of the claims. As illustrated, these embodiments include:

- an external potting 1214 and 1414 that appears to enclose space (e.g., 1220 in Figure 12)—in the Figures, that space appears to be hollow;
- an "internal housing component" (internal housing 1212, 1412) that encloses space (e.g., 1220 in Figure 12);
- a "cavity formed between the internal housing component and the external housing component" that is a hollow space existing independently of the internal ring components (e.g., the battery) and not defined by those components; and
- in Figure 12, a hollow "internal space 1220… accommodate[s] one or more components" that are positioned and of a size and shape to fit within the hollow space between the internal and external housing components. '178 Patent at 18:15-18. In Figure 14, "flexible circuit 1440 is … within the internal space 1420." *Id.* at 20:14-15.

In each of the foregoing embodiments, the final assembled device includes dual-enclosing structures, a hollow space (i.e., a cavity) that is defined and exists independent of any components, and components (e.g., a battery) positioned and sized and shaped to fit within the independently defined cavity / hollow space.

Significantly, ***both*** private parties assert that the '178 Patent discloses embodiments that are ***not*** covered by the Asserted Claims. That is not uncommon or unusual. For example, the embodiment disclosed in Figure 13—reproduced below—is not covered by the claims of the '178 Patent.

[redacted]

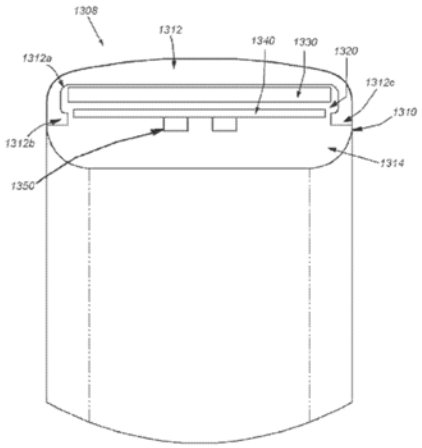

FIG. 13

Figure 13 is a single-enclosure housing embodiment as opposed to a double-enclosure housing embodiment. More specifically, the '178 Patent discloses that the embodiment shown in Figure 13 "includes an external housing **1312** and an internal potting or encapsulant **1314**." '178 Patent at 18:65-67. Importantly, ***only*** the external housing is disclosed as a component that encloses space: "the external housing includes flanges **1312b-c** that extend toward each other … to define a ***partially*** enclosed internal space **1320**." *Id.* at 19:3-6 (emphasis added). That is a critical part of the disclosure because it makes it clear that this embodiment includes only a space that is "***partially*** enclosed." And the ***only*** component responsible for the partial enclosing is external housing 1312. Thus, the '178 Patent expressly recognizes that the potting material **1314** does not enclose anything—if it did, it would ***not*** have described space 1320 as only "partially" enclosed, but rather as enclosed or fully enclosed. The '178 Patent therefore expressly recognizes that the potting material is used to "encapsulate[]" the components (*id* at 19:12-13), thus filling the partially enclosed space, which is the opposite of enclosing that space. Accordingly, Figure 13 does not have an internal housing component because there is only one component disclosed as enclosing space, and that is outer housing **1312**.

Moreover, unlike the embodiments discussed above that do fall within the scope of the claims, Figure 13 does not disclose a cavity because there is no hollow space. **1320** is filled and, thus, not hollow. In addition, Figure 13 does not disclose a "cavity formed between [an] internal housing component and [an] external housing component." That is true even if space **1320** is considered a cavity (which it is not because it is not hollow), and internal potting were considered an internal housing component (which it is not). In that scenario space **1320** is not between the external housing **1312** and internal potting **1314**, but rather is completely filled by the potting material and components. Nor is the space occupied by the PCB and battery between the potting material and the external housing—the potting material completely encapsulates the components and the space they occupy such that the space the components occupy is not between the potting material **1314** and the external housing.

For similar reasons, the printed circuit board is not "disposed between [an] internal housing component and [an] external housing component" as required by the claims. Again, that is true even if the internal potting **1314** is considered an internal housing component (which it is not). The PCB is completely encapsulated by the potting material and therefore is not between the potting material and any other component.

Finally, unlike all of the prior embodiments described above, Figure 13 does not disclose a battery "positioned … and shape[d] and size[d] … to fit within" a hollow space as required by the claims. In Figure 13, there is no hollow space that is between any internal and external housing component in which the battery is shaped and sized to fit. Complainants are writing the words "within a cavity" and "shape[d] and size[d] to fit within the cavity" completely out of the claims. Complainants want the claims to simply recite a "battery between the internal and external housing components." But unfortunately for them, the claims recite more: "a battery positioned… and

[redacted]

shape[d] and size[d] to fit within a cavity." Every word in a claim has meaning and here Complainants are ignoring—in fact reading out—significant claim limitations because Respondents' products do not have them. They should not be able to get away with that.

For all of these reasons, Figure 13 is not an embodiment of the claims of the '178 Patent.

C. The Original Owner's First Commercial Product was an Embodiment of the '178 Patent

As discussed *supra*, the Complainants did not invent any of the subject matter of the '178 Patent. A company named Motiv was the original assignor of the alleged inventions claimed in the '178 patent. Complainants ultimately purchased Motiv's IP through multiple transactions. As shown below, Motiv's first design was an embodiment of the '178 patent.

[redacted]

RX-0068; *see also* CX-1101C; RX-0069. In accordance with the claims, and as shown in the image above, the first Motiv designed embodiment included:

- an "external housing component";
- an "internal housing component";
- a "cavity formed between the internal housing component and the external housing component" that is a hollow space existing independently of the internal ring components (e.g., the battery) and not defined by those components;

- a "battery positioned … and … of a shape and size configured to fit within the cavity"; and
- a "printed circuit board disposed between the internal housing component and the external housing component."

D. RingConn's Accused Products are Fundamentally Different From What is Claimed by the '178 Patent

In stark contrast to what is covered by the claims of the '178 Patent, RingConn's Accused Products

As will be shown further below, RingConn's Accused Products are missing several critical limitations recited in the claims of the '178 Patent.

The images below include cross sectional images and an exploded view of the RingConn Accused Products showing how they are fundamentally different from what is claimed by the '178 Patent. The first cross-sectional image is a picture of the RingConn Accused Product after it has been sliced in half to show its internal components. RX-0399 at 10. The second cross-sectional image is a CT scan taken from a cross-section through a side-wall or width of the ring. RX-0169C. And the last image is an exploded schematic of RingConn's Accused Product. RX-0124C.

As these images illustrate, the RingConn Accused Product includes . RingConn's Fact witness . .

[redacted].

Importantly, RingConn's Fact witness will testify [redacted].

[redacted]

RX-0399 at 10 (annotations added). [redacted].

Complainants' own images from their own teardowns . For example, in Complainants' own teardown of the RingConn product they acknowledge

RX-0399; RX-0425C.

As shown below, Complainants

RX-0416C.

Complainants do not dispute that . Indeed, they have filed a separate lawsuit in the District Court of Delaware asserting

RX-0224C, Exhibit D at 16. This is important because if any party argues that —as Complainants did throughout most of this Investigation— .

E. RingConn's Accused Products do not Infringe Independent Claim 1

1. Limitation 1[a]: an external housing component defining an outer circumferential surface of the finger-worn wearable ring device

(a) RingConn's Accused Products do not have an "outer circumferential surface"

Mr. Alarcon will testify

The ALJ stated that "circumferential" was given its plain and ordinary meaning and does not have to be a closed shape. JX-0014. The feature that Dr. Sarrafzadeh opines

[redacted]

[redacted]. RX-0052; RX-0053; RX-0167.

RingConn's prototype design included [redacted]

[redacted]

RX-0054; RX-0055.

RingConn's current design, however, [redacted]. RX-0056; RX-0057; RX-0058.

[redacted]

RX-0056; RX-0057; RX-0058.

Dr. Sarrafzadeh alleges [redacted] Mr. Alarcon will testify [redacted]

[redacted]

[redacted]. *See* Curt von Badinski Tr. at 53:25-54:4 ("[redacted].") This is different function than [redacted]

Furthermore, the RingConn Accused Product's [redacted]

Thus, the RingConn Accused Product does not infringe the limitation of "an external housing component defining an outer circumferential surface of the finger-worn wearable ring device."

[redacted]

2. Limitation 1[b(i)]: an internal housing component defining an inner circumferential surface of the finger-worn wearable ring device

(a) RingConn's Accused Products do not Include an "internal housing component"

Claim 1 of the '178 patent requires "an internal housing component defining an inner circumferential surface of the finger-worn wearable device." The term "internal housing component" has been construed to mean "an internal structure that encloses space." Order No. 17 at 14. RingConn's Accused Products are [redacted]. Complainants are unable to point to anything in RingConn's Accused Products that is an internal structure that encloses space as required by claim 1 of the '178 Patent.

(i) Complainants' Alleged "Internal Housing Component" Has Been a Moving Target and is Materially Different from what they Originally Alleged was the "Internal Housing Component"

It has been such a challenge for Complainants to identify the claimed internal housing component in RingConn's Accused Products that they cannot seem to get their story straight as to what it is.

For most of this case, including in contentions and expert reports, Complainants and their expert Dr. Sarrafzadeh have consistently argued [redacted]. However, after RingConn's Motion for Summary Determination exposed that taking such a position resulted in other claim limitations not being satisfied, both Complainants and Dr. Sarrafzadeh were forced to materially change what they allege is the "internal housing component" to avoid summary determination on those other claim limitations. ***For the first time***, after expert reports had been exchanged, Complainants and Dr. Sarrafzadeh argued that some arbitrary ***portion*** of the potting (as opposed

to the entirety of it) is the internal housing component recited in claim 1 of the '178 Patent. This change in Complainants' and Dr. Sarrafzadeh's contentions marked the point in time when their infringement contentions completely fell apart. Their contentions went from wholly unsupported to unsupported, nonsensical and borderline absurd.

Complainants' original contentions were set forth in their Final Infringement Contentions. There, Complainants argued that the entire potting used in RingConn's Accused Products is the "internal housing component" as is evident from the following annotated image Complainants relied on in those contentions:

RX-0225C at pdf pg. 20.

As shown in this image, . In Dr. Sarrafzadeh's opening infringement report, he likewise alleged ." For example, he included the following images of

Infringement Report at ¶¶ 104 (Ultrahuman), 120 (Oura Gen 3 DI Product). Here again, .

If all of the foregoing were not enough to make clear that Complainants and Dr. Sarrafzadeh were alleging all along that , Dr. Sarrafzadeh's description of the internal housing component does. In his opening expert report, he alleged that "." Infringement Report at ¶ 108.

What Complainants and their experts originally alleged to be an internal housing component is particularly illuminating when reviewing their description of embodiments disclosed in the '178 patent that they allege practice claim 1 of the '178 Patent. For example, Dr. Sarrafzadeh described Figure 13 of the '178 patent as follows:

[redacted]

36. Fig. 13 below shows a cross section of one embodiment of the ring having a housing 1310 that includes an external housing component 1312 and an internal potting or encapsulant 1314 (i.e., internal housing component). *Id.*, 18:64-67. A space 1320 is formed that is occupied by battery 1330 and printed circuit board 1340. *Id.*, 19:6-10.

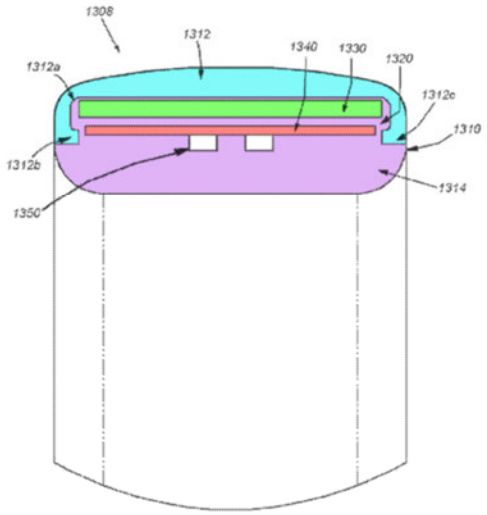

FIG. 13

[redacted] Sarrafzadeh Dep. Tr. at 19:13. Tellingly, [redacted]. Sarrafzadeh Rebuttal at ¶ 22. [redacted]. RX-0411C at ¶ 47.

After Respondents' filed their motion for summary determination, Complainants ran as fast as they could from the contentions they held throughout this investigation as it relates to the

"internal housing component" recited in claim 1. The reason is that Respondents pointed out in their motion for summary determination that if one were to accept In an effort to avoid summary determination, Complainants offered a brand-new contention as it relates to claim 1 of the '178 Patent—the internal housing component is now allegedly just an arbitrary portion of the potting material rather than the entirety of it.

This new theory was revealed by Dr. Sarrafzadeh when he . The image below shows one of Dr. Sarrafzadeh's annotated images where .[6]

[6] Mr. Alarcon Alarcon Supp. Report at ¶ 14 citing RX-0400C, RX-0401C, RX-0339.

[redacted]

[redacted]

RX-0400; RX-0401; RX-0402C.

Herein highlights the challenge of trying to fit a square peg into a round hole. Problems inevitably arise and things get messy. Just when you think you have fit one corner of the square peg into the round hole, the other corners pop out. What Complainants are now left arguing satisfies the limitations of claim 1 is completely unrecognizable to and unsupported by the '178 Patent.

Regardless of whether Complainants are held to their original contention that the entire potting is the internal housing component or they are permitted to argue that an arbitrary portion of the potting is an internal housing component, one thing remains the same: Respondents' Accused Products do not have an internal housing component.

(ii) The RingConn Accused Product's Potting in its Entirety is not an "Internal Housing Component"

If Complainants and Dr. Sarrafzadeh are held to their original infringement theory (i.e., alleging that the entire potting in the RingConn Accused Products is the internal housing component), or if the Staff adopts such a theory, it should be rejected. The potting used in the RingConn Accused Products is not an internal housing component because it is not a structure that

[redacted]

encloses space. It is just the opposite in fact—the potting fills space, which is consistent with its overall function and purpose.

The specification of the ’178 patent makes clear that potting that entirely fills space where the PCB and battery reside does not enclose space. For example, Figure 13 shown below discloses a single-enclosure embodiment. Internal potting **1314** entirely fills the space **1320** where the PCB **1340** and battery **1330** reside.

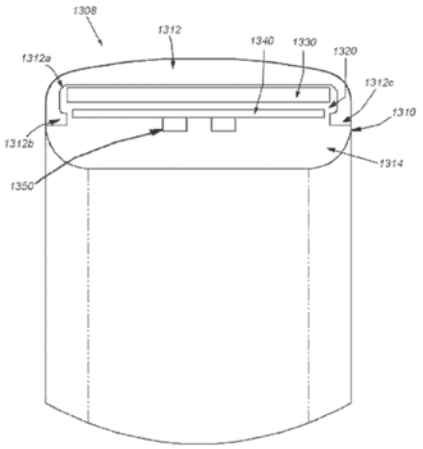

FIG. 13

But the ’178 Patent expressly discloses that internal potting does ***not*** enclose anything, including space **1320**. Rather, the ’178 Patent discloses that space **1320** is only “partially enclosed” and that partial enclosing is performed ***solely*** by external housing 1312: “The external housing includes flanges 1312b-c that extend toward each other, beyond portions of the internal surface **1312a**, to define a ***partially enclosed*** internal space 1320.” ’178 Patent at 19:3-6. When speaking of the internal potting **1312**, the ’178 Patent does not disclose that it encloses anything. In fact, it expressly notes that even after internal potting **1314** is applied, space **1320** is still only partially enclosed: “The internal potting 1314 can extend between flanges 1312b-c and can seal ***partially*** enclosed space **1320**.” *Id.* at 19:10-13. If internal potting **1314** enclosed space, then space 1320 would not be referred to as only “partially enclosed,” but rather enclosed or fully enclosed.

[redacted]

Importantly, while RingConn does not necessarily agree, it recognizes that the claim construction allows for a housing component to be formed of potting material to the extent that is even possible. Figure 12 shown below is an example of potting material **1214** that appears to be enclosing space **1220**, at least as depicted in this figure.

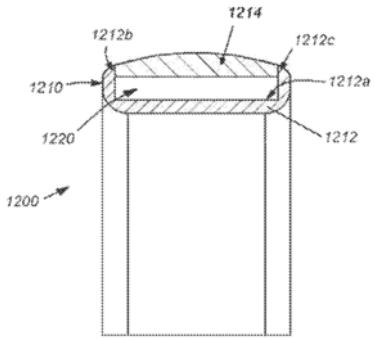

FIG. 12D

In contrast to Figure 13, the potting material in Figure 12 is expressly disclosed as part of what is enclosing space **1220**: "The external potting 1214 can extend between the flanges 1212b and 1212c of the internal housing ***to provide an internal space 1220*** to accommodate one or more components." *Id.* at 18:15-18. Notably, the internal space in this Figure 12 embodiment is not disclosed as only "partially enclosed." Thus, potting material can be a housing component so long as it is enclosing space and not filling it. The Accused RingConn Product comprises potting that fills space. Therefore it is not an internal housing component.

(iii) Complainants' Arbitrary Portion of Potting in RingConn's Accused Product is not an "Internal Housing Component"

[redacted] In particular, at his deposition, Dr. Sarrafzadeh drew the following

[redacted]

annotations [redacted]

[redacted]:

[redacted]

RX-0400; RX-0401; RX-0402C.

Complainants' new argument fails for several reasons.

First, the claims require an "internal housing ***component***", and a ***portion*** of potting material is not a housing ***component***. Complainants and their two experts Dr. Sarrafzadeh and Dr. Rosing seem to agree, at least with respect to unclaimed embodiments of the '178 Patent and the prior art.

For example, Dr. Sarrafzadeh opines that [redacted] Sarrafzadeh Dep. Tr. at 244:5-11 ("[redacted]").

[redacted]

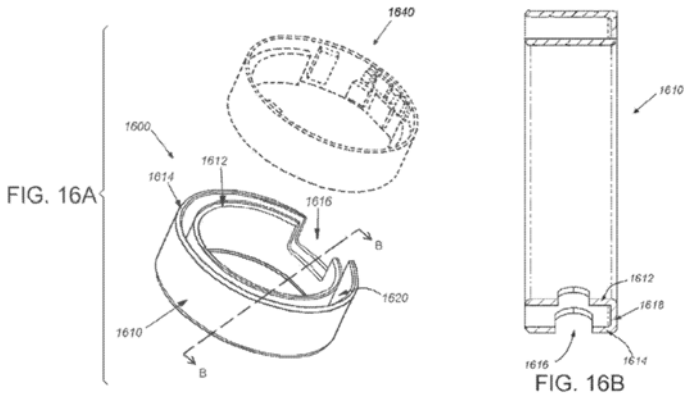

The reason Dr. Sarrafzadeh [redacted] Indeed, Dr. Sarrafzadeh testified that "[redacted]" Sarrafzadeh Dep. Tr. at 251:15-19. He went on to state that "[redacted]." *Id.* at 244:14-19. In his opinion, "[redacted]." *Id.* at 245:1-3. At least with respect to Figure 16, Dr. Sarrafzadeh [redacted]

But Dr. Sarrafzadeh defies his own logic in now arguing that [redacted] Had he applied the same rationale used in his opinions for Figure 16 to the RingConn Accused Products, Dr. Sarrafzadeh [redacted]

[redacted].

Complainants also attempt to distinguish the prior art on the ground that a ***portion*** of a unitary structure cannot be an internal our external housing component. For example, in Complainants' Final Non-Burden Contentions, they allege that "[redacted] RX-0432 at A1 Validity Claim Chart at 2. Similarly, in their Patent Owner's Preliminary Response ("POPR") relating to pending Post Grant Review No. 2024-00030, Complainants argued that prior art reference "Niwa does not disclose or suggest internal and external housing components, as claimed. Rather, Niwa discloses ***a unitary, component-less housing*** 40, shown in Fig. 23[.]" RX-0123 at 52-53. Complainants even criticized Petitioner for "identifying ***sections*** of the unitary housing 40 as being 'components'". *Id.* at 53 Complainants concluded that "Petitioner's interpretation of Niwa reads … 'component' … completely out of the claims." *Id.* These positions simply cannot be reconciled with Complainants' current position that a portion of the potting material in the RingConn Accused Products is an internal housing component.

Second, the specification does not disclose or support any contention that an arbitrary ***portion*** of potting material can be a housing component. Indeed, nowhere in the specification is there any suggestion, hint or even mention of a portion of potting material being anything, let alone a housing component. In fact, when given the opportunity to describe and identify an alleged internal housing component in a figure of the '178 Patent where potting material fills the area where the components reside (i.e., Figure 13), Dr. Sarrafzadeh did not identify a ***portion*** of the potting material as the internal housing component. Instead, as shown below, he called the ***e***[redacted]

[redacted]

[redacted]. *See* Infringement Report at ¶ 36 below.

36. Fig. 13 below shows a cross section of one embodiment of the ring having a housing 1310 that includes an **external housing component 1312** and an **internal potting or encapsulant 1314** (i.e., **internal housing component**). *Id.*, 18:64-67. A space 1320 is formed that is occupied by **battery 1330** and **printed circuit board 1340**. *Id.*, 19:6-10.

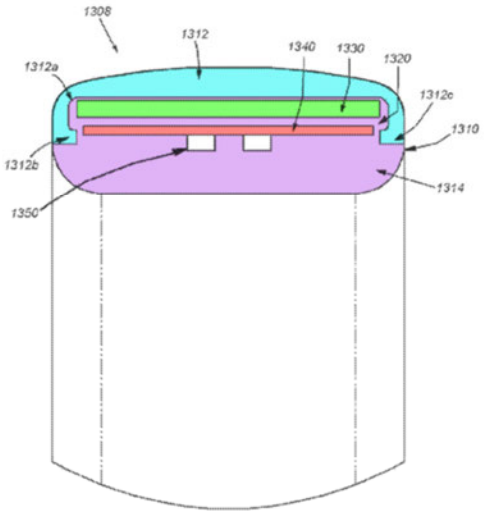

FIG. 13

If Dr. Sarrafzadeh truly believed that the internal housing component in an "external housing—internal potting" embodiment of the type disclosed in Figure 13 is simply a portion of the potting material, he would have certainly identified the internal housing component as such. His decision to identify the entirety of the potting material as the internal housing component as opposed to just some portion of it is fatal to Complainants' new argument regarding the alleged internal housing component.

Third, the arbitrary portion of the potting that Complainants now allege is the internal housing component in not a "structure that encloses space" as required by the ALJ's claim construction. [redacted]

Dr. Sarrafzadeh's opinions regarding the embodiment disclosed in Figure 16 further support Respondents' argument here. He testified that "" Sarrafzadeh Dep Tr. at 249:2-7. A finding that an outer arbitrary portion of a larger, solid structure is a "structure that encloses space," would mean that outer surfaces of any solid objects can be considered a "housing component"—an absurd result. For example, a snowball, and an ice-cube would both be considered to have an outer housing component under Complainants' rationale.

These are the types of arguments one must make when trying to fit a square peg into a round hole. They end up not making sense at all and should be rejected.

(b) The RingConn Accused Products Do Not Have An "Inner Circumferential Surface"

Mr. Alarcon will testify that .

[redacted]

[redacted]

RX-0058C (red annotations added).

[redacted]

Infringement Report at 61 *citing* RX-0167C (red annotations added). Complainants distinguish flat surfaces from not being circumferential. RX-0229C at 4 (Niwa's battery is between a flat

[redacted]

protrusion from the ring shape, which a POSA would understand as not a portion of the outer circumferential surface" citing Niwa Fig. 28).

Complainants have stated that "planar" or "flat" surfaces are not circumferential attempting to distinguish prior art regarding the '178 Patent. RX-0123 at 52-53; RX-0229C at 4. Complainants state: "as shown in Fig. 22 of Niwa, unit 20 contains battery 24. But the unit is not disposed "between" outer and inner circumferential surfaces of Niwa. Rather, the battery is located between two planar surfaces of the housing protrusion, as shown below in red:"

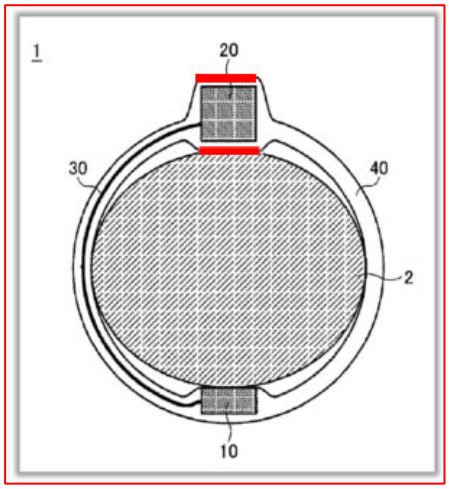

RX-0123 at 54 (Complainants annotation). Complainants additionally stated that in Niwa "no portion of [the] battery extends into a cavity between circumferential surfaces." *Id.* Statements to the patent office are a clear and unmistakable disclaimer that flat surfaces are not circumferential. *Id.*

The argument that the inner surface shapes of the Accused Products are nevertheless "circumferential" is precluded by Oura's own express statements , before the Patent Office. As noted above, Oura has distinguished prior art including "planar surfaces" as not reading on the claimed "inner circumferential surface." In its POPR, Oura argued that the flat or "planar surfaces" in the prior art Niwa reference are not "circumferential surfaces" in the context of the '178 Patent

[redacted]

claims. Ex. 3 at 54 ("not disposed 'between' outer and inner circumferential surfaces" rather "located between two planar surfaces."). These are clear assertions in support of patentability in view of which any competitor would understand that a "planar surface" would not part of the claimed "circumferential surface."

Applying estoppel here appropriately binds Oura to the position that it took in the IPR: that "planar surfaces" are not "circumferential surfaces." Indeed, the planar surfaces in Niwa that were distinguished by Oura are very similar to the planar surfaces of Respondents' products, and a "patent may not, like a nose of wax, be twisted one way to avoid anticipation and another to find infringement." *CommScope Techs. LLC v. Dali Wireless Inc.*, 10 F.4th 1289, 1299 (Fed. Cir. 2021).

Moreover, Oura's own expert's statements regarding invalidity in this Investigation are inconsistent with Oura's infringement positions. Indeed, Oura's expert has explicitly stated [redacted] Validity Report at ¶ 288 ("[redacted] ¶ 277 ("[redacted]). Expert testimony "cannot be relied on to change the meaning of the claims when that meaning is made clear" from the file history, and thus, "cannot create a genuine issue of material fact precluding summary judgment." *Southwall Techs., Inc. v. Cardinal IG Co.*, 54 F.3d 1570, 1578 (Fed. Cir. 1995). Thus, prosecution history estoppel applies. The RingConn Accused Product [redacted] The same prosecution history estoppel applies as it relates to Ultrahuman's product as well, which [redacted].

In its final burden contentions, Complainants state: "[redacted]

[redacted]," and "[redacted]." RX-0229C at 5. This further supports Mr. Alarcon's opinion that the alleged inner surfaces in the Accused Products are not circumferential.

Dr. Sarrafzadeh alleges that RingConn's ring is "[redacted]. Infringement Report at ¶ 78. Any implication on the part of Dr. Sarrafzadeh that this limitation is satisfied under the doctrine of equivalents is incorrect. [redacted]. The patent discusses a charging station that is "circumferentially around the WCD **110** so that the user does not have to be concerned whether the WCD **110** is facing the right direction." '178 Patent at 14:7-14. This is different than the Accused Products because the non-circumferential surface controls the ring orientation for charging.

[redacted]

RX-0119; RX-0120.

[redacted]

RX-0169C (annotated).

These are substantially different functions, done in a substantially different way, to achieve substantially different results, than the claimed circumferential surface, which can be oriented in

any direction. *See e.g.*, '178 patent at 14:7-14. For example, Curt von Badinski, an inventor of the '178 Patent has testified that "" Curt von Badinski Tr. at 53:25-54:4. Michael Chapp also testified that "" Chapp Tr. at 85:5-15. So, the circumferential surface claimed in the '178 Patent serves to meet user expectations relating to the typical look, comfort, and wear-ability of a ring; . For at least these reasons, along with Dr. Sarrafzadeh's failure to properly allege doctrine of equivalents, there is therefore no infringement under the doctrine of equivalents.

Mr. Alarcon will testify that, . The ALJ issued the claim construction ruling stating that "circumferential" had its plain and ordinary meaning and did not require a closed shape. . RX-0399. . '178 Patent at 18:43-61, 46:21-24. . RX-0399. Further, Mr. Alarcon will testify

[redacted]

[redacted]. Alarcon Rebuttal Report at ¶ 15.

[redacted]

RX-0421C; RX-0422C; RX-0423C; RX-0424C.

Mr. Alarcon [redacted]. Alarcon Rebuttal Report at ¶ 16.

(i) Complainants Admit That Planar Surfaces are Not Circumferential

Samsung filed a petition for post-grant review challenging the validity of the ’178 patent on May 31, 2024. Complainants filed a patent owner preliminary response to that petition on September 10, 2024. RX-0123.

[redacted]

In a response to the patent office regarding a challenge to the validity of the ’178 Patent, Complainants admit that planar surfaces are not circumferential. Complainants state: “as shown in Fig. 22 of Niwa, unit 20 contains battery 24. But the unit is not disposed ‘between’ outer and inner circumferential surfaces of Niwa. Rather, the battery is located between two planar surfaces of the housing protrusion, as shown below in red:”

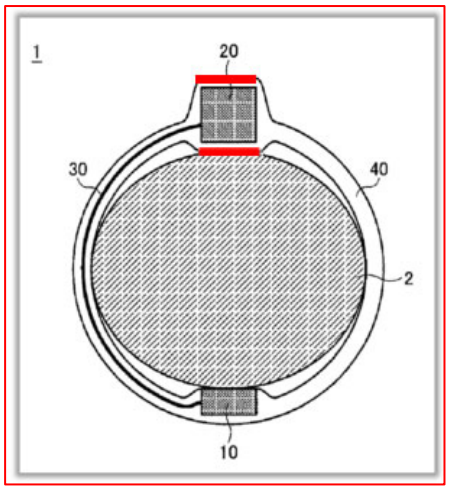

RX-0123 at 54 (Complainants’ annotation).

Complainants continue, stating: “Petitioner again ignores the claim language, contending that the protrusion housing the battery unit 20 is part of a circumferential surface when it is not. Consequently, Niwa also does not disclose a battery comprising ‘a shape and size configured to fit within the cavity between the outer circumferential surface of the external housing component and the inner circumferential surface of the internal housing component,’ as claimed.” *Id.* Complainants stated “[u]nlike the ’178 patent, Niwa teaches using a ‘highly flat’ battery ‘located right above the finger 2 . . . to enhance an affinity of the plethysmogram sensor 1 when the pulse sensor 1 is worn on the finger” and “Niwa includes little detail of the construction of housing 40, other than showing it as a unitary structure.” RX-0123.

[redacted]

Complainants also stated "Niwa's battery is between a flat protrusion from the ring shape, which a POSA would understand as not a portion of the outer circumferential[ ]surface defined by the external housing component, as shown in Fig. 28. Indeed, Respondents appear to grant this in their contentions, [redacted] RX-0229 at 4:

[redacted]

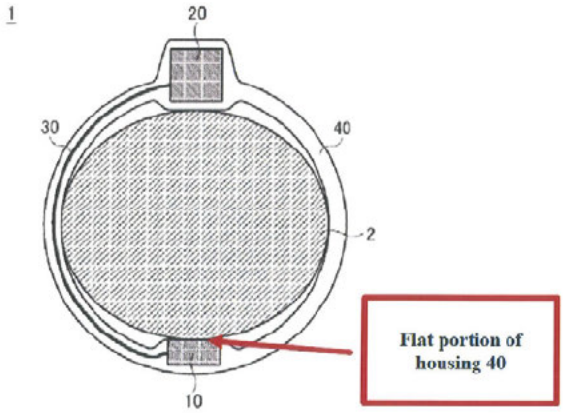

RX-0411C.127-128. Complainants' expert Dr. Rosing stated that the prior art battery "is disposed in a region of the ring that has a flat (i.e., not circumferential) protrusion from the inner surface of

the ring to contact the finger." *Id.* .

3. Limitation 1[b(ii)]: "the internal housing component coupled with the external housing component"

For all the reasons described above, the RingConn Accused Product's .

4. Limitation 1[c]: a battery positioned within a cavity formed between the internal housing component and the external housing component, wherein the battery comprises a shape and size configured to fit within the cavity between the outer circumferential surface of the external housing component and the inner circumferential surface of the internal housing component, and wherein the battery extends through at least a first portion of the cavity of the finger-worn wearable ring device

(a) RingConn's Accused Products do not Have a "Cavity"

All asserted claims require a "cavity formed between the internal housing component and the external housing component." '178 Patent, claim 1. The ALJ adopted the parties agreed-upon construction that "cavity" means "a hollow space." Order No. 17 at 5. .

RX-0399.10. In fact,

Nonetheless, Complainants still assert that RingConn's Accused Products have a cavity (i.e., a hollow space).

RX-0225C.32.

But a "hollow space" is ***the exact opposite*** of a filled space, and Complainants' position seeks to eviscerate the "cavity" limitation. *See* RX-0409 (Merriam Webster's Dictionary defining "hollow" as "an ***unfilled*** space") (emphasis added). Indeed, if a fully occupied space can constitute a "hollow space," then the parties' agreed-upon construction—adopted by the ALJ—would be rendered meaningless. A "hollow space" would mean exactly the same thing as a "filled space", and that simply cannot be the case.

Complainants' attempt to overcome this problem by arguing that "***if the components were to be removed from the solidified structure***, there would exist a hollow space in its place[]." Infringement Report at ¶¶ 156, 164 (emphasis added). The problem with Complainants' argument is that Moreover, Complainants' apparent attempt to modify the products in order to allege infringement is improper and inconsistent with Federal Circuit precedent. *High Tech Medical Instrumentation, Inc. v. New Image Indus., Inc.*, 49 F.3d 1551, 1555 (Fed. Cir. 1995) ("[A] device does not infringe simply because it is possible to alter it in a way that would satisfy all the limitations of a patent claim.") In this case, Complainants do not allege that removing the battery and printed circuit board would be possible or that it would result in a functioning device; nor have Respondents alleged that Respondents intend for the user to remove the battery or printed circuit board.

[redacted]

What's more, the claims require both "a cavity formed between the internal housing component and the external housing component" and "the internal housing component coupled with the external housing component." Accordingly, to meet the claims a hollow space must exist when the alleged internal housing component and external housing component are coupled or connected. [redacted].

Complainants resort to arguing that Respondents' non-infringement contention improperly relies on a claim construction that excludes embodiments and thus cannot be correct. This is plainly not the law, and Complainants know it as they too assert that disclosed embodiments (e.g., Figure 16) are not covered by the claims. It is a bedrock principle of patent law that the claims of a patent need not cover every disclosed embodiment. *See August Technology Corp. v. Camtek, Ltd.*, 655 F.3d 1278, 1285 (Fed. Cir. 2011) ("The mere fact that there is an alternative embodiment disclosed in the asserted patent that is not encompassed by our claim construction does not outweigh the language of the claim"); *see also SIMO Holdings, Inc. v. H.K. uCloudlink Network Tech., Ltd.*, 983 F.3d 1367, 1378-1380 (Fed. Cir. 2021). Complainants' cannot be heard to assert otherwise given that they too allege that certain disclosed embodiments are not covered by the asserted claims. Sarrafzadeh Dep. Tr. at 244:5-11 ("Looking at the description of figure 16 …, I believe this is not an embodiment of Claim 1….").

As discussed *infra*, the majority of the relevant embodiments disclosed in the specification do include a hollow space and, thus, fall with the scope of the claims. For example, Figures 8 and 15B shown below are two of the claimed embodiments.

[redacted]

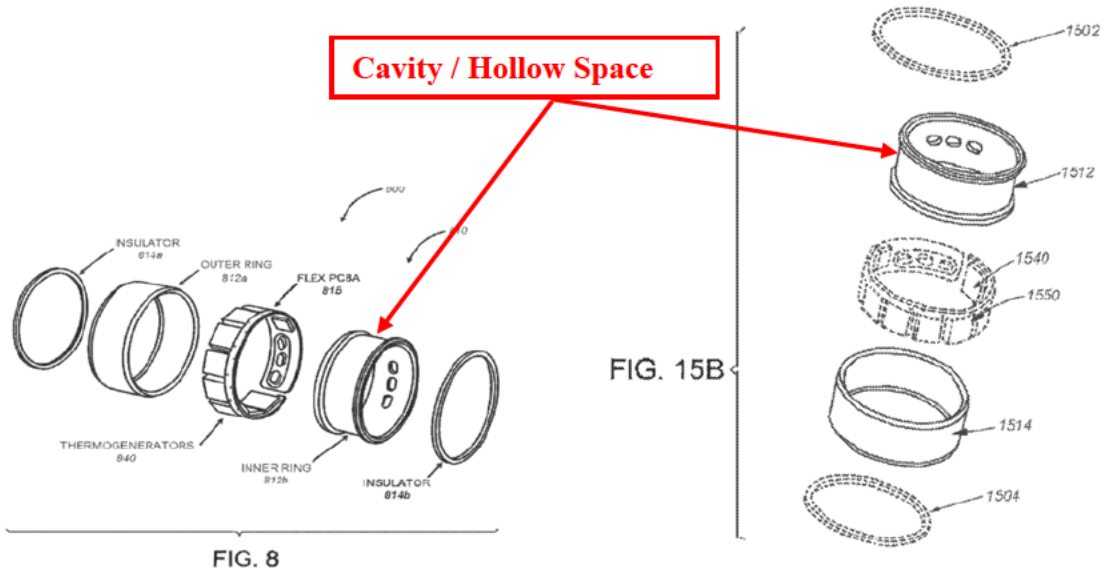

As shown above, these embodiments comprise the claimed elements, including an unnumbered cavity / hollow space formed between the internal housing component 812b / 1512 and the external housing component 812a / 1514.

Figures 12 and 14 of the '178 Patent shown below likewise disclose hollow spaces where components between two enclosing structures.

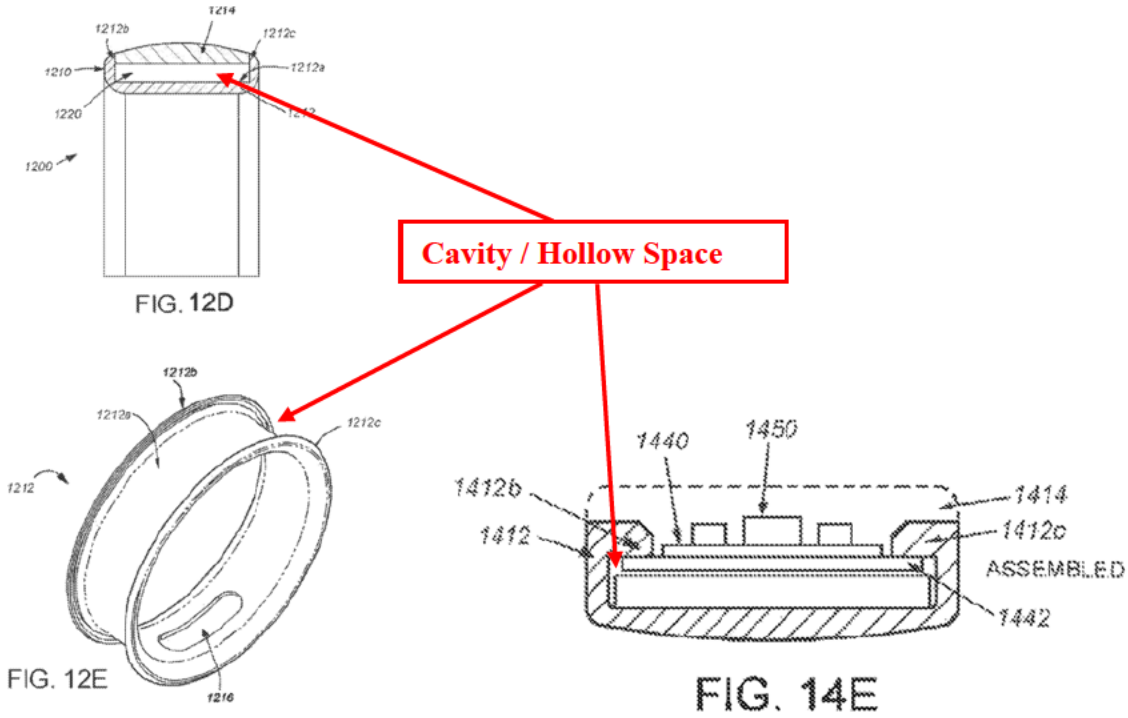

As illustrated, these embodiments also include hollow spaces (e.g., 1220) formed between the internal housing component 1212 / 1412 and the external housing component 1214 / 1414.

In each of the foregoing embodiments, the final assembled device includes a hollow space (i.e., a cavity) between two enclosing structures and components (e.g., a battery) positioned and sized and shaped to fit within the independently defined cavity / hollow space. With respect to the "External Housing/Internal Potting" embodiment of Figure 13, the specification describes a "space" that is fully occupied. As a result, that space is not a cavity (i.e., a hollow space).

Perhaps most damaging to Complainants' argument is the critical fact that . And while Complainants allege that true. As Complainants' tear downs make clear, Thus, ***this mythical hollow space that Complainants allege is the cavity never actually exists***.

Mr. Alarcon will testify that, as he stated in his rebuttal report,

. RX-0399.

Id.

Id.

Mr. Alarcon will also testify that . *Id.* . *Id.*

RX-0399.5-8; RX-0399.10.

(b) RingConn's Accused Products do not Have a "cavity formed between the internal housing component and the external housing component"

If Complainants and Dr. Sarrafzadeh are held to their original infringement theory alleging . That is because

As shown in the image below, the

RX-0225C.32.

RX-0399.10. Additional tear down images of

RX-0418C; RX-0419C; CX-0427.

Even Complainants' expert Dr. Sarrafzadeh expressly admitted

Specifically, he testified that ." Dr. Sarrafzadeh Dep. Tr. at 91:24-92:1. He further testified that " *Id.* at 142:11-18.

Complainants' images from their own teardowns also acknowledge . For example,

RX-0399; RX-0425C.

As shown in the two images below,

:

RX-416C.

Complainants do not dispute . Indeed, they have filed a separate lawsuit in the District Court of Delaware asserting that . RX-0224C.58.

In light of the foregoing, .

. There is no dispute that the claims recite that the cavity—and not just some portion of it—is formed between the internal housing component and external housing component. The claim language demonstrates that the inventors would

deliberately use the term "portion" when they wanted to refer to only a portion of something. For example, the claims recite "a portion of the inner circumferential surface of the internal housing component is configured to contact a tissue of a user." '178 Patent at claim 1. Moreover, claim 1 of the '178 Patent recites a "first portion of the cavity" and a "second portion of the cavity." Thus, when the claims recite a "cavity formed between" the internal and external housing components, it does not means just some portion of the cavity—it means all of it. That is entirely consistent with the claimed embodiments in the specification showing the hollow spaces that are entirely between internal and external housing components.

Here, Complainants cannot dispute that the cavity is surrounded entirely by potting (except at the charging contacts where it is open to air), but even if they could, they cannot dispute that most of the cavity is surrounded by potting. Thus, there can be no dispute that at least the vast majority of the alleged cavity is not formed "between" the potting material and the metallic ring.

Even accepting the "crust" as the internal housing component, any alleged cavity is entirely within the remaining potting material, and thus such potting material prevents the cavity from being "between" the alleged internal and external housing components. Under this interpretation, the alleged cavity would instead be "formed between" the "crust" on the one hand and the remaining potting material on the other. But the claims require the cavity to be formed between the internal and external housings—any potting material between the "crust" and the metal portion of the ring prevents this limitation from being met.

Importantly, the alleged cavity in the RingConn Accused Products does not satisfy this limitation for another reason, which also applies even under Complainants' new argument that the internal housing component is just a portion of the potting. As shown below, and admitted by

Dr. Sarrafzadeh,

RX-0225C.32.

Indeed, Dr. Sarrafzadeh admitted . RX-0325C Sarrafzadeh Dep Tr. at 276:3-13. A cavity that is exposed to air by definition is not between two components because one side is exposed to air. Arguing that only a portion of the cavity is exposed to air and the other portions are not will not help Complainants. As noted, the applicants of the '178 Patent established that they knew very well how to claim portions of things, and did not claim that only a portion of the cavity needs to be "formed between" the internal and external housing components. The entire alleged cavity must be between the two housing components (consistent with what is disclosed in the specification) and Complainants admit that is not the case with respect to the alleged cavity in the RingConn Accused Products. *Id.* at 278:8-11 ( ); *see also Id.* at 276:14-21).

Mr. Alarcon also will testify .

RX-0416C-0418C; RX-0425C-0426C.

(c) RingConn's Accused Products do not have a "battery positioned within a cavity … compris[ing] a shape and size configured to fit within the cavity"

Based on the express language of the claim, the claimed cavity is a hollow space that exists and is defined independently of the battery. The claim language makes this clear when it recites that the battery is "***positioned*** within the cavity" and is of a "***size and shape configured to fit within the cavity***." If the claims require that the battery is "positioned within the cavity," and that the battery be "size[d] and shape[d] … to fit within the cavity," then that cavity (i.e., hollow space) must be defined and exist independently of the battery so that the battery can be "positioned" and "size[d] and shape[d] … to fit" within that hollow space. In other words, the

claimed battery cannot define the cavity or dictate it's shape because the claims require a cavity in which the battery "is positioned" and "size[d] and shape[d]" to fit.

Complainants' however, have it backwards. Under Complainants' infringement theory, the cavity in the Accused Products does not exist independent of the battery. Indeed, under Complainants' infringement theory, the battery, PCB and potting material define the alleged cavity. The larger the battery, the larger the alleged cavity. Likewise, the smaller the batter, the smaller the alleged cavity. Under Complainants' infringement theory, the alleged cavity is entirely dependent on and defined by the shape and size of the battery and PCB. But this infringement theory ignores the claim language calling for "a battery ***positioned within a cavity***," and of "a shape and size ***configured to fit within a cavity***." A cavity's existence that is wholly dependent on the existence of a battery and and PCB and does not exist without them is not a cavity in which a battery "is positioned" and "shape[d] and size[d] to fit." By the express language of the claims, the cavity (i.e., a hollow space) must be independently formed between an internal and external housing, and the battery must be "positioned … and shape[d] and size[d] to fit within th[at] cavity." RingConn's Accused Products simply do not have these claimed elements.

(d) RingConn's Accused Products do not Have "the cavity between the outer circumferential surface of the external housing component and the inner circumferential surface of the internal housing component"

The RingConn Accused Product also does not have an "inner circumferential surface" because they include inner flat or planar surfaces that align charging contacts and prevent rotation during charging. The asserted claims require that "the cavity [is] between the outer circumferential surface of the external housing component and the inner circumferential surface of the internal housing component." '178 Patent at Claim 1. Even taking Complainants' assertion that what Dr.

Sarrafzadeh identifies —that alleged cavity is not between circumferential surfaces.

Complainants do not dispute that the above flat surfaces are not circumferential. Complainants' expert specifically includes

Rather, Complainants seem to argue that only the battery needs to be located between "circumferential portions." That is not, however, what the claims require. The claimed "cavity" itself needs to be "between the outer circumferential surface of the external housing component and the inner circumferential surface of the internal housing component"—not just the "first portion" of the cavity occupied by the battery. JX-0001 at Claim 1. Complainants' own invalidity expert (Dr. Rosing) distinguished prior art by stating that Specifically, Dr. Rosing stated

[redacted]

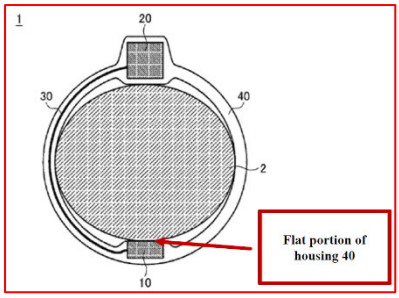

The ’178 patent also describes that an arc is a portion of an entire circumference:

> In one example, the size of the internal diameter d1 of the WCD can determine the portion of the internal surface 1212 a around which the PCB 1240 extends. Illustratively, for a larger ring size and a larger internal diameter d1, the PCB 1240 can extend only a portion (an arc) of the overall circumference, while for smaller ring sizes a greater portion (arc) of the circumference can be employed to accommodate PCB 1240 and the internal components 1230. The adjacent portions of PCB can form an arc angle therebetween by virtue of the folding regions disposed therebetween, allowing for the PCB to be conform to the internal surface 1212a.

JX-0001 at 18:43-61. This shows that a POSA would not understand an arc to be a circumferential surface. The same is discussed in claim 12, which states “wherein the battery comprises a curved battery, wherein an arc of the curved battery approximates a corresponding arc of the external housing component.” The portion that Dr. Sarrafzadeh identifies is only an arc of the overall inner surface and inner circumference and not an inner circumferential housing component.

In other words, the prior art’s second portion of the cavity was under a flat surface in exactly the same manner as the portion of the alleged cavity identified by Complainants in the Accused Products that has the PCB. *Id*. But a “patent may not, like a nose of wax, be twisted one way to avoid anticipation and another to find infringement.” *CommScope Techs. LLC v. Dali Wireless Inc.*, 10 F.4th 1289, 1299 (Fed. Cir. 2021).

[redacted]

5. Limitation 1[d]: a printed circuit board disposed between the internal housing component and the external housing component, wherein the printed circuit board extends through at least a second portion of the cavity of the finger-worn wearable ring device different from the first portion; and

(a) RingConn's Accused Products do not have a "printed circuit board disposed between the internal housing component and the external housing component"

If Complainants and Dr. Sarrafzadeh are held to their original infringement theory alleging that [redacted] or if the Staff adopts such a theory, then the PCB in the Accused Products is not "disposed between the internal housing component and the external housing component" as required by the asserted claims. That is because the potting used in RingConn's Accused Products [redacted]

RingConn's Fact witness will testify [redacted]

RX-0399.10. Additional tear down images —including those images below—further confirm that

RX-0418C; RX-0419C; CX-0427.

Complainants do not dispute that the PCB and battery components are encapsulated by potting. Indeed, they have filed a separate lawsuit in the District Court of Delaware asserting that . RX-0224C.58.

Complainants' expert Dr. Sarrafzadeh expressly admitted that t. Specifically, he testified that "[." Dr. Sarrafzadeh Dep. Tr. at 91:24-92:1. He further testified that " *Id.* at 142:11-18. Accordingly, Complainants do not dispute that there is material that surrounds the entirety of the PCB.

In their opposition to Respondents' Motion for Summary Determination, Complainants did suggest that . Complainants' MSD Response, EDIS Doc. No. 836327, at 15 (" "). Complainants are wrong. As noted above, and as reported in RingConn's own documents, . Images of the RingConn product—including those shown below—

RX-0406.

In light of the foregoing, to the extent that any party alleges that the potting is the internal housing component, the RingConn Accused Product does not infringe . It was only after Respondents moved for non-

[redacted]

infringement on this argument that Complainants decided to change their contention to assert that only a portion of the potting is an internal housing component.

Mr. Alarcon will also testify that [redacted]. RX-0399. He will opine that [redacted] (*see e.g.* RX-0255C (Oura Final Burden Contentions for the '178 Patent) [redacted] *Id.* The teardown further confirms that [redacted]. *Id*;

This is also shown in physical teardowns performed by Complainants that [redacted]

[redacted]

[redacted]

RX-0415C; RX-0416C; RX-0419C; RX-0420C.

[redacted]

RX-0421C; RX-0422C; RX-0423C; RX-0424C.

Second, Mr. Alarcon will also testify that Dr. Sarrafzadeh . RX-0399.8, .10, .13, and .17. As noted by Dr. Sarrafzadeh "[." RX-0399.7. Mr. Alarcon will testify that

The images above also show *See e.g.*, RX-0399.5, RX-0399.10, RX-0399.13.

Thus, Mr. Alarcon will testify that ."

(b) The RingConn Accused Products do not have a second portion of a cavity including a PCB between circumferential surfaces

As noted above, the claims of the '178 Patent require that "the cavity [is] between the outer circumferential surface of the external housing component and the inner circumferential surface of the internal housing component." And the claims further require that "the battery extends through at least a first portion of the cavity" and "the printed circuit board extends through at least a second portion of the cavity." Thus, the claims of the '178 Patent require that both the first portion of the cavity containing the battery and the second portion of the cavity containing the

PCB must be between the outer circumferential surface of the external housing component and the inner circumferential surface of the internal housing component.

The RingConn Accused Product . Indeed, . Rather, as shown below in Dr. Sarrafzadeh's annotations, .

RX-0402C.122; RX-0167

Specifically, Dr. Rosing stated that " RX-0411C ¶ 277. Dr. Rosing then provided the below annotation of the prior art Niwa reference.

[redacted]

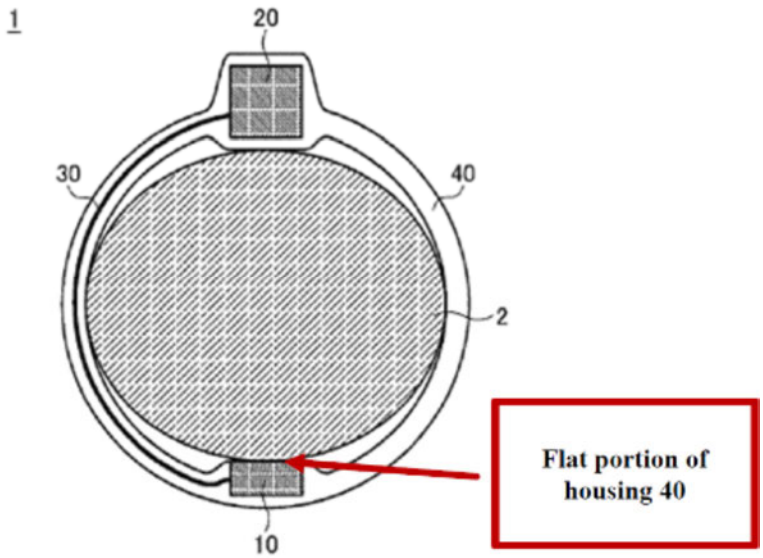

Id. at ¶ 277.

In other words, Oura's expert distinguished the claims from a prior art configuration which is strikingly similar to that of the Accused Products. The prior art Niwa's second portion of the cavity was under a flat surface, and so too is the second portion of the alleged cavity identified by Oura in the Ultrahuman Accused Products containing the PCB. A "patent may not, like a nose of wax, be twisted one way to avoid anticipation and another to find infringement." *CommScope Techs. LLC v. Dali Wireless Inc.*, 10 F.4th 1289, 1299 (Fed. Cir. 2021). Thus to the extent Niwa does not meet this claim limitation, the RingConn Accused Product does not infringe for the same reason.

F. RingConn's Accused Products Do Not Infringe Dependent Claim 2: "The finger-worn wearable ring device of claim 1, wherein the first portion of the cavity of the finger-worn wearable ring device is non-overlapping with the second portion of the cavity of the finger-worn wearable ring device."

Claim 2 recites "The finger-worn wearable ring device of claim 1, wherein the first portion of the cavity of the finger-worn wearable ring device is non-overlapping with the second portion of the cavity of the finger-worn wearable ring device."

As discussed above, the RingConn Accused Product does not include a "cavity formed between the internal housing component and the external housing component," much less "a first portion of the cavity," or a "second portion of the cavity" as one of skill would understand those terms. Moreover, even as alleged, Dr. Sarrafzadeh does not establish how any first portion of the cavity is non-overlapping with the second portion of the cavity.

G. RingConn's Accused Products Do Not Infringe Dependent Claim 12: "the finger-worn wearable ring device of claim 1, wherein the battery comprises a curved battery, wherein an arc of the curved battery approximates a corresponding arc of the external housing component."

Claim 12 is not infringed for at least the reasons discussed above regarding claim 1 and each of those noninfringement positions are incorporated as if fully stated herein. Further, the RingConn Smart Ring comes in different sizes, which thus have different external housing arcs. Nowhere does Complainants attempt to meet their burden that each of these rings has On top of that, in his expert report Dr. Sarrafzadeh relies on a single CT scan for this limitation—without identifying the size of the ring—and does not submit any evidence that the other rings allegedly meet this limitation. Complainants do not meet their burden to prove that each of the RingConn Accused Products meet this limitation. Therefore, this limitation is not met by the RingConn Accused Product.

[redacted]

H. RingConn's Accused Products Do Not Infringe Dependent Claims 13 and 14: "The finger-worn wearable ring device of claim 1, wherein the one or more sensors comprise a first light-emitting component configured to emit light associated with a first wavelength, and a second light-emitting component configured to emit light associated with a second wavelength different from the first wavelength," and "The finger-worn wearable ring device of claim 13, wherein the first wavelength is associated with visible light, and wherein the second wavelength is associated with infrared light."

Claims 13 and 14 are not infringed for at least the reasons discussed above regarding claim 1 and each of those noninfringement positions are incorporated as if fully stated herein.

I. RingConn's Accused Products Do Not Infringe Dependent Claims 17 and 18: "The finger-worn wearable ring device of claim 1, wherein the external housing component and the internal housing component define the cavity configured to at least partially surround the battery, and the printed circuit board, wherein one of the external housing component or the internal housing component comprises: a first side wall and a second side wall that extend between the internal housing component and the external housing component, wherein the cavity is defined at least in part by the outer circumferential surface, the inner circumferential surface, the first side wall, and the second side wall," and "the finger-worn wearable ring device of claim 17, wherein the first side wall, the second side wall, or both, are substantially perpendicular to the inner circumferential surface, the outer circumferential surface, or both."

Claim 17 (and by dependency claim 18) recites, "wherein one of the external housing component or the internal housing component comprises: a first side wall and a second side wall that extend between the internal housing component and the external housing component, wherein the cavity is defined at least in part by the outer circumferential surface, the inner circumferential surface, the first side wall, and the second side wall." However, even if you accept Dr. Sarrafzadeh's strained and incorrect conclusions in the image below, [redacted].

Infringement Report at ¶ 290 *citing* Oura-ITC-CTScan-003.0004 (Dr. Sarrafzadeh's annotations). Therefore, this limitation in claims 17 and 18 is not met for this additional reason.

V. THE ULTRAHUMAN ACCUSED PRODUCTS DO NOT INFRINGE THE ASSERTED CLAIMS OF THE '178 Patent

A. Patent Background

The patent concedes that ringed-shaped wearable computing devices (WCD) have long existed. JX-0001.0069 at 1:50-52. Generally, these devices include "an interior wall; an exterior wall; a flexible printed circuit board disposed between the interior wall and the exterior wall; at least one component disposed on the flexible printed circuit board; and wherein at least one of the

[redacted]

interior wall and the exterior wall defines a window that facilitates at least one of data transmission, battery recharge, and status indication." *Id.* at 1:56–63.

While the patent discloses many embodiments, the one claimed here requires two separate housing components—one external and the other internal—that when coupled together form both the ring superstructure and, between them, an internal cavity for receiving the ring's electronic components, such as the battery, printed circuit board (PCB), and sensors.

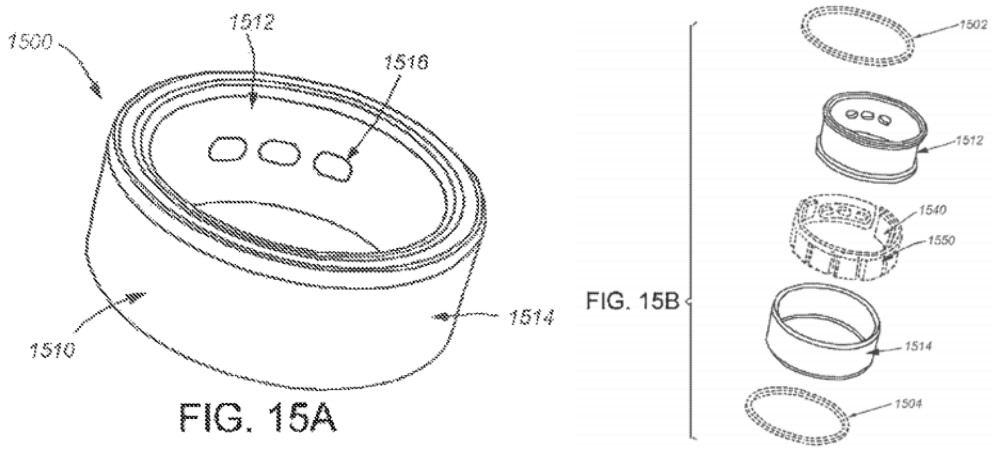

JX-0001.0027-0028; *see also* JX-0001.0078 at 20:28-49.

The claims track the structure of this embodiment, requiring: (1) "an external housing component defining an outer circumferential surface; (2) "an internal housing component defining an inner circumferential surface coupled with the external housing component"; (3) "a cavity formed between the internal housing component and the external housing component"; (4) "a battery positioned" within the cavity that has "a shape and size configured to fit within the cavity"; (5) "a printed circuit board disposed between the internal housing component and the external housing component" that "extends through" the same cavity; and (6) "one or more sensors electrically coupled with the printed circuit board and the battery" for acquiring user data "through the internal housing component." JX-0001.0090-91, cl. 1. Driving each and every limitation is the

[redacted]

claimed ring's two-enclosure housing structure—one that includes both an "internal" and "external" housing component that enclose space and create a cavity between them when coupled.

Complainants concede that the patent specification includes unclaimed embodiments. RX-0325C.63 at 249:13-18. Complainants further admit that rings with a single component that encloses space (single-enclosure housing embodiments), as opposed to rings with multiple coupled components, do not embody the claims. *Id.* at 251:11-19.

Figure 13 is just such a single-enclosure housing embodiment. Indeed, the ring includes only an "external housing"—which acts as a substrate for the ring's electronic components and potting encapsulant—but has no opposing "internal housing" that performs a corresponding enclosing function:

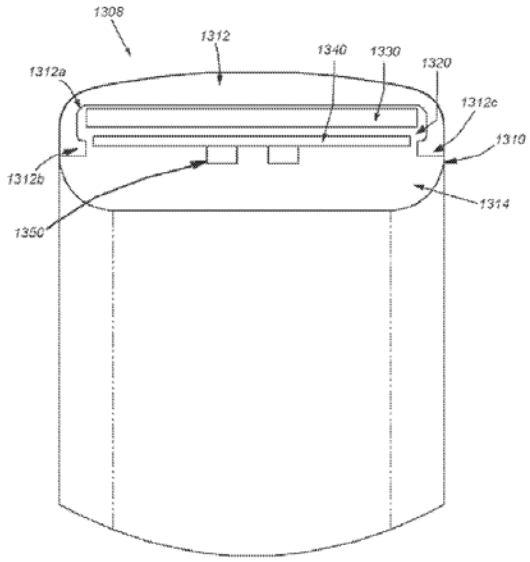

FIG. 13

As the specification describes, the single-enclosure housing embodiment of Figure 13 includes "flanges" that "define a partially enclosed internal space" within which the ring's electronic components can be placed. JX-0001.0077-78 at 18:63-19:16. While potting is added later as an encapsulant, it does not enclose space as required by the claim construction, nor is a

cavity (hollow space) ever formed between the encapsulant potting and the unitary housing component. *Id.* Further, no reference whatsoever is made to the so-called "crust" of the potting encapsulant, much less that "crust" tracks any limitation from the claims. *See id.* Indeed, "crust" is a term coined by Dr. Sarrafzadeh during expert discovery that has no predicate in the patent.

B. The Ultrahuman Ring Does Not Read on the Claimed Embodiment

Ultrahuman's accused product has, :

(CX-0056 (annotated).)

As such,

Just as a femur does not reside within a "cavity" in a person's leg, Any other interpretation would vitiate the term "cavity" and conflict with its construction as being "a hollow space." JX-0014.0005.

Other claim limitations reinforce this conclusion. The "housing component" has been construed as a "structure that encloses space[.]" JX-0014.0014.

For similar reasons, JX-0014.0005 at 5. Complainants have repeatedly struggled throughout this Investigation . Now that Complainants have shifted to their new, "crust" position, . Indeed, Complainants have offered no evidence about

The claims also require a battery with "a shape and size configured to fit within the cavity." JX-0001.0090-91, cl. 1. But Ultrahuman's battery is not "configured to fit within the cavity." . Indeed, Complainant's

[7] Complainants' hypothetical—that the components could be removed from the ring solidified structure without disturbing the structure itself—violates the laws of physics.

[redacted]

contrary interpretation would vitiate the shape and size limitation: if encapsulation is all that is needed for a cavity to exist, then ***every*** encapsulated battery—no matter its shape and size—would be said to reside within a cavity and configured to fit within a cavity. Further, the battery's size and shape would drive the parameters of the cavity, even though the claims require the inverse.

The divergence does not stop there. [redacted]:

[redacted]

(CX-1069 (annotated); CX-1089 (annotated); RX-0428C; RX-0429C (annotated).) Neither component is thus "positioned . . . between" or "disposed between" "the internal housing component and the external housing component." JX-0001.0090-91, cl. 1. As per Complainants' claim mapping, each one is at most disposed ***within*** the item mapped to the "internal housing component."

In the end, Complainants' argument boils down to the notion that,

Complainants' results-driven infringement case thus amounts to an arbitrary line drawing exercise. Explicitly so:

- (RX-0226C.16, 18):

- Yet in their Motion for Summary Determination response, Complainants say RX-0448C.0031):

While neither is true, Complainants' inability to "draw the line" the same way illustrates how poorly Ultrahuman's ring maps to the claims.

C. The Divergence of Ultrahuman's Ring from the Claims Is a Consequence of Ultrahuman's Manufacturing Process

Complainants ignore that the design and structure of Ultrahuman's ring is driven by the mold used during the manufacturing process. Resin fills the space between the outer housing and the mold, and in this respect, the mold performs an "enclosing" function like the one performed by the internal housing component. *See* 'JX-0001.0027, Fig. 15B (identifying component 1512 as the internal housing component); *id.* at 20:45-49 ("Once the housings 1512-1514 are assembled and the PCB 1540 and components 1550 are assembled within space defined between the housings 1512-414, potting layers 1502 and 1504 can be applied to seal the WCD at both sides thereof to ensure a secure seal.").

D. Independent Claim 1

1. Limitation 1[b(i)]: an internal housing component defining an inner circumferential surface of the finger-worn wearable ring device

(a) The Ultrahuman Accused Products do not Include an Internal Housing Component.

The claims require both an internal housing component and an external housing component. The specification further distinguishes between embodiments with both internal and external housing components, (e.g., JX-0001.0026 Fig. 15A), and those with either an internal housing or an external housing, but not both, e.g., JX-0001.0021-24 Figs. 12, 13. In the case of Figure 13, where there is only an external housing component, that external housing component 1312 "define[s] a partially enclosed internal space"—in which components such as a battery and

printed circuit board are arranged—and is sealed by internal potting or encapsulant 1314. JX-0001.0077-0078 at 18:63-19:16. The "internal potting or encapsulant 1314" is then used to "seal the partially enclosed internal space" and the battery/PCB can further "be encapsulated by the internal potting." *Id*.

On the other hand, the specification describes an embodiment where internal and external housing components are assembled together where the battery and PCB are in "assembled within space defined between the housings."(JX-0001.0078 at 20:42-49. Here too, "potting layers" "can be applied to seal" the ring.(*Id*.

Thus, the patent distinguishes between a housing on the one hand, which can be assembled with another housing to enclose and define space, and material that simply seals. This is consistent with the Court's claim construction that an "internal/external housing component" is a "structure that encloses space." JX-0014.0014. While the Court was clear that potting *may* be a housing, it did not hold that all potting is ***necessarily*** a housing. Consistent with the disclosure in the specification, where potting is used as a sealant, rather than to enclose and define space, it is not a housing. Since Figure 13 contains only an external housing, it does not embody the claims.

Oura asserts that the claims require two housings. Oura attempts to distinguish the prior art by claiming that various pieces of prior art do not disclose "the internal housing component coupled with the external housing component" because the prior art discloses a "unitary structure." RX-0229C.2 ("Niwa discloses a unitary structure, and thus also does not disclose the internal housing component coupled with the external housing component."); RX-0432.2 ("Respondents appear to simply point to different portions of the same unitary structure, rather than a component, as allegedly meeting both the external housing component and internal housing component limitation. The claim limitations require two separate structure (i.e., "external housing

[redacted]

component") and ("internal housing component."). RX-0123C.60. ("Niwa does not disclose or suggest internal and external housing components, as claimed. Rather, Niwa discloses a unitary, component-less housing 40, shown in Fig. 23 below, and fails to disclose how the housing is constructed.); RX-0123C.60-61 ("The petition includes no explanation as to why it would be obvious to use a unitary housing instead of the claimed components. Pet. at 77-79. Rather, it appears that Petitioner is identifying sections of the unitary housing 40 as being 'components'"); RX-0123C.61 ("Petitioner's interpretation of Niwa reads at least the limitations "component" and "coupled with" completely out of the claims. Under Petitioner's interpretation, the term "housing" is synonymous with both "external housing component" and "internal housing component," and "the internal housing component coupled with the external housing component" has no meaning at all.").

Here, the Ultrahuman Accused Products do not practice this limitation because [redacted] t. *See* RX-0084C - RX-0086C; RX-0093 – RX-0117; RX-0157C - RX-0165C; RPHYS-0001.

(RX-0118.1 (annotated).)

.

Oura's argument that Ultrahuman's Accused Products practice this element is an exercise in arbitrary line drawing. Oura initially alleged that the *entire* "internal molded structure of the Ultrahuman Accused Product is [an] internal housing component'" RX-0402.51, ¶ 100.

(RX-0402.55 (Oura Annotations).) That argument fails for the reasons described above.

Recognizing the weakness in their position, they have since abandoned that position, "[8] RX-0448C.31. Oura further stated that " " RX-0448C.32. Further, Dr. Sarrafzadeh has now testified ." RX-0325C.8 at 29:3-6.

The identified "crust" is just an arbitrary portion of the potting material used in the Ultrahuman Accused Product. Critically, the "crust" layer of the Ultrahuman Accused Product is not a separate structure that "encloses" any space as required by the ALJ's construction. JX-0014.0014. Instead, the There is nothing in the specification of the '178 Patent that supports Oura's arbitrary line drawing. Indeed, there is no line of demarcation between what Oura apparently alleges is and is not the claimed internal housing component within the potting material of the Ultrahuman Accused Products.[9] *Cf.* RX-0402.51, ¶ 98.

Oura has also failed to adequately support any positions regarding the doctrine of equivalents. Dr. Sarrafzadeh's report states,

---

[8] Ultrahuman reserves its right to preclude this newly disclosed argument from being relied on at trial.

[9] Oura's arbitrary line drawing exercise renders the claims indefinite under § 112 as it does not give the public reasonable certainty as to the scope of the claims.

[redacted] *See id.*, ¶ 99. Dr. Sarrafzadeh fails to provide support or anything beyond conclusory statements to make this allegation. This is clearly insufficient to support a position [redacted]. *See Texas Instruments Inc. v. Cypress Semiconductor Corp.*, 90 F.3d 1558, 1567 (Fed. Cir. 1996) (holding that "merely generalized testimony" that two components were the same and performed the same function was insufficient to create a factual dispute to preclude JMOL).

(b) The Ultrahuman Accused Products do not have an "inner circumferential surface"

The Ultrahuman Accused Products [redacted] The ALJ found that "circumferential has its plain and ordinary meaning and does not require a closed shape." JX-0014.0017. An "open shape" in the context of a ring is one that does not go completely around the finger, whereas a "closed shape" would. An example of an open shape according to Oura is shown below:

(RX-0458.31; *see also* RX-0459.0087 at 86:8-12 (Oura's counsel describing the above image as "an open shape").)

And while the claims allow for an open shape, a POSA would understand that the "inner circumferential surface" cannot be more than one shape. RX-0449C.33 at 127:9-13 ("[redacted]."). Indeed, Oura's expert's opinion [redacted]. RX-0402.56, ¶ 105. That is improper in an infringement analysis. *See CommScope Techs. LLC v. Dali Wireless Inc.*, 10 F.4th 1289, 1299 (Fed. Cir. 2021) ("[A] patent may not, like a nose of wax, be twisted one way to avoid anticipation and another to find infringement."). Thus, [redacted]:

[redacted]

(RX-0118.1 (annotated); *see also* RX-0093 – RX-0117; RX-0157C – RX-0165C; RPHYS-0001.)

Oura ignores the flat portion of Ultrahuman's Accused Products, instead pointing generally to the round portion of the product as shown in their annotated CT scans below:

(RX-0402.55 at ¶ 104 (Oura Annotations).) But neither the claims nor the specification support their argument that a curved portion meets the claims. JX-0014.0016-0017.

On top of that, Oura's statements before the Patent Office and in this investigation disclaim or otherwise preclude any scope of "circumferential" that covers this flat shape of the Ultrahuman Accused Products.

Specifically, Samsung filed a petition for post-grant review on the '178 Patent on May 31, 2024. *See* RX-0444. After the August 15, 2024 claim construction hearing in this Investigation, Oura filed a Patent Owner Preliminary Response ("POPR") on September 10, 2024 in that proceeding. RX-0123C. In the POPR, Oura told the Patent Office that, RX-0123C.62. Specifically, Oura told the patent office:

> Second, as shown in Fig. 22 of Niwa, unit 20 contains battery 24. But the unit is not disposed "between" outer and inner circumferential surfaces of Niwa. Rather, the battery is located between two planar surfaces of the housing protrusion, as shown below in red:

[redacted]

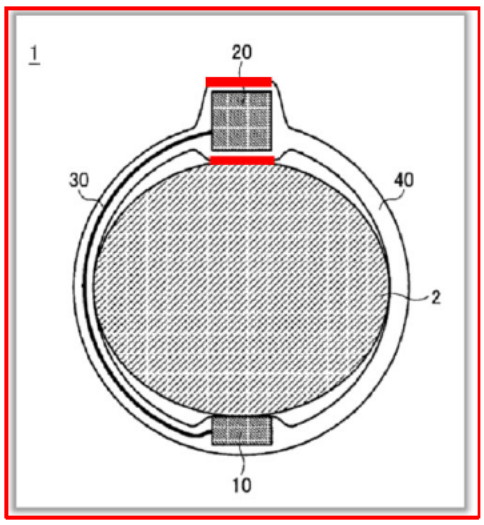

(RX-0123C.25;. RX-0123C.62.) Niwa, above, shows ring housing 40 and finger 2. (*Id.*)

Oura's expert repeated this same position in his validity report in this Investigation. RX-0411C.130 ¶ 288. In that report, Oura's expert explicitly stated:

> 288. First, as discussed above in paragraph 273 above on page 113, the figures of Niwa show that the battery is disposed in second unit 20 between planar (i.e., not circumferential) portions of housing 40:

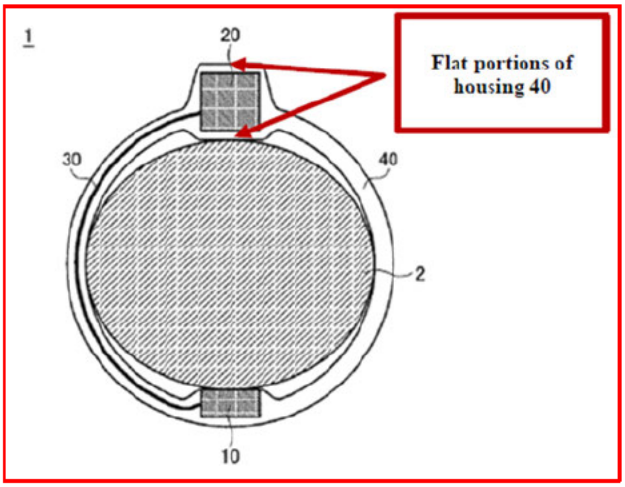

(RX-0411C.130-131 ¶¶ 288-289.)

Indeed, Oura's expert further stated that the prior art "does not disclose that the printed circuit board extends through a cavity 'between the outer circumferential surface of the external housing component and the inner circumferential surface of the internal housing component'" because the printed circuit board "is disposed in a region of the ring that has a flat (i.e., not circumferential) protrusion from the inner surface of the ring to contact the finger." (RX-0411C.127 ¶ 277.) He provides the following annotation stating that the flat portion of Niwa's housing 40 that overlaps with Niwa's PCB is not circumferential:

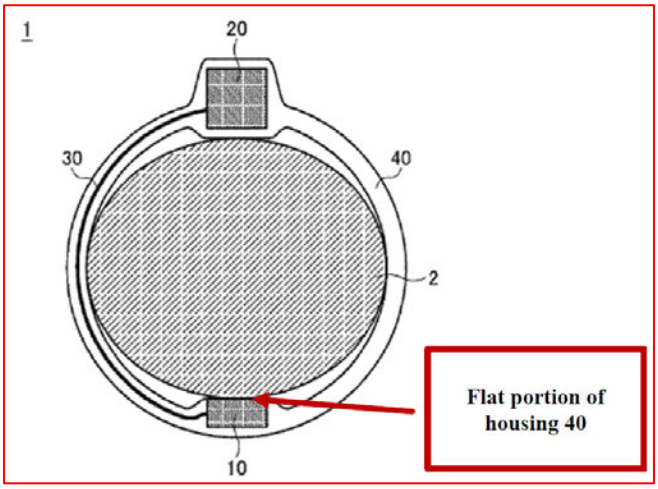

(*Id.*)

Accordingly, any argument that the inner surface shape of the Ultrahuman Accused Product are nevertheless "circumferential" is precluded by Oura's own party admissions in the form of their statements to the Patent Office and their expert's opinion in this Investigation. Oura cannot take a contrary position now. *Aylus Networks, Inc. v. Apple Inc.*, 856 F.3d 1353, 1362 (Fed. Cir. 2017) (applying judicial estoppel to arguments made during "post-issuance proceedings before the PTO," including reexaminations); *see also Conoco, Inc. v. Energy & Envtl. Int'l, L.C.*, 460 F.3d 1349, 1363 (Fed. Cir. 2006). To the extent that Niwa's planar surfaces do not render the claims invalid, the Ultrahuman Accused products do not infringe for the same reason. *CommScope Techs.*

LLC v. Dali Wireless Inc., 10 F.4th 1289, 1299 (Fed. Cir. 2021) ("A patent may not, like a nose of wax, be twisted one way to avoid anticipation and another to find infringement.")

To the extent Oura argues that this limitation is satisfied under the doctrine of equivalents that argument also fails. Oura's expert has provided only a single conclusory sentence in support of a doctrine of equivalents position, with no additional analysis or explanation. *See* RX-0402.0056 ¶ 105. This is clearly insufficient to support such a position. *See Texas Instruments Inc.*, 90 F.3d at 1567. Here, Oura's expert provides even less analysis than the expert from *Texas Instruments*. Indeed, Oura does not even allege that the Accused Products perform substantially the same function in substantially the same way with substantially the same result.

Moreover, at a minimum, . (RX-0121 (annotated); RX-0122.)

This is a substantially different function than the claimed circumferential surface, which can be oriented in any direction. *See e.g.*, JX-0001.0075at 14:7-14. For example, Curt von Badinski, an inventor of the '178 Patent has testified that " RX-0322C.0014 at 53:25-54:4. So, the circumferential surface claimed in the '178 Patent serves to meet user expectations relating to the typical look, comfort, and wear-ability of a ring, and For at least these reasons there is no infringement under the doctrine of equivalents as well.

2. Limitation 1[b(ii)]: "the internal housing component coupled with the external housing component"

For all the reasons described above, the claims require an internal and external housing component and thus exclude unitary rings. These internal and external housing components must be distinct components that are assembled together. As discussed above, the resin (i.e., potting material) that Dr. Sarrafzadeh points to in the Ultrahuman Accused Products . *See* RX-0084C - RX-0086C. Thus, . For all the reasons described above, the Ultrahuman Accused Product's . Therefore, the Ultrahuman Accused Product does not infringe because

Moreover, Oura now points to a "crust" of the resin as being the "internal housing component." The parties agree that "coupled" is construed to mean "connected" and the

[redacted]

specification further clarifies that such a connection must be either "direct[]" or "through one or more intervening components." JX-0001.0073 at 9:8-10. The "crust" is thus not "connected" to the external housing component because the crust neither touches it directly, nor is it connected through a separate intervening component. To the extent the "crust" is the internal housing component, it is not connected to the external housing component.

3. Limitation 1[c]: a battery positioned within a cavity formed between the internal housing component and the external housing component, wherein the battery comprises a shape and size configured to fit within the cavity between the outer circumferential surface of the external housing component and the inner circumferential surface of the internal housing component, and wherein the battery extends through at least a first portion of the cavity of the finger-worn wearable ring device

For several reasons, the Ultrahuman Accused Products do not practice this limitation. The ALJ has adopted the parties' proposed construction that "within a cavity" as recited in each asserted claim means "within a hollow space." JX-0014.0005.

(a) The Ultrahuman Accused Products do not have any "cavity."

First, [redacted]. As noted above, the Ultrahuman Accused Product [redacted] (*see* RX-0084C - RX-0086.) [redacted].

(RX-0158C (annotated).)

Oura tries to collapse the battery and cavity limitations into one.

Dr. Sarrafzadeh's provides the below annotated image of a CT scan of the Ultrahuman Accused Product:

(RX-0402.97 (Oura annotations).). Dr. Sarrafzadeh then states that ” *Id.*,¶ 156 (emphasis added).

However, if the per the parties' agreed construction adopted by the ALJ. If a space is "fully occupied" it is not hollow. Oura's position seeks to eviscerate the cavity limitation. *See, e.g.* RX-0409.3 (Merriam Webster's Dictionary defining "hollow" as "an *unfilled* space") (emphasis added). But "[i]nventors are masters of their claims" and Oura cannot prove its infringement case by reading out express limitations in the claims. *See Bio-Rad Lab'ys, Inc. v. Int'l Trade Comm'n*, 998 F.3d 1320, 1331 (Fed. Cir. 2021). Indeed, if a fully occupied space can constitute a "hollow space," then the construction adopted by the ALJ would be rendered meaningless.

Acknowledging that ” RX-0402.103 ¶ 164 (emphasis added). But this concedes that the Ultrahuman Accused Products do not have the claimed cavity and undermines Oura's position.

The fact that the . JX-0011C.0014 at 50:15-51:22 In fact, Oura has no evidence that the Ultrahuman Accused Products have ever had their

components removed, nor provided any explanation as to how such removal would occur. Indeed,

s. Infringement here is judged at the time of importation or sale (*see* § 1337(a)(1)(B)(i)), and the Ultrahuman Accused Products . . (*See* CX-1069; CX-1089; RX-0428C; RX-0429C.) Moreover, (*see* RX-0084C - RX-0086C).

Oura's discovery answers about Dr. Sarrafzadeh's investigation further support that it . Specifically, . *See e.g.* RX-0204C.19-20 (Rog Resp. No. 12). Indeed, *AIA Eng'g Ltd. v. Magotteaux Int'l S/A*, 657 F.3d 1264, 1278 (Fed. Cir. 2011). Dr. Sarrafzadeh's analysis thus cannot be right.

Further, the battery and PCB of the Ultrahuman Accused products are themselves claimed elements.

[redacted]

It is also undisputed that [redacted]. *See* RX-0084C - RX-0086C; RX-0093 - RX-0117; RX-0157C - RX-0165C; RPHYS-0001.

Moreover, to the extent Oura contends the Ultrahuman Accused Product meets this limitation based on the doctrine of equivalents, that theory was not adequately presented and thus is improper.[10] Oura's position amounts to an allegation that a hollow space is equivalent to any space, rendering the word "hollow" in the agreed construction superfluous. *See* RX-0402.97, ¶ 156. The doctrine of equivalents may not be used to entirely vitiate a claim element. *Warner-Jenkinson Co. v. Hilton Davis Chem. Co.*, 520 U.S. 17, 39 n. 8 (1997).

Moreover, any argument related to the doctrine of equivalents is barred by the disclosure-dedication doctrine. This doctrine states that when a patent drafter discloses but declines to claim subject matter, this action dedicates the unclaimed subject matter to the public. *See, e.g., Eagle Pharms Inc. v. Slaybak Pharma LLC,* 958 F.3d 1171, 1175 (Fed. Cir. 2020). The '178 Patent discloses various embodiments that include hollow spaces when an internal housing component and external housing component are coupled to one another. *See, e.g.*, JX-0001 at Specification and Figures including, but not limited to, Fig. 15. The '178 Patent further discloses embodiments without a cavity, such as the embodiment of Figure 13. *See* JX-0001.0024 at Fig. 13; JX-0001.0075

[10] Ultrahuman reserves its right to preclude this undisclosed argument at the hearing.

at 18:62-19:15. Figure 13 shows that the battery and PCB are "encapsulated by the internal potting 1314" to "seal[s] the partially enclosed internal space 1320." In addition to the reasons described above, because the internal potting 1314 completely fills the "internal space 1320," Figure 13 does not have a hollow space and thus does not embody the claims. *Id.* The inventors of the '178 Patent claimed the embodiments of the '178 Patent that include a cavity, while at the same time disclosing other embodiments that do not include a cavity. Therefore, in doing so, Oura dedicated its disclosed, but not claimed, embodiments that do not include a cavity (e.g. Figure 13) to the public. *Eagle Pharms,* 958 F.3d at 1175. Thus, Oura cannot attempt to recapture this unclaimed subject matter.

(b) The Ultrahuman Accused Products do not have a cavity "formed between" the internal housing component and the external housing component

Second, the claims of the '178 Patent require "a cavity formed between the internal housing component and the external housing component," and then further specify that "the battery extends through at least a first portion of the cavity" and "the printed circuit board extends through at least a second portion of the cavity." Thus, the claims require a single cavity including both the battery and PCB that is "formed between" an internal housing component and an external housing component.

Again, through a majority of this Investigation, Oura has contended [redacted]." *See, e.g.,* RX-0402.51, ¶ 100. Under that interpretation, any [redacted] and thus is not "formed between" the internal and external housing components.

As noted above, in response to Respondents' Motion for Summary Determination, [redacted]t. Regardless, [redacted]

[redacted]. Under this interpretation, [redacted].

Indeed, Oura's expert opines [redacted] RX-0402.97, ¶ 156. In other words, [redacted]. Thus, at a minimum [redacted]

[redacted]

[redacted]

(c) The Ultrahuman Accused Products do not have a battery "comprising a shape and size configured to fit" within the alleged cavity.

Third, [redacted], the Ultrahuman Accused

Products .

The claim calls for a battery with a shape and size "that is configured to fit within the cavity" between the inner and outer circumferential surfaces. In other words, the claims require that the battery's shape and size is determined by the shape and size of the cavity formed between the housing components. Put simply, the claims require a pre-configured battery that is configured to fit within a predetermined cavity. This makes sense in the context of the specification which envisions bringing two components together with battery and PCB in between as shown in Figure 15: the cavity where the battery and PCB fit is predefined.

However, as discussed above, Ultrahuman's manufacturing process . *See* RX-0084C - RX-0086; RX-0093 - RX-0117; RX-0157C - RX-0165C; RPHYS-0001.

Indeed, . This is highlighted by the fact that Oura does not point to any evidence of the specific size or shape of the battery and how it is "configured" to fit into some undefined cavity. Further still, the Ultrahuman Accused Products

[redacted]

(d) The Battery in the Ultrahuman Accused Product is not Between an Outer Circumferential Surface and an Inner Circumferential Surface

For all the reasons described above, [redacted]. (*See supra*, Limitation 1(b)(i).) For that same reason, and specifically in view of Oura's statements regarding Niwa, [redacted].

4. Limitation 1[d]: a printed circuit board disposed between the internal housing component and the external housing component, wherein the printed circuit board extends through at least a second portion of the cavity of the finger-worn wearable ring device different from the first portion; and

The Ultrahuman Accused Products do not have [redacted]. Moreover, [redacted]. Ultrahuman incorporates all arguments with respect to internal housing component and cavity as described above

(RX-0158C (annotated); *see also* RX-0093 - RX-0117; RX-0157C - RX-0165C; RPHYS-0001.)

The Ultrahuman Accused Products also . Moreover, as discussed above, . There are at least two additional reasons why this limitation is not met by the Ultrahuman Accused Products.

(a) The Ultrahuman Accused Product's battery and PCB are not in separate portions of a single cavity.

Even accepting Oura's position that the areas completely occupied by the battery and PCB could each somehow be considered a "cavity," . In Dr. Sarrafzadeh's report,

Indeed, because Dr. Sarrafzadeh opines

[redacted]

(b) The Ultrahuman Accused Products do not have a second portion of a cavity including a PCB between circumferential surfaces

As noted above, the claims of the '178 Patent require that "the cavity [is] between the outer circumferential surface of the external housing component and the inner circumferential surface of the internal housing component." And the claims further require that "the battery extends through at least a first portion of the cavity" and "the printed circuit board extends through at least a second portion of the cavity." Thus, the claims of the '178 Patent require that both the first portion of the cavity containing the battery and the second portion of the cavity containing the PCB must be between the outer circumferential surface of the external housing component and the inner circumferential surface of the internal housing component.

For all the reasons discussed above with respect to the Niwa reference, to the extent that reference does not include a PCB between two circumferential surfaces, the Ultrahuman Accused Product does not infringe for the same reason. Indeed, [redacted]. Rather, as shown below in Dr. Sarrafzadeh's annotations, [redacted]

[redacted]

[redacted]

(RX-0402.116-117, ¶ 185 (annotation added showing flat portion).)

Specifically, Dr. Rosing stated that the prior art "does not disclose that the printed circuit board extends through a cavity 'between the outer circumferential surface of the external housing component and the inner circumferential surface of the internal housing component'" because the printed circuit board "is disposed in a region of the ring that has a flat (i.e., not circumferential) protrusion from the inner surface of the ring to contact the finger." RX-0411C.0127,¶ 277. Dr. Rosing then provided the below annotation of the prior art Niwa reference.

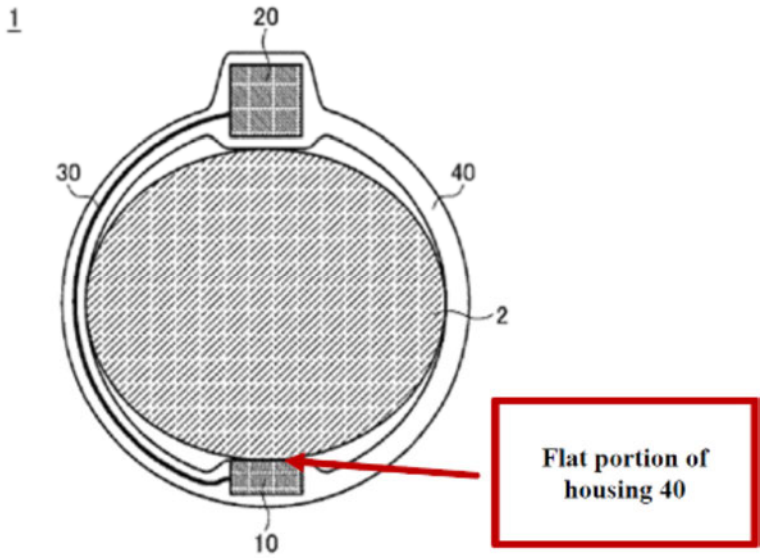

(*Id.*)

In other words, Oura's expert . A "patent may not, like a nose of wax, be twisted one way to avoid anticipation and another to find infringement." *CommScope Techs. LLC v. Dali Wireless Inc.*, 10 F.4th 1289, 1299 (Fed. Cir. 2021). Thus to the extent Niwa does not meet this claim limitation, the Ultrahuman Accused Product does not infringe for the same reason.

5. Limitation 1[e]: one or more sensors electrically coupled with the printed circuit board and the battery and configured to acquire data from the user through the internal housing component.

As discussed above, the . Therefore, the Ultrahuman Accused Product does not include .

E. Dependent Claim 2: "The finger-worn wearable ring device of claim 1, wherein the first portion of the cavity of the finger-worn wearable ring device is non-overlapping with the second portion of the cavity of the finger-worn wearable ring device."

Claim 2 is not infringed for at least the reasons discussed above regarding claim 1. Each of the noninfringement positions with regard to Claim 1 are incorporated by reference here. As discussed above, the Ultrahuman Accused Products

Moreover, even as alleged, Oura does not establish how any first portion of the cavity is non-overlapping with the second portion of the cavity. Regardless, as described above, to the extent

the Ultrahuman Accused Products .

F. Dependent Claim 12: "the finger-worn wearable ring device of claim 1, wherein the battery comprises a curved battery, wherein an arc of the curved battery approximates a corresponding arc of the external housing component."

Claim 12 is not infringed for at least the reasons discussed above regarding claim 1 and each of those noninfringement positions are incorporated as if fully stated herein. Further, at least the Ultrahuman Ring AIR comes in different sizes, . Nowhere does Oura attempt to meet its burden that each of these rings has an "arc of the curved battery that approximates a corresponding arc of the external housing component." *See* RX-0125C - RX-0134C; RX-0137C - RX-0142C; RX-0143C - RX-0156C. On top of that, in his expert report Dr. Sarrafzadeh . Oura does not meet its burden to prove that each of the Ultrahuman Accused Products meet this limitation. Therefore, this limitation is not met by the Ultrahuman Accused Product.

G. Dependent Claims 13 and 14: "The finger-worn wearable ring device of claim 1, wherein the one or more sensors comprise a first light-emitting component configured to emit light associated with a first wavelength, and a second light-emitting component configured to emit light associated with a second wavelength different from the first wavelength," and "The finger-worn wearable ring device of claim 13, wherein the first wavelength is associated with visible light, and wherein the second wavelength is associated with infrared light."

Claims 13 and 14 are not infringed for at least the reasons discussed above regarding claim 1 and each of those noninfringement positions are incorporated as if fully stated herein.

H. **Dependent Claims 17 and 18: "The finger-worn wearable ring device of claim 1, wherein the external housing component and the internal housing component define the cavity configured to at least partially surround the battery, and the printed circuit board, wherein one of the external housing component or the internal housing component comprises: a first side wall and a second side wall that extend between the internal housing component and the external housing component, wherein the cavity is defined at least in part by the outer circumferential surface, the inner circumferential surface, the first side wall, and the second side wall," and "the finger-worn wearable ring device of claim 17, wherein the first side wall, the second side wall, or both, are substantially perpendicular to the inner circumferential surface, the outer circumferential surface, or both."**

Claims 17 and 18 are not infringed for at least the reasons discussed above regarding claim 1 and each of those noninfringement positions are incorporated as if fully stated herein.

Moreover, claim 17 (and by dependency claim 18) recites, "wherein the cavity is defined at least in part by the outer circumferential surface, the inner circumferential surface, the first side wall, and the second side wall." However, Dr. Sarrafzadeh alleges However, as can be seen even under Dr. Sarrafzadeh's strained and incorrect interpretations,

(RX-0402.189-190, ¶ 288.).

Further, the claims require that one of the external housing component or the internal housing component, *not both*, comprises a first side wall and a second side wall. As shown above in the annotated image, Dr. Sarrafzadeh engages

[redacted] Dr. Sarrafzadeh's arbitrary line drawing exercise does not give a POSA reasonable certainty as to the scope of the claims and thus they are indefinite to the extent his claim interpretation is correct.

Therefore, this limitation in claims 17 and 18 is not met for this additional reason.

VI. THE ALLEGED DOMESTIC INDUSTRY PRODUCTS DO NOT PRACTICE THE ASSERTED CLAIMS OF THE '178 PATENT

A. Independent Claim 1

1. Limitation 1[a]: an external housing component defining an outer circumferential surface of the finger-worn wearable ring device

Complainants' allege that both variations of the Oura Gen. 3 (Horizon and Heritage) includes an external housing component that defines an outer circumferential surface. RX-402C at ¶¶ 82, 86. The Gen. 3 Heritage, however, does not have an external housing component that defines an outer circumferential surface.

CX-0142 (Heritage).

The above surface of the Heritage is not a curved surface because of the flat portion which Dr. Sarrafzadeh calls a "slight plateau design." Complainants' own documents refer to the Heritage ring as having "a smooth surface with a flat top," such that "wearers can easily identify the top of the ring and accurately position the ring so that the sensors are on the palm side of your finger closest to the arteries which give the most precise measurement." RX-0227C.2,10. *See also* RX-0229C at 5 ("Niwa's substrate is between two flat (not circumferential) surfaces."); RX-0123 at 52-54; CX-701 (Heritage).

Dr. Sarrafzadeh acknowledges that the outer profile of the Heritage is not circular and instead opines that the outer profile is "substantially circular" but does not explain his opinion. RX-0402C ¶ 87. Dr. Sarrafzadeh does not allege the outer profile of the Heritage is "ovular" or "elliptical" either. *Id.*

The top portion of the Heritage Gen. 3 Oura Ring helps orient the ring when worn by the user, whereas the claimed circumferential surface serves to meet user expectations relating to the typical look, comfort, and wear-ability of a ring. *See* RX-0322C, Curt von Badinski Tr. at 53:25-54:4 ("from an aesthetic perspective, a perfect circular ring is much more aligned with what people's expectations are for a ring, and we were[] definitely interested in that path of making it look like a normal ring.").

For at least these reasons, along with Dr. Sarrafzadeh's failure to properly allege doctrine of equivalents, the Heritage Gen. 3 ring does not meet this limitation under the doctrine of equivalents because the plateaued outer surface is not substantially the same as the claimed circumferential surface.

[redacted]

2. Limitation 1[b(i)]: an internal housing component defining an inner circumferential surface of the finger-worn wearable ring device

(a) The Oura Gen 3 Does not Have an "Internal Housing Component"

Complainant's Oura Gen 3 product does not have an "internal housing component" (i.e., an internal structure that encloses space) for the same reasons that Respondents' Accused Products do not have an internal housing structure. Like the Accused Product, the Oura Gen 3 Product is a single-enclosure embodiment, not the claimed dual-enclosure embodiment. The below images shows a cross-sections of the Oura Gen 3 Product with annotations provided by Dr. Sarrafzadeh:

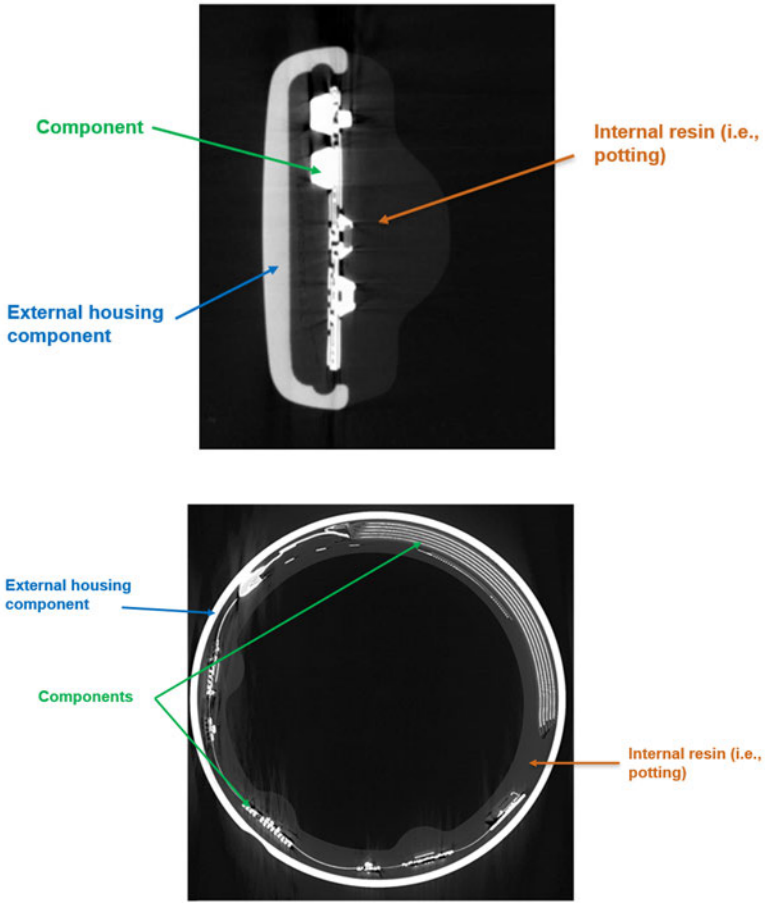

RX-0402C (annotations added); CX-0046; CX-0048.

As can be seen in the above images, the internal potting fills the entire space on the interior side of the alleged external housing. Dr Sarrafzadeh originally argued that the potting material in its entirety is the internal housing component. While he did not expressly say so during his deposition, it is anticipated that Dr. Sarrafzadeh will now argue that some arbitrary layer of the internal potting material is the internal housing component in the Oura Gen 3. Regardless of what Complainants argue, the Oura Gen 3 does not include an internal housing component.

(i) The Oura Gen 3's Potting in its Entirety is not an "Internal Housing Component"

The potting in its entirety in the Oura Gen 3 product is not an internal housing component because it is not a structure that encloses space. It is just the opposite in fact—the potting fills space, which is consistent with its overall function and purpose.

The specification of the '178 Patent makes clear that potting that entirely fills space where the PCB and battery reside does not enclose space. For example, Figure 13 shown below discloses internal potting **1314** that entirely fills the space where the PCB **1340** and battery **1330** reside.

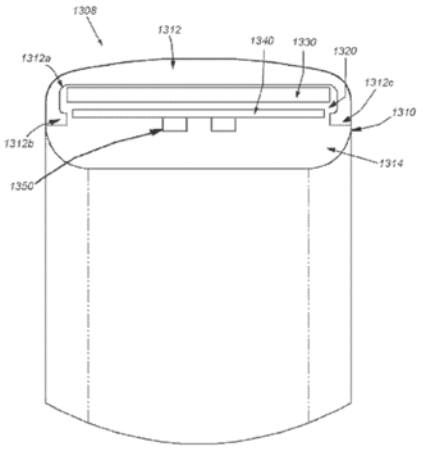

FIG. 13

But the '178 Patent expressly discloses that internal potting does ***not*** enclose anything, including space **1320**. Rather, the '178 Patent discloses that space **1320** is only "partially enclosed"

and that partial enclosing is performed ***solely*** by external housing **1312**: "The external housing includes flanges **1312b-c** that extend toward each other, beyond portions of the internal surface **1312a**, to define a ***partially enclosed*** internal space **1320**." JX-0001 at 19:3-6. When speaking of the internal potting **1312**, the '178 Patent does not disclose that it encloses anything. In fact, it expressly notes that even after internal potting **1314** is applied, space **1320** is still only partially enclosed: "The internal potting **1314** can extend between flanges **1312b-c** and can seal ***partially*** enclosed space **1320**." *Id.* at 19:10-13. If internal potting **1314** enclosed space, then space **1320** would not be referred to as only "partially enclosed," but rather enclosed or fully enclosed.

Importantly, while RingConn does not necessarily agree, it recognizes that the claim construction allows for a housing component to be formed of potting material to the extent that is even possible. Figure 12 shown below is an example of potting material **1214** that appears to be enclosing space **1220**, at least as depicted in this figure.

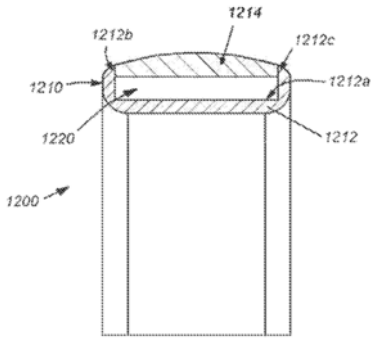

FIG. 12D

In contrast to Figure 13, the potting material in Figure 12 is expressly disclosed as part of what is enclosing space **1220**: "The external potting 1214 can extend between the flanges 1212b and 1212c of the internal housing ***to provide an internal space 1220*** to accommodate one or more components." *Id.* at 18:15-18. Notably, the internal space in this Figure 12 embodiment is not disclosed as only "partially enclosed." Thus, potting material can be a housing component so long as it is enclosing space and not filling it.

[redacted]

Accordingly, the potting material in its entirety in the Oura Gen. 3 is not an internal housing component

(ii) Complainants' Arbitrary Portion of Potting in the Oura Gen 3 is not an "Internal Housing Component"

To the extent that Complainants now allege that only a portion of the potting used in the Oura Gen 3 is the internal housing component, that argument fails. As an initial matter, to the extent either Complainants or Dr. Sarrafzadeh plan to make this argument, neither have identified what portion of the potting in the Oura Gen 3 comprises the internal housing component as recited in claim 1. To the extent Dr. Sarrafzadeh now claims that the internal housing component is only a portion of the potting material, he did not annotate any images of the Oura Gen 3 product during his deposition to identify specifically what portion of the potting in the Oura Gen 3 is the internal housing component. Indeed, the original images from Dr. Sarrafzadeh's expert report are all that appear in this record regarding Complainants' alleged internal housing component in Oura Gen 3, and they include the following:

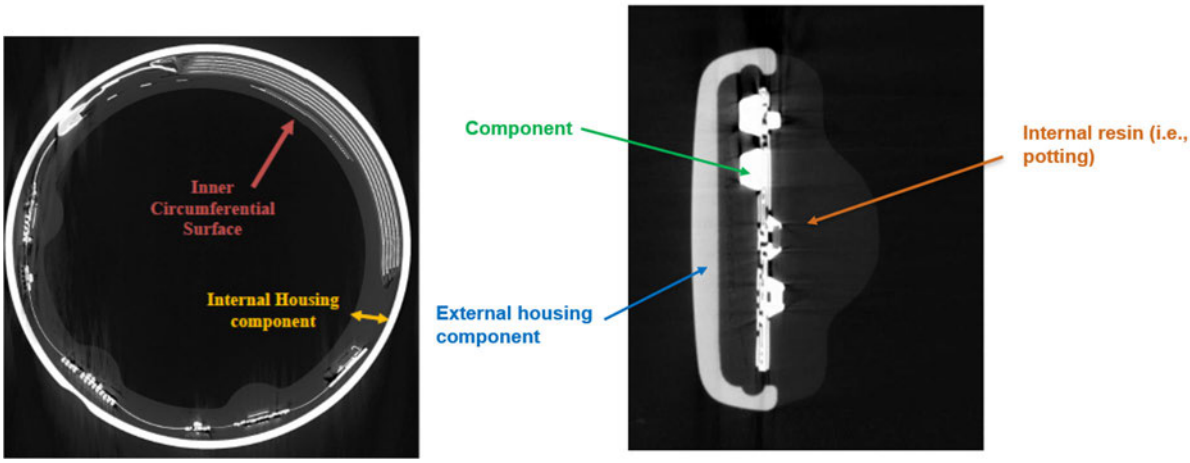

CX-0046; RX-402C ¶ 120; CX-0048.

Needless to say, to the extent Complainants and Dr. Sarrafzadeh are now arguing that only a portion of the potting material is the internal housing component, these images from Dr.

Sarrafzadeh's expert report are of no help in identifying the bounds of that portion (i.e., where it begins and where it ends). Regardless of what portion of the potting material Complainants and Dr. Sarrafzadeh may now claim is the internal housing component, the argument lacks merit for several reasons.

First, the claims require an "internal housing ***component***", and an arbitrary ***portion*** of potting material is not a housing ***component***. Complainants and their two experts Dr. Sarrafzadeh and Dr. Rosing seem to agree, at least with respect to unclaimed embodiments of the '178 Patent and the prior art.

For example, Dr. Sarrafzadeh opines that Figure 16 of the '178 Patent (shown below) is not an embodiment of the claims. RX-0325C at 244:5-11 ("Looking at the description of figure 16 …, I believe this is not an embodiment of Claim 1….").

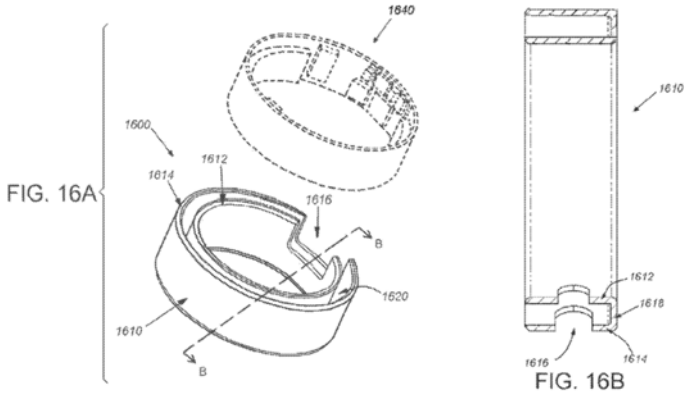

The reason Dr. Sarrafzadeh does not believe Figure 16 is an embodiment of the claims is that the housing 1610 is a unitary structure, and he believes that a POSA allegedly understands that ***portions*** of a single structure cannot be considered a housing component. Indeed, Dr. Sarrafzadeh testified that "reading what figure 16 describes, the whole thing of 1610 [is] a[] housing and [inner wall] 1612 and [outer wall] 1614 simply describe[e] different ***parts*** of a housing and ***not the components*** that is required in claim 1." RX-0325C at 251:15-19. He went on to state that "the

housing … is one housing … and calling the same structure as both … internal housing component and external housing component is not how I read the embodiment of figure 16." *Id.* at 244:14-19. In his opinion, "you can't use the same component for two different things[, such as an] external housing component and internal housing component." *Id.* at 245:1-3. At least with respect to Figure 16, Dr. Sarrafzadeh does not believe that portions of a unitary structural component can themselves be considered housing "components."

But Dr. Sarrafzadeh defies his own logic in now arguing that a portion of the potting material used in the Accused Products can be an internal housing component. Had he applied the same rationale used in his opinions for Figure 16 to the Oura Gen 3, Dr. Sarrafzadeh would have concluded that an arbitrary portion of the potting structure is not an internal housing component. Indeed, there is no demarcation marking or indicating where Dr. Sarrafzadeh's arbitrary internal housing component begins and ends. The potting material is the same material throughout, and no arbitrary portion of it can fairly be considered an internal housing component.

Complainants also attempt to distinguish the prior art on the ground that a ***portion*** of a unitary structure cannot be an internal or external housing component. For example, in Complainants' Final Non-Burden Contentions, they allege that "Respondents appear to simply point to ***different portions of the same unitary structure***, ***rather than a component***, as allegedly meeting both the external housing component and internal housing component limitation. RX-0432 at A1 Validity Claim Chart at 2. Similarly, in their Patent Owner's Preliminary Response ("POPR") relating to pending Post Grant Review No. 2024-00030, Complainants argued that prior art reference "Niwa does not disclose or suggest internal and external housing components, as claimed. Rather, Niwa discloses ***a unitary, component-less housing*** 40, shown in Fig. 23[.]" RX-0123 at 52-53. Complainants even criticized Petitioner for "identifying ***sections*** of the

unitary housing 40 as being 'components'". *Id.* at 53 Complainants concluded that "Petitioner's interpretation of Niwa reads … 'component' … completely out of the claims." *Id.* These positions simply cannot be reconciled with Complainants' current position that a portion of the unitary potting material in the Oura Gen 3 is an internal housing component.

Second, the specification does not disclose or support any contention that an arbitrary ***portion*** of potting material can be a housing component. Indeed, nowhere in the specification is there any suggestion, hint or even mention of a portion of potting material being anything, let alone a housing component. In fact, when given the opportunity to describe and identify an alleged internal housing component in a figure of the '178 Patent where potting material fills the area where the components reside (i.e., Figure 13), Dr. Sarrafzadeh did not identify a ***portion*** of the potting material as the internal housing component. Instead, as shown below, he called the ***entirety*** of the potting material the internal housing component, which is compelling evidence that not even he truly believes that a mere portion of potting material is an internal housing component. *See* Infringement Report at ¶36 below.

[redacted]

36. Fig. 13 below shows a cross section of one embodiment of the ring having a housing 1310 that includes an external housing component 1312 and an internal potting or encapsulant 1314 (i.e., internal housing component). *Id.*, 18:64-67. A space 1320 is formed that is occupied by battery 1330 and printed circuit board 1340. *Id.*, 19:6-10.

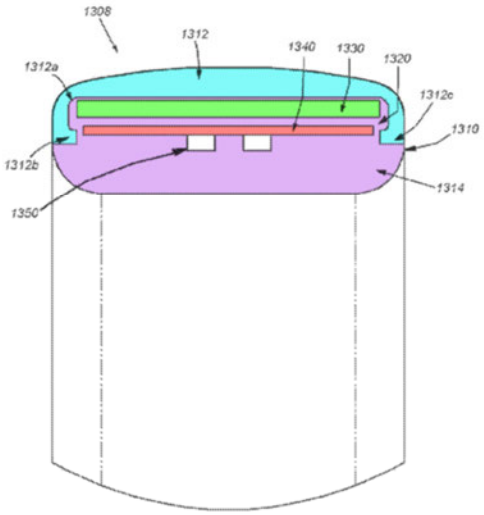

FIG. 13

If Dr. Sarrafzadeh truly believed that the internal housing component in an "external housing—internal potting" embodiment of the type disclosed in Figure 13 is simply a portion of the potting material, he would have certainly identified the internal housing component as such. His decision to identify the entirety of the potting material as the internal housing component as opposed to just some portion of it is fatal to Complainants' new argument regarding the alleged internal housing component.

Third, whatever arbitrary portion of the potting material that Complainants now allege is the internal housing component in the Oura Gen 3 is not a "structure that encloses space" as required by the ALJ's claim construction. Indeed, any such arbitrary portion of potting material encloses nothing. It just abuts more potting, which under Complainants' rationale means that the internal housing component made from potting just encloses more potting. That does not make sense.

Dr. Sarrafzadeh's opinions regarding the embodiment disclosed in Figure 16 further support Respondents' argument here. He testified that "wall 1612 [in Figure 16] is just a surface by itself…. Therefore, it's not clear that 1612 encloses space and if so, which space." RX-0325C at 249:2-7. Likewise, the arbitrary portion of potting that Complainants allege as the internal housing component "is just a surface by itself" and, therefore, "it's not clear that [it] encloses space and if so, which space." A finding that an outer arbitrary portion of a larger, solid structure is a "structure that encloses space," would mean that outer surfaces of any solid objects cam be considered a "housing component"—an absurd result. For example, a snowball and an ice-cube would both be considered to have an outer housing component under Complainants' rationale.

(b) The Oura Gen 3 and Gen 4 do not Have and "Inner Circumferential Surface"

(i) Oura Gen 3.

The Oura Gen. 3 also do not include an "inner circumferential surface." The surfaces identified by Dr. Sarrafzadeh are not circumferential. CX-0701; CX-0702; RX-0402C ¶ 122. The identified features have bumps or spheres in the resin over some of the components. As seen below, due to these features, a POSITA would understand that the inner surface profiles (in red) of the Oura Gen. 3 designs have perimeters—not a circumference. These surfaces are not "circumferential" under that term's plain and ordinary meaning.

[redacted]

CX-0702 (Horizon) (annotations added)

CX-0701 (Heritage) (annotations added)

The Oura Gen. 3 rings include non-circumferential surfaces that control the rotation to the charger and indicate proper orientation to the user which further supports the conclusion that the inner surfaces are not circumferential. *See e.g.,* RX-0064, RX-0065.

Dr. Sarrafzadeh alleges that the inner surfaces of the Oura Gen. 3 rings are "substantially circular" and that "the claim does not require that the entire inner surface to have the same uniformity" but does not explain his opinion. RX-0402C ¶ 124. Any implication on the part of Dr. Sarrafzadeh that this limitation is satisfied under the doctrine of equivalents is incorrect. The three domes (1) focus light for the photodiodes; (2) protect the photodiodes while maintaining a slim profile; (3) prevent the ring from moving along the user's finger to ensure a consistent measurement location; and (4) help the user orient the ring while using and charging the ring. All of these functions would be diminished if the Oura Gen. 3 had a circular, ovular, or elliptical inner surface, or an inner surface with a circumference—eliminating the domes.

These are substantially different functions, done in a substantially different way, to achieve substantially different results, than the claimed circumferential surface, which can be oriented in any direction. *See e.g.*, JX-0001, '178 Patent at 14:7-14. For example, Curt von

Badinski, an inventor of the '178 Patent has testified that "from an aesthetic perspective, a perfect circular ring is much more aligned with what people's expectations are for a ring, and we were[] definitely interested in that path of making it look like a normal ring." RX-0322C, Curt von Badinski Tr. at 53:25-54:4. So, the circumferential surface claimed in the '178 Patent serves to meet user expectations relating to the typical look, comfort, and wear-ability of a ring; while the domes help ensure consistent and accurate measurements, protect the photodiodes, and help orient the ring for the user and for charging. For at least these reasons, along with Dr. Sarrafzadeh's failure to properly allege doctrine of equivalents, there is therefore no infringement under the doctrine of equivalents.

Dr. Sarrafzadeh's assertion that "the claim does not require that the entire inner surface to have the same uniformity" also lacks merit. RX-0402C ¶ 124. The claim calls for a "circumferential" inner surface. If the inventors wanted to limit "circumferential inner surface" to only a portion of the inner surface having to be circumferential, they would have expressly done so. Indeed, the inventors demonstrated that when they wanted a claim limitation to include only a portion of an element, the inventors expressly said so in the claim by reciting the term "portion." They failed to do so with respect to "circumferential".

Mr. Alarcon will testify that, additionally, the POSA would not understand only the portion of the inner surface around the battery is an inner circumferential surface. The ALJ issued the claim construction ruling stating that "circumferential" had its plain and ordinary meaning and did not require a closed shape. The inner surface of the Oura Gen. 3 product is a closed shape but it is not circumferential because it has a flat portion and epoxy bumps as part of the surface

[redacted]

(ii) Oura Gen 4

The Oura Ring Gen. 4's internal housing component does also not define an inner circumferential surface. As seen below, the inner surface of the Oura Ring Gen. 4's alleged internal housing component has small bumps and two divots along the alleged internal surface that likewise control rotation to the charger such that the ring can charge. RX-0066; *See* RX-0402C at ¶ 233. A POSITA would understand that the alleged inner surface (green), due to either of these features, is not circumferential under the plain and ordinary meaning of circumferential.

CX-0699.

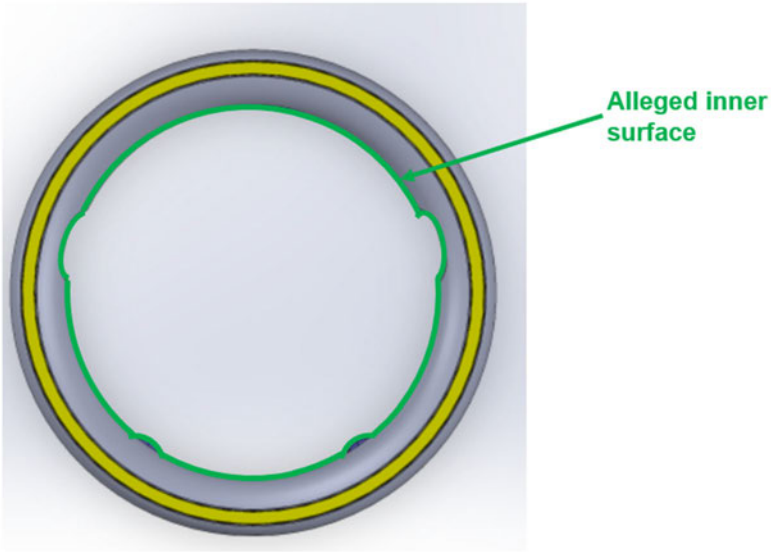

RX-0077.66 (green annotations added).

Dr. Sarrafzadeh does not allege doctrine of equivalents here, but this structure is different than having an inner circumferential surface. The divots hold the ring in place when worn by a user to secure the ring for consistent measurement location and the bumps are used to direct light to the photodiodes. Both features (bumps and divots) control the orientation of ring for charging.

These are substantially different functions, done in a substantially different way, to achieve substantially different results, than the claimed circumferential surface, which can be oriented in any direction. JX-0001, '178 Patent 14:7-14. For example, Curt von Badinski, an inventor of the '178 Patent has testified that "from an aesthetic perspective, a perfect circular ring is much more aligned with what people's expectations are for a ring, and we were[] definitely interested in that path of making it look like a normal ring." RX-0322, Curt von Badinski Tr. at 53:25-54:4. So, the circumferential surface claimed in the '178 Patent serves to meet user expectations relating to the typical look, comfort, and wear-ability of a ring; the divots facilitate consistent measurement locations; and the domes are there to direct light to the photodiodes. For at least these reasons, along with Dr. Sarrafzadeh's failure to properly allege doctrine of equivalents, the Oura Ring Gen. 4 does not meet this limitation.

3. Limitation 1[b(ii)]: "the internal housing component coupled with the external housing component"

(a) Oura Ring Gen. 3

The Oura Gen. 3 Ring (either design) does not have an "internal housing component coupled to an external housing component" because the Oura Gen. 3 Ring does not have an "internal housing component."

[redacted]

(b) Oura Ring Gen. 4

In the Oura Gen. 4, the alleged internal and external housing components are not coupled (construed to mean "connected"). The Oura Gen 4 is shown below with annotations from Dr. Sarrafzadeh's report.

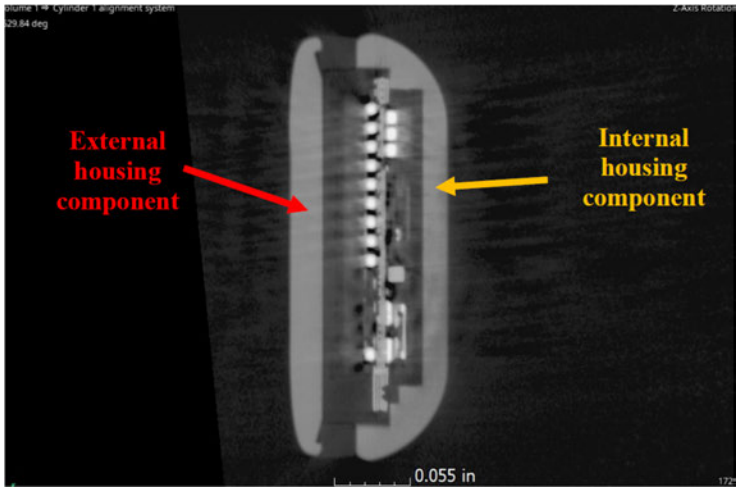

CX-0076C. As this image shows, the alleged "internal housing component" is not "connected" with the alleged "external housing component."

4. Limitation 1[b(iii)]: wherein at least a portion of the inner circumferential surface of the internal housing component is configured to contact a tissue of a user when the finger-worn wearable ring device is being worn by the user;

(a) Oura Ring Gen. 3

Mr. Alarcon will testify that this element of claim 1 is not met by the Oura Ring Gen. 3. The Oura Ring Gen. 3 does not include "an inner circumferential surface of the internal housing component [that] is configured to contact a tissue of a user when the finger-worn wearable ring device is being worn by the user." As noted above, the Oura Gen. 3 does not include an "internal housing component" and the inner surface of the Oura Gen. 3 includes three domes to direct light to the photodiodes, and is therefore not "circumferential."

[redacted]

(b) Oura Ring Gen. 4

Similarly, the Oura Ring Gen. 4 does not include "an inner circumferential surface of the internal housing component [that] is configured to contact a tissue of a user when the finger-worn wearable ring device is being worn by the user." As noted above, the alleged inner surface of the Oura Gen. 4 includes two divots and small domes, and is therefore not "circumferential."

5. Limitation 1[c]: a battery positioned within a cavity formed between the internal housing component and the external housing component, wherein the battery comprises a shape and size configured to fit within the cavity between the outer circumferential surface of the external housing component and the inner circumferential surface of the internal housing component, and wherein the battery extends through at least a first portion of the cavity of the finger-worn wearable ring device;

(a) The DI Products do not have a "cavity"

The ALJ adopted the parties agreed-upon construction that "cavity" means "a hollow space." JX-0014 Construing Claim Terms ("JX-0014"), EDIS Doc. ID No. 835448 at 5. The Oura Gen. 3 and Gen. 4 products do not have any hollow space.

As the images below make illustrate, the Oura Gen. 3 and Gen. 4 products as imported, sold and used in the U.S. do not include any hollow space, but rather are filled with potting material and components.

[redacted]

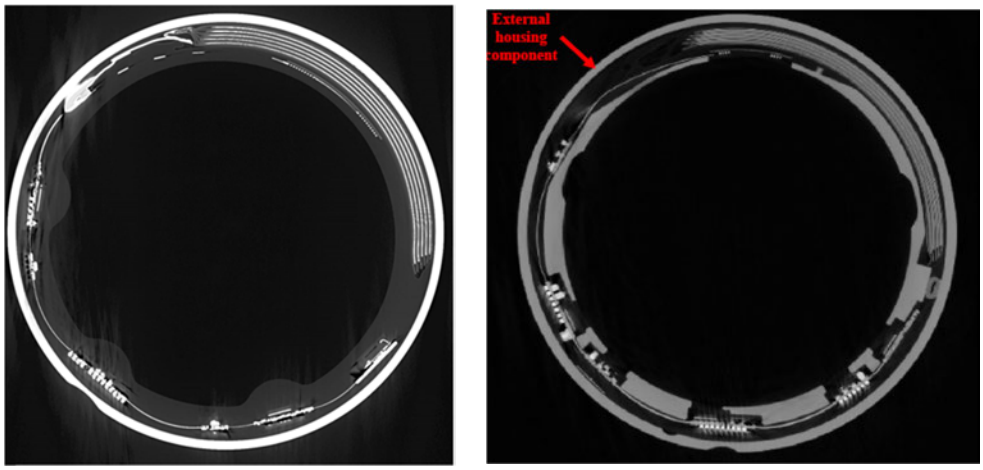

CX-0046; CX-0074C. Given that the entire body of the Oura Gen. 3 and Gen. 4 is filled, these products are the opposite of something that is hollow.

Nonetheless, Complainants still assert that the Oura Gen. 3 and Gen. 4 has a cavity (i.e., a hollow space). In particular, they assert that the area occupied by the battery and PCB encircled in yellow in the images below (Gen. 3 and left and Gen. 4 on right) is the cavity (i.e., hollow space).

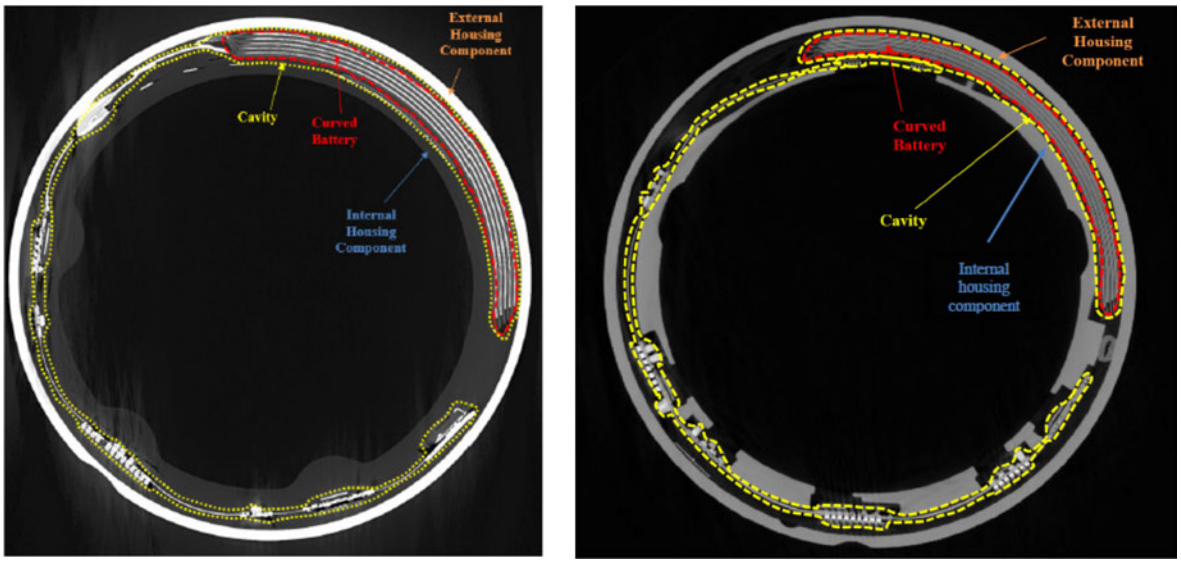

CX-0046; CX-0074C; RX-0402C ¶¶ 169, 175.

The problem with Complainants line drawing exercise is that the areas in yellow are fully occupied, which is the opposite of hollow. Indeed, Complainants do not dispute that the battery and PCB fully occupy what Complainants contend is the alleged cavity in the Oura Gen. 3 and Gen. 4. Instead, Complainants' position is that an area that is fully filled (i.e., occupied) by components somehow still qualifies as a "hollow space." But a "hollow space" is ***the exact opposite*** of a filled space, and Complainants' position seeks to eviscerate the "cavity" limitation. *See* RX-0409 (Merriam Webster's Dictionary defining "hollow" as "an ***unfilled*** space") (emphasis added). Indeed, if a fully occupied space can constitute a "hollow space," then the parties' agreed-upon construction—adopted by the ALJ—would be rendered meaningless. A "hollow space" would mean exactly the same thing as a "filled space", and that simply cannot be the case.

Complainants' attempt to overcome this problem by arguing that "***if the components were to be removed from the solidified structure***, there would exist a hollow space in its place[]." RX-0402C at ¶¶ 156, 164, 170, 176 (emphasis added). Complainants provide no other explanation for how the solid Oura Gen. 3 and Gen. 4 have an empty space. The problem with Complainants' argument is that removal of the claimed PCB and battery to create a hollow space would take the DI Products outside the scope of the claims for new reasons, as the PCB and battery are both claimed components. Moreover, Complainants' apparent attempt to modify the products in order to allege infringement is improper and inconsistent with Federal Circuit precedent. *High Tech Medical Instrumentation, Inc. v. New Image Indus., Inc.*, 49 F.3d 1551, 1555 (Fed. Cir. 1995) ("[A] device does not infringe simply because it is possible to alter it in a way that would satisfy all the limitations of a patent claim.") In this case, Complainants do not allege that removing the battery and printed circuit board would be possible or that it would result in a functioning device; nor have Complainants alleged that they intend for the user to remove the battery or printed circuit board.

What's more, the claims require both "a cavity formed between the internal housing component and the external housing component" and "the internal housing component coupled with the external housing component." Accordingly, to meet the claims a hollow space must exist when the alleged internal housing component and external housing component are coupled or connected. Yet, here it is undisputed that when the potting material of the Oura Gen. 3 and Gen. 4 is applied to the metallic ring, the potting material fully encapsulates the components, leaving no hollow space in the Accused Products.

Complainants resort to arguing that Respondents' contentions improperly rely on a claim construction that excludes embodiments and thus cannot be correct. This is plainly not the law, and Complainants know it as they too assert that disclosed embodiments (e.g., Figure 16) are not covered by the claims. It is a bedrock principle of patent law that the claims of a patent need not cover every disclosed embodiment. *See August Technology Corp. v. Camtek, Ltd.*, 655 F.3d 1278, 1285 (Fed. Cir. 2011) ("The mere fact that there is an alternative embodiment disclosed in the asserted patent that is not encompassed by our claim construction does not outweigh the language of the claim"); *see also SIMO Holdings, Inc. v. H.K. uCloudlink Network Tech., Ltd.*, 983 F.3d 1367, 1378-1380 (Fed. Cir. 2021). Complainants' cannot be heard to assert otherwise given that they too allege that certain disclosed embodiments are not covered by the asserted claims. RX-0325 at 244:5-11 ("Looking at the description of figure 16 …, I believe this is not an embodiment of Claim 1….").

As discussed *supra*, the majority of the relevant embodiments disclosed in the specification do include a hollow space. For example, Figures 8 and 15B shown below are two of these embodiments.

[redacted]

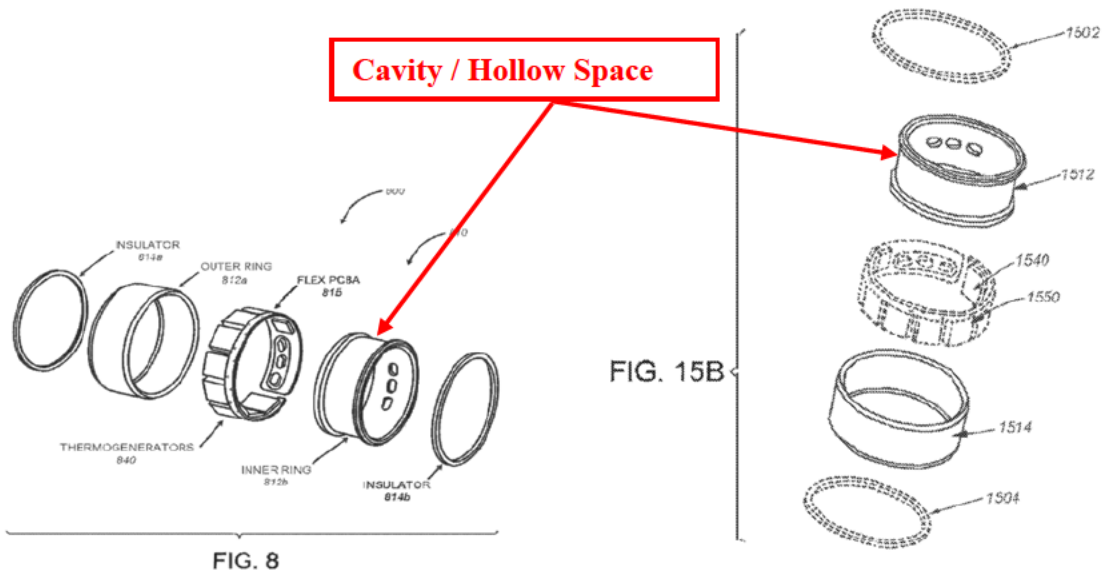

As shown above, these embodiments comprise the claimed elements, including an unnumbered cavity / hollow space formed between the internal housing component 812b / 1512 and the external housing component 812a / 1514.

Figures 12 and 14 of '178 Patent shown below likewise disclose hollow spaces where components between two enclosing structures.

Perhaps most damaging to Complainants' argument is the critical fact that the space that Complainants allege is the cavity (denoted by the yellow circles drawn around the components in the images above) never actually exists as a hollow space. And while Complainants allege that removing the battery and PCB from the Oura Gen. 3 and Gen. 4 will reveal a hollow space, that is not actually true. As Complainants' tear downs make clear, one cannot remove the components from these types of products without destroying what Complainants are calling the cavity. Thus, ***this mythical hollow space that Complainants allege is the cavity never actually exists***.

[redacted]

(b) The DI Products do not have "a cavity formed between the internal housing component and the external housing component"

(i) Oura Gen. 3

If Complainants and Dr. Sarrafzadeh are held to their original infringement theory alleging that the entire potting material in the Oura Gen. 3 is the internal housing component, or if the Staff adopts such a theory, then the alleged cavity in the Oura Gen. 3 is not "formed between the internal housing component and the external housing component" as required by the asserted claims. That is because the potting material in the Oura Gen 3 fully encapsulates the alleged cavity and, thus, the cavity cannot be between the potting material and anything else.

As shown below in the annotated and unannotated images, the alleged cavity in the Oura Gen. 3 surrounds and is coextensive with the PCB and the battery.

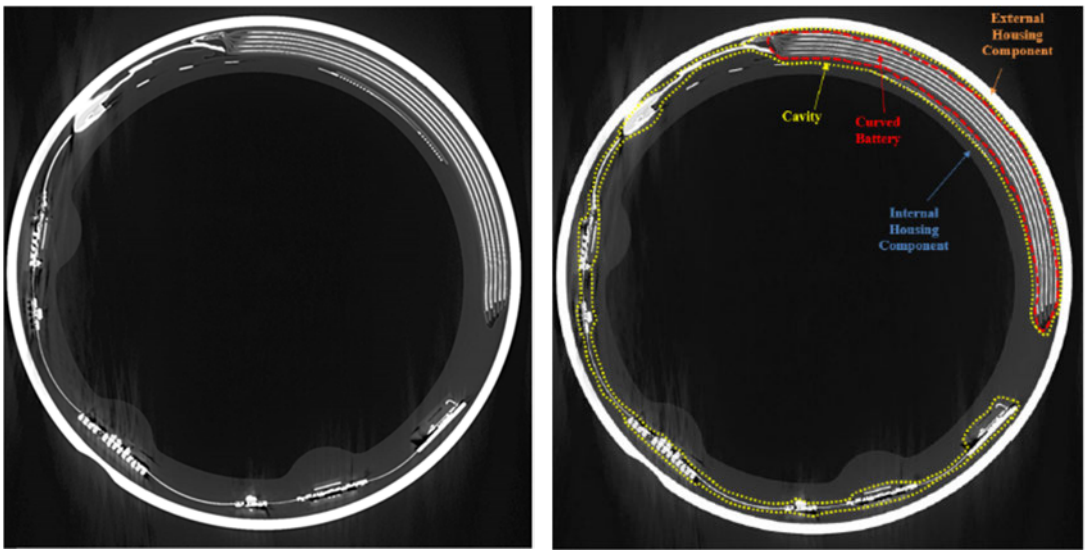

CX-0046, RX-402C.100.

As the images above clearly show, the potting material completely surrounds and encapsulates the components and, therefore, the alleged cavity. Thus, the alleged cavity is not between any internal housing component and external housing component—since the cavity is

surrounded by the potting material, it cannot be between the potting material and anything else. To argue otherwise would not make any sense.

Even if some portion of the cavity were not surrounded by potting and came into contact with the metallic housing, that does not change the fact that the alleged cavity is ***not*** formed between the potting and the metallic housing. There is no dispute that the claims recite that the cavity—and not just some portion of it—is formed between the internal housing component and external housing component. The claim language demonstrates that the inventors would deliberately use the term "portion" when they wanted to refer to only a portion of something. For example, the claims recite "a portion of the inner circumferential surface of the internal housing component is configured to contact a tissue of a user." JX-0001 at claim 1. Moreover, claim 1 of the '178 Patent recites a "first portion of the cavity" and a "second portion of the cavity." Thus, when the claims recite a "cavity formed between" the internal and external housing components, it does not mean just some portion of the cavity—it means all of it. That is entirely consistent with the claimed embodiments in the specification showing the hollow spaces that are entirely between internal and external housing components.

Here, Complainants cannot dispute that the cavity is surrounded entirely by potting, but even if they could, they cannot dispute that most of the cavity is surrounded by potting. Thus, there can be no dispute that at least the vast majority of the alleged cavity is not formed "between" the potting material and the metallic ring

Regardless, even accepting the "crust" as the internal housing component, any alleged cavity is entirely within the remaining potting material, and thus such potting material prevents the cavity from being "between" the alleged internal and external housing components. Under this interpretation, the alleged cavity would instead be "formed between" the "crust" on the one

[redacted]

hand and the remaining potting material on the other. But the claims require the cavity to be formed between the internal and external housings—any potting material between the "crust" and the metal portion of the ring prevents this limitation from being met.

(ii) Oura Gen. 4

The Oura Gen. 4 does not have a cavity for the reasons discussed above and, thus, does not have a "cavity formed between the internal housing component and external housing component."

(c) The DI Products do not have "a battery positioned … and comprising a shape and size configured to fit within the cavity"

Based on the express language of the claim, the claimed cavity is a hollow space that exists and is defined independently of the battery. The claim language makes this clear when it recites that the battery is "***positioned*** within the cavity" and is of a "***size and shape configured to fit within the cavity***." If the claims require that the battery is "positioned within the cavity," and that the battery is "size[d] and shape[d] … to fit within the cavity," then that cavity (i.e., hollow space) must be defined and exist independently of the battery so that the battery can be "positioned" and "size[d] and shape[d] … to fit" within that hollow space. In other words, the claimed battery cannot define the cavity or dictate it's shape because the claims require a cavity in which the battery "is positioned" and "size[d] and shape[d]" to fit.

Complainants, however, have it backwards. Under Complainants' theory, the cavity in the DI Products does not exist independent of the battery. Indeed, under Complainants' theory, the battery, PCB and potting material define the alleged cavity. The larger the battery, the larger the alleged cavity. Likewise, the smaller the battery, the smaller the alleged cavity. Under Complainants' infringement theory, the alleged cavity is entirely dependent on and defined by the shape and size of the battery and PCB. But this infringement theory ignores the claim

[redacted]

language calling for "a battery ***positioned within a cavity***," and of "a shape and size ***configured to fit within a cavity***." A cavity's existence that is wholly dependent on the existence of a battery and PCB and does not exist without them is not a cavity in which a battery "is positioned" and "shape[d] and size[d] to fit." By the express language of the claims, the cavity (i.e., a hollow space) must be independently formed between an internal and external housing, and the battery must be "positioned … and shape[d] and size[d] to fit within th[at] cavity." The DI Products simply do not have these claimed elements.

(d) The Battery in the DI Products is not Between an Outer Circumferential Surface and an Inner Circumferential Surface

For all the reasons disclosed above, the DI Products do not include the claimed "inner circumferential surface." Thus, the DI products do not disclose a battery between any "inner circumferential surface" and an "outer circumferential surface."

6. Limitation 1[d]: a printed circuit board disposed between the internal housing component and the external housing component, wherein the printed circuit board extends through at least a second portion of the cavity of the finger-worn wearable ring device different from the first portion; and

The Oura Gen. 3 does not practice this limitation for several reasons.

(a) The Oura Ring Gen. 3 does not have a "printed circuit board disposed between the internal housing component and the external housing component"

If Complainants and Dr. Sarrafzadeh are held to their original infringement theory alleging that the entire potting in the Oura Gen. 3 is the internal housing component, or if the Staff adopts such a theory, then the PCB in the Oura Gen. 3 is not "disposed between the internal housing component and the external housing component" as required by the asserted claims. That is because the potting used in the Oura Gen. 3 completely surrounds the PCB. And since

[redacted]

the potting completely surrounds the PCB, the PCB cannot be between the potting and any other component.

In the image below of the Oura Gen. 3, it is plainly evident that PCB is completely surrounded by potting material.

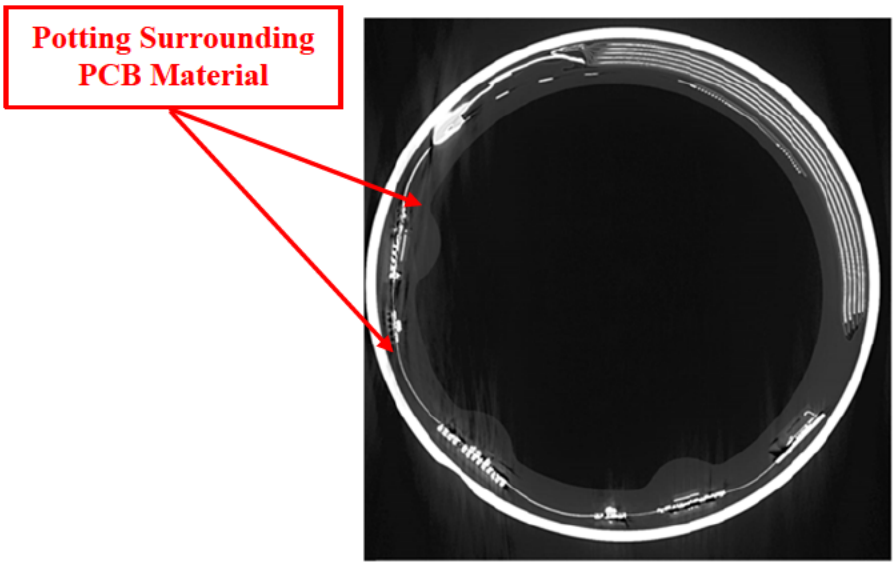

CX-0046.

Complainants' expert Dr. Sarrafzadeh expressly admitted that the PCB is encapsulated in potting and does not touch the internal surface of the metallic ring (what Complainants call the external housing component), and that there is a good reason for that. Specifically, he testified that "[y]ou don't want the PCB to be pushed against the housing component because that will create shorts and other undesirable electrical characteristics." RX-0325 at 91:24-92:1. He further testified that "there are also electrical reason[s] of shielding nature where you do want to have an adhesive between printed circuit board and external housing component in some products including RingConn Products." *Id.* at 142:11-18. Accordingly, Complainants do not dispute that there is material that surrounds the entirety of the PCB.

Accordingly, to the extent that any party alleges that the potting in the Oura Gen. 3 is the internal housing component, the Oura Gen. 3 does not infringe because the PCB is not "disposed

between the internal housing component and the external housing component" as required by the claims. Rather, the PCB is completely surrounded by the potting, which means it cannot be between the potting and anything else.

(b) The Oura Gen. 3 and Gen 4. do not have a Battery and PCB in Two Separate Portions of a Single Cavity

The battery and PCB are not extending through two portions of the same, singular cavity as required by the claims. In Dr. Sarrafzadeh's report, the alleged space occupied by the PCB and the alleged space occupied by the battery are fully encapsulated by and therefore separated by potting material and cannot be considered part of the same alleged cavity. Indeed, because Dr. Sarrafzadeh opines that the "battery fully occupies the cavity," RX-0402C ¶¶ 170, 176, then the printed circuit board cannot exist in the same cavity as the battery. Thus, the battery and the PCB of the Our Gen. 3 and Gen. 4 are not in different portions of the same cavity as required by the claims. CX-0046; CX-0074C.

7. Limitation 1[e]: one or more sensors electrically coupled with the printed circuit board and the battery and configured to acquire data from the user through the internal housing component.

As discussed above, the Oura Gen. 3 does not include an "internal housing component." Therefore, the Oura Gen. 3 does not include sensors "configured to acquire data from the user through" an internal housing component.

B. Dependent Claim 2: "The finger-worn wearable ring device of claim 1, wherein the first portion of the cavity of the finger-worn wearable ring device is non-overlapping with the second portion of the cavity of the finger-worn wearable ring device."

(a) Oura Ring Gen. 3

As discussed above, the Oura Gen. 3 does not include a "cavity," much less "a first portion of the cavity," and a "second portion of the cavity." Moreover, even as alleged, Dr. Sarrafzadeh does not establish how any first portion of the cavity is non-overlapping with the

second portion of the cavity. As shown below, the PCB with the charging coil is shown overlapping the battery and so too then does their respective portions of the alleged cavity.

CX-0527C. Thus, Oura Gen 3 does not satisfy this claim.

(b) Oura Gen. 4

As discussed above, the Oura Gen. 4 does not include a "cavity formed between the internal housing component and the external housing component," much less "a first portion of the cavity," or a "second portion of the cavity." Moreover, even as alleged, Dr. Sarrafzadeh does not establish how any first portion of the cavity is non-overlapping with the second portion of the cavity.

Indeed, the alleged second portion from Dr. Sarrafzadeh's contentions overlaps the alleged first portion of the cavity as shown below.

[redacted]

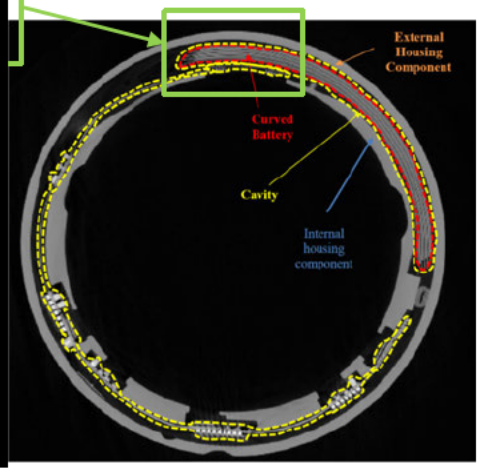

CX-0611. Thus, the Oura Ring Gen. 4 does not satisfy dependent claim 2.

C. Dependent Claim 12: "the finger-worn wearable ring device of claim 1, wherein the battery comprises a curved battery, wherein an arc of the curved battery approximates a corresponding arc of the external housing component."

Claim 12 recites the finger-worn wearable ring device of claim 1, wherein the battery comprises a curved battery, wherein an arc of the curved battery approximates a corresponding arc of the external housing component.

The Oura Gen. 3 and Gen 4 come in a variety of different sizes, and each of these alleged external housing components are defined by different arcs. Complainants do not differentiate between the different sizes of the Oura Gen. 3 and Gen. 4 and thus do not show that every Oura Gen. 3 and Gen. 4 has "an arc of a curved battery [that] approximates a corresponding arc of the external housing component."

[redacted]

D. Dependent Claims 13 and 14: "The finger-worn wearable ring device of claim 1, wherein the one or more sensors comprise a first light-emitting component configured to emit light associated with a first wavelength, and a second light-emitting component configured to emit light associated with a second wavelength different from the first wavelength," and "The finger-worn wearable ring device of claim 13, wherein the first wavelength is associated with visible light, and wherein the second wavelength is associated with infrared light."

Claims 13 and 14 are not infringed for at least the reasons set forth above with respect to the claims from which these claims depend.

E. Dependent Claims 17 and 18: "The finger-worn wearable ring device of claim 1, wherein the external housing component and the internal housing component define the cavity configured to at least partially surround the battery, and the printed circuit board, wherein one of the external housing component or the internal housing component comprises: a first side wall and a second side wall that extend between the internal housing component and the external housing component, wherein the cavity is defined at least in part by the outer circumferential surface, the inner circumferential surface, the first side wall, and the second side wall," and "the finger-worn wearable ring device of claim 17, wherein the first side wall, the second side wall, or both, are substantially perpendicular to the inner circumferential surface, the outer circumferential surface, or both."

(a) Oura Ring Gen. 3

Claim 17 (and by dependency claim 18) recites, "wherein one of the external housing component or the internal housing component comprises: a first side wall and a second side wall that extend between the internal housing component and the external housing component, wherein the cavity is defined at least in part by the outer circumferential surface, the inner circumferential surface, the first side wall, and the second side wall." However, even if you accept Dr. Sarrafzadeh's strained and incorrect conclusions in the image below, none of the alleged internal housing component, external housing component, inner/outer circumferential surfaces, or side walls define the alleged cavity.

[redacted]

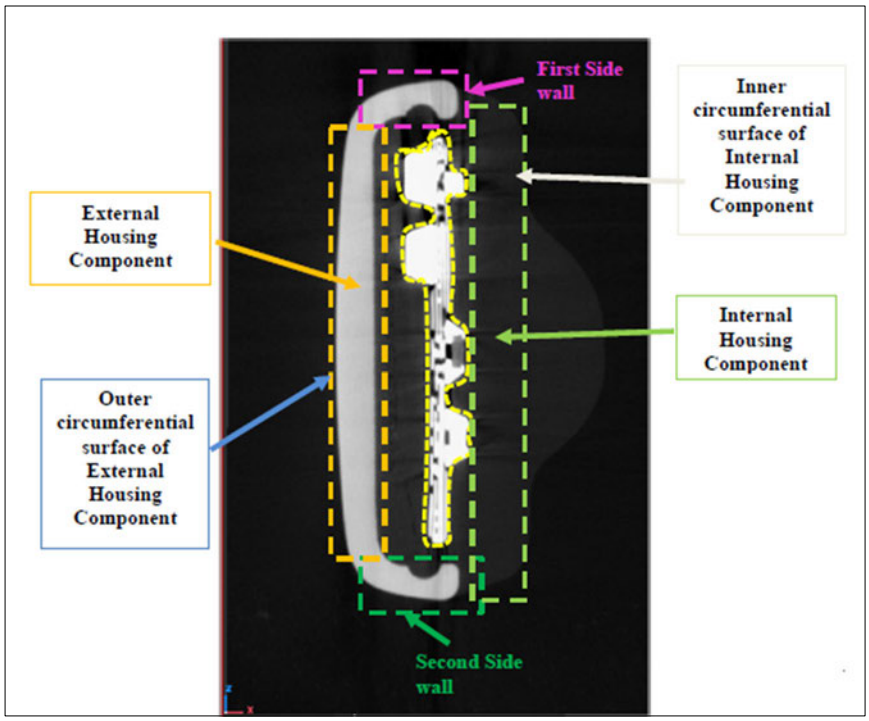

RX-0402C ¶ 292 *citing* CX-0048 (Dr. Sarrafzadeh's annotations). To the extent that the alleged cavity shown above (which is not even a cavity) is defined by anything, it is by the components occupying it and the potting material around it. To say that these other structures or portions of structures somehow define the alleged cavity does not make sense.

(b) Oura Ring Gen. 4

There are no side walls in the Oura Gen. 4 defining any alleged cavity in that product. Dr. Sarrafzadeh alleges that the alleged external housing component of the Oura Ring Gen. includes the first side wall and second side wall. However, as can be seen even under Dr. Sarrafzadeh's strained and incorrect interpretations, those alleged side walls do not define any alleged cavity. Instead, they are separated from the component by resin as shown in the annotated figure from Dr. Sarrafzadeh below:

[redacted]

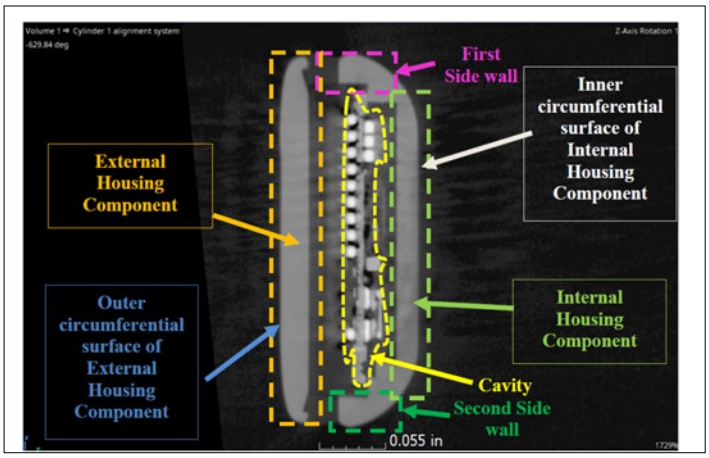

RX-0402C ¶ 284; CX-0076C. As can plainly be seen, the alleged cavity is defined by the components and the potting, not any internal or external housing components or components thereof.

VII. THE ASSERTED CLAIMS OF THE '178 PATENT ARE INVALID

A. The '178 Patent Is Invalid under the *Ohio Willow* Doctrine.

The '178 Patent, along with U.S. Patent Nos. 11,868,179 (the "'179 Patent"); 11,599,147 (the "'147 Patent"); 10,893,833 (the "'833 Patent"); 11,874,702 (the "'702 Patent"); 11,874,701 (the "'701 Patent"); 10,842,429 (the "'429 Patent"); 10,281,953 (the "'953 Patent"); 10,139,859 (the "'859 Patent"); and 9,582,034 (the "'034 Patent") were recently challenged by Samsung Electronics Co., Ltd. and Samsung Electronics America, Inc. (collectively, "Samsung") in a series of eleven PGR and IPR filings.[11]

While Oura opposed institution on the merits for some of the filings, in many others it ***disclaimed all challenged claims*** instead of contesting the merits, including for PGR2024-00031

[11] PGR2024-00039; PGR2024-00038; IPR2024-01080; IPR2024-01079; IPR2024-01078; IPR2024-01077; PGR2024-00031; PGR2024-00030; IPR2024-00930; IPR2024-00929; IPR2024-00928.

(’179 Patent); IPR2024-00930 (’147 Patent); and IPR2024-00929 (’833 Patent).[12] As soon as Oura filed its disclaimers, they became immediate and irrevocable. *See Vectra Fitness, Inc. v. TNWK Corp.*, 162 F.3d 1379, 1383, 1384 (Fed. Cir. 1998) (explaining that disclaimed claims are treated as if they “never existed,” and that disclaimers operate with “finality and certainty”). Doing so was akin to granting Samsung the relief it sought without forcing the PTAB to go through effort of invalidating the challenged claims with a final written decision.

“Collateral estoppel protects a party from having to litigate issues that have been fully and fairly tried in a previous action and adversely resolved against a party-opponent.” *Ohio Willow Wood Co. v. Alps South, LLC*, 735 F.3d 1333, 1342 (Fed. Cir. 2013). Under the Federal Circuit’s *Ohio Willow* precedent, collateral estoppel for patent invalidity does not extend just to “identical” patent claims. *Id.* Instead, “[i]f the differences between the unadjudicated patent claims and adjudicated patent claims do not materially alter the question of invalidity, collateral estoppel applies.” *Id.* (citation omitted).

Here, the *Ohio Willow* doctrine applies to the ‘178 Patent given Oura’s self-invalidation of the ’179, ’147, and ’833 Patents. ***First***, Samsung challenged validity via an adversarial process, and Oura’s disclaimers adversely resolved validity against it. Indeed, the only difference between Oura’s pre-institution disclaimers and a final written decision of invalidity is that Oura forfeited the ability to contest invalidity on appeal. Collateral estoppel must therefore apply under settled Federal Circuit law.

Second, any differences—as few as they are—between the claims of the ‘178 Patent and the adjudicated patent claims do not materially alter the question of invalidity. Like the ‘178 Patent,

---

[12] *See* RX-0433; RX-0434; RX-0435; RX-0436; RX-0437; RX-0438; RX-0439; RX-0440; RX-0441; RX-0442; RX-0443; RX-0444.

the self-invalidated ’179, ’147, and ’833 Patents each recite a ring containing electronic components like a battery, a PCB, and sensors. In particular, the ’178 and ’179 Patents are both continuations of the ’147 Patent, and all three patents share the substantially similar specification and common inventors. Further, Respondents assert the same art against the ‘178 Patent that led Oura to self-invalidate the ’179, ’147, and ’833 Patents. Respondents’ expert, Ramon Alarcon, concurs in his Second Supplemental Report.

1. The Validity of U.S. Patent Nos. 11,868,179; 11,599,147; and 10,893,833 Was Finally Adjudicated via the Samsung Proceedings

In determining whether collateral estoppel applies, the Commission generally addresses the following four factors: “(1) the issue is identical to one decided in the first action; (2) the issue was actually litigated in the first action; (3) resolution of the issue was essential to a final judgment in the first action; and (4) the plaintiff had a full and fair opportunity to litigate the issue in the first action.” *E.g.*, *In the Matter of Certain Memory Modules & Components Thereof*, USITC Inv. No. 337-TA-1089 (Feb. 1, 2022) (cleaned up). While these factors guide “the general procedural question of whether issue preclusion applies,” it is Federal Circuit precedent that applies “to questions involving substantive issues of patent law, issues of issue preclusion that implicate substantive patent law issues, [and] issues of issue preclusion that implicate the scope of [the Federal Circuit’s] previous decisions.” *Ohio Willow*, 735 F.3d at 1342; *see Soverain Software LLC v. Victoria’s Secret Direct Brand Mgmt., LLC*, 778 F.3d 1311, 1314 (Fed. Cir. 2015).

The issue of validity is identical. The question of validity for the ‘178 Patent is identical to the question of validity for the ’179, ’147, and ’833 Patents. Indeed, the claims of the ‘178 Patent raise no materially different questions of validity, and the prior art that prompted Oura to self-invalidate its own patents is the same art Respondents assert here. *See infra*.

Validity was actually litigated. Samsung raised robust validity challenges giving Oura three options: it could file a preliminary response arguing against institution; it could do nothing and hope the PTAB would not institute on its own; or it could roll over and disclaim the challenged claims. Oura chose the third option, self-invalidating its claims and granting Samsung the relief it sought without the effort and expense of trial. Like a final judgment of invalidity issued by a district court or the PTAB, Oura's disclaimers immediately and with finality extinguished the challenged claims. The only difference: Oura waived any ability to challenge this determination on appeal.

Extinguishing the challenged claims was the sine qua non of Oura's disclaimer. Samsung sought a determination of invalidity, and by operation of Oura's disclaimers, the challenged claims are treated as if they "never existed." *Vectra*, 162 F.3d at 1383. Indeed, Oura urged the PTAB not to institute because its disclaimers fully resolved the underlying question of validity.

Oura had a full and fair opportunity to litigate. Oura had a full and fair opportunity to contest Samsung's invalidity challenges—it just chose not to.

For these reasons, collateral estoppel must apply.

2. <u>The Question of Validity for '178 Patent Is the Same as for the '179, '147, and '833 Patents.</u>

"It is well established that patent claims need not be identical;" in fact, the doctrine may apply "even if the patent claims use slightly different language to describe substantially the same invention." *Google LLC v. Hammond Dev. Int'l, Inc.*, 54 F.4th 1377, 1381 (Fed. Cir. 2022) (cleaned up). Indeed, courts apply the doctrine in instances where the primary differences between the unadjudicated claim and adjudicated claim merely involved non-inventive claim limitations or known elements. *See, e.g.*, *Soverain Software LLC v. Victoria's Secret Direct Brand Mgmt., LLC*, 778 F.3d 1311, 1319 (Fed. Cir. 2015) (finding that the added limitation in the unadjudicated claim

did not "materially alter" the question of validity because it involved "a routine incorporation of Internet technology into existing processes"). Further, the patentee bears the burden of "explain[ing] how" any "additional limitation would change an invalidity analysis[.]" *Id.*

Oura cannot carry its burden here. The claims of the '178 Patent and the self-invalidated '179, '147, and '833 Patents each recite the same basic ring structure:

- Each patent claims a ring wearable device. *See, e.g.*, RX-0001 ('178 Patent) at cl. 1; RX-0455 ('179 Patent) at cls. 1, 11; RX-0454 ('147 Patent) at cls. 1, 8; RX-0456 at cl. 1, 12 ('833 Patent).
- The claimed ring structure in each of these patents includes a ring housing comprising inner and outer surfaces of the recited housing components. *See, e.g.*, RX-0001 ('178 Patent) at cl. 1; RX-0455 ('179 Patent) at cl. 1; RX-0454 ('147 Patent) at cl. 1; RX-0456 ('833 Patent) at cl. 1.
- Each patent also claims a cavity formed in the housing that comprises electronic components, such as a battery and/or printed circuit board. *See, e.g.*, RX-0001 ('178 Patent) at cl. 1; RX-0455 ('179 Patent) at cls. 1, 13; RX-0454 ('147 Patent) at cls. 1, 4, 6, 7; RX-0456 ('833 Patent) at cls. 1, 9.
- Each patent further claims sensors disposed within the housing, including those comprising light-emitting components, that are configured to acquire data from the user of the ring through the housing. *See, e.g.*, RX-0001 ('178 Patent) at cls. 1, 13; RX-0455 ('179 Patent) at cls. 1-2; RX-0454 ('147 Patent) at cls. 1, 6, 21; RX-0456 ('833 Patent) at cls. 1, 9-11.

See generally Second Supplemental Alarcon Report.

Accordingly, the asserted claims of the ’178 Patent and the disclaimed claims in each of the ’179, ’147, and ’833 Patents are identical in all ways relevant to validity. Any slight differences in wording between these claims is immaterial, and none can create any new issue of invalidity. Further, as much as Oura argues the ’178 Patent has a limitation not recited in the disclaimed patents, any such limitation must be non-inventive given the striking overlap in claim scope. This too cannot materially alter the question of invalidity, particularly given the prior art asserted against all four patents.

Indeed, Samsung asserted the ***same art*** as Respondents assert against the ’178 Patent. For example, with respect to the ’179 Patent, Samsung requested cancellation of Claims 1-16 of the ’179 Patent under AIA 35 U.S.C. § 103 under six separate grounds, wherein each ground relied on one or more of the following prior art references: U.S. Patent Publication No. 2012/0016245 to Niwa (“Niwa”), U.S. Patent No. 10,303,867 to Schröder (“Schröder”), and/or U.S. Patent No. 8,954,135 to Yuen (“Yuen”). With respect to the ’147 Patent, Samsung requested cancellation of Claims 1-22 as obvious, also under six separate grounds, wherein each ground relied on one or more of the following prior art references: Schröder, Yuen, and/or U.S. Pat. Pub. No. 2014/0244009 to Mestas (“Mestas”). And for the ’833 Patent, Samsung requested cancellation of Claims 1-12 as obvious under four separate grounds, each of which involved only Schröder and/or Yuen.

As set forth in Respondents’ Initial Burden Contentions, Respondents likewise asserted here that each of these same prior art references rendered the asserted claims of the ’178 Patent either anticipated or obvious. Respondents continue to assert at least Niwa, Schröder, and Yuen against the remaining claims of the ’178 Patent at-issue here. *See, e.g.*, *infra*, §§ VII.C.4, VII.C.6, VII.C.9, VII.G-H.

Thus, under the *Ohio Willow* doctrine, the '178 Patent should be deemed invalid because it involves the same invalidity issue as the now-disclaimed '179, '147, and '833 Patents.

3. Oura's Decision to Self-Invalidate Its Own Patent Portfolio Raises Additional Questions.

The '179 Patent was also originally included in this Investigation, and like the '178 Patent, Oura obtained it via expedited, track one prosecution. Disclaiming any patent is strange enough, but disclaiming a track one patent that has been asserted against competitors has no precedent.

The timing here is also suspect. Oura filed its disclaimers on Halloween after its validity expert was deposed in this Investigation. It also made no mention of its disclaimers to either Respondent despite the fact that Oura is ***still asserting*** now-disclaimed patents in the co-pending district court cases.

B. '178 Patent Background

1. Overview of the '178 Patent

The '178 Patent is titled "Wearable computing device," and "provide[s] a wearable computing device (WCD) in the shape of a ring," that purports to be able to "be worn for extended periods of and can take many measurements and perform various functions because of its form factor and position on the finger of a user." JX-0001 at 1:50-55. The patent describes that "[a]lthough the WCD of the present disclosure is depicted as a ring that can be worn on the finger of a user, other shapes, designs, and form factors can be utilized for the WCD," and "the WCD can be in the form of a wrist band, bracelet, necklace, earring, or any other type of wearable accessory. In this regard, references to the finger of a user in the present application can be considered to apply to other portions of a human body depending on the form of the WCD, such as wrist, neck, ear, etc." JX-0001 at 8:65-9:7.

[redacted]

The '178 Patent discloses many wearable computing device embodiments throughout the specification. For example, the specification provides a WCD 410 embodiment with a U-shaped ring housing 412, a battery 480, and a flexible circuit 415 which are configured to fit inside the housing 412 shown in Fig. 4 below. *Id.* at 15:64-67;16:22-24. The U-shape housing 412 "allows for the flexible PCB 415 to be inserted into the edge of the WCD 410." *Id.*

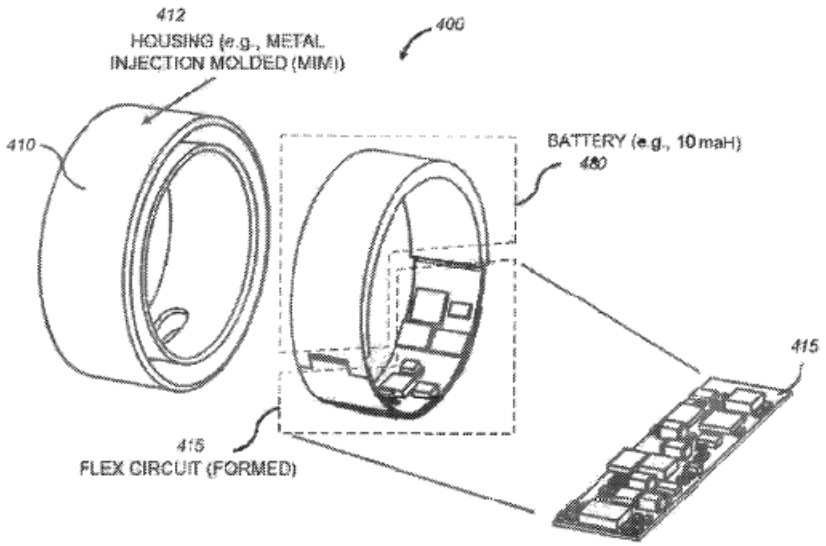

FIG. 4

JX-0001 at Fig. 4

In particular, specification provides four enumerated embodiments:

I. Internal Housing / External Potting – JX-0001 at 16:43-18:62
II. External Housing / Internal Potting – *Id.* at 18:63-20:26
III. Inner/Outer Bands – *Id.* at 20:27-49
IV. Inner/Outer Bands with U Shaped Window – *Id.* at 20:50-21:10.

As explained above in the context of non-infringement, the patent describes certain single-enclosure embodiments (e.g., embodiments I and II), and certain double-enclosure embodiments (e.g., embodiments III and IV). '178 Patent. For example, in the context of describing Embodiment III (one of the double-embodiment enclosures), the specification discloses that

[redacted]

"[o]nce the housings 1512-1514 are assembled and the PCB 1540 and components 1550 are assembled within space defined between the housings 1512-[14], potting layers 1502 and 1504 can be applied to seal the WCD at both sides thereof to ensure a secure seal." *Id.* at 20:45-49.

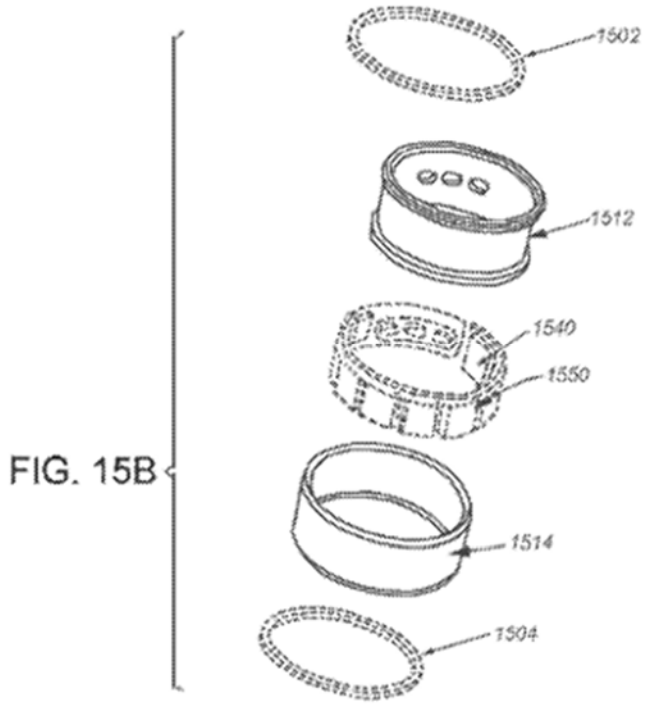

JX-0001 at Fig. 15B.

The specification further describes Embodiment III as having internal and external housing components 1512 and 1514; a cavity or hollow space formed between the housing components; and a PCB and other components disposed within the hollow space formed between the housing components 1512 and 1514. JX-0001 at 20:44-48. Potting material can then be applied to the WCD on the sides to seal the WCD. JX-0001 at 20:48-49.

Notably, there is nothing in the specification disclosing that an arbitrary portion of potting material can be considered a "housing component." As described above, the specification enumerates two single-enclosure embodiments with internal or external potting: Embodiments "I.

Internal Housing and External Potting" and "II. External Housing and Internal Potting." *Id.* at 16:43-18:62 and *Id.* at 18:63-20:26. The specification also describes a separate embodiment with internal/external potting material illustrated in Figs. 14A and 14E. *Id.* at 19:25-20:26. For these three embodiments, the specification never depicts or describes a "crust" or "layer" of potting material. For example, in Embodiment II (described in Fig. 13), the specification provides no demarcation where the internal potting 1314 ends because the potting material fills the entirety of the space 1320. Thus, when the specification describes internal or external potting material, it is referring to the entirety of the material – not a portion or surface of it. Neither Oura's invalidity expert nor its infringement expert dispute this fact. *See* RX-0402 at ¶ 36 (depicting the entirety of the potting material completely surrounding the internal components in purple and alleging that the purple potting is an "internal housing component"); RX-0411C at ¶ 47 (same); RX-0403.8 at ¶ 22 (same).

The specification does, however, describe internal and external housing components connected by a "floor" forming an integral finger-worn ring device. JX-0001 at 20:66-21:1. For example, Fig. 4 shows an internal structure that encloses space, an external structure that encloses space, and a side floor connecting those two structures. *Id.* at Fig. 4. *See also id.* at Fig. 6 (same); Fig. 16A (same); 20:53 ("The WCD comprises a housing 1610 with an integral inner wall and outer wall 1612 and 1614."); 20:63-5 ("the inner and outer walls 1612,1614 can receive a PCB 1640, battery, components, etc."); 20:66-21:1 ("Fig. 16B is a cross section of Fig. 16A along line B-B. As shown, the inner and outer walls 1612,1614 are directly connected by a floor 1618") (emphasis added).

2. Level of Skill in the Art

The '178 Patent has an effective filing date of November 29, 2013. As the ALJ determined in the Claim Construction Order, a POSA, as of November 29, 2013 would have (1) at least three

years of experience with research or development of health or medical devices or consumer products; and (2) a related degree (e.g., at least a bachelor's degree) in mechanical, industrial, or electrical engineering, or a related field. JX-0014 at 4-5.

C. Overview of the Prior Art References

1. Asada

U.S. Patent No. 5,964,701 ("Asada") titled "Patient Monitoring Finger Ring Sensor", was filed on October 24, 1997 and issued on October 12, 1999. CX-1134. Asada's issue date predates the '178 Patent's earliest possible priority date. Therefore, Asada is prior art to the '178 Patent under at least 35 U.S.C. §§ 102(a)(1) and 102(a)(2). Asada is listed in the references cited on the face of the '178 Patent, but it was not cited by the examiner during prosecution. Oura admits that Asada is prior art to the '178 Patent. RFA 1 of RX-0326.

Asada relates to "a finger ring, equipped with miniaturized sensors and a wireless transmitter." Asada at 1:53-56. The reference discloses "one or more photo diodes 2 and one or more light-emitting diodes (LEDs) 4 are imbedded in a ring 10 facing each other inside the ring. The LEDs may emit light in the visible or infrared, and may be particularly chosen to emit light at one or more specified wavelengths, such as the isobestic wavelength discussed below", as shown in Figure 1. Asada at 3:28-47; Figure 1.

[redacted]

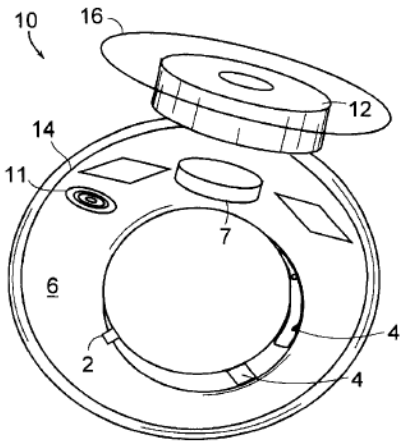

FIG. 1

Asada discloses a "sensor detecting the beat produces a pulse train of on-off signals and the pulse-train is sent to a transmitter (not shown) contained within an electronics module 6 which, in a preferred embodiment, is realized as a flexible printed circuit board." *Id*. Asada discloses sensors coupled to a printed circuit board, where "The pulse of the patient may be detected as a periodic change in the sensor output." Asada at 3:28-37. The sensors acquire data through the internal housing component.

Asada discloses a battery positioned on the top of the ring. Asada discloses a digital filter that "adaptively eliminates interference due to the motion artifact by removing, by means of summer 32, the motion signals from the sensor signals." Asada at 4:8-15. Asada discloses a transmitter section, a warning feature for elderly care monitoring, and radio location allowing location of the wearer. Asada at 5:31-56.

Asada's abstract states:

> A monitoring system for monitoring the health status of a patient and transmitting to a remote receiver a signal, based on measured physiological parameters. A sensor is incorporated in a finger ring or other article of apparel so as to monitor skin temperature, blood flow, blood constituent concentration, or pulse rate of the patient. The data are encoded for wireless transmission by mapping a numerical value associated with each datum to a pulse emitted after a delay of a specified duration following a fiducial time. Multiple ring bands and sensor elements may be

> employed for deriving three-dimensional dynamic characteristics of arteries and tissue of the finger.

Asada at Abstract. Asada further discloses:

> A simple finger ring sensor with a wireless transmitter has been designed to demonstrate the concept. As shown in FIG. 1, one or more photo diodes 2 and one or more light-emitting diodes (LEDs) 4 are imbedded in a ring 10 facing each other inside the ring. The LEDs may emit light in the visible or infrared, and may be particularly chosen to emit light at one or more specified wavelengths, such as the isobestic wavelength discussed below. The pulse of the patient may be detected as a periodic change in the sensor output. This ring may be placed on one of the fingers. In a preferred embodiment, ring 10 is placed on the middle finger, which is not only convenient for wearing the ring but also suitable for counting pulse. The outer skin of the middle finger is thin, particularly at the sides of the finger, and a digital artery runs right beneath the thin skin. With an appropriate threshold, the sensor detecting the beat produces a pulse train of on-off signals and the pulse-train is sent to a transmitter (not shown) contained within an electronics module 6 which, in a preferred embodiment, is realized as a flexible printed circuit board.

Asada at 3:28-47. Asada further discloses:

> Referring again to FIG. 1, a transmitter 11 of the finger ring sensor transmits a wave which propagates without wires, such as a radio wave, an optical or infrared wave, or an ultrasound wave transmitted through the air. A radio transmitter is considered by way of example. In a preferred embodiment, radio transmitter 11 is a narrow-band, short-range, compact transmitter used for radio-controlled model cars, and transmission is via antenna coils 14 and 16, which, by virtue of their orthogonal polarizations, provide a radio signal which, in the far field, may be detected without sensitivity to a particular polarization. Various modulation schemes known to persons skilled in the art may be employed to encode information on the transmitted signal. These include, for example, amplitude, frequency, or pulse-code modulation. Power is provided by battery 12.

Asada at 4:8-16. Asada further discloses:

> Referring now to FIG. 4, in an alternate embodiment of the invention, spatially distributed optical sensors are employed in the ring configuration to monitor a patient's health conditions. Photo diodes 42 and LEDs 44 of appropriate wavelengths may be imbedded not only along the ring facing inwards, but also distributed in the longitudinal direction of the finger or other body member with a double-band configuration 40. The signal processing electronics, transmitter, antenna, battery, and MEMs accelerometer are contained within sensor module 48 in a manner described with reference to FIG. 1. Lights to be transmitted and reflected through the tissue of the body member may be collected three-dimensionally and integrated to estimate the patient's arterial blood pressure and blood flow, arterial blood volume, hematocrit, and oxygen saturation. Hematocrit

> refers to the volume percentage of erythrocytes in the patients blood. Similarly, other blood concentrations may be derived by suitable choice of optical wavelengths.

Asada at 4:48-65. Different types of ring housings were well known in the art as shown by Asada, which, as noted above, was filed in 1997 and issued in 1999.

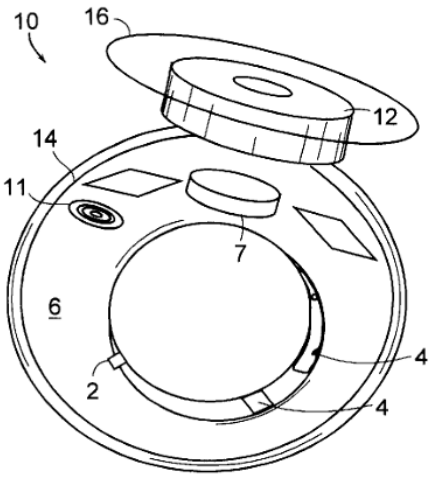

FIG. 1

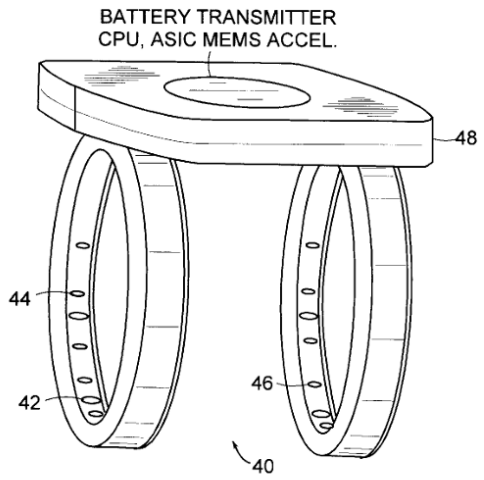

FIG. 4

Asada at Figs. 1, 4.

2. Webster

U.S. 8,715,204 to Webster was filed on July 14, 2011 and published as US 2012/0016258 on January 19, 2012. CX-1135. Accordingly, Webster is prior art to the ’178 patent under 102(a)(1) and 102(a)(2). Oura admits that Webster is prior art to the ’178 Patent. RFA 33 of RX-0326.

Webster is directed to a wearable ring sensor with a curved battery that transmits biometric information from the user back to a user device. RX-0011 at 1:40-61, 5:8-12, Figs. 1-3. Specifically, Webster discloses “A battery 212 together with voltage regulation circuitry can supply the proper voltage to each of the circuit elements. The battery 212 can, in one embodiment, be a thin film lithium ion or zinc-manganese dioxide chemistry battery that can be bent or curved.” RX-0011 at 5:8-12. The battery in Webster is positioned in a different portion of the device than the

[redacted]

printed circuit board. RX-0011 at 5:8-12. Webster was not considered by the examiner during prosecution of the '178 Patent and is not listed in the references cited on the face of the '178 Patent. Figures 2A, 2B, and 5 of Webster are shown below:

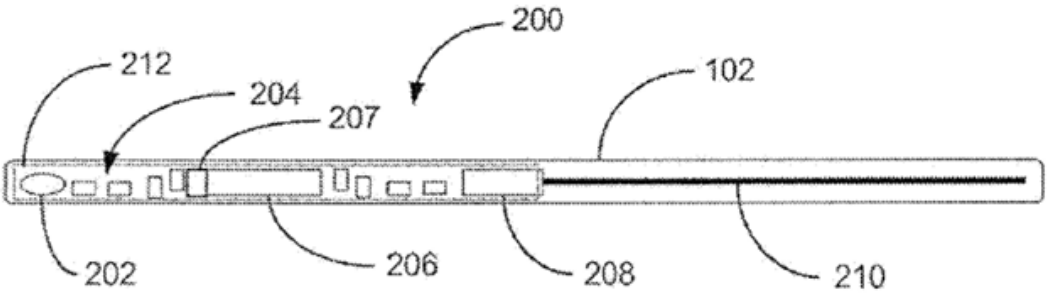

FIG. 2A

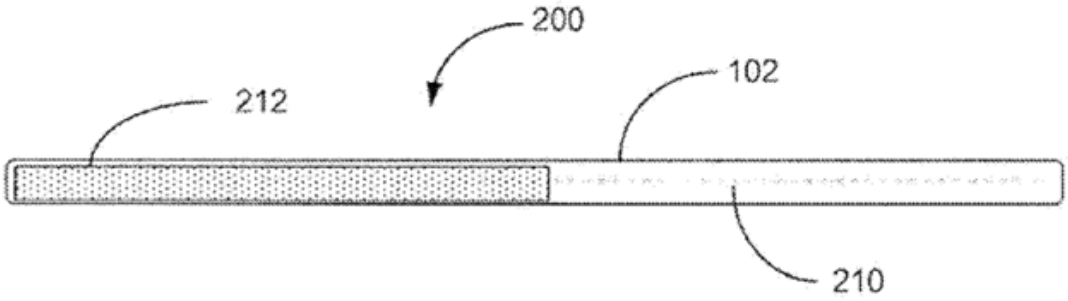

FIG. 2B

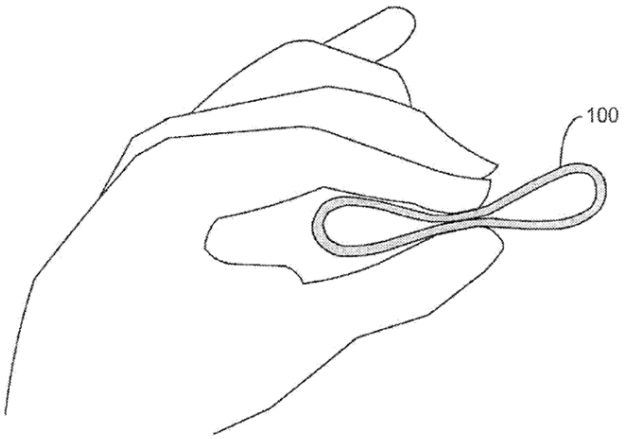

FIG. 5

RX-0011 at Figs. 2A, 2B, 5.

Although Webster is implanted into a user, it is still a ring device that acquires data from a user while contacting the user. And even though Webster discloses that the ring can be anywhere from 1 to 3 inches, that is still along a similar order of magnitude of a wearable finger ring device. RX-0011 at 7:6-8. A 1 inch diameter is 25.4 mm, and the '178 Patent discloses a maximum diameter of 24 mm for a wearable ring device. '178 Patent at 17:4-7. And lastly, a POSA would understand that, due to the disclosure of Webster's flexible battery, smaller batteries like the one used in Webster were available. Webster is additional evidence that flexible or curved batteries were available—the POSA would just need to select one for the appropriate use. Rosing at ¶ 467.

3. Henderson

US 2013/0226486 to Henderson was filed on January 18, 2013, published on August 29, 2013. CX-1139. Therefore, Henderson is prior art to the '178 patent under at least 35 U.S.C. §§ 102(a)(1) and 102(a)(2). Henderson was filed by Nike Inc. Oura admits that Henderson is prior art to the '178 Patent. RFA 53 of RX-0326.

Henderson is directed to batteries and power management in a ring-shaped activity monitoring device with a curved battery that measures various biometric data. Henderson discloses that its "batteries 142 have a curvilinear or curved configuration" that "are generally flush with the inner surface 32 of the spine member 22," which is curved. RX-0012 at [0077]. Henderson also discloses that "the device may include one or more functional batteries of a curved profile," and discloses how to make curved batteries. RX-0012 at [0125]. Henderson is listed in the references cited on the face of the '178 patent, but it was not cited by the examiner during prosecution.

Henderson discloses curved batteries, as noted above and as shown below in Figure 6. RX-0012 at [0125].

[redacted]

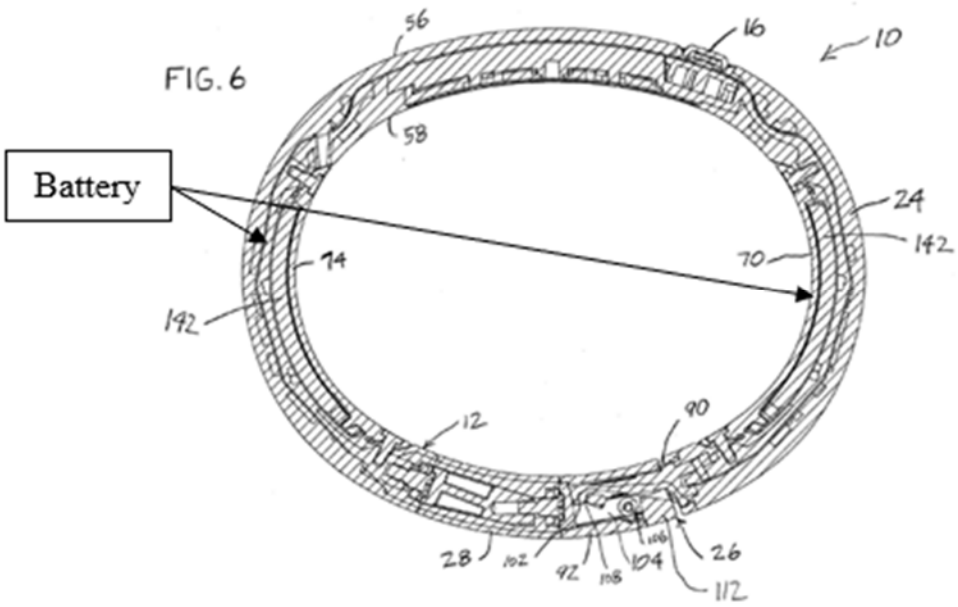

RX-0012 at Fig. 6. Oura also admits that Henderson discloses a curved battery. RFA 54 of RX-0326.

A POSA would have understood that the Nike+ FuelBand is the real life embodiment of Henderson, which was filed by Nike. The Nike+ FuelBand was a product that had curved batteries and was released prior to 2013, as evidenced by this 2012 YouTube teardown. RX-0032.

RX-0032 at 3:18, 3:56.

Notably, the batteries in the fuel band are curved and not in flat sections of a wearable-wrist device—they were placed in the curved portions of the Nike+ FuelBand's housing. And same

[redacted]

with the batteries in Henderson (as shown above in Figure 6 of Henderson). Both the Nike+ FuelBand and Henderson show the POSA's knowledge of curved batteries.

4. Yuen

U.S. Patent No. 8,954,135 ("Yuen") titled "Portable Biometric Monitoring Devices and Methods of Operating Same" was issued on February 10, 2015. CX-1136. Yuen was filed June 24, 2013. Yuen was effectively filed before the effective filing date of the '178 Patent (November 29, 2013). Therefore, Yuen is prior art to the '178 Patent under at least 35 U.S.C. § 102(a)(2). Yuen is listed in the references cited on the face of the '178 patent, but it was not cited by the examiner during prosecution. Oura admits that Yuen is prior art to the '178 Patent. RFA 77 of RX-0326.

Yuen discloses a "portable biometric monitoring device including a housing having a physical size and shape that is adapted to couple to the user's body" that includes a physiological sensor, disposed in the housing, to generate biometric data that includes LEDs and photo detectors. Yuen at Abstract, 2:29-45, 2:64-3:8, Fig. 5-7.

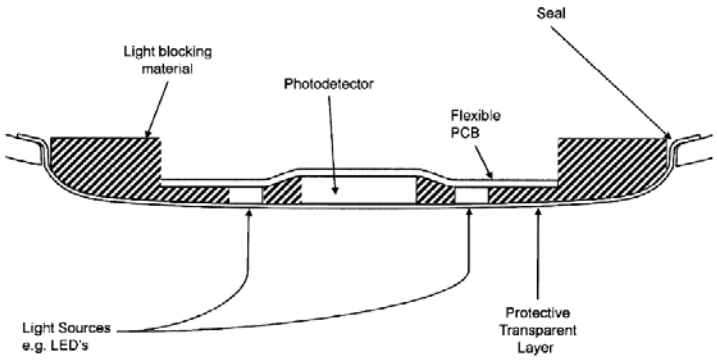

FIG. 5

In the device disclosed in Yuen, the processors can be configured to selectively adjust one or more operational parameters of the one or more sensors based at least in part on the data acquired by the one or more sensors. In one embodiment, "a user's heart rate measurement may be triggered by criteria determined by one or more sensors (or processing circuitry connected to them). For

[redacted]

instance, when data from the motion sensor(s) indicates a period of stillness or little motion, the biometric monitoring device may trigger, acquire and/or obtain a heart rate measurement or data." Yuen at Figures 15, 24, and 25. In another embodiment, the biometric monitoring device may employ "heart rate variability" as an indicator of cardiac biometrics. Yuen at 7:19-47.

5. Babashan

U.S. Patent App. Pub. No. 2009/0054751 ("Babashan") titled "Touchless Sensor For Physiological Monitor Device" was published on February 26, 2009. CX-1079. Therefore, Babashan is prior art to the '178 Patent under at least 35 U.S.C. § 102(a)(2). Babashan is not listed in the references cited on the face of the '178 patent and was not cited or considered by the examiner during prosecution. Oura admits that Babashan is prior art to the '178 Patent. RFA 543 of RX-0326.

Babashan discloses a finger worn ring device. Specifically, it discloses a wearable monitoring device where a "casing" "may house the display units 601, the user input device 622 (not shown), the sensors assembly 603, the microcontroller 20 (as illustrated in FIG. 1) and the power generating device 627. The casing 621 of the heart rate monitor 600 may have many different designs. It may be designed to be worn on different body parts, such as wrists, fingers, ears, neck, chest or ankles" as seen in Figure 6H. RX-0014 at [0086].

Fig. 6H

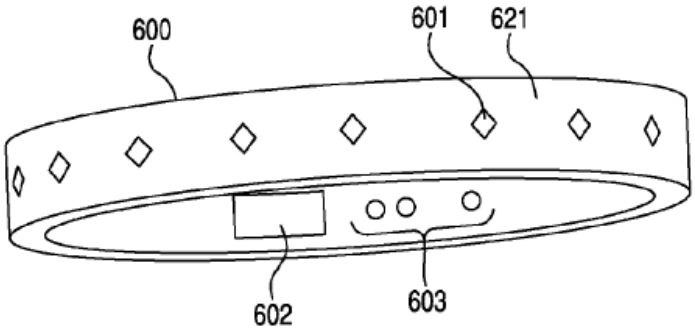

[redacted]

6. Niwa

U.S. Patent App. Pub. No. 2012/0016245 to Niwa ("Niwa") titled "Plethysmogram sensor," was published on January 19, 2012. RX-0019. Therefore Niwa is prior art to the '178 Patent under at least 35 U.S.C. § 102(a)(2). Niwa was not listed in the references cited on the face of the '178 Patent, and it was not cited or considered by the examiner during prosecution. Oura admits that Niwa is prior art to the '178 Patent. RFA 255 of RX-0326.

Niwa discloses a pulse sensor 1 worn a user's finger. RX-0015 at ¶ [0206]. Niwa's plethysmogram sensor provides a "finger ring type housing 40." RX-0015 at ¶ [0191]. Niwa discloses the following:

> FIG. 1 is a schematic diagram to explain a principle of the plethysmogram measurement in accordance with the implementation example 1 of the invention. FIG. 2 is a wave form diagram illustrating a situation where the amount of light attenuation within a living body (i.e., light absorption level) changes according to the time lapse illustrated in the plethysmogram measurement in FIG. 1.
> For example, with respect to a measurement by means of plethysmography, as illustrated in FIG. 1, the light is emitted from the light emitting portion (e.g., LED, etc) to the fingertip (i.e., other portions work as well as long as the blood vessel is running, for example, the third joint of the finger illustrated in FIG. 21) pressed to the measurement window. Then an intensity of the light which penetrates through the living tissue and go out of the living tissue is detected at the light receiving portion (e.g., a photo diode or a photo transistor).

RX-0015 at [0116-1117].

[redacted]

FIG.1

FIG.2

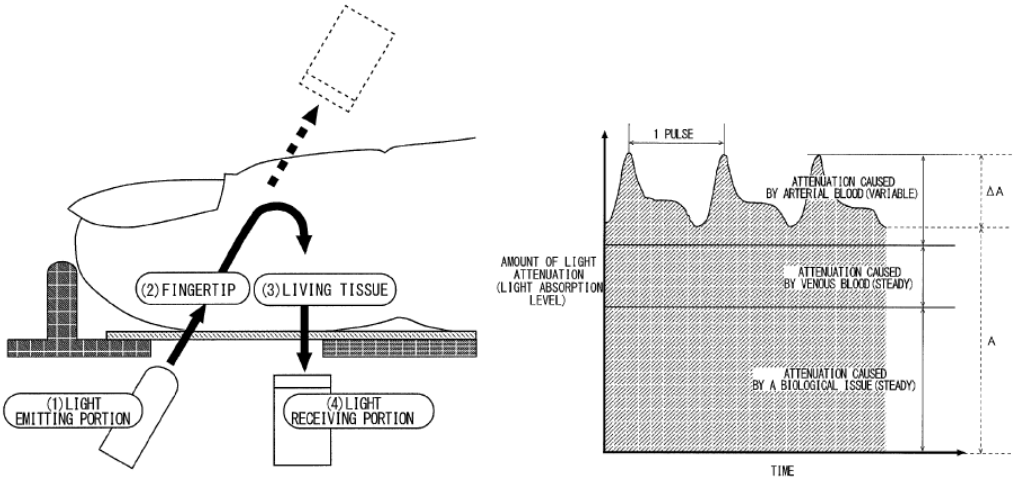

RX-0015 at Figs. 1-2.

Niwa provides a layout of a light emitting and light receiving portion in Figure 3 and states:

> FIG. 3 is a schematic diagram illustrating a construction example of the plethysmogram sensor in accordance with the invention. With respect to the plethysmogram sensor in accordance with this construction example, both the light emitting portion and the light receiving portion are not provided at the opposite side against the fingertip each other (i.e., a so-called penetration type, in reference to a broken line arrow in FIG. 1). The plethysmogram sensor has a construction both the light emitting portion and the light receiving portion are provided at same side against the fingertip (i.e., a so-called reflection type, in reference to a full line arrow in FIG. 1). Furthermore, as illustrated in FIG. 3, the plethysmogram sensor includes a single light receiving portion PD (i.e., a photo diode or a photo transistor) and eight light emitting portions LED1 to LED8 (i.e., a light emitting diode) equally spaced from one another and placed on a circumference with a central focus on the light receiving portion PD. In addition, in the following explanation, each output intensity of the light emitting portions LED1 to LED8 is denoted as I1 to I8, and each output wave length of the light emitting portions LED1 to LED8 is denoted as λ1 to λ8. In addition, as not illustrated explicitly in FIG. 3, the plethysmogram sensor in accordance with the invention includes a CPU [Central Processing Unit] to perform the light emitting control of the light emitting portions LED1 to LED8, the light receiving control of the light receiving element PD, and various kinds of signal processing for the measured value acquired by the light receiving element PD. Furthermore, the number of the light emitting portions is simply an example, a number other than eight can be adopted.

RX-0015 at Fig. [0120].

The finger ring type housing 40 houses a first unit 10 and a second unit 20. "The first unit 10 is a unit to measure the plethysmogram mainly, which is contained within the finger ring type housing 40 to be set to the ball side of the finger 2 (i.e., palm side) when the finger ring type housing 40 is worn on the third joint of the third joint of the finger 2." RX-0015 at ¶ [0192]. "The second unit 20 is a unit to supply a power to the first unit 10 mainly. The second unit 20 is contained within the finger ring type housing 40 to be set to the back side of the finger 2 (i.e., back side of the hand) when the finger ring type housing 40 is worn on the third joint of the finger 2." RX-0015 at ¶ [0193].

Niwa discloses multiple different types of housings to house its plethysmogram sensor: "FIG. 21 is a schematic diagram to explain a principle of the plethysmogram measurement in accordance with the implementation example 2 of the invention. A basic principle of the plethysmogram measurement in accordance with the implementation example 2 and the situation where the amount of light attenuation within a living body (i.e., light absorption level) changes according to the time are understood based on the explanation of FIG. 1 and FIG. 2 of the implementation example 1. However, the "fingertip" in FIG. 1 is substituted as "the third joint" in FIG. 21." RX-0015 at [0190]. Niwa provides an example of a ring housing 40 stating "Moreover, although a construction whose finger type housing 40 of the implementation example 2 is formed as circle completely is illustrated in FIG. 22, the construction of this invention is not restricted to this." RX-0015 at [0204]. Niwa discloses multiple different housings.

[redacted]

FIG.21

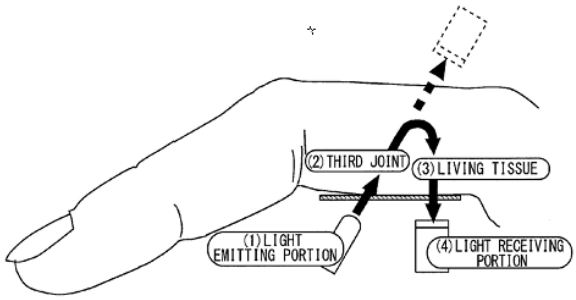

FIG.22

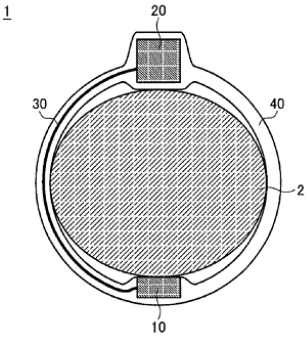

Niwa states: "FIG. 24 to FIG. 26 are perspective diagrams illustrating a situation where the pulse sensor 1 of the implementation example 2 is worn on a third joint of the finger respectively. In addition, FIG. 24 is a see through illustration to see the plethysmogram sensor 1 from the back side of the hand, FIG. 25 is a see through illustration to see the plethysmogram sensor 1 from the palm side of the hand, and FIG. 26 is a see through illustration to see the plethysmogram sensor 1 from the side. As illustrated in these diagrams, to not let the examinee have a consciousness for wearing the plethysmogram sensor 1 (i.e., not let the examinee have an uncomfortable feeling), it is desirable to restrain the largeness of the first unit 10 and the second unit 20 not to protrude from the third joint of the finger 2." RX-0015 at [0206].

[redacted]

FIG.24

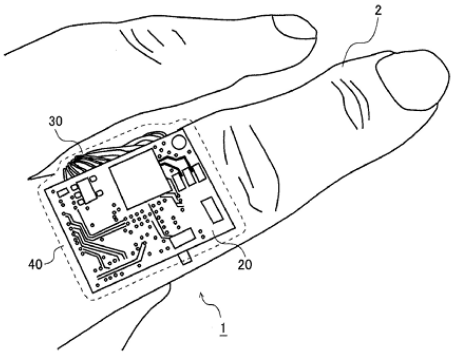

FIG.25

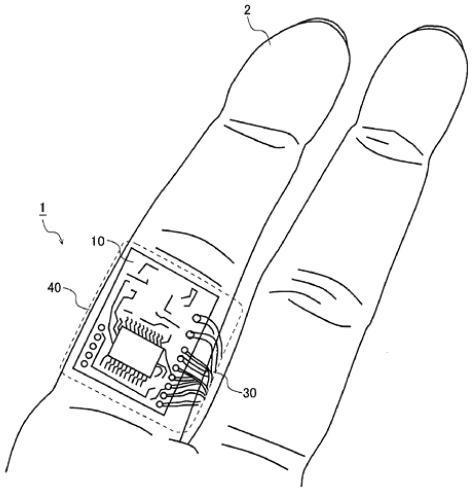

FIG.26

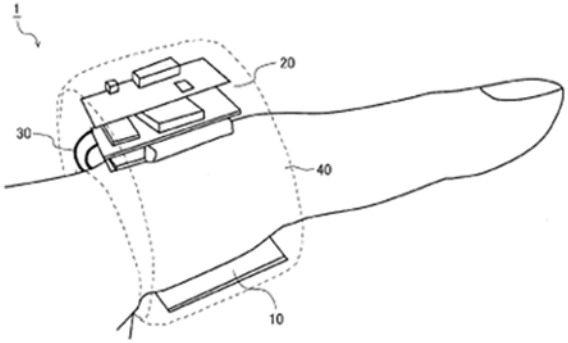

RX-0015 at Figs. 24-26.

Niwa describes the first unit 10 as follows:

FIG. 27 is a cross section diagram illustrating a construction example of a first unit 10 of the implementation example 2 schematically. The first unit 10 of this construction example includes the substrate 11, the light sensor 12, the measurement window 13, the amplifier circuit 14, and the processing circuit 15.

The light sensor 12 is equipped to the surface of the substrate 11 directly, the amplifier circuit 14 and the processing circuit 15 are equipped to the back side of the substrate 11 directly. In addition, the cable 30 to establish an electrical connection with the second unit 20 is connected to the substrate 11. In addition, the electrical connection is established between the surface and back side of the substrate 11 by means of a through hole and a via

> hole. In this way, with respect to a construction to directly equip the light sensor 12, the amplifier 14, and the processing circuit 15, then the first unit 10 can be designed as thin, the wear feeling of the plethysmogram sensor 1 can be enhanced. In addition, with respect to the construction to equip only the light sensor 12 to the surface of the substrate 11, the light sensor 12 can be located at the vicinity of the finger 2 as much as possible, the measurement accuracy of the plethysmogram can be enhanced.
>
> The measurement window 13 is constructed with the translucency portion (i.e., a glass plate or an acrylic plate) which is provided at the light emitting/receiving surface of the light sensor 12. The light sensor 12 performs the measurement of the plethysmogram (i.e., detection for the emitted light to the finger 2 and a reflected light go back from the finger 2) via this measurement window 13. In addition, with respect to the thickness of the measurement window 13, it is desirable to design appropriately in view of the depth of focus of the light sensor 12.

RX-0015 at [0207], [0210]. Niwa also describes the second unit 20 as follows:

> FIG. 28 is a cross section diagram illustrating a construction example of the second unit 20 of the implementation example 2 schematically. The second unit 20 of this construction example includes the first substrate 21, the power source circuit 22, the memory 23, the battery 24, the charging circuit 25, the connector 26, the second substrate 27, and the wireless communication circuit 28.
>
> The power source circuit 22 and the memory 23 are equipped to the surface of the first substrate 21 directly, and the battery 24 and the charging circuit 25 are equipped to the back side of the first substrate 11 directly. In addition, the cable 30 to establish the electrical connection with the first unit 10 is connected to the first substrate 21. Moreover, the electrical connection is established between the surface and back side of the first substrate 21 by means of the through hole and the via hole. In this way, by means of utilizing both side of the first substrate 21 efficiently, the area of the first substrate 21 can be reduced. Therefore, the largeness of the second unit 20 can be restrained not to protrude from the third joint of the finger 2. Furthermore, a consciousness of the examinee for wearing the plethysmogram sensor 1 can be reduced.

RX-0015 at [0213], [0214].

[redacted]

FIG.27

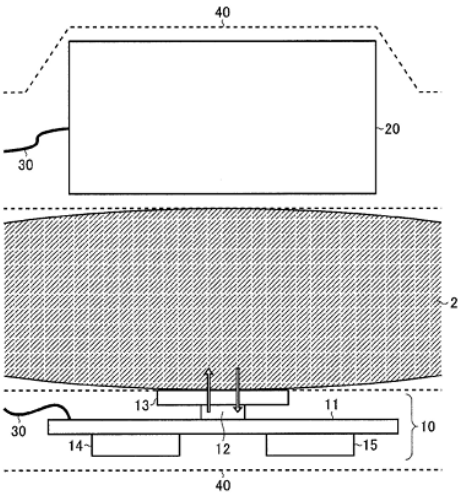

FIG.28

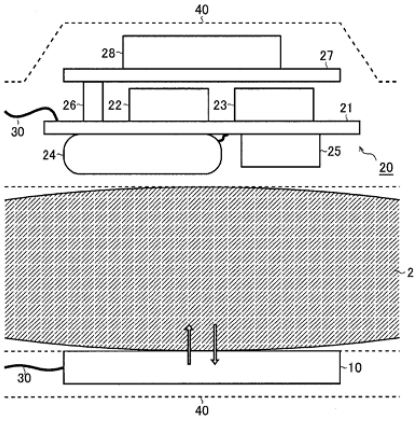

RX-0015 at Figs. 27-28.

7. Wissmar

U.S. Patent App. Pub. No. 2012/0218184 to Wissmar ("Wissmar") titled "Electronic finger ring and the fabrication thereof," was published August 30, 2012. CX-1141. Therefore, Wissmar is prior art to the '178 Patent under at least 35 U.S.C. § 102(a)(2). Wissmar is listed in the references cited on the face of the '178 patent, but it was not cited by the examiner during prosecution. Oura admits that Wissmar is prior art to the '178 Patent. RFA 334 of RX-0326.

Wissmar discloses "a first embodiment of the present invention is a toroidal shaped finger ring structure 1, constituted of two different metallic shells: (i). 1 *a*, made of gold (Au) or silver (Ag), enclosing the major parts of the finger ring structure geometrically described as radially furthest away from the toroids centre, and (ii). 1 *b*, made of a titanium compound (Ti, TiW), being the metal enclosing facing the inner parts of the finger ring structure. The toroidal shaped finger ring structure 1 is comprised of different electronic components: a battery 2, a RF transceiver 3 and a micro processor 4, a microstrip line 5, an accelerometer 6, an internal antenna 7, a pressure sensor 8; all mounted on a flexible printed circuit board 9." Wissmar at ¶ [0073].

[redacted]

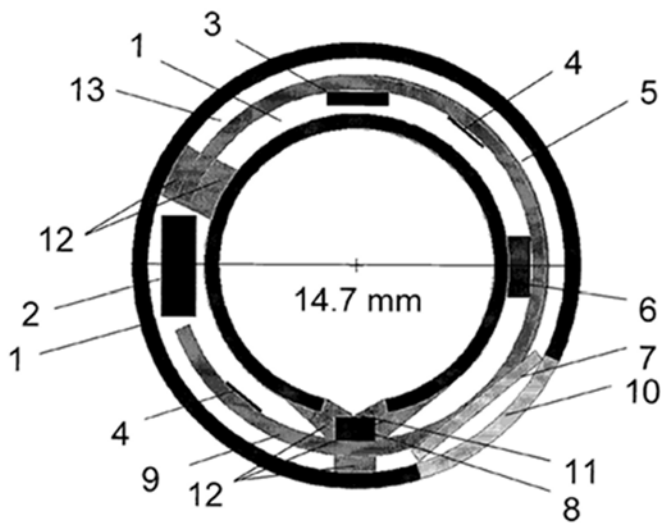

Fig. 1

Wissmar at Fig. 1.

Wissmar further discloses:

In this embodiment, there is also an outer metal shell opening **10** serving as an RF window letting through unperturbed RF radiation. In this embodiment, at the inner boundary of the toroidal shaped finger ring structure **1** located at the pressure sensor **8** there is an inlet hole shaped as a horn cone to maximize the pressure compression ratio at the pressure sensor end **11**. To permanently place the pressure sensor and one end of the flexible printed circuit board in respective places, fixtures **12**, are casted as part of the metallic shell. In this embodiment, there is a protective coating layer **13** located between the outer boundary of the toroidal shaped finger ring structure **1** and the flexible printed circuit board **9**, and another form of protective coating (with cenospheres) 14 located between the inner boundary of the toroidal shaped finger ring structure **1** and the flexible printed circuit board **9**, as explained above. The internal antenna 7 is connected to the RF transceiver **3** by a microstrip line **5**, where the design of the microstrip is optimized to obtain 50 Ω matching impedance. In the case of an external antenna option, the outer shell of the toroidal shaped finger ring structure **1** serves as a coarse antenna. In the case of using exclusively an internal antenna option, the internal antenna is located at a position along the circumference of the toroidal shaped finger ring structure **1** where there is no outer metallic shell covering **10** allowing unperturbed, unidirectional radiation.

Wissmar at [0073].

[redacted]

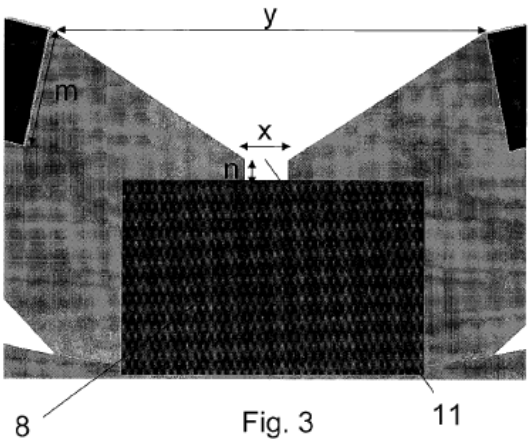

Fig. 3

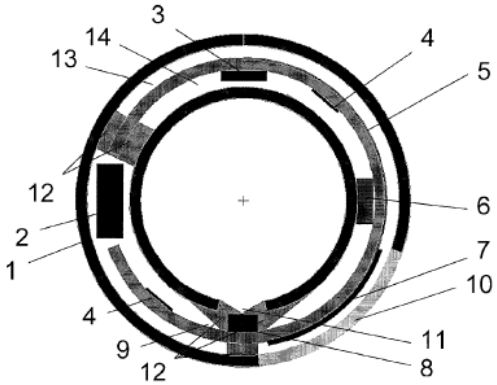

Fig. 5

Wissmar at Figs. 3, 5.

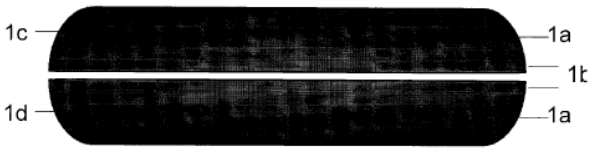

Fig. 9

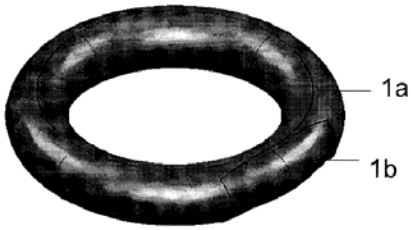

Fig. 11

Wissmar at Figs. 9, 11.

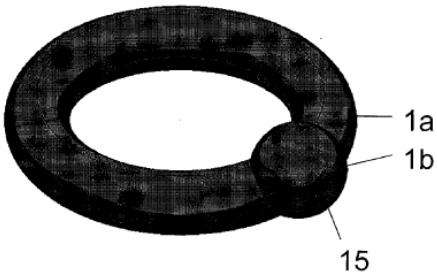

Fig. 12

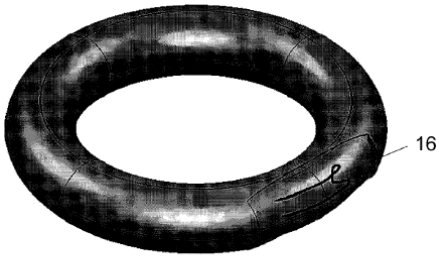

Fig. 13

Wissmar at Figs. 12-13.

[redacted]

Further, Wissmar discloses a battery 2 positioned off of the flexible printed circuit board 9 in every figure battery 2 appears except for Fig. 4. *See* Wissmar at Fig. 1, Fig. 2, Fig. 5, and Fig. 6.

8. Armstrong

U.S. Patent App. Pub. No. 2015/0116125 ("Armstrong") titled "Wristband With Removable Activity Monitoring Device", was published on April 30, 2015. RX-0262. Armstrong was filed on October 24, 2013. Thus, Armstrong was effectively filed before the effective filing date of the '178 Patent. Therefore, Armstrong is prior art to the '178 Patent under at least 35 U.S.C. § 102(a)(2). Armstrong is not listed in the references cited on the face of the '178 patent, and it was not cited or considered by the examiner during prosecution.

Armstrong discloses: "A wearable wristband with a removable device comprises an electronic capsule and a wristband, wherein the electronic capsule comprises a wrist biosensor, a finger biosensor, a watertight casing, a battery, one or more circuit boards electronically coupled to the wrist biosensor and a finger biosensor. The wristband comprises a flexible material notched with a cavity and an aperture, wherein the cavity is shaped to receive the electronic capsule and the aperture shaped to receive the finger biosensor." Armstrong at Abstract.

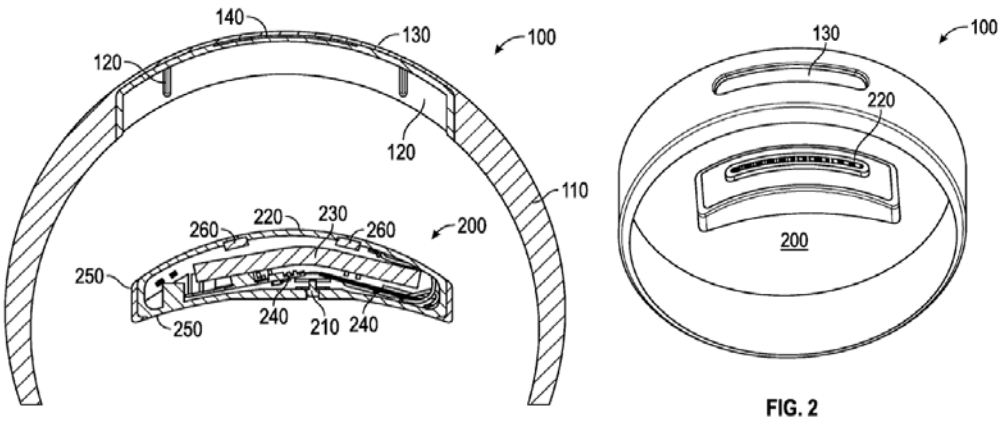

Armstrong at Figs. 1-2.

Armstrong discloses "FIG. 1 is a diagram illustrating a cross-sectional view of an exemplary embodiment of an activity monitoring device. Referring now to FIG. 1, an activity monitoring device comprises an electronic capsule 200 and a wristband 100. The electronic capsule 200 comprises a wrist biosensor 210, a finger biosensor 220, a battery 230, one or more logic circuits 240, and a casing 250. By way of example, the logic circuits may be printed circuit boards (PCB's). Finger biosensor 220 protrudes outward from a first side of casing 250, and wrist biosensor 210 protrudes outward from a second side of casing 250. The battery 230 and logic circuits 240 are enclosed inside of the casing 250. In some embodiments, casing 250 is molded plastic or another moldable material. Additionally, the casing may be sealed using an ultrasonic welding process such that it is watertight. Battery 230 is electronically coupled and supplies power to the logic circuits 240." Armstrong at [0018].

9. Schröder

U.S. Patent No. 10,303,867 to Schröder ("Schröder") was filed on January 25, 2016 as the U.S. national stage application of International Patent Application PCT/EP2014/001693 filed June 18, 2014, which claims priority to foreign application DE 102013012339 filed July 25, 2013. RX-0025; RX-0028. Schröder is prior art to the '178 patent under 35 U.S.C. 102(a)(2). Schröder's German counterpart is essentially identical to the U.S. filing. A certified translation of DE102013012339 has been produced along with parallel citations between the U.S. and German counterpart applications. RX-0026; RX-0027. The figures are identical, and the specification is equivalent. Although Respondents will cite to and focus on Schröder's U.S. patent at the evidentiary hearing, the German document also renders the '178 Patent unpatentable for identical reasons to those relating to the U.S. patent. Moreover, because the described subject matter is identical, Schröder's '867 Patent should be considered to have been effectively filed as of its German priority date of July 25, 2013, because the '867 Patent is entitled to claim a right of priority

[redacted]

to DE 102013012339 under § 365. AIA 35 U.S.C. § 102(a)(2) and (d)(2); MPEP § 2152. Schröder was not listed in the references cited on the face of the ’178 patent , and it was not cited or considered by the examiner during prosecution.

Schröder discloses “a finger-ring 2” and a “smartphone as a communication device 4,” that connects to the finger-ring 2. Schröder at 3:57-58. “The finger-ring 2 is worn by a user e.g. permanently on the finger.” Schröder at 3:61-64.

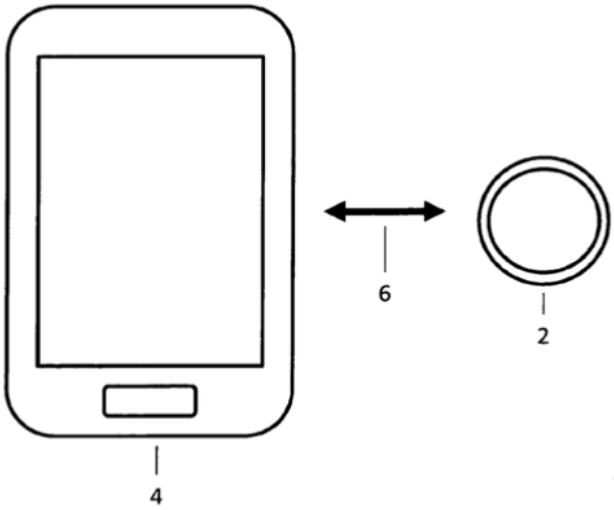

Fig. 1

Schröder shows that many construction variants for a ring housing with a recess to house electrical components were well known to the POSA. “The finger-ring 2 consists of two ring halves 16 and 18. The two ring halves 16 and 18 respectively have a recess into which the inlay 12 is inserted.” Schröder at 12:7-9. “The inlay 12 can have at least one chip module 10 with at least one antenna coil 8, with at least one further electronic device, e.g. a display, optionally being arranged on the inlay 12.” Schröder at 12:62-65.

“FIGS. 4 to 10 describe, by way of example, possible construction variants of an external secure unit 2 in the form of a finger-ring 2.” Schröder at 12:1-3. Schröder discloses that “FIG. 4

[redacted]

shows a longitudinal section through a finger-ring 2. Here, an inlay 12 is inserted into one half 18 of the finger-ring 2. FIG. 5 shows a cross section, corresponding to FIG. 4, of the finger-ring 2. The finger-ring 2 consists of two ring halves 16 and 18. The two ring halves 16 and 18 respectively have a recess into which the inlay 12 is inserted." Schröder at 12:4-10.

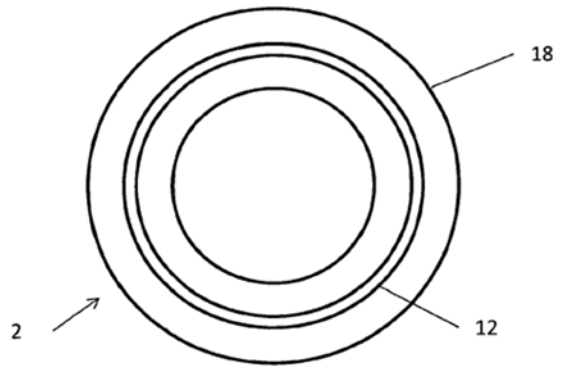

Fig. 4

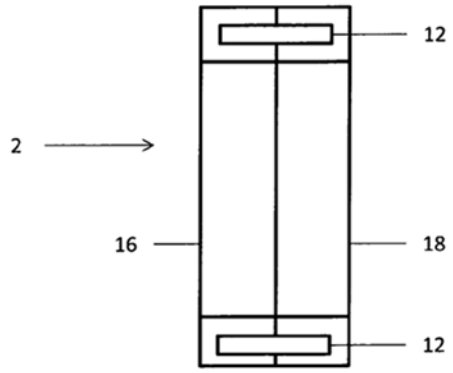

Fig. 5

Schröder at Figs. 4-5.

Schröder discloses that "FIGS. 6 to 10 show different cross sections through a finger-ring 2, consisting of ring-shaped components 16, 18 of the finger-ring 2 and of an inlay 12. FIG. 6 shows a cross section with the components 14 and 16 having an L-shaped profile. Between the two L-shaped components 16 and 18 an inlay 12 is arranged. FIG. 7 accordingly shows two U-shaped components 16 and 18 between which an inlay 12 is arranged. FIG. 8 shows a U-shaped component 18 and an even component 16, with the inlay 12 being arranged between the components 16 and 18. FIG. 9 shows two even components 16 and 18 between which the inlay 12 is arranged. FIG. 10 shows an L-shaped component 18 and an even component 16 between which the inlay 12 is arranged." Schröder at 12:43-55. Schröder's cross sections are rotated around to form the ring.

[redacted]

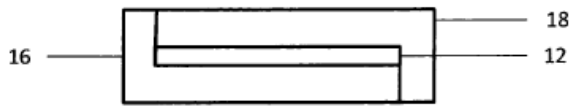

Fig. 6

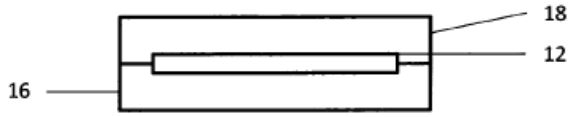

Fig. 7

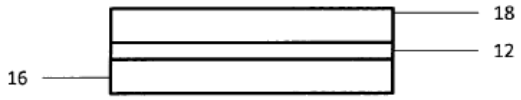

Fig. 9

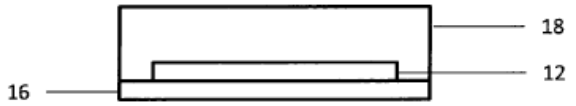

Fig. 8

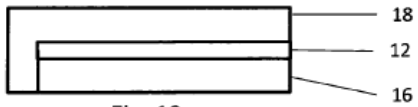

Fig. 10

Schröder at Figs. 6-10. Schröder evidences that the POSA would have known that there were multiple ways to design a housing.

"The components 16, 18 of the finger-ring 2 can be manufactured from like or different materials. Materials that can be used are e.g. plastic or carbon, with at least one ferrite element having a suitable structure and form optionally being arranged between the components 16 and 18. In the finger-ring 2 as an external secure unit 2 there can be arranged at least one inlay 12. The inlay 12 can have at least one chip module 10 with at least one antenna coil 8, with at least one further electronic device, e.g. a display, optionally being arranged on the inlay 12. Optionally, the finger-ring 2 can have an interruption, so that the finger-ring 2 is not closed. It is advantageous that the finger-ring 2 can be manufactured in different dimensions, in particular diameters, without the antenna coil 8 or the chip module 10 having to be adapted to the changed dimensions which influence the antenna frequency." Schröder at 12:56-67.

10. Development of the Ring Sensor for Healthcare Automation (Yang)

Boo-Ho Yang, Development of the Ring Sensor for Healthcare Automation, Robotics and Autonomous Systems 30 (2000) 273-281, 1999, ("Yang") is an article that published in 1999 and

[redacted]

thus is prior art to the '178 Patent under 35 U.S.C. § 102 (a)(1). CX-1121. Yang discloses a ring sensor with a battery positioned between the internal housing component and the external housing component. Yang was not listed in the references cited on the face of the '178 patent, and it was not cited or considered by the examiner during prosecution. Yang evidences the POSA's knowledge to move the battery inside the housing 15 years before the filing of the provisional application that led to the '178 patent.

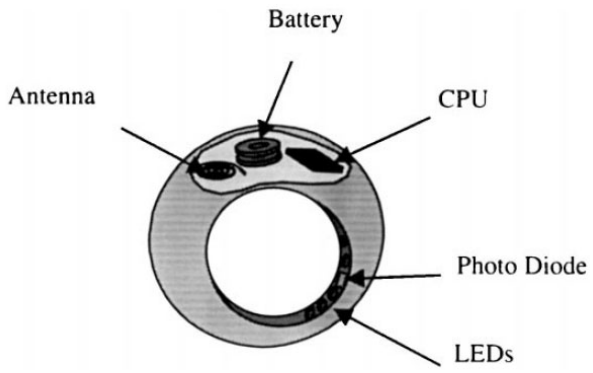

Fig. 1. Conceptual diagram of the ring sensor.

Yang at Fig. 1.

D. The State of the Art

Smart rings that monitor a person's health have been known since at least 15 years before the earliest claim of priority of the '178 patent. *See, e.g.*, Asada filed in 1997. Asada disclosed that "[m]ultiple ring bands and sensor elements may be employed for deriving three-dimensional dynamic characteristics of arteries and tissue of the finger." Asada at Abstract. Asada also disclosed multiple different housings for smart rings emphasizing that the design of the housing itself was nothing more than routine mechanical skill. Asada itself included a battery, a printed circuit board, and one or more sensors that acquired data from the user. Asada at 3:28-47. Schröder likewise disclosed multiple different housing for the smart rings.

[redacted]

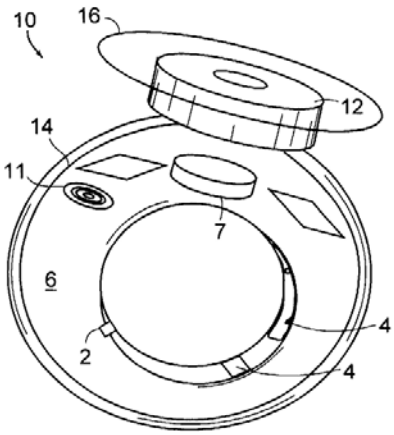

FIG. 1

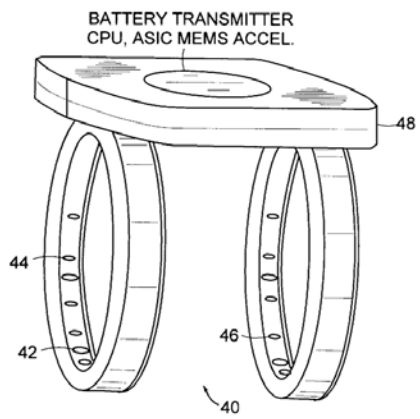

FIG. 4

Asada at Figs. 1, 4.

The POSA knew that technology for other wearable sensors is also applicable to finger rings. For example, Babashan states that it's device "may be designed to be worn on different body parts, such as wrists, fingers, ears, neck, chest or ankles. It may be fashionably designed so that it may match a user's clothing, jewelry or accessories." RX-0014 at [0086].

There were many finger-worn rings that included housing components, batteries, printed circuit boards, sensors, LEDs, all of which are basic components that have been used long before November of 2013. Curved batteries in particular were well known in the art prior to November 2013 such that curved batteries of the size and shape that would fit within a ring were commercially available from various vendors including GMBPow. CX-1138. A print out of the GMBPow website from October 21, 2013 shows that curved 201030 Lithium Polymer Batteries were available for sale before the earliest claimed priority date of the '178 patent. GMBPow can make these batteries "at the clients requested quantity" of up to "300K per day." *Id.* The examiner did not consider the GMBPow website or list it as a cited reference for the '178 patent.

[redacted]

Curved LiPo201030

Item:	Curved 201030 Lithium Polymber Battery
Brief:	Curved lithium polymer batteries can be made at clients requirement, and it is one of our hit products, Bendable, rechargeable, thin, light, and with long shelf life

Battery shape:

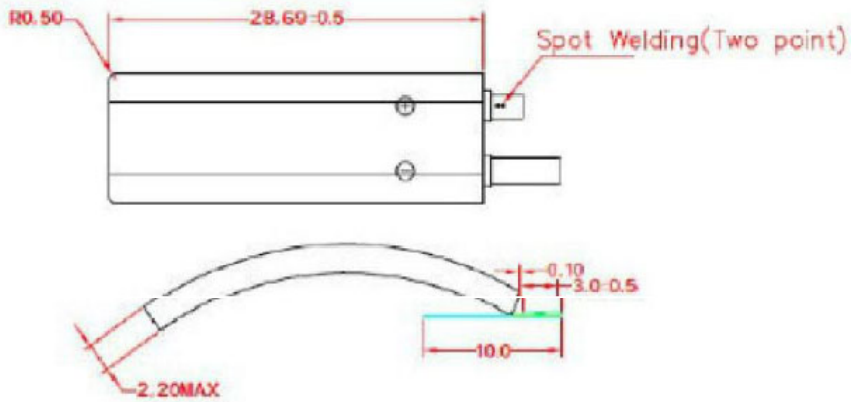

The First Step: a)The Al-Band is wrapped in Ni-band and two points spot welding

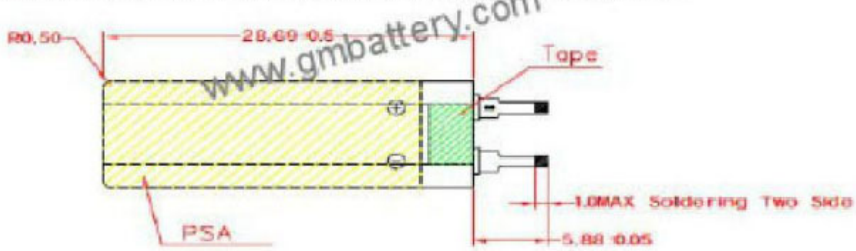

www.gmbattery.com

[redacted]

Specifications:

TYPE	Thickness	Width	length	Rated Capacity	Nominal Voltage	Charge current	Charge time	Discharge current
	(mm)	(mm)	(mm)	(mAh)	(V)	(mA)	(H)	(mA)
201021	2.0	10	21	25	3.7	0.2C	5~8H	0.2C
201024	2.0	10	24	28	3.7	0.2C	5~8H	0.2C
201030	2.0	10	30	41	3.7	0.2C	5~8H	0.2C
202580	2.0	25	80	270	3.7	0.2C	5~8H	0.2C
205080	2.0	50	80	550	3.7	0.2C	5~8H	0.2C
252090	2.5	20	90	260	3.7	0.2C	5~8H	0.2C
252270	2.5	22	70	320	3.7	0.2C	5~8H	0.2C
254045	2.5	40	45	300	3.7	0.2C	5~8H	0.2C
233045	2.3	30	45	200	3.7	0.2C	5~8H	0.2C
233070	2.3	30	70	370	3.7	0.2C	5~8H	0.2C
242269	2.5	22	60	340	3.7	0.2C	5~8H	0.2C
251343	2.5	13	43	85	3.7	0.2C	5~8H	0.2C

Id. The Wayback Machine is an internet archive that shows how webpages looked at a given point in time. Given the declaration by Nathaniel E Frank-White, the URL https://web.archive.org/web/20131021213138/http:/www.gmbattery.com:80/product/showproduct.php?lang=en&id=527, and the exhibit, this document shows the GMBPow website from October 21, 2013. *Id.*

Every single year battery technology and capacity improved. GMBPow also included various other related batteries for sale such as:

[redacted]

Id. GMBPow stated on their website that the main applications for curved batteries are wearable devices. *Id.*

The GMBPow website in 2013 also included a description on how batteries were made and including 24 individual steps:

[redacted]

SPECIFICATIONS | How Made?

Lithium Polymer Battery Work-Flow

1.Mixing

•Mix solvent and bond separately with positive and negative active materials. Make into positive and negative pasty materials after stirring at high speed till uniformity.

2. Coating

•Coat metal foils uniformly with the made-up pasty materials on two sides. Then make sheets dry.

3. Pressing

• Press the above positive and negative sheets till they become flat.

Thus, curved batteries that can fit in finger rings and how to make them was known in the art prior to November 2013.

Other flexible and curved batteries were also available prior to November 2013. CX-1100. This includes Thinergy batteries that were Solid-State, Flexible, Rechargeable Thin-Film Micro-Energy Cells that could be used in rings. CX-1100; CX-0001C ("Other possible solutions are available, most notable Thinergy which offers many solutions but would require customization"); CX-1099C. A smart "watch runs on a thinergy battery and charges for ten minutes to run for over a month," according to Curt von Badinski. *Id*. Thinergy batteries were flexible batteries that can be curved and were used in many different applications of at least July 2012. CX-1100. The inventors of the '178 patent were looking at the technology in all wearables including armbands

[redacted]

and rings. CX-1099C; RX-0289; RX-0292. These documents also were not considered by the examiner during the prosecution of the ’178 patent.

Furthermore, Michael Strasser obtained samples of curved batteries that would have an arc that approximates an arc of an external housing component of a ring when he visited China. *See* RX-0236. The curved battery technology was available at the time of invention, and the technology to make pre-formed curved batteries at various sizes was also available in the art. Dr. Rosing agrees as she opines that based on the size of a product and amount of capacity, a POSA could “select an appropriate curved battery for use in the claimed finger-worn wearable ring device.” RX-0411C at ¶ 467.

RX-0233-0237.

Dr. Rosing cites an image with cheerios in order to illustrate the size of the GMBPow battery. RX-0411C at ¶ 120. She opines that “[f]or comparison, a typical cheerio is about 1 cm in diameter, meaning that this battery [2x10x21mm GMBPow battery] is approximately the length

and width of two Cheerios placed side by side." *Id.* The curved batteries would fit inside of a finger ring, in which the patent itself provides dimensions with an interior d1 ranging from 12 to 24mm and an external diameter can range between 18 and 30mm. That would make the inner circumference between 38 and 75mm and an outer circumference between 56 and 94mm. The GMBPow battery would easily fit within a finger ring, having a length of 21mm and a capacity of 25 mAh. The other curved batteries listed by GMBPow and other curved batteries known in the art would also have worked with a finger-ring.

Curved batteries were also used in finger-worn rings prior to November 29, 2013. RX-0028. U.S. Patent Application Publication No. 2014/0279528 to Slaby was filed on November 15, 2013 and is prior art to the '178 patent under 102(a)(2). Slaby teaches:

> The wearable authentication device 102 can include a power source 114 to power the fingerprint sensor 108. For example, the ring 104 includes the power source 114 and associated circuitry, such as a flexible strip battery, a rechargeable battery, an RF signal received from the associated device 106 and stored for near-field communication (NFC), a charged super-capacitor, and/or any other type of active or passive power source that may be implemented in a wearable authentication device. An example of a charging device that can be used to charge the power source 114 of the wearable authentication device 102 is shown and described with reference to FIG. 3.

RX-0028 at [0020].

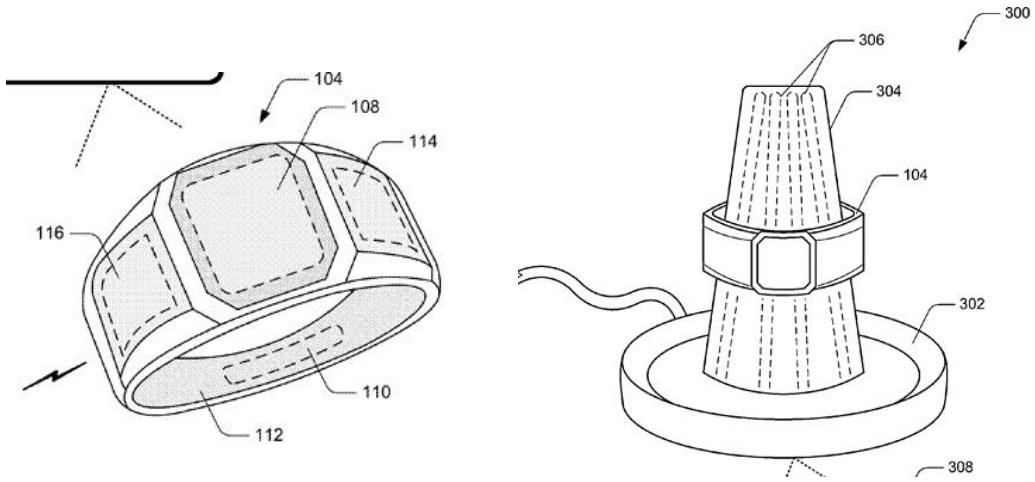

RX-0028 at Fig. 1. And "[a]n example of a charging device that can be used to charge the power source 114 of the wearable authentication device 102 is shown and described with reference to FIG. 3." RX-0028, Slaby at [0020], [0034]. Thus, the POSA knew about curved batteries in finger-worn wearable ring devices that would power various sensors including accelerometers, gyroscopes, infrared light, movement detection, presence sensor 110 inside the band 112. RX-0028 at [0013], [0021]. Slaby also disclosed Bluetooth and NFC capabilities with, for example a data exchange system 116, and a fingerprint sensor 108. RX-0028 at [0013], [0021]. Slaby's ring can use both wireless and wired charging. RX-0028 at [0034]. Thus, thin flexible batteries that are curved and have an arc that approximates a corresponding arc of the external housing component were known to the POSA and could be used in finger-worn rings. RX-0028.

E. Asada in view of the POSA's knowledge; and Asada in view of Other References Renders Obvious the Asserted Claims

Asada and the MIT papers showed that the idea of using a ring as a wearable sensor was not new. For example, Asada was filed more than 15 years before earliest claim of priority of the '178 patent.

1. Claim [1-pre]: Asada; Asada in view the POSA's knowledge; and Asada in combination with Other References discloses "[a] finger-worn wearable ring device, comprising:"

The preamble of claim 1 recites: "[a] finger-worn wearable ring device, comprising." The parties have agreed that the preamble is limiting. Mr. Alarcon will testify that Asada provides such a disclosure. Specifically, that Asada discloses "[i]n accordance with a preferred embodiment of the present invention, a patient's health status is monitored by an article of apparel, such as a finger ring, equipped with miniaturized sensors and a wireless transmitter." CX-1134, RX-0010 at 1:53-56.

[redacted]

2. Claim [1a]: Asada; Asada in view the POSA's knowledge; and Asada in combination with Other References discloses "an external housing component defining an outer circumferential surface of the finger-worn wearable ring device;"

Claim 1 recites "an external housing component defining an outer circumferential surface of the finger-worn wearable ring device." Mr. Alarcon will testify that Asada provides such a disclosure.

Specifically, that Asada discloses "[a] simple finger ring sensor with a wireless transmitter has been designed to demonstrate the concept. As shown in FIG. 1, one or more photo diodes 2 and one or more light-emitting diodes (LEDs) 4 are imbedded in a ring 10 facing each other inside the ring." RX-0010 at 3:28-32. And "[t]his ring may be placed on one of the fingers. In a preferred embodiment, ring 10 is placed on the middle finger, which is not only convenient for wearing the ring but also suitable for counting pulse." RX-0010 at 3:36-40.

Mr. Alarcon will testify that a POSA would understand that the "finger ring sensor" in Fig. 1 has an external housing component that defines an outer circumferential surface as shown below.

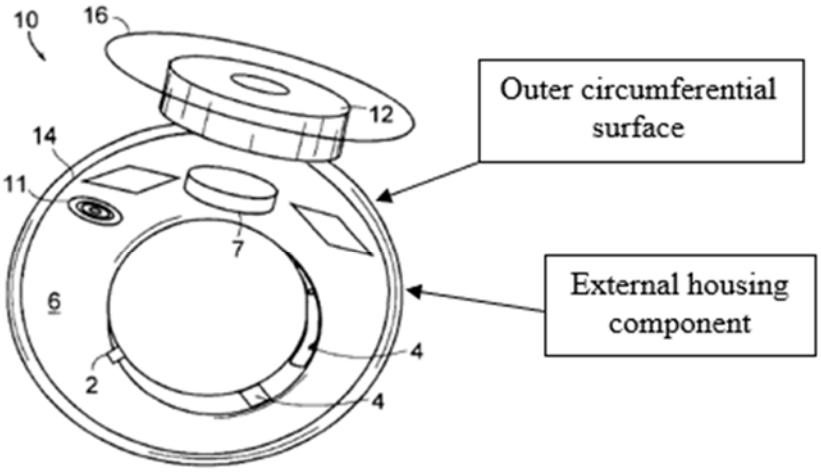

FIG. 1

RX-0010 at Fig. 1 (annotations added). This surface is circumferential. However, Mr. Alarcon will testify that to the extent that this surface is not entirely circumferential this modification would

have been obvious, considering that Asada wanted to create a ring and because the POSA would have used the curved battery inside of Asada rather than on top of the ring. Rings with circumferential outer surfaces were well known in the art and modifying a ring's outer surface is simple mechanical skill. The POSA would want to use a circumferential surface so that the wearable computing device appears to consumers like a ring.

And Asada's above external housing component is a structure that encloses space. Accordingly, Asada discloses this limitation.

Mr. Alarcon will testify that a POSA would also understand that the external housing component defines an outer circumferential surface. Asada's inner circumferential surface in Figs. 1 and 4 have longitudinal thicknesses which indicates that the inner ring surface defines a surface. A POSA would understand that the outer ring surface of Fig. 1 could mirror the inner ring surface as demonstrated by the two ring bodies pictured in Figure 4 below.

To the extent that Asada's Figure 1 embodiment is unclear or does not explicitly disclose the outer circumferential surface limitations, the Figure 4 embodiment shows a double-band ring that includes a housing structure for each band that is applicable to Asada's Figure 1 embodiment that uses a single-band ring.

For example, Asada discloses that in Fig. 4, "spatially distributed optical sensors are employed in the ring configuration to monitor a patient's health conditions. Photo diodes 42 and LEDs 44 of appropriate wavelengths may be imbedded not only along the ring facing inwards, but also distributed in the longitudinal direction of the finger or other body member with a double-band configuration 40. The signal processing electronics, transmitter, antenna, battery, and MEMs accelerometer are contained within sensor module 48 in a manner described with reference to FIG. 1." RX-0010 at 4:48-58; Fig. 4.

[redacted]

Mr. Alarcon will testify that it would have been apparent to the POSA that the Figure 4 housing is applicable to the Figure 1 housing, and therefore it would have been obvious to use a ring body similar to one of the rings from Asada's Figure 4 embodiment as the single-band ring body in Asada's Figure 1 embodiment. This change would have involved only routine mechanical skill of the POSA and would have been obvious, as evidenced by Asada's disclosure of its Figure 4 embodiment. The POSA would have been motivated to use the Figure 4 ring body to provide more space for components inside the ring, provide a more comfortable fit, and provide for easier/simpler manufacture. Asada's multiple different housings show how the claimed internal and external housing components are obvious.

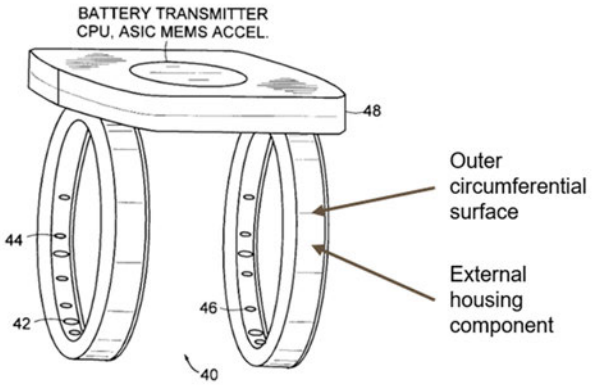

FIG. 4

Asada Fig. 4.

In other words, a POSA would understand that the ring body from Fig. 1 could have the same structure as the two ring bodies illustrated in Fig. 4. And the two ring bodies in Fig. 4 have internal and external housing components, with perpendicular side walls connecting them.

To the extent separate components are required, in view of the disclosures above, it would have been apparent from Asada's disclosure and obvious to a POSA to have at least one housing component as a separate non-unitary component to allow for the placement or positioning of the

[redacted]

internal components illustrated inside the housing structure. Thus, the internal and external housing components would be connected to one another through the side walls.

Moreover, using separate components to form ring housings to house internal electric circuits or components was also known in the art prior to November 2013 as evidenced by Wissmar and Schröder. Schröder discloses a ring cross section with an external housing component, an internal housing component, a first wall, and a second wall. And the first and second walls are substantially perpendicular to one of the external housing component, the internal housing component, or both in Fig. 8.

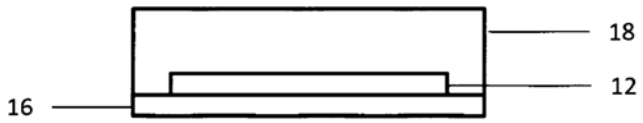

Fig. 8

Schröder at Fig. 8, *see also* Schröder at Figs. 6-10.

Wissmar discloses that "[i]n FIG.9 during fabrication of the electrical finger ring, welding the respective halves 1c, 1d of the toroidal ring." Wissmar at [0085], Fig. 9.

A POSA would be motivated to manufacture Asada as described above with separate housing components as disclosed by Schröder and Wissmar to easily place the internal electrical components in between Asada's inner and outer bands as described above.

The POSA understands that Asada's external housing component is made of a non-potting material that provides an enclosing structure. To the extent Asada does not explicitly disclose the material of the external housing component, forming ring structures from metal and other non-potting material was well known prior to November 2013 as evidenced by at least Wissmar. For example, "[w]ith reference to Figs. 1 and 2, a first embodiment of the present invention is a toroidal shaped finger ring structure 1, constituted of two different metallic shells…" Wissmar at [0073],

[redacted]

Figs. 1 and 2. A POSA would have been motivated to manufacture Asada's external housing component to include at least some non-potting material at least for ease of manufacturing and for structural support.

3. Claim [1b]: Asada; Asada in view the POSA's knowledge; and Asada in combination with Other References discloses "an internal housing component defining an inner circumferential surface of the finger-worn wearable ring device, the internal housing component coupled with the external housing component, wherein at least a portion of the inner circumferential surface of the internal housing component is configured to contact a tissue of a user when the finger-worn wearable ring device is being worn by the user;"

Claim 1 recites "an internal housing component defining an inner circumferential surface of the finger-worn wearable ring device, the internal housing component coupled with the external housing component, wherein at least a portion of the inner circumferential surface of the internal housing component is configured to contact a tissue of a user when the finger-worn wearable ring device is being worn by the user." Mr. Alarcon will testify that Asada provides such a disclosure.

Asada in its Fig. 1 embodiment described above discloses an internal housing component defining an inner circumferential surface.

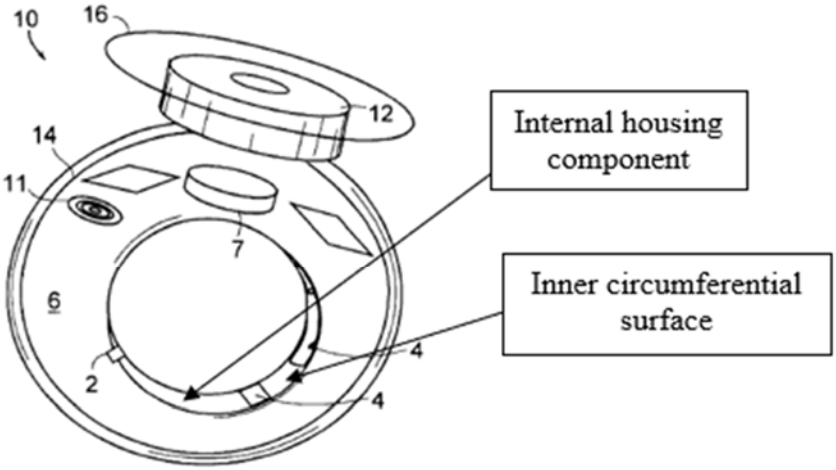

FIG. 1

RX-0010 at Fig. 1 (annotations added). The internal housing component is connected to the external housing component by Asada's side walls. The external housing component is a different structure than the internal housing component because the external housing component defines the outer circumferential surface and the internal housing component defines the inner circumferential surface. *See e.g.*, '178 patent at Figs 4, 6, 16, and corresponding text. The POSA also understands that the components needed to be placed into Asada's housing in some manner, which would involve using various permutations for the housing. The POSA's knowledge about ring housings is also evidenced by Schröder.

Asada's internal housing component is a structure that encloses space. Asada's internal housing component is also an enclosing structure that comprises a non-potting material; and is a structure that encloses space, rather than fills space. Accordingly, Asada discloses this limitation under any of the parties' proposed constructions.

Furthermore, Asada as modified with the ring body embodiment from Fig. 4 also discloses an internal housing component defining an inner circumferential surface. And to the extent necessary, Asada in its Fig. 1 embodiment with separate components or modified with the ring bodies of Fig. 4 with separate components would still disclose an internal housing component defining an inner circumferential surface. The shape of each would remain the same—just one of the components would be manufactured separately. Asada's multiple different housings show how the claimed internal and external housing components are obvious.

[redacted]

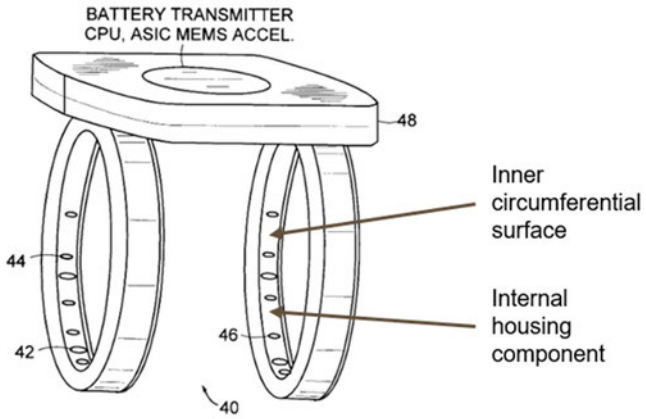

FIG. 4

RX-0010 at Fig. 4 (annotations added).

And in any of the embodiments described above, the housing components are coupled or connected with one another either through side walls like the Fig. 1 and Fig. 4 ring embodiments, or because the components are connected as described by Schröder/Wissmar.

Claim 1 further recites: "wherein at least a portion of the inner circumferential surface of the internal housing component is configured to contact a tissue of a user when the finger-worn wearable ring device is being worn by the user." Mr. Alarcon will testify that Asada alone, Asada as modified with Asada's Fig. 4 embodiment, or Asada as modified to have separate components provide such a disclosure.

Asada discloses a finger ring which is configured to contact the skin of the user. For example, "[a] sensor is incorporated in a finger ring or other article of apparel so as to monitor skin temperature, blood flow, blood constituent concentration, or pulse rate of the patient." RX-0010 at Abstract. Mr. Alarcon will testify that a POSA would understand that Asada's finger ring contacts the tissue of a user because Asada's finger ring takes skin temperature readings and monitors the user's blood flow while worn by the user. A POSA would understand that these measurements are taken by contacting the skin and tissue of the user. Moreover, Asada's Fig. 4

[redacted]

inner circumferential surface also contacts the skin of the user because similar measurements are taken by the Fig. 4 embodiment. *See* RX-0010 at 4:48-58.

4. Claim [1c]: Asada in view the POSA's knowledge; and Asada in combination with Other References renders obvious "a battery positioned within a cavity formed between the internal housing component and the external housing component, wherein the battery comprises a shape and size configured to fit within the cavity between the outer circumferential surface of the external housing component and the inner circumferential surface of the internal housing component, and wherein the battery extends through at least a first portion of the cavity of the finger-worn wearable ring device;"

Claim 1 recites: "a battery positioned within a cavity formed between the internal housing component and the external housing component, wherein the battery comprises a shape and size configured to fit within the cavity between the outer circumferential surface of the external housing component and the inner circumferential surface of the internal housing component, and wherein the battery extends through at least a first portion of the cavity of the finger-worn wearable ring device." Mr. Alarcon will testify that Asada in view of the POSA's knowledge and/or the Other References provides such a disclosure.

Asada discloses a battery for its Fig. 1 embodiment. For example, "[r]eferring again to FIG. 1…[p]ower is provided by battery 12." RX-0010 at 4:24-38.

[redacted]

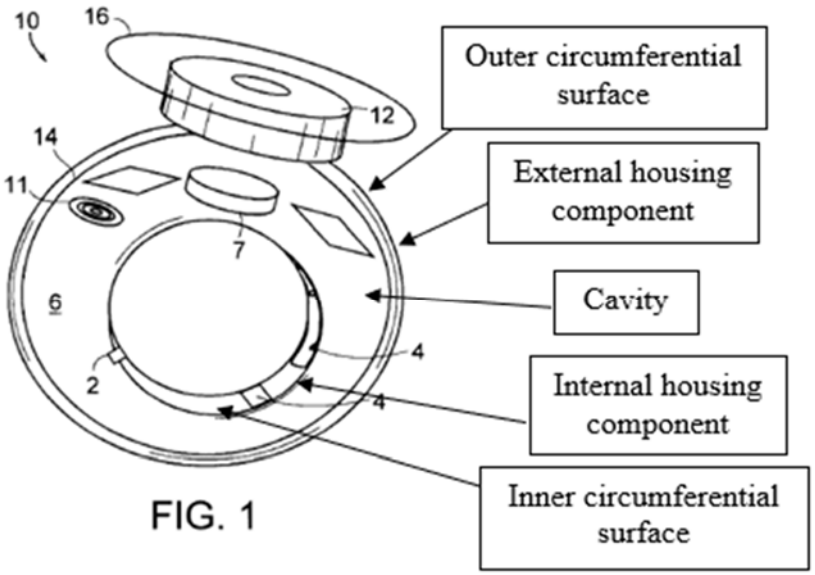

RX-0010 at Fig. 1 (annotations added).

Asada's battery 12 is mounted exterior to the housing, but it would have been obvious to a POSA at the time of invention to incorporate or modify the battery into Asada's housing such that it satisfies this limitation. Over time as batteries became smaller, they could be fit into the cavity formed between the internal housing component and the external housing component. This involved nothing more than routine mechanical skill. The POSA understands that there is a cavity between the internal housing component and the external housing component of Asada because Asada places components inside the ring and Asada does not disclose that it has material other than the components in the ring. A POSA understands in view of Fig. 1 and Asada's disclosure, that there is a cavity that surrounds the components and exists independent of the components.

To the extent that Asada does not explicitly disclose a cavity, the inclusion and use of a cavity between housing components for receiving internal components was well known prior to November 2013, as evidenced by at least Wissmar. *See* Wissmar at Figure 1. A POSA would have been motivated to manufacture Asada to include a cavity that exists independent of the components, as disclosed by Wissmar, for ease of manufacturing of Asada. Having a cavity in

between internal and external housing components was obvious to the person having ordinary skill in the art. To the extent that Asada does not have a cavity inside of its ring, this would be a simple design change that would be obvious to try.

Furthermore, a POSA would be motivated to place a battery "configured to fit within the cavity between the outer circumferential surface of the external housing component and the inner circumferential surface of the internal housing component" by simply examining the curved housing and selecting a battery to mirror the size and shape of the curved housing. Eric Strasser described the obvious nature of developing the battery for the ring:

> Q. And the idea of a curved battery is from the idea that you have a curved housing; is that right?
> A. Correct, we wanted to create a product that looked like a ring.
> Q. And so for a battery to be used in a curved housing, the battery would also need to be curved?
> A. Correct.

E. Strasser at 191:6-14. *See also id*. at 190:16-23.

Mr. Strasser also testified that others already "knew how to [make the curved battery]" and "they already had the process in place." And that the battery manufacturer "had product that we identified as the solution to what we were looking for," "had the experience of building it," and "they had batteries small enough to fit in a wearable device which could be constructed as a ring" when the inventors approached this company. E. Strasser Tr. at 194:9-14, 205:9-16.

As to the availability of the curved battery (i.e., a battery configured to fit within the cavity formed by the housing components), Mr. Strasser answered "Yeah" when asked "did the [company] have the technology to develop curved batteries prior to November 2013?." E. Strasser Tr. at 195-196. Mr. Strasser also stated "they were selling batteries…to a few other companies" and that a band the artist Will.i.am was selling "got a lot of press" and "was a curved battery." And he said "that's how we found them." *Id.* The inventors simply approached curved battery

[redacted]

manufacturer found through looking at wrist wearables to find the curved battery product ultimately used in the invention claimed in the ’178 Patent. *Id.*

Boo-Ho Yang, Development of the Ring Sensor for Healthcare Automation, Robotics and Autonomous Systems 30 (2000) 273-281, 1999, (“Yang”) is prior art under 35 U.S.C. § 102 (a)(1) and discloses a ring sensor with a battery formed between the internal housing component and the external housing component as required by the claim. Yang evidences the POSA’s knowledge to move the battery inside the housing 15 years before the provisional application that led to the ’178 patent was filed.

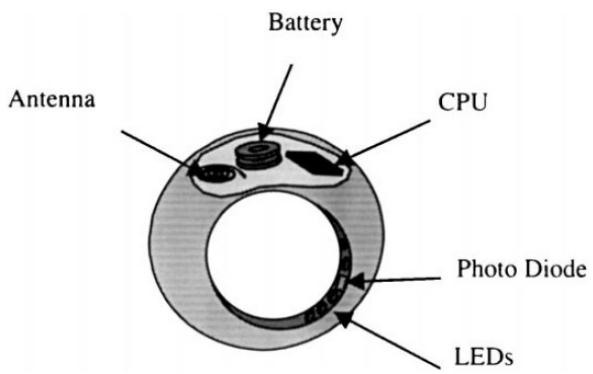

Fig. 1. Conceptual diagram of the ring sensor.

Yang at Fig. 1.

Likewise, Wissmar discloses a battery within a cavity between two circumferential surfaces.

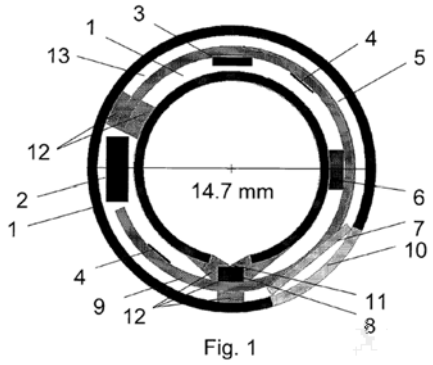

Fig. 1

[redacted]

Wissmar at Fig. 1.

"The toroidal shaped finger ring structure 1 is comprised of different electronic components: a battery 2, a RF transceiver 3 and a microprocessor 4, a microStrip line 5, an accelerometer 6, an internal antenna 7, a pressure sensor 8; all mounted on a flexible printed circuit board 9." Wissmar at [0073].

The POSA would be motivated to move the battery into the cavity between the housing components to save space and provide a more natural ring structure for the user to wear. And the POSA would have been motivated to use one of the curved batteries that would approximate the arc of Asada's external housing component as disclosed below.

For example, Webster discloses a ring 100 including a flexible circuit board 102. The flexible circuit board 102 supports a radio frequency device 200 which includes, among other things, a battery 212. Webster at 1:40-61, 5:8-12. "A battery 212 together with voltage regulation circuitry can supply the proper voltage to each of the circuit elements. The battery 212 can, in one embodiment, be a thin film lithium ion or zinc-manganese dioxide chemistry battery that can be bent or curved. Webster at 5:8-12. It would have been obvious to use Webster's battery in Asada because it naturally would have fit inside of Asada's housing and doing so would increase the battery capacity and life of the device.

[redacted]

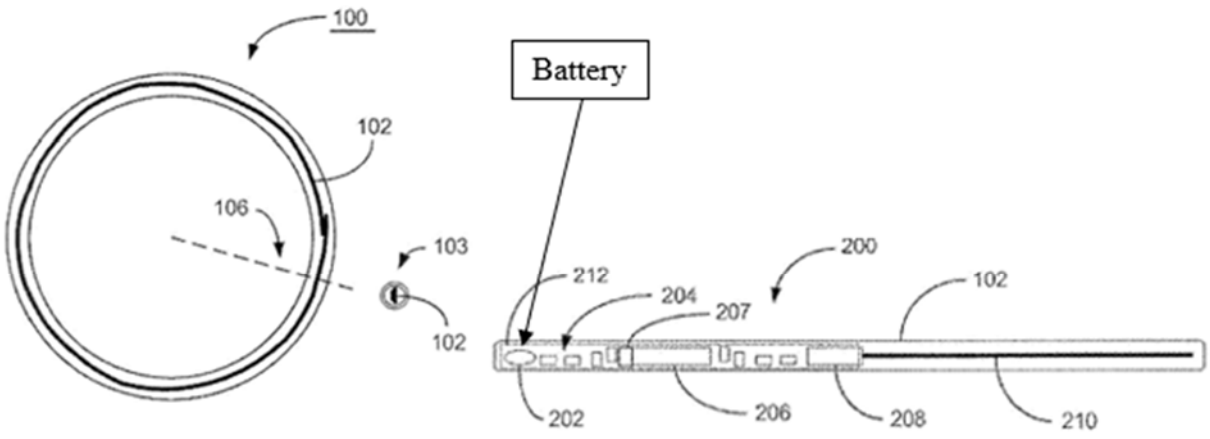

FIG. 1 FIG. 2A

Webster at FIGS. 1 and 2A (annotations added).

Henderson is directed to a batteries and power management in a ring-shaped activity monitoring device with curved batteries that measures various biometric information. Henderson states that its "batteries 142 have a curvilinear or curved configuration" that "are generally flush with the inner surface 32 of the spine member 22," which is curved. Henderson at ¶ [0077]. Henderson also discloses "the device may include one or more functional batteries of a curved profile," and discloses how to make curved batteries. Henderson at ¶ [0125]. "Accordingly, the device may include one or more functional batteries of a curved profile." *Id*. The POSA understands from Henderson's disclosure that a ring, similar to an oval/bracelet, would "require[] a volume of space allocated to the batteries to also take this curved or radial profile." *Id*. It would have been obvious to use Henderson's battery in Asada because Henderson teaches that its battery can be different sizes and would have naturally contoured to fit inside of Asada's housing and doing so would increase the battery capacity and life of the device. Henderson at ¶ [0078].

[redacted]

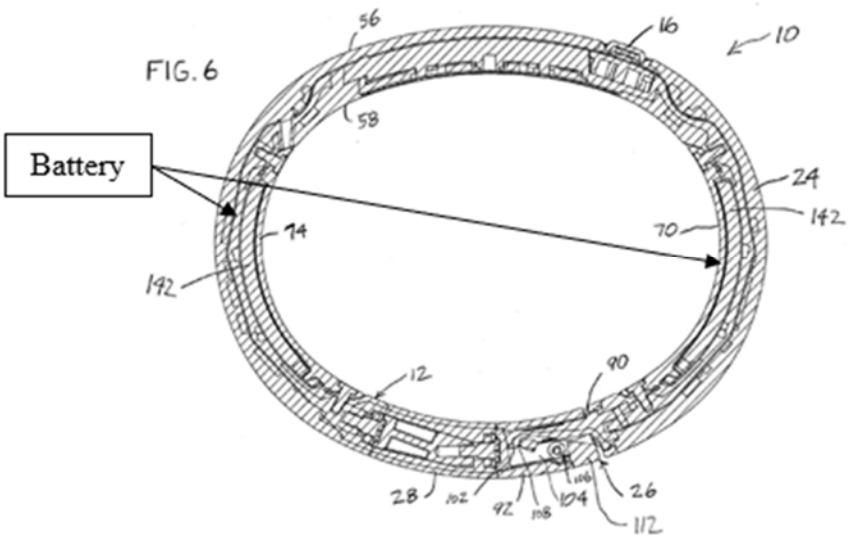

Henderson at FIG. 6 (annotations added). Moreover, the POSA understands that the Nike+ FuelBand is the real life embodiment of Henderson, which was filed by Nike. The Nike+ FuelBand was a product that had curved batteries and was released prior to 2013, as evidenced by this 2012 YoutTube teardown. RX-0032.

RX-0032 at 3:18, 3:56.

The ’178 Patent explains that the battery “can be any type of battery, such as a rechargeable battery. The battery can be a thin, flexible lithium ceramic chemistry battery. In another example, the battery can be a circular formed lithium polymer or lithium ion battery. The battery can provide power to any of the components described above. In one example, the battery can be a lithium cell integrated directly with the flexible PCB described above. Other implementations can integrated

the battery directly onto the housing to reduce the volume of 20 space taken up by battery packaging." '178 Patent at 15:12-21. These types of curved batteries disclosed in the '178 were within the POSA's knowledge as evidenced by: GMBPower batteries that were curved and commercially available. CX-1138.

GMBPower had a Lithium Polymer Battery for sale in on October 21, 2013, that "can be made at clients requirement." CX-1138. The battery was "[b]endable, rechargeable, thin, light, and with long shelf life." The smallest listed lithium curved battery for sale was 2.0 mm thick, 10 mm wide, and 21 mm long. The specification states that "By way of non-limiting example, the WCD interior diameter d1 (the diameter generally defining the ring size) can be in an approximate range of 12 mm to 24 mm so as to accommodate finger sizes ranging from a small child to a larger adult, and on any acceptable finger, including the thumb. The exterior diameter d2 can also be any reasonable size or shape, and can define an approximate range of between 18 mm and 30 mm. Likewise, the thickness between diameters dl and d2 can vary widely, but can typically reside in an approximate range of 1.5 mm to 3 mm. The width WR of the WCD along the direction of finger extension (finger longitudinal direction) is widely variable, and can be selected, in part to accommodate internal and external components. In a non-limiting example, the width WR is in a range of approximately 3 mm to 8 mm." '178 Patent at col. 17:4-18. Thus, GMBPow batteries were of the correct size to fit inside of finger-worn rings, including that of Asada, which is of approximate size to the rings described by the '178 patent because both are rings that need to fit on the finger. It would be obvious and easy to swap out Asada's battery to connect the GMBPow battery. The POSA would be motivated to use the GMBPow curved battery in Asada to increase the battery life of Asada's ring, improving convenience to the user. The POSA would have had reasonable success taking a commercially and widely available curved battery, which is the

appropriate size to fit within Asada, and placing it inside of Asada's housing. Asada already had components within its housing, so the POSA knew how to put components in there. The POSA would disconnect and remove Asada's top battery and replace it with one that fit within Asada's form factor to improve wearability, improved the consumer desirability, and increase device longevity.

5. Claim [1d]: Asada discloses: "a printed circuit board disposed between the internal housing component and the external housing component, wherein the printed circuit board extends through at least a second portion of the cavity of the finger-worn wearable ring device different from the first portion"

Claim 1 recites: "a printed circuit board disposed between the internal housing component and the external housing component, wherein the printed circuit board extends through at least a second portion of the cavity of the finger-worn wearable ring device different from the first portion." Mr. Alarcon will testify that Asada provides such a disclosure.

Specifically, Asada discloses that the Fig. 1 embodiment has a printed board disposed between the internal and external housing components: "[w]ith an appropriate threshold, the Sensor detecting the beat produces a pulse train of on-off Signals and the pulse-train is sent to a transmitter (not shown) contained within an electronics module 6 which, in a preferred embodiment, is realized as a flexible printed circuit board." RX-0010 at 3:42-46.

[redacted]

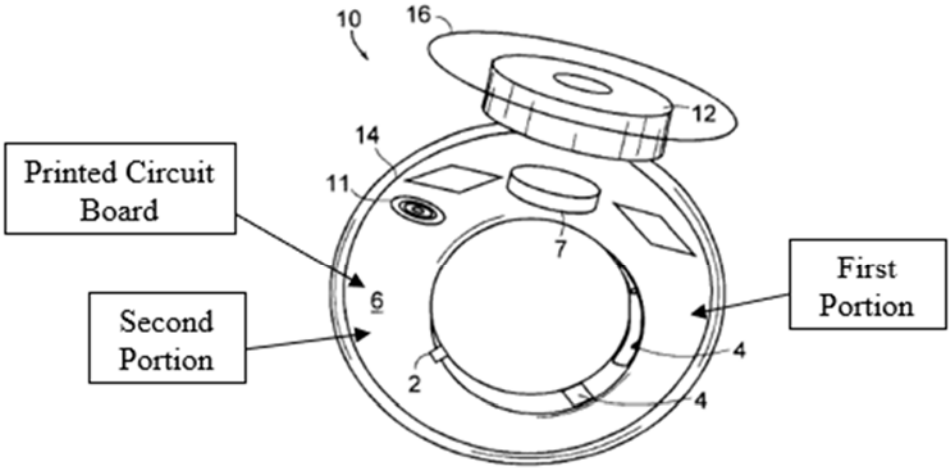

FIG. 1

RX-0010 at Fig. 1 (annotations added).

The printed circuit board is in a second portion of the cavity different from the first portion where the curved battery is located as modified because the two components are in different locations. It would be understood from Asada's disclosure that the inside of Asada's ring is hollow to accommodate the electrical components and wiring and thus the PCB is positioned in a second portion of the cavity inside of Asada. Even if Asada does not have a cavity inside of its ring, this would be a simple design change that would be obvious to try.

Yang discloses a ring sensor with a printed circuit board (CPU) positioned within a cavity formed between an internal housing component and an external housing component, and evidences the POSA's knowledge more than 15 years before the filing of the provisional application that led to the '178 patent.

[redacted]

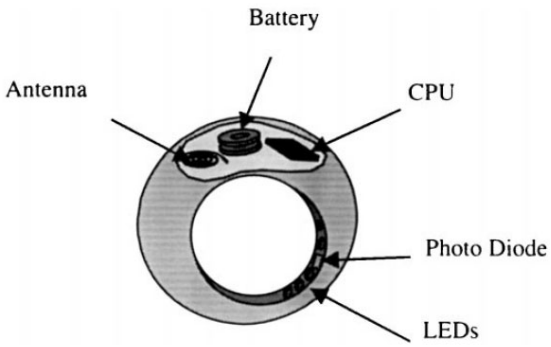

Fig. 1. Conceptual diagram of the ring sensor.

Yang at Fig. 1.

Webster and Wissmar also show a battery positioned in a different portion of a cavity than a printed circuit board. Webster at 5:8-12; Wissmar at Fig. 1, [0073].

To the extent that Asada does not explicitly disclose positioning its printed circuit board in a second portion of its cavity different from the first portion, the POSA would be motivated to modify Asada to meet this limitation so that the two components would not overlap and more space in the ring would be utilized. And ss evidenced by Yang and Wissmar, the POSA had knowledge to position the battery and printed circuit board in different portions of the cavity. Thus, doing so was obvious to the POSA. Oura admits that Asada discloses a printed circuit board. RFA 59 of 2024.08.06 Complainants' Supplemental Responses to Respondents' First Set of Requests for Admission.

6. Claim [1e]: Asada; Asada in view the POSA's knowledge; and Asada in combination with Other References discloses: "one or more sensors electrically coupled with the printed circuit board and the battery and configured to acquire data from the user through the internal housing component."

Claim 1 recites: "one or more sensors electrically coupled with the printed circuit board and the battery and configured to acquire data from the user through the internal housing component." Mr. Alarcon will testify that Asada provides such a disclosure.

[redacted]

Specifically, Asada discloses photo diodes and light-emitting diodes satisfy claim 1's "one or more sensors" limitation: "[a] simple finger ring sensor with a wireless transmitter has been designed to demonstrate the concept. As shown in FIG. 1, one or more photo diodes 2 and one or more light-emitting diodes (LEDs) 4 are imbedded in a ring 10 facing each other inside the ring. The LEDs may emit light in the visible or infrared, and may be particularly chosen to emit light at one or more specified wavelengths, such as the isobestic wavelength discussed below. The pulse of the patient may be detected as a periodic change in the sensor output. This ring may be placed on one of the fingers." RX-0010 at 3:28-37. The sensors acquire data from the user through the internal housing component because the sensors are embedded or recessed in the housing.

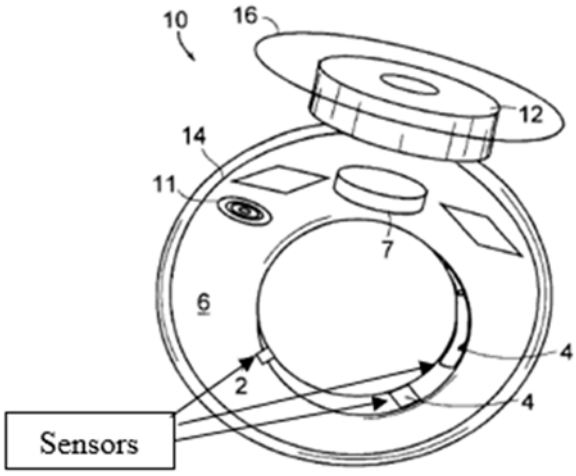

FIG. 1

RX-0010 at Fig. 1 (annotations added).

To the extent that this limitation is not literally disclosed, it is obvious over the POSA's knowledge. The POSA would be motivated to recess the sensors in the housing such that data is acquired through the internal housing component to provide a comfortable fit for the user and serve to protect the sensor components that could be damaged by the user. This would be a simple mechanical change.

Recessing sensors in the inner circumferential surface of electrical wearable ring devices was also already known in the art, as evidenced by Wissmar. Wissmar discloses a pressure sensor 8 which senses pressure "through an inlet hole shaped as a horn cone to maximize the pressure compression ratio at the pressure sensor end 11." Wissmar at [0073] and Fig. 3; see Wissmar at [0103]. Wissmar's pressure sensor 8 is also electrically coupled to a printable circuit board housed in a ring cavity. *Id.* Wissmar acknowledges that Wissmar's ring device could be used to track health benefits and use the pressure sensor to "provide a non-invasive measurement for changes in finger blood flow reflected by pulse wave amplitude (PWA). The end application used could be either be, for example, for medical, health, or dating purposes." Wissmar at [0103]. Thus, because Wissmar measures health data using a ring device, a POSA would have looked to Wissmar for a solution to implement sensors within an inner circumferential surface to maximize wearability of Asada's ring for the user.

The POSA understands that the LEDs 4 and photo diodes 5 (collectively, the "sensors" of claim 1) are connected to the printable circuit board 6 of Asada in Fig. 1 and the battery. Not only are the sensors close in proximity to the printable circuit board 6 according to Fig. 1, but a POSA would understand that Asada's sensors are electrically coupled to the printable circuit board 6 and the battery. Otherwise, Asada's sensors would not work. Asada teaches that "a pulse may be detected as a periodic change in the sensor output." RX-0010 at 3:35-36. Thus, A POSA would understand that a processor or controller must detect the change of the sensor output. And a POSA would understand that the processor or controller is electrically coupled to the printable circuit board 6 in Fig. 1 to detect the sensor output from the sensors that are also electrically connected to the printable circuit board 6.

[redacted]

7. Claim [2]: Asada in view of the POSA's knowledge discloses: "The finger-worn wearable ring device of claim 1, wherein the first portion of the cavity of the finger-worn wearable ring device is non-overlapping with the second portion of the cavity of the finger-worn wearable ring device."

Claim 2 recites: "The finger-worn wearable ring device of claim 1, wherein the first portion of the cavity of the finger-worn wearable ring device is non-overlapping with the second portion of the cavity of the finger-worn wearable ring device." Mr. Alarcon will testify that Asada in view of the POSA's knowledge provides such a disclosure.

As explained for claim 1, it would have been obvious to a POSA to place a battery in different portions of Asada's cavity or Asada-Wissmar's cavity. And it would have been obvious to a POSA that because the battery and PCB are in different portions of the same cavity, the battery and PCB are non-overlapping.

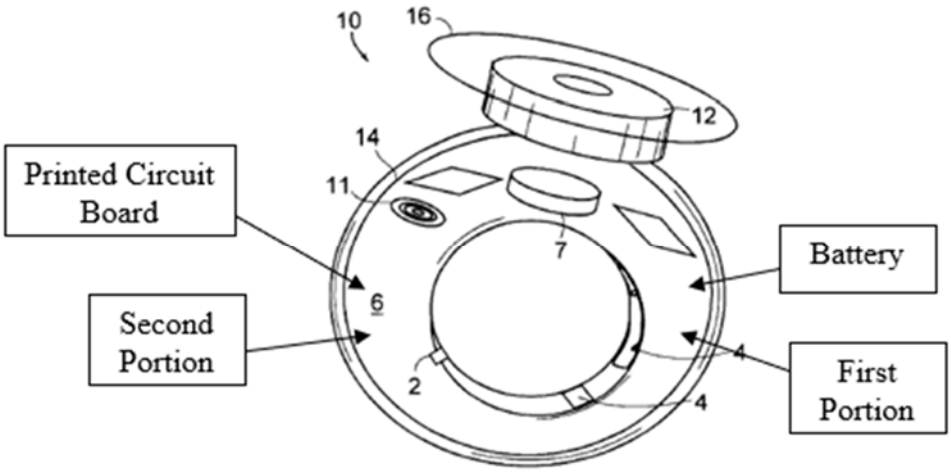

FIG. 1

RX-0010 at Fig. 1 (annotations added).

[redacted]

8. Claim [12]: Asada in view the POSA's knowledge; and Asada in combination with Other References: "The finger-worn wearable ring device of claim 1, wherein the battery comprises a curved battery, wherein an arc of the curved battery approximates a corresponding arc of the external housing component."

Claim 12 recites: "The finger-worn wearable ring device of claim 1, wherein the battery comprises a curved battery, wherein an arc of the curved battery approximates a corresponding arc of the external housing component." Mr. Alarcon will testify that Asada as modified with the POSA's knowledge and/or the Other References renders obvious this limitation as described above. When the curved battery known by the POSA is used instead of Asada's top battery, the battery comprises a curved battery, wherein an arc of the curved battery approximates a corresponding arc of the external housing component. This is so that the battery can be as large as possible inside of Asada's ring housing to maximize battery capacity while improving the user experience.

9. Claim [13]: Asada discloses: "The finger-worn wearable ring device of claim 1, wherein the one or more sensors comprise a first light-emitting component configured to emit light associated with a first wavelength, and a second light-emitting component configured to emit light associated with a second wavelength different from the first wavelength."

Claim 13 recites: "The finger-worn wearable ring device of claim 1, wherein the one or more sensors comprise a first light-emitting component configured to emit light associated with a first wavelength, and a second light-emitting component configured to emit light associated with a second wavelength different from the first wavelength." Mr. Alarcon will testify that Asada provides such a disclosure.

Asada discloses first and second light-emitting components. Specifically, Asada discloses that "[a]s shown in FIG. 1, one or more photo diodes 2 and one or more light-emitting diodes (LEDs) 4 are imbedded in a ring 10 facing each other inside the ring." And that "[t]he LEDs may

[redacted]

emit light in the visible or infrared, and may be particularly chosen to emit light at one or more specified wavelengths, such as the isobestic wavelength discussed below."

The light-emitting diodes 4 of Asada emit light at different wavelengths. And more specifically, one LED emits light associate at a first wavelength while a second LED emits light associated with a second wavelength. Asada discloses that the first wavelength is associated with visible light, and the second light is associated with infrared light. Asada discloses "The LEDs may emit light in the visible or infrared, and may be particularly chosen to emit light at one or more specified wavelengths, such as the isobestic wavelength discussed below." RX-0010 at Fig. 3:28-47.

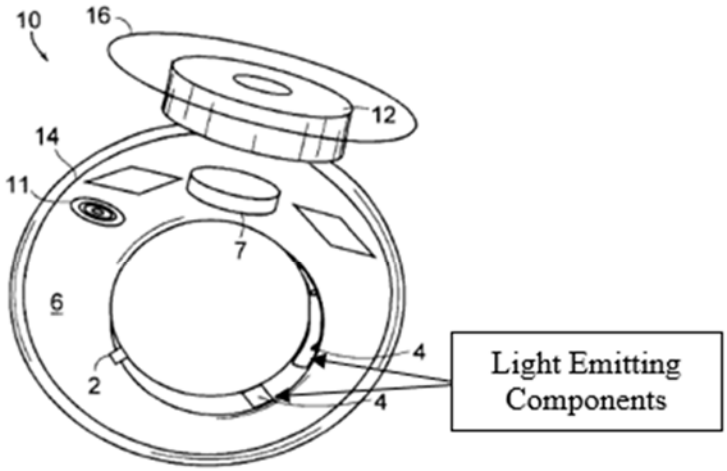

FIG. 1

RX-0010 at Fig. 1 (annotations added). Figure 4 also discloses photodiodes 42 and LEDs 44 on the interior and embedded into the ring shown in Figure 4.

10. Claim [14]: Asada discloses: "The finger-worn wearable ring device of claim 13, wherein the first wavelength is associated with visible light, and wherein the second wavelength is associated with infrared light."

Claim 14 recites: "[t]he finger-worn wearable ring device of claim 13, wherein the first wavelength is associated with visible light, and wherein the second wavelength is associated with

infrared light." Mr. Alarcon will testify that Asada provides such a disclosure. Asada discloses "The LEDs may emit light in the visible or infrared, and may be particularly chosen to emit light at one or more specified wavelengths, such as the isobestic wavelength discussed below." RX-0010 at Fig. 3:28-47.

As described above, Asada discloses "[t]he finger-worn wearable ring device of claim 13, wherein the first wavelength is associated with visible light, and wherein the second wavelength is associated with infrared light."

11. Claim [17]: Asada; Asada in view the POSA's knowledge; and Asada in combination with Other References: "The finger-worn wearable ring device of claim 1, wherein the external housing component and the internal housing component define the cavity configured to at least partially surround the battery, and the printed circuit board, wherein one of the external housing component or the internal housing component comprises: a first side wall and a second side wall that extend between the internal housing component and the external housing component, wherein the cavity is defined at least in part by the outer circumferential surface, the inner circumferential surface, the first side wall, and the second side wall."

Claim 17 recites: "The finger-worn wearable ring device of claim 1, wherein the external housing component and the internal housing component define the cavity configured to at least partially surround the battery, and the printed circuit board, wherein one of the external housing component or the internal housing component comprises: a first side wall and a second side wall that extend between the internal housing component and the external housing component, wherein the cavity is defined at least in part by the outer circumferential surface, the inner circumferential surface, the first side wall, and the second side wall." Mr. Alarcon will testify that Asada alone discloses or as modified by the POSA's knowledge renders obvious.

Asada's Fig. 1, as described above, discloses an internal housing component defining an inner circumferential surface coupled to an external housing component defining an outer circumferential surface and a cavity formed between the internal and external housing components.

The external housing component and the internal housing component define the cavity configured to at least partially surround the battery and the printed circuit board, as discussed with respect to claim 1. A POSA would further understand that either the housing component has a first side wall and a second side wall that that extends to the other housing component, as shown below. Also shown below is that the cavity from limitation 1[c] is formed between the housing components and the side walls.

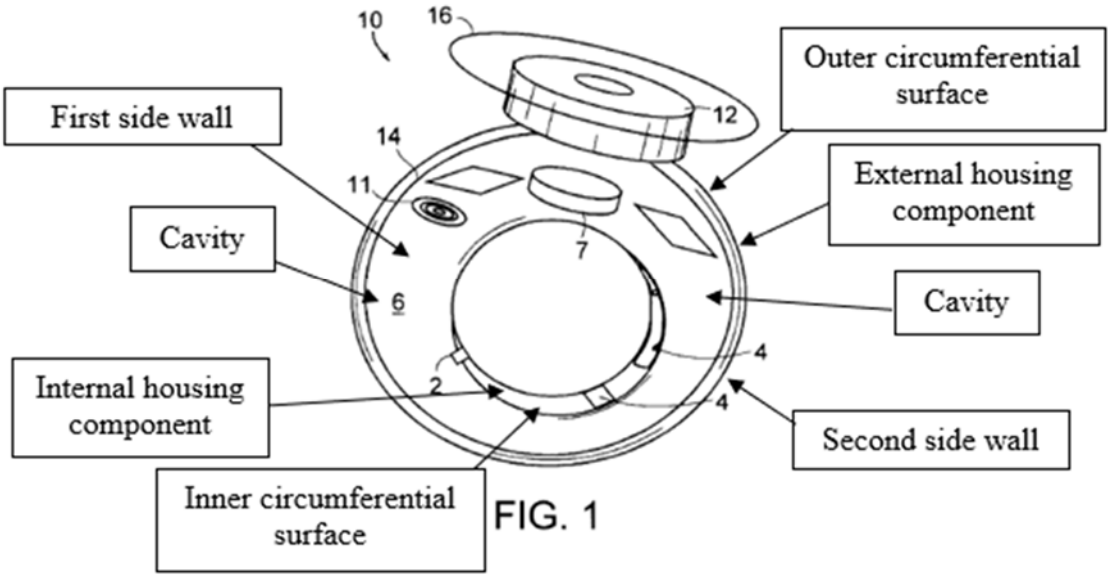

FIG. 1

RX-0010 at Fig. 1 (annotations added). The side walls are connected to the internal housing component and the external housing component and thus are considered as part of the internal housing component or the external housing component.

And to the extent Asada Fig. 1 does not meet the limitations of claim 1, then Fig. 1 as modified with the ring bodies of Fig. 4 described in Section VII.B.2 also discloses claim 17. One of the external and internal housing components of the Fig. 4 ring bodies have side walls that extend between the housing components.

[redacted]

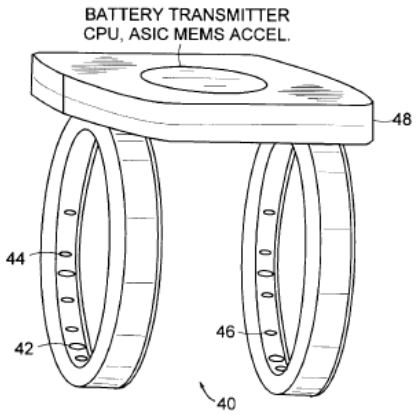

FIG. 4

RX-0010 at Fig. 4 (annotations added).

12. Claim [18]: Asada; Asada in view the POSA's knowledge; and Asada in combination with Other References discloses: "The finger-worn wearable ring device of claim 17, wherein the first side wall, the second side wall, or both, are substantially perpendicular to the inner circumferential surface, the outer circumferential surface, or both."

Claim 18 recites: "[t]he finger-worn wearable ring device of claim 17, wherein the first side wall, the second side wall, or both, are substantially perpendicular to the inner circumferential surface, the outer circumferential surface, or both." Mr. Alarcon will testify that Asada provides such a disclosure.

Asada's Fig. 1 discloses that the side walls described above are substantially perpendicular to the inner and outer circumferential surfaces, as shown below.

[redacted]

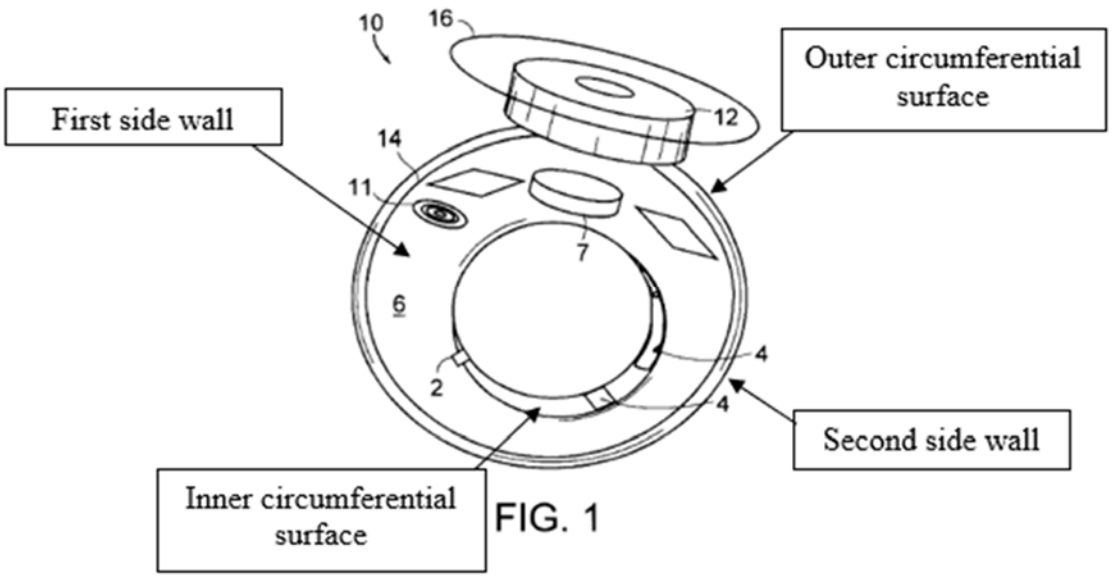

FIG. 1

RX-0010 at Fig. 1 (annotations added). Asada shows that its side walls are substantially perpendicular to the inner circumferential surface.

And to the extent required, the Fig. 1 embodiment modified to have the ring body structure of Fig. 4's side walls are also substantially perpendicular to the inner and outer circumferential surfaces.

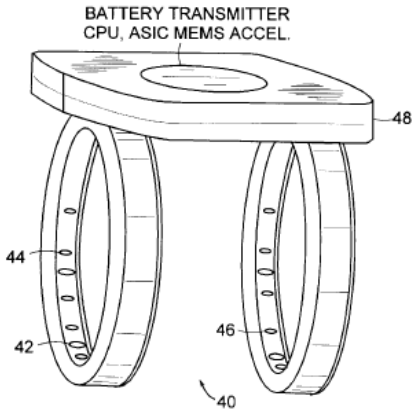

FIG. 4

RX-0010 at Fig. 4.

And to the extent required, either embodiment above having separate housing components would not affect whether the side walls are substantially perpendicular to the inner and outer circumferential surfaces.

F. Babashan Anticipates; Babashan Renders Obvious in view of Other References; and Babashan Renders Obvious in view of the POSA's knowledge the Asserted Claims

1. Claim [1-pre]: Babashan discloses "[a] finger-worn wearable ring device, comprising:"

The preamble of claim 1 recites: "[a] finger-worn wearable ring device, comprising." The ALJ has adopted that the preamble is limiting. Mr. Alarcon will testify that Babashan provides such a disclosure.

For example, Babashan discloses a finger-worn wearable ring device. Specifically Babashan discloses: "FIG. 6H is a three dimensional view of the heart rate monitor 600 embodiment. The casing 621 of the heart rate monitor 600 may be in the shape of a bracelet. This casing 621 may house the display units 601, the user input device 622 (not shown), the sensors assembly 603, the microcontroller 20 (as illustrated in FIG. 1) and the power generating device 627. The casing 621 of the heart rate monitor 600 may have many different designs. It may be designed to be worn on different body parts, such as wrists, fingers, ears, neck, chest or ankles." RX-0014 at [0086]; *see also id.* at claims and Fig. 6H below.

[redacted]

Fig. 6H

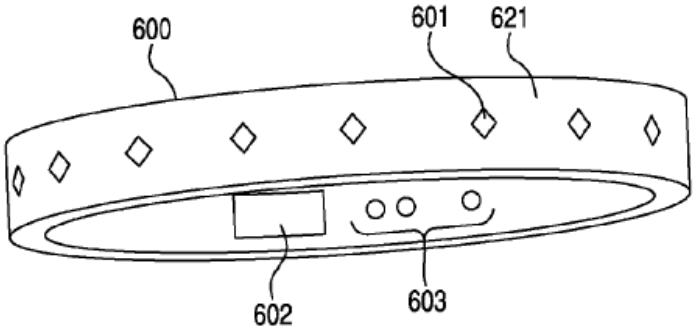

Babashan also states, "[t]he light emitter and photo detector are typically placed on either side of a thin part of the patient's anatomy, usually a fingertip or earlobe, or in the case of a neonate, across a foot, and a light containing both red and infrared wavelengths is passed from one side to the other." RX-0014 at [0002].

Moreover, Babashan teaches, "[a] device for monitoring body physiology parameters, comprising: a casing," wherein "the casing is selected from a group consisting of a bracelet, finger ring, necklace, glasses, chest strap and anklet." RX-0014 cls. 1, 16; *see also id.* at cls. 17, 18, 38. Oura's expert, Dr. Rosing, concedes these points. Indeed, she concedes that Babashan discloses a heart rate monitor that may be put in a casing that can fit on a finger. RX-0319C.34 at 130:12-20 (discussing RX-0014 at [0086]); *see also* RX-0319C at 133:9-24. And she also concedes that Babashan expressly uses the word "finger ring" to describe its casing. *See id.* at 140:10-141:7.

In addition, the '178 Patent discloses that the components in the finger-worn device of the '178 Patent were transferable to wrist and arm form factors, demonstrating the analogous nature between wrist and ring wearable technology. For example, the '178 Patent states "[a]lthough the WCD of the present disclosure is depicted as a ring that can be worn on the finger of a user, other shapes, designs, and form factors can be utilized for the WCD. For example, the WCD can be in the form of a wrist band, bracelet, necklace, earring, or any other type of wearable accessory. In

this regard, references to the finger of a user in the present application can be considered to apply to other portions of a human body depending on the form of the WCD, such as wrist, neck, ear, etc." JX-0001 at 8:66-9:7. Notably, as Dr. Rosing also acknowledges, Babashan similarly discloses "that the casing 621 of the heart rate monitor may have many different designs," including so that it may be worn on different body parts, such as wrists or fingers. RX-0014 at [0086]; *Id.* 128:18-129:1. Thus, at minimum, a POSITA would have found it obvious to make the casing of the heart rate monitor disclosed in Babashan into a wearable ring device.

In that regard, Oura's expert, Dr. Rosing, disagrees that "Babashan's statement that the bracelet device disclosed therein may be 'designed to be worn on different body parts, such as wrists, fingers, ears, neck, chest, or ankles'" is evidence that the device discloses a finger worn wearable ring device. (*See* RX-0411C at ¶¶117, 118, 203-205). But Dr. Rosing concedes that "Babashan discloses . . . a heart-rate monitor [that] may be put in a casing that can fit on a finger." (RX-0411C ¶ 203.) And, as noted, Dr. Rosing has also expressly conceded that Babashan discloses its casing may be in the form of a finger ring. *See* 0319C.34 at 140:10-141:7. Thus, a POSITA would understand that Babashan discloses a finger-worn wearable device.

2. Claim [1a]: Babashan discloses "an external housing component defining an outer circumferential surface of the finger-worn wearable ring device;"

Claim 1 recites "an external housing component defining an outer circumferential surface of the finger-worn wearable ring device." Mr. Alarcon will testify that Babashan provides such a disclosure.

Babashan discloses an external housing component defining an outer circumferential surface of the finger-worn wearable ring device. For example, Babashan discloses that the heart rate monitor device 600 includes a casing 621 with a top surface 613, a bottom surface 614, and a side surface 629. RX-0014 at [0073] and Fig. 6A shown below.

[redacted]

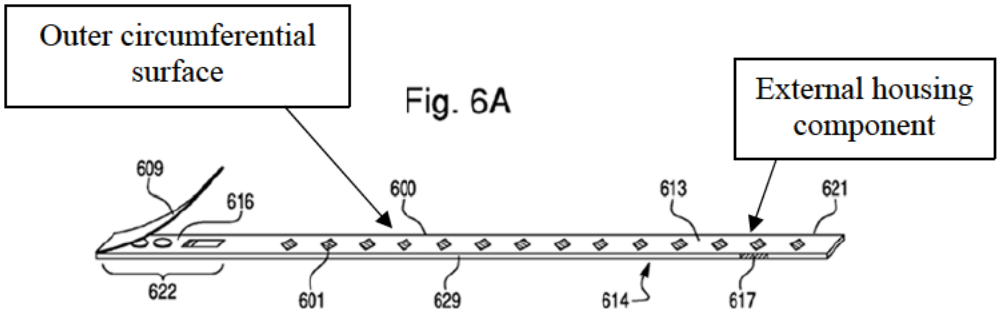

RX-0014 at Fig. 6H (annotated).

Oura's expert, Dr. Rosing, has conceded the same. *See* RX-0319C at 146:12-19, 147:2-11.

Further, Babashan discloses, "FIG. 6H is a three dimensional view of the heart rate monitor 600 embodiment. The casing 621 of the heart rate monitor 600 may be in the shape of a bracelet. This casing 621 may house the display units 601, the user input device 622 (not shown), the sensors assembly 603, the microcontroller 20 (as illustrated in FIG. 1) and the power generating device 627. The casing 621 of the heart rate monitor 600 may have many different designs. It may be designed to be worn on different body parts, such as wrists, fingers, ears, neck, chest or ankles." RX-0014 at [0086] and Figure 6H below. Babashan's internal and housing components enclose the space within the ring to house the components.

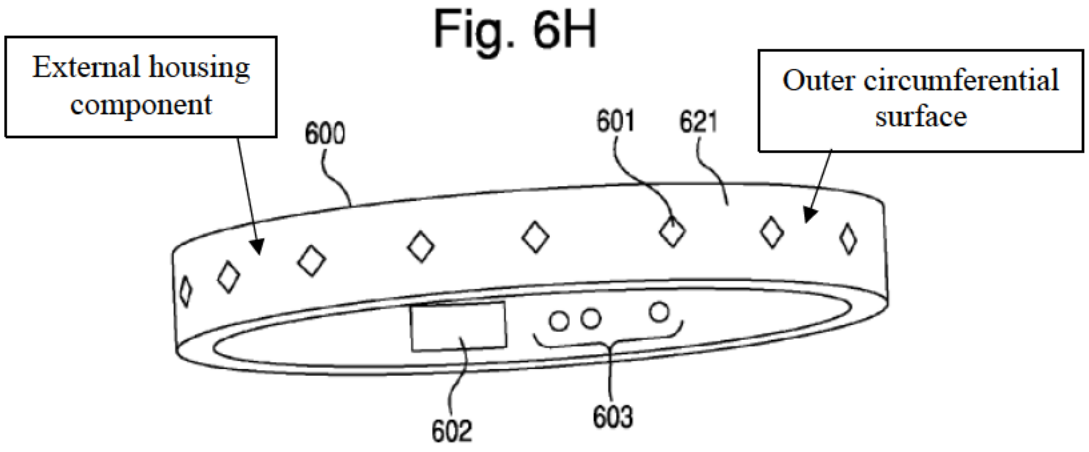

RX-0014 at Fig. 6H (annotated).

Fig. 6H further discloses an internal structure that encloses space defining an inner circumferential surface, and an external structure that encloses space defining an outer circumferential surface. The internal and external structures are connected by a first side wall (bottom surface of casing 600 in Fig. 6H) and a second side wall (top surface of casing 600 in Fig. 6H). Babashan's external housing component is a structure that encloses space. Babashan's external housing component is a structure that encloses space, as construed by the ALJ Accordingly, Babashan discloses this limitation.

3. Claim [1b]: Babashan discloses "an internal housing component defining an inner circumferential surface of the finger-worn wearable ring device, the internal housing component coupled with the external housing component, wherein at least a portion of the inner circumferential surface of the internal housing component is configured to contact a tissue of a user when the finger-worn wearable ring device is being worn by the user;"

Claim 1 recites "an internal housing component defining an inner circumferential surface of the finger-worn wearable ring device, the internal housing component coupled with the external housing component, wherein at least a portion of the inner circumferential surface of the internal housing component is configured to contact a tissue of a user when the finger-worn wearable ring device is being worn by the user." Mr. Alarcon will testify that Babashan provides such a disclosure.

Babashan discloses "FIGS. 6A illustrates the top view of an exemplary embodiment of a portable heart rate monitor 600 which can be worn on the wrist as a bracelet. This heart rate monitor 600 may include a casing 621 with a top surface 613, a bottom surface 614 and a side surface 629. The top surface 613 of the heart rate monitor 600, as shown in FIG. 6A, may include display units 601 and a compartment 616 which houses a user input device 622. The side surface 629 may include an input/output port 617." RX-0014 at [0073].

[redacted]

For example, "FIG. 6H is a three dimensional view of the heart rate monitor 600 embodiment. The casing 621 of the heart rate monitor 600 may be in the shape of a bracelet. This casing 621 may house the display units 601, the user input device 622 (not shown), the sensors assembly 603, the microcontroller 20 (as illustrated in Fig. 1) and the power generating device 627. The casing 621 of the heart rate monitor 600 may have many different designs. It may be designed to be worn on different body parts, such as wrists, fingers, ears, neck, chest or ankles." Babashan's internal housing component is shown below, at [0086] and Fig. 6H.

Fig. 6H

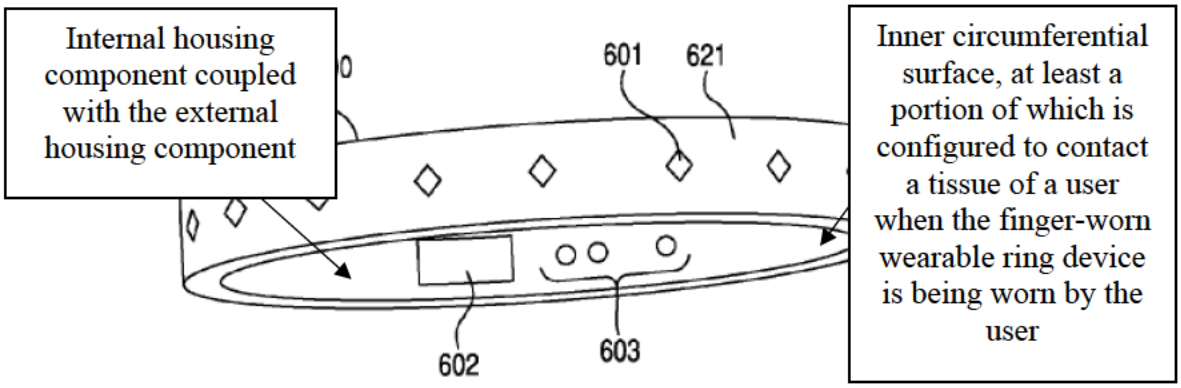

RX-0014 at Fig. 6H (annotated).

Babashan also specifically teaches an inner housing component that is configured to contact a tissue of a user. For example, Babashan's "sensor assembly 603" can be "positioned on the bottom surface 614 of the heart rate monitor 600" so that "the sensor assembly 603 . . . will come in contact with that body structure." RX-0014 at [0087]. Skin contact is important because the sensor is used to "detect[] physiological parameters and sends the collected data to the microcontroller 20 (illustrated in FIG. 1) for processing." RX-0014 at [0087].

Babashan's internal housing component is a structure that encloses space. Accordingly, Babashan discloses this limitation as construed by the ALJ.

Moreover, Fig. 6H discloses an internal structure that encloses space defining an inner circumferential surface, and an external structure that encloses space defining an outer circumferential surface. The internal and external structures are coupled because they are connected by a first side wall (bottom surface of casing 600) and a second side wall (top surface of casing 600). The external housing component is a different structure than the internal housing component because the external housing component defines the outer circumferential surface and the internal housing component defines the inner circumferential surface. (*See e.g*, JX-0001 at Figs 4, 6,16, and corresponding text.) A POSA would know how to incorporate the claimed components into Babashan's housing as shown, for example, by Schröder.

4. Claim [1c]: Babashan; Babashan in combination Wissmar; and Babashan in view of the POSA's knowledge discloses "a battery positioned within a cavity formed between the internal housing component and the external housing component, wherein the battery comprises a shape and size configured to fit within the cavity between the outer circumferential surface of the external housing component and the inner circumferential surface of the internal housing component, and wherein the battery extends through at least a first portion of the cavity of the finger-worn wearable ring device;"

Claim 1 recites "a battery positioned within a cavity formed between the internal housing component and the external housing component, wherein the battery comprises a shape and size configured to fit within the cavity between the outer circumferential surface of the external housing component and the inner circumferential surface of the internal housing component, and wherein the battery extends through at least a first portion of the cavity of the finger-worn wearable ring device." Mr. Alarcon will testify that Babashan indeed provides such a disclosure. Mr. Alarcon will also testify that Babashan in view of the POSA's knowledge; and Babashan in view of Wissmar discloses this limitation. The motivations to combine and expectations of success (described below) would have been the same for either modification and result in the same modification.

[redacted]

For example, "FIG. 6F illustrates the bottom view of the portable heart rate monitor 600. On its bottom surface 614, the heart rate monitor 600 may include a sensor assembly 603 for monitoring physiological parameters, and a compartment 602 for storing power generating devices 627, such as a battery. FIG. 6G, illustrates a detailed view of an exemplary heart rate monitor 600 embodiment which may include a compartment 602 on its bottom surface 614. This compartment 602 may allow for installing or storing power generating devices 627, such as a battery. This compartment 602 may be covered by a lid 602A to secure the power generating device 627." RX-0014 at [0085].

Moreover, Babashan discloses "FIG. 6H is a three dimensional view of the heart rate monitor 600 embodiment. The casing 621 of the heart rate monitor 600 may be in the shape of a bracelet. This casing 621 may house the display units 601, the user input device 622 (not shown), the sensors assembly 603, the microcontroller 20 (as illustrated in FIG. 1) and the power generating device 627. The casing 621 of the heart rate monitor 600 may have many different designs. It may be designed to be worn on different body parts, such as wrists, fingers, ears, neck, chest or ankles." RX-0014 at [0086]; *see also id.* at Figs. 6H and 6F as annotated below.

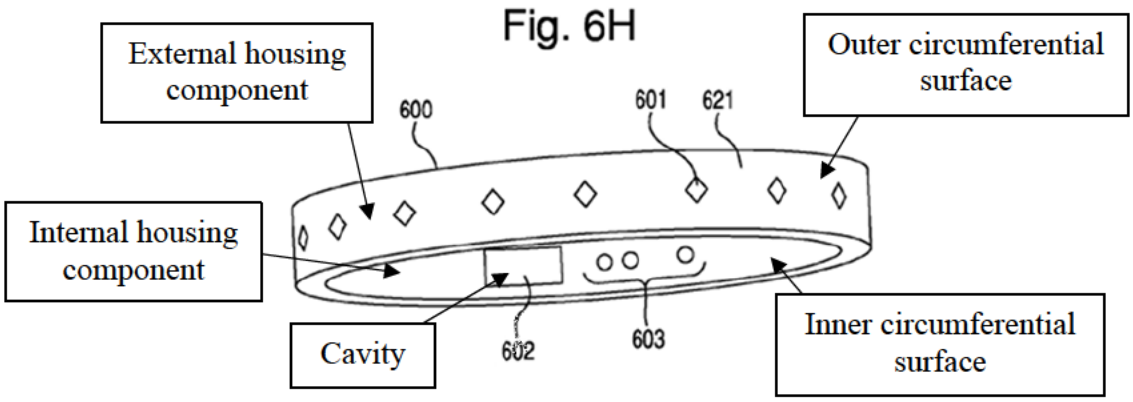

Battery comprises a shape and size configured to fit within the cavity

[redacted]

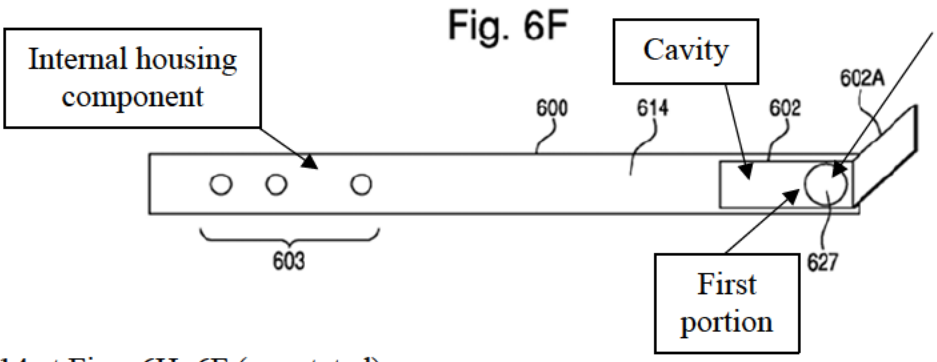

RX-0014 at Figs. 6H, 6F (annotated).

According to Babashan, compartment 602 can be covered by lid 602A. RX-0014 at [0085]. A POSITA would understand that the lid 602A is part of the internal housing component because it defines part of the inner circumferential surface when closed. A POSITA would also understand that the bottom part of the compartment 602 is part of the external housing component. Notably, Oura admits that Babashan discloses "a battery" and "a battery positioned within a compartment." RX-0326.317-20 at RFA Nos. 560 and 565. Oura's expert, Dr. Rosing, testified the same. RX-319C at 149:1-7.

A POSITA would understand that there is a cavity between the internal housing component and the external housing component outside of the compartment of Babashan because Babashan places components inside the ring and Babashan does not disclose that it has material other than the components in the ring. A POSITA would also understand that, in view of Figs. 6A-6I and Babashan's corresponding disclosure, there is a cavity that exists independent of the ring and components. To the extent that Babashan does not explicitly disclose a cavity, the inclusion and use of a cavity between housing components for receiving internal components was well known prior to November 2013, as evidenced by at least Wissmar. *See, e.g.*, Wissmar at Fig. 1.

For example, a POSITA would have been motivated to manufacture Babashan to include a cavity that exists independent of the components, as disclosed by Wissmar, for ease of manufacturing of Babashan. A POSITA would have also had a reasonable expectation of success

[redacted]

in making any such modification at least in view of the prior art's teachings, such as in Wissmar, that, "as is readily appreciated by a person skilled in the art," many embodiments of such wearable electronic devices "are equally possible within the scope of the invention. *See, e.g.*, RX-0016 at [0096]. In any event, having a cavity in between internal and external housing components was obvious to the person having ordinary skill in the art, and a POSITA would understand it to be a simple design change that would be obvious to try.

5. Claim [1d]: Babashan; and Babashan in view of the POSA's knowledge discloses: "a printed circuit board disposed between the internal housing component and the external housing component, wherein the printed circuit board extends through at least a second portion of the cavity of the finger-worn wearable ring device different from the first portion; and"

Claim 1 recites "a printed circuit board disposed between the internal housing component and the external housing component, wherein the printed circuit board extends through at least a second portion of the cavity of the finger-worn wearable ring device different from the first portion." Mr. Alarcon will testify that Babashan provides such a disclosure. Mr. Alarcon will also testify that Babashan alone and Babashan as modified in limitation 1[c] discloses this limitation. Babashan alone and Babashan as modified in limitation 1[c] would have had the same motivations to combine and expectations of success (described below).

For example, Babashan discloses a circuit disposed between the internal housing component and the external housing component, wherein the circuit extends through at least a second portion of the cavity of the finger-worn wearable ring device different from the first portion, and appears to disclose a printed circuit board 900 disposed within between the inner housing component and the external housing component. To the extent Babashan does not disclose a printed circuit board, these features would have been obvious in view of the POSITA's knowledge or one of the references below.

[redacted]

For example, Babashan discloses that "FIG. 6F illustrates the bottom view of the portable heart rate monitor 600. On its bottom surface 614, the heart rate monitor 600 may include a sensor assembly 603 for monitoring physiological parameters, and a compartment 602 for storing power generating devices 627, such as a battery. FIG. 6G, illustrates a detailed view of an exemplary heart rate monitor 600 embodiment which may include a compartment 602 on its bottom surface 614. This compartment 602 may allow for installing or storing power generating devices 627, such as a battery. This compartment 602 may be covered by a lid 602A to secure the power generating device 627." RX-0014 at [0085]; *see also id.* at Fig. 6H below.

Fig. 6H

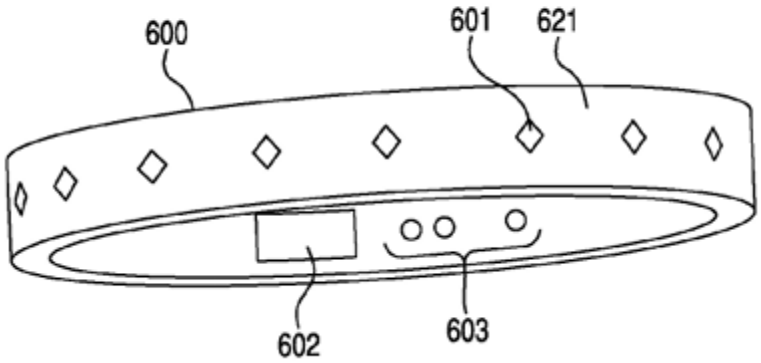

RX-0014 at Fig. 6H.

Babashan further discloses that "FIG. 9 illustrates an example of a circuit 900. This circuit 900 connects the heart rate sensor assembly 901 to a microcontroller 20. Through this connection, detected data, such as base heart rate, may be communicated from the heart rate sensor assembly 901 to the microcontroller 20 for processing and shown to the user through the illumination color light source display 906. Microcontroller 20 may comprise a application specific integrated circuit (ASIC) or a programmable integrated circuit (PIC) which is specifically designed to control the

[redacted]

illumination source display 306. The microcontroller 20 may be programmed to display the spectrum of colors through a blend of three primary color sources as described in more detail below. The circuit 900 may also optionally include illumination color light sources 903 and 904." RX-0014 at [0103]; *see also* Fig. 9 below:

Fig. 9

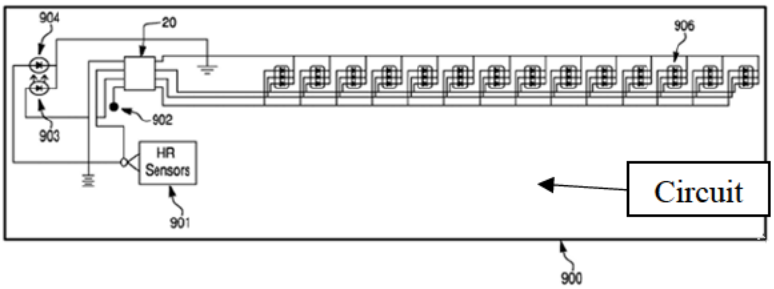

RX-0014 at Fig. 9 (annotated).

A POSITA would understand that Babashan discloses a printed circuit board disposed between the internal housing component and the external housing component because the circuit connects the sensor assembly 901 with the microcontroller and is not visible outside of the device. A POSITA would understand from Babashan's disclosure that the printed circuit board is disposed within the housing because it connects the sensor assembly with the microcontroller, battery, color light sources, and other components which are all disposed within or located on the housing. Babashan states "FIG. 9 is a circuit diagram illustrating an exemplary circuit of an embodiment" and is laid out in a similar manner to a printed circuit board. RX-0014 at [0043] and Fig. 9. A POSITA understands that ASIC and PIC chips are not used in isolation but are typically mounted in use to a circuit board such as a printed circuit board.

Furthermore, a POSITA would understand that the compartment 602 has space to receive a printed circuit board based at least on Fig. 6G.

[redacted]

Fig. 6G

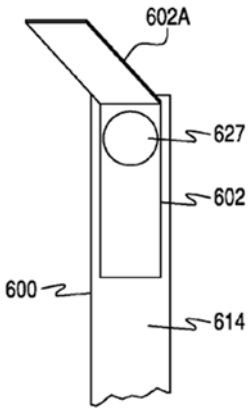

RX-0014 at Fig. 6G.

A POSITA would thus also understand that Babashan's printed circuit board "extends through at least a second portion of the cavity of the finger-worn wearable ring device different from the first portion" because the battery and PCB exist inside the ring, are located in different positions, and would be placed near the controls and battery, so the second portion where the printed circuit board is located is different from the first portion of the cavity. To the extent that Babashan does not explicitly disclose that its PCB is in the compartment, placing it there would be an obvious choice for its location. A POSITA would have been motivated to do so such that the PCB is close to the other electronic controls and battery, which would save on manufacturing cost.

Likewise, Fig. 6C discloses user input components and a display that "communicates the inputted information to the microcontroller 20." RX-0014 at [0077]. Accordingly, the microcontroller would be near the components illustrated in Fig. 6C, further indicating the printed circuit board is in the compartment next to the battery and between the internal and external housing components. *See* RX-0014 Fig. 6C. Thus, the PCB is in a different portion of the cavity than the battery. Adjusting the compartment for components would be a simple mechanical change

[redacted]

and the POSITA would be motivated to adjust the compartment to fit the components to make the ring work.

Fig. 6C

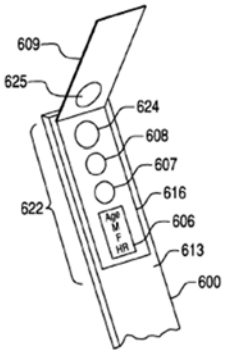

RX-0014 at Fig. 6C.

To the extent this limitation is not explicitly disclosed by Babashan, it is obvious over Babashan in view of the POSITA's knowledge and/or the references discussed below.

- Printed circuit boards have been used in electronics since at least the 1930's. https://en.wikipedia.org/wiki/Printed_circuit_board.
- Asada discloses a patient monitoring finger ring sensor that monitors biometrics of a patient using LEDs and photodiodes in the same/similar manner as Babashan. RX-0010 at 3:28-47. Asada includes "a flexible printed circuit board" inside of its housing that connects to the sensors, processes the biometric information, and transfers the data to the transmitter. *Id*. Asada's flexible printed circuit board is in a second portion of a cavity inside of its housing different from the battery. RX-0010 at Fig. 1.
- Niwa teaches using printed circuit board or substrate 11 to which light sensor 12, amplifier circuit 14, and the processing circuit 15 are equipped to either the

[redacted]

surface or the back side of substrate 11 directly, and that substrate is disposed between the internal housing component and the external housing component. RX-0015 at [0208], Figs. 24-28. Niwa's printed circuit board 11 is in a different portion of the cavity than the battery 24. *Id.* at [0208], [0213], Figs. 24-28. The POSITA understands that the substrate is a printed circuit board because the substrate's "electrical connection is established between the surface and back side of the substrate 11 by means of a through hole and a via hole," to connect the light sensor 12, the amplifier 14, and the processing circuit 15. *Id.* at [0208], Figs. 24-28.

- Armstrong discloses that "logic circuits" in a wearable computing device "may be printed circuit boards (PCB's)" and located within the housing. RX-0017 at [0008], Figs. 1-2. Armstrong states that its PCB and battery are in different portions of a cavity: "The battery 230 and logic circuits 240 are enclosed inside of the casing 250." *Id.* at [0018].

Mr. Alarcon will testify that a POSITA would be motivated to use a printed circuit board disposed between the internal housing component and the external housing component, wherein the printed circuit board extends through at least a second portion of the cavity of the finger-worn wearable ring device different from the first portion, because a PCB is an easy, cheap, and convenient manner to connect the microcontroller, sensor assembly, battery, and color light sources, while increasing reliability of the device. A POSITA had a reasonable expectation of success incorporating the circuit of Babashan as printed circuit board because they were routinely used in the art and used in finger-worn sensor devices since at least 1997, as evidenced by Asada. Furthermore, Mr. Alarcon will testify that configuring the heart rate monitor of Babashan such that

the microcontroller and the application specific integrated circuit (ASIC) are mounted on the PCB is also a combination of previously known elements that would have yielded predictable results. Accordingly, Mr. Alarcon will show that element [1d] is taught by or obvious in view of Babashan.

Dr. Rosing disagrees with Mr. Alarcon and opines that Babashan does not disclose a printed circuit board nor a location of a circuit, and that Mr. Alarcon's reference to Asada, Niwa, and Armstrong for support for a printed circuit board in a cavity is misplaced (*See* RX-0411C at ¶¶218-228). However, a POSITA would have found it obvious to provide a printed circuit board in a cavity, as recited in element [1d], for the reasons discussed. Moreover, a POSITA would have recognized that there are only a limited number of ways to arrange electronic elements inside a finger-worn wearable ring device. Thus, a POSITA would have found it obvious to locate a printed circuit board inside a cavity of the ring device in a different portion of the cavity than the battery.

Indeed, this is further evidenced by the a POSITA's knowledge in the art, as evidenced, for example, by Wissmar. Indeed, as Wissmar discloses, wearable electronic devices, such as finger rings, could comprise "electronic components packaged and ***integrated in different ways*** . . . ***dependent on its application***." RX-0016 at Abstract (emphasis added). Indeed, Wissmar teaches that "the set of electronic and/or electromechanical components integrated" in its wearable electronic device "may be easily adapted to the intended use of the ring," and further teaches a wide breadth of applications for the ring. *Id.* at [0106], [0040]. Thus, to the extent any further modification of Babashan is needed to arrive at the claimed invention, a person of ordinary skill in the art would be motivated to do so with a reasonable expectation of success.

[redacted]

6. Claim [1e]: Babashan; and Babashan in view of the POSA's knowledge discloses "one or more sensors electrically coupled with the printed circuit board and the battery and configured to acquire data from the user through the internal housing component."

Claim 1 recites "one or more sensors electrically coupled with the printed circuit board and the battery and configured to acquire data from the user through the internal housing component." Mr. Alarcon will testify that Babashan provides such a disclosure. Mr. Alarcon will also testify that Babashan in view of the POSA's knowledge discloses this limitation. Mr. Alarcon will also testify that the motivations and expectations of success (described below) would have been the same for all permutations of combinations.

For example, Babashan discloses "[i]n an exemplary embodiment, FIG. 6[I] illustrates a sensor assembly 603 positioned on the bottom surface 614 of the heart rate monitor 600. When the heart rate monitor 600 is placed around a body structure, the sensor assembly 603 which is on the bottom surface 614 of the heart rate monitor 600 will come in contact with that body structure. The sensor assembly 603 detects physiological parameters and sends the collected data to the microcontroller 20 (illustrated in FIG. 1) for processing. The processed data will in turn be displayed by the display units 601." RX-0014 at [0087] and annotated Fig. 6H below.

Fig. 6H

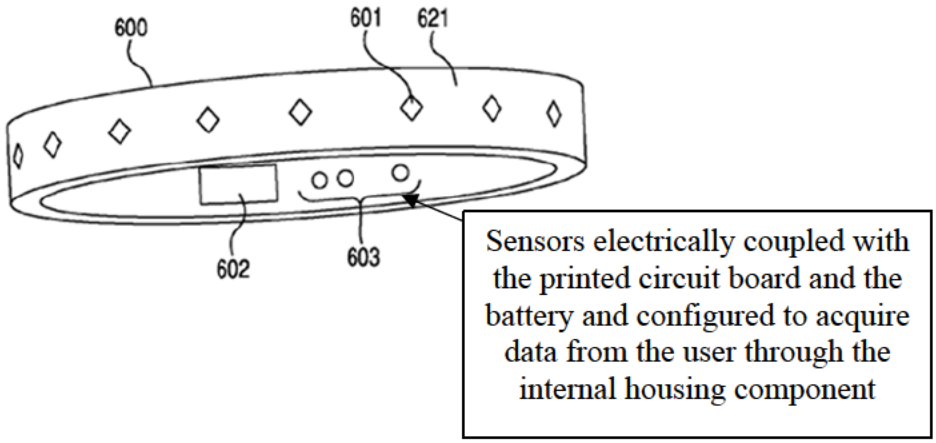

[redacted]

RX-0014 at Fig. 6H (annotated).

"These sensor assemblies 603 and 603A in combination may include two photo detectors 800 and 800A, an emitter 801, such as an edge emitter LED, and an emitter 802, such as a surface emitter LED. The emitter 801 may function in transmission mode and transmit light 805 through an anatomical structure to the photo detector 800. The emitter 802 may function in reflectance mode and transmit light 804 to a photo detector 800A by reflecting the light 804 through the tissue of an anatomical structure, such as a wrist 803. The data received by the photo detectors 800 and 800A is also communicated to the microcontroller 20 (illustrated in FIG. 1) where it is processed and subsequently displayed on the display units 601 (illustrated in FIG. 6A). The emitters 801 and 802 may each emit light in different wavelengths. For example, each emitter may emit light at about 910 nm and/or 660 nm wavelengths." RX-0014 at [0095]; *see also* Fig. 8B.

Fig. 8B

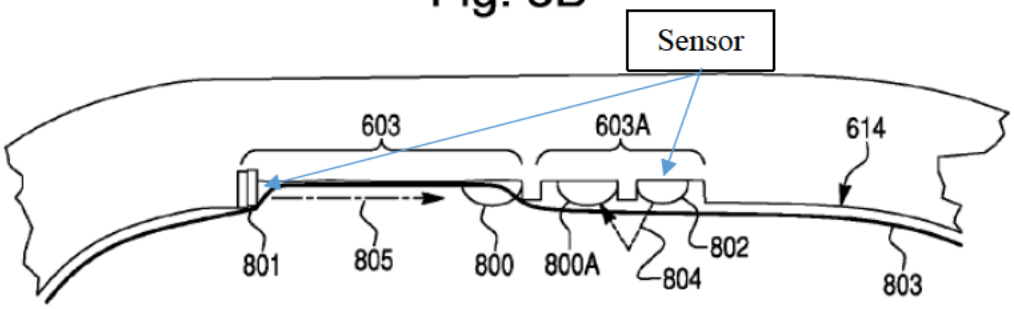

RX-0014 at Fig. 8B.

A POSITA would understand that the sensors acquire data from the user through the internal housing component because there is a window cut out of Babashan's internal housing component and data is acquired through that window in the same manner as described in the '178 patent specification. *See e.g.,* JX-0001 at 9:60-63; 17:63-18:9; 20:35-41.

"FIG. 6F illustrates the bottom view of the portable heart rate monitor 600. On its bottom surface 614, the heart rate monitor 600 may include a sensor assembly 603 for monitoring

[redacted]

physiological parameters, and a compartment 602 for storing power generating devices 627, such as a battery. FIG. 6G, illustrates a detailed view of an exemplary heart rate monitor 600 embodiment which may include a compartment 602 on its bottom surface 614. This compartment 602 may allow for installing or storing power generating devices 627, such as a battery. This compartment 602 may be covered by a lid 602A to secure the power generating device 627." RX-0014 at [0085]. Oura admits that Babashan discloses "one or more sensors" and "one or more LEDs." RX-0326 at RFA Nos. 588 and 589. *See also* RX-0319C at 139:16-140:9.

"FIG. 9 illustrates an example of a circuit 900. This circuit 900 connects the heart rate sensor assembly 901 to a microcontroller 20. Through this connection, detected data, such as base heart rate, may be communicated from the heart rate sensor assembly 901 to the microcontroller 20 for processing and shown to the user through the illumination color light source display 906. Microcontroller 20 may comprise a application specific integrated circuit (ASIC) or a programmable integrated circuit (PIC) which is specifically designed to control the illumination source display 306." RX-0014 at [0103]; Fig. 9. A POSITA would understand that Babashan's sensors are electrically coupled to the printable circuit board and the battery, otherwise Babashan's sensors would not work.

Fig. 9

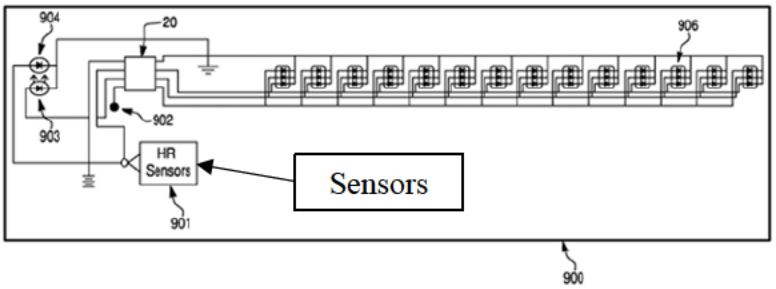

RX-0014 at Fig. 9 (annotated).

Babashan's components are recessed and have a window in the internal housing component in the same manner as the '178 Patent such that the data is acquired through the internal housing component. JX-0001.0076 at 16:22-42, Fig. 4. To the extent Babashan does not disclose sensors acquiring data through the internal housing component 614, it would be obvious to recess the sensors into the internal surface of Babashan so the sensors acquire data through a window of the internal housing component. A POSITA would be motivated to recess the sensors to increase the wearability of the ring and to protect the sensors 603 and 603A. Sensing data through windows of internal structures was within the POSITA's knowledge as evidenced by Niwa and Wissmar. *See* RX-0015 at Fig. 27, RX-0016 at Fig. 1.

Dr. Rosing takes the position that Babashan does not disclose or suggest element [1e], and that Mr. Alarcon's comments regarding the placement of the sensors in Babashan's device is misplaced. *See*, RX-0411C at ¶¶229-234. But Dr. Rosing ignores that Babashan's sensors are located on an inside surface ("inside housing component") of Babashan's device, and that a sensor surface being in direct contact with a user's skin is not contradictory to the sensor acquiring data through the inside housing component where the sensor is physically located. Furthermore, locating the sensor within the inside housing component would have been obvious so as to provide a smooth inner surface to the ring device and thereby improve its wearability, as compared to having the sensor device protrude from the surface of the ring device.

7. Claim [2]: Babashan; Babashan in view of the POSA's knowledge; and Babashan in combination with Wissmar discloses: "[t]he finger-worn wearable ring device of claim 1, wherein the first portion of the cavity of the finger-worn wearable ring device is non-overlapping with the second portion of the cavity of the finger-worn wearable ring device."

Claim 2 recites "[t]he finger-worn wearable ring device of claim 1, wherein the first portion of the cavity of the finger-worn wearable ring device is non-overlapping with the second portion of the cavity of the finger-worn wearable ring device." Mr. Alarcon will testify that Babashan

provides such a disclosure. Mr. Alarcon will also testify that Babashan in view of the POSA's knowledge discloses this limitation. Mr. Alarcon will also testify that Babashan in view of Wissmar discloses this limitation. Mr. Alarcon will also testify that the motivations and expectations of success (described below) would have been the same for all permutations of combinations.

Babashan discloses the first portion of the cavity of the finger-worn wearable ring device is non-overlapping with the second portion of the cavity of the finger-worn wearable ring device. For example, Babashan discloses that the "casing 621 may house the display units 601, the user input device 622 (not shown), the sensors assembly 603, the microcontroller 20 (as illustrated in FIG. 1) and the power generating device 627." RX-0014 at [0086]. Babashan discloses "FIG. 6F illustrates the bottom view of the portable heart rate monitor 600. On its bottom surface 614, the heart rate monitor 600 may include a sensor assembly 603 for monitoring physiological parameters, and a compartment 602 for storing power generating devices 627, such as a battery. FIG. 6G, illustrates a detailed view of an exemplary heart rate monitor 600 embodiment which may include a compartment 602 on its bottom surface 614. This compartment 602 may allow for installing or storing power generating devices 627, such as a battery. This compartment 602 may be covered by a lid 602A to secure the power generating device 627." RX-0014 at [0085].

Babashan also discloses: "FIG. 9 illustrates an example of a circuit 900. This circuit 900 connects the heart rate sensor assembly 901 to a microcontroller 20. Through this connection, detected data, such as base heart rate, may be communicated from the heart rate sensor assembly 901 to the microcontroller 20 for processing and shown to the user through the illumination color light source display 906. Microcontroller 20 may comprise a application specific integrated circuit

(ASIC) or a programmable integrated circuit (PIC) which is specifically designed to control the illumination source display 306." RX-0014 at [0103].

The PCB can be put in the compartment with the battery and thus the battery and PCB are in different portions of the same cavity. As discussed above, this would be a convenient location for the PCB to connect the components. The compartment can also be expanded to accommodate the battery and PCB such that the battery and PCB are in different portions of the same cavity and that there is enough room for the components to make the ring work. Both would have required only ordinary mechanical skill and would provide predictable results.

A POSITA would have understood that there were a finite number of ways to design the cavity in a ring device and each would have been obvious to try. Niwa also discloses that its printed circuit board/substrate 11 is in a first portion of the cavity of the finger-worn wearable ring device that is non-overlapping with the second portion of the cavity where the battery 24 is located. RX-0015 at [0207]-[0214], Figs. 24-28. Webster also show that the battery is positioned in a non-overlapping portion of the cavity than the printed circuit board. RX-011 at 5:8-12.

Moreover, Wissmar discloses, for example, that wearable electronic devices, such as finger rings, could comprise "electronic components packaged and ***integrated in different ways*** . . . ***dependent on its application***." RX-0016 at Abstract (emphasis added). Indeed, Wissmar teaches that "the set of electronic and/or electromechanical components integrated" in its wearable electronic device "may be easily adapted to the intended use of the ring," and further teaches a wide breadth of applications for the ring. *Id.* at [0106], [0040]. It also teaches that, "as is readily appreciated by a person skilled in the art, other embodiments than the ones disclosed above are equally possible within the scope of the invention." RX-0016 at [0096]. Thus, Wissmar further evidences a POSITA's knowledge and skill in the art, and that a POSITA would have had a

reasonable expectation of success in making any modification as needed to placement of the electronic components within Babashan, to arrive at the claimed invention.

To the extent not already disclosed by Babashan as previously modified, it would have been obvious to incorporate Niwa's, Webster's, or Henderson's placement of the battery in a different portion of the cavity as the printed circuit board in Babashan because the two components exist in the cavity of Babashan's housing. A POSITA would have been motivated to design the first portion of the cavity that has the battery to not overlap with the portion of the cavity such that the PCB would have a thinner, more compact finger-worn wearable ring device that saves on material costs, reduces the volume of the cavity, and makes the ring more comfortable.

Dr. Rosing disagrees with Mr. Alarcon and takes the position that Claim 2 is not invalid as anticipated by Babashan, or obvious over Babashan in view of the POSA's knowledge, Wissmar, Asada, Schröder, Niwa, Armstrong, or any other references Mr. Alarcon has cited. *See* RX-0411C at ¶¶236-240. In particular, Dr. Rosing disagrees with Mr. Alarcon's statement that a POSITA would have understood that there are a finite number of ways to design the cavity in a ring device and each would have been obvious to try. *See* RX-0411C at ¶239. Dr. Rosing states that there are numerous positions and lists three particular alternatives.

In response, Mr. Alarcon will testify that Dr. Rosing is making out the problem of how to locate the electronics inside the wearable ring device to be unduly complex and uncertain. Rather, when confronted with the problem of how to locate electronics within a wearable ring, a POSITA would readily obtain a set of possible configurations and try each one out to see which configurations are feasible. This is further evidenced by the disclosures of Wissmar discussed above. *See* Rx-0016 at [0040], [106], [0096]. Indeed, such testing of various possible configurations is routine and inherent to the research and development process, and a POSITA

[redacted]

would not require undue experimentation to arrive at a workable result, such as that described by Claim 2 of the '178 Patent.

8. Claim [12]: Babashan in view of the POSITA's knowledge; and Babashan in combination with the Other References renders obvious: "[t]he finger-worn wearable ring device of claim 1, wherein the battery comprises a curved battery, wherein an arc of the curved battery approximates a corresponding arc of the external housing component."

Claim 12 recites "[t]he finger-worn wearable ring device of claim 1, wherein the battery comprises a curved battery, wherein an arc of the curved battery approximates a corresponding arc of the external housing component." Mr. Alarcon will testify that Babashan in view of the POSITA's knowledge discloses this limitation. Mr. Alarcon will also testify that Babashan in view of Henderson discloses this limitation. Mr. Alarcon will also testify that Babashan in view of Webster discloses this limitation. And Mr. Alarcon will also testify that Babashan in view of the GMBPow reference discloses this limitation. Babashan as modified discloses the battery comprises a curved battery, wherein an arc of the curved battery approximates a corresponding arc of the external housing component. Mr. Alarcon will also testify that the motivations and expectations of success (described below) would have been the same for all previous permutations of combinations to add a curved battery.

For example, Babashan discloses "FIG. 6F illustrates the bottom view of the portable heart rate monitor 600. On its bottom surface 614, the heart rate monitor 600 may include a sensor assembly 603 for monitoring physiological parameters, and a compartment 602 for storing power generating devices 627, such as a battery. FIG. 6G, illustrates a detailed view of an exemplary heart rate monitor 600 embodiment which may include a compartment 602 on its bottom surface 614. This compartment 602 may allow for installing or storing power generating devices 627, such as a battery. This compartment 602 may be covered by a lid 602A to secure the power generating device 627." RX-0014 at [0085].

Babashan further discloses "FIG. 6H is a three dimensional view of the heart rate monitor 600 embodiment. The casing 621 of the heart rate monitor 600 may be in the shape of a bracelet. This casing 621 may house the display units 601, the user input device 622 (not shown), the sensors assembly 603, the microcontroller 20 (as illustrated in FIG. 1) and the power generating device 627. The casing 621 of the heart rate monitor 600 may have many different designs. It may be designed to be worn on different body parts, such as wrists, fingers, ears, neck, chest or ankles." RX-0014 at [0086].

Moreover, it would have been obvious in view of a POSITA's knowledge and/or the references cited herein for Babashan to include a curved battery with an arc that approximates the corresponding arc of the external housing component. Indeed, a POSITA would naturally look to find a battery that fits inside of Babashan's ring housing and that would be a battery that includes an arc that approximates the arc of the housing. Using a curved battery is nothing more than ordinary mechanical skill. This would maximize battery capacity while still fitting inside of the housing. As battery technology naturally improved over time, a POSITA in November of 2013 would have used a curved battery in the housing with an arc that approximated the arc of the external housing component. The POSITA easily could have expanded Babashan's compartment to accommodate a larger, curved battery that has an arc that approximates a corresponding arc of the external housing component such that Babashan's ring increases the battery life of the device and increase convenience of the user. As discussed below, curved batteries were commercially available prior to the earliest claim of priority of the '178 Patent.

In addition, Webster discloses a ring 100 including a flexible circuit board 102. The flexible circuit board 102 supports a radio frequency device 200 which includes, among other things, a battery 212. RX-0011 at 1:40-61, 5:8-12. "A battery 212 together with voltage regulation circuitry

[redacted]

can supply the proper voltage to each of the circuit elements. The battery 212 can, in one embodiment, be a thin film lithium ion or zinc-manganese dioxide chemistry battery that can be bent or curved. RX-0011 at 5:8-12. Mr. Alarcon will testify that it would have been obvious to use Webster's battery in Babashan because it naturally would have fit inside of Babashan's housing and doing so would increase the battery capacity and life of the device.

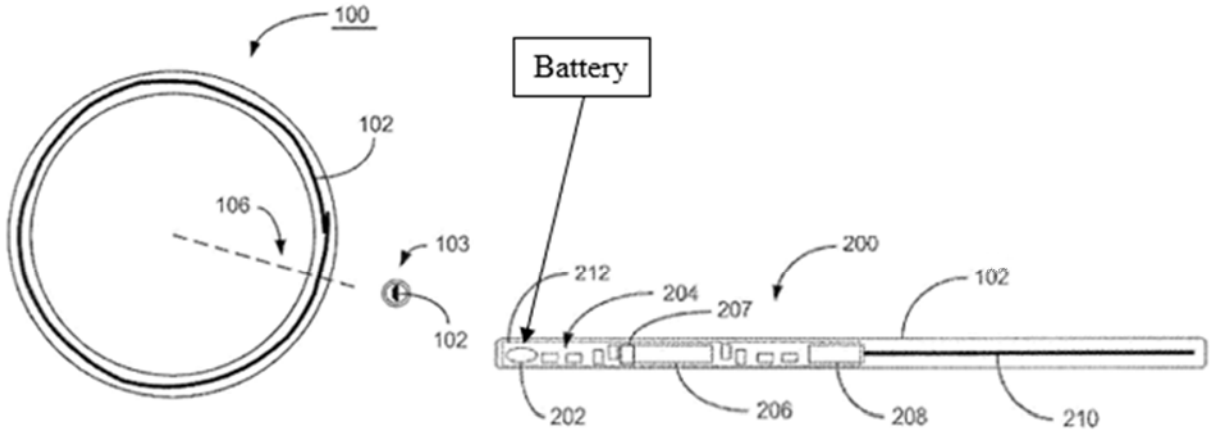

FIG. 1 FIG. 2A

RX-0011 at FIGS. 1 and 2A (annotated).

Henderson is similarly directed to a batteries and power management in a ring-shaped activity monitoring device with curved batteries that measures various biometric information. Henderson states that its "batteries 142 have a curvilinear or curved configuration" that "are generally flush with the inner surface 32 of the spine member 22," which is curved. RX-0012 at [0077]. Henderson also discloses "the device may include one or more functional batteries of a curved profile," and discloses how to make curved batteries. RX-0012 at [0125]. "Accordingly, the device may include one or more functional batteries of a curved profile." *Id*. It would have been obvious to use Henderson's battery in Babashan because Henderson teaches that its battery

[redacted]

can be different sizes and would have naturally contoured to fit inside of Babashan's housing and doing so would increase the battery capacity and life of the device. RX-0012 at [0078].

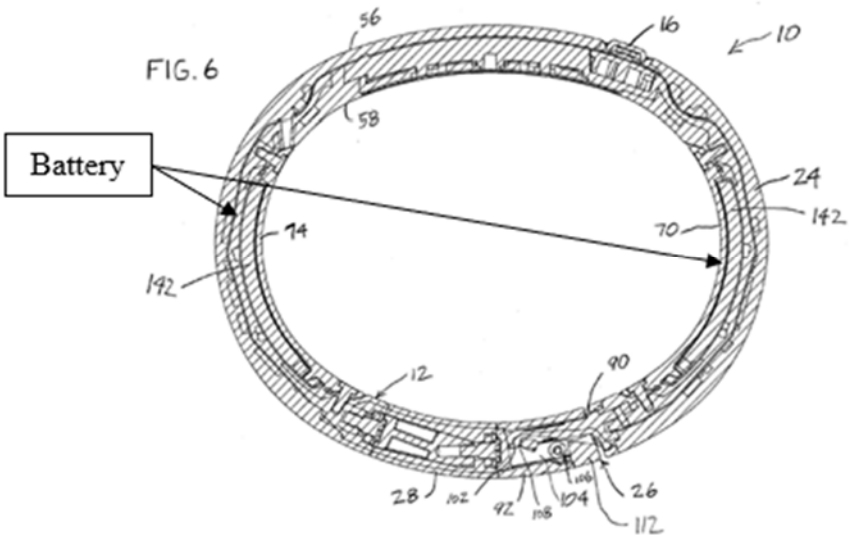

RX-0012 at FIG. 6 (annotations added). A POSITA would have understood that the Nike+ FuelBand is the real life embodiment of Henderson, which was filed by Nike. The Nike+ FuelBand was a product that had curved batteries and was released prior to 2013, as evidenced by this 2012 YouTube teardown. RX-0032.

RX-0032 at 3:18, 3:56.

In addition, the '178 Patent explains that the battery "can be any type of battery, such as a rechargeable battery. The battery can be a thin, flexible lithium ceramic chemistry battery. In another example, the battery can be a circular formed lithium polymer or lithium ion battery. The

battery can provide power to any of the components described above. In one example, the battery can be a lithium cell integrated directly with the flexible PCB described above. Other implementations can integrated the battery directly onto the housing to reduce the volume of 20 space taken up by battery packaging." JX-0001 at 15:12-21. These types of curved batteries disclosed in the '178 Patent were within the POSITA's knowledge as evidenced by: GMBPower batteries that were curved and commercially available. RX-0030.

GMBPower had a Lithium Polymer Battery for sale in on October 21, 2013, that "can be made at clients requirement." *Id*. The battery was "[b]endable, rechargeable, thin, light, and with long shelf life." The smallest listed lithium curved battery for sale was 2.0 mm thick, 10 mm wide, and 21 mm long. The specification states that "By way of non-limiting example, the WCD interior diameter d1 (the diameter generally defining the ring size) can be in an approximate range of 12 mm to 24 mm so as to accommodate finger sizes ranging from a small child to a larger adult, and on any acceptable finger, including the thumb. The exterior diameter d2 can also be any reasonable size or shape, and can define an approximate range of between 18 mm and 30 mm. Likewise, the thickness between diameters dl and d2 can vary widely, but can typically reside in an approximate range of 1.5 mm to 3 mm. The width WR of the WCD along the direction of finger extension (finger longitudinal direction) is widely variable, and can be selected, in part to accommodate internal and external components. In a non-limiting example, the width WR is in a range of approximately 3 mm to 8 mm." JX-0001 at 17:4-18. Thus, GMBPow batteries were of the correct size to fit inside of finger-worn rings, including that of Babashan, which is of approximate size to the rings described by the '178 Patent because both are rings that need to fit on the finger. Mr. Alarcon will testify that it would be obvious and easy to swap out Babashan's battery to connect the GMBPow battery. The only other modification would be to shorten Babashan's PCB slightly

to allow for more room for the battery. Both of these changes would be of ordinary mechanical skill. The POSITA would be motivated to use the GMBPow curved battery in Babashan to increase the life of Babashan's ring.

Furthermore, a POSITA would be motivated to place a curved battery "wherein an arc of the curved battery approximates a corresponding arc of the external housing component" by simply examining the curved housing and selecting a battery to mirror the size and shape of the curved housing. Eric Strasser, a founder of Motiv, described the obvious nature of developing the battery for the ring:

> Q. And the idea of a curved battery is from the idea that you have a curved housing; is that right?
> A. Correct, we wanted to create a product that looked like a ring.
> Q. And so for a battery to be used in a curved housing, the battery would also need to be curved?
> A. Correct.

RX-321C at 191:6-14; *See also id*. at 190:16-23.

Mr. Strasser also testified that others already "knew how to [make the curved battery]" and "they already had the process in place." And that the battery manufacturer "had product that we identified as the solution to what we were looking for," "had the experience of building it," and "they had batteries small enough to fit in a wearable device which could be constructed as a ring" when the inventors approached this company. *Id*. at 194:9-14, 205:9-16. To the extent that Oura argues that non-ring devices are inapplicable the inventors looked to other to find the ultimate battery manufacturer for the inventors' product. *Id.* at 195:23-196:7. Eric Strasser and the inventors of the '178 patent viewed wrist and other wearable devices as analogous prior art. *See* RX-0307; RX-0321C E. Strasser Tr. at 112:8-16.

To the extent that these other devices do not relate to rings, Mr. Alarcon will testify that the '178 Patent discloses that the components in the finger-worn device of the '178 Patent were

transferable to wrist and arm form factors, demonstrating the analogous nature between wrist and ring wearable technology. "Although the WCD of the present disclosure is depicted as a ring that can be worn on the finger of a user, other shapes, designs, and form factors can be utilized for the WCD. For example, the WCD can be in the form of a wrist band, bracelet, necklace, earring, or any other type of wearable accessory. In this regard, references to the finger of a user in the present application can be considered to apply to other portions of a human body depending on the form of the WCD, such as wrist, neck, ear, etc." JX-0001 at 8:66-9:7.

Dr. Rosing disagrees with Mr. Alarcon's assessment of Claim 12 of the '178 Patent and in particular opines that she does not see how a POSITA could expand Babashan's battery compartment while also shrinking the bracelet to a ring form factor. *See* RX-0411C at ¶¶241-246. Dr. Rosing also contends that "shrinking the bracelet disclosed in Babashan to a ring would result in a significant *decrease* in battery life." (*Id.* at ¶245.) Dr. Rosing therefore views Claim 12 of the '178 Patent as not being anticipated by Babashan, or not obvious over Babashan in view of the POSA's knowledge, Wissmar, Asada, Schröder, Niwa, Armstrong, Webster, GMBPower, Henderson, or any other references Mr. Alarcon has cited.

Regarding battery life, however, a POSITA, would have understood that the arc of a curved battery allows for more battery surface area while taking up the same lateral space that an equivalent flat battery would—directly resulting in more capacity and battery life. Moreover, the above disclosures (specifically Henderson, Webster, and the Nike Fuel Band) simply provide examples of curved or flexible batteries and show that those batteries existed prior to November 2013. And a POSA would have understood that because those batteries existed, the technology existed, and that sizes appropriate for a ring of those batteries would be out in the marketplace, too. Alarcon Dep. Tr. at 100:2-101:3. Indeed, Mr. Alarcon will provide an example that would fit

[redacted]

in a finger ring (according to the '178 Patent)—the GMBPow described above. RX-003C at ¶¶ 100-102.

9. Claim [13]: Babashan discloses: "[t]he finger-worn wearable ring device of claim 1, wherein the one or more sensors comprise a first light-emitting component configured to emit light associated with a first wavelength, and a second light-emitting component configured to emit light associated with a second wavelength different from the first wavelength."

Claim 13 recites "[t]he finger-worn wearable ring device of claim 1, wherein the one or more sensors comprise a first light-emitting component configured to emit light associated with a first wavelength, and a second light-emitting component configured to emit light associated with a second wavelength different from the first wavelength." Mr. Alarcon will testify that Babashan provides such a disclosure.

Babashan discloses the one or more sensors comprise a first light-emitting component configured to emit light associated with a first wavelength, and a second light-emitting component configured to emit light associated with a second wavelength different from the first wavelength.

For example, Babashan discloses "[i]n an exemplary embodiment, FIG. 6[I] illustrates a sensor assembly 603 positioned on the bottom surface 614 of the heart rate monitor 600. When the heart rate monitor 600 is placed around a body structure, the sensor assembly 603 which is on the bottom surface 614 of the heart rate monitor 600 will come in contact with that body structure. The sensor assembly 603 detects physiological parameters and sends the collected data to the microcontroller 20 (illustrated in FIG. 1) for processing. The processed data will in turn be displayed by the display units 601." RX-0014 at [0087].

Babashan discloses that "the heart rate monitor 600 may use pulse oximetry technology to monitor physiological data such as heart rate and blood oxygen levels." *See*, e.g., *id.* at [0088]. The heart rate monitor 600 may include sensor assemblies 600, 600A. "Combining the monitoring

[redacted]

function of sensor assembly 603 and 603A allows for a more accurate and constant monitoring of the pulse and blood oxygen levels." *See*, e.g., *id.* at [0094]. Each sensor assembly 600, 600A may include a respective emitter 801, 802. "The emitter 801 may function in transmission mode and transmit light 805 through an anatomical structure to the photo detector 800. The emitter 802 may function in reflectance mode and transmit light 804 to a photo detector 800A by reflecting the light 804 through the tissue of an anatomical structure, such as a wrist 803…The emitters 801 and 802 may each emit light in different wavelengths." *See*, e.g., *id.* at [0095].

Babashan further discloses that "[t]he emitters 801 and 802 may each emit light in different wavelengths. For example, each emitter may emit light at about 910 nm and/or 660 nm wavelengths." RX-0014 at [0095]; *see also* annotated Fig. 8B below.

Fig. 8B

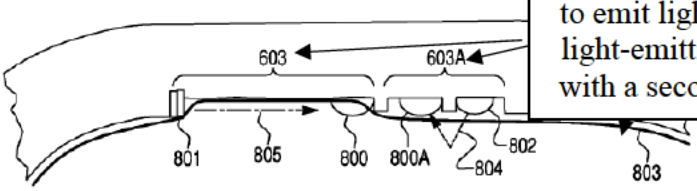

Sensors comprise a first light-emitting component configured to emit light associated with a first wavelength, and a second light-emitting component configured to emit light associated with a second wavelength different from the first wavelength

Further, Babashan states "The light emitter and photo detector are commercially available components specified for medical purposes. Typically, the light emitters include small light-emitting diodes (LEDs). However, it should be noted that any of a variety of illumination sources operating in the appropriate frequency range will suffice. Such illumination sources may include, for example, LEDs, LCDs, ELDs, etcs. For illustrative purposes discussion herein will assume a LED emitter source. One LED emits light in the red range, with wavelength of about 660 nm (±15 nm), and the other emits light in the infrared range, about 905, 910, or 940 nm (±15 nm)." RX-0014 at [0090].

[redacted]

The sensors are within the finger-worn device because the inner circumferential surface is formed by the internal housing component and the sensors acquire data through the window in a similar manner as the ’178 Patent.

Fig. 6H

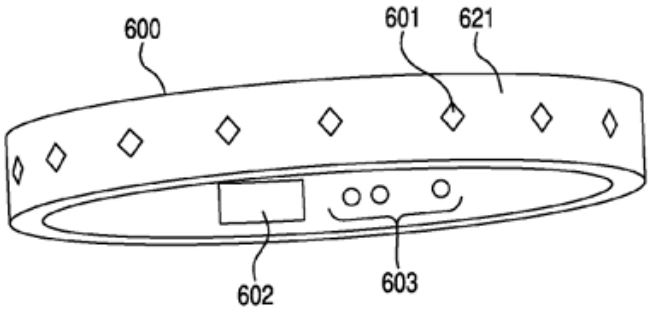

RX-0014 at Fig. 6H.

Fig. 9

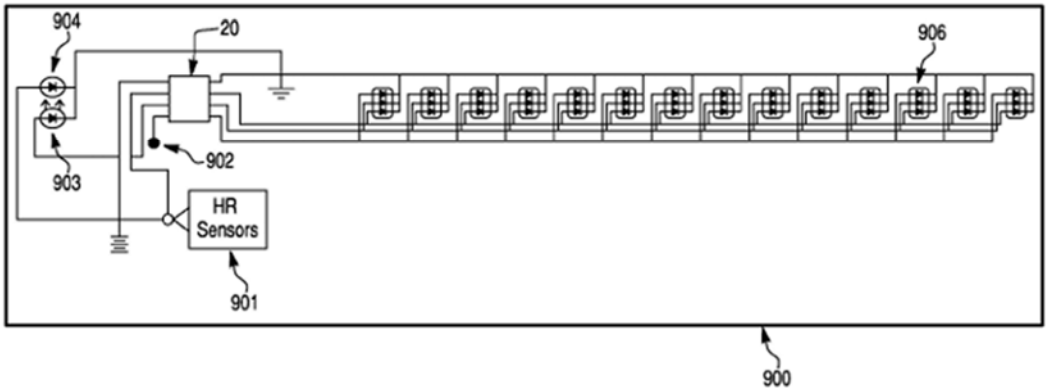

RX-0014 at Fig. 9.

Babashan discloses “FIG. 9 illustrates an example of a circuit 900. This circuit 900 connects the heart rate sensor assembly 901 to a microcontroller 20. Through this connection, detected data, such as base heart rate, may be communicated from the heart rate sensor assembly 901 to the microcontroller 20 for processing and shown to the user through the illumination color light source display 906. Microcontroller 20 may comprise a application specific integrated circuit

(ASIC) or a programmable integrated circuit (PIC) which is specifically designed to control the illumination source display 306." RX-0014 at [0103].

Oura admits that Babashan discloses "a light emitting component configured to emit an infrared wavelength," and a light emitting component configured to emit a visible light wavelength." RX-0326 at RFA Nos. 643 and 644. Oura admits that Babashan discloses "a light receiving component." RX-0326 at RFA No 645.

Dr. Rosing opines that because claim 1 would not have been obvious over Babashan, or obvious over Babashan in view of the POSA's knowledge, Wissmar, Asada, Schröder, Niwa, Armstrong, or any other references Mr. Alarcon has cited, claim 13 is not obvious as well. *See* RX-0411C at ¶¶247-248. But for the reasons discussed, claim 1 is obvious over the cited art. Dr. Rosing proffers no other opinion on invalidity for this claim, and thus, Oura has failed to rebut Respondents' arguments. RX-0319C at 153:24-154:3.

10. Claim [14]: Babashan discloses: "[t]he finger-worn wearable ring device of claim 13, wherein the first wavelength is associated with visible light, and wherein the second wavelength is associated with infrared light."

Claim 14 recites "[t]he finger-worn wearable ring device of claim 13, wherein the first wavelength is associated with visible light, and wherein the second wavelength is associated with infrared light." Mr. Alarcon will testify that Babashan does provide such a disclosure.

Bababshan discloses the first wavelength is associated with visible light, and wherein the second wavelength is associated with infrared light. For example, Babashan discloses "[t]he emitters 801 and 802 may each emit light in different wavelengths. For example, each emitter may emit light at about 910 nm and/or 660 nm wavelengths." RX-0014 at [0095]; *see also id.* at Fig. 8B.

[redacted]

Fig. 8B

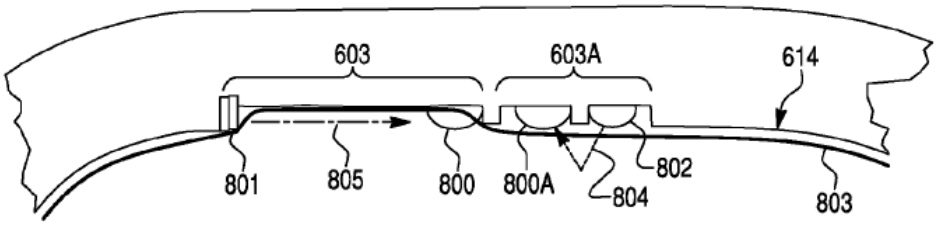

RX-0014 at Fig. 8B.

Babashan also discloses "[i]n one embodiment, the heart rate monitor 600 may use pulse oximetry technology to monitor physiological data such as heart rate and blood oxygen levels. Pulse oximetry has been used for many years as a mechanism to monitor heart rate and oxygen levels in the blood. In pulse oximetry, a light emitter and photo detector are typically placed on either side of a thin structure of the patient's anatomy, usually a fingertip or earlobe, or in the case of a neonate, across a foot, and a light containing both red and infrared wavelengths is passed from one side to the other. Based upon the ratio of changing absorbance of the red and infrared light caused by the difference in color between oxygen-bound (bright red) and oxygen unbound (dark red or blue, in severe cases) blood hemoglobin, a measure of oxygenation (the per cent of hemoglobin molecules bound with oxygen molecules) can be made." RX-0014 at [0088]. The LEDs are within the internal and external housing components as discussed above.

Further, Babashan discloses "[T]he transmission mode emitter may be set to emit light in the red range of about 660 nm and the reflectance mode emitter may be set to emit light in the infrared range of about 910 nm or vice versa." RX-0014 at [0096].

Dr. Rosing merely opines that claim 14 depends from claim 13, and thus incorporates all limitations of claim 13, and that claim 13 would not have been obvious over Babashan, or obvious over Babashan in view of the POSA's knowledge, Wissmar, Asada, Schröder, Niwa, Armstrong,

or any other references Mr. Alarcon has cited. *See* RX-0411C at ¶250. Dr. Rosing concludes that claim 14 is therefore not obvious. *See* RX-0411C at ¶250. But, for the reasons discussed, claim 13 is obvious over the prior art. Rosing proffers no other opinion on invalidity for this claim, and thus, Oura has failed to rebut Respondents' arguments. RX-0319C at 154:4-22.

11. Claim [17]: Babashan; and Babashan in view of the POSA's knowledge discloses: "[t]he finger-worn wearable ring device of claim 1, wherein the external housing component and the internal housing component define the cavity configured to at least partially surround the battery, and the printed circuit board, wherein one of the external housing component or the internal housing component comprises: a first side wall and a second side wall that extend between the internal housing component and the external housing component, wherein the cavity is defined at least in part by the outer circumferential surface, the inner circumferential surface, the first side wall, and the second side wall."

Claim 17 recites "[t]he finger-worn wearable ring device of claim 1, wherein the external housing component and the internal housing component define the cavity configured to at least partially surround the battery, and the printed circuit board, wherein one of the external housing component or the internal housing component comprises: a first side wall and a second side wall that extend between the internal housing component and the external housing component, wherein the cavity is defined at least in part by the outer circumferential surface, the inner circumferential surface, the first side wall, and the second side wall." Mr. Alarcon will testify that Babashan provides such a disclosure. Mr. Alarcon will also testify that Babashan in view of the POSA's knowledge discloses this limitation. Mr. Alarcon will also testify that the motivations and expectations of success (described below) would have been the same for all previous permutations of combinations.

For example, Mr. Alarcon will testify that Babashan alone or as previously modified discloses the external housing component and the internal housing component define the cavity configured to at least partially surround the battery, and the printed circuit board, wherein one of

the external housing component or the internal housing component comprises a first side wall and a second side wall that extend between the internal housing component and the external housing component, wherein the cavity is defined at least in part by the outer circumferential surface, the inner circumferential surface, the first side wall, and the second side wall.

The heart rate monitor device 600 includes a casing 621 with a top surface 613, a bottom surface 614, and a side surface 629 RX-0014 at [0073]. When the heart rate monitor 600 is placed around a body structure, the bottom surface 614 of the heart rate monitor 600 will come in contact with that body structure RX-0014 at [0087].

For example, Babashan discloses that the heart rate monitor device 600 includes a casing 621 with a top surface 613, a bottom surface 614, and a side surface 629. When the heart rate monitor 600 is placed around a body structure, the bottom surface 614 of the heart rate monitor 600 will come in contact with that body structure. RX-0014 at [0073], [0087]. Babashan discloses that on the bottom surface 614 of the casing 621 is a compartment 602 for storing power generating devices 627, such as a battery. "This compartment 602 may allow for installing or storing power generating devices 627, such as a battery. This compartment 602 may be covered by a lid 602A to secure the power generating device 627." RX-0014 at [0085]; *see also* annotated Figs. 6H, 6F, and 6A below.

[redacted]

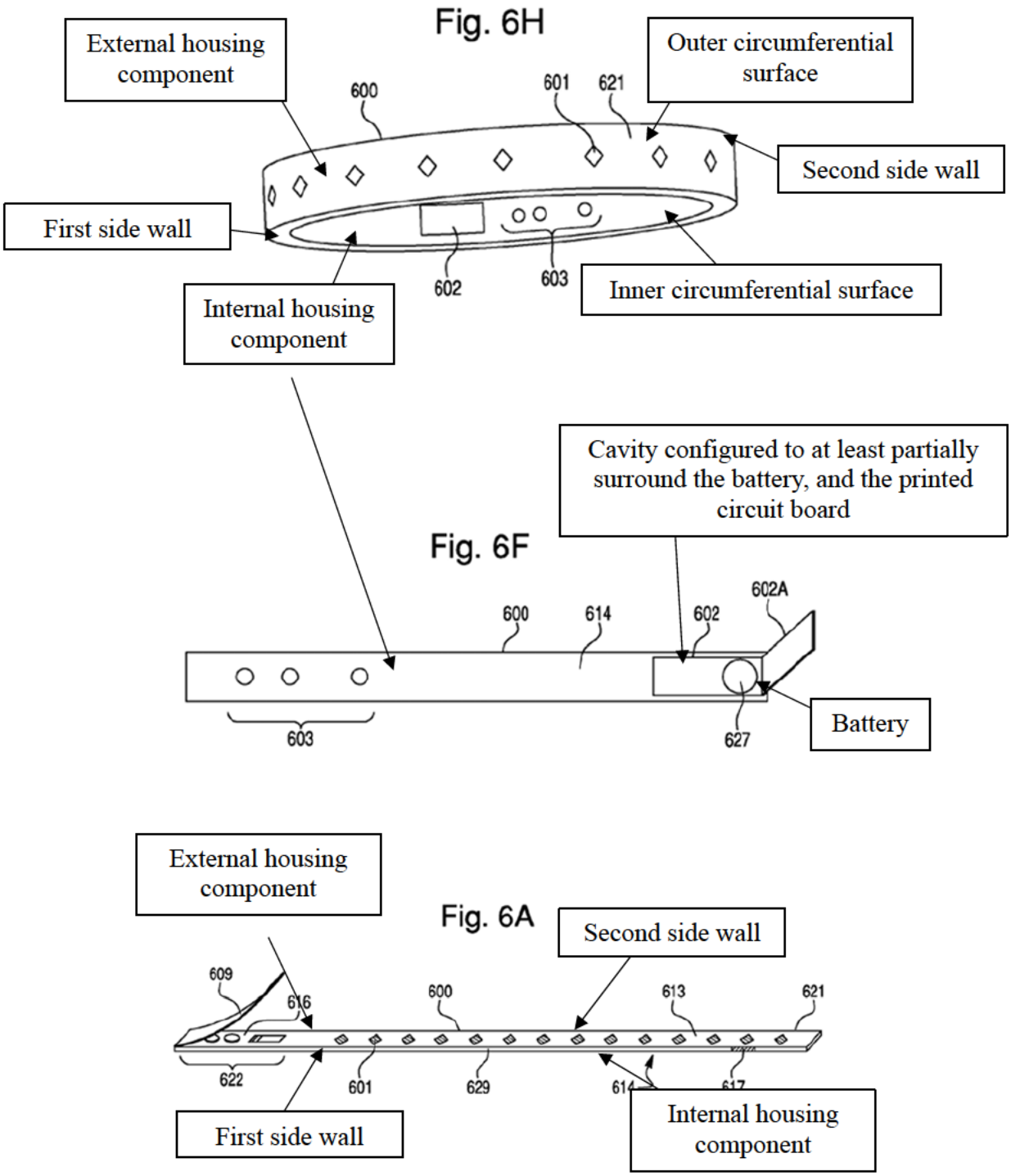

RX-0014 at Figs. 6H, 6F, and 6A (annotated).

Dr. Rosing states that claim 17 depends from claim 1, and thus incorporates all limitations of claim 1, and states that it is her opinion that claim 1 would not have been obvious over Babashan in view of the POSA's knowledge, Wissmar, Asada, Schröder, Niwa, Armstrong, or any other references Mr. Alarcon has cited. *See* RX-0411C at ¶¶251-252. Dr. Rosing therefore opines that claim 17 is not obvious as well. *See* RX-0411C at ¶¶251-252. But, for the reasons discussed, claim 1 is obvious over the prior art. Dr. Rosing proffers no other opinion on invalidity for this claim, and thus, Oura has failed to rebut Respondents' arguments. RX-0319C at 154:23-155:23.

12. Claim [18]: Babashan; Babashan in view of the POSA's knowledge discloses: "[t]he finger-worn wearable ring device of claim 17, wherein the first side wall, the second side wall, or both, are substantially perpendicular to the inner circumferential surface, the outer circumferential surface, or both."

Claim 18 recites "[t]he finger-worn wearable ring device of claim 17, wherein the first side wall, the second side wall, or both, are substantially perpendicular to the inner circumferential surface, the outer circumferential surface, or both." Mr. Alarcon will show that Babashan provides such a disclosure. Mr. Alarcon will also testify that Babashan as previously modified discloses this limitation.

As discussed above with respect to claim 17, Babashan discloses the first side wall, the second side wall, or both, are substantially perpendicular to the inner circumferential surface, the outer circumferential surface, or both. RX-0014 at [0073], [0085], [0087]; *see also* annotated Fig. 6H below.

[redacted]

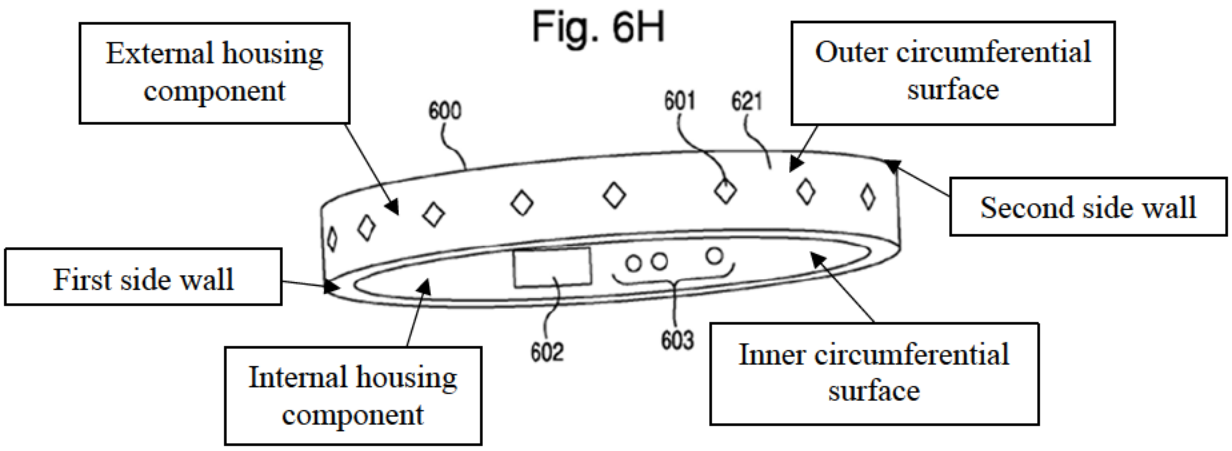

Dr. Rosing states in her Report that claim 18 depends from claim 1, and thus incorporates all limitations of claim 1. *See* RX-0411C at 253-254. Because it is her opinion that claim 1 would not have been obvious over Babashan in view of the POSA's knowledge, Wissmar, Asada, Schröder, Niwa, Armstrong, or any other references Mr. Alarcon has cited, Dr. Rosing opines that claim 17 is not obvious as well. *See* RX-0411C at 253-254. But, as discussed, claim 1 is obvious over the prior art, such that Oura fails to rebut Respondents' arguments.

G. Niwa Anticipates; Niwa Renders Obvious in view of Other References; and Niwa Renders Obvious in view of the POSA's knowledge the Asserted Claims

Niwa anticipates; Niwa renders obvious in view of the Schröder; and Niwa renders obvious in view of the POSA's knowledge asserted claim 1.

1. Claim [1-pre]: Niwa discloses "[a] finger-worn wearable ring device, comprising:"

The preamble of claim 1 recites: "[a] finger-worn wearable ring device, comprising." The parties have agreed that the preamble is limiting. Mr. Alarcon will testify that Niwa discloses this limitation. RX-0003C at ¶ 247-250.

Mr. Alarcon will explain that Niwa discloses a finger-worn wearable ring device. Specifically, Niwa discloses "a finger ring construction to be worn on a third joint of a finger."

[redacted]

RX-0015 at [0028]. Niwa discloses a "pulse sensor 1" worn on a user's finger. *See, e.g.* RX-0015 at Figs. 22 and 26, and [0206].

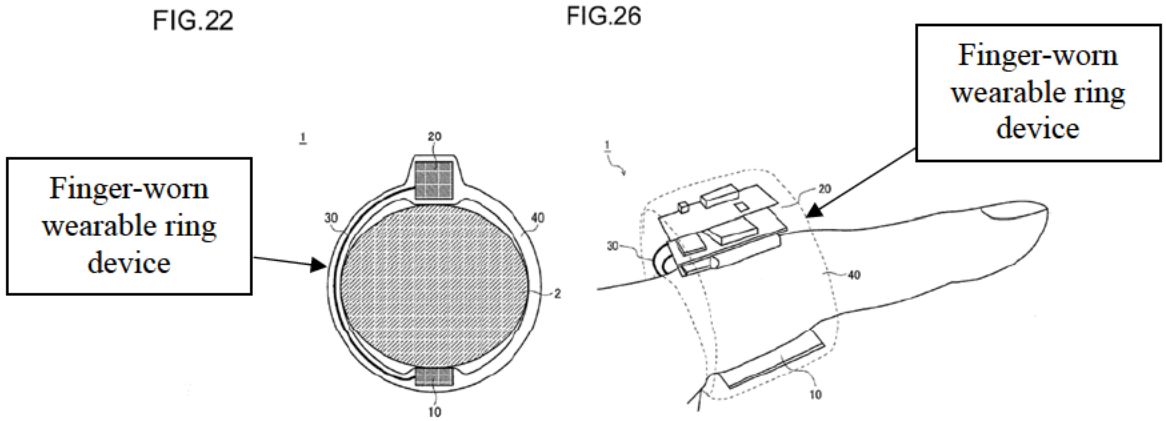

Id. at Figs. 22 and 26.

Because Niwa's above ring is "to be worn on a third joint of a finger and to measure the plethysmogram," Niwa's pulse sensor 1 is finger-worn, wearable, and is a ring device. The above figures and paragraphs disclose that the pulse sensor 1 is worn on the finger, can be worn, and comprises a plethysmogram sensor and battery source. *Id.* at [0029]. Complainants admit that Niwa discloses a finger-worn wearable ring device. RFA 256 of RX-0326.

2. Claim [1a]: Niwa; Niwa in view of the POSA's knowledge; and Niwa in combination with Schröder discloses "an external housing component defining an outer circumferential surface of the finger-worn wearable ring device;"

Claim 1 recites "an external housing component defining an outer circumferential surface of the finger-worn wearable ring device." Mr. Alarcon will testify that Niwa alone discloses this limitation. Mr. Alarcon will also testify that Niwa in combination with the POSA's knowledge discloses this limitation. Mr. Alarcon will also testify that Niwa in combination with Schröder discloses this limitation. RX-0003C at ¶¶ 251-263. The motivation to combine and expectations of success (discussed below) are the same for (1) Niwa in combination of Schröder; and (2) Niwa in combination with the POSA's knowledge for this limitation.

Mr. Alarcon will explain that Niwa discloses schematic constructions of its plethysmogram sensor as a finger ring type. Niwa discloses that "FIG. 22 is a cross section diagram illustrating a construction example of the plethysmogram sensor schematically. The plethysmogram sensor 1 of this construction includes a construction to measure the plethysmogram at the third joint of the finger 2 as illustrated in FIG. 21, to be more concrete, a finger ring construction to measure the plethysmogram which is worn on the third joint of the finger 2." RX-0015 at [191].

FIG.22

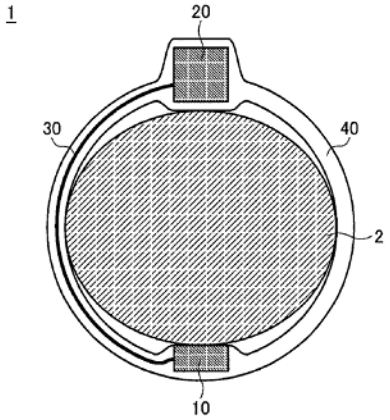

RX-0015 at Fig. 22.

Niwa additionally discloses that "although a construction whose finger type housing 40 of the implementation example 2 is formed as [a] circle completely is illustrated in FIG. 22, the construction of this invention is not restricted to this." RX-0015 at [0204]. Niwa then provides an additional example of Figure 23 where "the finger ring type housing 40 can be constructed as having an opening 41 a part of a circle is opened." RX-0015 at [0204]. Niwa then provides additional disclosure regarding this example:

> FIG. 24 to FIG. 26 are perspective diagrams illustrating a situation where the pulse sensor 1 of the implementation example 2 is worn on a third joint of the finger respectively. In addition, FIG. 24 is a see through illustration to see the

[redacted]

plethysmogram sensor 1 from the back side of the hand, FIG. 25 is a see through illustration to see the plethysmogram sensor 1 from the palm side of the hand, and FIG. 26 is a see through illustration to see the plethysmogram sensor 1 from the side. As illustrated in these diagrams, to not let the examinee have a consciousness for wearing the plethysmogram sensor 1 (i.e., not let the examinee have an uncomfortable feeling), it is desirable to restrain the largeness of the first unit 10 and the second unit 20 not to protrude from the third joint of the finger 2.

RX-0015 at [0206].

FIG.24

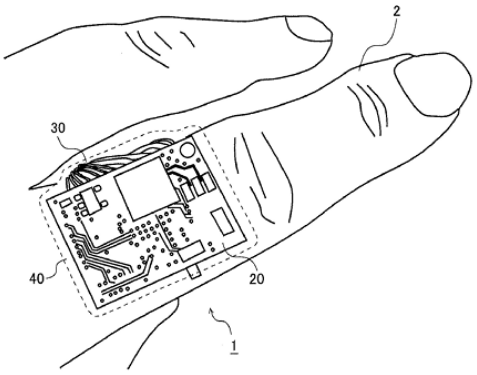

FIG.25

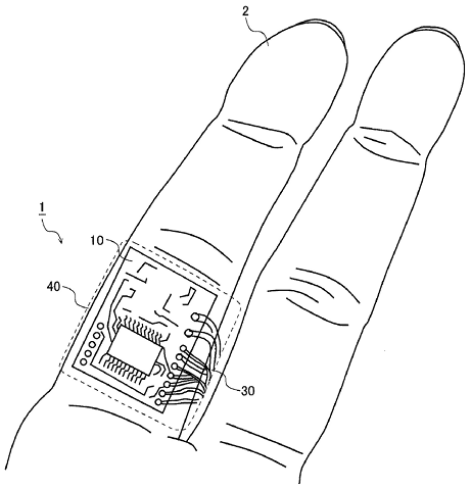

Niwa discloses that "FIG. 26 is a third perspective diagram illustrating a situation where the pulse sensor 1 is worn on the third joint of the finger in accordance with the implementation example 2 of the invention." RX-0015 at [0111]. Fig. 26 shows sensor 1 with first unit 10, second unit 20, cable 30, and housing 40. RX-0015 at [0191].

[redacted]

FIG.26

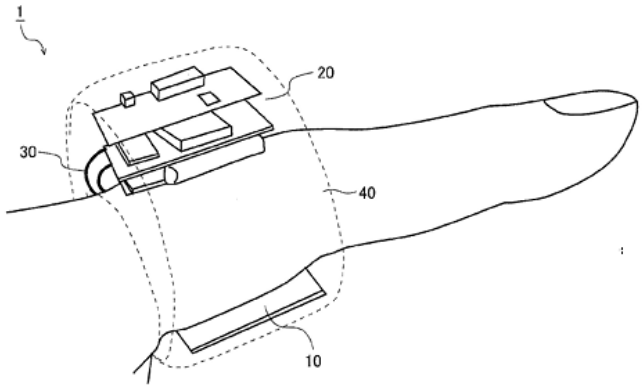

As shown in Fig. 26, the finger ring type housing 40 has an external housing component or outer wall (shown in yellow below) defining an outer circumferential surface. As seen from the red ovals in Fig. 26, the shape of the ring's outermost surface is circumferential under the plain and ordinary meaning. *See* JX-0014 at 17 (ALJ concluding that "circumferential" has its plain and ordinary meaning and does not require a closed shape).

[redacted]

FIG.26

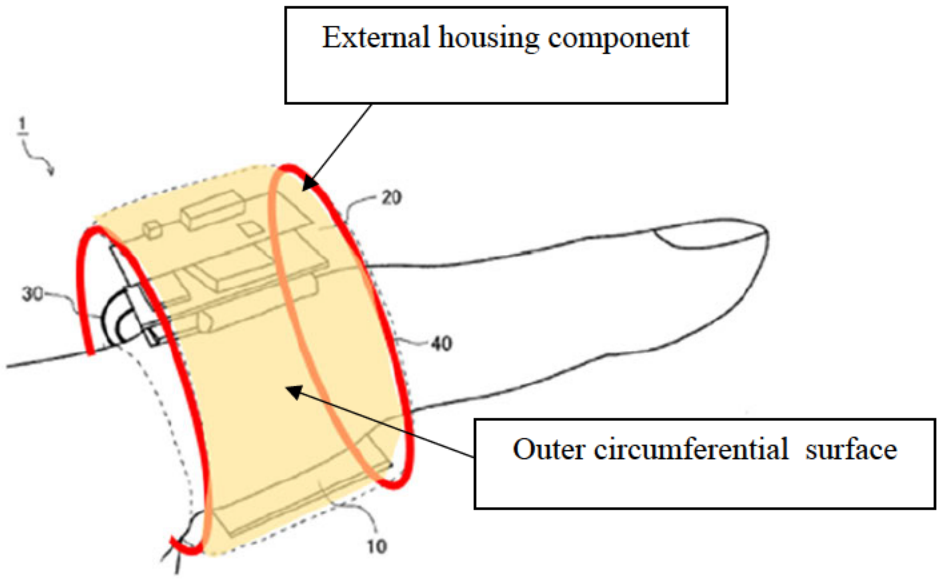

Id. at Fig. 26 (annotations added). To the extent that Oura alleges that Niwa does not disclose an outer circumferential surface of the finger-worn wearable ring device, Niwa discloses multiple shapes for its external housing and Fig. 26 shows that the external housing component is circumferential.

In addition, a POSA would understand that Niwa's external housing component is a structure that encloses space. As seen in Figs. 22 and 26, Niwa's finger ring device "includes a first unit to measure the plethysmogram, a second unit to perform a power Supply to the first unit, a finger ring type housing to contain the first unit and the second unit, wherein the first unit is contained within the finger ring type housing to be located at the ball side of the finger when the finger ring type housing is worn on the third joint of the finger, and the second unit is contained within the finger ring type housing to be located at the back side of the finger when the finger ring type housing is worn on the third joint of the finger (i.e., the construction 2-3)." *Id.* at [0029]. And

Niwa also includes "a cable [30 below] to connect the first unit and the second unit electrically." RX-0015 at [0062].

Oura admits that Niwa discloses a housing. RFA 257 of RX-0326.

Niwa further discloses that the first unit, second unit, and the cable 30 are "contained within the finger ring type housing." RX-0015 at [0029], [0192], [0193]. Figs. 24-26 illustrate different perspectives of the same embodiment of Niwa. *See* RX-0015 at [0206] ("FIG. 24 to FIG. 26 are perspective diagrams illustrating a situation where the pulse sensor 1 of the implementation example 2 is worn on a third joint of the finger respectively." Fig. 24 is a "see though illustration to see the plethysmogram senor 1 from the back side of the hand," and Fig. 25 is "a see through illustration to see the plethysmogram sensor 1 from the palm side of the hand." *Id.* Figs. 24 and 25 illustrates the cable 30 that connects the first unit 10 to the second unit 20 as a bundle of multiple wires, thus the external housing component encloses space.

Thus, Mr. Alarcon will testify that Niwa discloses an external housing component defining an outer circumferential surface of the finger-worn wearable ring device.

To the extent that Niwa does not disclose an external housing component with an outer circumferential surface, this would have been an obvious modification. A POSA easily could have rounded Niwa's housing as shown in Figure 22 to create a seamless surface. Mr. Alarcon will testify that this would have required nothing more than ordinary skill. Using a circular outer housing for a ring was well known in the art at the time, as evidenced by U.S. Schröder and DE Schröder, which teach a finger ring with an external housing component with a circumferential outer surface.

[redacted]

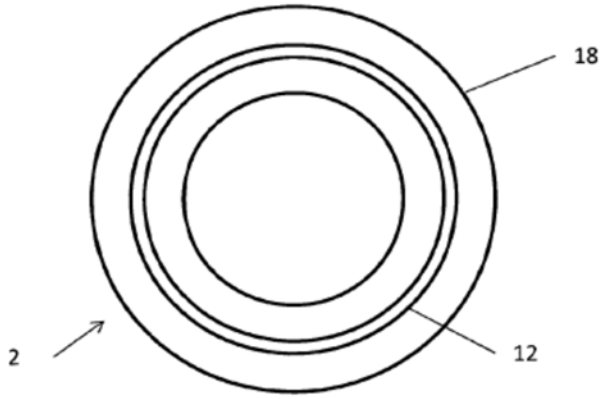

Fig. 4

Schröder at Fig. 4.

Schröder discloses that "FIG. 4 shows a longitudinal section through a finger-ring 2. Here, an inlay 12 is inserted into one half 18 of the finger-ring 2. FIG. 5 shows a cross section, corresponding to FIG. 4, of the finger-ring 2. The finger-ring 2 consists of two ring halves 16 and 18. The two ring halves 16 and 18 respectively have a recess into which the inlay 12 is inserted." Schröder at 12:4-9, Fig. 4; DE Schröder at Fig. 4, 6-10; Schröder at Figs. 6-10.

A POSA would have been motivated to apply the teachings of Schröder and its disclosure of a circumferential outer housing to Niwa and would have had a reasonable expectation of success in doing so, because each relates to the same well-known technologies and to wearable biometric sensing devices having similar structural components including inner and outer housing components, a cavity, and electronic components within the cavity. To the extent that Niwa's external housing component is not circumferential, making it circumferential would be an obvious mechanical change for a POSA to make and it may provide a more natural ring design for the user and/or a smaller form factor. It would make replacing defective parts easier, increase lifetime of Niwa's internal components, increase manufacturability and decrease cost of the housing. A POSA would have understood that rings have multiple form factors, and modifying the outer housing

would have been well understood and a predictable change. Furthermore, Niwa already discloses a circumferential outer surface in Fig. 26.

Whether Niwa is combined with Schröder or combined with the POSA's knowledge as evidenced by Schröder—the motivation to form a circumferential surface and the expectation of success would be the same.

Oura alleges that "Niwa discloses a unitary structure, and therefore fails to disclose an external housing component defining an outer circumferential surface of the finger-worn wearable ring device." RX-02259C at 1. But Oura does not provide any substantiation for this claim, and Oura is improperly trying to engage in improper claim construction. Claim 1 says nothing about a "unitary structure" – it requires "an external housing component defining an outer circumferential surface of the finger-worn wearable ring device," which is disclosed by Niwa. Moreover, Oura's contention regarding a "unitary structure" is irreconcilable with its infringement position that the "crust" of the accused products constitutes and internal housing component. To the extent the accused products have an "internal housing component" as alleged by Complainants – which they do not for the reasons discussed in the non-infringement portion of this brief – then Niwa must also disclose an "external housing component defining an outer circumferential surface of the finger-worn wearable ring device."

Complainants' expert, Dr. Rosing, similarly alleges that a POSA reading the '178 Patent would recognize the claimed internal housing component and external housing component are different structures. *See* RX-0411C at ¶¶ 257-261. But again, Mr. Alarcon will testify that interpretation is incorrect because the '178 Patent discloses multiple embodiments where the internal housing component and the external housing component are connected through a side wall to form a unitary housing. *See* '178 Patent at 20:66-21:1 and Figs. 4, 6, and 16. And again, Dr.

Rosing's position on validity is wholly inconsistent with Dr. Sarrafzadeh's position on infringement. Interpreting the adopted construction of "coupled" as "connected" to require distinct and separate housing components is improper, especially in light of the multiple preferred embodiments with unitary internal and external housing components disclosed in the '178 Patent.

3. Claim [1b]: Niwa; Niwa in view of the POSA's knowledge; and Niwa in combination with Schröder discloses "an internal housing component defining an inner circumferential surface of the finger-worn wearable ring device, the internal housing component coupled with the external housing component, wherein at least a portion of the inner circumferential surface of the internal housing component is configured to contact a tissue of a user when the finger-worn wearable ring device is being worn by the user;"

Claim 1 recites "an internal housing component defining an inner circumferential surface of the finger-worn wearable ring device, the internal housing component coupled with the external housing component, wherein at least a portion of the inner circumferential surface of the internal housing component is configured to contact a tissue of a user when the finger-worn wearable ring device is being worn by the user." Mr. Alarcon will testify that Niwa alone discloses this limitation. Mr. Alarcon will also testify that Niwa in combination with the knowledge of a POSA discloses this limitation. Mr. Alarcon will also testify that Niwa in combination of Schröder discloses this limitation. As explained in this section below, the motivations to combine and expectations of success are the same when combining Niwa with (1) the POSA's knowledge; and (2) Schröder. RX-0003C at ¶¶ 264-275. Furthermore, the motivation to combine and expectations of success are the same for the modifications described for this limitation when combining with the previous modifications described for limitation 1[a] (i.e., combining Niwa with Schröder to render a circumferential surface obvious; and combining Niwa with the POSA's knowledge to render a circumferential surface obvious).

[redacted]

Specifically, Niwa discloses multiple different types of housings, such as "a construction whose finger type housing 40 of the implementation example 2 is formed as a circle completely is illustrated in Fig. 22." RX-0015 at [0204].

FIG.22

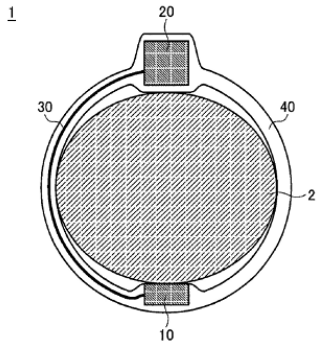

Niwa discloses that "FIG. 26 is a third perspective diagram illustrating a situation where the pulse sensor 1 is worn on the third joint of the finger in accordance with the implementation example 2 of the invention." RX-0015 at [0111]. Niwa shows that this housing 40 includes inner and outer surfaces. Niwa shows another housing, such as in Fig. 26 where the finger ring type housing 40 has an internal housing component (shown in blue below) defining an inner circumferential surface (dark blue). RX-0015 at [0204]. Fig. 26 discloses that the inner and outer surfaces of the finger type housing 40 are circular. And as seen in Fig. 26, the shape of the ring's innermost surface conforms to the circumference of the finger—creating a circumferential surface under the plain and ordinary meaning of "circumferential. *See* JX-0014 at 17 (ALJ concluding that "circumferential" has its plain and ordinary meaning and does not require a closed shape).

[redacted]

FIG.26

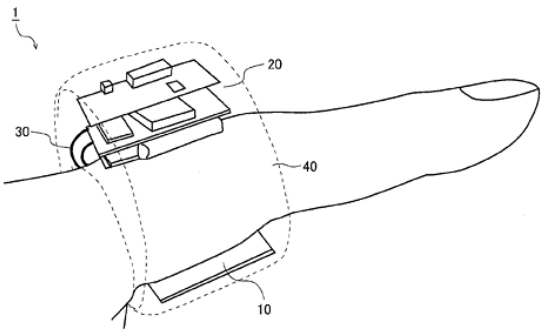

FIG.26

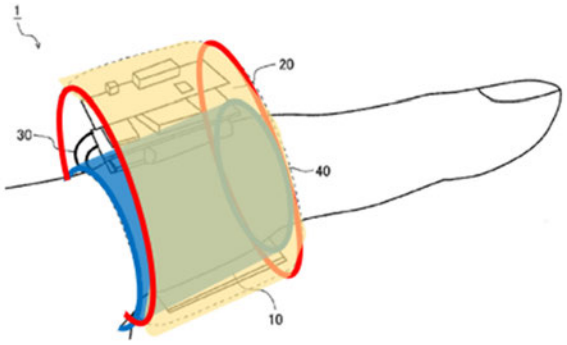

Id. at Fig. 26 (annotations added).

In addition, Niwa's internal housing component or inner wall is a structure that encloses space, in a similar manner as Figures 4, 15, and 16 of the '178 Patent. As seen in Fig. 26, Niwa's finger ring device "includes a first unit to measure the plethysmogram, a second unit to perform a power Supply to the first unit, a finger ring type housing to contain the first unit and the second unit, wherein the first unit is contained within the finger ring type housing to be located at the ball side of the finger when the finger ring type housing is worn on the third joint of the finger, and the second unit is contained within the finger ring type housing to be located at the back side of the finger when the finger ring type housing is worn on the third joint of the finger (i.e., the construction 2-3)." *Id.* at [0029]. And Niwa also includes "a cable [30 below] to connect the first unit and the second unit electrically." RX-0015 at [0062].

Thus, Mr. Alarcon will testify that Niwa discloses an internal housing component defining an inner circumferential surface of the finger-worn wearable ring device, as shown below.

[redacted]

FIG.26

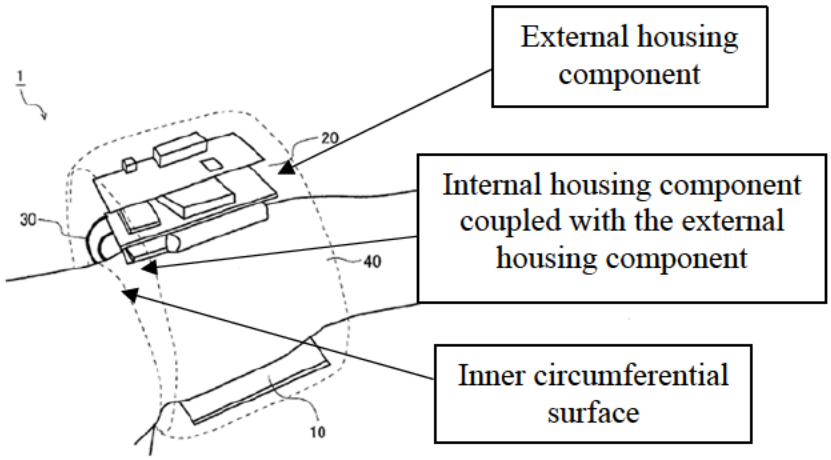

RX-0015 at Fig. 26 (annotations added).

The internal housing component in Niwa is connected to the external housing component by Niwa's side walls. The external housing component is a structure that encloses space that defines an outer circumferential surface, and the internal housing component is a structure that encloses space and defines an inner circumferential surface. *See e.g.*, '178 patent at Figs. 4, 6, 16, and corresponding text. And a cavity exists between them. The internal and external housing components are coupled by the side walls, shown below in green. The POSA also understands that the components needed to be placed into Niwa's housing in some manner, which would involve using various permutations for the housing. A POSA's knowledge about ring housings is also evidenced by Schröder, discussed above.

[redacted]

FIG.26

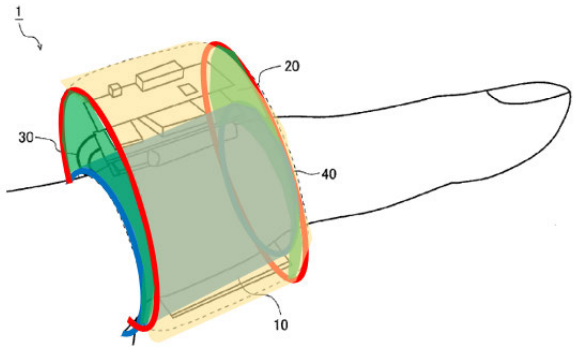

Niwa Fig. 26 (annotated)

To the extent this limitation is not disclosed by Niwa, it would have been obvious to a POSA to couple together two separate and distinct internal and external housing components, depending on the specific design requirements, which would be a simple mechanical change. As described above, the claims, however, only require that the internal and outer housing components that are coupled or connected. *See also* '178 Patent and Figs. 4, 6, and 16. First, there are only a finite number of ways to construct Niwa's finger type housing 40, and it would have been obvious to try the finger type housing 40 as having separate and distinct internal and external components. Second, such a change was within a POSA's knowledge, as evidenced by at least Schröder. *See* Schröder at Figs. 6-10. This also applies in the case that Niwa does not disclose circumferential surfaces (which Niwa does) and is modified to have circumferential surfaces as explained above for limitation 1[a].

Moreover, a POSA would have had an expectation of success in making such a modification because the dimensions of any of the components or finger type housing 40 of Niwa would not have to be modified. And neither would the overall design or function of Niwa. The only modification would have been to manufacture Niwa's external housing component separately

[redacted]

and then couple the two separate components together, which was within a POSA's knowledge, as evidenced by the same modification disclosed by Fig. 8 in Schröder. In fact, Schröder discloses multiple different ways of creating circumferential ring housings using separate housing components—evidencing the simple mechanical nature of doing so. *See* Schröder at Figs. 5-10. This also applies in the case that Niwa does not disclose circumferential surfaces (which Niwa does) and is modified with the teachings of Schröder to have circumferential surfaces as explained above for limitation 1[a].

FIG.26

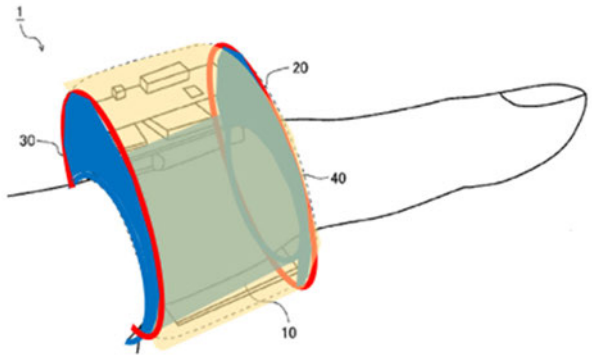

RX-0015 at Fig. 26 (annotations added).

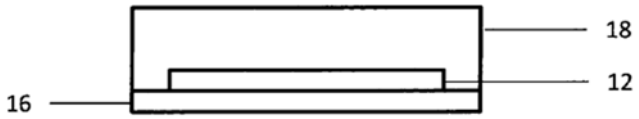

Fig. 8

Schröder at Fig. 8.

[redacted]

Fig. 8

Schröder at Fig. 8 (annotations added).

As depicted above in Schröder's Fig. 8, Schröder discloses a ring cross section with an external housing component, an internal housing component, a first wall, and a second wall. And the first and second walls are substantially perpendicular to one of the external housing component, the internal housing component, or both.

Whether Niwa is combined with Schröder or combined with the POSA's knowledge as evidenced by Schröder—the motivation to form a ring housing using separate components and the expectation of success would be the same.

Oura's expert Dr. Rosing contends that (1) forming ring housings to house internal electric circuits or components was not well-known in the art; and (2) a POSA would not have a reasonable expectation of success combining Schröder with Niwa. RX-0411C at ¶ 263. First, Schröder evinces a POSA's knowledge of forming ring housings to house internal electric circuits. Schröder's internal/external housing configurations—like Niwa's housing—house internal electric circuits, a power source, and even biometric sensors. Alarcon Dep. Tr. at 171:17-173:9. Second, as described above, the only modification required to import the concept of Schröder's separate internal/external housing components to Niwa is manufacturing the cylindrical elements of Niwa as illustrated in Fig. 26 separately from one another and then coupling those components together—*without changing* the layout, design, or dimensions of Niwa or Niwa's components. RX-0003C at ¶ 271. Dr. Rosing does not address this combination. Instead, Dr. Rosing provides

reasons why a POSA would not expect success fitting Niwa's components into the dimensions of Schröder. Dr. Rosing's contentions to importing Niwa's component configurations directly into the ring housings disclosed in Schröder are irrelevant.

Dr. Rosing also contends that disclosures from Niwa would affect a POSA's expectation of success and motivation to combine. For example, she contends that (1) a POSA would be directed away from using Schröder because Niwa discloses an embodiment with a ring opening in Fig. 23; (2) Mr. Alarcon fails to identify how a POSA would use elastic elements in Schröder; and (3) Mr. Alarcon does not address how the housings in Schröder would achieve Niwa's desire to waterproof its housing. RX-0411C at ¶ 264-266. First, Niwa's opening 41 disclosed in Fig. 23 which Dr. Rosing describes as a "potential feature"—is exactly that—just a potential feature disclosed by Niwa. RX-0015 at [0204]; RX-0411C at ¶ 264. Niwa never provides that the opening 41 is required—only that Niwa's ring housing 40 "can be constructed" to have the opening 41. RX-0015 at [0204]. A POSA would not be deterred from importing Schröder's housing configurations to Niwa because of such an optional and unrequired feature. Second, Niwa's disclosure regarding the housing comprising silicon rubber is limited to the embodiment disclosed in Fig. 23 with the opening 41. RX-0015 at [0204]; Alarcon Dep Tr. at 146:7-148:3. And even it were not, a POSA would understand that forming Niwa entirely by silicon through a molding process—although mechanically possible—would damage Niwa's components. Alarcon Dep. Tr. at 150:22-152:1.

Thus, a POSA would understand and be motivated to only form an embodiment like the one disclosed in Fig. 23 with silicon rubber—not the combination proposed by Mr. Alarcon. RX-0003C at ¶ 271. Lastly, Niwa discloses it is "desirable" to make Niwa's housing 40 waterproof. This is not a requirement of Niwa— like the opening 41 in Fig. 23—only a desirable feature. RX-

0015 at [0205]. If anything, this disclosure would have indicated to a POSA that (1) forming various ring housings with different constructions and features was known in the art; and (2) a POSA would understand how to form Niwa's housing with separate components while ensuring the housing is waterproof. This practice was well-known—evinced by Niwa only providing this desire without instruction on how to do so. In other words, Niwa understood a POSA would know how to do so, and thus a POSA would have known how to do so when modifying Niwa to use Schröder's housing configurations.

Claim 1 also recites "wherein at least a portion of the inner circumferential surface of the internal housing component is configured to contact a tissue of a user when the finger-worn wearable ring device is being worn by the user." Mr. Alarcon will testify that Niwa discloses this.

Specifically, Niwa discloses that "the first unit 10 is a unit to measure the plethysmogram mainly, which is contained within the finger ring type housing 40 to be set to the ball side of the finger 2 (i.e., palm side) when the finger ring type housing 40 is worn on the third joint of the third joint of the finger 2" and "according to equipping the first unit 10 disposed at the ball side of the finger (i.e., palm side) which is fleshy and whose fit feeling is fine, the stable measurement of the plethysmogram can be performed." RX-0015 at [0192]. Accordingly, at the very least, Niwa's inner circumferential surface (blue) of Niwa's internal housing component contacts the tissue of the user when Niwa's device is worn by the user to enable measurement of the user's plethysmogram. Indeed, according to Fig. 26, the entire inner circumferential surface of Niwa's internal housing component (blue) is configured to contact the tissue of the user while the ring is worn because the inner circumferential surface wraps around the user's finger entirely like an ordinary finger ring would.

[redacted]

FIG.26

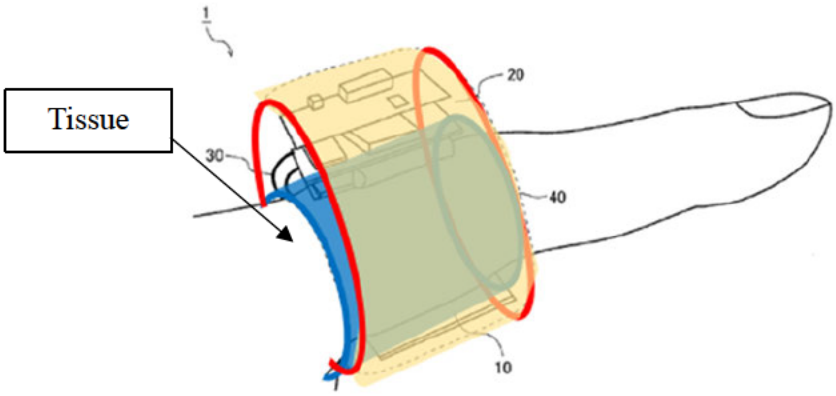

RX-0015 at Fig. 26 (annotations added).

Thus, Mr. Alarcon will testify that Niwa alone discloses this limitation. Mr Alarcon will also testify that, to the extent separate housing components are required (which they are not), Niwa in combination with the POSA's knowledge discloses this limitation. Similarly, Mr. Alarcon will also testify that, to the extent separate housing components are required (which they are not), Niwa in view of Schröder discloses this limitation.

4. Claim [1c]: Niwa discloses "a battery positioned within a cavity formed between the internal housing component and the external housing component, wherein the battery comprises a shape and size configured to fit within the cavity between the outer circumferential surface of the external housing component and the inner circumferential surface of the internal housing component, and wherein the battery extends through at least a first portion of the cavity of the finger-worn wearable ring device;"

Claim 1 recites "a battery positioned within a cavity formed between the internal housing component and the external housing component, wherein the battery comprises a shape and size configured to fit within the cavity between the outer circumferential surface of the external housing component and the inner circumferential surface of the internal housing component, and wherein

the battery extends through at least a first portion of the cavity of the finger-worn wearable ring device." Mr. Alarcon will testify that Niwa alone discloses this limitation. RX-0003C at ¶¶ 276-283. Mr. Alarcon will also testify that the previous modified versions of Niwa also disclose this limitations for the same reasons discussed below.

Niwa discloses "the plethysmogram sensor according to the construction 6-2 includes a first unit to measure the plethysmogram, a second unit to perform a power Supply to the first unit, a cable to connect the first unit and the second unit electrically, and a finger ring type housing to contain the first unit, the second unit, and the cable (i.e., the construction 6-3)." RX-0015 at [0062]. And "[t]he second unit 20 is a unit to supply a power to the first unit 10 mainly. The second unit 20 is contained within the finger ring type housing 40 to be set to the back side of the finger 2 (i.e., back side of the hand) when the finger ring type housing 40 is worn on the third joint of the finger 2." RX-0015 at [0193].

Niwa discloses further that "FIG. 28 is a cross section diagram illustrating a construction example of the second unit 20 of the implementation example 2 schematically. The second unit 20 of this construction example includes the first substrate 21, the power source circuit 22, the memory 23, the battery 24, the charging circuit 25, the connector 26, the second substrate 27, and the wireless communication circuit 28." RX-0015 at [0213]. Niwa states "The battery 24 is a power supply source required to drive the plethysmogram sensor 1, a lithium ion secondary battery or an electrical double layer capacitor can be used appropriately. In this way, with respect to the plethysmogram sensor 1 of battery drive type, there is no need to connect a power supply cable from outside during the measurement of the plethysmogram." RX-0015 at [0217].

Figure 26 shows that Niwa's battery 24 is positioned in a cavity formed between the outer circumferential surface of the external housing component (gold) and the inner circumferential

[redacted]

surface of the internal housing component (blue) because the second unit (including the battery) is covered by the ring housing 40. *See also*, Fig. 22.

FIG.26

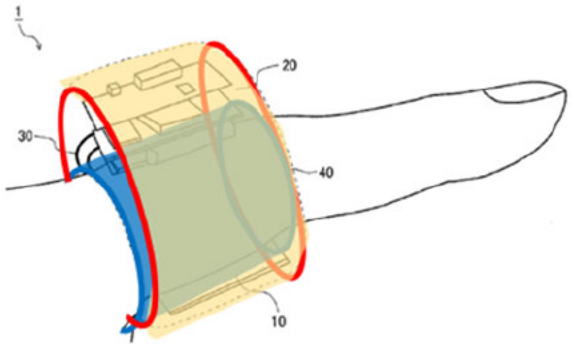

RX-0015 at Fig. 26 (annotations added).

FIG.28

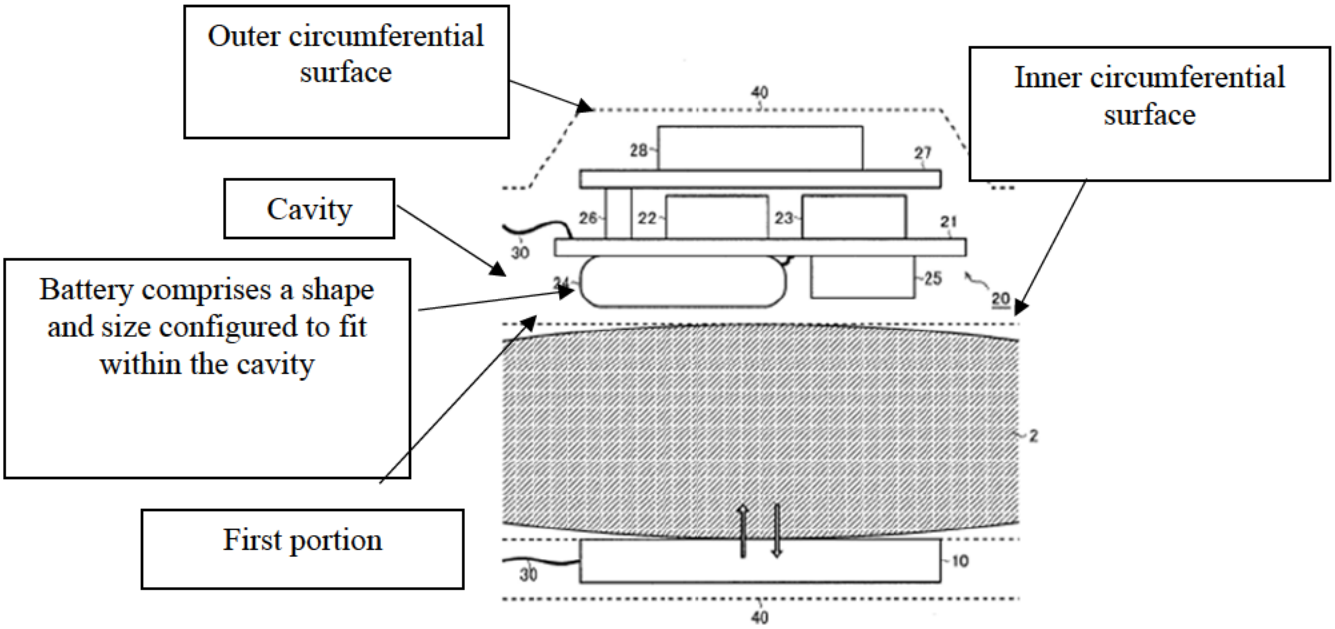

RX-0015 at Fig. 28 (annotated).

A POSA would have understood that there is a cavity – construed to mean a "hollow space" – formed between the internal housing component and the external housing component of Niwa because Niwa places components inside the ring and Niwa does not disclose that it has material other than the components in the ring (and thus there is a "hollow space"). A POSA would have understood in view of Figs. 22-28 and Niwa's disclosure that there is a cavity that surrounds the components and exists independent of the components.

A POSA would have understood that by being disposed between the internal and external housing components, the battery extends through at least a first portion of the cavity and is of a size and shape configured to fit within Niwa's cavity. A POSA would have understood that placing the battery between the internal and external housing components means that the battery is positioned to extend through at least a first portion of the cavity because the cavity is designed to accommodate not only the battery but also other components and parts. A POSA would have understood that this arrangement facilitates efficient connections from the battery in the first portion to other components situated in different portions of the device and allows for optimal power management and enhanced functionality. Additionally, this configuration improves accessibility for replacement or maintenance of the battery (or other components), thereby extending the device's operational life and ease of service.

Oura admits that Niwa discloses a battery. RFA 272 of RX-0326.

Dr. Rosing asserts that Niwa's battery is disclosed between flat surfaces in the Figs. 22 and 28 of Niwa and that, therefore, Niwa does not disclose limitation 1[c]. RX-0411C at ¶ 273. As explained above, Fig. 26 of Niwa discloses the second unit 20 (which contains a battery) in hollow space between circumferential surfaces. Dr. Rosing responds by opining that Fig. 26 of Niwa "fails to indicate the presence of 'shoulders' of the raised portion of the ring surface" and, therefore, Fig.

26 does not disclose a battery between circumferential surfaces. RX-0411C at ¶ 273. But Mr. Alarcon will testify that whether the "shoulders" of Fig. 28 are disclosed or not in Fig. 26 is irrelevant. Because, as he stated in regard to Fig. 22 and Fig. 26 at his deposition, "I think a person of ordinary skill would read both figures -- they would read the entirety of the patent, not just the figures, but they would understand that the implementation of example 2 could have a housing that looks like as indicated in figure 22 or as looks like in figure 26." Alarcon Dep. Tr. at 132:10-15. And he will testify that the same applies to Fig. 28 and Fig. 26 in the case that Fig. 28 discloses "shoulders" not disclosed in Fig. 26. *See also id.* at 132:17-134:8. In other words, differences between the various figures and cross-sections demonstrate to a POSA that Niwa discloses many different designs of its housing 40. *Compare* Figs. 22, 26, 28, 29.

Dr. Rosing additionally opines that because Niwa discloses the battery as "highly flat" then the inner surface along the backside of the finger must also be flat because the advantages of the "highly flat" battery in Niwa would be lost. RX-0411C at ¶ 273 *citing* RX-0015 at [0217]. The "advantages" that Dr. Rosing attributes to Niwa's flat battery are "enhance[ing] the affinity of the plethysmogram sensor 1 when the pulse sensor 1 is on the finger 2, furthermore, the consciousness of the examinee for wearing the plethysmogram sensor 1 can be reduced." RX-0015 at [0217]. Niwa does not provide further disclosure regarding the meaning of "affinity of the plethysmogram sensor 1" when the sensor is worn on the finger—but Niwa does describe the meaning of reducing the "consciousness" of the examinee. *See* RX-0015 at [0206] ("i.e., not let the examinee have an uncomfortable feeling"). And Niwa discloses that to minimize the examinee's consciousness, "it is desirable to restrain the largeness of the first unit 10 and the second unit 20 not to protrude from the third joint of the finger." *Id.*

First, Dr. Rosing's contentions that the inner surface between the battery and the finger *must* be flat to "enhance the affinity of the plethysmogram sensor 1" contradicts the explicit disclosure of an inner circumferential surface in Fig. 26 as described above.

Second, the inner circumferential surface disclosed in Fig. 26 of Niwa does "enhance the affinity" of the sensor 1 even if the battery is flat, because a circumferential inner surface more closely resembles a natural ring with the ring's curved surface hugging the user's finger tissue instead of having only a small surface area of the sensor 1 contacting the user's finger (i.e., the embodiment disclosed in Fig. 22). Fig. 26's inner circumferential surface also provides a more comfortable fit and, therefore, would further "reduce the consciousness of the [user]" while the user wears the sensor 1—an overarching motivation repeated throughout Niwa. *See* RX-0015 at [0197], [0206], [0214], [0217], [0219].

Lastly, to the extent Oura argues that the components shown in Fig. 28 are encapsulated by a material filling the space within the surfaces of ring housing 40 because the components are illustrated as "floating," Mr. Alarcon will testify that the space between the surfaces of the housing 40 and the internal components indicates the thickness of each surface, not because the electronic components are suspended in an encapsulant. Alarcon Dep. Tr. at 153:6-154:14. Moreover, any such argument by Oura would be contradicted by its own infringement allegations against the accused RingConn and Ultrahuman products which, as described in the non-infringement section,

Thus, Niwa alone discloses "a battery positioned within a cavity formed between the internal housing component and the external housing component, wherein the battery comprises a shape and size configured to fit within the cavity between the outer circumferential surface of the external housing component and the inner circumferential surface of the internal housing

[redacted]

component, and wherein the battery extends through at least a first portion of the cavity of the finger-worn wearable ring device." Niwa as previously modified with either Schröder or the POSA's knowledge as described in limitations 1[a] and 1[b] also discloses this limitation for the same reasons above.

5. Claim [1d]: Niwa discloses: "a printed circuit board disposed between the internal housing component and the external housing component, wherein the printed circuit board extends through at least a second portion of the cavity of the finger-worn wearable ring device different from the first portion"

Claim 1 recites: "a printed circuit board disposed between the internal housing component and the external housing component, wherein the printed circuit board extends through at least a second portion of the cavity of the finger-worn wearable ring device different from the first portion." Mr. Alarcon will testify that Niwa discloses this limitation. RX-0003C at ¶¶ 284-290. Mr. Alarcon will also testify that the previous modified versions of Niwa also disclose this limitations for the same reasons discussed below.

Niwa discloses "[t]he first unit 10 is a unit to measure the plethysmogram mainly, which is contained within the finger ring type housing 40 to be set to the ball side of the finger 2 (i.e., palm side) when the finger ring type housing 40 is worn on the third joint of the third joint of the finger 2." RX-0015 at [0192]. The first unit 10 includes a substrate 11, a light sensor 12, an amplifier circuit 14, and a processing circuit 15. RX-0015 at [0200], [0207]. And "[t]he light sensor 12 is equipped to the surface of the substrate 11 directly, the amplifier circuit 14 and the processing circuit 15 are equipped to the back side of the substrate 11 directly. In addition, the cable 30 to establish an electrical connection with the second unit 20 is connected to the substrate 11." RX-0015 at [0208].

Niwa's substrate 11 discloses the claimed PCB because Niwa describes components and circuits that are "mounted" onto the surface of a "substrate." RX-0015 at [0068], [0069], [0213].

[redacted]

A POSA would have understood Niwa's substrate to be a PCB because an "electrical connection" is "established between the surface and the back side of the…substrate…by means of the through hole and via hole." RX-0015 at [0214]. Niwa discloses a PCB inside a finger-ring since Niwa's ring housing 40 utilizes substrates in first unit 10 and second unit 20. RX-0015 at [0194-0195, 0207]. The claimed PCB corresponds to Niwa's substrate because its substrate is a PCB disposed in a cavity formed between the internal and external housing components and connects components and circuits.

FIG.27

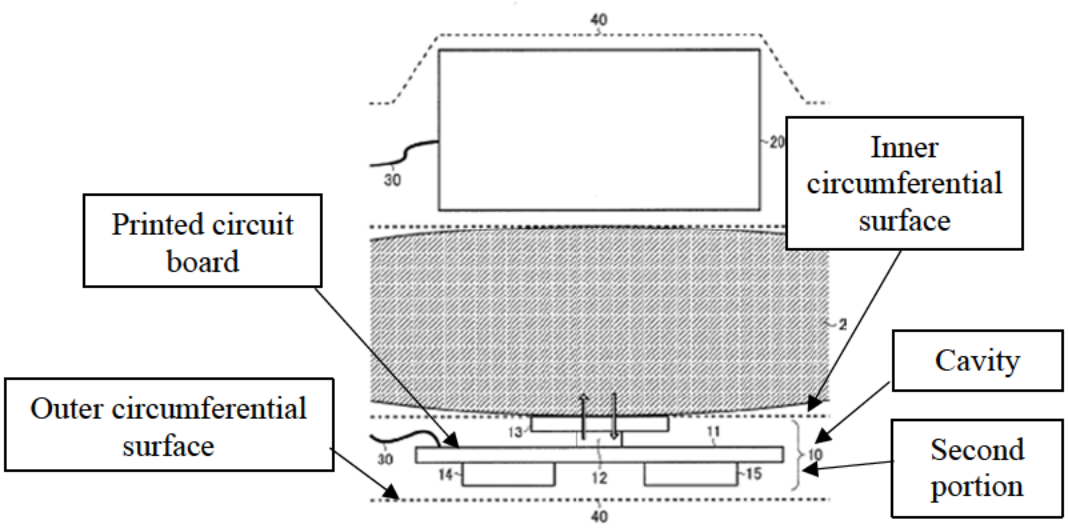

RX-0015 at Fig. 27 (annotations added).

The battery 24 is in the second unit 20 and the PCB 11 is in the first unit 10, which are in different portions of the cavity and do not overlap.

[redacted]

FIG.28

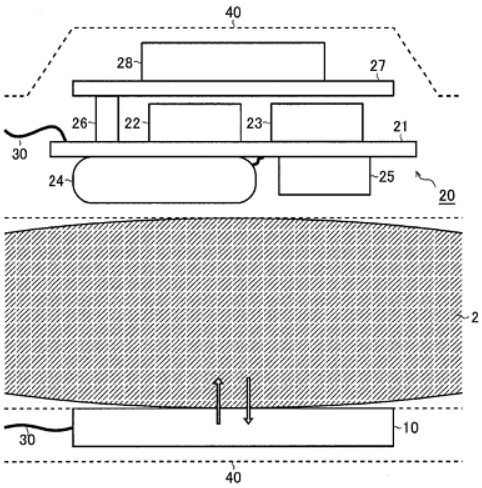

RX-0015 at Fig. 28.

Oura admits that Niwa discloses a printed circuit board. RFA 288 of RX-0326.

A POSA would have understood that by being disposed between the internal and external housing components, the PCB in Niwa is positioned in a cavity by being within the finger ring housing 40. In view of both the battery and the PCB being arranged inside and covered by the finger ring, the cavity provides space for both components and is independent of both components. For example, Figures 24-26 below show a first portion surrounding the second unit 20 which contains battery 24 different than a second portion surrounding first unit 10 which includes the PCB 11. Figs. 24 and 25 show a bundle of wires 30 connecting the first unit 10 and second unit 20. A POSA would have understood that the cavity formed between the internal and external housing components is independent of the wires 30. Thus, first unit 10 and second unit 20 are in different portions of the same cavity because the cavity is continuous starting from the first unit 10 and ending at the second unit 20.

[redacted]

FIG.24

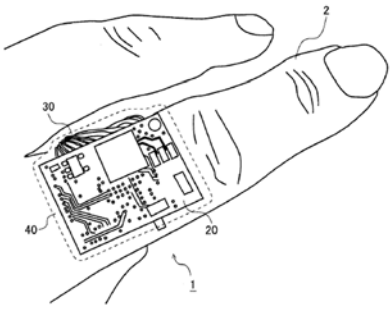

FIG.25

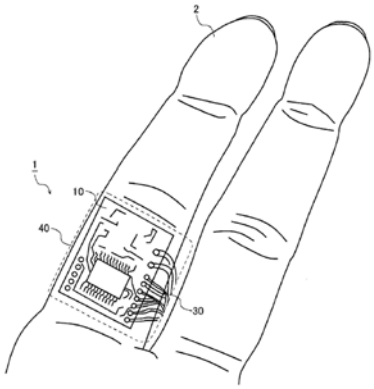

RX-0015 at Figs. 24 and 25.

FIG.26

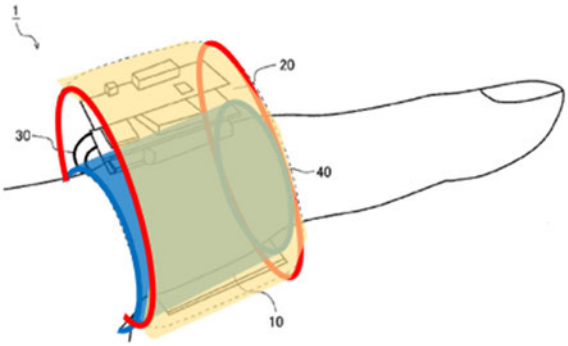

RX-0015 at Fig. 26 (annotations added).

The battery is in the second unit 20 and the PCB is in the first unit 10, which are in different portions of Niwa's cavity. The second unit 20 containing the battery and the first unit 10 containing substrate 11 do no not overlap, as shown in Figure 26. The first unit 10 is depicted on the bottom of the housing facing the inner surface of the finger, and the second unit 20 on top of the outer surface of the finger. As shown in Fig. 26, the first unit 10 is between inner and outer circumferential surfaces.

Dr. Rosing, similar to her limitation 1[c] analysis, contends that the printed circuit board does not extend through a cavity between circumferential surfaces. Dr. RX-0411C at ¶ 277. Dr. Rosing points to Figs. 22 and 27 as support—but does not dispute that Fig. 26 discloses a printed circuit board extending through a second portion of the cavity between circumferential surfaces. *Id.* Notably, Dr. Rosing does not cite Fig. 26. *Id.* Instead, Dr. Rosing imports her reasoning from 1[c] that because the battery is "highly flat" which "enhance[s] 'an affinity of the sensor 1 when the sensor is worn on the finger 2,'" the surface below the battery must be flat and that the surface above the circuit board must also be flat. *Id. citing* RX-0015 at [0217]. As explained above, however, her assertion that the surface is indicated as flat (1) contradicts Fig. 26 disclosing an inner circumferential surface; and (2) an inner surface entirely circumferential would still "enhance the affinity of the senor" and "reduce the consciousness of the [user]."

Niwa as previously modified with either Schröder or the POSA's knowledge as described in limitations 1[a] and 1[b] also discloses this limitation for the same reasons above.

6. Claim [1e]: Niwa discloses: "one or more sensors electrically coupled with the printed circuit board and the battery and configured to acquire data from the user through the internal housing component."

Claim 1 recites: "one or more sensors electrically coupled with the printed circuit board and the battery and configured to acquire data from the user through the internal housing component." Mr. Alarcon will testify that Niwa discloses this limitation. RX-0003C at ¶¶ 291-298. Mr. Alarcon will also testify that the previous modified versions of Niwa also disclose this limitations for the same reasons discussed below.

First, Niwa discloses one or more sensors. Specifically Niwa discloses a plethysmogram sensor, including light emitting portions and light receiving portions: "[m]oreover, to accomplish the aforementioned purpose, the plethysmogram sensor disclosed in this specification includes a light emitting portion whose output intensity is variable, a light receiving portion to detect an

intensity of the lights emitted from the light emitting portion and penetrates the living body of a measured person, and a processing unit to acquire information about the plethysmogram of the measured person based on a measured value provided from the light receiving portion (i.e., the construction 4-1)." *See also* RX-0015 at [0012], [0027], [192].

Second, Niwa's plethysmogram or light sensor is electrically coupled to the PCB. Niwa discloses that "[t]he light sensor 12 is equipped to the surface of the substrate 11 directly, the amplifier circuit 14 and the processing circuit 15 are equipped to the back side of the substrate 11 directly." RX-0015 at [0208]. A POSA would have understood that because the light sensor 12 is "equipped to the surface" of PCB 11 that the light sensor 12 is electrically coupled to the PCB 11.

Third, Niwa discloses that the battery 24 is electrically coupled to the light sensor 12: "[i]n addition, the cable 30 to establish an electrical connection with the second unit 20 is connected to the substrate 11." *Id.* A POSA would have understood that the light sensor 12 is electrically coupled with the battery 24 because the second unit 20 includes the battery 24, the second unit 20 is electrically coupled to the PCB 11, and the PCB 11 is electrically coupled to the light sensor 12 as explained above. *See also id.* at [0194] (disclosing that the first unit 10 (which includes the light sensor 12) is electrically coupled to the second unit 20 (which includes the battery 24) through cable 30). A POSA would have understood that Niwa's sensors are electrically coupled to the printable circuit board and the battery, otherwise Niwa's sensors would not work.

Fourth, Niwa discloses that the light sensor 12 acquires data from the user. For example, Niwa's light sensor 12 acquires plethysmogram data by "detect[ing] the intensity of the light which penetrates the living body by the light receiving portion." *Id.* at [0209]. A POSA would have understood that the living body referenced by Niwa is the user claimed in claim 1. Niwa also

discloses that "[t]he light sensor 12 is a construction both the light emitting portion and the light receiving portion are provided at same side against the finger 2 (i.e., a so-called reflection type, in reference to a full line arrow in FIG. 21)"—further evidencing that the light sensor 12 acquires data from the user (i.e., from the user's finger). *Id.*

Fifth, Niwa discloses that the light sensor 12 acquires the user data through the internal housing component. Niwa discloses a measurement window 13 that the light sensor 12 acquires data through. For example, Niwa discloses that "[t]he light sensor 12 performs the measurement of the plethysmogram (i.e., detection for the emitted light to the finger 2 and a reflected light go back from the finger 2) via this measurement window 13." *Id.* at [0210]. And that "[t]he measurement window 13 is constructed with the translucency portion (i.e., a glass plate or an acrylic plate) which is provided at the light emitting/receiving surface of the light sensor 12." *Id.*

Oura admits that Niwa discloses a sensor and one more LEDs. RFA 293 and 295 of RX-0326.

The measurement window 13, seen below in Fig. 27, is a window through the inner circumferential surface of Niwa's internal housing component. This is in the same manner that the '178 Patent includes windows in its internal housing component. '178 patent at Figs. 4, 15, 16, and corresponding text. Thus, a POSA would have understood that the light sensor 12 acquires data through the internal housing component because the light sensor 12 acquires data through the measurement window 13.

[redacted]

FIG.27

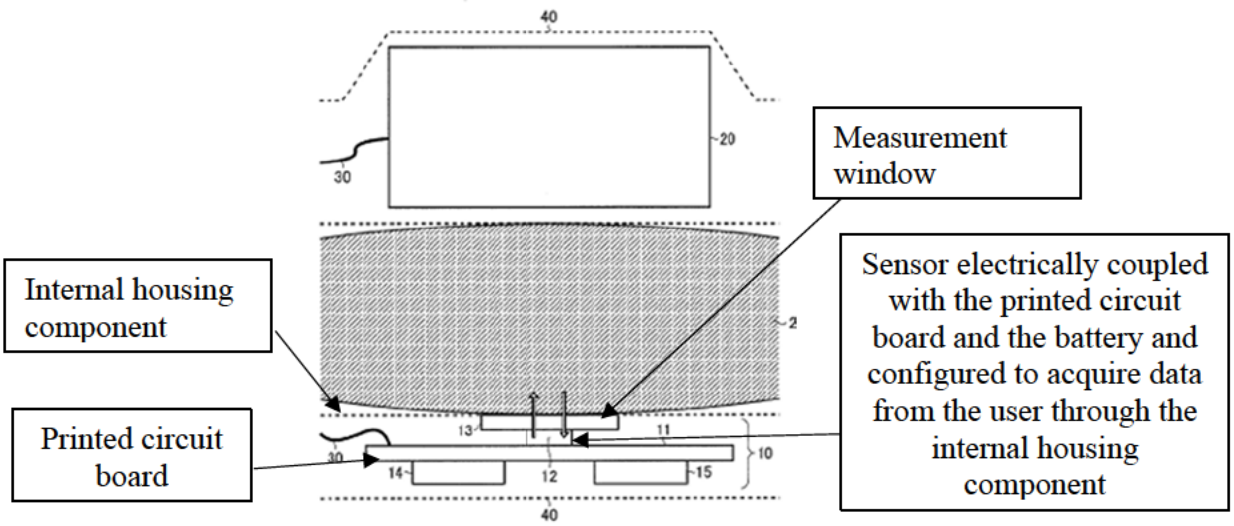

RX-0015 at Fig. 27 (annotations added).

Niwa as previously modified with either Schröder or the POSA's knowledge as described in limitations 1[a] and 1[b] also discloses this limitation for the same reasons above.

7. Claim [2]: Niwa discloses: "The finger-worn wearable ring device of claim 1, wherein the first portion of the cavity of the finger-worn wearable ring device is non-overlapping with the second portion of the cavity of the finger-worn wearable ring device."

Claim 2 recites: "[t]he finger-worn wearable ring device of claim 1, wherein the first portion of the cavity of the finger-worn wearable ring device is non-overlapping with the second portion of the cavity of the finger-worn wearable ring device." Mr. Alarcon will testify that Niwa discloses this limitation. RX-0003C at ¶¶ 299-302. Mr. Alarcon will also testify that the previous modified versions of Niwa also disclose this limitations for the same reasons discussed below.

Niwa discloses that "Niwa's finger ring type housing 40 (disposed upon the wearer's finger 2) includes battery 24 in a first portion of the cavity in second unit 20. Figs. 27 and 28 of Niwa show a battery 24 in a first portion of the cavity in second unit 20 and substrate 11 extending through a second portion of the cavity in first unit 10. RX-0015 at [0193, 0217, 0200, 0207]. And

[redacted]

Niwa's substrate is a PCB as described above in the analysis for claim 1. Thus, Niwa's Figs. 26-28 illustrate a first portion of a cavity with the battery that does not overlap the second cavity portion with the PCB.

Niwa also discloses that "[t]he first unit 10 is a unit to measure the plethysmogram mainly, which is contained within the finger ring type housing 40 to be set to the ball side of the finger 2 (i.e., palm side) when the finger ring type housing 40 is worn on the third joint of the third joint of the finger 2." RX-0015 at [0192]. And "[t]he second unit 20 is a unit to supply a power to the first unit 10 mainly. The second unit 20 is contained within the finger ring type housing 40 to be set to the back side of the finger 2 (i.e., back side of the hand) when the finger ring type housing 40 is worn on the third joint of the finger 2. In this way, by means of locating the second unit 20 which can be a noise source for the first unit 10 from the first unit 10 as far as possible, the measurement accuracy of the plethysmogram can be improved. In addition, an internal construction and an operation of the second unit 20 will be explained in detail later." RX-0015 at [0193].

FIG.26

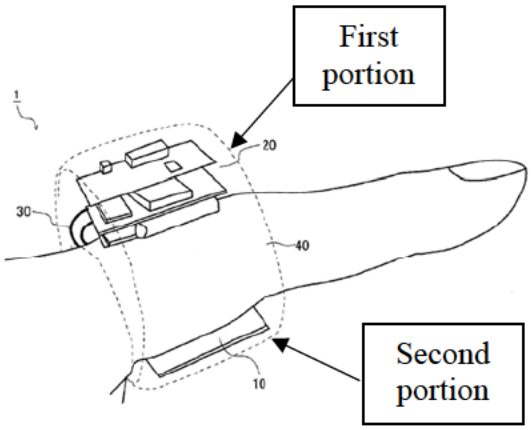

[redacted]

FIG.27

FIG.28

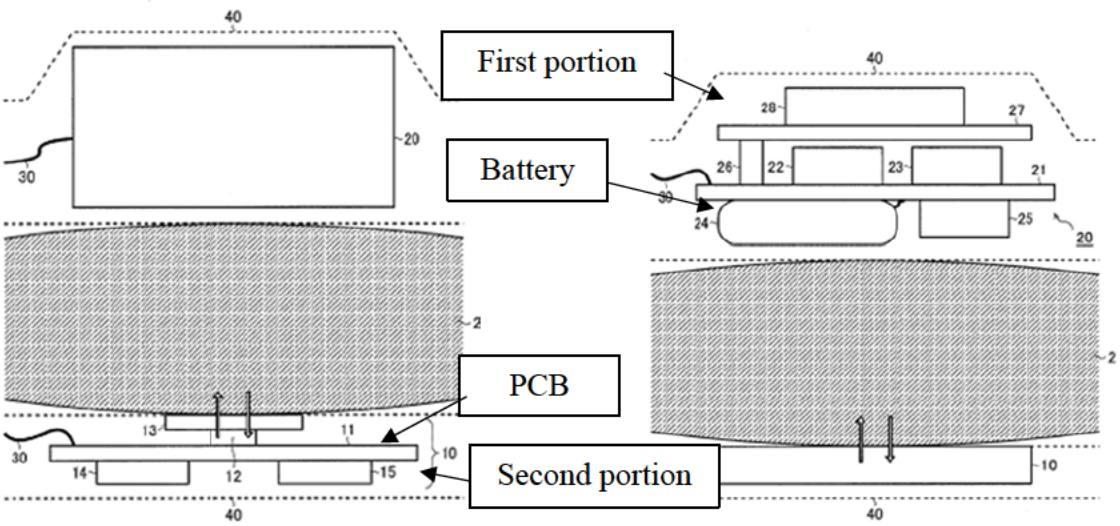

RX-0015 at Figs. 26-28 (annotated).

Niwa's cavity wraps around the finger and the PCB and battery are in different portions of the cavity such that Niwa discloses "wherein the first portion of the cavity of the finger-worn wearable ring device is non-overlapping with the second portion of the cavity of the finger-worn wearable ring device."

Niwa as previously modified with either Schröder or the POSA's knowledge as described in limitations 1[a] and 1[b] also discloses this limitation for the same reasons above.

8. Claim [12]: Niwa in view of the POSA's knowledge; and Niwa in combination with Other References discloses: "The finger-worn wearable ring device of claim 1, wherein the battery comprises a curved battery, wherein an arc of the curved battery approximates a corresponding arc of the external housing component."

Claim 12 states "The finger-worn wearable ring device of claim 1, wherein the battery comprises a curved battery, wherein an arc of the curved battery approximates a corresponding arc of the external housing component." Mr. Alarcon will testify that Niwa in view of the POSA's knowledge discloses this limitation. Mr. Alarcon will also testify that Niwa in combination with

Henderson discloses this combination. Mr. Alarcon will also testify Niwa in combination with Webster discloses this limitation. Mr. Alarcon will also testify Niwa in combination with the GMBPow reference discloses this limitation. RX-0003C at ¶¶ 303-312. The motivations to combine and reasonable expectations of success for adding a curved battery for Niwa is the same regardless of any previous combinations described for limitations 1[a] and 1[b].

Niwa has a battery: "FIG. 28 is a cross section diagram illustrating a construction example of the second unit 20 of the implementation example 2 schematically. The second unit 20 of this construction example includes the first substrate 21, the power source circuit 22, the memory 23, the battery 24, the charging circuit 25, the connector 26, the second substrate 27, and the wireless communication circuit 28." RX-0015 at [0213]. Oura admits that Niwa discloses a battery. RFA 272 of RX-0326.

It would have been obvious in view of a POSA's knowledge or the references discussed below to use a curved battery in Niwa's ring with an arc that approximates the corresponding arc of the external housing component. A POSA would naturally have looked to find a battery that fits inside of Niwa's ring housing and that would include a battery with an arc that approximates the arc of the housing. Using a curved battery is nothing more than ordinary mechanical skill. This would maximize battery capacity while still fitting inside of the housing. A POSA in November of 2013 would have used a curved battery in the housing with an arc that approximated the arc of the external housing component and was a size and shape configured to fit in Niwa's cavity as disclosed by Niwa or as modified (described in limitation 1[c]).

Moreover, Webster discloses a ring 100 including a flexible circuit board 102. The flexible circuit board 102 supports a radio frequency device 200 which includes, among other things, a battery 212. RX-0011 at 1:40-61, 5:8-12. "A battery 212 together with voltage regulation circuitry

[redacted]

can supply the proper voltage to each of the circuit elements. The battery 212 can, in one embodiment, be a thin film lithium ion or zinc-manganese dioxide chemistry battery that can be bent or curved. RX-0011 at 5:8-12. It would have been obvious to use Webster's battery in Niwa because it naturally would have fit inside of Niwa's housing and doing so would increase the battery capacity and life of the device.

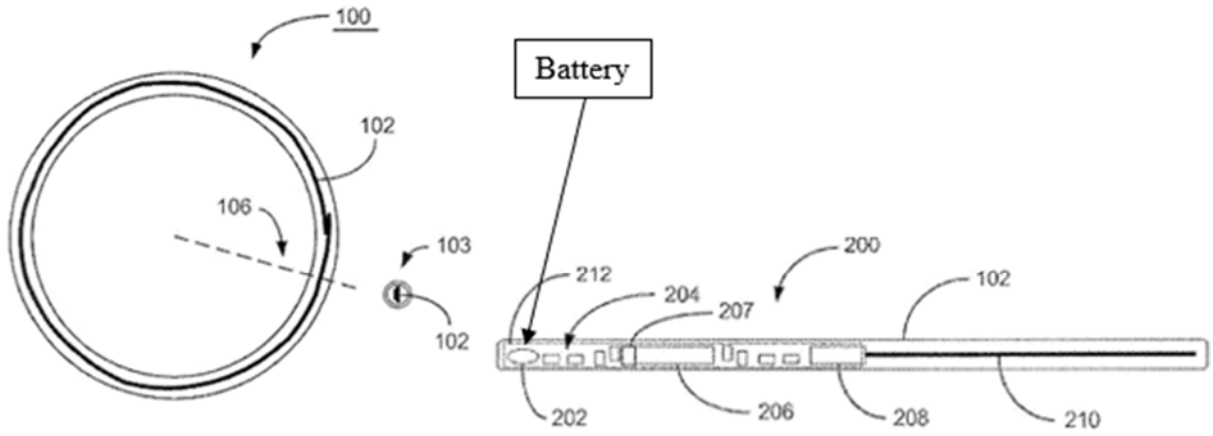

FIG. 1 FIG. 2A

RX-0011 at FIGS. 1 and 2A (annotations added).

Additionally, Henderson is directed to batteries and power management in a ring-shaped activity monitoring device with curved batteries that measures various biometric information. Henderson states that its "batteries 142 have a curvilinear or curved configuration" that "are generally flush with the inner surface 32 of the spine member 22," which is curved. RX-0012 at ¶ [0077]. Henderson also discloses "the device may include one or more functional batteries of a curved profile," and discloses how to make curved batteries. RX-0012 at ¶ [0125]. "Accordingly, the device may include one or more functional batteries of a curved profile." *Id*. A POSA would have understood from Henderson's disclosure that a ring, similar to an oval/bracelet, would "require[] a volume of space allocated to the batteries to also take this curved or radial profile."

[redacted]

Id. It would have been obvious to use Henderson's battery in Niwa because Henderson teaches that its battery can be different sizes and would have naturally contoured to fit inside of Niwa's housing, and doing so would increase the battery capacity and life of the device. RX-0012 at ¶ [0078].

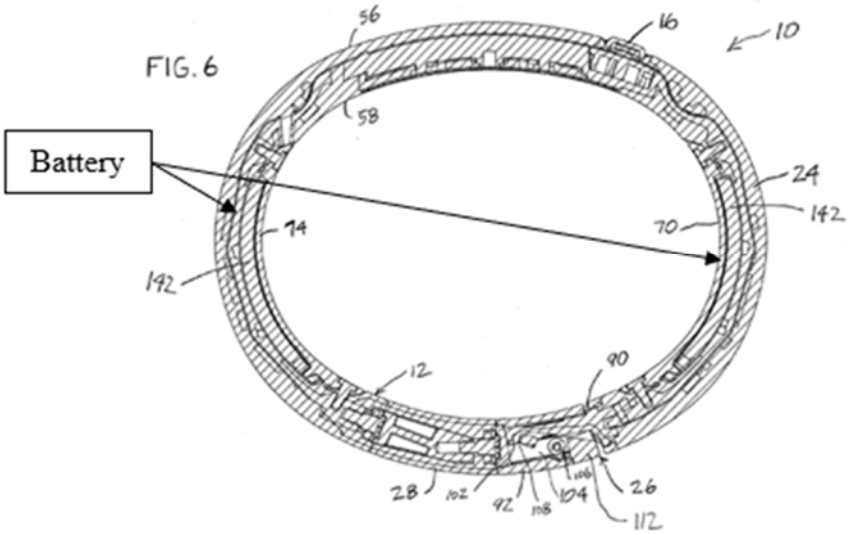

RX-0012 at FIG. 6 (annotations added). A POSA would have understood that the Nike+ FuelBand is the real life embodiment of Henderson, which was filed by Nike. The Nike+ FuelBand was a product that had curved batteries and was released prior to 2013, as evidenced by this 2012 YoutTube teardown. RX-0032.

RX-0032 at 3:18, 3:56.

The '178 Patent explains that the battery "can be any type of battery, such as a rechargeable battery. The battery can be a thin, flexible lithium ceramic chemistry battery. In another example, the battery can be a circular formed lithium polymer or lithium ion battery. The battery can provide power to any of the components described above. In one example, the battery can be a lithium cell integrated directly with the flexible PCB described above. Other implementations can integrate[] the battery directly onto the housing to reduce the volume of space taken up by battery packaging." '178 Patent at 15:12-21. These types of curved batteries disclosed in the '178 were within a POSA's knowledge, as evidenced by at least: GMBPower batteries that were curved and commercially available. RX-0030. Eric Strasser also obtained samples of curved batteries around the time of the earliest claim of priority. RX-0234; RX-0235; RX-0236; and RX-0237.

GMBPower had a Lithium Polymer Battery for sale in on October 21, 2013, that "can be made at clients requirement." RX-0030. The battery was "[b]endable, rechargeable, thin, light, and with long shelf life." The smallest listed lithium curved battery for sale was 2.0 mm thick, 10 mm wide, and 21 mm long. The '178 Patent specification states that "By way of non-limiting example, the WCD interior diameter d1 (the diameter generally defining the ring size) can be in an approximate range of 12 mm to 24 mm so as to accommodate finger sizes ranging from a small child to a larger adult, and on any acceptable finger, including the thumb. The exterior diameter d2 can also be any reasonable size or shape, and can define an approximate range of between 18 mm and 30 mm. Likewise, the thickness between diameters dl and d2 can vary widely, but can typically reside in an approximate range of 1.5 mm to 3 mm. The width WR of the WCD along the direction of finger extension (finger longitudinal direction) is widely variable, and can be selected, in part to accommodate internal and external components. In a non-limiting example, the width WR is in a range of approximately 3 mm to 8 mm." '178 Patent at col. 17:4-18. Thus,

GMBPow batteries were of the correct size to fit inside of finger-worn rings, including that of Niwa, which is of approximate size to the rings described by the '178 patent because both are rings that fit on a finger. It would be obvious and easy to swap out Niwa's battery to connect the GMBPow battery. The only other modification would be to shorten Niwa's PCB slightly to allow for more room for the battery. Both of these changes would be within a POSA's ordinary mechanical skill. A POSA would have been motivated to use a curved battery in Niwa (which batteries were within the knowledge of the POSA, as evidenced by, for instance, Henderson, Webster, and GMBPower) to increase the battery life of Niwa's ring, improving convenience to the user. Specifically, adding a curved battery further spreads out the components around the ring, making for a thinner ring so the ring does not "protrude" vertically from the finger. See RX-0015 at [0206], [0216]. Similarly, a curved battery also would not "protrude" laterally from the finger as it can closely conform to the arc of both the ring housing and the user's finger. *Id*. In other words, the modification of replacing Niwa's battery with a curved battery helps "restrain the largeness" of the second unit so that the ring is more comfortable for the user, as Niwa recognizes is desirable. RX-0015 at [0216].

The curved battery would replace the battery 24 shown in Figure 28 of Niwa, and the length of the battery would extend into and out of the page. Alarcon Dep. Tr. 164:10-16.

Furthermore, a POSA would have been motivated to place a curved battery "wherein an arc of the curved battery approximates a corresponding arc of the external housing component" by simply examining the curved housing and selecting a battery to mirror the size and shape of the curved housing. Eric Strasser, a founder of Motiv, described the obvious nature of developing the battery for the ring:

> Q. And the idea of a curved battery is from the idea that you have a curved housing; is that right?

[redacted]

> A. Correct, we wanted to create a product that looked like a ring.
> Q. And so for a battery to be used in a curved housing, the battery would also need to be curved?
> A. Correct.

E. Strasser Tr. at 191:6-14; *See also id*. at 190:16-23.

Mr. Strasser also testified that others already "knew how to [make the curved battery]" and "they already had the process in place." And that the battery manufacturer "had product that we identified as the solution to what we were looking for," "had the experience of building it," and "they had batteries small enough to fit in a wearable device which could be constructed as a ring" when the inventors approached this company. E. Strasser Tr. at 194:9-14, 205:9-16. To the extent that Oura argues that non-ring devices are inapplicable, the evidence will show that the inventors looked to other devices to find the ultimate battery manufacturer for the inventors' product. E. Strasser Tr. at 195:23-196:7. Eric Strasser and the inventors of the '178 Patent viewed wrist and other wearable devices as analogous prior art. *See* RX-0307C; E. Strasser Tr. at 112:8-16.

Moreover, the '178 patent discloses that the components in the finger-worn device of the '178 Patent were transferable to wrist and arm form factors, demonstrating the analogous nature between wrist and ring wearable technology. "Although the WCD of the present disclosure is depicted as a ring that can be worn on the finger of a user, other shapes, designs, and form factors can be utilized for the WCD. For example, the WCD can be in the form of a wrist band, bracelet, necklace, earring, or any other type of wearable accessory. In this regard, references to the finger of a user in the present application can be considered to apply to other portions of a human body depending on the form of the WCD, such as wrist, neck, ear, etc." '178 Patent at 8:66-9:7. Thus, the '178 Patent itself explains that teachings from other wearables are applicable to the batteries in a finger-worn wearable ring device.

Dr. Rosing opines that because Niwa discloses a "highly flat" battery and an alternate configuration in Fig. 29 where the backside of the PCB directly above the finger is "designed as flat," the inner surface of the ring itself is flat. Rosing at ¶ 288. Dr. Rosing opines that these disclosures "indicate to a POSA that it was desirable to have the battery and other circuitry present in flat surfaces." *Id.* And thus, in Dr. Rosing's view, a POSA would not have been motivated to include a curved battery because Niwa's battery location was "intentionally, not curved." *Id.*

But this contradicts the fact that Fig. 26 of Niwa discloses the battery (of second unit 20) located between circumferential surfaces. In addition, as stated above, Niwa discloses that having either the PCB or battery as flat "enhanc[es] the affinity of the sensor 1" to the user during wear, and reduces the consciousness of the user (i.e., makes the ring more comfortable) during wear. RX-0015 at [0217] and [0206]. But having an inner circumferential surface, as illustrated in Fig. 26, does enhance the affinity of the sensor 1 to the user's finger by allowing the inner surface of the ring to hug the contour of the user's finger enabling a more comfortable and natural fit than the ring housing 40 inner surface shapes disclosed in Fig. 22. *Compare* RX-0015 at Fig. 26 *with* Fig. 22. And using a curved battery that resembles the arc of the curved inner surface illustrated in Fig. 26 would further enhance that affinity by also having the battery mirror the arc of the user's finger.

Dr. Rosing also contends that is not clear that the above curved batteries would increase the battery life in Niwa. RX-0411C at ¶¶ 290-292. But a POSA would have understood that the arc of a curved battery allows for more battery surface area while taking up the same lateral space that an equivalent flat battery would—directly resulting in more capacity and battery life. Dr. Rosing also contends it is not clear that the above batteries (e.g., those disclosed in Henderson and Webster) would fit in a finger-worn wearable ring device. RX-0411C at ¶¶ 290-293. But the above

disclosures (specifically Henderson, Webster, and the Nike Fuel Band) simply provide examples of curved or flexible batteries and show that those batteries existed prior to November 2013. And a POSA would have understood that because those batteries existed, the technology existed, and that sizes appropriate for a ring of those batteries would be out in the marketplace, too. Alarcon Dep. Tr. at 100:2-101:3. Indeed, Mr. Alarcon will provide an example that would fit in a finger ring (according to the '178 Patent)—the GMBPow described above. RX-0003C at ¶¶ 100-102. This battery also is a sufficient thickness for Niwa and would provide sufficient capacity for a wearable ring device. *See* RX-0015 at [0201] (defining the thickness of the battery 24 between 3 and 5 mm); '178 Patent at Fig. 4 (disclosing battery capacity of 10 mAh); Twiss Dep. Tr. at 161:20-23 ("From there we determined that our minimum battery capacity needed to be in the 18 to 20 milliamp range").

The above motivation and expectations of success for the various curved battery references also applies in the cases that (1) Niwa does not disclose circumferential surfaces (which Niwa does) and is modified to have circumferential surfaces with the teachings of Schröder as explained above for limitation 1[a]; and (2) Niwa does not disclose entirely seperate housing components (which is unnecessary according to the '178 Patent) and is modified to have them either with the POSA's knowledge or with the teachings of Schröder as explained above for limitation 1[b]. Any potential modification or combination would not affect a POSA's motivation to add a curved battery or a POSA's expectation of success in adding a curved battery.

[redacted]

9. Claim [13]: Niwa discloses: "The finger-worn wearable ring device of claim 1, wherein the one or more sensors comprise a first light-emitting component configured to emit light associated with a first wavelength, and a second light-emitting component configured to emit light associated with a second wavelength different from the first wavelength."

Claim 13 states: "The finger-worn wearable ring device of claim 1, wherein the one or more sensors comprise a first light-emitting component configured to emit light associated with a first wavelength, and a second light-emitting component configured to emit light associated with a second wavelength different from the first wavelength." Mr. Alarcon will testify that Niwa discloses this limitation. RX-0003C at ¶¶ 313-318. Mr. Alarcon will also testify that the previous modified versions of Niwa also disclose this limitations for the same reasons discussed below.

Niwa discloses that "FIG. 3 is a schematic diagram illustrating a construction example of the plethysmogram sensor in accordance with the invention. With respect to the plethysmogram sensor in accordance with this construction example, both the light emitting portion and the light receiving portion are not provided at the opposite side against the fingertip each other (i.e., a so-called penetration type, in reference to a broken line arrow in FIG. 1). The plethysmogram sensor has a construction both the light emitting portion and the light receiving portion are provided at same side against the fingertip (i.e., a so-called reflection type, in reference to a full line arrow in FIG. 1). Furthermore, as illustrated in FIG. 3, the plethysmogram sensor includes a single light receiving portion PD (i.e., a photo diode or a photo transistor) and eight light emitting portions LED1 to LED8 (i.e., a light emitting diode) equally spaced from one another and placed on a circumference with a central focus on the light receiving portion PD. In addition, in the following explanation, each output intensity of the light emitting portions LED1 to LED8 is denoted as I1 to I8, and each output wave length of the light emitting portions LED1 to LED8 is denoted as λ1 to λ8. In addition, as not illustrated explicitly in FIG. 3, the plethysmogram sensor in accordance with

the invention includes a CPU [Central Processing Unit] to perform the light emitting control of the light emitting portions LED1 to LED8, the light receiving control of the light receiving element PD, and various kinds of signal processing for the measured value acquired by the light receiving element PD. Furthermore, the number of the light emitting portions is simply an example, a number other than eight can be adopted." RX-0015 at [0120].

FIG.3

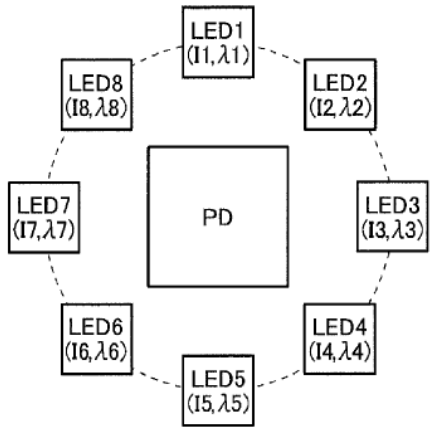

RX-0015 at Fig. 3.

Niwa discloses that "FIG. 8 is a flow chart illustrating a fifth measurement operation which uses the plethysmogram sensor in FIG. 3. As a prerequisite to perform the fifth measurement operation, each output intensities I1 to I8 of the light emitting portions LED1 to LED8 is set as the constant value I in common, output wave lengths λ1 to λ8 are values different from one another (i.e., from a visible light region to a near-infrared region). In addition, as the output wave lengths λ1 to λ8, although the wave lengths which are equivalent to the light colors of blue, green, yellow, and orange are favorable, a detailed explanation about this is described below." RX-0015 at [0147].

[redacted]

Niwa discloses that "By means of emitting the light from the light emitting portion to the third joint of the finger 2 and detect the intensity of the light which penetrates the living body by the light receiving portion, the light sensor 12 acquires the plethysmogram data." RX-0015 at [0209].

Niwa discloses that the light sensor 12 includes light emitting portions (e.g., LED1 to LED8) configured to output wave lengths λ1 to λ8, which are values different from one another (i.e., from a visible light region to a near-infrared region). RX-0015 at [0147], [0155], [0161], [0170]. The battery is connected to the sensors via cable 30 and the PCB 11 to power the sensors. RX-0015 at [0208].

FIG.27

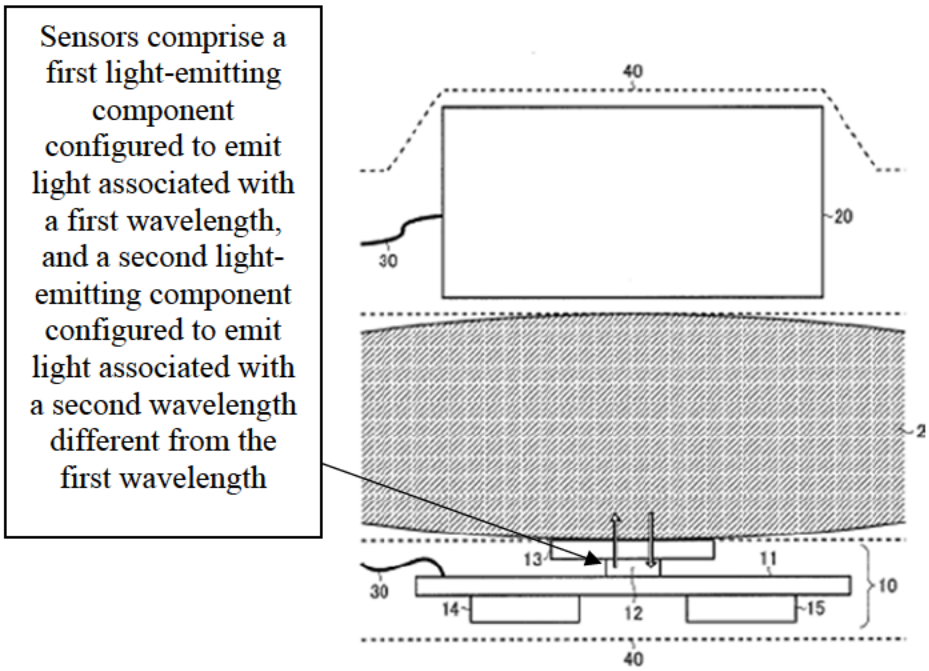

RX-0015 at Fig. 27 (annotated).

Thus, Mr. Alarcon will testify that Niwa discloses this limitation. Niwa as previously modified with either Schröder or the POSA's knowledge as described in limitations 1[a] and 1[b] also discloses this limitation for the same reasons above.

[redacted]

10. Claim [14]: Niwa discloses: "The finger-worn wearable ring device of claim 13, wherein the first wavelength is associated with visible light, and wherein the second wavelength is associated with infrared light."

Claim 14 states "The finger-worn wearable ring device of claim 13, wherein the first wavelength is associated with visible light, and wherein the second wavelength is associated with infrared light." Mr. Alarcon will testify that Niwa alone discloses this limitation. RX-0003C at ¶¶ 319-321. Mr. Alarcon will also testify that the previous modified versions of Niwa also disclose this limitations for the same reasons discussed below.

Niwa discloses a first light-emitting component that emits visible light, and a second light-emitting component that emits near-infrared light, which is a type of infrared light. The "output wave lengths" from Niwa's LEDs range "from a visible light region to near-infrared region." RX-0015 at [0147]. And Niwa's first unit 10's light-emitting portion can include "LED1 to LED8" with "output wave lengths λ1 to λ8…different from one another." RX-0015 at [0147]. A POSA would have understood that first wavelength λ1 from first light-emitting component (LED1) is associated with visible light. A POSA would have understood that near-infrared is part of the infrared spectrum. Using infrared light in biometric PPG sensors was also well-known in the art. Niwa as previously modified with either Schröder or the POSA's knowledge as described in limitations 1[a] and 1[b] also discloses this limitation for the same reasons above.

11. Claim [17]: Niwa; Niwa in view of the POSA's knowledge; and Niwa in combination with Schröder discloses: "The finger-worn wearable ring device of claim 1, wherein the external housing component and the internal housing component define the cavity configured to at least partially surround the battery, and the printed circuit board, wherein one of the external housing component or the internal housing component comprises: a first side wall and a second side wall that extend between the internal housing component and the external housing component, wherein the cavity is defined at least in part by the outer circumferential surface, the inner circumferential surface, the first side wall, and the second side wall."

Claim 17 states "The finger-worn wearable ring device of claim 1, wherein the external housing component and the internal housing component define the cavity configured to at least partially surround the battery, and the printed circuit board, wherein one of the external housing component or the internal housing component comprises: a first side wall and a second side wall that extend between the internal housing component and the external housing component, wherein the cavity is defined at least in part by the outer circumferential surface, the inner circumferential surface, the first side wall, and the second side wall." Mr. Alarcon will testify that Niwa alone discloses this limitation. Mr. Alarcon will also testify Niwa in combination with the POSA's knowledge discloses this limitation. Mr. Alarcon will also testify that Niwa in combination with the Schröder discloses this limitation. RX-0003C at ¶¶ 322-323. The motivation to combine and expectations for success for combining Niwa with the POSA's knowledge or with Schröder would be the same for either combination—and would be the same as the modifications described for limitation 1[a] and 1[b].

Niwa discloses that the housing 40 defines a cavity that at least partially surrounds the first unit 10 and the second unit 20. RX-0015 at [0195]. Niwa states "FIG. 24 to FIG. 26 are perspective diagrams illustrating a situation where the pulse sensor 1 of the implementation example 2 is worn on a third joint of the finger respectively. In addition, FIG. 24 is a see through illustration to see the plethysmogram sensor 1 from the back side of the hand, FIG. 25 is a see through illustration

[redacted]

to see the plethysmogram sensor 1 from the palm side of the hand, and FIG. 26 is a see through illustration to see the plethysmogram sensor 1 from the side. As illustrated in these diagrams, to not let the examinee have a consciousness for wearing the plethysmogram sensor 1 (i.e., not let the examinee have an uncomfortable feeling), it is desirable to restrain the largeness of the first unit 10 and the second unit 20 not to protrude from the third joint of the finger 2." RX-0015 at [0206]. Niwa includes side walls in its housing 40. Those side walls are part of the external housing component and are connected to the internal housing component.

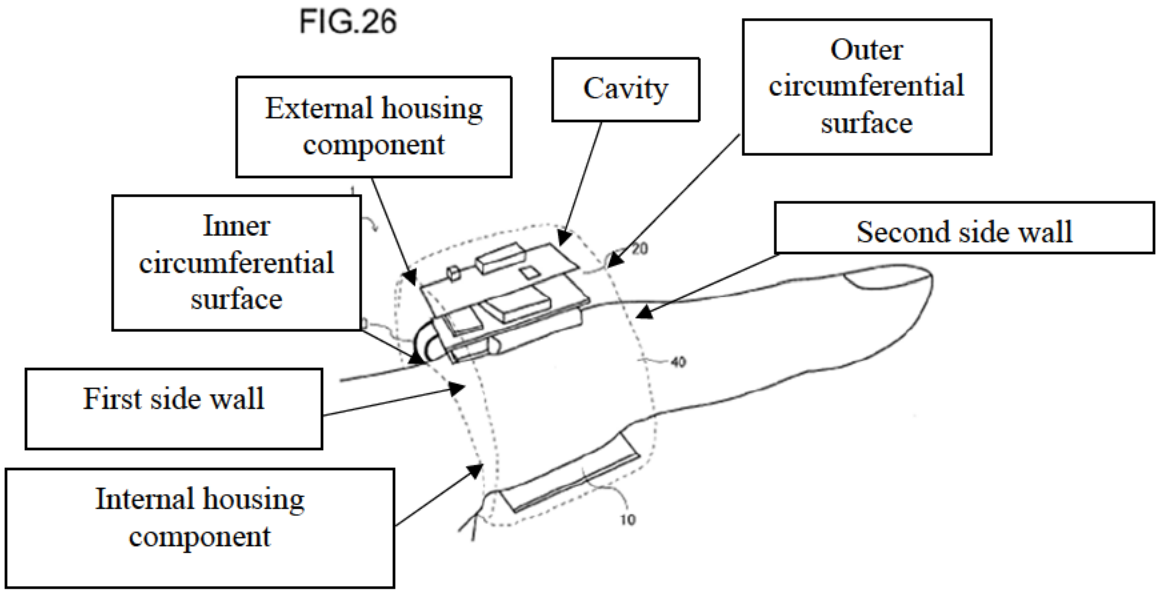

RX-0015 at 26 (annotated).

[redacted]

FIG.26

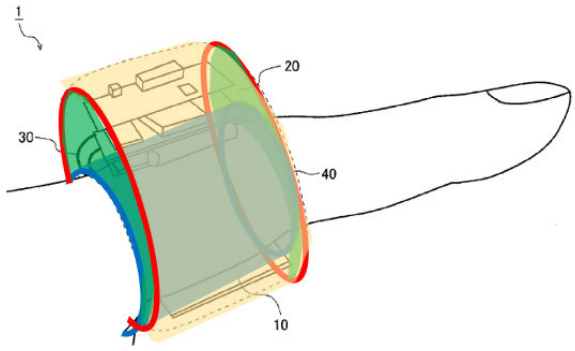

RX-0015 at Fig. 26 (annotated). Thus, Niwa discloses this limitation. A POSA would have understood that the side walls, outer circumferential surface and inner circumferential surface define the cavity.

Dr. Rosing contends that Mr. Alarcon did not identify whether the sidewalls are present on either the internal or external housing component. RX-0411C at ¶ 303. But Mr. Alarcon disclosed in his report and will testify that a POSA would understand Niwa discloses the side walls (above in green) could be part of either Niwa's internal housing component or external housing component. RX-0003C at ¶ 269. To the extent Niwa does not explicitly disclose whether the side walls are a part of the internal housing component or external housing component, it would have been within a POSA's knowledge to try multiple permutations as disclosed in, for instance, Schröder. RX-0003C at ¶ 270. And Mr. Alarcon provides an example where the side walls are a part of the internal housing component—mirroring the internal/external component configuration disclosed in Schröder. RX-0003C at ¶ 271. This modification along with the motivation to do so and expectations for success was described previously for claim limitations 1[a] and 1[b] above. And the same motivations and expectations of success for this limitation apply to Niwa alone,

Niwa as previously modified with Schröder, and as previously modified with the POSA's knowledge, and any combination thereof.

Niwa's side walls (shown in green above), its internal housing component and its external housing component define the cavity where the units 10 and 20 are contained that at least partially surround the claimed printed circuit board (in unit 10) and claimed battery (in unit 20). This would not change whether the walls are part of the internal housing component or external housing component either.

12. Claim [18]: Niwa; Niwa in view of the POSA's knowledge; and Niwa in combination with Schröder discloses: "The finger-worn wearable ring device of claim 17, wherein the first side wall, the second side wall, or both, are substantially perpendicular to the inner circumferential surface, the outer circumferential surface, or both."

Claim 18 states "The finger-worn wearable ring device of claim 17, wherein the first side wall, the second side wall, or both, are substantially perpendicular to the inner circumferential surface, the outer circumferential surface, or both." Mr. Alarcon will testify that Niwa discloses this limitation. Mr. Alarcon will also testify that Niwa as modified with the POSA's knowledge in claim 17 discloses this limitation. Mr. Alarcon will also testify that Niwa as modified with Schröder in claim 17 discloses this limitation. RX-0003C at ¶¶ 324-325.

Niwa discloses that the housing 40 side walls are substantially perpendicular to the inner circumferential surface and the outer circumferential surface. Niwa states "FIG. 24 to FIG. 26 are perspective diagrams illustrating a situation where the pulse sensor 1 of the implementation example 2 is worn on a third joint of the finger respectively. In addition, FIG. 24 is a see through illustration to see the plethysmogram sensor 1 from the back side of the hand, FIG. 25 is a see through illustration to see the plethysmogram sensor 1 from the palm side of the hand, and FIG. 26 is a see through illustration to see the plethysmogram sensor 1 from the side. As illustrated in these diagrams, to not let the examinee have a consciousness for wearing the plethysmogram

[redacted]

sensor 1 (i.e., not let the examinee have an uncomfortable feeling), it is desirable to restrain the largeness of the first unit 10 and the second unit 20 not to protrude from the third joint of the finger 2." RX-0015 at [0206]. Niwa includes side walls in its housing 40.

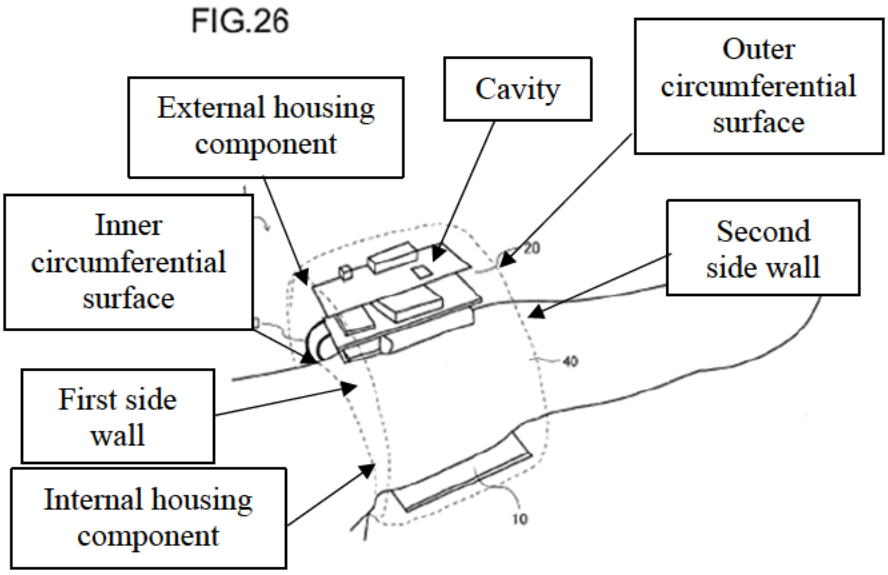

RX-0015 at 26 (annotated). No matter how Niwa is modified in claim 17 to meet claim 17, the side walls shown above in Niwa would be substantially perpendicular to the internal and external housing components. And if Niwa is not modified at all, the side walls of Niwa still remain substantially perpendicular to the internal and external housing components.

H. Schröder Anticipates; and Schröder Renders Obvious in view of Other References the Asserted Claims

Schröder anticipates; and Schröder renders obvious in view of Wissmar asserted claim 1.

[redacted]

1. Claim [1-pre]: Schröder discloses "[a] finger-worn wearable ring device, comprising:"

The preamble of claim 1 recites: "[a] finger-worn wearable ring device, comprising." The parties have agreed and the ALJ has adopted that the preamble is limiting. JX-0014. Mr. Alarcon will testify that Schröder discloses this limitation. RX-0003C at ¶¶ 326-327.

Specifically, Schröder discloses "[a] further advantageous embodiment example of the invention is that the external secure unit is a finger-ring which consists of at least two components, with an electronic component being inserted into at least one component. This has the advantage that the external secure unit can be always taken along with one." Schröder at 2:60-65.

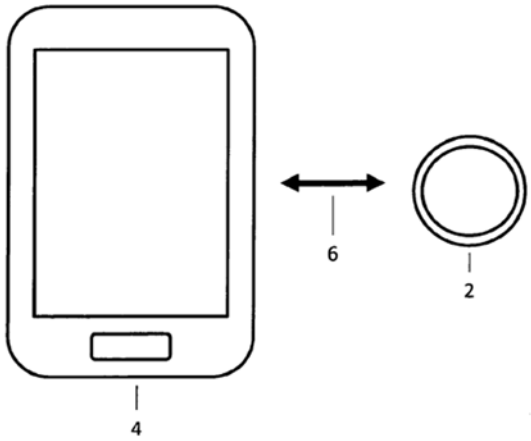

Fig. 1

Schröder at Fig. 1.

2. Claim [1a]: Schröder discloses "an external housing component defining an outer circumferential surface of the finger-worn wearable ring device;"

Claim 1 recites "an external housing component defining an outer circumferential surface of the finger-worn wearable ring device." Mr. Alarcon will testify that Schröder discloses this limitation. RX-0003C at ¶¶ 328-330.

"The finger-ring 2 consists of two ring halves 16 and 18." Schröder at 12:7-9. Figure 4 shows that ring half 18 is the claimed external housing component that defines an outer

[redacted]

circumferential surface of the finger-worn wearable ring device because it is the side of Schröder's "finger-ring" that is exposed to the outside environment. This outer surface is circumferential under the plain and ordinary meaning of circumferential. Further, Figure 4 of Schröder discloses an inlay 12 between an internal housing component and an external housing component.

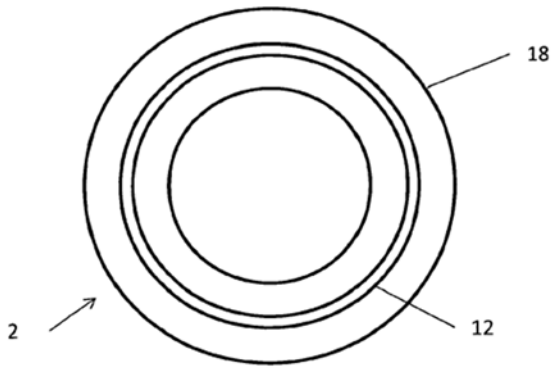

Fig. 4

Schröder at Fig. 4.

As discussed below with respect with claim [1c] and [1d], a POSA would have understood that the inlay 12 does not take up the entire recess between the housing components and it would have been obvious to make additional room for the components such that there would be space. Thus, Schröder satisfies this limitation.

3. Claim [1b]: Schröder discloses "an internal housing component defining an inner circumferential surface of the finger-worn wearable ring device, the internal housing component coupled with the external housing component, wherein at least a portion of the inner circumferential surface of the internal housing component is configured to contact a tissue of a user when the finger-worn wearable ring device is being worn by the user"

Claim 1 recites "an internal housing component defining an inner circumferential surface of the finger-worn wearable ring device, the internal housing component coupled with the external housing component, wherein at least a portion of the inner circumferential surface of the internal housing component is configured to contact a tissue of a user when the finger-worn wearable ring

[redacted]

device is being worn by the user." Mr. Alarcon will testify that Schröder discloses this limitation. RX-0003C at ¶¶ 331-337.

Specifically, Schröder discloses that "[t]he finger-ring 2 consists of two ring halves 16 and 18." Schröder at 12:7-8. Fig. 4 shows ring half 16 is the internal housing component defining an inner circumferential surface of the finger-worn wearable ring device because it is the inside ring that contacts the user's skin. And the inner surface is circumferential under the plain and ordinary meaning of "circumferential."

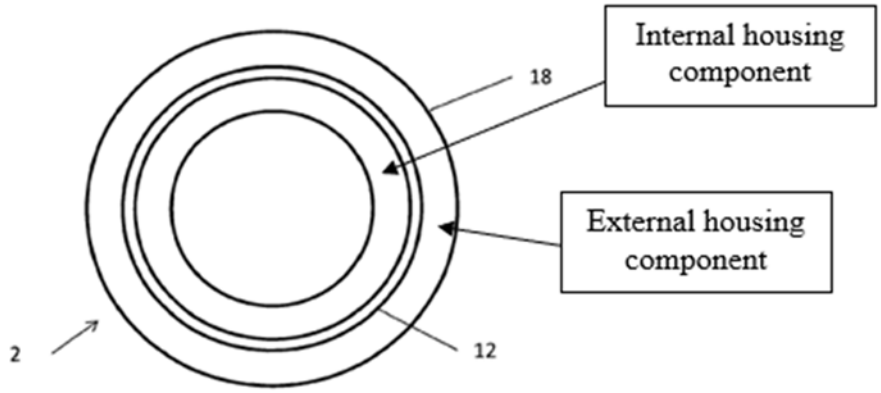

Fig. 4

Schröder at Fig. 4.

"The components 16, 18 of the finger-ring 2 are interconnected by a suitable technology, e.g. by plugging, gluing, screwing, crimping, etc." Schröder at 12:20-22. As discussed below with respect with claim [1c], a POSA would have understood that the inlay 12 does not take up the entire recess between the housing components and it would have been obvious to make additional room for the components such that there would be space. Thus, Schröder discloses this limitation.

Fig. 5 shows the components 16 and 18 abutting each other to form the "finger-ring."

[redacted]

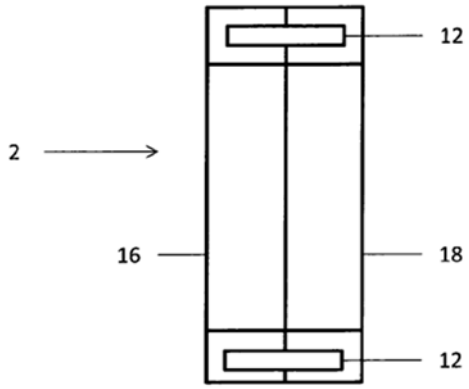

Fig. 5

Schröder at Fig. 5.

Schröder's Figures 6-10 also "show different cross sections through a finger-ring 2, consisted of ring-shaped components 16, 18 of the finger-ring 2 and of an inlay 12." Schröder at 12:43-45. These figures show various examples of internal housing components connected with external housing components. Figures 6 and 8 are shown below as examples. To the extent Fig 5. depicts components 16 and 18 as top and bottom halves, then Figs. 6-10 cross sections illustrate internal/external components forming inlay 12. A POSA would have understood that Figs. 6-10 illustrate internal and external components because they are on top and bottom of in Fig. 5 components 16 and 18 are shown to the left and right of inlay.

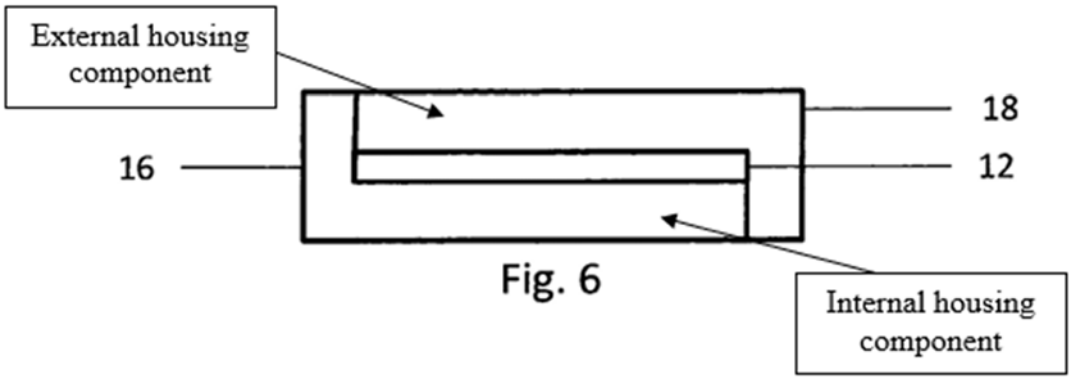

Fig. 6

Schröder at Fig. 6 (annotations added).

[redacted]

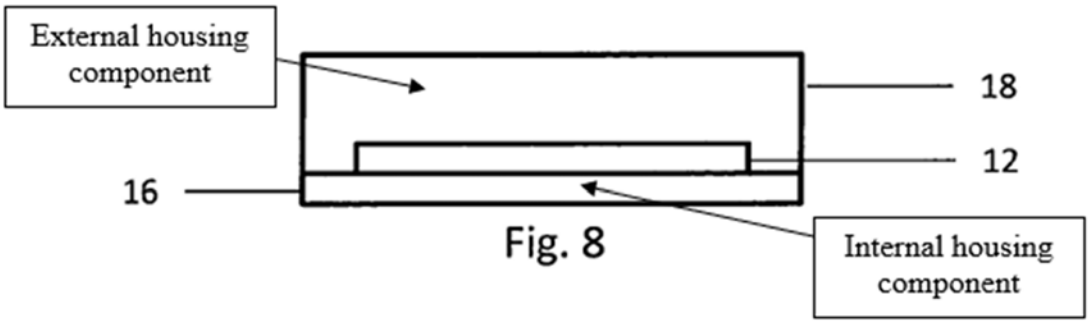

Fig. 8

Schröder annotated Fig. 8.

A POSA would also have understood that in cross sections shown in Figs. 6-10 components 16 or 18 could be either the internal or external housing component.

Dr. Rosing argues that Figure 4 itself does not disclose internal and external housing components. RX-0411C ¶ 314. But what Mr. Alarcon will explain is that a POSA would have understood that, when looking at the cross sections provided in Figs. 6-10 of Schröder, Figs. 6-10 would have the same cross-section as Fig. 4 but with the ring halves 16 and 18 making up the inner and outer surfaces. Schröder at Figs. 4-10.

Dr. Rosing also contends that "Schröder discloses an alternate architecture entirely." RX-0411C at ¶ 314. Mr. Alarcon will explain why Rosing is incorrect. As shown and described above, the cross sections illustrated in Figs. 6-10 of Schröder disclose internal and external housing components. Dr. Rosing does not cite to or analyze Figures 6-10 of Schröder in her report regarding Schröder disclosing the housing component limitations. RX-0411C at ¶¶ 311-316.

Dr. Rosing also contends that a POSA would not have understood that the inlay 12 does not take up the entire space between Schröder's housing components 16 and 18. RX-0411C at ¶ 315. She contends that "[a]s disclosed in Schröder, the inlay 12 is arranged in the interior of the ring and 'serves as a carrier for at least one antenna coil.'" She continues that "[i]n some embodiments, Schröder discloses that chip module 3 is located in a 'recess' of the finger ring, such

as shown in Fig. 3" And that "[t]his recess can be 'protected against external influences by cover 14." And she concludes that "Schröder does not otherwise disclose other components or materials disposed on inlay 12." Dr. Rosing cites to *only* column 8, lines 56-60 of Schröder to support this conclusion.

That passage of the specification, however, is only applicable to the embodiment illustrated in Fig. 3—not the embodiments of Schröder depicted in Figures 4-10 (which are the focus of Mr. Alarcon's analysis). The discussion of Figures 4-10 does not begin until column 12. *See* Schröder at 12:1-3 ("Figs. 4-10 describe, by way of example, possible variants of an external secure unit 2 in the form of a finger ring 2.") And for that embodiment, Schröder discloses that "[o]n the carrier material there is arranged *at least one* antenna coil 8 and *at least one* chip module 10, with the antenna coil 8 being connected to the chip module 10." Schröder at 12:30-32 (emphasis added). Schröder goes on to disclose that "[b]esides the chip module 10, *at least one* further electronic component can also be located on the carrier [inlay 12], e.g. a display unit or a further antenna coil." Schröder at 12:40-42. Thus, Dr. Rosing's statement that "Schröder does not otherwise disclose other components or materials disposed on inlay 12" is incorrect and contradicts Schröder's specification.

Claim 1 further recites: "wherein at least a portion of the inner circumferential surface of the internal housing component is configured to contact a tissue of a user when the finger-worn wearable ring device is being worn by the user." Mr. Alarcon will explain that Schröder discloses this limitation.

A POSA would have understood that the inner circumferential surface of Schröder's internal housing component contacts the user's tissue when the finger-worn wearable device is being worn.

For example, Schröder discloses that "[t]he finger-ring 2 is worn by a user, e.g., permanently on the finger." Schröder at 3:61-62. And "[s]ince a user wears the external secure unit 2, e.g. the finger-ring 2, directly on his body, he recognizes directly when an action e.g. is performed or has ended." Schröder at 7:38-40

Furthermore, Schröder discloses that "[t]he proposed method is advantageous in that it is very user-friendly, since no smart card has to be taken along or can be forgotten at the terminal, since the external secure unit 2 is continually worn on the body, e.g. on the finger." Schröder at 10:52-56.

4. Claim [1c]: Schröder discloses "a battery positioned within a cavity formed between the internal housing component and the external housing component, wherein the battery comprises a shape and size configured to fit within the cavity between the outer circumferential surface of the external housing component and the inner circumferential surface of the internal housing component, and wherein the battery extends through at least a first portion of the cavity of the finger-worn wearable ring device;"

Claim 1 recites: "a battery positioned within a cavity formed between the internal housing component and the external housing component, wherein the battery comprises a shape and size configured to fit within the cavity between the outer circumferential surface of the external housing component and the inner circumferential surface of the internal housing component, and wherein the battery extends through at least a first portion of the cavity of the finger-worn wearable ring device." Mr. Alarcon will testify that Schröder discloses this limitation. RX-0003C at ¶¶ 343-358.

For example, Schröder discloses "[t]he finger-ring 2 consists of two ring halves 16 and 18. The two ring halves 16 and 18 respectively have a recess into which the inlay 12 is inserted." Schröder at 12:7-9. And that "[t]he inlay 12 can have at least one chip module 10 with at least one antenna coil 8, with at least one further electronic device, e.g. a display, optionally being arranged on the inlay 12." Schröder at 12:62-65.

[redacted]

"The chip module 10 is inserted into a recess of the finger-ring 2." Schröder at 8:58-59. Fig. 7 shows a the recess for inlay 12 and chip module 10 formed between the two housing components 16 and 18.

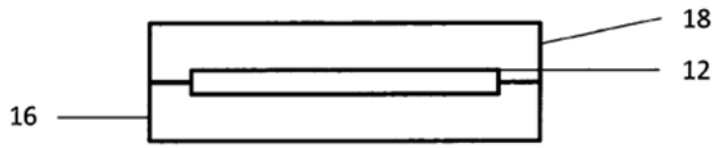

Fig. 7

Schröder at Fig. 7.

A POSA would have understood that Schröder's recess extends all the way around the ring and that there is a cavity in the recess separate from and existing even with Schröder's inlay and battery. Because Schröder contemplates mounting at least one chip module and other electrical components to the inlay 12, a POSA would have understood that the thickness of inlay 12 would not be uniform around the entirety of the ring. And thus, for that reason, the inlay 12 would not fully occupy the space of the recess around the entirety of the ring. Alarcon Dep. Tr. at 172:22-173:9.

And Schröder further discloses that, generally, "[i]n a further embodiment example, the external secure unit 2 has an energy storage device, e.g. an accumulator or a battery. The energy storage device is connected to the chip module 10 in order to supply the chip module 10 with energy outside an electromagnetic field of a reader." Schröder at 11:46-50.

And "[f]urther, the energy storage device can be employed for operating electronic components, such as display units or display elements, and supplying them with energy." Schröder at 11:53-61. It would have been apparent and obvious to a POSA by reading Schröder that because the energy storage unit (i.e., battery) powers chip module 10 and chip module 10 resides in inlay

[redacted]

12, the battery is also positioned inside the ring especially in light of the cavity modification described above. The expanded space would allow for a battery to be positioned inside of the ring.

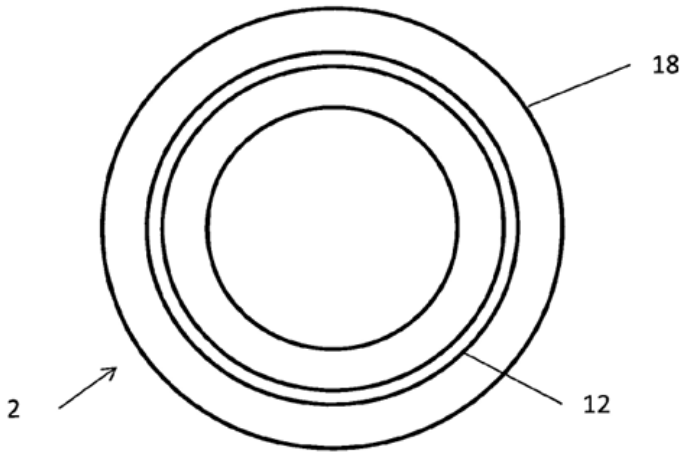

Fig. 4

Schröder at Fig. 4.

Dr. Rosing contends that "none of the rings depicted in Schröder's figures include batteries, and Schröder is silent to the location of the battery." RX-0411C at ¶ 318. But, for the description of the embodiments shown in Figs. 4-10, Schröder does not contemplate mounting any components on the inlay 12 outside of the recess (i.e., cavity) between the ring halves 16 and 18. Schröder at 12:1-60. Specifically, Schröder recites that "[o]n the carrier material [of inlay 12] there is arranged at least one antenna coil 8 and at least one chip module 10." Schröder at 12:30-32. And Schröder discloses a "battery" that "is connected to chip module 10." Schröder at 11:46-49. Dr. Rosing is correct that a POSA would have understood placing the battery in the chip module 10 within the removable cover is one option as illustrated in the Fig. 3 example. Dr. RX-0411C at ¶ 320. But a POSA would have understood that Schröder also discloses that the battery may reside within the recess of the Figs. 4-10 embodiment connected to the chip module 10 that resides within the recess between the ring components 16 and 18. Fig. 3 and Fig. 4 are both embodiments of

Schröder—one with all components within a cavity (Figs. 4-10) and one without all components in a cavity (Fig. 3). Thus, Dr. Rosing's statement that Schröder would not have "motivated the POSA to locate the battery within a cavity in the ring" is incorrect and contradicts Schröder's disclosure. Rosing at ¶ 322.

A POSA would also have understood that the battery's location within the cavity is the "first portion" of the cavity because a battery and PCB are physical components that would be positioned in different portions of the cavity. Dr. Rosing disagrees because "[t]his presumes that Schröder discloses anything at all regarding the relative locations of the energy storage device with respect to inlay 12, or that a POSA would have any motivation to place the battery in the same space as inlay 12." RX-0411C at ¶ 321. But, as described above, a POSA would have understood that the chip module 10 can be placed under the cover in the Fig. 3 construction, or on the inlay 12 within the recess between components 16 and 18 in the Figs. 4-10 embodiment. And Schröder discloses that the battery is connected to the chip module 10. So, a POSA would have understood, in the case of Figs. 4-10, that the battery would also reside within the recess to connect to the chip module 10.

Dr. Rosing also contends that "there would be little purpose to add a battery to the device of Schröder." RX-0411C at ¶ 325. But this ignores the fact that Schröder explicitly discloses that "[i]n a further embodiment example, the external secure unit 2 has an energy storage device, e.g. an accumulator or a ***battery***." Schröder at 11:46-48 (emphasis added). Furthermore, Dr. Rosing paints Schröder as only disclosing simple NFC capabilities—but fails to account for the fact that Schröder also discloses using a "biometric sensor" that has "at least one infrared diode" and "at least one infrared sensor" for finger vein recognition technology. Schröder at 9:62-10:1. This biometric sensor would need external power (i.e., from a battery). Dr. Rosing's additional

[redacted]

comments regarding the disclosures from Schröder appear to disagree with Schröder—not Mr. Alarcon.

Oura admits that Schröder discloses a battery. RFA 929 of RX-0326.

Lastly, Dr. Rosing contends the below:

> 327. Furthermore, nothing in Schröder would have enabled a POSA to make the claimed ring. Mr. Alarcon's report fails to explain how one of ordinary skill would make the leap from Schröder's rudimentary disclosure to the detailed claimed invention, without use of hindsight.
>
> 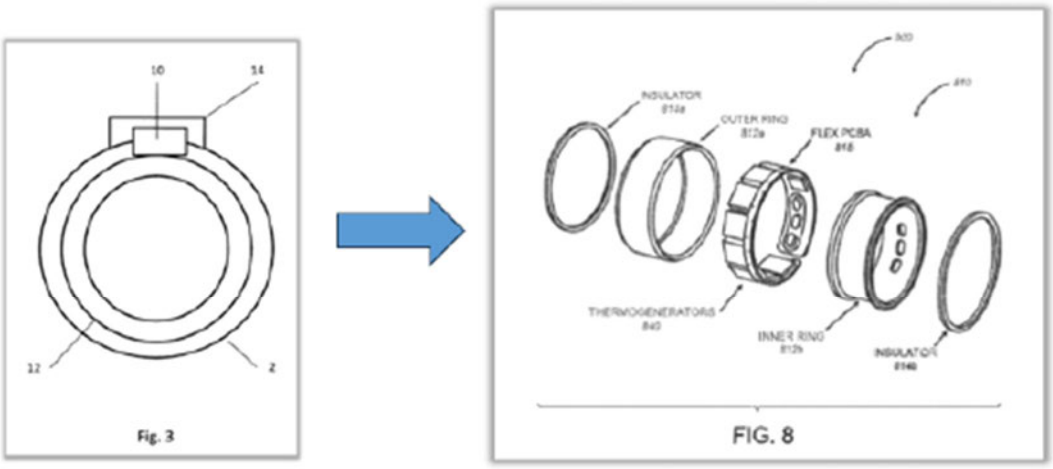
>
>
> *Compare* FIG. 3 of Schröder (left) to FIG. 8 of the '178 patent (right).

Dr. Alarcon, however, will indeed explain how a POSA would not be required to make such a "leap"—which, to the extent neccessary, is a very small (and obvious) leap at that. And a POSA looking through and evaluating Schröder would have understood that Schröder discloses an internal housing component, an external housing component, a recess between those housing components, a flexible "carrier" material (i.e., flex PCBA) positioned within the recess, and a battery and other electronic components also positioned within that recess.

[redacted]

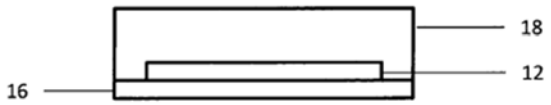

Fig. 8

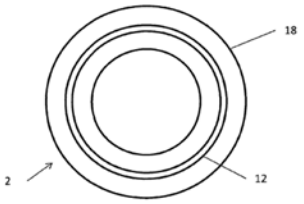

Fig. 4

Schröder at Figs. 4, 8.

5. Claim [1d]: Schröder discloses: "a printed circuit board disposed between the internal housing component and the external housing component, wherein the printed circuit board extends through at least a second portion of the cavity of the finger-worn wearable ring device different from the first portion"

Claim 1 recites: "a printed circuit board disposed between the internal housing component and the external housing component, wherein the printed circuit board extends through at least a second portion of the cavity of the finger-worn wearable ring device different from the first portion." Mr. Alarcon will testify that Schröder discloses this limitation. Mr. Alarcon will also testify that Schröder as modified in view of the knowledge of a POSA for limitation 1[c] (to the extent necessary) discloses this limitation. RX-0003C at ¶¶ 359-365.

Schröder discloses an inlay 12 that is a "carrier" of other components: "FIG. 3 shows a cross section through an external secure unit 2 in the form of a finger-ring 2 with a replaceable chip module 10. In the interior of the finger-ring 2 is arranged an inlay 12. The inlay 12 serves as a carrier for at least one antenna coil 8." Schröder at 8:54-58.

Schröder further discloses that "[i]n the finger-ring 2 as an external secure unit 2 there can be arranged at least one inlay 12. The inlay 12 can have at least one chip module 10 with at least one antenna coil 8, with at least one further electronic device, e.g. a display, optionally being arranged on the inlay 12." Schröder at 12:61-65.

And more specifically, Schröder discloses that the inlay is a flexible carrier material: "[t]he inlay 12 itself consists of a preferably flexible carrier material, e.g. PET, Kapton, etc." Schröder

at 12:28-29. A POSA would have understood that Schröder's inlay corresponds to the claimed PCB disposed between the internal and external housing components.

And since the PCB is disposed between the housings and in the cavity, the PCB extends through a second portion of the cavity different than the first portion (where the battery is located).

A POSA would have understood that the PCB would only extend through a portion of the cavity between 18 and 16 to allow space for other components in another portion of the cavity, i.e., a battery.

Dr. Rosing contends that "Schröder does not direct a POSA to place a battery outside of the same physical space as the chip module." RX-0411C at ¶ 331. But Schröder only discloses that the battery is "connected" to the chip module 10. And a POSA would understand that one could solder the battery contacts to the chip module without overlapping the two components—or having the battery overlap with the PCB.

Dr. Rosing also contends that Mr. Alarcon "points to no disclosure in Schröder that indicates the inlay occupies less than all of the space shown." RX-0411C at ¶ 331. But, as explained above, a POSA would understand that because the inlay of the embodiments in Figs. 4-10 has components mounted onto it, the inlay 12 would not have a uniform thickness throughout. The different components would have differing heights. Alarcon Dep. Tr. at 172:22-173:9. A POSA would also understand that the inlay 12 does not have to wrap completely around the circumference of the ring's cross-section. For example, Schröder discloses that "[a]dvantageously, the components 16, 18 are so connected that the connection between the components 16,18 can be undone again in order e.g. insert a further inlay 12." Schröder at 12:22-25. This provides an understanding to the POSA that the inlay 12 could either not take up the entirety of the circumferential space of the recess, not take up the entirety of the thickness of the recces, or both.

To the extent that Schröder does not explicitly disclose positioning its printed circuit board in a second portion of its cavity different from the first portion, the POSA would have been motivated to modify Schröder to meet this limitation so that the two components would not overlap and more space in the ring would be utilized. As evidenced by Niwa, a POSA would have had knowledge to position the battery and printed circuit board in different portions of the cavity. Thus, doing so was obvious to a POSA.

6. Claim [1e]: Schröder; and Schröder in combination with Wissmar discloses: "one or more sensors electrically coupled with the printed circuit board and the battery and configured to acquire data from the user through the internal housing component."

Claim 1 recites: "one or more sensors electrically coupled with the printed circuit board and the battery and configured to acquire data from the user through the internal housing component." Mr. Alarcon will testify that Schröder discloses this limitation. Mr. Alarcon will also testify that Schröder in combination with Wissmar discloses this limitation. RX-0003C at ¶¶ 366-370.

"In a further embodiment example of the invention, the external secure unit 2 has a biometric sensor. This enables the user of the external secure unit 2 to authenticate himself. For example, the finger-ring 2 as an external secure unit 2 can have integrated therein at least one biometric sensor. The biometric sensor is connected suitably to the chip module 10. The sensor can be arranged on the chip module 10 or it can be arranged in the finger-ring 2 separately from the chip module 10 e.g. on a separate circuit foil. The biometric sensor can be integrated into the finger-ring 2 e.g. such that the biometric sensor captures e.g. at least a partial vein image in the finger while the finger-ring 2 is being pushed over a finger. As biometric sensors there can be employed e.g. at least one infrared diode and at least one infrared sensor. The infrared diode and

the infrared sensor are arranged e.g. opposite each other such that e.g. an finger bone located therebetween has no adverse effect on a measuring result." Schröder at 9:54-10:4.

Oura admits that Schröder discloses a sensor and "one or more sensors." RFA 946 and 947 of RX-0326.

A POSA would have understood that the sensor would be electrically coupled to the PCB and battery because the sensor needs power to operate. Moreover, because the biometric sensor "captures" a finger vein image, the sensor "acquire[s] data from the user through the internal housing component" by acquiring information through the ring half 16 that touches the finger.

Dr. Rosing argues that "Schröder discloses nothing about the placement of the biometric sensor" and "to that end, the sensor could be disposed on the ring surface, or could acquire data through a gap between ring halves." But Schröder discloses that the biometric sensor "can be arranged on the chip module 10 or it can be arranged in the finger ring separately from the chip module 10." Schröder at 9:60-62. In both cases, when in view of the embodiments described by Figs. 4-10, the biometric sensor would be *in* the ring. And if the biometric sensor is *in* Schröder's finger ring, then the only way it can acquire data is *through* Schröder's internal housing component. In the case where ring components 16 and 18 are internal/external components (i.e., Figs. 6-10), then there would be no such gap for the biometric sensor to acquire data through.

To the extent this limitation is not explicitly disclosed by Schröder, it is obvious in view of Wissmar. Wissmar discloses a pressure sensor 8 which senses pressure "through an inlet hole shaped as a horn cone to maximize the pressure compression ratio at the pressure sensor end 11." Wissmar at [0073] and Fig. 3; see Wissmar at [0103]. Wissmar thus teaches sensors acquiring data through an internal housing component. Wissmar's pressure sensor 8 is also electrically coupled to a printable circuit board housed in a ring cavity. Id. Wissmar acknowledges that Wissmar's ring

device could be used to track health benefits and use the pressure sensor to "provide a non-invasive measurement for changes in finger blood flow reflected by pulse wave amplitude (PWA). The end application used could be either be, for example, for medical, health, or dating purposes." Wissmar at [0103]. Thus, because Wissmar contemplates measuring biosignals using a ring device, a POSA would have looked to Wissmar for a solution to implement sensors within an inner circumferential surface to maximize wearability of Schröder's ring for the end user and protect its biometric sensors.

Dr. Rosing contends that a POSA would not have looked to Wissmar because "Wissmar does not use [its] pressure sensor for biometric identification as disclosed in Schröder. It is thus not clear why a POSA would look to the sensor of Wissmar to modify Schröder." RX-0411C at ¶ 337. But Dr. Rosing misinterprets Mr. Alarcon's opinions. Mr. Alarcon will testify that a POSA would look to use Wissmar's window—not Wissmar's pressure sensor itself. And Wissmar contemplates using that window for biometric monitoring, and that window is in the inner surface of wearable ring device that houses electrical components in a cavity. For those reasons, a POSA would look to Wissmar's sensor window that acquires data through its internal housing component.

Dr. Rosing also opines that Wissmar does not discloses a sensor acquiring data through an internal housing component. RX-0411C at ¶ 338. That is addressed in the Wissmar section of this brief.

7. Claim [2]: Schröder; and Schröder in combination with Niwa discloses: "The finger-worn wearable ring device of claim 1, wherein the first portion of the cavity of the finger-worn wearable ring device is non-overlapping with the second portion of the cavity of the finger-worn wearable ring device."

Claim 2 recites: "The finger-worn wearable ring device of claim 1, wherein the first portion of the cavity of the finger-worn wearable ring device is non-overlapping with the second portion

of the cavity of the finger-worn wearable ring device." Mr. Alarcon will testify that Schröder discloses this limitation. Mr. Alarcon will also testify Schröder in combination with Niwa discloses this limitation. Mr. Alarcon will also testify that Schröder in view of the POSA's knowledge discloses this limitation. RX-0003C at ¶¶ 371-375. Mr. Alarcon will also testify that Schröder as modified with Wissmar's inlet hole to sense through the internal housing component would have the same motivation to combine with Niwa and the same expectations of success (described below) and discloses this limitation for the same reasons below.

Schröder discloses "In a further embodiment example, the external secure unit 2 has an energy storage device, e.g. an accumulator or a battery. The energy storage device is connected to the chip module 10 in order to supply the chip module 10 with energy outside an electromagnetic field of a reader." Schröder at 11:46-67.

A POSA would have understood that there were a finite number of ways to put a battery and PCB inside of a ring, and each would have been obvious to try. A POSA would have been motivated to try a design with non-overlapping positions because if the PCB and battery do not overlap then the ring design would be thinner, more compact, save on material costs, reduce volume of the cavity, and make the ring more comfortable. '178 patent at claims 2 and 3.

Moreover, a POSA would have been motivated to have the first portion and the second portion not overlap because it was well known, as taught by Niwa. RX-0015 at [193, 217]. Figs. 27 and 28 of Niwa show a battery 24 in a first portion of the cavity in second unit 20 and substrate 11 extending through a second portion of the cavity in first unit 10. RX-0015 at [193, 217, 200, 207]. And Niwa's substrate is a PCB as described above. Thus, Niwa's Figs. 27 and 28 illustrate a first portion of a cavity with the battery that does not overlap the second cavity portion with the PCB.

[redacted]

FIG.27

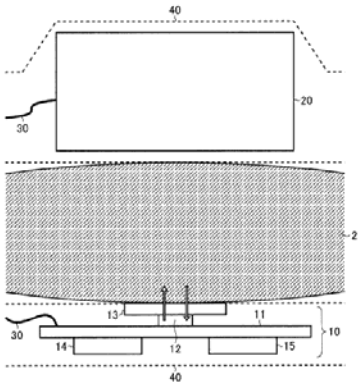

FIG.28

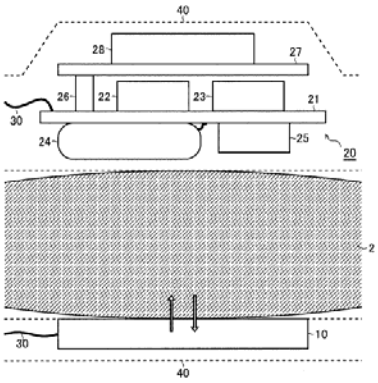

RX-0015 at Figs. 27-28.

In addition to the reasons explained above for motivation to combine Schröder and Niwa, a POSA would have been motivated to prevent overlap, like in Niwa, when implementing Schröder's "finger-ring" because doing so allows for a thinner, more compact ring that saves on material costs and reduces the volume of the cavity, making the ring more comfortable. RX-0015 at [0206].

8. Claim [12]: Schröder in view of the POSA's knowledge; and Schröder in combination with Other References discloses: "The finger-worn wearable ring device of claim 1, wherein the battery comprises a curved battery, wherein an arc of the curved battery approximates a corresponding arc of the external housing component."

Claim 12 states "The finger-worn wearable ring device of claim 1, wherein the battery comprises a curved battery, wherein an arc of the curved battery approximates a corresponding arc of the external housing component." Mr. Alarcon will testify that Schröder as modified with the POSA's knowledge discloses this limitation. Mr. Alarcon will also testify that Schröder in combination with Webster discloses this limitation. Mr. Alarcon will also testify that Schröder in combination with Henderson discloses this limitation. RX-0003C at ¶¶ 376. It would be routine to put commercially available curved batteries inside of Schröder to increase longevity of the device

and improve the wearer's experience. Mr. Alarcon will also testify that Schröder as modified with Wissmar would have the same motivations to combine and the same expectations of success as described below for each battery reference.

To the extent that Schröder does not explicitly disclose a curved battery within its inlay 12, the POSA would have been motivated to move the battery into the cavity described above between the housing components to save space and provide a more natural ring structure for the user to wear. Indeed, a POSA would have been motivated to use one of the curved batteries as disclosed below that would have fit inside a curved enclosure.

A POSA would have been motivated to use a curved battery by simply examining the curved housing and selecting a battery to mirror the size and shape of the curved housing. Eric Strasser described the obvious nature of developing the battery for the ring:

> Q. And the idea of a curved battery is from the idea that you have a curved housing; is that right?
> A. Correct, we wanted to create a product that looked like a ring.
> Q. And so for a battery to be used in a curved housing, the battery would also need to be curved?
> A. Correct.

E. Strasser Tr. at 191:6-14; *See also id.* at 190:16-23.

Mr. Strasser also testified that others already "knew how to [make the curved battery]" and "they already had the process in place." And that the battery manufacturer "had product that we identified as the solution to what we were looking for," "had the experience of building it," and "they had batteries small enough to fit in a wearable device which could be constructed as a ring" when the inventors approached this company. E. Strasser Tr. at 194:9-14, 205:9-16.

As to the availability of the curved battery, Mr. Strasser answered "Yeah" when asked "did the [company] have the technology to develop curved batteries prior to November 2013?." E. Strasser Tr. at 195-196. Mr. Strasser also stated "they were selling batteries…to a few other

[redacted]

companies" and that a band the artist Will.i.am was selling "got a lot of press" and "was a curved battery." And he said "that's how we found them." *Id.* The inventors simply approached curved battery manufacturer they found through looking at wrist wearables to find the curved battery product ultimately used in the device claimed in the '178 Patent. *Id.*

For example, Webster discloses a ring 100 including a flexible circuit board 102. The flexible circuit board 102 supports a radio frequency device 200 which includes, among other things, a battery 212. RX-0011 at 1:40-61, 5:8-12. "A battery 212 together with voltage regulation circuitry can supply the proper voltage to each of the circuit elements. The battery 212 can, in one embodiment, be a thin film lithium ion or zinc-manganese dioxide chemistry battery that can be bent or curved. RX-0011 at 5:8-12. It would have been obvious to use Webster's battery in Schröder because it naturally would have fit inside of Schröder's housing and doing so would increase the battery capacity and life of the device.

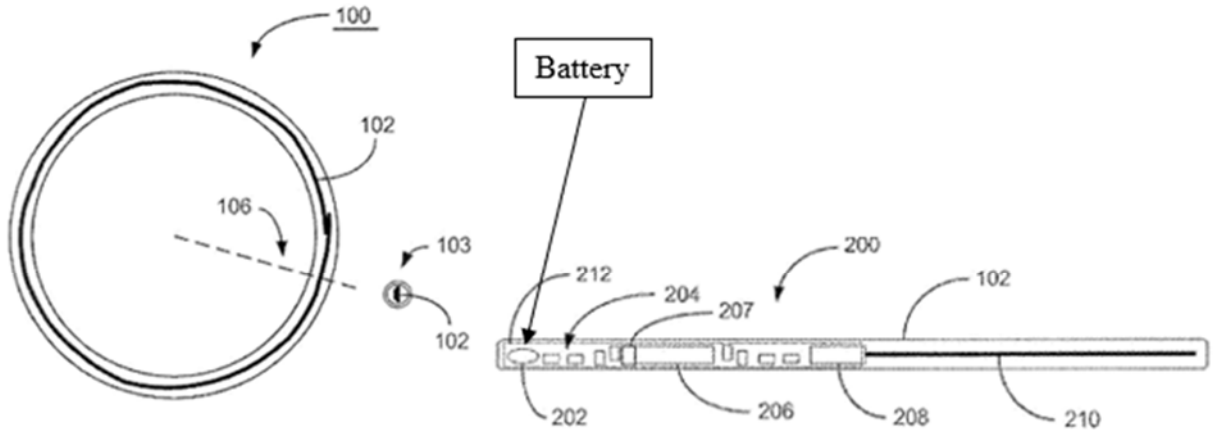

FIG. 1 FIG. 2A

RX-0011 at FIGS. 1 and 2A (annotations added).

Henderson is directed to batteries and power management in a ring-shaped activity monitoring device with curved batteries that measure various biometric information. Henderson

[redacted]

states that its "batteries 142 have a curvilinear or curved configuration" that "are generally flush with the inner surface 32 of the spine member 22," which is curved. RX-0012 at ¶ [0077]. Henderson also discloses "the device may include one or more functional batteries of a curved profile," and discloses how to make curved batteries. RX-0012 at ¶ [0125]. "Accordingly, the device may include one or more functional batteries of a curved profile." *Id*. A POSA would have understood from Henderson's disclosure that a ring, similar to an oval/bracelet, would "require[] a volume of space allocated to the batteries to also take this curved or radial profile." *Id*. It would have been obvious to use Henderson's battery in Schröder because Henderson teaches that its battery can be different sizes and would have naturally contoured to fit inside of Schröder's housing and doing so would increase the battery capacity and life of the device. RX-0012 at ¶ [0078].

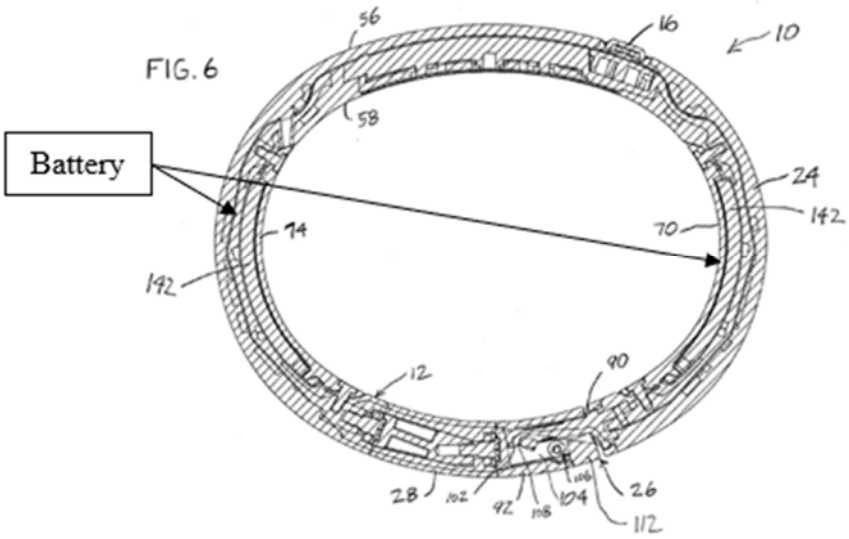

RX-0012 at FIG. 6 (annotations added). A POSA would have understood that the Nike+ FuelBand is the real life embodiment of Henderson, which was filed by Nike. The Nike+ FuelBand was a product that had curved batteries and was released prior to 2013, as evidenced by this 2012 YouTube teardown. RX-0032.

[redacted]

RX-0032at 3:18, 3:56.

The '178 Patent explains that the battery "can be any type of battery, such as a rechargeable battery. The battery can be a thin, flexible lithium ceramic chemistry battery. In another example, the battery can be a circular formed lithium polymer or lithium ion battery. The battery can provide power to any of the components described above. In one example, the battery can be a lithium cell integrated directly with the flexible PCB described above. Other implementations can integrated the battery directly onto the housing to reduce the volume of space taken up by battery packaging." '178 Patent at 15:12-21. These types of curved batteries disclosed in the '178 were within the POSA's knowledge as evidenced by: GMBPower batteries that were curved and commercially available. RX-0030.

GMBPower had a Lithium Polymer Battery for sale in on October 21, 2013, that "can be made at clients requirement." RX-0030. The battery was "[b]endable, rechargeable, thin, light, and with long shelf life." The smallest listed lithium curved battery for sale was 2.0 mm thick, 10 mm wide, and 21 mm long. The specification states that "By way of non-limiting example, the WCD interior diameter d1 (the diameter generally defining the ring size) can be in an approximate range of 12 mm to 24 mm so as to accommodate finger sizes ranging from a small child to a larger adult, and on any acceptable finger, including the thumb. The exterior diameter d2 can also be any reasonable size or shape, and can define an approximate range of between 18 mm and 30 mm.

Likewise, the thickness between diameters dl and d2 can vary widely, but can typically reside in an approximate range of 1.5 mm to 3 mm. The width WR of the WCD along the direction of finger extension (finger longitudinal direction) is widely variable, and can be selected, in part to accommodate internal and external components. In a non-limiting example, the width WR is in a range of approximately 3 mm to 8 mm." '178 Patent at col. 17:4-18. Thus, GMBPow batteries were of the correct size to fit inside of finger-worn rings, including that of Asada, which is of approximate size to the rings described by the '178 patent because both are rings that need to fit on the finger. It would be obvious and easy to swap out Schröder's battery to connect the GMBPow battery. The POSA would be motivated to use the GMBPow curved battery in Schröder to increase the battery life of Schröder's ring, improving convenience to the user.

Dr. Rosing contends that a POSA would not have had an expectation of success adding the above curved batteries to Schröder because they are allegedly too large for finger-worn rings and unnecessary for the applications and use of Schröder. Rosing at ¶¶ 324, 326. But a POSA would have understood that the above disclosures (specifically Henderson, Webster, and the Nike Fuel Band) merely provide examples of curved or flexible batteries to show that those battery types existed prior to November 2013. And a POSA would have understood that because those batteries existed, the technology existed, and sizes appropriate for a ring existed in the marketplace. Alarcon Dep. Tr. at 100:2-101:3. Indeed, Mr. Alarcon provides an example that would fit in a finger ring (according to the '178 Patent)—the GMBPow described above. RX-0003C at ¶¶ 100-102. Schröder provides no information regarding the desired thickness. And according to the '178 Patent, the GMBPow battery is thin enough to fit in a finger-worn wearable device. However, even if a thinner battery is required, Mr. Alarcon also provides a flexible Thinergy battery (170 µm thick)—which also according to the '178 Patent—is an appropriate curved battery. '178 Patent at

15:12-21; RX-0411C at ¶ 324 (suggesting that a 200 μm thick battery would be appropriate for Schröder).

Dr. Rosing argues that "Mr. Alarcon points to no finger-worn ring device in the prior art that includes a curved battery or any disclosure that shows a POSA would reasonably expect to be successful in incorporating a curved battery into a finger-worn wearable ring device." However, Mr. Alarcon indicated at his deposition that he recalled coming across Slaby, which is a finger-worn ring device with a curved, "flexible strip," battery—and has similar capabilities and functionalities as Schröder. Alarcon Dep. Tr. at 179:11-180:10; 245:5-247:16; Slaby at [0020].

9. Claim [13]: Schröder in combination with Niwa renders obvious: "The finger-worn wearable ring device of claim 1, wherein the one or more sensors comprise a first light-emitting component configured to emit light associated with a first wavelength, and a second light-emitting component configured to emit light associated with a second wavelength different from the first wavelength."

Claim 13 recites: "The finger-worn wearable ring device of claim 1, wherein the one or more sensors comprise a first light-emitting component configured to emit light associated with a first wavelength, and a second light-emitting component configured to emit light associated with a second wavelength different from the first wavelength." Mr. Alarcon will testify that Schröder in combination with Niwa discloses this limitation. RX-0003C at ¶¶ 377-381. Mr. Alarcon will also testify that Schröder as modified with Wissmar discloses this limitation, and Schröder as modified with Wissmar would have the same expectations of success and motivations to combine as described below.

Specifically, Schröder discloses a first emitting component configured to emit light associated with a first wavelength. For example, "[i]n a further embodiment example of the invention, the external secure unit 2 has a biometric sensor. This enables the user of the external secure unit 2 to authenticate himself. For example, the finger-ring 2 as an external secure unit 2

[redacted]

can have integrated therein at least one biometric sensor. The biometric sensor is connected suitably to the chip module 10. The sensor can be arranged on the chip module 10 or it can be arranged in the finger-ring 2 separately from the chip module 10 e.g. on a separate circuit foil. The biometric sensor can be integrated into the finger-ring 2 e.g. such that the biometric sensor captures e.g. at least a partial vein image in the finger while the finger-ring 2 is being pushed over a finger. As biometric sensors there can be employed e.g. at least one infrared diode and at least one infrared sensor. The infrared diode and the infrared sensor are arranged e.g. opposite each other such that e.g. an finger bone located therebetween has no adverse effect on a measuring result." Schröder at 9:54-10:4.

Schröder in view of Niwa also discloses wherein the one or more sensors comprise a second light-emitting component configured to emit light associated with a second wavelength different from the first wavelength.

Niwa discloses one or more sensors that comprise a first light-emitting component figured to emit light associated with a first wavelength, and a second light-emitting component configured to emit light associated with a second wavelength different from the first wavelength. RX-0015 at [12, 27, 209-210]. First unit 10's light-emitting portion can include "LED1 to LED8" with "output wave lengths λ1 to λ8…different from one another." RX-0015 at [147]. Schröder discloses a light-emitting component associated with infrared light. It was would have been add Niwa's light-emitting component associated with visible light to Schröder so Schröder's sensor would have two light-emitting components that emit light at different wavelengths—one infrared and one visible—to improve Schröder's sensor accuracy and provide additional capability to Schröder's ring.

A POSA would have been motivated to combine these references since they are analogous art and teach improvements on similar types of devices—wearable biometric sensing devices

[redacted]

having similar structural components. And a POSA would have had a reasonable expectation of success because wearable devices, specifically rings, are restricted by form factors. Therefore, a POSA would have understood that these references disclose interrelated teachings on technology that would have been amenable to predictable and understood combinations. These motivations to combine and reasonable expectation statements apply any place in this document where Niwa is combined with Schröder.

10. Claim [14]: Schröder in combination with Niwa renders obvious: "The finger-worn wearable ring device of claim 13, wherein the first wavelength is associated with visible light, and wherein the second wavelength is associated with infrared light."

Claim 14 recites: "[t]he finger-worn wearable ring device of claim 13, wherein the first wavelength is associated with visible light, and wherein the second wavelength is associated with infrared light." Mr. Alarcon will testify that Schröder as modified with Niwa discloses this limitation as explained in the claim 13 analysis for Schröder above. Mr. Alarcon will also testify that Schröder as modified with Wissmar and Niwa discloses this limitation also explained in the claim 13 analysis for Schröder above. RX-0003C at ¶ 382.

11. Claim [17]: Schröder discloses: "The finger-worn wearable ring device of claim 1, wherein the external housing component and the internal housing component define the cavity configured to at least partially surround the battery, and the printed circuit board, wherein one of the external housing component or the internal housing component comprises: a first side wall and a second side wall that extend between the internal housing component and the external housing component, wherein the cavity is defined at least in part by the outer circumferential surface, the inner circumferential surface, the first side wall, and the second side wall."

Claim 17 recites: "The finger-worn wearable ring device of claim 1, wherein the external housing component and the internal housing component define the cavity configured to at least partially surround the battery, and the printed circuit board, wherein one of the external housing component or the internal housing component comprises: a first side wall and a second side wall

that extend between the internal housing component and the external housing component, wherein the cavity is defined at least in part by the outer circumferential surface, the inner circumferential surface, the first side wall, and the second side wall." Mr. Alarcon will testify that Schröder discloses this limitation. RX-0003C at ¶¶ 383-384. Mr. Alarcon will also testify that Schröder as modified with Wissmar for limitation 1[e] also discloses this limitation for the same reasons described below.

Schröder's "finger-ring" alone, which includes a cavity around the internal components, or as modified with a POSA's knowledge to expand the space of the recess, has a cavity between the internal and external housing components that houses and at least partially surrounds Schröder's inlay 12 (PCB) and battery. Schröder's "finger-ring" has internal and external housing components that have a first and second side wall that extend between the internal and external housing components to further define the cavity. Ring halves 16 and 18 are manufactured by casting, milling, or embossing and are "interconnected by a suitable technology, e.g., by plugging, gluing, screwing, crimping, etc." Schröder at 12:10-22. The ring halves may be U-shaped with inlay 12 being arranged between. Schröder at 12:45-55. As shown in Figure 7 below, the U-shaped housing components are connected and thus form "side walls" that extend from external housing component 18 to internal housing component 16. Similarly, in Figure 8, external housing portion 18 is a U-shape component and connects to internal housing component 16 therefore forming "side walls." The side walls, inner circumferential surface, and outer circumferential surface all define the recess (i.e., cavity) for inlay 12.

[redacted]

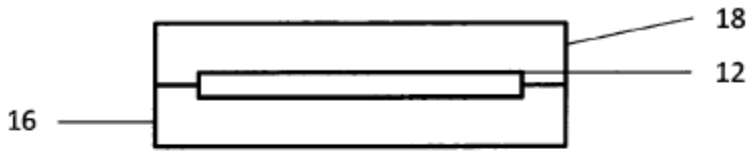

Fig. 7

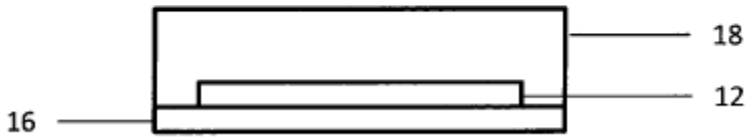

Fig. 8

Schröder at Figs. 7-8.

12. Claim [18]: Schröder discloses: "The finger-worn wearable ring device of claim 17, wherein the first side wall, the second side wall, or both, are substantially perpendicular to the inner circumferential surface, the outer circumferential surface, or both."

Claim 18 recites: "[t]he finger-worn wearable ring device of claim 17, wherein the first side wall, the second side wall, or both, are substantially perpendicular to the inner circumferential surface, the outer circumferential surface, or both." Mr. Alarcon will testify that Schröder discloses this limitation. RX-0003C at ¶¶ 385-386. Mr. Alarcon will also testify that Schröder as modified with Wissmar for limitation 1[e] also discloses this limitation for the same reasons described below.

Schröder's first and second side walls are substantially perpendicular to the inner and outer circumferential surfaces. As stated above for Claim 17, the side walls are the part of the U-shaped components that extend from external housing component 18 to internal housing component 16 and surround the cavity. As shown in Figures 7 and 8 below, the side walls are substantially perpendicular to the inner and outer circumferential surfaces, i.e., outside surfaces of the internal and external housing components.

[redacted]

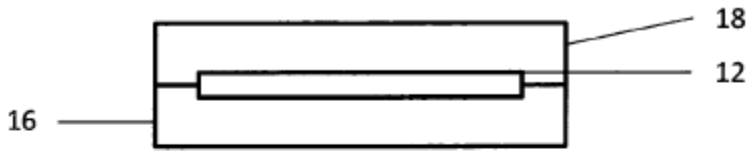

Fig. 7

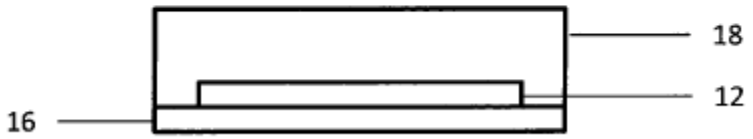

Fig. 8

Schröder at Figs. 7-8.

I. Wissmar Anticipates; Wissmar Renders Obvious in view of Other References; and Wissmar Renders Obvious in view of the POSA's knowledge the Asserted Claims

While cited on the face of the '178 patent, Wissmar was not considered substantively by the examiner during prosecution. Notably, the Motiv founders were "really concerned that there was someone else out there that had created what we were building and created prior art that would invalidate our ability to get a patent for what we were trying to build," and Wissmar "was one that had some teeth," and was "one of several [references] that were concerning" to the Motiv founders when they applied for the original '034 patent. RX-0321C.45 at 176:8-21; RX-0289C (discussing and citing 2012/0218184 to Wissmar). Before the first provisional was filed, the Motiv founders stated: "[t]here [are] certainly others working on this form factor, and we may face issues with patents at some point." RX-0289C. The Motiv founders also were looking at other wearable devices when beginning to design their ring. RX-0289C. The Motiv founders were also "very surprised that that patent was issued. We did not expect our first omnibus patent to have the claims that it did. And we expected there to be more rounds of back and forth with the patent office in determining whether we could have real, viable claims." RX-0321C.16 at 59:7-60:5. The

founders examined Wissmar and his company SenseM that was making a smart ring in June 2017 and stated "[t]he claims are pretty darn close." RX-0292C; RX-0321C.47-48 at 181:5-185:15. Indeed, Motiv was "going into a market that was riddled with IP and claims and prior art." RX-0321C.47-48 at 184:22-185:4.

Wissmar anticipates; Wissmar renders obvious in view of Schröder; and Wissmar renders obvious in view of the POSA's knowledge asserted claim 1.

1. Claim [1-pre]: Wissmar discloses "[a] finger-worn wearable ring device, comprising:"

The preamble of claim 1 recites: "[a] finger-worn wearable ring device, comprising." The parties have agreed that the preamble is limiting. Mr. Alarcon will testify that Wissmar provides such a disclosure. RX-0003C.198-99 ¶¶ 389-391.

Wissmar discloses a finger-worn wearable ring device. Specifically, Wissmar, titled "Electronic Finger Ring and the Fabrication Thereof," discloses an "electronic finger ring compris[ing] electronic components." RX-0016.1 at Abstract; *see also* RX-0016.21-24 at ¶ [0001], [0073]. According to Wissmar, one such electronic component includes a pressure sensor 8 located "so that the cavity housing the sensor 8 faces the inner circumference of the toroidal shaped finger ring structure 1." RX-0016.24 at [0083]. Notably, "the inner circumference of the ring" is "the surface facing the finger of the user." RX-0016.26at [0101]. Per Wissmar, "[t]his location [of the sensor 8] makes the pressure on the pressure sensor increase when the finger carrying the ring is bended since the tissue of the lower part of the finger then becomes compressed and expanded in its radial direction." RX-0016.24at [0083]; *see also* RX-0016.2 at Fig. 1:

[redacted]

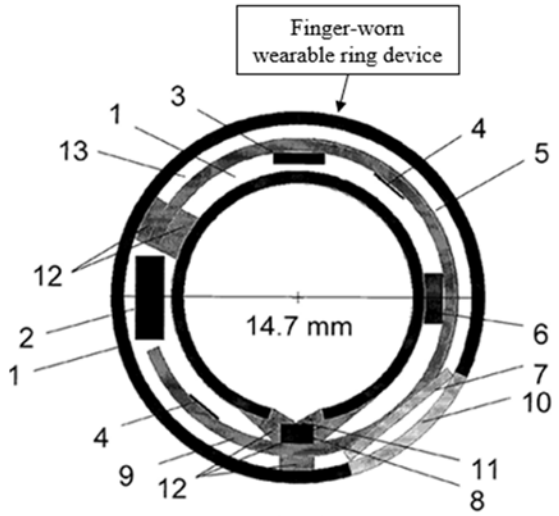

Fig. 1

RX-0016.2at Fig. 1 (annotated); *see also* RX-0016.27-28 at [0142], [0148], [0154] (disclosing ring embodiments comprising "a toroidal shaped finger ring structure having a metal shell ***intended to contact a finger of a user wearing the ring***") (emphasis added).

Because Wissmar's ring is "a toroidal shaped finger ring structure" that is "intended to contact a finger of a user" in order to, in at least some embodiments, "function as a finger plethysmograph" via its pressure sensor, (*see, e.g.*, RX-0016.28 at [0154]), Wissmar's ring is finger-worn, wearable, and is a ring device. Indeed, the above figures and paragraphs disclose that Wissmar's ring is worn on the finger, can be worn, and comprises a sensor that functions as a plethysmograph, as well as a battery. *See, e.g.,* RX-0016.21-28 at [0019], [0040], [0073], [0083], [0103], [0154]. Complainants also admit that Wissmar discloses a finger-worn wearable device.RX-0326.189-90 at RFA No. 335.

2. Claim [1a]: Wissmar; Wissmar in view of the POSA's knowledge; and Wissmar in combination with Schröder discloses "an external housing component defining an outer circumferential surface of the finger-worn wearable ring device;"

Claim 1 recites "an external housing component defining an outer circumferential surface of the finger-worn wearable ring device." Mr. Alarcon will testify that Wissmar provides such a

[redacted]

disclosure. Mr. Alarcon will also testify that Wissmar in combination with the POSA's knowledge discloses this limitation. Mr. Alarcon will also testify that Wissmar in combination with Schröder discloses this limitation.

Wissmar discloses that "FIG. 1 is a schematic profile view of the electronic finger ring where the electronic components are mounted on a flexible printed circuit board packaged inside the torus shaped finger ring with a pressure sensor facing the inner boundary of the torus in accordance with an embodiment of the present invention." RX-0016.22-23at [0051]. Wissmar further discloses that "FIG. 4 is a schematic profile view of the electronic components mounted on a flexible printed circuit board packaged inside a torus shaped finger ring with an alternative design having the pressure sensor being placed on the outer boundary of the torus." RX-0016.23at [0054]. Wissmar explains that it has "an inner boundary of the toroidal shaped finger ring structure 1" and "the outer boundary of the toroidal shaped finger ring structure 1." RX-0016.23-24at [0073].

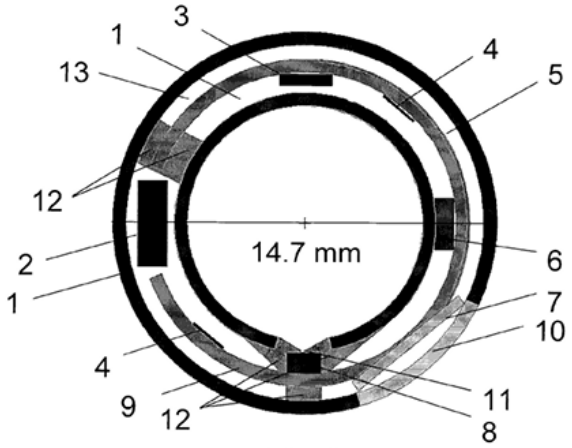

Fig. 1

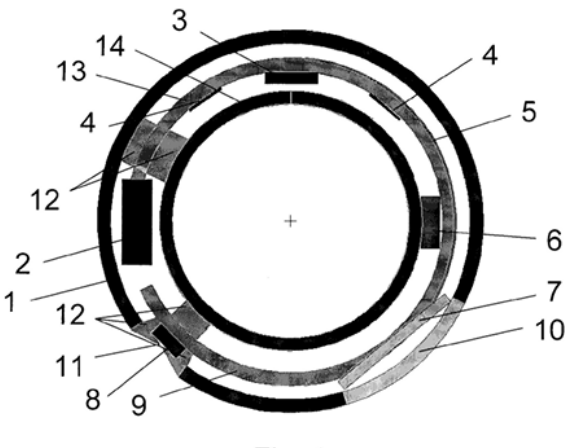

Fig. 4

RX-0016.2-5at Figs. 1, 4.

Indeed, Wissmar teaches that, in at least one embodiment, its disclosed "toroidal shaped finger ring structure 1" is "constituted of two different metallic shells: (i). 1 *a,* made of gold (Au) or silver (Ag), enclosing the major parts of the finger ring structure geometrically

[redacted]

described as radially furthest away from the toroids centre, and (ii). 1 *b,* made of a titanium compound (Ti, TiW), being the metal enclosing facing the inner parts of the finger ring structure." RX-0016.23-24at [0073]; *see also* RX-0016.28-29 at the claims.

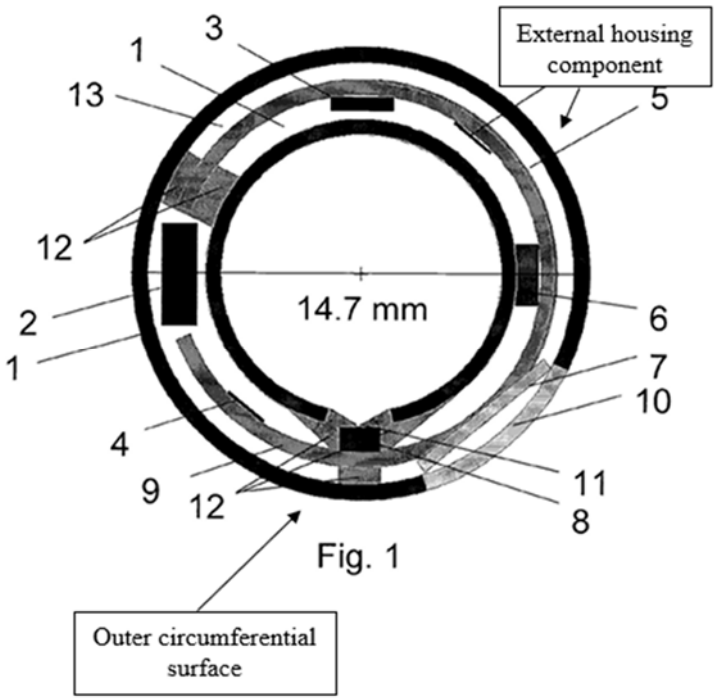

RX-0016.2 at Fig. 1 (annotated).

Wissmar further describes its ring as having both "an inner boundary of the toroidal shaped finger ring structure 1" and "an outer boundary of the toroidal shaped finger ring structure 1." RX-0016.23-24 at [0073]. Wissmar describes that there is an "outer metal shell opening **10** serving as an RF window letting through unperturbed RF radiation." *Id.* Wissmar shows that its housing is manufactured in pieces and then welded together. For example, Wissmar discloses that "the outer shell of the toroidal shaped finger ring structure is constituted of two toroidal complementing halves which are welded together along an interface between the two halves." RX-0016.28at claim 13. Wissmar also shows that the seam for the halves runs along the top of the toroid. RX-0016.12-

[redacted]

15 atFigs. 11-14. The internal housing component and external housing component of Wissmar are connected. *See also* RX-0016.5-16 at Figs. 4, 15 and corresponding text.

Wissmar shows that the it has an inner and outer housing component connected together along a seam. RX-0016.12-14 at Figs. 11-13. Wissmar states: "In an embodiment of the present invention, constituting the top metal layer on the interfaces of the toroidal halves is a material which has two functions, (i). to enhance the welding between the joints by its chemical, adhesive properties and (ii). enhancing the hermetic encapsulation (i.e. lowering the pressure in the sealed ring cavity) by its getter properties." RX-0016.22 at [0027].

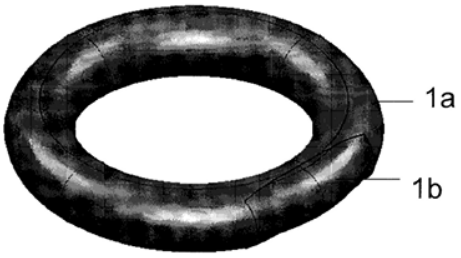

Fig. 11

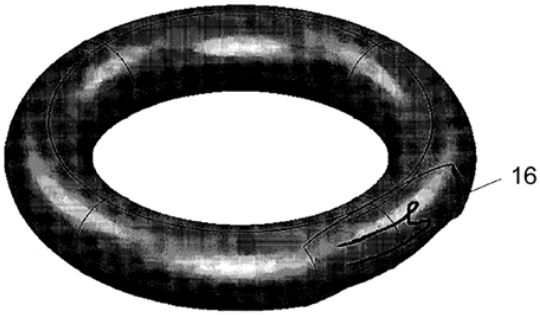

Fig. 13

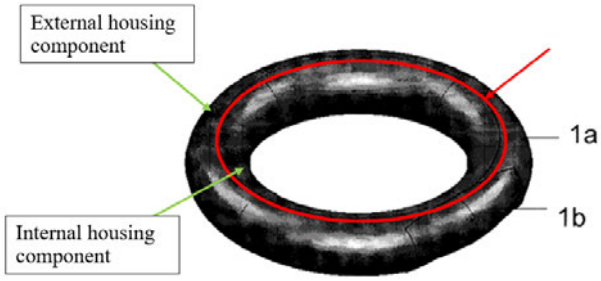

Fig. 11

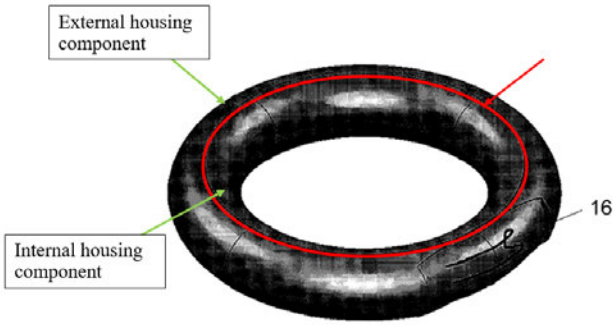

Fig. 13

RX-0016.12-14 at Figs. 11, 13, and 11 (annotated), 13 (annotated). Wissmar shows that it includes multiple pieces that are all connected together to form the overall housing. The internal and external housing components are components that thus enclose space, as construed by the ALJ.

[redacted]

See, e.g., RX-0016.22at [0026] ("That is, the complete electronic circuit is integrated in the interior of the electronic finger ring. In one embodiment in which the ring is a toroidal shaped metal ring it functions.")

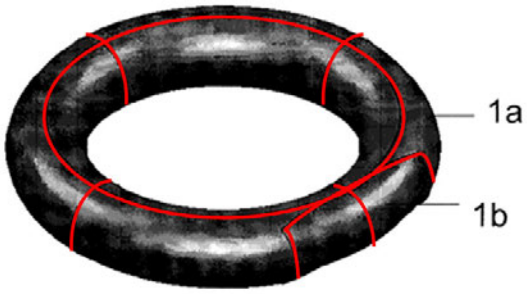

Fig. 11

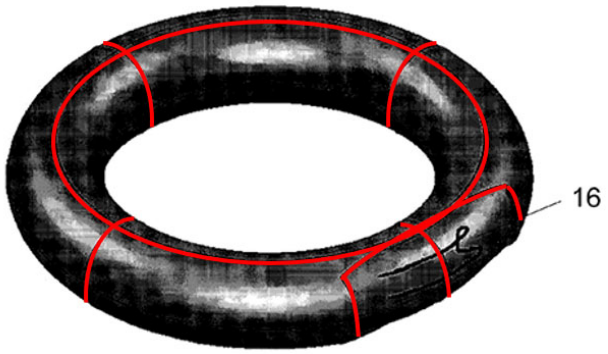

Fig. 13

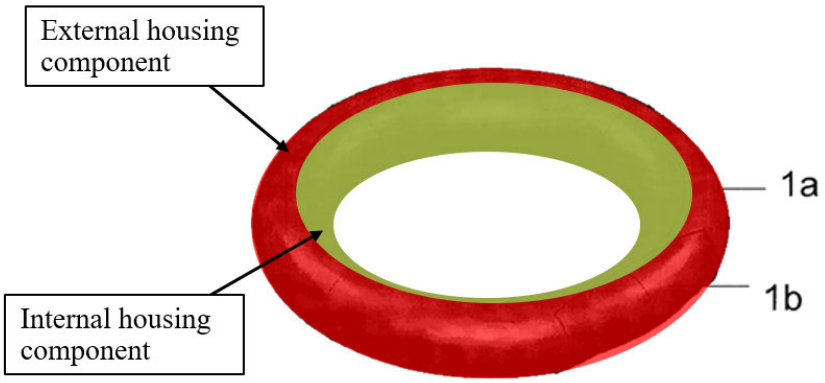

Fig. 11

(RX-0016.12-14 at Figs. 11 (annotated), 13 (annotated).)

In addition, claim 13 of Wissmar discloses "[t]he electronic finger ring according to claim 1, wherein the outer shell of the toroidal shaped finger ring structure is constituted of two toroidal complementing halves which are welded together along an interface between the two halves." RX-0016.28 at Claim 13. Thus, Wissmar discloses both toroidal halves of both inner and outer (as

shown in Figs. 11 and 13) and top and bottom (as shown in Fig. 9). RX-0016.10-14 at Figs. 9, 11, 13. Wissmar's outer surface is circumferential because it is toroidal, has a circumference, and is thus curved. Indeed, Wissmar discloses express embodiments of its "toroidal shaped finger ring structure 1" having an "outer circumference." *See, e.g.*, RX-0016.24 at [0083]. Wissmar also discloses multiple different embodiments, and further indicates, "as is readily appreciated by a person skilled in the art, other embodiments than the ones disclosed [in Wissmar] are equally possible within the scope of the invention." *See, e.g.,* RX-0016.25 at [0096].

Thus, Mr. Alarcon will testify that Wissmar discloses an external housing component defining an outer circumferential surface of the finger-worn wearable ring device.

Moreover, and to the extent necessary, it would have been obvious to a POSA to modify the way a toroidal shaped ring is divided into separate structures that enclose space. This would be nothing more than ordinary mechanical skill. For example, it was well within the skill in the art for a POSA to have welded separate internal and external housing components along the seam disclosed in Wissmar, as illustrated below. A POSA would have been motivated to do so at least because Wissmar expressly teaches that, "as is readily appreciated by a person skilled in the art, other embodiments . . . are equally possible within the scope of the invention." *See, e.g.,* RX-0016.25 at [0096]. A POSA would have had a reasonable expectation in making any such modification, to the extent necessary, because the cross section of FIG. 1 would remain the same with the external housing component defining the outer circumferential surface and the internal housing component defining the inner circumferential surface.

[redacted]

Fig. 11

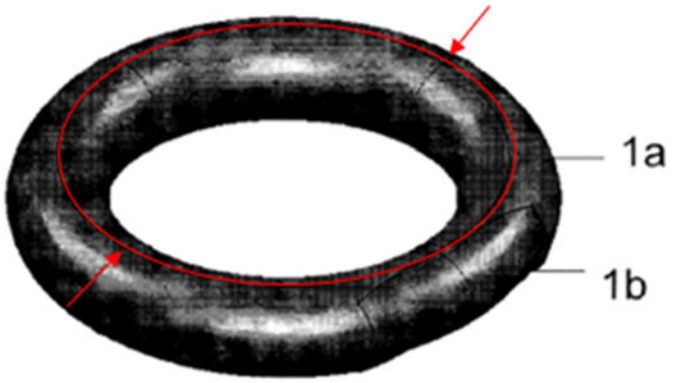

RX-0016.12 at Fig. 11 (annotated).

A POSA would have also been motivated to provide an external housing component defining the outer circumferential surface and the internal housing component defining the inner circumferential surface. Wissmar discloses that "the components may be mounted on only one side of the FCPB along the circumference of the toroidal shaped fingering structure in order to obtain a lower cost fabrication solution." RX-0016.26 at [0098]. Thus, if the components and FCPB (flexible printed circuit board) were to be placed along only either the inner or outer circumference of the ring, a POSA would be motivated to separate the components along a circumferential seam, as illustrated above in red, to easily line either circumference with the components, and then weld or connect the inner and outer housing components together. Thus, Wissmar discloses an external housing component defining an outer circumferential surface of the ring 1.

Furthermore, having separate internal and external structures that form a cavity was already known in the art as evidenced by Schröder. It would be a routine, obvious, and simple modification of one known element for another to yield predictable results. In that respect, and as Mr. Alarcon will testify, using inner and outer housing components makes it easier to manufacture because

[redacted]

welding along the top and bottom of the ring is easier than welding along the inner and outer of the ring. Additionally, the user's skin contacts the inside of the ring and a weld on the inside of the ring would cause discomfort for the user as opposed to having a machined surface.

Other references further evidence that this was nothing more than mechanical skill and would have been obvious to a POSA. For example, Schröder discloses a finger-ring 2. The two ring halves 16 and 18 respectively have a recess into which the inlay 12 is inserted." RX-0018.13 at 12:7-9. "The inlay 12 can have at least one chip module 10 with at least one antenna coil 8, with at least one further electronic device, e.g. a display, optionally being arranged on the inlay 12." *Id.* at 12:62-65. As understood, the ring half 16 is an external housing component and the ring half 18 is an internal housing component. The first and second walls are substantially perpendicular to one of the external housing component, the internal housing component, or both to enclose the inlay 12 and the other components of the finger-ring.

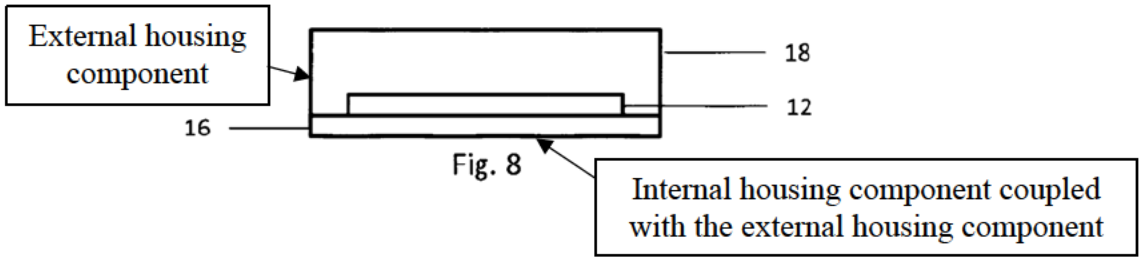

RX-0018.7at Fig. 8 (annotated); RX-0025.28 at Fig. 8; *see also* RX-0025.27-28 at Figs. 5-10; RX-0018.6-7at Figs. 5-10.

A POSA would have been motivated to apply the teachings of Schröder's circumferential outer housing to Wissmar and would have had a reasonable expectation of success in doing so because each relates to the same well-known technologies and to wearable biometric sensing devices having similar structural components including inner and outer housing components, a cavity, and electronic components within the cavity. Moreover, making an external housing

component circumferential would be an obvious mechanical change for the POSA to make, and it may provide a more natural ring design for the user and/or a smaller form factor. Indeed, as Mr. Alarcon will testify, it would make replacing defective parts easier, increase lifetime of Wissmar's internal components, increase manufacturability, and decrease cost of the housing. A POSA would understands that rings have multiple form factors and modifying the outer housing would have been well understood and be a predictable change.

Oura admits that Wissmar discloses a housing. RX-0326.190 at RFA No. 336.

Oura's expert, Dr. Rosing describes the ring components illustrated in Figs. 1 and 4 as being purportedly "black box" components which do not show how these components are interconnected RX-0411C.157 ¶ 369. Contrary to Dr. Rosing's position, a POSA would know that the components of Wissmar's ring would need to be connected to each other within the shells 1a and 1b, and that such connections can be adequately illustrated using the schematics shown in Figs. 1 and 4.

Dr. Rosing further opines that the welding of Wissmar's housing is only illustrated in Figs. 8 and 9 and that no other inner and out ring constructions are discussed by Mr. Alarcon. RX-0411C.158-66 ¶¶ 370-381. But Dr. Rosing ignores Wissmar's express disclosure of how various structural modifications to the described ring housing are discussed within Wissmar, and that such modifications would be evident to a POSA, particularly since manufacture of rings containing interior cavities for containment of electronic components is well known in the art. *See, e.g.*, RX-0016.1-26at Abstract, [0040], [0096], [0106]. Indeed, Wissmar also discloses that "the set of electronic and/or electromechanical components integrated in the ring may be easily adapted to the intended use of the ring." RX-0016.26 at [0106]. And such intended uses encompass a wide breadth of applications, including one or more of the following: controlling other electronic

[redacted]

devices, identification purposes, electronic payment, communication, as well as health and wellness monitoring. RX-0016.22 at [0040].

Wissmar provides exemplary illustrations of how the disclosures therein may be modified to provide additional embodiments (*e.g.*, RX-0016.25-26at [0096]-[0106]). For example, components can be mounted differently than as described, or on only one side of the fpcb (flexible printed circuit board). RX-0016.26 at at [0097]-[0098]. Accordingly, any assessment of Wissmar is to be viewed in light of Wissmar's statements that the wearable device is not limited to the embodiments as described but to variations thereof. However, Dr. Rosing's assessments of Wissmar have not appreciated the variations possible in light of Wissmar's express statements that such variations are permitted and within the scope of the disclosure. Thus, Oura fails to rebut Respondents' contention that Claim 1[a] is anticipated and/or rendered obvious over Wissmar.

3. Claim [1b]: Wissmar; Wissmar in view of the POSA's knowledge; and Wissmar in combination with Schröder discloses "an internal housing component defining an inner circumferential surface of the finger-worn wearable ring device, the internal housing component coupled with the external housing component, wherein at least a portion of the inner circumferential surface of the internal housing component is configured to contact a tissue of a user when the finger-worn wearable ring device is being worn by the user;"

Claim 1 recites "an internal housing component defining an inner circumferential surface of the finger-worn wearable ring device, the internal housing component coupled with the external housing component." Mr. Alarcon will testify that Wissmar provides such a disclosure. Mr. Alarcon will also testify that Wissmar as modified with the POSA's knowledge in limitation [1a] above discloses this limitation. Mr. Alarcon will also testify that Wissmar as modified with Schröder discloses this limitation.

Wissmar discloses that "FIG. 1 is a schematic profile view of the electronic finger ring where the electronic components are mounted on a flexible printed circuit board packaged inside

the torus shaped finger ring with a pressure sensor facing the inner boundary of the torus in accordance with an embodiment of the present invention." RX-0016.22-23 at [0051]. Wissmar states "FIG. 4 is a schematic profile view of the electronic components mounted on a flexible printed circuit board packaged inside a torus shaped finger ring with an alternative design having the pressure sensor being placed on the outer boundary of the torus." *Id.* at [0054]. Wissmar explains that it has "an inner boundary of the toroidal shaped finger ring structure 1" and "the outer boundary of the toroidal shaped finger ring structure 1." RX-0016.23-24at [0073].

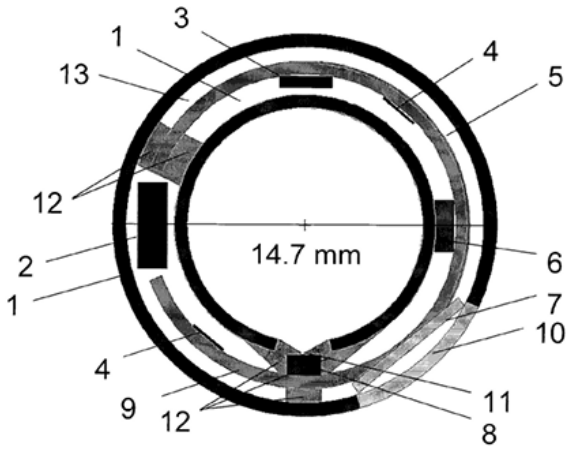

Fig. 1

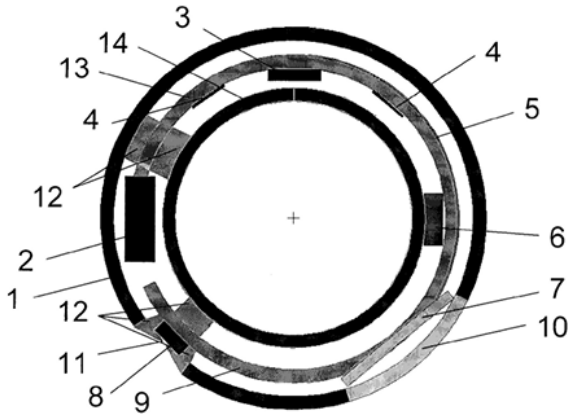

Fig. 4

RX-0016.2-5 at Figs. 1, 4.

Wissmar also discloses that the ring 1 includes "two different metallic shells: (i). 1a, made of gold (Au) or silver (Ag), enclosing the major parts of the finger ring structure geometrically described as radially furthest away from the toroids centre, and (ii). 1b, made of a titanium compound (Ti, TiW), being the metal enclosing facing the inner parts of the finger ring structure." RX-0016.23-24 at ¶ [0073]; *see also* RX-0016.28-29 at the claims. Wissmar states that "on the interfaces of the toroidal halves is a material" that enhances the welding between the joints disclosing that the internal and external housing components are connected by welding. RX-0016.22 at [0027], [0126].

[redacted]

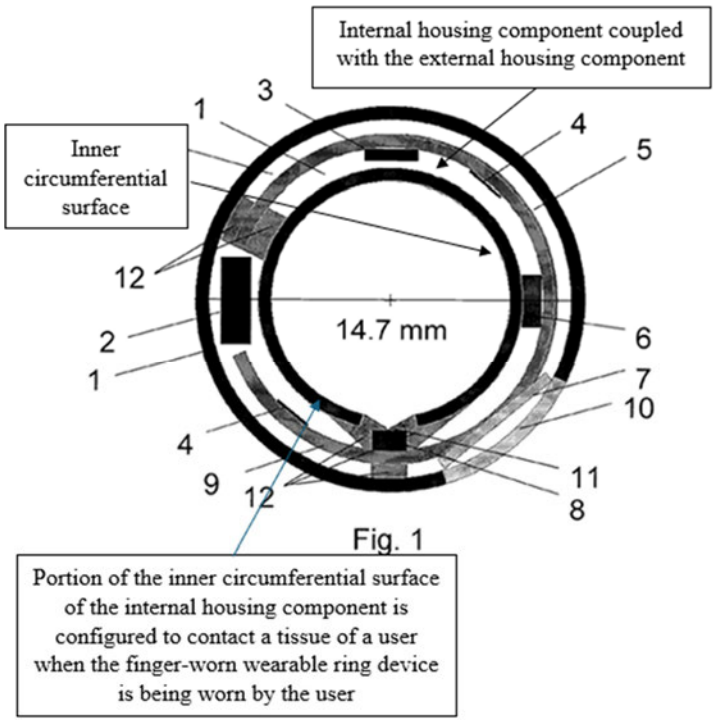

RX-0016.2 at Fig. 1 (annotated).

In addition, Wissmar describes its ring has having both "an inner boundary of the toroidal shaped finger ring structure 1" and "an outer boundary of the toroidal shaped finger ring structure 1." RX-0016.23-24 at [0073]. Wissmar's internal housing component has an inner circumferential surface with a window in it for the sensors 12 to acquire data through in the same manner as the patent has windows in its internal housing component to allow data acquisition. *See e.g.*, JX-0001.0010 at Fig. 3B. In that respect, a POSA would understand that the external housing component is a different structure than the internal housing component because the external housing component defines the outer circumferential surface and the internal housing component defines the inner circumferential surface. *See e.g*, JX-0001.0012-29 at Figs 4, 6,16, and corresponding text.

Moreover, as discussed above, Wissmar shows a housing structure that is welded together with multiple pieces and houses the internal components. The parties agreed that "coupled" in this

[redacted]

claim means "connected," and Wissmar's internal housing component and the external housing component are connected such that they are welded together and there is hermetic encapsulation. RX-0016.22 at [0027]. Mr. Alarcon will thus testify that, for at least the reasons discussed, Wissmar discloses "an internal housing component defining an inner circumferential surface of the finger-worn wearable ring device, the internal housing component coupled with the external housing component."

Indeed, the joint between the internal housing component and the external housing component is shown in Figs. 11 and 13.

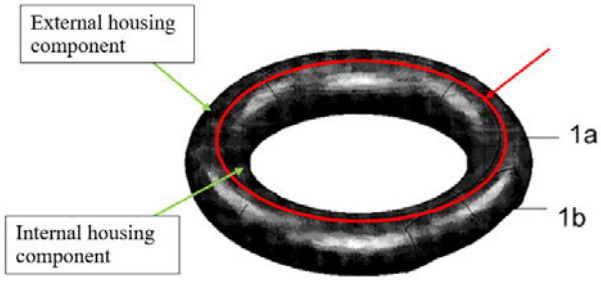

Fig. 11

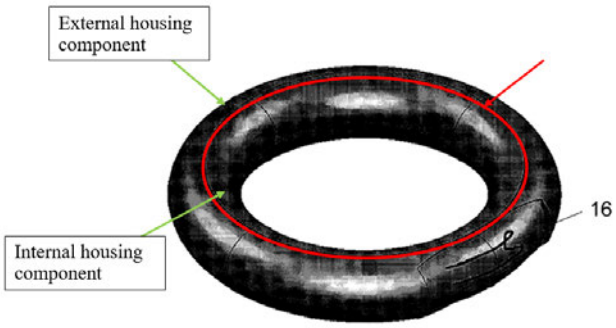

Fig. 13

RX-0016.12-14 at Figs. 11 and 13 (annotated). Wissmar's internal surface is circumferential because it is toroidal, has a circumference, and is thus curved.

In addition, claim 1 further recites, "wherein at least a portion of the inner circumferential surface of the internal housing component is configured to contact a tissue of a user when the finger-worn wearable ring device is being worn by the user." Mr. Alarcon will testify that Wissmar provides such a disclosure.

Specifically, Wissmar discloses that the ring 1 includes "two different metallic shells: (i). 1a, made of gold (Au) or silver (Ag), enclosing the major parts of the finger ring structure geometrically described as radially furthest away from the toroids centre, and (ii). 1b, made of a

[redacted]

titanium compound (Ti, TiW), being the metal enclosing facing the inner parts of the finger ring structure." RX-0016.23-24at [0073]; *see also* the claims. Wissmar also discloses that the ring 1 may include a pressure sensor 8 near an inlet hole. *Id*. In that regard, Wissmar also discloses that "[i]n FIG. 1, the pressure sensor 8 and the inlet hole are located so that the cavity housing the sensor 8 faces the inner circumference of the toroidal shaped finger ring structure 1. This location makes the pressure on the pressure sensor increase when the finger carrying the ring is bended since the tissue of the lower part of the finger then becomes compressed and expanded in its radial direction." RX-0016.24 at [0083].

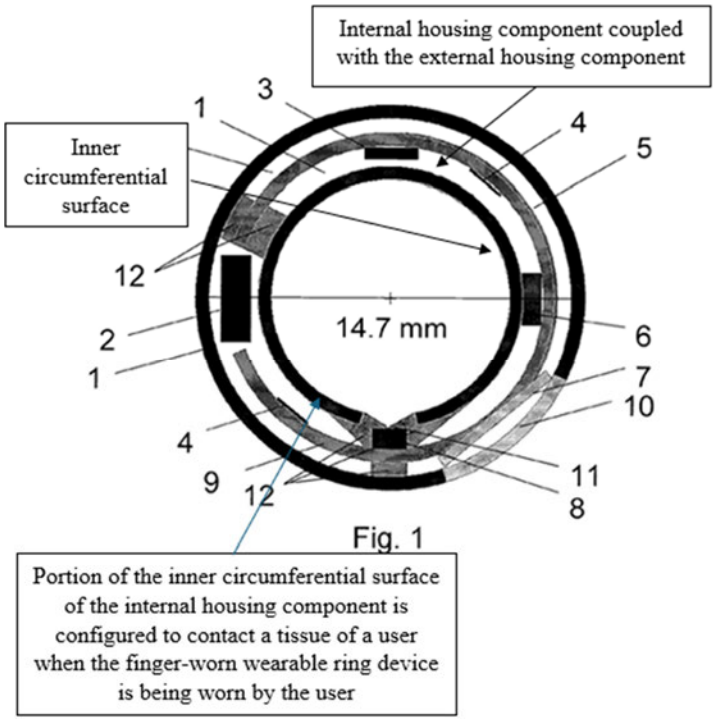

(RX-0016.2 at Fig. 1 (annotated).

Indeed, the title of Wissmar is "Electronic Finger Ring and the Fabrication Thereof," and its disclosure states: "The present invention relates to a toroidal finger ring, in particular to such an accessory comprising several electrical- and micromechanical components acting as a multiple sensor device communicating with nearby electronic devices wirelessly with e.g. bluetooth

technology." RX-0016.21at [0001]. Thus, a POSA would understand that the inner circumferential surface of the ring structure disclosed in Wissmar is configured to contact a tissue of the user when the finger-worn wearable ring device is being worn by the user.

It would also have been obvious to a POSA to couple together two separate and distinct internal and external housing components, depending on the specific design requirements, which would be a simple mechanical change. As described above, the claims, however, only require that the internal and outer housing components that are coupled or connected. *See also* JX-0001.0012-29 at Figs. 4, 6, and 16. First, there are only a finite number of ways to construct Wissmar's metallic shells 1a and 1b, and it would have been obvious to try the shells 1a and 1b as having separate and distinct internal and external components. Second, such a change was within the POSA's knowledge as evidenced by at least Schröder. *See* RX-0018.7 at Figs. 6-10.

For example, a POSA would have had a reasonable expectation of success in making such a modification because the dimensions of any of the components or shells 1a and 1b of Wissmar would not have to be modified. And neither would the overall design or function of Wissmar. The only modification is to manufacture Wissmar's external housing component separately and then couple the two separate components together, which was within the POSA's knowledge, as evidenced by the same modification disclosed by Fig. 8 in Schröder. In fact, Schröder discloses multiple different ways of creating circumferential ring housings using separate housing components—evidencing the simple mechanical nature of doing so. *See* RX-0018.6-7at Figs. 5-10.

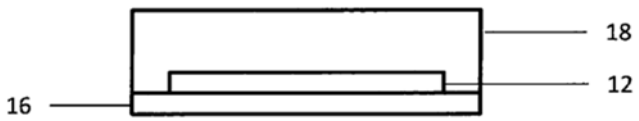

Fig. 8

[redacted]

RX-0018.7 at Fig. 8.

RX-0018.7 at Fig. 8 (annotated).

As depicted above in Schröder's Fig. 8, Schröder discloses a ring cross section with an external housing component, an internal housing component, a first wall, and a second wall. And the first and second walls are substantially perpendicular to one of the external housing component, the internal housing component, or both.

Thus, Mr. Alarcon will testify that Wissmar discloses an internal housing component defining an inner circumferential surface of the finger-worn wearable ring device.

Oura's expert, Dr. Rosing, alleges that Wissmar does not disclose or suggest element [1b], "an internal housing component defining an inner circumferential surface of the finger-worn wearable ring device." RX-0411C.156-66 ¶¶ 367-382. Dr. Rosing takes the position that Wissmar only describes two toroidal half-structures which are welded to form a toroid and that a POSA would not be able to alter this configuration to obtain a ring having inner and outer circumferences. *Id.* ¶ 374; *see also id.* ¶¶ 369-382. But Dr. Rosing ignores that Wissmar does not require that the wearable device be solely configured in a specific, set manner. Wissmar expressly teaches that other configurations that are within the scope of the invention and readily apparent to those skilled in the art.

[redacted]

4. Claim [1c]: Wissmar discloses "a battery positioned within a cavity formed between the internal housing component and the external housing component, wherein the battery comprises a shape and size configured to fit within the cavity between the outer circumferential surface of the external housing component and the inner circumferential surface of the internal housing component, and wherein the battery extends through at least a first portion of the cavity of the finger-worn wearable ring device;"

Claim 1 recites "a battery positioned within a cavity formed between the internal housing component and the external housing component, wherein the battery comprises a shape and size configured to fit within the cavity between the outer circumferential surface of the external housing component and the inner circumferential surface of the internal housing component, and wherein the battery extends through at least a first portion of the cavity of the finger-worn wearable ring device." Mr. Alarcon will testify that Wissmar provides such a disclosure. Mr. Alarcon will also testify that Wissmar as modified for limitation 1[a] discloses this limitation (the configuration of Wissmar's cavity would remain unchanged after modifying Wissmar to have internal and external separate and distinct components).

Specifically, Wissmar discloses "With reference to Figs. 1 and 2, a first embodiment of the present invention is a toroidal shaped finger ring structure 1, constituted of two different metallic shells…" RX-0016.23-24 at [0073]. The ring 1 includes a battery 2 positioned within a cavity between the inner and outer boundaries of the ring 1. The battery 2 is shaped and sized to fit within the cavity between the outer/inner circumferential surfaces of the housing. The battery 2 extends through at least a portion of the cavity. *Id*. Wissmar discloses that the battery **2** is located between the "inner boundary of the toroidal shaped finger ring structure **1**" and the "outer boundary of the toroidal shaped finger ring structure **1**." Wissmar at [0073].

[redacted]

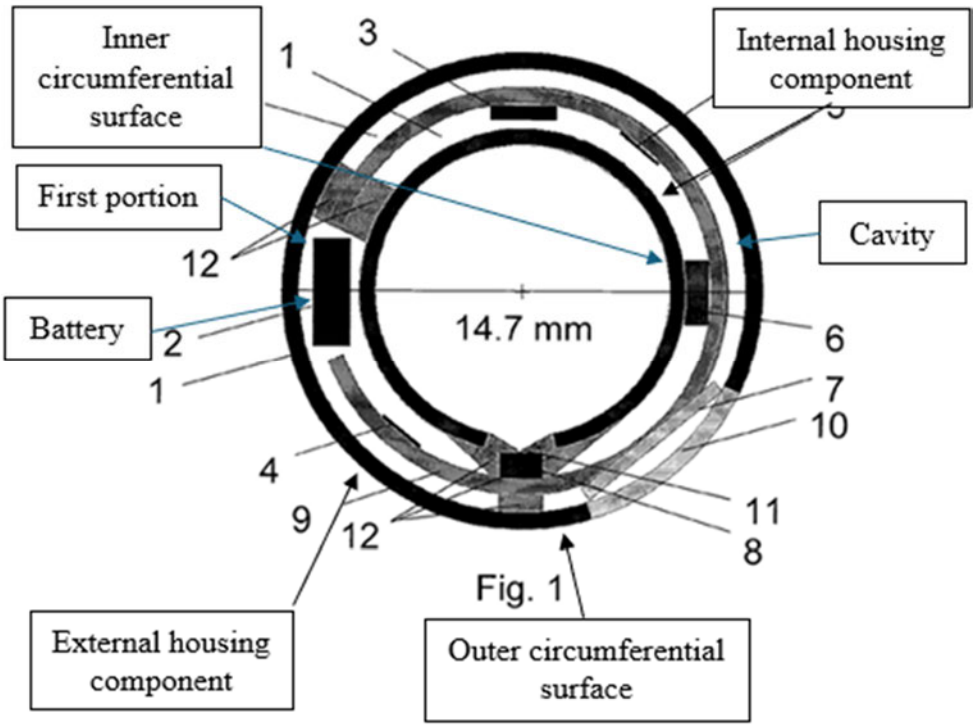

RX-0016.2 at Fig. 1 (annotated).

As depicted, the cavity in Wissmar extends around the inside of Wissmar's toroid and is where the components such as the PCB and the battery are located. The battery **2** is located in a first portion of Wissmar's cavity, as indicated above.

A POSA would have understood that by being disposed between the internal and external housing components, the battery extends through at least a first portion of the cavity and is of a size and shape in the cavity. A POSA would have also understood that placing the battery between the internal and external housing components means that the battery is positioned to extend through at least a first portion of the cavity because the cavity is designed to accommodate not only the battery but also other components and parts. A POSA would have further understood that this arrangement facilitates efficient connections from the battery in the first portion to other components situated in different portions of the device and allows for optimal power management and enhanced functionality. Additionally, this configuration improves accessibility for

replacement or maintenance of the battery (or other components), thereby extending the device's operational life and ease of service.

Indeed, Oura also admits that Wissmar discloses "a battery," (RX-0326.198-201 at RFA No. 351); "a cavity," (*id.* at RFA No. 352); and "a battery positioned within a cavity," (*id.* at RFA No. 355). Oura similarly admits that Wissmar discloses "components inside of a ring," (*id.* at RFA No. 353), and "space for components inside of a ring," (*id.* at RFA No. 354).

Oura's expert, Dr. Rosing, takes the position that Wissmar does not disclose or suggest internal and external housing components (elements [1a] and [1b], and therefore Wissmar does not disclose a battery positioned within a cavity formed by such internal and external housing components, as recited in element [1c]. RX-0411C.167-68 at ¶¶383-384. Contrary to Dr. Rosing's assertion, Mr. Alarcon will testify that Wissmar indeed shows internal and external housing components (as indicated above) and that Wissmar shows a battery located within the housing as recited in element [1c].

In that regard, to the extent Oura contends that Wissmar discloses that the battery must be located on the printed circuit board (*see* RX-0319C.74-75 at 292:20-293:18, 296:3-16) or that the arrangement of the electronic components in Wissmar is limited to arrangements disclosed in the Figures or any other "specific design" (*see* RX-0319C.75-76 at 296:18-297:3; *see also id.* at 305:2-14), such contentions are contradictory to Dr. Rosing's own report and deposition testimony. Specifically, Dr. Rosing's expert report contends that Wissmar does not "clearly indicate where or how the battery is placed." RX-0411C.68 at ¶123. Dr. Rosing has also admitted that "[t]here are a number of ways to arrange the internal components inside of the Wissmar toroidal device." RX-0319C.75 at 295:18-296:3. Yet, Dr Rosing extensively asserts that Wissmar is rigid in structure

and that the battery "MUST" be placed on the PCB (see RX-0319C.74-75 at 292:20-293:18, 296:3-16). Oura's positions are thus inconsistent and should be disregarded.

5. Claim [1d]: Wissmar discloses: "a printed circuit board disposed between the internal housing component and the external housing component, wherein the printed circuit board extends through at least a second portion of the cavity of the finger-worn wearable ring device different from the first portion; and"

Claim 1 recites "a printed circuit board disposed between the internal housing component and the external housing component, wherein the printed circuit board extends through at least a second portion of the cavity of the finger-worn wearable ring device different from the first portion." Mr. Alarcon will testify that Wissmar provides such a disclosure. Mr. Alarcon will also testify that Wissmar as modified for limitation 1[a] discloses this limitation (the configuration of Wissmar's printed circuit board would remain unchanged after modifying Wissmar to have internal and external separate and distinct components).

Specifically, Wissmar discloses that the ring 1 includes multiple components "mounted on a flexible printed circuit board **9**" disposed between the "inner boundary of the toroidal shaped finger ring structure **1**" and the "outer boundary of the toroidal shaped finger ring structure **1**." RX-0016.23-24 at [0073]. Wissmar discloses that "the components may be mounted on only one side of the fpcb along the circumference of the toroidal shaped fingering structure in order to obtain a lower cost fabrication solution." RX-0016.26 at [0098].

[redacted]

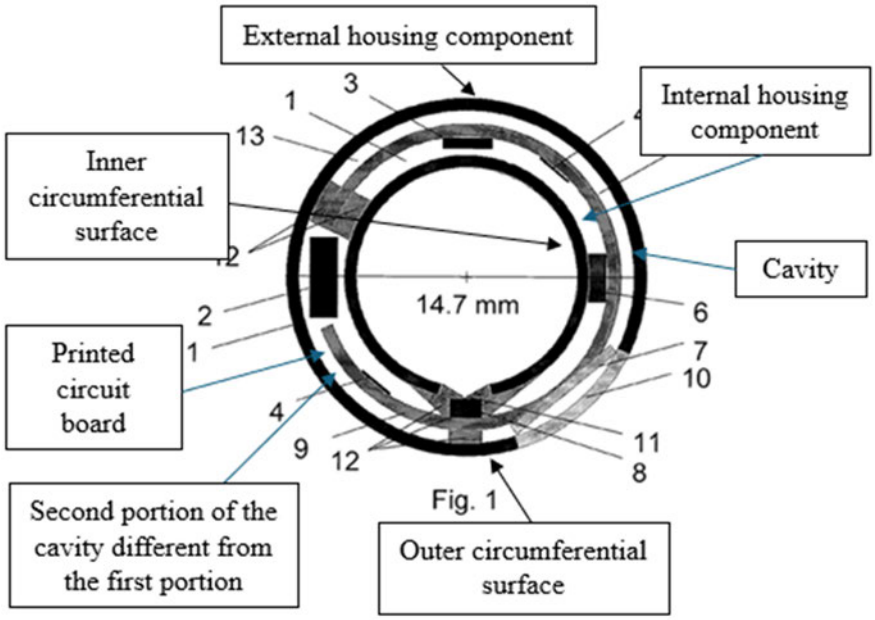

RX-0016.2 at Fig. 1 (annotated).

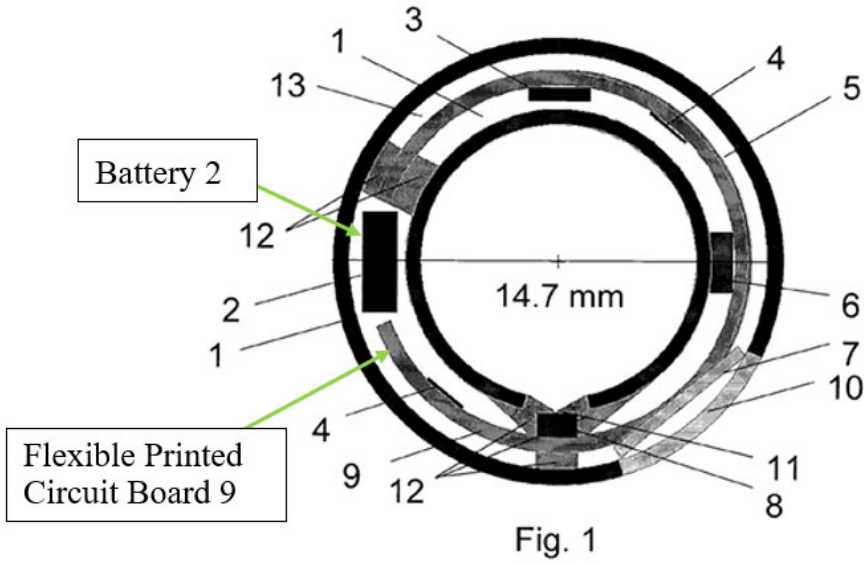

RX-0016.2 at Fig. 1 (annotated). The battery and PCB are in separate and non-overlapping portions of the cavity, as shown in Figure 1.

A POSA would have understood that Wissmar's battery does not overlap with the PCB. First, the battery 2 is illustrated as being physically separate from the flexible printed circuit board

9 in FIG. 1, with the other components are mounted to the PCB. Second, a POSA would understand that the battery is connected/mounted to the FPCB 9 by soldering its leads to the FPCB 9 to ensure the narrowest form factor of the ring possible. In such an embodiment, as illustrated in FIG. 1, the battery 2 and the FPCB 9 are in separate portions of the cavity. Other embodiments of Wissmar, *e.g.*, Fig. 4, shows the battery touching the PCB. A POSA would have thus understood that Wissmar is not limited, and it discloses both overlapping and non-overlapping positions of the battery.

Oura admits that Wissmar discloses "a printed circuit board disposed inside of its ring." RX-0326.206-07 at RFA No. 365.

Dr. Rosing, Oura's expert, contends that Wissmar's battery is mounted to the PCB and therefore these components are in non-overlapping portions of the cavity. RX-0411C.168-69 ¶¶ 385-388. As discussed above, to the extent Oura contends that Wissmar discloses that the battery must be located on the printed circuit board (*see* RX-0319C.74-75 at 292:20-293:18, 296:3-16) or that the arrangement of the electronic components in Wissmar is limited to arrangements disclosed in the Figures or any other "specific design" (*see* RX-0319C.75-76 at 296:18-297:3; *see also* RX-0319C.78 at 305:2-14), such contentions are contradictory to Dr. Rosing's own report and deposition testimony. Specifically, Dr. Rosing's expert report contends that Wissmar does not "clearly indicate where or how the battery is placed." RX-0411C.68 ¶123. Dr. Rosing has also admitted that "[t]here are a number of ways to arrange the internal components inside of the Wissmar toroidal device." RX-0319C.75 at 295:18-296:3. Yet, Dr Rosing extensively asserts that Wissmar is rigid in structure and that the battery "MUST" be placed on the PCB (*see* RX-0319C.74-75 at 292:20-293:18, 296:3-16). Oura's positions are thus inconsistent and should be disregarded.

Dr. Rosing's opinions are also directly contrary to the express disclosure of Wissmar. Indeed, as discussed, Wissmar makes clear that its disclosure is not limited, and that "as is readily appreciated by a person skilled in the art, other embodiments than the ones disclosed above are equally possible within the scope of the invention." RX-0016.25 at [0096]. Wissmar further discloses that "the set of electronic and/or electromechanical components integrated in the ring may be easily adapted to the intended use of the ring." RX-0016.26 at [0106]. Per Wissmar, such intended uses encompass a wide breadth of applications, including one or more of the following: controlling other electronic devices, identification purposes, electronic payment, communication, as well as health and wellness monitoring. RX-0016.22 at [0040]. Indeed, Wissmar's Abstract expressly states that it discloses an "electronic finger ring compris[ing] electronic components packaged and ***integrated in different ways*** to obtain either omni- or unidirectional RF transmission ***dependent on its application***." RX-0016.1at Abstract (emphasis added). Thus, to the extent any modification would need to be made to the ring structure of Wissmar, including with respect to the inclusion and arrangement of electronic components within the device, it would have been obvious to a POSA to make such modifications with a reasonable expectation of success in view of Wissmar's express disclosures.

6. Claim [1e]: Wissmar discloses: "one or more sensors electrically coupled with the printed circuit board and the battery and configured to acquire data from the user through the internal housing component."

Claim 1 recites "one or more sensors electrically coupled with the printed circuit board and the battery and configured to acquire data from the user through the internal housing component." Mr. Alarcon will testify that Wissmar provides such a disclosure. Mr. Alarcon will also testify Wissmar as modified for limitation 1[a] discloses this limitation (configuration of Wissmar's

[redacted]

internal electronic components would remain unchanged after including internal/external housing components to the extent necessary).

Specifically, Wissmar discloses that the ring 1 includes an accelerometer 6 and a pressure sensor 8 that is electrically coupled with the FPCB 9 and the battery 2. RX-0016.23-24 at [0073-75]. Wissmar further discloses: "In one embodiment, the aforementioned pressure sensor is located in a cavity within the electronic finger having the inlet hole facing the inner circumference opening optimized, as above described geometry, to function as a finger plethysmograph providing a non-invasive measurement for changes in finger blood flow reflected by pulse wave amplitude (PWA)." RX-0016.26 at [0103]. Wissmar also discloses: "In one embodiment, the aforementioned pressure sensor, when located in the cavity within the electronic finger having the inlet hole facing the inner circumference opening, could be replaced by a temperature sensor sensing the temperature of the fingering user." *Id.* at ¶ [0104].

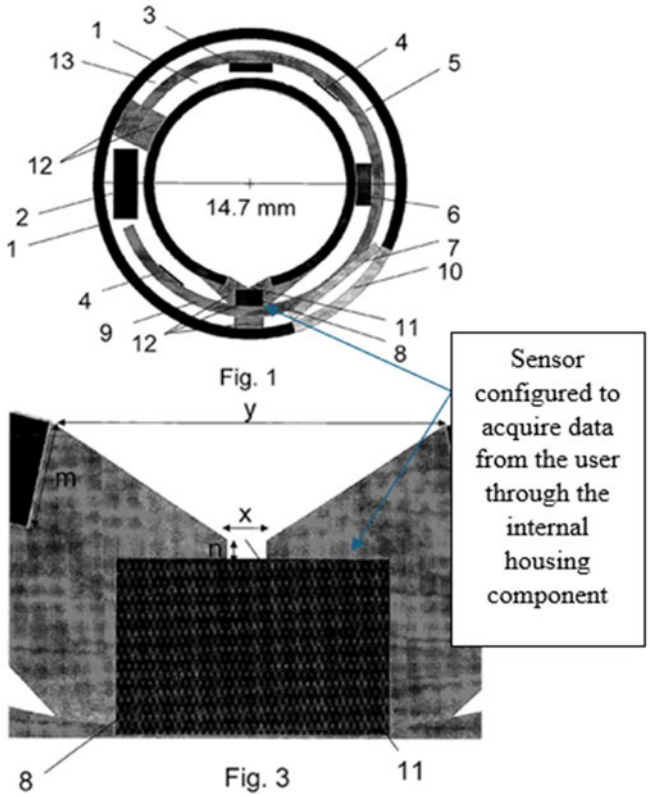

RX-0016.2-4 at Figs. 1, 3 (annotated).

Wissmar's pressure sensor 8 acquires data through the inner circumferential surface. Wissmar states "at the inner boundary of the toroidal shaped finger ring structure 1 located at the pressure sensor 8 there is an inlet hole shaped as a horn cone to maximize the pressure compression ratio at the pressure sensor end 11." RX-0016.23-24 at [0073]. Wissmar's pressure sensor acquires data through a window in the internal housing component in the same manner as described by the '178 patent. JX-0001.0012-29 at Figs. 4, 15, 16 and corresponding text.

Oura admits that Wissmar discloses "a sensor." RX-0326.208-09 at RFA No. 369.

Oura's expert, Dr. Rosing opines that Wissmar acquires data through an inlet hole formed as a horn cone in the toroidal ring, and thus doesn't satisfy the claim limitation. But the claim merely requires that the sensors are "configured to acquire data from the user through the internal housing component." And Wissmar teaches that the inlet hole and pressure sensor 8, which is what acquires the user data, are located at "the inner boundary of the toroidal shaped finger ring structure 1," and that the pressure sensor 8, specifically, is "permanently place[d] . . . [with] fixtures 12, [that] are casted as part of the metallic shell," such that a POSA would understand it to part of the shell itself.

7. Claim [2]: Wissmar discloses: "[t]he finger-worn wearable ring device of claim 1, wherein the first portion of the cavity of the finger-worn wearable ring device is non-overlapping with the second portion of the cavity of the finger-worn wearable ring device."

Claim 2 recites "[t]he finger-worn wearable ring device of claim 1, wherein the first portion of the cavity of the finger-worn wearable ring device is non-overlapping with the second portion of the cavity of the finger-worn wearable ring device." Mr. Alarcon will testify that Wissmar provides such a disclosure. Mr. Alarcon will also testify Wissmar as modified for limitation 1[a]

[redacted]

discloses this limitation (configuration of Wissmar's internal electronic components would remain unchanged after including internal/external housing components to the extent necessary).

For example, Wissmar discloses, "[w]ith reference to Figs. 1 and 2, a first embodiment of the present invention is a toroidal shaped finger ring structure 1, constituted of two different metallic shells…" RX-0016.23-24 at [0073]. The ring 1 includes a battery 2 positioned within a cavity between the housing components of the ring 1. The battery 2 is in the first portion of the cavity and the flexible printed circuit board 9 is in a second, non-overlapping portion of the cavity than the battery. *Id*.

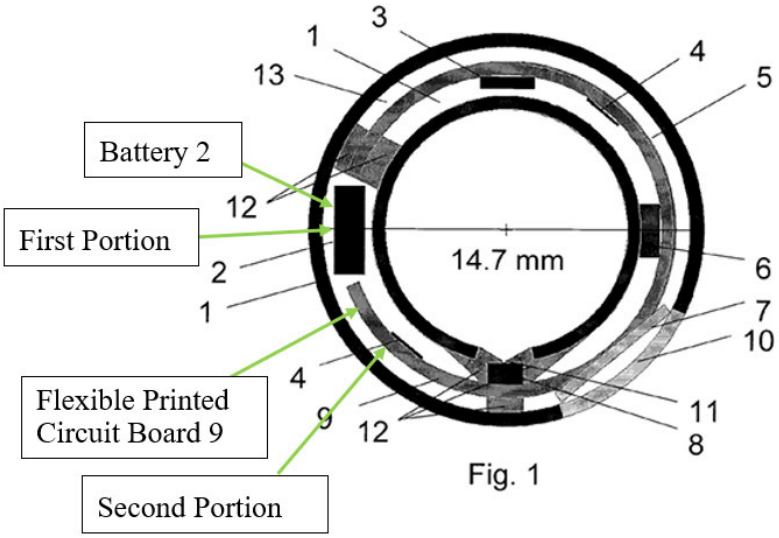

Fig. 1

RX-0016.2 at Fig. 1 (annotated). As depicted, the battery and PCB are in separate and non-overlapping portions of the cavity.

Moreover, claim 2 is, at minimum, obvious, at least because it would have been obvious to try. Indeed, Claim 2 recites: "The finger-worn wearable ring device of claim 1, wherein the first portion of the cavity of the finger-worn wearable ring device is non-overlapping with the second portion of the cavity of the finger-worn wearable ring device." Claim 3 recites "The finger-worn wearable ring device of claim 1, wherein the first portion of the cavity of the finger-worn wearable

ring device at least partially overlaps with the second portion of the cavity of the finger-worn wearable ring device." The battery and PCB are physical components that exist in the ring and can either overlap with each other or do not overlap with each other. Both are known number of finite solutions and obvious to try.

Oura's expert, Dr. Rosing, contends that Wissmar does not meet this limitation because "Wissmar discloses that the battery is disposed on the printed circuit board." RX-0411C.170 ¶ 396. Indeed, Dr Rosing extensively asserts that Wissmar is rigid in structure and that the battery "MUST" be placed on the PCB (*see* RX-0319C.74-75 at 292:20-293:18, 296:3-16).Yet, Dr. Rosing's expert report contends that Wissmar does not "clearly indicate where or how the battery is placed." RX-0411C.68 ¶123. Such positions are inconsistent, and should thus be disregarded.

Indeed, Dr. Rosing has also admitted that "[t]here are a number of ways to arrange the internal components inside of the Wissmar toroidal device." RX-0319C.75 295:18-296:3. This is also supported by the express disclosure of Wissmar. Indeed, as discussed, Wissmar makes clear that its disclosure is not limited, and that "as is readily appreciated by a person skilled in the art, other embodiments than the ones disclosed above are equally possible within the scope of the invention." RX-0016.25 at [0096].

Wissmar further discloses that "the set of electronic and/or electromechanical components integrated in the ring may be easily adapted to the intended use of the ring." RX-0016.26 at [0106]. Per Wissmar, such intended uses encompass a wide breadth of applications, including one or more of the following: controlling other electronic devices, identification purposes, electronic payment, communication, as well as health and wellness monitoring. RX-0016.22 [0040]. Indeed, Wissmar's Abstract expressly states that it discloses an "electronic finger ring compris[ing] electronic components packaged and ***integrated in different ways*** to obtain either omni- or

unidirectional RF transmission ***dependent on its application***." RX-0016.1at Abstract (emphasis added). Thus, to the extent necessary, a POSA would have at least been motivated to modify Wissmar's ring structure with a reasonable expectation of success in order to incorporate the components needed for a desired, intended use. Indeed, Wissmar provides numerous suggestions to modify the disclosed invention in order for the teachings therein to have broadest applicability.

8. Claim [12]: Wissmar in view of the POSA's knowledge; and Wissmar in combination with Other References discloses: "[t]he finger-worn wearable ring device of claim 1, wherein the battery comprises a curved battery, wherein an arc of the curved battery approximates a corresponding arc of the external housing component."

Claim 12 recites "[t]he finger-worn wearable ring device of claim 1, wherein the battery comprises a curved battery, wherein an arc of the curved battery approximates a corresponding arc of the external housing component." Mr. Alarcon will testify that Wissmar in view of the POSA's knowledge discloses this limitation. Mr. Alarcon will also testify that Wissmar in combination with Webster discloses this limitation. Mr. Alarcon will also testify that Wissmar in combination with Henderson discloses this limitation. Mr. Alarcon will also testify that Wissmar in combination with the GMBPow reference discloses this limitation. Mr. Alarcon will also testify that Wissmar as modified for limitation 1[a] (both with the POSA's knowledge and with Schröder) would have the same motivations and expectations of success of adding the various curved batteries (described below) as Wissmar alone.

For example, the '178 Patent explains that the battery "can be any type of battery, such as a rechargeable battery. The battery can be a thin, flexible lithium ceramic chemistry battery. In another example, the battery can be a circular formed lithium polymer or lithium ion battery. The battery can provide power to any of the components described above. In one example, the battery can be a lithium cell integrated directly with the flexible PCB described above. Other

[redacted]

implementations can integrate[] the battery directly onto the housing to reduce the volume of space taken up by battery packaging." JX-0001.0076 at 15:12-21.

In that regard, Wissmar discloses that the ring 1 includes a battery 2 positioned within a cavity between the inner and outer housings of the ring 1. The battery 2 is shaped and sized to fit within the cavity between the outer/inner circumferential surfaces of the shells 1a, 1b. The battery 2 extends through at least a portion of the cavity. *See, e.g.*, RX-0016.23-24 at [0073]. Wissmar also discloses a battery between the external housing component and the internal housing component. For example, Wissmar discloses that the ring 1 includes a battery 2 positioned within a cavity between the shells 1a, 1b of the ring 1. The battery 2 is shaped and sized to fit within the cavity between the outer/inner circumferential surfaces of the shells 1a, 1b. The battery 2 extends through at least a portion of the cavity. *Id.*

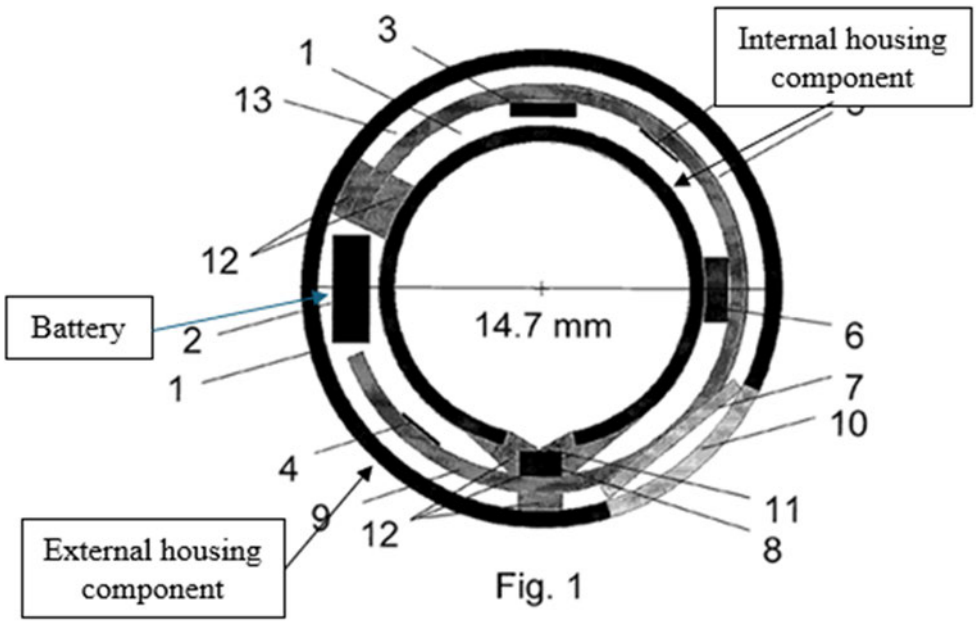

RX-0016.2 at Fig. 1 (annotated).

It would have been obvious in view of a POSA's knowledge and references discussed below for Wissmar to include a curved battery with an arc that approximates the corresponding arc of the external housing component. A POSA would naturally look to find a battery that fits

[redacted]

inside of Wissmar's ring housing and that would be a battery that includes an arc that approximates the arc of the housing. Using a curved battery is nothing more than ordinary mechanical skill. This would maximize battery capacity while still fitting inside of the housing. Indeed, a POSA in November of 2013 would have used a curved battery in the housing with an arc that approximated the arc of the external housing component and was a size and shape configured to fit in Wissmar's cavity.

Moreover, Webster discloses a ring 100 including a flexible circuit board 102. The flexible circuit board 102 supports a radio frequency device 200 which includes, among other things, a battery 212. RX-0011.10-12 at 1:40-61, 5:8-12. "A battery 212 together with voltage regulation circuitry can supply the proper voltage to each of the circuit elements. The battery 212 can, in one embodiment, be a thin film lithium ion or zinc-manganese dioxide chemistry battery that can be bent or curved. RX-0011.12 at 5:8-12. It would have been obvious to use Webster's battery in Wissmar because it naturally would have fit inside of Wissmar's housing and doing so would increase the battery capacity and life of the device.

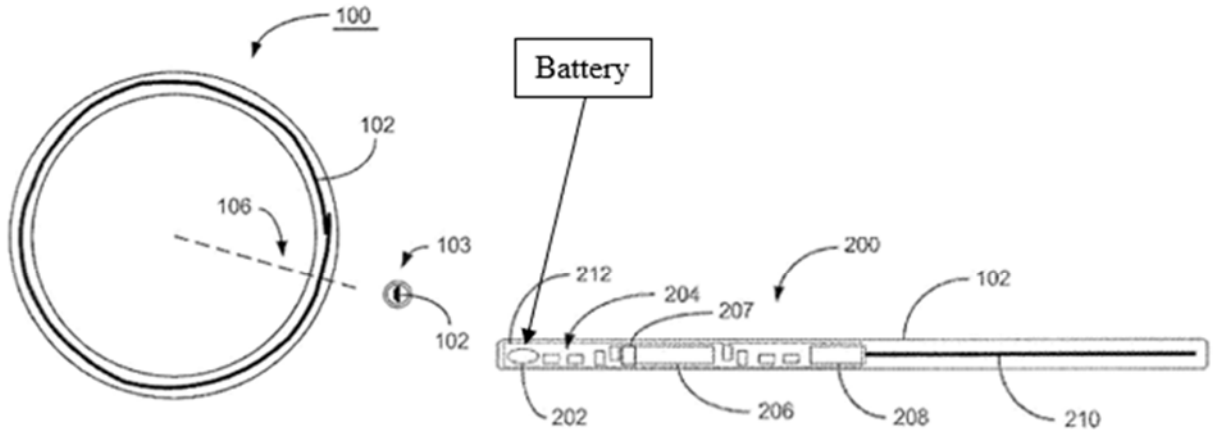

FIG. 1 FIG. 2A

RX-0011.2-3 at FIGS. 1 and 2A (annotated).

[redacted]

In addition, Henderson is directed to batteries and power management in a ring-shaped activity monitoring device with curved batteries that measures various biometric information. Henderson states that its "batteries 142 have a curvilinear or curved configuration" that "are generally flush with the inner surface 32 of the spine member 22," which is curved. RX-0012.30 at [0077]. Henderson also discloses "the device may include one or more functional batteries of a curved profile," and discloses how to make curved batteries. RX-0012.37 at [0125]. "Accordingly, the device may include one or more functional batteries of a curved profile." *Id*. A POSA would have understandood from Henderson's disclosure that a ring, similar to an oval/bracelet, would "require[] a volume of space allocated to the batteries to also take this curved or radial profile." *Id*. It would have been obvious to a POSA to use Henderson's battery in Wissmar because Henderson teaches that its battery can be different sizes and would have naturally contoured to fit inside of Wissmar's housing and doing so would increase the battery capacity and life of the device. RX-0012.30-31 at ¶ [0078].

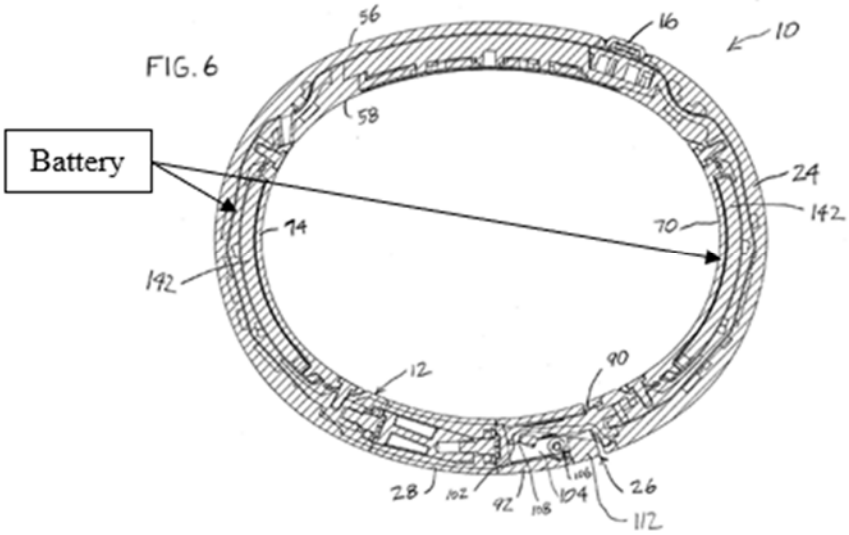

RX-0012.5 at Fig. 6 (annotated). A POSA would also have had a reasonable expectation of success in making such modification, to the extent necessary, at least because Wissmar teaches "that the

[redacted]

set of electronic and/or electromechanical components integrated in the ring may be easily adapted to the intended use of the ring," and that "other embodiments" of Wissmar would have been "readily appreciated by a person skilled in the art." RX-0016.25-26 at [0106], [0096].

A POSA would have also understandood that the Nike+ FuelBand is the real life embodiment of Henderson, which was filed by Nike. The Nike+ FuelBand was a product that had curved batteries and was released prior to 2013, as evidenced by this 2012 YoutTube teardown. RX-0032.

RX-0032 at 03:18, 03:56.

Moreover, the '178 Patent explains that the battery "can be any type of battery, such as a rechargeable battery. The battery can be a thin, flexible lithium ceramic chemistry battery. In another example, the battery can be a circular formed lithium polymer or lithium ion battery. The battery can provide power to any of the components described above. In one example, the battery can be a lithium cell integrated directly with the flexible PCB described above. Other implementations can integrate[] the battery directly onto the housing to reduce the volume of space taken up by battery packaging." JX-0001.0076 at 15:12-21. These types of curved batteries disclosed in the '178 were within the POSA's knowledge as evidenced by: GMBPower batteries that were curved and commercially available. RX-0030.5-7.

GMBPower had a Lithium Polymer Battery for sale in on October 21, 2013, that "can be made at clients requirement." RX-0030.5. The battery was "[b]endable, rechargeable, thin, light, and with long shelf life." The smallest listed lithium curved battery for sale was 2.0 mm thick, 10 mm wide, and 21 mm long. The specification states that "By way of non-limiting example, the WCD interior diameter d1 (the diameter generally defining the ring size) can be in an approximate range of 12 mm to 24 mm so as to accommodate finger sizes ranging from a small child to a larger adult, and on any acceptable finger, including the thumb. The exterior diameter d2 can also be any reasonable size or shape, and can define an approximate range of between 18 mm and 30 mm. Likewise, the thickness between diameters dl and d2 can vary widely, but can typically reside in an approximate range of 1.5 mm to 3 mm. The width WR of the WCD along the direction of finger extension (finger longitudinal direction) is widely variable, and can be selected, in part to accommodate internal and external components. In a non-limiting example, the width WR is in a range of approximately 3 mm to 8 mm." 'JX-0001.0077 at 17:4-18. Thus, GMBPow batteries were of the correct size to fit inside of finger-worn rings, including that of Wissmar, which is of approximate size to the rings described by the '178 patent because both are rings that need to fit on the finger. It would be obvious and easy to swap out Wissmar's battery to connect the GMBPow battery. The only other modification would be to shorten Wissmar's PCB slightly to allow for more room for the battery. Both of these changes would be of ordinary mechanical skill. The POSA would be motivated to use the GMBPow curved battery in Wissmar to increase the battery life of Wissmar's ring, improving convenience to the user.

Furthermore, a POSA would have been motivated to place a curved battery "wherein an arc of the curved battery approximates a corresponding arc of the external housing component" by simply examining the curved housing and selecting a battery to mirror the size and shape of the

[redacted]

curved housing. Eric Strasser, a founder of Motiv, described the obvious nature of developing the battery for the ring:

> Q. And the idea of a curved battery is from the idea that you have a curved housing; is that right?
> A. Correct, we wanted to create a product that looked like a ring.
> Q. And so for a battery to be used in a curved housing, the battery would also need to be curved?
> A. Correct.

RX-0321C.49 at 191:6-14; *See also id*. at 190:16-23.

Mr. Strasser also testified that others already "knew how to [make the curved battery]" and "they already had the process in place." And that the battery manufacturer "had product that we identified as the solution to what we were looking for," "had the experience of building it," and "they had batteries small enough to fit in a wearable device which could be constructed as a ring" when the inventors approached this company. RX-0321C.50-53 at 194:9-14, 205:9-16. To the extent that Oura argues that non-ring devices are inapplicable the inventors looked to other to find the ultimate battery manufacturer for the inventors' product. RX-0321C.50 at 195:23-196:7. Eric Strasser and the inventors of the '178 Patent viewed wrist and other wearable devices as analogous prior art. *See* CX-1099C; RX-0321C.29 at 112:8-16.

Moreover, the '178 Patent discloses that the components in the finger-worn device of the '178 Patent were transferable to wrist and arm form factors, demonstrating the analogous nature between wrist and ring wearable technology. "Although the WCD of the present disclosure is depicted as a ring that can be worn on the finger of a user, other shapes, designs, and form factors can be utilized for the WCD. For example, the WCD can be in the form of a wrist band, bracelet, necklace, earring, or any other type of wearable accessory. In this regard, references to the finger of a user in the present application can be considered to apply to other portions of a human body depending on the form of the WCD, such as wrist, neck, ear, etc." JX-0001.0072-73 at 8:66-9:7.

Thus, teachings from other wearables are applicable to the batteries in a finger-worn wearable ring device.

Oura's expert, Dr. Rosing, alleges that Wissmar, alone or in view of the POSA's knowledge and other references, does not render Claim 12 obvious in that there are various issues associated with curved batteries including low power and requirements for fitting into a curved space. RX-0411C.172-76 ¶¶ 402-416. However, a POSA would have been motivated to employ a curved battery inside the ring housing, for example, as curved batteries were known prior to the '178 Patent's priority date. Indeed, Wissmar provides numerous suggestions for modification of the disclosed wearable device so that the teachings therein have broadest applicability and that a POSA would understand that the available space for a battery within a device will affect considerations such as its size, shape, and capacity, and modification of such parameters is well within the scope of the POSA's knowledge.

In addition, a POSA would have understood that the arc of a curved battery allows for more battery surface area while taking up the same lateral space that an equivalent flat battery would—directly resulting in more capacity and battery life. Moreover, as evidenced by the above disclosures (specifically Henderson, Webster, and the Nike Fuel Band), examples of curved or flexible batteries existed prior to November 2013. And a POSA would have understood that because those batteries existed, the technology existed, and that sizes appropriate for a ring of those batteries would be out in the marketplace, too. RX-0449C.26-27 at 100:2-101:3; *see also id.* at 90:10-91:3 ("[A] POSA would understand that batteries can come in different sizes, lengths, thicknesses.") Indeed, Mr. Alarcon will provide an example that would fit in a finger ring (according to the '178 Patent)—the GMBPow described above. RX-0003C.65-67 at ¶¶ 100-102.

[redacted]

9. Claim [13]: Wissmar in combination with Yuen discloses: "[t]he finger-worn wearable ring device of claim 1, wherein the one or more sensors comprise a first light-emitting component configured to emit light associated with a first wavelength, and a second light-emitting component configured to emit light associated with a second wavelength different from the first wavelength."

Claim 13 recites "[t]he finger-worn wearable ring device of claim 1, wherein the one or more sensors comprise a first light-emitting component configured to emit light associated with a first wavelength, and a second light-emitting component configured to emit light associated with a second wavelength different from the first wavelength." Mr. Alarcon will testify that Wissmar in view of Yuen renders this claim obvious. Mr. Alarcon will also testify that Wissmar as modified for limitation 1[a] (to the extent necessary) would have the same motivations and expectations of success as combining Wissmar alone with Yuen (discussed below)—and discloses this limitation.

To the extent Wissmar does not disclose the one or more sensors comprise a first light-emitting component configured to emit light associated with a first wavelength, and a second light-emitting component configured to emit light associated with a second wavelength different from the first wavelength, these features would have been obvious in view of Yuen.

Yuen discloses a biometric monitoring device having heart rate monitoring functionality. More specifically, Yuen discloses a portable biometric monitoring device, such as a smart watch or band, including at least one physiological sensor configured to generate data which is representative of a physiological condition of the user data. For example Yuen discloses, "[t]he physiological sensor may include a light source to generate and output light having at least a first wavelength, and a photodetector to detect scattered light (e.g., from the user)." RX-0013.1 at Abstract. Yuen further discloses, "[p]rocessing circuitry calculates a heart rate of the user using data which is representative of the scattered light." *Id*.

[redacted]

Indeed, the device uses light sources with specific wavelengths tailored to different physiological data. For example, Yuen discloses that green light detects heart rate, while red and infrared light measure SpO2. RX-0013.38 at 10:22-42.

Moreover, as disclosed in one embodiment, the device adjusts the LED light wavelength based on the physiological data being collected or operational conditions. For example, it may switch from infrared to green light to improve heart rate signal quality in cooler temperatures. RX-0013.38 at 10:43-54.

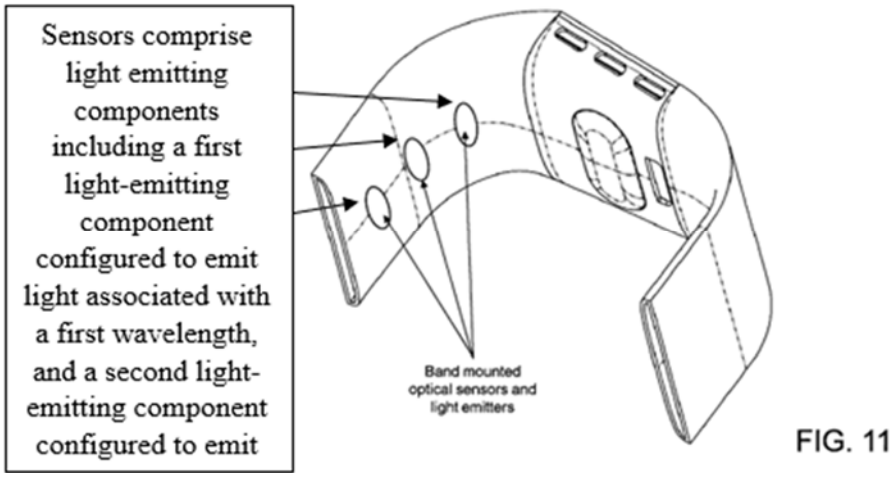

RX-0013.14 at Fig. 11 (annotated).

Oura also admits that Yuen discloses "a light emitting component configured to emit an infrared wavelength," and "a light emitting component configured to emit a visible light wavelength." RX-0326.398-99 at RFAs Nos. 711, 712. Oura further admits that Yuen discloses "a light receiving component." *Id.* at RFA No. 713.

In view of at least these teachings, it would have been obvious to a POSA to modify the ring of Wissmar to include one or more sensors comprising a first light-emitting component configured to emit light associated with a first wavelength, and a second light-emitting component configured to emit light associated with a second wavelength different from the first wavelength.

At a minimum, this modification is a known technique for collecting a specific type of physiological data as taught by Yuen. Configuring the ring of Wissmar to include these features is also a combination of previously known elements that would have yielded predictable results. This is particularly true in view of Wissmar's express teachings that various embodiments of its ring device are known and within the skill in the art, and that its ring device, including the electronic components contained therein, may be "easily adapted" to a broad range of intended uses. RX-0016.22-26 at [0106], [0040], [0096].

A POSA would have also been motivated to modify the pressure sensor of Wissmar into PPG sensors to acquire an accurate blood flow reading. Wissmar already discloses a FCPB, a processor, a battery, and one or more sensors disposed in a cavity. Wissmar states that it provides "for continuous measurement and diagnosis of a user's health state." RX-0016.22 at [0040]. Wissmar also states that it's "pressure sensor may function as a finger plethysmograph providing a non-invasive measurement for changes in finger blood flow reflected by pulse wave amplitude (PWA)." RX-0016.21 at [0019]. And finger worn rings with PPG sensors were already known in the art as evidenced by U.S. Pat. Pub. No. 5,964,701 to Asada and U.S. Pat. Pub. No. 2012/0016245 to Niwa. RX-0010; RX-0015. This would improve the overall functionality and desirability of Wissmar's ring.

10. Claim [14]: Wissmar in combination with Yuen discloses: "[t]he finger-worn wearable ring device of claim 13, wherein the first wavelength is associated with visible light, and wherein the second wavelength is associated with infrared light."

Claim 14 recites "[t]he finger-worn wearable ring device of claim 13, wherein the first wavelength is associated with visible light, and wherein the second wavelength is associated with infrared light." Mr. Alarcon will testify that Wissmar in view of Yuen renders this claim obvious. Mr. Alarcon will also testify that Wissmar as modified with the POSA's knowledge and as

modified with Schröder as described for limitation 1[a] discloses this limitation. Those two modified versions of Wissmar would also have the same motivations and expectations of success as Wissmar alone (discussed below).

Wissmar as previously modified by Yuen discloses the first wavelength is associated with visible light, and wherein the second wavelength is associated with infrared light." For example, the device of Yuen uses light sources with specific wavelengths tailored to different physiological data. For example, green light detects heart rate, while red and infrared light measure SpO2. RX-0013.38 at 10:22-42.

In one embodiment, the device adjusts the LED light wavelength based on the physiological data being collected or operational conditions. For example, it may switch from infrared to green light to improve heart rate signal quality in cooler temperatures. RX-0013.38 at 10:43-54. In view of at least these teachings, it would have been obvious to modify the ring of Wissmar such that the first wavelength is associated with visible light, and wherein the second wavelength is associated with infrared light. At a minimum, this modification is a known technique for collecting a specific type of physiological data as taught by Yuen. Configuring the ring of Wissmar to include these features is also a combination of previously known elements that would have yielded predictable results.

Notably, Dr. Rosing does not provide any particular arguments addressing any purported non-obviousness of claim 14 but rather relies on the arguments presented in connection with claim 13. RX-0411C.179 ¶¶ 427-428. For the reasons already explained, claim 13 is obvious, and thus, Oura has failed to rebut Respondents' arguments.

[redacted]

11. Claim [17]: Wissmar in view of the POSA's knowledge; and Wissmar in combination with Schröder discloses: "[t]he finger-worn wearable ring device of claim 1, wherein the external housing component and the internal housing component define the cavity configured to at least partially surround the battery, and the printed circuit board, wherein one of the external housing component or the internal housing component comprises: a first side wall and a second side wall that extend between the internal housing component and the external housing component, wherein the cavity is defined at least in part by the outer circumferential surface, the inner circumferential surface, the first side wall, and the second side wall."

Claim 17 recites "[t]he finger-worn wearable ring device of claim 1, wherein the external housing component and the internal housing component define the cavity configured to at least partially surround the battery, and the printed circuit board, wherein one of the external housing component or the internal housing component comprises: a first side wall and a second side wall that extend between the internal housing component and the external housing component, wherein the cavity is defined at least in part by the outer circumferential surface, the inner circumferential surface, the first side wall, and the second side wall." Mr. Alarcon will testify that Wissmar in combination with the POSA's knowledge discloses this limitation. Mr. Alarcon will also testify that Wissmar in combination with Schröder discloses this limitation. Both would have the same motivations to combine and expectations of success (discussed below and for limitations 1[a] and 1[b]).

Wissmar discloses that "FIG. 1 is a schematic profile view of the electronic finger ring where the electronic components are mounted on a flexible printed circuit board packaged inside the torus shaped finger ring with a pressure sensor facing the inner boundary of the torus in accordance with an embodiment of the present invention." RX-0016.22-23 at [0051]. Wissmar states "FIG. 4 is a schematic profile view of the electronic components mounted on a flexible printed circuit board packaged inside a torus shaped finger ring with an alternative design having the pressure sensor being placed on the outer boundary of the torus." *Id.* at [0054]. Wissmar

[redacted]

explains that it has "an inner boundary of the toroidal shaped finger ring structure 1" and "the outer boundary of the toroidal shaped finger ring structure 1." RX-0016.23-24 at [0073].

The ring 1 of Wissmar includes "two different metallic shells: (i). 1a, made of gold (Au) or silver (Ag), enclosing the major parts of the finger ring structure geometrically described as radially furthest away from the toroids centre, and (ii). 1b, made of a titanium compound (Ti, TiW), being the metal enclosing facing the inner parts of the finger ring structure." Wissmar at ¶ [0073].

Wissmar in view the POSA's knowledge; and Wissmar in combination with Schröder, would have a first side wall and second side wall, at least defined by the outer circumferential surface, the inner circumferential surface, the first side wall, and the second side wall. Schröder at FIG. 8. As described in the analysis of claim 1, a POSA would be motivated to use the housing structure and shape of Schröder to allow for easier/simpler manufacture. It also would increase wearability and comfort for the user. And the housing shape and structure of Wissmar could be easily adapted to the one disclosed in Schröder because Wissmar already has separate components that enclose and form a cavity.

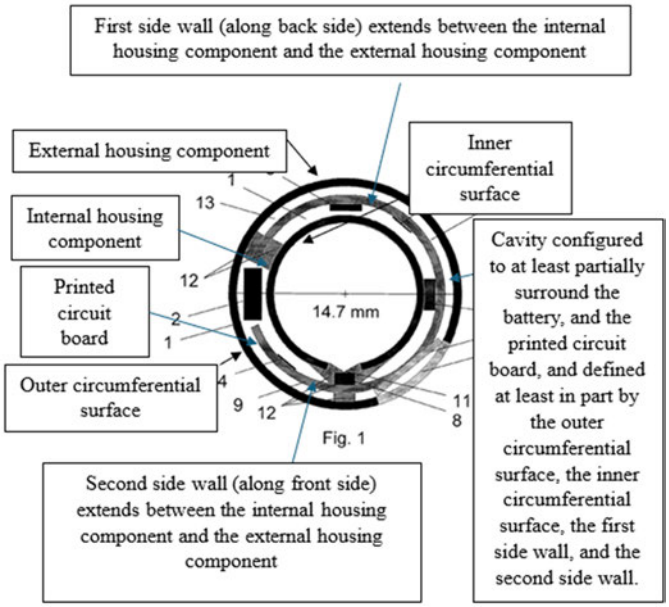

RX-0016.2 at Fig. 1 (annotated).

Dr. Rosing states that a POSA would not have been motivated to combine Wissmar's disclosure of a toroidal ring that lacks side walls with Schröder in order to arrive at a wearable device which has side walls and internal and external housing components. RX-0411C.179-81 ¶¶ 429-435. In particular, Dr. Rosing states that such a modification would modify the shape of Wissmar's outer shell that can function as a toroid antenna and that Mr. Alarcon has not noted how a POSA would maintain this functionality while using the housings disclosed in Schröder, or how Wissmar's various electrical components "would fit in the same space as the inlay of Schröder, which only is disclosed as carrying an antenna for NFC applications." RX-0411C.180 ¶¶ 433-434. But Dr. Rosing once again disregards Wissmar's express statements that the actual order and placement of the respective components are optimized to obtain the desired functionality and packaging inside the toroidal shaped ring. *See, e.g.*, RX-0016.24 at ¶ [0074]. Indeed, Wissmar makes clear that other embodiments than those expressly disclosed would have been "readily appreciated by a person skilled in the art," such that a POSA would have been motivated to make any modifications to Wissmar as necessary to achieve an intended design, as contemplated by Wissmar. RX-0016.25 at [0096]; *see also* RX-0016.1 at Abstract; RX-0016.25 at [0106].

12. Claim [18]: Wissmar in view of the POSA's knowledge; and Wissmar in combination with Schröder renders discloses: "[t]he finger-worn wearable ring device of claim 17, wherein the first side wall, the second side wall, or both, are substantially perpendicular to the inner circumferential surface, the outer circumferential surface, or both."

Claim 18 recites "[t]he finger-worn wearable ring device of claim 17, wherein the first side wall, the second side wall, or both, are substantially perpendicular to the inner circumferential surface, the outer circumferential surface, or both." Mr. Alarcon will testify that Wissmar in view of the POSA's knowledge discloses this limitation. Mr. Alarcon will also testify that Wissmar in combination with Schröder discloses this limitation. Mr. Alarcon will also testify that Wissmar as

[redacted]

modified (both with the POSA's knowledge and in combination with Schröder) discloses this limitation.

As discussed above with respect to claim 17, Wissmar discloses the first side wall, the second side wall, or both. The first side wall and second side wall or both are substantially perpendicular to the inner circumferential surface, the outer circumferential surface, or both. The first side wall and the second side wall would be substantially perpendicular to the inner circumferential surface, the outer circumferential surface, or both.

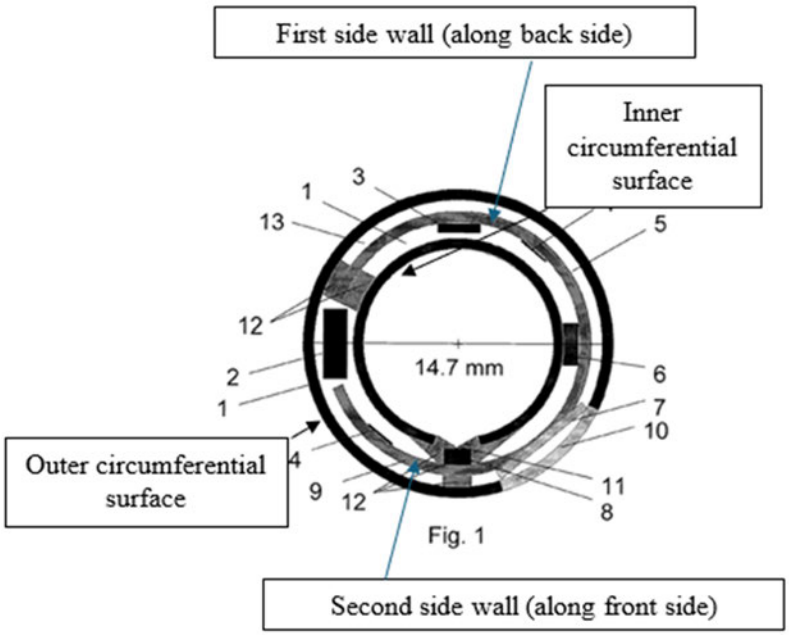

RX-0016.2 at Fig. 1 (annotated).

Dr. Rosing does not provide any particular arguments addressing any purported non-obviousness of claim 18, but rather relies on the arguments presented in connection with claim 17. RX-0411C.181 ¶¶ 436-438. For the reasons already explained, claim 17 is obvious, and thus, Oura has failed to rebut Respondents' arguments.

[redacted]

13. Summary

For example, each of the cited references (e.g. Wissmar, Schröder, and Yuen, and Niwa) encompass portable, electronic communication devices, that comprise, among other things, sensors and other electronic components designed to obtain and transmit data. In fact, these references and the '178 Patent all expressly disclose wearable electronic devices designed to obtain and communicate a user's biological information.

Accordingly, each of the cited references (e.g. Wissmar, Schröder, and Yuen, and Niwa) are analogous art to the claimed invention because they are either all from the same field art and/or are at least "reasonably pertinent" to the problems faced by the inventors of the '178 Patent. A POSA would have thus been motivated to combine their teachings and would have had a reasonable expectation of success in doing so.

J. Secondary Considerations

Complainants assert that the innovations in the Asserted Claims led to the following secondary factors of its "Oura Ring and application" which they allege support non-obviousness: (1) commercial success; (2) long felt but unmet needs; (3) failure of others; (4) praise by others; and (5) unexpected results. RX-0331. Complainants further asserted industry skepticism and recognition of a problem as secondary factors of non-obviousness without any evidentiary support. *Id.* None of these secondary considerations support the non-obviousness of the asserted claims of the '178 Patent.

It is Complainants' burden to identify and establish support for any alleged secondary considerations. In particular, Complainants must show that there is a relationship between any secondary consideration and the claimed invention.

The claims of the '178 Patent are not linked to any commercial success or praise by others identified by Complainants. The products identified by Complainants include many features, and

there is no indication—let alone evidence—that any commercial success or industry praise is due to the asserted claims. Furthermore, the Oura Ring did not meet any long felt but unmet need because there were other rings before it which incorporated the claimed subject matter of the '178 Patent; the results of the Oura Ring were expected; and Complainants have not shown that Oura's design has been copied by others.

Thus, Mr. Alarcon will testify that none of the identified secondary considerations support non-obviousness of claim 1, 2, 12, 13, 14, 17, or 18 of the '178 Patent.

1. Any alleged commercial success and purported praise by others of the Oura Ring were due to factors unrelated to the subject matter claimed in the '178 Patent.

The subject matter of the asserted claims concerns the structure of a wearable-ring device. *See* Asserted Claims. Motiv Inc., the applicant of the '178 Patent's grandparent patent, came out with their own ring incorporating technology disclosed and claimed in the '178 Patent. *See* '034 patent. And the named inventors of the '178 Patent are three of the four co-founders of Motiv: Peter Twiss, Curt Von Badinksi, and Michael Strasser. *See* '178 Patent. The Motiv Ring had an internal housing component defining an inner circumferential surface and an outer housing defining an outer circumferential surface. *See* RX-0035; Von Badinksi Tr. at 40:7-11; E. Strasser at 16-21.

Despite using the technology claimed in the '178 Patent, Motiv, Inc.'s Motiv Ring was not a commercial success. *See* M. Strasser Tr. at 76:8-22 (Motiv co-founder testifying that Motiv sold less than . The fact that the Motiv ring was not successful, which was a product created using the technology claimed in the '178 Patent, demonstrates that any

commercial success asserted by the Complainants for the Oura Ring is not attributable to the subject matter claimed in the '178 Patent, but rather to other external factors such as marketing.

In particular, the most significant differentiator between Oura and Motiv is Oura's ability to market its product. From the start, Oura's strong suit has been its ability to market—which explains why Oura was successful and Motiv was not even though both developed smart rings that used technology claimed in the '178 Patent. *See* Chapp Tr. at 232:8-20 (

And up to and through 2023, marketing remains a key aspect and heavy focus of Oura's business plan. *See* RX-0026 (presentation titled "2023 Press Momentum"); CX-0042C (

Id.

But much of Oura's marketing focus has little to do with the technology claimed in the '178 Patent. For example, Oura's 2023 PR goals were to *Id.* at 214. Both of these selling points have to do with the features of Oura's mobile application—not the hardware of the Oura Ring. Specifically, Oura wanted to highlight the "New Features" added to the Oura Ring in 2023 in the press which were ; "Circles" is a social media type platform for sharing sleep data; "Cycle Insights" tracks women's ovulation cycles; and stress tracks the user's stress levels. None of these features is embodied by or relevant to the claims of the '178 Patent. Rather, these features are selling points related to the mobile application that analyzes the data acquired from the ring's hardware. And the aggressive marketing strategy and painting the Oura Ring as an "experience" due to the above and similar features is what contributes to any alleged commercial success by Oura.

Complainants tout unclaimed features of the Oura Ring as separating Oura from its competitors (i.e., Oura's mobile application). *See* RX-0036 at 213 (stating "what sets Oura apart" as "data, research, and accuracy.") Oura chooses to aggressively market the features outside of the smart ring hardware because that is what sells as an "experience"—not the smart ring hardware itself—which Motiv failed to realize.

Indeed, many of the documents cited by Complainants as support for alleged commercial success cite features unrelated to the claims of the '178 Patent—parroting Oura's marketing points and emphasizing Oura's marketing potential. *See* RX-0331 *citing* CX-0587 (an investor likes how Oura empowers consumers with "personalized data that provides actionable insights for health improvement"); CX-0588 (investor focuses on personalized health data, daily guidance provided by Oura, and women's reproductive health); RX-0040 (Investor invested because Oura Rings "[t]racked data and application allow[s] users to better align their circadian rhythm. Learn their sleeping and overall wellness habits, and thereby improve overall health" and because "75% of active users check[] the Oura app within the first hour of waking"); CX-0586 (investors liked Oura because of their "data driven insights").

And effects of Oura's selling strategy—marketing the Oura Ring's application as a one stop shop for a user's long-term health—is also evidenced by the reception and praise Oura asserts. Any alleged praise from others, like Oura's marketing, is focused on features of the application—personalized data and insights—not the ring hardware. *See* CX-0612; CX-0636; CX-0617; CX-0623; CX-0624; CX-0628; CX-0629. And many of the alleged awards Oura received were due to Oura's "proactive awards program." *See* RX-0036 at 209 ( ).

Even Oura's declaration that it submitted with the complaint by its corporate representative highlights that Oura is engaged primarily in efforts

[redacted] Notably absent from Mr. Chapp's declaration are any references to developments about the ring hardware.

And as discussed above, Motiv previously brought to market a product using technology claimed in the '178 Patent that was, by any objective measure, a failure and not commercially successful or praised. *See* RX-0411C at ¶¶ 450-454 (providing no citations to industry praise for the Motiv ring). Thus, Mr. Alarcon will testify that any commercial success and alleged praise of the Oura Ring is attributable to Oura's aggressive marketing highlighting features outside of what is claimed in the '178 Patent—evidenced by the alleged success and purported praise by others parroting Oura's marketing points that have little to do with the technology claimed in the '178 Patent.

Complainants' economic expert (Ms. Mulhern) provided a rebuttal expert report regarding alleged commercial success. *See* Mulhern Rebuttal. Ms. Mulhern correctly summarized Mr. Alarcon's reasons why he believes there is no nexus between the commercial success of the Oura Ring and the '178 Patent: "1) any success of the Oura Ring is due to Oura's substantial marketing efforts, given the previous commercial failure of the patent-practicing Motiv Ring; and 2) the focus of Oura's marketing efforts is on the features of the Oura Application, not the hardware, which, according to Mr. Alarcon is the subject of '178 Patent." Mulhern Rebuttal at ¶ 20. Ms. Mulhern, however, never addressed the effects of Motiv's lack of commercial success in her own commercial success analysis. *See* Mulhern Rebuttal; Mulhern Dep. Tr. at 25:13-22; 26:11-17. She did not dispute or even provide an opinion whether or not Motiv was a commercial success. Mulhern Tr. 25:13-26:17, 33:3-35:1, 36:9-22. The fact that Motiv possessed the patented technology of the

[redacted]

’178 Patent from 2013-2018 and sold less than [redacted] shows that there is no nexus between any alleged commercial success or Oura’s ring and the technology claimed in the ’178 Patent.

Rather, Oura’s success is attributable to factors outside the patent’s claimed technology. *See Pentec, Inc. v. Graphic Controls Corp.*, 776 F.2d 309, 227 USPQ 766 (Fed. Cir. 1985) (commercial success may have been attributable to extensive advertising and position as a market leader before the introduction of the patented product); MPEP § 716.03(b) (“In considering evidence of commercial success, care should be taken to determine that the commercial success alleged is a result of the invention claimed, in a marketplace where the consumer is free to choose on the basis of objective principles, and that such success is not the result of heavy promotion or advertising, shift in advertising, consumption by purchasers normally tied to applicant or assignee, or other business events extraneous to the merits of the claimed invention, etc.”)

Here, Complainants had a unique opportunity to aggressively market the Oura Gen 3 product after it became the de facto market leader because Motiv’s ring commercially failed (that also practiced the ’178 technology). Complainants also had the opportunity to position themselves as the leading device for Covid detection in 2020, which helped it gain substantial publicity through partnerships with major sports leagues such as the NBA. RX-0040 (describing how the Oura Gen 2 “stepped up to address even more urgent needs in the wake of Covid-19” and how Oura partnered with the NBA). Oura became the new gadget to “detect” Covid-19 even though the Gen 2 ring could only detect temperature and heart rate variability—not Spo2. *In re Fielder*, 471 F.2d 690, 176 USPQ 300 (CCPA 1973) (success of invention could be due to recent changes in related technology or consumer demand; here success of claimed voting ballot could be due to the contemporary drive toward greater use of automated data processing techniques).

Ms. Mulhern also improperly downplays Complainants' marketing prowess and opines that Oura has "no excess marketing spend." ¶ 4. In support, she opines that "[f]or new innovations that the marketplace has not seen before, additional effort is needed to both educate the marketplace and build awareness, leading to increased marketing expenses" to explain away Oura's high marketing spend. Mulhern Rebuttal Report at ¶ 27. But, as Ms. Mulhern acknowledges, Mulhern Tr. at 111:12-112:20. And although Ms. Mulhern is correct that Oura launched its Gen 3 product in 2022, its Gen 2 product is Oura's first product to practice the technology of the '178 Patent—not the Gen 3. Chapp Tr. at 52:17-53:15 (

But, even if the Oura Gen 3 product was an entirely new product that needed to be introduced to the world (which it was not, given the Motiv product and the Oura Gen 2 product), Ms. Mulhern cites an article that explains how companies introducing new products "often allocate 20 percent or more of their revenue to marketing." Mulhern Rebuttal at ¶ 27 *citing* CX-0979. This document, however, further undermines Complainants' claims of commercial success. . Second, Ms. Mulhern misrepresents the article she cites. CX-0979. The chart below from that article demonstrates that only 3.2% of companies spend more than 20% of revenue on marketing, and

[redacted]

over 80% spend less than 10% on marketing (with over half spending less than 5% of revenue on marketing).

MARKETING Budget (as percent of revenue):

% of Revenue	% of Companies
No Budget	1.1%
0-2%	28.6%
3-5%	33%
6-10%	21.1%
11-15%	8.6%
16-20%	4.3%
20+%	3.2%

CX-0979.

Ms. Mulhern also explains that sales and marketing expenses ranged [redacted]. Mulhern Rebuttal at ¶ 28. But Ms. Mulhern's data is misleading at best. The only company to spend over 14% of revenue on marketing from Ms. Mulhern's exhibit is Hugo Boss AG – which spent *37.9%* on marketing.

	Company	Total Sales & Marketing Expenses	Total Revenue	Total Share of Sales & Marketing Expenses
	[A]	[B]	[C]	[D]
[1]	Amazon.com, Inc.	$107,080	$1,369,493	7.8%
[2]	Alphabet Inc.	$67,566	$746,094	9.1%
[3]	ASUSTeK Computer Inc.	$2,547	$42,558	6.0%
[4]	Hugo Boss AG	$3,990	$10,514	37.9%
[5]	Samsung Electronics Co., Ltd.	$76,755	$547,698	14.0%
[6]	Skechers U.S.A., Inc.	$1,539	$19,352	8.0%
[7]	Xiaomi Corporation	$7,563	$103,446	7.3%
[8]	Minimum	$1,539	$10,514	6.0%
[9]	Median	$7,563	$103,446	8.0%
[10]	Average	$38,148	$405,593	12.9%
[11]	Maximum	$107,080	$1,369,493	37.9%

Mulhern Rebuttal at Rebuttal Exhibit 7.

Further, Complainants' invalidity expert (Dr. Rosing) provides no evidence of any industry praise tied to the Motiv ring. RX-0411C at ¶¶ 450-454. The Motiv ring was the first product released that practiced the technology of the '178 Patent in 2017. RX-0238. Then Oura released its Gen 2 ring in 2018—its first product to practice the '178 Patent technology—which also looked strikingly similar to the Motiv ring. *Id.* Despite these two rings using the '178 Patent's technology from 2017-2020, however, Dr. Rosing only cites three internet awards prior to 2020. RX-0411C at ¶¶ 450-454. The lack of industry praise for these products for years after their release demonstrates that there is no nexus between the alleged, subsequent praise Complainants rely upon and the '178 Patent technology. Thus, the bulk of the praise cited by Dr. Rosing is, instead, attributable to external factors outside of the claimed inventions in the '178 Patent—namely, Oura ramping up its marketing spend starting in 2021 and 2022. *See* CX-0042C ( ).

Lastly, both Dr. Rosing and Ms. Mulhern also failed to account for the negative customer reviews and critiques of the Oura Ring in their analysis. *See* RX-0387, RX-0388, and RX-0289. For example, Ms. Mulhern was not aware of Mulhern Tr. 78:79:22; RX-0387. She further failed to consider that a majority of customers reviewing the Oura product gave it a one-star review. Mulhern Tr. 74:22-78:7; RX-0388. Ms. Mulhern also acknowledged that customers can purchase and use the Oura Ring without paying for a subscription. Mulhern Tr. 59:9-21, 62:20-64:13; RX-0386. She did not, however, consider the fact that, as of March 2024,

[redacted]

[redacted] Mulhern Tr. 49:19-51:1, 53:14-22; Mulhern Rebuttal at Rebuttal Exhibits 5, 6. Finally, Ms. Mulhern failed to consider negative press coverage of the Oura product calling it a "missed opportunity," and "too flawed to recommend." Mulhern Tr. 80:20-82:6; RX-0389.

2. The alleged unexpected results asserted by Complainants were predictable.

Oura asserts that the following constitute unexpected results: (1) Oura's ring design would work despite the proximity of components within the same housing; and (2) a POSA would not expect that a ring would be as accurate as wrist-worn technology.

As explained above, the prior art disclosed circumferential ring designs with electrical components contained within ring housings, and thus, the results of Oura's ring were not unexpected.

Furthermore, a POSA would not have understood that wrist-worn devices were the only wearable devices that could provide a high-degree of accuracy of pulse rate and blood oxygenation. Indeed, the '178 Patent itself concedes that "it is recognized in the present disclosure that conventional wearable fitness monitors such as clip-on devices, wristbands, or watch-type monitors still often suffer from inaccuracy mainly because they lack constant and consistent ways to read from the body areas they aim to monitor." '178 Patent at 9:28-33. And Asada (filed 16 years before the '178 Patent's priority date) discloses that "[i]n a preferred embodiment, ring 10 is placed on the middle finger, which is not only convenient for wearing the ring but also suitable for counting pulse. The outer skin of the middle finger is thin, particularly at the sides of the finger, and a digital artery runs right beneath the thin skin." RX-0010 at 3:37-42 (emphasis added). Thus,

the results of a finger wearable device providing accurate sensor readings was not only expected but also well-known in the art (for 16 years).

3. No Evidence of Copying

Complainants assert that "[a]ll Respondents in this investigation have copied Oura's patents." Complainants allege that Respondents copied Oura because (1) Ultrahuman's and RingConn's corporate representatives "have admitted they had access to Oura rings during development of their own smart wearable ring products"; and (2) "there are substantial similarities" between Ultrahuman and RingConn's rings and Oura's. CX-0043C.

These allegations are not true. Mr. Alarcon will testify that each Respondent did not copy Oura's patents or rings for the reasons below:

(a) RingConn Independently Developed

Complainants cite that one of RingConn's corporate representatives, Wu Hao, testified that RingConn "had access" to the Oura Ring during the development of RingConn's products. RX-0331. CX-0843. . *See* RX-0219, RX-0220, RX-0221, RX-0222. Hao Tr. at 89:17-90:15.

Wang Min, another RingConn corporate representative who is responsible for the development of RingConn's hardware,

15:7-13; 17:10-13. *Id.* at 15:19-16:5. *Id.* at 15:7-13. Hao Tr. at 90:16-91:6.

. RX-0056; RX-0057; RX-0058; RX-0059.

Dr. Sarrafzadeh opines that ." But Dr. Sarrafzadeh ignores Wang Min's testimony Wang Min Tr. at 12:4-7. Dr. Sarrafzadeh also

Dr. Sarrafzadeh also states that "" – but neither

Complainants nor Dr. Sarrafzadeh have offered any corroborating evidence for this assertion, and as explained herein, it contradicts the evidence (including the testimony of RingConn's employees).

Furthermore, RingConn's corporate representatives also testified Hao Tr. at 73:3-19; 93:20-94:4. When asked specifically about the differences between Oura and RingConn's rings, Hao said that *Id.* at 91:22-92:5. . *Id.*, *see also* RX-0049 (below):

[redacted]

How We Fare

	RingConn Gen 2	O brand	S brand
Price	Super Early Bird **$209** ~~$299~~	$299-349	$399
Battery Life	10-12days	5-7days	6-7days
Thickness	2mm	2.5-3mm	2.6mm
Width	6.8mm	7.9-9mm	7mm
Weight	2-3g	4-6g	2.3-3g
Water Resistance	IP68	IP68	IP68
System Support	Android & iOS	Android & iOS	Android
Sleep Apnea Monitoring	✓	×	×
Sleep Time Customization	✓	×	×
Portable Charing Case	✓	×	✓
No Subscription Fee	✓	×	✓

RX-0049.

In sum, the RingConn Accused Product looks, feels, and acts differently than the Oura Ring – it is not a "copy."

[redacted]

(b) Ultrahuman Independently Developed

[redacted] *See* Kumar Transcript at 16:22-17:20; 19:12-10; *see also* https://economictimes.indiatimes.com/tech/startups/healthtech-startup-ultrahuman-acquires-wearables-firm-lazyco/articleshow/90797821.cms?from=mdr. [redacted]. *See* Kumar Transcript at 21:21-22:10.

[redacted]. *See* Kumar Transcript at 32:17-34:19; 21:21-22:10. [redacted] *See* Kumar Transcript at 34:20-35:5. In fact, Mr. Kumar testified that [redacted]. *See* Kumar Transcript at 120:14-121:20. [redacted].

4. Long-felt but unmet need

There was no long-felt but unmet need because the finger-worn wearable device was already disclosed in the prior art as explained throughout Section VII herein. Furthermore, as

[redacted]

explained above, the Motiv Ring—which embodied the technology claimed in the '178 Patent—failed to sell. Indeed, the lack of any need (let alone an unmet need) led to the ultimate demise of Motiv Inc., as demand was insufficient to keep the company—that had developed a ring incorporating the claimed features of the '178 patent—in business. *See* M. Strasser Tr. at 76:8-22 (testifying that Motiv sold less than [redacted]).

Dr. Rosing opines that "there was a long-felt and unresolved need for a compact health tracker in ring form that encapsulated all components." RX-0411C at ¶ 441. This is incorrect. First, Dr. Rosing cites the "MIT Ring Papers" to support the notion that "there was thus a need for a smart wearable that was more comfortable than prior wearables, and could be worn around the clock." *Id.* at ¶ 442. But not once does Dr. Rosing point to any citations that the authors of the MIT papers themselves identified this problem. *Id.* In fact, the "MIT Ring Papers" appear to provide *solutions* for a smart ring device that that permitted 24-hour monitoring of health conditions, including PPG signals. *Id.* Dr. Rosing is correct that the protypes throughout the MIT Ring Papers place the battery and other components outside of the ring housing, but the authors did not identify a need to put the battery or other components within the ring housing. Dr. Rosing appears to have identified this alleged problem herself, and she has pointed to no objective evidence that those in the art identified such a problem prior to November 2013.

Nonetheless, as explained above, Niwa undisputably discloses a smart wearable ring that contains all of its components within a circumferential ring housing. And Niwa throughout its disclosure emphasizes how its embodiments reduce the consciousness of the [user] (i.e., not let the [user] have an uncomfortable feeling)." *See, e.g.,* Niwa at [0206]

Dr. Rosing also argues that "there was also a need for more comfortable fitness trackers," "there were also needs for wearables that was fashionable and attractive," and "there were needs

[redacted]

for such devices to have extended battery life that could last beyond 24 hours without charging." RX-0411C at ¶¶ 443, 444, 445, and 446. Again, however, Dr. Rosing provides no evidence prior to 2014 to support any of these apparent long-felt but unmet needs. *Id.* And in *Procter & Gamble Co. v. Teva Pharm. USA, Inc.,* the Federal Circuit noted that "we look to the filing date of the challenged invention to assess the presence of a long-felt and unmet need." 566 F.3d 989 at 998 (Fed. Cir. 2009). *See also* RX-0331 at 12. The effective filing date of the '178 Patent is November 29, 2013. Thus, any purported evidence of any alleged unmet after November 29, 2013 is irrelevant.

5. Failure of others

The finger-worn wearable device claimed in the '178 Patent was already disclosed in the prior art. Thus, others were successful in creating the inventions claimed in the '178 Patent.

Dr. Rosing argues that "As of 2013, there were numerous challenges in making wearable devices that includes sensors, circuits, and a battery. And there were also several challenges that to making a finger-worn ring device." RX-0411C at ¶ 455.

But Niwa discloses a device that houses internal electronic components and circuitry within a finger-worn device. Niwa also acquires and transmits data. Dr. Rosing instead argues that Niwa had too many components stacked on the top of the finger, and, therefore, is evidence of others trying and failing to make a "compact form factor." RX-0411C at ¶ 455-456. The claimed invention has little to do with how compact the ring is. The '178 Patent claims having a finger-worn ring that houses various components. Niwa discloses this. The size and shape of Niwa is irrelevant to whether others tried and failed to make the inventions claimed in the '178 Patent.

VIII. COMPLAINANTS FAIL TO SATISFY ECONOMIC PRONG OF DOMESTIC INDUSTRY WITH RESPECT TO THE '178 PATENT

"In order to prove a violation of section 337 in a patent-based investigation, a complainant must prove by a preponderance of the evidence that a domestic industry in the United States exists or is in the process of being established." *Certain Multimedia Display and Navigation Devices and Sys. Components Thereof and Prods. Containing Same*, Inv. No. 337-TA-694, Corr. Comm'n Op. at 5 (Aug. 8, 2011). To do so, Complainants must adduce sufficient proof that their industry comprises, with respect to articles protected by the '178 patent: "(A) significant investment in plant and equipment; (B) significant employment of labor or capital; or (C) substantial investment in its exploitation, including engineering, research and development, or licensing." 19 U.S.C. § 1337(a)(3). It is "incumbent upon the complainant to specifically prove that the separate requirements and standards of each prong have been met based on the specific evidence relied upon for that statutory provision." *Certain Road Milling Machines and Component Thereof*, Inv. No. 337-TA-1067, Order No. 16 at 5 (Jan. 12, 2018) (citation omitted).

Complainants must also prove that the investments are significant or substantial. 19 U.S.C. § 1337(a)(3). Whether the investments are "significant" or "substantial" is not evaluated according to any rigid mathematical formula. *See Certain Printing and Imaging Devices and Components Thereof*, Inv. No. 337-TA-690, Comm'n Op., 2011 WL 1303160, at *15 (Feb. 17, 2011). Instead, the analysis examines "the facts in each investigation, the article of commerce, and the realities of the market," taking into consideration "the industry in question, and the complainant's relative size." *Id*. (citations omitted). In assessing significance, the Commission has examined "the value added to the article in the United States by the domestic activities," and "the relative domestic contribution to the protected article by comparing complainant's product-related domestic activities to its product-related foreign activities." *Id*. at *15 (citations omitted). The Commission

also compares investments to sales of the protected article to consider the context of a complainant's domestic industry investments. *See In the Matter of Certain Carburetors and Products Containing Such Carburetors*, Inv. No. 337-TA-1123, Comm'n Op. at 9 (Oct. 28, 2019). The "complainant must present quantitative data to support its DI claims, as an analysis of the 'qualitative factors alone [is] insufficient to show'" the significance or substantiality of its activities. *Certain Road Milling Machines*, Order No. 16 at 6 (citing *Lelo Inc. v. Int'l Trade Comm'n*, 786 F.3d 879, 884-85 (Fed. Cir. 2015)); *see also Certain Solid State Storage Drives, Stack Electronics Components, and Products Containing Same*, Inv. No. 337-TA-1097, Comm'n Op., 2018 WL 4300500 at *21 (June 29, 2018) (no DI where Complainant failed to demonstrate its domestic activities added value to its DI products, "or otherwise demonstrated that these figures were quantitatively significant or substantial").

A. Overview

Complainants fail to meet their burden to show a protectable economic domestic industry. Complainants are based in Finland, all of their products are manufactured in Finland and Estonia, Mulhern Tr. 143:13-152:12, 174:2-175:1; RX-0390; RX-0391. The majority of Complainants' research and development on the Domestic Industry Product also took place either prior to the investments relied upon by Complainants, or outside of the United States. For example, regardless of where it took place, the design and development of the Gen3 product was complete at least as of its November 2021 release, and the Oura Gen4 product was designed and developed in Finland. RX-0390; RX-391; Mulhern Tr. 143:4-144:21. These facts and context make proving economic domestic industry difficult. *Certain Electronic Candle Products And Components Thereof*, Inv. No. 337-TA-1195, Comm'n Op. at 39-40 (Oct. 4, 2022).

Complainants' expert, Carla Mulhern, offers opinions that there is an economic domestic industry under Sections (A) and (B) of the statute, she does not opine that the requirements of Section C are met. Mulhern Tr. 155:19-157:3 ("I think it is fair to say that my economic opinions pertain to subsections A and B only."); RX-0412C, Mulhern Rep. (Sept. 9, 2024), ¶59. For both Sections, she focused on what she claimed to be "the R&D and technical support activities relevant to the DI Product," and she did not perform any additional allocations to the DI Product, because "all of the company's investments are in support of the DI Product." RX-0412C, Mulhern Rep. (Sept. 9, 2024), ¶60. But her vague and conclusory identification of such investments is insufficient. A closer look at Ms. Mulhern's analysis reveals that her opinions are legally and factually flawed, and Complainants have not met their burden to show they are more than a mere importer of the patented products to the U.S.

B. Complainants Fail To Tie The Alleged Domestic Industry To Articles Protected By The '178 Patent.

Sections 337(a)(3)(A) and (B) require that the domestic industry relate to "the articles protected by the patent." 19 U.S.C. § 1337(a)(3); *Certain Replacement Automotive Lamps*, Inv. No. 337-TA-1291, Comm'n Op., 2024 WL 1298906 at *6 (March 7, 2024). Complainants have failed to show that the alleged economic domestic industry is linked to the patented product. Another entity, Motiv, originally filed the patent application that ultimately led to the '178 Patent. JX-0001; Mulhern Tr. 21:2-20. The '178 Patent did not issue until January, 9, 2024 (JX-0001), and Complainants did not acquire the rights in the patent portfolio until the middle of 2023. Mulhern Tr. 97:6-102:17; RX-0238; CX-0895. Ms. Mulhern did not take into account who performed the research and development leading to the applications that led to the '178 patent. Mulhern Tr., 22:20-23:3. She also has not separated out Complainants' purported investments from before they acquired the patent portfolio, or before the '178 Patent issued. Mulhern Tr. 97:6-

[redacted]

102:17. The time period she used when identifying Oura's alleged investments relating to research and development and technical support was October 2021 through March 2024. Mulhern Tr. 137:10-17. Thus, Ms. Mulhern's opinions rely on investments that occurred prior to the issuance of the '178 patent, and she did not attempt to isolate investments occurring after the patent issued. Mulhern Tr. 157:9-158:19. Even if such investments could be considered, which is an open question of law, Ms. Mulhern fails to sufficiently explain how the investments predating the patent could pertain to patented product.

In addition to including investments prior to the issuance of the '178 patent, Ms. Mulhern's opinions also include investments related to products that are not covered by that patent. Complainants claim that only the third and fourth generation Oura Ring products are covered by the '178 patent and constitute the Domestic Industry Product. RX-0412C, Mulhern Rep. (Sept. 9, 2024), ¶28. The first-generation Oura Ring debuted in 2015, and the second-generation came out in 2018. Chapp Tr. at 49:6-24, 50:20-23, 54:20-56:16; Mulhern Tr. 109:12-110:7. The Oura Gen2 is still supported and sold today. Mulhern Tr. 121:3-5. The Oura Gen3 launched in November of 2021, two years before Complainants acquired the patent portfolio from Proxy. Chapp Tr. 54:20-55:4, 169:18-170:4. According to Mr. Chapp, [redacted] Chapp Tr. 55:23-56:16. So the design of the hardware for the Gen3 was completed by at latest November 2021 when it was released, before Complainants purchased the patents and only one month into the time period of investments used by Ms. Mulhern. *See* Chapp Tr. 169:18-170:4. Complainants then designed the Oura Gen4 in Finland—not the U.S.—and "could not have made a product like the Oura Ring [Gen4] anywhere else." RX-0390; RX-391; Mulhern Tr. 143:4-144:21.

Ms. Mulhern had never used any Oura Ring or application and did not do a comparison of the features that are available for each generation, or which features required paying for an Oura membership, nor did she confirm to which features her alleged investments related. Mulhern Tr. 59:22-60:13. Ms. Mulhern did not separately analyze the R&D investment between the generations, and she did not explain how the investments she identified in the U.S. from October 2021 March 2024 specifically related to the design and development of either the Gen3 or Gen4 product. Mulhern Tr. 119:7-120:20; 137:10-138:10. She also did not carveout technical support investments during that time relating to ongoing support of the Oura Gen2 product. Mulhern Tr. 120:21-121:19. Thus, Complainants have not shown that the domestic industry relates to "the articles protected by the patent." 19 U.S.C. § 1337(a)(3)(A) and (B). They also fail to meet their burden on the other statutory requirements.

1. Complainants' Fail To Show Significant Investment In Plant And Equipment.

Complainants rely on two facilities located in the U.S. (one in San Diego and one in San Francisco) totaling [redacted] square feet. Mulhern Tr. 173:3-14. Neither of those facilities manufactures any component of the Domestic Industry Product. Ms. Mulhern never set foot in either facility, nor did she obtain or review any photographs of those facilities. Mulhern Tr. 173:10-11. Ms. Mulhern did not conduct any comparison of Complainants' facilities in the United States to its facilities abroad, including the headquarters in Finland. Mulhern Tr. 173:15-174:1. She did not even ask for data regarding the size of the facilities outside the U.S. or how much Complainants invest in having two third-party manufacturers (one in Finland and one in Estonia) manufacture the Oura Ring products. Mulhern Tr. 174:12-175:1.

Instead, Ms. Mulhern estimated the share of plant investments at the two U.S. locations based on a "headcount allocation" of the number of individuals at those locations "engaged in DI

activities," namely R&D and technical support, relative to the total headcount at each location. RX-0412C, Mulhern Rep. (Sept. 9, 2024), ¶¶72-75. In order to obtain the number of employees working on R&D and technical support, Ms. Mulhern relied on Mr. Chapp's identification of various departments preforming those functions, resulting in a total of in allocated plant investments. *Id.*, ¶¶60-69. However, Ms. Mulhern's analysis lacks sufficient factual support. For example, Complainants' have not shown that of individuals at its San Diego facility are dedicated to the research and development of the domestic industry products. RX-0412C, Mulhern Rep. (Sept. 9, 2024), n.259 (citing Chapp Decl). Complainants also acknowledge that "many of Oura's employees are fully remote, and do not work from a particular facility," which calls Ms. Mulhern's headcount methodology for the two U.S. facilities into question. *See* RX-0412C, Mulhern Rep. (Sept. 9, 2024), n.259 (citing Chapp Decl.). Ms. Mulhern also identified in equipment expenses purportedly associated with research and development and technical support. *Id.*, ¶¶76-79. She did not perform any further allocation of those investments to the Domestic Industry Product, based on her understanding that all efforts of Oura employees are directed towards research, development, manufacturing, support, sales, marketing, and service of the Oura Ring and the functionalities provided within the Oura application. *Id.*, ¶¶60-69.

While Ms. Mulhern lists various dollar values of alleged U.S. plant and equipment expenditures, she fails to provide sufficient context for those numbers. "Qualitative factors cannot compensate for quantitative data that indicate insignificant investment and employment under the domestic industry requirement." *Lelo Inc. v. Int'l Trade Comm'n*, 286 F.3d 879, 885 (Fed. Cir. 2015). Rather than reviewing purely qualitative numbers, the Commission compares such investments to sales of the protected article to consider the context of a complainant's domestic industry investments. *See In the Matter of Certain Carburetors and Products Containing Such*

Carburetors, Inv. No. 337-TA-1123, Comm'n Op. at 9 (Oct. 28, 2019). Ms. Mulhern identifies total plant and equipment investments of , which she concedes is only of Complainants' worldwide R&D plant and equipment investments. RX-0412C, Mulhern Rep. (Sept. 9, 2024), ¶100. But she fails to account for how those investments fit into the context of Complainants' business as a whole. For example, during the same period of time, Complainants generated in revenue for sales of Oura Rings. Mulhern Tr. 178:15-179:8. Thus, Complainants alleged domestic expenditures are less than of their revenue. That can hardly be considered "significant."

2. Complainants' Fail To Show Substantial Employment Of Labor and Capital.

Complainants' alleged investments in labor in the U.S. similarly lack substantiality in the context of Complainants' overall business. Ms. Mulhern tallies up the salary and benefits associated with U.S. personnel in departments identified by Mr. Chapp as engaging in research and development and technical support activities, resulting in in allocated labor costs. RX-0412C, Mulhern Rep. (Sept. 9, 2024), ¶¶81-83. But Ms. Mulhern improperly lumps all such research and development expenditures together, and does not specify expenditures for any particular project or development that allegedly relates to the patented invention or any added features. Mulhern Tr. 175:11-176:5. She based her entire opinion regarding the relevant employees performing research and development or technical support activities on a single conversation with Mr. Chapp one business day before her report was due, and she could not explain in any detail which tasks each department performed or how those tasks allegedly related to the Domestic Industry Product. Mulhern Tr. 161:3-168:12. For example, Ms. Mulhern improperly included employees who work on software features, rather than the ring hardware, and those who work on the Oura website as part of her domestic economic activity. Mulhern Tr. 167:3-171:11.

She also failed to account for the fact that the research and development personnel support both existing and future products. Mulhern Tr. 169:22-170:14. Further, Ms. Mulhern concedes that of Complainants' research and development employees are based in the U.S., and the majority of Complainants' worldwide research and development salary amount is paid to employees outside the U.S. RX-0412C, Mulhern Rep. (Sept. 9, 2024), ¶¶101-102.

Ms. Mulhern's alleged capital investments of associated with third party research studies are also unsupported. RX-0412C, Mulhern Rep. (Sept. 9, 2024), ¶¶84. Complainants have not shown that the various research studies in the areas of sleep, heart health, and reproductive health were related to the Domestic Industry product. Such vague and unsupported assertions fall short of demonstrating "substantial" investment.

IX. PUBLIC INTEREST WOULD BE HARMED BY THE REQUESTED REMEDY

For the below reasons, if the ALJ or Commission determines, as a result of this Investigation, that there is a violation, the ALJ and/or Commission should determine that Respondents should not be prevented from importing any of the accused products into the United States because of the following factors, which establish that there is a public interest in the continued importation of the accused products: (1) the public health and welfare, (2) competitive conditions in the United States economy, (3) the production of like or directly competitive articles in the United States, and (4) United States consumers. Each of these factors are discussed in more detail below.

At an absolute minimum, if the ALJ or Commission determines, as a result of this Investigation, that there is a violation, any remedial ordered issued as a result of this Investigation should be tailored to permit Respondents to continue to repair, service, and replace the accused products in the United States to service customers that existed as of the time of issuance of such a remedial order, and to permit research, that was initiated before the time of issuance of such a

[redacted]

remedial order, related to the accused products in the United States to continue and for Respondents to be able to support the same, for example. Otherwise, the ALJ and/or Commission should delay issuance of a remedial order for at least one year to allow existing users/customers of the accused products to switch to another product, and/or to allow ongoing research to continue.

B. ULTRAHUMAN PUBLIC INTEREST

Access to quick, reliable, and consistent health information is now, more than ever, crucial to staying healthy and detecting early signs of illness. Americans continue to face an onslaught of health-related concerns stemming from the COVID-19 pandemic, such as stress, anxiety, and severe sleep deprivation.[13] Although the federal Public Health Emergency for COVID-19 has ended, the ongoing health and welfare of the public remain significant concerns. Institutions and federal agencies, such as the CDC, are currently studying the long-term health effects associated with COVID-19, which can cause chronic conditions requiring intensive and comprehensive care.[14]

To address these serious health and welfare concerns, companies have developed various health-tracking devices, such as smartwatches, to enable individuals to monitor certain biomarkers. However, these traditional wearable devices can be restrictive and burdensome, often leading to inaccurate results. These devices, while useful, often fail to provide the level of comfort and continuous monitoring required for accurate health assessments. The bulky nature of smartwatches can interfere with daily activities and sleep, reducing their effectiveness and user compliance.

In response to these limitations, Ultrahuman developed the Ultrahuman Ring AIR, designed to overcome the shortcomings of traditional wearable devices and provide the public with

---

[13] *See* https://www.aaas.org/news/sleep-deprivation-described-serious-public-health-problem.

[14] *See* https://www.cdc.gov/coronavirus/2019-ncov/long-term-effects/index.html.

a more convenient, comfortable, and reliable mechanism to monitor their health and welfare. The Ultrahuman Ring AIR stands out in the health-monitoring space due to its sleek design, durability, and advanced capabilities.[15] The Ultrahuman Ring AIR accurately measures key health indicators such as sleep, heart rate variability, movement, temperature, and other crucial biomarkers. Unlike many other health-monitoring products, the Ultrahuman Ring AIR not only collects data but also correlates it with real-time insights, making it an invaluable tool for individuals seeking to maintain and improve their health.

1. Public Health and Welfare Implications

Oura has sued its primary competitors, seeking remedial orders that essentially aim to monopolize the smart ring market in the U.S. by prohibiting the importation of substantially all competitor smart rings, including the Ultrahuman Ring AIR. Indeed, the market is nascent but has grown significantly—two years ago smart rings were not available in most retailer locations but now, largely driven by Ultrahuman's efforts, they are available in Walmart, Costco, Verizon stores, and Best Buy, Such exclusionary remedies would adversely impact public health and welfare, competitive conditions in the U.S. economy, the production of competitive products, and U.S. consumers.

Given the benefits of the emerging smart ring market, the exclusion of the Ultrahuman Ring AIR would deprive the public of a reliable and efficient mechanism to monitor their health and detect early signs of illness. This would particularly affect individuals dealing with chronic health conditions exacerbated by the COVID-19 pandemic. Health-tracking devices like the

[15] *See* https://ring.ultrahuman.com/comparison.

Ultrahuman Ring AIR are crucial for monitoring long-term health effects and providing early warnings of potential health issues, allowing for timely intervention and management.

A remedial order banning the importation of alternative wearable smart devices will negatively impact public health and welfare. The accused products include a number of health benefits including monitoring a user's sleep, activity, heart rate, heart rate variability, and stress among others. Public studies have linked the use of smart wearable devices to lower BMI and lower rates of cardiovascular issues.[16]

The Ultrahuman Ring AIR can further be used in conjunction with other products, such as the Ultrahuman M1 Live Glucose Tracking device to provide tailored insights to better help consumers understand their risk for metabolic disease. RX-0447.6. Indeed, Ultrahuman launched this capability in 2020, with Oura chasing the company just to keep up. Four years later, in 2024, Oura acquired Veri to add metabolic health tracking to its platform.

Despite the fact that the Ultrahuman Ring AIR is not classified as a medical device, it is not the case that only medical devices raise health and welfare issues.

An exclusion order would also negatively impact ongoing and planned research in the health and wellness space, particularly studies related to metabolic health and personalized patient care. . Mr. Kumar testified

[16] *See, e.g.,* https://www.ncbi.nlm.nih.gov/pmc/articles/PMC9034426/; https://www.ncbi.nlm.nih.gov/pmc/articles/PMC7093773/; https://www.sciencedirect.com/science/article/abs/pii/S0020748921003084; https://www.researchgate.net/publication/333479278.

[redacted] JX-0011C.0023 at 87:22-88:9. He also testified about a [redacted]." JX-0011C.0025 at 96:23-97:8. An exclusion order would hinder the collection of valuable data from these studies, potentially delaying or preventing groundbreaking medical knowledge that could benefit public health, and could prevent other studies from ever being conducted in the first place.

Ultrahuman is also in discussions [redacted] Exclusion of the Ultrahuman Ring AIR would harm public health and welfare by denying the public potentially groundbreaking medical knowledge acquired from these studies. The comprehensive data collected by the Ultrahuman Ring AIR could lead to new insights into the management and treatment of various health conditions, further emphasizing the need for these devices to remain available in the market.

Ultrahuman [redacted]. JX-0011C.0025 at 96:23-97:8. As will be explained during the Hearing, [redacted]

[redacted]. An exclusion order here would significantly disrupt these efforts.

Ultrahuman is committed to providing improved health and wellness to its customers and members of the public. Nurse stress and burnout is a leading concern in healthcare systems in the United States, and Ultrahuman has started an initiative to tackle this issue. And just recently, it sponsored the Power Up Nursing Symposium in October 2024. Power Up Nursing is a movement aimed at empowering nurses by providing them support, community, leadership opportunities, and ways to prevent burnout.[17] Ultrahuman is also working with Jackson Health, a nonprofit academic teaching health system, and one of the nation's largest public healthcare networks, to offer Ultrahuman products to nurses at a discount and with financing.

Ultrahuman has also worked to improve access to its key products—the Ring Air and the M1—by integrating into payors in the healthcare system. Both the Ring Air and the M1 are certified by SIGIS (Special Interest Group for IIAS Standards), which makes them eligible for FSA/HSA cards. This allows millions of Americans to access these solutions with no out-of-pocket expenses.

In addition to its rings and the M1 glucose monitor, Ultrahuman also offers a service called Blood Vision, "a radical new way to understand and interpret your blood markers" include dozens of parameters related to heart health, fatigue, hair loss, disease risk, hormone imbalances, and more.[18]

---

[17] https://www.powerupnursing.com/
[18] https://www.ultrahuman.com/blood-vision/tests/

Blood Vision will soon launch in the United States with a US partner which is a leader in preventive health testing.

2. Competitive and Economic Considerations

The requested remedial order(s) would create an overly expansive monopoly in the smart ring space to the detriment of consumers. Competition drives companies to reduce product prices, increase product quality, and invest in further technological research. Without competition, companies lose the incentive to innovate and provide affordable, reliable health and wellness information. In addition to Oura adding metabolic tracking nearly four years after Ultrahuman added that capability to its platform, Oura's Gen 4 ring launched without the inner bumps in an attempt to match the comfort of Ultrahuman's Ring Air. As yet another example, Ultrahuman launched pregnancy insights on the Ring Air in December 2023,[19] with Oura again trying to keep pace, debuting that capability in March 2024.[20] The exclusion of Ultrahuman from the market would discourage other companies from entering the market, further stifling innovation and competition.

The application corresponding to the Ultrahuman Ring AIR can be used without subscription fees, giving consumers unlimited access to their data immediately after purchasing the ring. In contrast, a subscription is required in order to take advantage of the full capability of Oura's rings. Excluding Ultrahuman's rings from the market would deprive consumers of the ability to purchase a product that best aligns with their financial and medical needs. Further, unlike

[19] https://blog.ultrahuman.com/blog/ultrahuman-introduces-groundbreakingpregnancy-insights-on-the-ring-air/
[20]https://ouraring.com/blog/ourapregnancy-insights-feature/

many other consumer wearable devices, the Ultrahuman Ring AIR has the unique capability of collecting and correlating multiple data streams to provide comprehensive health insights.

Oura has demonstrated a policy of litigating its patents against other companies developing and selling smart rings. Oura has filed suit multiple district court proceedings and this investigation against at least RingConn, Ultrahuman, and Circular. On the day that Samsung announced its Galaxy ring, Oura's CEO stated it had the "strongest IP portfolio – in both hardware and software – for the smart ring form factor."[21] Oura's CEO also stated that it would "take the action that's appropriate," after determining whether Oura could assert its patents against Samsung.[22] When Oura filed its complaint in this investigation, Oura stated it would "always protect" its "countless hours of design, scientific research, and engineering into our hardware, software, and algorithms."[23] Due to these statements, Oura will likely continue to assert its IP against other corporations that sell smart rings.

Oura is trying to eliminate any competition for their products through this investigation and its public statements regarding litigating its patents. Banning importation of competing products will have a chilling effect on innovation in the wearable smart device space. For example, many customers have already given Oura's products extremely negative reviews, namely it "felt cheap" for the price, has limited sizing choices, it "hurts," it is a limited health tracker, it is inaccurate, and is otherwise an "over-priced hack."[24] And as described further below, Oura has

---

[21] https://techcrunch.com/2024/01/17/samsung-is-taking-on-oura-with-the-galaxy-ring/.
[22] https://www.youtube.com/watch?v=IX0A1LTgdNE.
[23] https://ouraring.com/blog/oura-files-itc-action-for-patent-infringement/.
[24] *See* https://medium.com/biohacker/after-using-the-oura-ring-for-3-months-i-sold-it-b4b303d4e2f8; https://www.digitaltrends.com/mobile/i-want-to-love-the-oura-ring-but-i-cant/; "Oura Ring is LYING to You: Here Are The Facts" (https://www.youtube.com/watch?v=6byBtAmyITc).

been unable to meet demand—excluding Ultrahuman from the market will only ensure that consumers that desire smart rings will either be unable to get them or will have to pay more money.

3. Lack of Reasonable Alternatives

Oura fails to identify reasonable alternatives to the Ultrahuman Ring AIR. Traditional health-monitoring devices like smartwatches are often cumbersome and uncomfortable, leading to disrupted and inaccurate readings, especially during sleep monitoring. Further, the Ultrahuman Ring AIR offers a unique capability of collecting and correlating multiple data streams, providing more accurate and reliable health insights. The exclusion of the Ultrahuman Ring AIR would therefore deprive consumers of a superior health-monitoring solution that aligns with their financial and medical needs.

Oura's assertion that there are reasonable substitutes for the Ultrahuman Ring AIR lacks substantiation. The reliability and accuracy of data collected from a smart ring is not necessarily comparable to data collected from other devices, and Oura has not demonstrated that any device is a reasonable substitute.[25] Additionally, Oura has failed to show that it or other companies have the capacity to replace the volume of articles sold by Ultrahuman in a commercially reasonable time. Ultrahuman has recently been made available in large retailers such as Walmart, Sam's Club, Verizon and Costco to provide access to American consumers.

[25] *See, e.g.,* https://ouraring.com/ ("Your finger provides the most accurate reading of over 20 biometrics that directly impact how you feel.").

Removal of the Ultrahuman Accused Products would remove options that are just as or more accurate than the Oura ring and that provide a better option to consumers because it is less expensive and without a monthly subscription. *See* RX-0329C.16-19 (ROG No. 8).)

As of at least March 2024, Oura was unable to meet demand for its own product, despite allegedly having significant quantities of inventory.[26] As described further below, these issues have extended through at least October 2024. Thus, Oura does not have the manufacturing capacity to fulfill its own orders, let alone fulfill its own orders and replace the volume of accused products from RingConn, Circular, and Ultrahuman that are potentially subject to an exclusion order.

Again, decreasing the availability of wearable smart devices with fitness and vital sign tracking will have a negative impact on public health, as wearable smart devices include a number of human health benefits, as just one example, a wearable smart device is correlated to lower BMI and lower rates of cardiovascular issues.[27]

4. <u>Specific Examples of Public Interest Harm</u>

a. Ongoing Medical Studies:

---

[26] *See, e.g.,* https://sleepopolis.com/news/oura-ring-shipping-delays/.

[27] *See e.g.,* https://www.ncbi.nlm.nih.gov/pmc/articles/PMC9034426/; https://www.ncbi.nlm.nih.gov/pmc/articles/PMC7093773/; https://www.sciencedirect.com/science/article/abs/pii/S0020748921003084; https://www.researchgate.net/publication/333479278.

[redacted]

Exclusion of the Ultrahuman Ring AIR would disrupt ongoing medical studies that rely on its unique data collection capabilities. For example, Ultrahuman is conducting a pilot study with Within Health to help patients with eating disorders by providing continuous monitoring and personalized insights.[28] Interrupting this study could delay the development of new treatment protocols and negatively impact patient outcomes.

b. Partnerships with Research Institutions

Ultrahuman is working with renowned institutions [redacted]. JX-0011C.0025 at 96:23-97:8. As will be explained during the Hearing, [redacted]. An exclusion order here would significantly disrupt these efforts.

---

[28] *See* https://blog.ultrahuman.com/blog/exploring-the-role-of-wearables-in-intensive-outpatient-monitoring-for-eating-disorders/. (JX-0011C.0023 at 87:22-88:9.)

[redacted]

c. Expansion of Health-Tracking Technology

Ultrahuman has plans [redacted]. This includes [redacted] An exclusion order would stall these advancements, depriving the public of innovative health-monitoring tools that could significantly improve their well-being.

5. <u>Exemptions, Delays</u>

The Commission should exempt service, repair, and replacement of the accused products to enable consumers to continue benefiting from their health-monitoring devices. If a remedial order does issue in this case, Ultrahuman should be able to continue to service, repair, and replace existing Ultrahuman products in the United States.

The public interest in allowing continued service, repair, and replacement of existing Ultrahuman Ring AIR devices is significant. These devices provide continuous monitoring and health insights that are crucial for managing chronic conditions and overall well-being. Disrupting access to these services would not only impact individual users but also the broader healthcare community that relies on the data for research and treatment advancements.

The Commission should also provide an exemption to facilitate the ongoing research, which will benefit the public health significantly.

Otherwise, the Commission should delay issuance of a remedial order for up to one year to allow users of the accused products to switch to another product. Without a delay, existing Ultrahuman customers may experience disruptions in their health-monitoring, which can negatively affect their health.

[redacted]

6. Conclusion

In light of these considerations, the requested remedial orders are against the public interest. They would deprive the public of a reliable and efficient mechanism to monitor health, negatively impact ongoing health research, and stifle competition and innovation in the health-monitoring market. Therefore, a remedial order should not issue in this case. Further, at a minimum, if a remedial order does issue in this case, Ultrahuman should be able to continue to service, repair, replace, and continue researching existing Ultrahuman products in the United States. Otherwise, a remedial order should be delayed in order to facilitate customers switching to another product without additional, significant disruptions.

Ultrahuman further incorporates by reference any and all arguments raised in its Public Interest Statement filed on March 27, 2024.

C. RINGCONN PUBLIC INTEREST

Access to quick, reliable, and consistent health information is now, more than ever, crucial to staying healthy and detecting early signs of illness. Americans continue to face an onslaught of health-related concerns stemming from the COVID-19 pandemic, such as stress, anxiety, and severe sleep deprivation.[29] Although the federal Public Health Emergency for COVID-19 has ended, the ongoing health and welfare of the public remain significant concerns. Institutions and federal agencies, such as the CDC, are currently studying the long-term health effects associated with COVID-19, which can cause chronic conditions requiring intensive and comprehensive care[30].

---

[29] *See* https://www.aaas.org/news/sleep-deprivation-described-serious-public-health-problem.

[30] *See* https://www.cdc.gov/coronavirus/2019-ncov/long-term-effects/index.html.

To address these serious health and welfare concerns, companies have developed various health-tracking devices, such as smartwatches, to enable individuals to monitor certain biomarkers. However, these traditional wearable devices can be restrictive and burdensome, often leading to inaccurate results. These devices, while useful, often fail to provide the level of comfort and continuous monitoring required for accurate health assessments. The bulky nature of smartwatches can interfere with daily activities and sleep, reducing their effectiveness and user compliance. They also require constant charging, further interfering with biometric monitoring throughout the night, when people typically charge their smartwatch.

In response to these limitations, RingConn developed the RingConn Smart Ring, designed to overcome the shortcomings of traditional wearable devices and provide the public with a more convenient, comfortable, and reliable mechanism to monitor their health and welfare. The RingConn Smart Ring stands out in the health-monitoring space due to its seven-day battery life, no subscription fee, sleek design, and high accuracy and sensitivity, among others. The RingConn Smart Ring accurately measures key health indicators such as blood oxygen saturation (SpO2), heart rate, HRV, respiratory rate, and skin temperature, along with duration of sleep, movement, sleep efficiency, sleep stability, and other crucial biomarkers.

1. Public Health and Welfare Implications

Oura has sued its primary competitors, seeking remedial orders that essentially aim to monopolize the smart ring market in the U.S. by prohibiting the importation of substantially all competitor smart rings, including the RingConn Smart Ring. Such exclusionary remedies would adversely impact public health and welfare, competitive conditions in the U.S. economy, the production of competitive products, and U.S. consumers.

Patent Owner Oura Ex. 2014, 0466

[redacted]

Given the benefits of the emerging smart ring market, the exclusion of the RingConn Smart Ring would deprive the public of a reliable and efficient mechanism to monitor their health and detect early signs of illness. This would particularly affect individuals dealing with chronic health conditions exacerbated by the COVID-19 pandemic. Health-tracking devices like the RingConn Smart Ring are crucial for monitoring long-term health effects and providing early warnings of potential health issues, allowing for timely intervention and management.

A remedial order banning the importation of alternative wearable smart devices will negatively impact public health and welfare. The accused products include a number of health benefits including monitoring a user's sleep, activity, heart rate, heart rate variability, and stress among others. Public studies have linked the use of smart wearable devices to lower BMI and lower rates of cardiovascular issues.[31]

Despite the fact that the RingConn Smart Ring is not yet classified as an FDA-approved medical device, it is not the case that only medical devices raise health and welfare issues. And RingConn has applied for FDA approval for its pulse oximeter and sleep apnea detection using respiratory rate data[32]. [redacted].[33]

---

[31] *See, e.g.,* https://www.ncbi.nlm.nih.gov/pmc/articles/PMC9034426/; https://www.ncbi.nlm.nih.gov/pmc/articles/PMC7093773/; https://www.sciencedirect.com/science/article/abs/pii/S0020748921003084; https://www.researchgate.net/publication/333479278.

[32] *See*, *e.g.*, https://www.pcmag.com/reviews/ringconn-smart-ring; CX-0020C; CX-0021C; https://sleepreviewmag.com/sleep-diagnostics/consumer-sleep-tracking/wearable-sleep-trackers/ringconn-reveals-upcoming-sleep-apnea-monitoring-smart-ring/#:~:text=This%20includes%20a%20comprehensive%20Sleep,constant%20hardware%20and%20software%20updates.

[33] https://sleepreviewmag.com/sleep-diagnostics/consumer-sleep-tracking/wearable-sleep-trackers/ringconn-reveals-upcoming-sleep-apnea-monitoring-smart-

An exclusion order would also negatively impact ongoing and planned research in the health and wellness space, particularly studies related to metabolic health and personalized patient care. RingConn has additional conducted .[34] The exclusion would hinder the collection of valuable data from these studies, potentially delaying or preventing groundbreaking medical knowledge that could benefit public health.

Exclusion of the RingConn Smart Ring would harm public health and welfare by denying the public potentially groundbreaking medical knowledge acquired from these studies. The comprehensive data collected by the RingConn Smart Ring could lead to new insights into the management and treatment of various health conditions, further emphasizing the need for these devices to remain available in the market.

2. Competitive and Economic Considerations

The requested remedial order(s) would create an overly expansive monopoly in the smart ring space to the detriment of consumers. Competition drives companies to reduce product prices, increase product quality, and invest in further technological research. Without competition, companies lose the incentive to innovate and provide affordable, reliable health and wellness

---

ring/#:~:text=This%20includes%20a%20comprehensive%20Sleep,constant%20hardware%20and%20software%20updates.

[34] RX-0215; RX-0216; RX-0217; RX-0218.

Patent Owner Oura Ex. 2014, 0468

[redacted]

information. As a new entrant in the smart ring market, RingConn's exclusion could discourage other companies from entering the market, further stifling innovation and competition.

The application corresponding to the RingConn Smart Ring can be used without subscription fees, giving consumers unlimited access to their data immediately after purchasing the ring. Excluding such products from the market would deprive consumers of the ability to purchase a product that best aligns with their financial and medical needs.

Oura has demonstrated a policy of litigating its patents against other companies developing and selling smart rings. Oura has filed suit multiple district court proceedings and this investigation against at least RingConn, Ultrahuman, and Circular. On the day that Samsung announced its Galaxy ring, Oura's CEO stated it had the "strongest IP portfolio – in both hardware and software – for the smart ring form factor."[35] Oura's CEO also stated that it would "take the action that's appropriate," after determining whether Oura could assert its patents against Samsung[36]. When Oura filed its complaint in this investigation, Oura stated it would "always protect" its "countless hours of design, scientific research, and engineering into our hardware, software, and algorithms."[37] Due to these statements, Oura will likely continue to assert its IP against other corporations that sell smart rings.

Oura is trying to eliminate any competition for their products through this investigation and its public statements regarding litigating its patents. Banning importation of competing products will have a chilling effect on innovation in the wearable smart device space. For example, many customers have already given Oura's products extremely negative reviews, namely it "felt

---

[35] https://techcrunch.com/2024/01/17/samsung-is-taking-on-oura-with-the-galaxy-ring/.
[36] https://www.youtube.com/watch?v=IX0A1LTgdNE.
[37] https://ouraring.com/blog/oura-files-itc-action-for-patent-infringement/.

[redacted]

cheap" for the price, has limited sizing choices, it "hurts," it is a limited health tracker, it is inaccurate, and is otherwise an "over-priced hack."[38]

3. Lack of Reasonable Alternatives

Oura fails to identify reasonable alternatives to the RingConn Smart Ring. Traditional health-monitoring devices like smartwatches are often cumbersome and uncomfortable, leading to disrupted and inaccurate readings, especially during sleep monitoring. The exclusion of the RingConn Smart Ring would therefore deprive consumers of a superior health-monitoring solution that aligns with their financial and medical needs. This includes sleep apnea monitoring and 10-12 day battery life.

Oura's assertion that there are reasonable substitutes for the RingConn Smart Ring lacks substantiation. The reliability and accuracy of data collected from a smart ring is not necessarily comparable to data collected from other devices, and Oura has not demonstrated that any device is a reasonable substitute.[39] Additionally, Oura has failed to show that it or other companies have the capacity to replace the volume of articles sold by RingConn in a commercially reasonable time.

Removal of the RingConn Smart Ring would remove options that are just as or more accurate than the Oura ring and that provide a better option to consumers because it is less expensive and without a monthly subscription. The products from other companies that Oura has identified in its interrogatory response make up a relatively small amount of the market and Oura

---

[38] *See* https://medium.com/biohacker/after-using-the-oura-ring-for-3-months-i-sold-it-b4b303d4e2f8; https://www.digitaltrends.com/mobile/i-want-to-love-the-oura-ring-but-i-cant/; "Oura Ring is LYING to You: Here Are The Facts" (https://www.youtube.com/watch?v=6byBtAmyITc).

[39] *See, e.g.,* https://ouraring.com/ ("Your finger provides the most accurate reading of over 20 biometrics that directly impact how you feel.").

[redacted]

itself admitted that it does not know the production capacity of these companies. *See* RX-0329C at 16-19 (ROG No. 8).

As of at least March 2024, Oura was unable to meet demand for its own product, despite allegedly having significant quantities of inventory.[40] Thus, Oura does not have the manufacturing capacity to fulfill its own orders, let alone fulfill its own orders and replace the volume of accused products from RingConn, Circular, and Ultrahuman that are potentially subject to an exclusion order.

Again, decreasing the availability of wearable smart devices with fitness and vital sign tracking will have a negative impact on public health, as wearable smart devices include a number of human health benefits, as just one example, a wearable smart device is correlated to lower BMI and lower rates of cardiovascular issues.[41]

4. Specific Examples of Public Interest Harm

a. Ongoing Medical Studies:

Exclusion of the RingConn Smart Ring would disrupt ongoing medical studies that rely on its unique data collection capabilities. For example, [redacted] Wu Tr. at 85:3-88:13.

b. Partnerships with Research Institutions

---

[40] *See, e.g.,* https://sleepopolis.com/news/oura-ring-shipping-delays/.

[41] *See e.g.,* https://www.ncbi.nlm.nih.gov/pmc/articles/PMC9034426/; https://www.ncbi.nlm.nih.gov/pmc/articles/PMC7093773/; https://www.sciencedirect.com/science/article/abs/pii/S0020748921003084; https://www.researchgate.net/publication/333479278.

[redacted]

RingConn is working with many different research institutions [redacted]. Wu Tr. at 85:3-88:13. Excluding the RingConn Smart Ring from the market would jeopardize these collaborations and hinder progress in understanding and improving patient care.

c. Expansion of Health-Tracking Technology

RingConn has plans to expand its health-tracking technology to cover more biomarkers and provide even more comprehensive health insights. This includes developing new features and improving existing ones based on user feedback and ongoing research. An exclusion order would stall these advancements, depriving the public of innovative health-monitoring tools that could significantly improve their well-being.

5. <u>Exemptions, Delays</u>

The Commission should exempt service, repair, and replacement of the accused products to enable consumers to continue benefiting from their health-monitoring devices. If a remedial order does issue in this case, RingConn should be able to continue to service, repair, and replace existing RingConn products in the United States.

The public interest in allowing continued service, repair, and replacement of existing RingConn Smart Ring is significant. These devices provide continuous monitoring and health insights that are crucial for managing chronic conditions and overall well-being. Disrupting access to these services would not only impact individual users but also the broader healthcare community that relies on the data for research and treatment advancements.

The Commission should also provide an exemption to facilitate the ongoing research, which will benefit the public health significantly.

[redacted]

Otherwise, the Commission should delay issuance of a remedial order for up to one year to allow users of the accused products to switch to another product. Without a delay, existing RingConn customers may experience disruptions in their health-monitoring, which can negatively affect their health.

6. Conclusion

In light of these considerations, the requested remedial orders are against the public interest. They would deprive the public of a reliable and efficient mechanism to monitor health, negatively impact ongoing health research, and stifle competition and innovation in the health-monitoring market. Therefore, a remedial order should not issue in this case. Further, at a minimum, if a remedial order does issue in this case, RingConn should be able to continue to service, repair, replace, and continue researching existing RingConn products in the United States. Otherwise, a remedial order should be delayed in order to facilitate customers switching to another product without additional, significant disruptions.

X. REMEDY AND BOND

A. Ultrahuman

Oura is not entitled to any remedy in this Investigation at least because Ultrahuman does not infringe the Asserted Patent, the Asserted Patent is invalid, and Oura has not met its burden of proof that a domestic industry exists in the United States.

On top of that, Ultrahuman is moving the production to the United States, with Ultrahuman CEO and founder Mohit Kumar testifying that "[redacted]" (JX-0011C.0018 at 69:11-15), which is referred

[redacted]

to as "UltraFactory."[42] Indeed, Mr. Kumar testified that [redacted]. He further testified that [redacted] JX-0011C.0018-19 at 69:23-71:9. There thus will be no occasion for any remedy to issue against Ultrahuman. *Certain Agricultural Tractors Under 50 Power Take-Off Horsepower*, Inv. No. 337-TA-380, Comm'n Op. at 17, EDIS Doc. ID 45159 (Mar. 12, 1997) ("Importation (or at least a sale for importation) of the infringing articles is an essential element of a violation of section 337 and a product which infringes, but which has not been imported, cannot be the basis for a finding of violation."); *see also Certain Integrated Circuit Telecommunication Chips and Products Containing Same Including Dialing Apparatus*, Inv. No. 337-TA-337, USITC Pub. No. 2670, 1993 WL 13033517, Comm'n Op. at 24-25 (Aug. 1993) ("In the absence of evidence of importation or sale for importation of the infringing UMC chip, we conclude that complainant has failed to prove a violation of section 337 against UMC.").

At any rate, to the extent Oura is entitled to any remedy—it is not—that remedy must be narrowly tailored to the unique facts of this case.

1. <u>Exclusion Order</u>

First, Ultrahuman's mobile app should not be included in any exclusion order. The Ultrahuman mobile app [redacted]. JX-0011C.0020 at 75:1-8.

---

[42] *See also Ultrahuman plants flag in US with UltraFactory to make first wearable rings in the country*, ULTRAHUMAN (Apr. 23, 2024), https://cyborg.ultrahuman.com/press-releases/made-in-the-usa-ultrahuman-plants-flag-in-us-with-manufacturing-facility-ultrafactory-to-make-first-wearable-rings-in-the-country.

Nor can the Ultrahuman mobile app infringe the ’178 Patent, which is directed to a *ring*, not a software application. Indeed, the parties agree that the preamble is limiting and the preamble expressly requires a “ring device” and the remaining limitations are directed to hardware components associated with that ring. Dr. Sarrafzadeh opines RX-0402.20, ¶ 45.

Second, any exclusion order preventing the importation of the Ultrahuman Accused Products will not serve the public interest. As just one example, there is clearly demand for health-monitoring devices such as the products at issue in this Investigation—however, excluding Ultrahuman’s Accused Product from being imported will only serve to prevent that demand from being met. Since the start of this Investigation, Oura has been unable to meet the demand for these products. Indeed, on March 9, 2024, Oura’s CEO Tom Hale issued a press release apologizing for “shipping delays” and “unacceptable delays” experienced by those purchasing Oura Ring. RX-0445.1. Mr. Hale stated that it was “taking time for [Oura] to catch up” to meet demand and “build more inventory to get [customers’] ring[s] packed and shipped” and repeatedly apologized to Oura’s customers and potential customers. *Id.* This inability to meet demand has continued with delays being reported as recently as October 31. RX-0446.1. Precluding the Ultrahuman Accused Products from being imported will not serve the public interest as the demand that exists for smart rings will be even harder to meet without the presence of Ultrahuman’s Accused Products in the marketplace. And reducing supply by excluding Ultrahuman’s Accused Products will serve only to increase the cost of access to health-monitoring rings, which also does not serve the public

[redacted]

interest. For example, to access the full feature set of the Oura ring, customers are required to pay a mandatory subscription fee. As Oura's expert Carla Mulhern testified, [redacted]." RX-0324C.16 at 58:19-59:8. Ultrahuman, on the other hand, does not charge a subscription fee. JX-0011C.0019 at 72:17-21.

Moreover, the Ultrahuman ring provides unique and important technology. For example, Ultrahuman's rings can work in conjunction with its M1 Live Glucose Tracking device to provide tailored insights into a person's unique metabolic needs.[43] Oura includes nothing similar.

Third, any limited exclusion order that issues should also include an exception for service, repair, or replacement articles for products that were imported prior to the effective date of the limited exclusion order. *See, e.g.*, *Certain Automated Teller Machines, ATM Modules, Components Thereof, and Products Containing the Same*, Inv. No. 337-TA-989, Comm'n Op. at 32 (U.S.I.T.C. Aug. 3, 2017).

Fourth, to the extent a remedy issues, it should include a reporting requirement. And to the extent Oura meets its burden to prove the existence of a domestic industry, such domestic industry is either in decline or does not yet exist. Thus, Oura should be required to certify, at least on a quarterly basis, that it is exploiting the Asserted Patent, or that it is taking tangible steps to do so in the future. *See, e.g.*, *Certain Biometric Scanning Devices*, *Components Thereof, Associated Software, and Products Containing the Same,* Inv. No. 337-TA-720, Comm'n Op. at 23-24 (Nov. 10, 2011). To the extent Oura is found to have a domestic industry "in the process of being

[43] RX-0447.6.

[redacted]

established," any remedy must be limited in time such that if Oura has not established a domestic industry within one year of the final determination, any exclusion order should be rescinded.

2. <u>Cease and Desist Order</u>

Oura also is not entitled to a cease and desist order. For a cease and desist order to issue, the complainant must establish that a respondent maintains a commercially significant inventory of infringing products in the United States. *See, e.g.*, *Certain Optoelectronic Devices, Components Thereof, and Products Containing the Same*, Inv. No. 337-TA-669, Comm'n Op. at 4-6, (U.S.I.T.C. July 26, 2010). On this point, Ms. Mulhern and Oura have failed to meet their burden of proving that Ultrahuman maintains a commercially significant inventory of Ultrahuman Accused Products in the United States. Ms. Mulhern admits that [redacted], (RX-0392), [redacted]. RX-0324C.49-50 at 192:5-195:11. Further, Ms. Mulhern [redacted]. *Id.*; *see also id.* at 189:18-190:3. [redacted] RX-0412C.61-62 ¶ 112.) [redacted]. *Id.* Regardless, sale of remaining products in stock has been allowed when, as is the case here, there is no evidence of large inventories or stockpiling. *See, e.g.*, *Certain*

[redacted]

Nonwoven Gas Filter Elements, Inv. No. 337-TA-275, U.S.I.T.C. Pub. No. 2129, Comm'n Op. and Order (Sept. 1988).

Alternatively, Ultrahuman should be permitted to re-export remaining U.S. inventory. *See, e.g.*, *Certain Automotive Fuel Caps and Radiator Caps and Related Packaging and Promotional Materials*, 337-TA-319, U.S.I.T.C. Pub. No. 2481, Comm'n Op. and Order (Feb. 1992).

3. <u>Bond</u>

Oura has not proven that it is entitled to at least a [redacted] bond. Bond is designed to protect a complainant from injury during the Presidential Review Period. *Certain Silicon Microphone Packages and Products. Containing the Same*, Inv. No. 337-TA-629, Comm'n Op. at 17-19, (U.S.I.T.C. July 16, 2009). But Oura has not shown that it is likely to suffer any injury at all during that period—indeed, it makes no allegations whatsoever that relate to any alleged injury, beyond that the bond should be "sufficient to protect Complainants from injury."

Oura failed to meet its burden on bond and the bond rate should therefore be zero. *Certain Coenzyme Q10 Products. & Methods of Making Same*, Inv. No. 337-TA-790, Initial Determination at 377-80 (U.S.I.T.C. Sept. 27, 2012); *Certain Personal Data & Mobile Communication Devices & Related Software*, Inv. No. 337-TA-710, Comm'n Op. at 84-85 (U.S.I.T.C. Dec. 2011); *Certain Silicon Microphone Packages and Products Containing the Same*, Inv. No. 337-TA-629, Comm'n Op. at 19-20.

Even if Oura met its burden, it has failed to show that a bond of at least [redacted] is warranted here. Oura expert Carla Mulhern's bond analysis improperly takes into account the subscription cost associated with owning an Oura ring and adds that cost to the cost of the ring to calculate a total cost of ownership, applying an arbitrary three year ownership period. [redacted] (RX-0324C.51 at 197:7-22), [redacted]

Id. at 198:13-20. Regardless, the subscription is not required to use the Oura ring, (RX-0324C.14 at 52:12-20 ("[redacted]")), and unlocks only certain features that are related to use of the app, (RX-0324C.16 at 57:4-22 [redacted])), which is unclaimed and thus should not be considered for bond purposes. [redacted] RX-0412C.71-72 ¶ 133.

Ms. Mulhern further admits [redacted]. RX-0324C.51-52 at 199:1-201:8. Even considering the fact that Oura recently discontinued its cheapest $299 model, the cheapest Oura ring is now $349 (plus requiring monthly subscription costs), the same price as Ultrahuman's ring. *Id*.

Thus, Oura has failed to prove an entitlement to *any* bond, let alone a bond set at [redacted] at a minimum, and certainly not at the higher percentage when taking into account rose gold finishes on the ring.

B. RingConn

Complainants are not entitled to any remedy in this Investigation against RingConn at least because RingConn does not infringe the '178 Patent, the '178 Patent is invalid, and Oura has not met its burden of proof that a domestic industry exists in the United States. Although no

[redacted]

remedy is appropriate here, should one be ordered, it must be narrowly tailored and restricted to a limited exclusion order ("LEO") directed only to the RingConn Accused Products (and not to RingConn's mobile app). Moreover, to the extent a LEO is issued, it must carve out the accused RingConn products that have been found not to infringe.

1. Complainants Are Not Entitled to a Limited Exclusion Order Against RingConn

First, RingConn's mobile app should not be included in any exclusion order. The RingConn mobile app is not imported and is not an article for importation. Nor can the RingConn mobile app infringe the '178 Patent, which is directed to a *ring*, not a software application. Indeed, the parties agree that the preamble is limiting, and the preamble expressly requires a "ring device" and the remaining limitations are directed to hardware components associated with that ring. Dr. Sarrafzadeh [redacted] RX-0402 at ¶ 51. [redacted]

Second, any exclusion order preventing the importation of the RingConn Accused Products will not serve the public interest. As just one example, there is clearly demand for health-monitoring devices such as the products at issue in this Investigation—however, excluding RingConn's Accused Product from being imported will only serve to prevent that demand from being met. Since the start of this Investigation, Oura has been unable to meet the demand for these products. Indeed, on March 9, 2024, Oura's CEO Tom Hale issued a press release apologizing for "shipping delays" and "unacceptable delays" experienced by those purchasing Oura Ring. Mr. Hale stated that it was "taking time for [Oura] to catch up" to meet demand and "build more

[redacted]

inventory to get [customers'] ring packed and shipped" and repeatedly apologized to Oura's customers and potential customers. This inability to meet demand has continued with delays being reported as recently as October 31. Precluding the RingConn Accused Products from being imported will not serve the public interest as it the demand that exists for smart rings will be even harder to meet without the presence of RingConn's Accused Products in the marketplace. And reducing supply by excluding RingConn's Accused Products will serve only to increase the cost of Oura's ring, which also does not serve the public interest. For example, to access the full feature set of the Oura ring, customers are required to pay a subscription fee. As Oura's expert Carla Mulhern testified, "[redacted]." (Mulhern Dep. Tr. at 58:19-59:8.) RingConn, on the other hand, does not charge a subscription fee. Moreover, RingConn's ring provides unique technology having the longest lasting, thinnest, and only ring with sleep apnea monitoring.

Third, any remedy that issues should also include a reporting requirement. To the extent Complainants are found to have any domestic industry at all—which does not exist—Complainants must be required to certify, on at least a quarterly basis, that it continues to exploit the patents-in-suit. *See, e.g., Certain Biometric Scanning Devices*, 337-TA-720, Comm'n Op. at 23-24 (Nov. 10, 2011).

Additionally, any remedy that issues should likewise include a certification provision to minimize the possibility that U.S. Customers and Board Protection ("CBP") will exclude non-infringing products from entry into the United States. *See, e.g., Certain Digital Video Receivers and Related Hardware and Software Components*, 337-TA-1103, ID at 314-315 (June 4, 2019) (quoting *Certain Digital Televisions & Certain Prods. Containing Same & Methods of*

Using Same, 337-TA-617, Comm'n Op. at 11 (Apr. 23, 2009) ("Certification provisions are necessary to minimize the possibility that non-infringing products will be excluded from entry into the United States when CBP is unable to determine readily by inspection whether an imported product violates a particular exclusion order.") And to the extent Oura is found to have a domestic industry "in the process of being established," any remedy must be limited in time such that if Oura has not established a domestic industry within one year of the final determination, any exclusion order should be rescinded.

2. Complainants are Not Entitled to a Cease and Desist Order Against RingConn

Complainants will not be able to show that a cease-and-desist order is necessary to prevent circumvention of a limited exclusion order. A complainant seeking a cease-and-desist order in addition to an exclusion order must demonstrate that this additional remedy is necessary to address the violation found in the investigation so as to not undercut the relief provided by an exclusion order. *Certain Integrated Repeaters, Switches, Transceivers, and Prods. Containing Same,* Inv. No. 337-TA-435, Comm'n Op. at 27 (Aug. 16, 2002).

Here, Complainants are not entitled to a cease-and-desist order. For a cease-and-desist order to issue, complainant must establish that a respondent maintains a commercially significant inventory of infringing products in the United States. *See, e.g.*, *Certain Optoelectronic Devices, Components Thereof, and Products Containing the Same*, Inv. No. 337-TA-669, Comm'n Op. at 4-6, (U.S.I.T.C. July 26, 2010); *see also Certain Electric Skin Care Devices, Brushes and Chargers Therefor, and Kits Containing the Same*, Inv. No. 337-TA-959, Comm'n Op. at 26 (Feb. 6, 2017).

[redacted]

[redacted] The Commission has found inventories to be "commercially significant" based on their absolute value, or on a comparison between the quantity and the volume of product at issue sold or imported. *Certain Optoelectronic Devices for Fiber Optic Commc'ns, Components Thereof & Prods. Containing Same*, Inv. No. 337-TA-860, Comm'n Op. at 36-37 (May 9, 2014). RingConn is also an entirely foreign-based entity and does not have significant domestic operations. Regardless, sale of remaining products in stock has been allowed when, as is the case here, there is no evidence of large inventories or stockpiling. *See, e.g.*, *Certain Nonwoven Gas Filter Elements*, Inv. No. 337-TA-275, U.S.I.T.C. Pub. No. 2129, Comm'n Op. and Order (Sept. 1988).

At a minimum, the Commission should decline to enter an order that would prevent RingConn from servicing and repairing products purchased by United States customers as against the public interest.

3. <u>Bond</u>

Complainants have not carried their burden of showing what bond rate is appropriate. If the Commission enters an exclusion order, a respondent may continue to import and sell covered, unlicensed products during the 60-day Presidential review period under a bond in an amount determined by the Commission to be "sufficient to protect the complainant from any injury." 19 U.S.C. § 1337(j)(3); see also 19 C.F.R. § 210.50(a)(3). Here, Complainants will not be able to establish that a bond is appropriate. *See Certain Marine SONAR Imaging Systems, Prods. Containing the Same, and Components Thereof*, Inv. No. 337-TA-926, Comm'n Op. at 59 (Dec. 17, 2015) ("Complainants bear the burden of establishing the need for a bond amount in the first place.") (*citing Certain Rubber Antidegradants, Components Thereof, and Products Containing Same*, Inv. No. 337-TA-533, Comm'n Op. at 40 (Jul. 21, 2006)).

Patent Owner Oura Ex. 2014, 0483

Specifically, Complainants have not shown that they are likely to suffer any injury at all during the Presidential review period—indeed, Complainants have made no allegations whatsoever that relate to any alleged injury, beyond that the bond should be "sufficient to protect the complainant from injury." 19 U.S.C. § 1337(j)(3); *see also* 19 C.F.R. § 210.50(a)(3). But this is insufficient to establish that a bond is appropriate.

Moreover, as to the rate of any bond (which, as noted above, is inappropriate), Complainants have not proven that they are entitled to at least a bond.

Complainants failed to meet their burden on bond and the bond rate should therefore be zero. *Certain Coenzyme Q10 Products. & Methods of Making Same*, Inv. No. 337-TA-790, Initial Determination at 377-80 (U.S.I.T.C. Sept. 27, 2012); *Certain Personal Data & Mobile Communication Devices & Related Software*, Inv. No. 337-TA-710, Comm'n Op. at 84-85 (U.S.I.T.C. Dec. 2011); *Certain Silicon Microphone Packages and Products Containing the Same*, Inv. No. 337-TA-629, Comm'n Op. at 19-20.

Even if Complainants had met their burden, they have failed to show that a bond of at least is warranted here. The bond analysis of Complainants' expert, Carla Mulhern, improperly takes into account the subscription cost associated with owning an Oura ring and adds that cost to the cost of the ring to calculate a total cost of ownership, applying an arbitrary three year ownership period. (Mulhern Dep. Tr. at 197:7-22), a. (*Id*. at 198:13-20.) Regardless, the subscription is not required to use the Oura ring (Mulhern Dep. Tr. 52:12-20 ("")), and unlocks only

[redacted]

certain features that are related to use of the app, (Mulhern Dep. Tr. at 57:4-22 ("[redacted]")), which is unclaimed and thus should not be considered for bond purposes. For similar reasons, Ms. Mulhern's [redacted]

(Mulhern Opening Report at ¶ 133.)

Thus, Oura has failed to prove an entitlement to *any* bond, let alone a bond set at [redacted] at a minimum, and certainly not at any higher percentage when taking into account rose gold finishes on the ring.

XI. CONCLUSION

For the above reasons, the Accused Products do not infringe the claims of the '178 Patent, the '178 Patent is invalid, the DI Products do not satisfy the claims of the '178 Patent, and no exclusion or cease and desist order should be entered against Respondents.

Dated: November 12, 2024

Respectfully submitted,

By: */s/ Robert M. Breetz*

Robert M. Breetz
Ryan B. McCrum
Emily C. Towers
Luke B. Cipolla
Owen T. Carpenter
JONES DAY
901 Lakeside Ave,
Cleveland, OH 44114
Tel: (216) 586-3939
rbreetz@jonesday.com
rbmccrum@jonesday.com
etowers@jonesday.com

Matthew J. Hertko
JONES DAY
110 North Wacker Drive, Suite 4800
Chicago, Illinois 60606
Tel: (312) 782-3939
mhertko@jonesday.com

Haifeng Huang
JONES DAY
31st Floor, Edinburgh Tower; The Landmark
15 Queen's Road
Central Hong Kong
Tel: +852.2526.6895
hfhuang@jonesday.com

lcipolla@jonesday.com
ocarpenter@jonesday.com
Counsel for Respondents Shenzhen Ninenovo Technology Limited and RingConn LLC

By: */s/ John Moehringer*
John T. Moehringer
Danielle V. Tully
Michael B. Powell
John T. Augelli
Catherine N. Taylor
Michael A. Russo
Cameron A. Kasanzew
CADWALADER, WICKERSHAM & TAFT LLP
200 Liberty Street
New York, NY 10281
Tel: (212) 504-6000
UltrahumanITC1398@cwt.com
Michael J. Schwartz
Timothy J. Murphy
David L. Atallah
Alex Szypa
Brian S. Tobin
CARLSON, GASKEY & OLDS, P.C.
400 W. Maple Rd., Suite 350
Birmingham, MI 48009
Tel: (248) 988-8360
ultrahumanitc@cgolaw.com

Counsel for Respondents Ultrahuman Healthcare Pvt. Ltd., Ultrahuman Healthcare Ltd., and Ultrahuman Healthcare SP LLC

[redacted]

CERTIFICATE OF SERVICE

I hereby certify that on November 12, 2024 unless otherwise indicated, one copy of the foregoing was filed/served on the following:

The Honorable Lisa R. Barton Secretary to the Commission **U.S. International Trade Commission** 500 E Street S.W., Room 112 Washington, DC 20436	By EDIS
The Honorable Doris Johnson Hines **U.S. International Trade Commission** 500 E Street S.W. Washington, DC 20436	By Email; JohnsonHines1398@usitc.gov
Whitney Winston, Esq. Office of Unfair Import Investigations **U.S. International Trade Commission** 500 E Street S.W., Room 401 Washington, D.C. 20436	By Email: whitney.winston@usitc.gov
Janine A. Carlan Jasjit S. Vidwan Richard J. Berman Bradford C. Frese Taniel E. Anderson Michael J. Baldwin **ARENTFOX SCHIFF LLP** 1717 K Street, NW Washington, DC 20006 Christopher S. Schultz **ARENTFOX SCHIFF LLP** 800 Boylston Street, 32nd Floor Boston, MA 02199	*Counsel for Complainants Ouraring, Inc. and Ōura Health Oy* By Email: janine.carlan@afslaw.com Oura-ITC@afslaw.com
John T. Moehringer **CADWALADER, WICKERSHAM & TAFT LLP** 200 Liberty Street New York, NY 10281 Timothy J. Murphy David L. Atallah Michael J. Schwartz Alex Szypa Brian S. Tobin **CARLSON, GASKEY & OLDS, P.C.** 400 West Maple Rd., Suite 350	*Counsel for Respondents Ultrahuman Healthcare Pvt. Ltd., Ultrahuman Healthcare Ltd., and Ultrahuman Healthcare SP, LLC* By Email: UltrahumanITC@cgolaw.com john.moehringer@cwt.com UltrahumanITC1398@cwt.com tmurphy@cgolaw.com

[redacted]

Birmingham, Michigan 48009	

/s/ *Andrea Solomon*
Andrea Solomon

CERTIFICATE OF SERVICE

I hereby certify that on November 19, 2024 unless otherwise indicated, one copy of the foregoing was filed/served on the following:

The Honorable Lisa R. Barton Secretary to the Commission **U.S. International Trade Commission** 500 E Street S.W., Room 112 Washington, DC 20436	By EDIS
The Honorable Doris Johnson Hines **U.S. International Trade Commission** 500 E Street S.W. Washington, DC 20436	By Email; JohnsonHines1398@usitc.gov
Whitney Winston, Esq. Office of Unfair Import Investigations **U.S. International Trade Commission** 500 E Street S.W., Room 401 Washington, D.C. 20436	By Email: whitney.winston@usitc.gov
Janine A. Carlan Jasjit S. Vidwan Richard J. Berman Bradford C. Frese Taniel E. Anderson Michael J. Baldwin **ARENTFOX SCHIFF LLP** 1717 K Street, NW Washington, DC 20006 Christopher S. Schultz **ARENTFOX SCHIFF LLP** 800 Boylston Street, 32nd Floor Boston, MA 02199	*Counsel for Complainants Ouraring, Inc. and Ōura Health Oy* By Email: janine.carlan@afslaw.com Oura-ITC@afslaw.com
John T. Moehringer **CADWALADER, WICKERSHAM & TAFT LLP** 200 Liberty Street New York, NY 10281 Timothy J. Murphy David L. Atallah Michael J. Schwartz Alex Szypa Brian S. Tobin	*Counsel for Respondents Ultrahuman Healthcare Pvt. Ltd., Ultrahuman Healthcare Ltd., and Ultrahuman Healthcare SP, LLC* By Email: UltrahumanITC@cgolaw.com john.moehringer@cwt.com UltrahumanITC1398@cwt.com tmurphy@cgolaw.com

CARLSON, GASKEY & OLDS, P.C. 400 West Maple Rd., Suite 350 Birmingham, Michigan 48009	

/s/ *Andrea Solomon*
Andrea Solomon

Patent Owner Oura Ex. 2014, 0490