US005901327A

United States Patent [19]

Ofek

[11] **Patent Number: 5,901,327**

[45] **Date of Patent: May 4, 1999**

[54] **BUNDLING OF WRITE DATA FROM CHANNEL COMMANDS IN A COMMAND CHAIN FOR TRANSMISSION OVER A DATA LINK BETWEEN DATA STORAGE SYSTEMS FOR REMOTE DATA MIRRORING**

[75] Inventor: **Yuval Ofek**, Hopkinton, Mass.

[73] Assignee: **EMC Corporation**, Hopkinton, Mass.

[21] Appl. No.: **08/818,455**

[22] Filed: **Mar. 17, 1997**

Related U.S. Application Data

[62] Division of application No. 08/654,511, May 28, 1996, Pat. No. 5,742,792.

[51] **Int. Cl.**[6] **G06F 13/00**

[52] **U.S. Cl.** **395/825**; 395/200.62; 395/840; 395/841; 711/100; 711/112

[58] **Field of Search** 395/849, 825, 395/200.67, 182.03, 489, 182.11, 828, 185.07, 182.04, 839, 440; 711/162, 113

[56] **References Cited**

U.S. PATENT DOCUMENTS

3,588,839	6/1971	Belady et al.	395/469
3,835,260	9/1974	Prescher et al.	379/237

(List continued on next page.)

FOREIGN PATENT DOCUMENTS

0239323	9/1987	European Pat. Off. .
0323123	12/1988	European Pat. Off. .
57-111900	7/1982	Japan .
1-19437	1/1989	Japan .
1-19438	1/1989	Japan .
1-120650	5/1989	Japan .
2-32418	2/1990	Japan .
2-32419	2/1990	Japan .
2-32420	2/1990	Japan .
2-91716	3/1990	Japan .
2-91717	3/1990	Japan .

(List continued on next page.)

OTHER PUBLICATIONS

D.L. Burkes & R.K. Treiber, "Design Approaches for Real–Time Transaction Processing Remote Site Recovery," Computer Society International Conference (COMPCON), Spring Meeting, Los Alamitos, Feb. 26–Mar. 2, 1990, No., CONF. 35, Feb. 23, 1990, Institute of Electrical and Electronics Engineers, New York, N.Y., pp. 568–572.

(List continued on next page.)

Primary Examiner—Tod R. Swann
Assistant Examiner—Fred F. Tzeng
Attorney, Agent, or Firm—Arnold White & Durkee

[57] **ABSTRACT**

Two data storage systems are interconnected by a data link for remote mirroring of data. Each volume of data is configured as local, primary in a remotely mirrored volume pair, or secondary in a remotely mirrored volume pair. Normally, a host computer directly accesses either a local or a primary volume, and data written to a primary volume is automatically sent over the data link to a corresponding secondary volume. The host computer sends chains of channel commands to the data storage system containing a primary (R1) volume of a remotely mirrored volume pair. In order to more effectively use the capacity of the data link, the data storage system containing the primary (R1) volume bundles the write data for all write commands in the chain into a single write command for transmission over the data link to the secondary data storage system containing the secondary (R2) volume. The data storage system containing the primary (R1) volume decodes the channel commands to determine when it has received the last channel command in the chain, and once the last channel command in the chain is received, it transmits the bundle of write data for the chain over the data link to the data storage system containing the secondary (R2) volume. In a preferred implementation, the write data is stored in a cache memory in the data storage system containing the primary (R1) volume, and the data storage system containing the primary (R1) volume bundles the write data by accumulating, in a buffer, pointers to the write data in the cache memory.

31 Claims, 21 Drawing Sheets

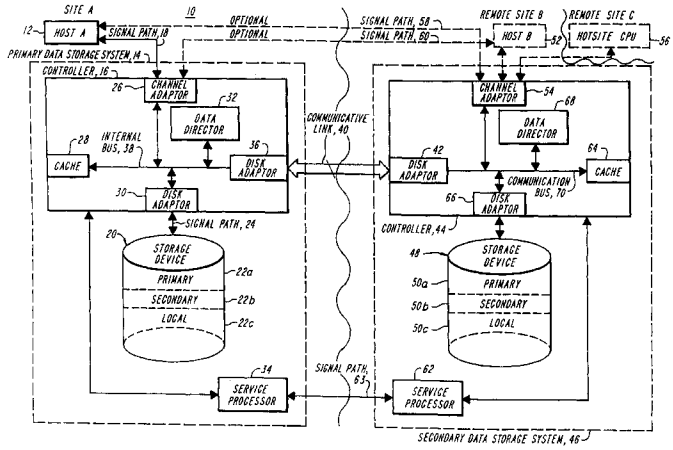

U.S. PATENT DOCUMENTS

3,866,182	2/1975	Yamada et al.	711/162
4,020,466	4/1977	Cordi et al.	711/143
4,057,849	11/1977	Ying et al.	345/193
4,084,231	4/1978	Capozzi et al.	711/117
4,094,000	6/1978	Brudevold	345/516
4,124,843	11/1978	Bramson et al.	345/171
4,150,429	4/1979	Ying	395/311
4,161,777	7/1979	Behnase et al.	395/293
4,204,251	5/1980	Brudevold	395/309
4,342,079	7/1982	Stewart et al.	711/5
4,396,984	8/1983	Videki II	395/858
4,430,727	2/1984	Moore et al.	711/115
4,453,215	6/1984	Reid	395/182.09
4,464,713	8/1984	Benhase et al.	711/205
4,577,272	3/1986	Ballew et al.	395/182.13
4,608,688	8/1986	Hanson et al.	395/182.04
4,634,100	1/1987	Julich et al.	254/43
4,698,808	10/1987	Ishii	371/21.5
4,710,870	12/1987	Blackwell et al.	364/242.94
4,755,928	7/1988	Johnson et al.	395/182.64
4,769,764	9/1988	Levanon	361/680
4,779,189	10/1988	Legvold et al.	711/166
4,783,834	11/1988	Anderson et al.	382/245
4,785,472	11/1988	Shapiro	379/93.19
4,797,750	1/1989	Karweit	386/96
4,805,106	2/1989	Pfeifer	395/726
4,814,592	3/1989	Bradt et al.	235/381
4,837,680	6/1989	Crockett et al.	395/284
4,841,475	6/1989	Ishizuka	395/849
4,849,978	7/1989	Dishon et al.	395/182.04
4,862,411	8/1989	Dishon et al.	711/167
4,916,605	4/1990	Beardsley et al.	711/162
4,949,187	8/1990	Cohen	386/69
4,985,695	1/1991	Wilkinson et al.	340/571
5,007,053	4/1991	Iyer et al.	371/21.1
5,029,199	7/1991	Jones et al.	379/89
5,051,887	9/1991	Berger et al.	364/243
5,060,142	10/1991	Menon et al.	395/825
5,060,185	10/1991	Naito et al.	707/202
5,089,958	2/1992	Horton et al.	395/182.03
5,097,439	3/1992	Partriquin et al.	711/2
5,099,485	3/1992	Bruckert et al.	395/182.09
5,123,099	6/1992	Shibata et al.	711/120
5,127,048	6/1992	Press et al.	369/180
5,132,787	7/1992	Omi et al.	358/524
5,134,711	7/1992	Asthana et al.	395/800.17
5,146,576	9/1992	Beardsley et al.	711/113
5,146,605	9/1992	Beukema et al.	395/821
5,155,814	10/1992	Beardsley et al.	395/872
5,155,835	10/1992	Belsan	711/114
5,155,845	10/1992	Beal et al.	395/182.04
5,157,770	10/1992	Beardsley et al.	711/112
5,159,671	10/1992	Iwami	395/840
5,170,471	12/1992	Bonevento et al.	395/837
5,175,837	12/1992	Arnold et al.	711/152
5,175,839	12/1992	Ikeda et al.	711/200
5,185,864	2/1993	Bonevento et al.	395/868
5,201,053	4/1993	Benhase et al.	395/289
5,202,887	4/1993	Ueno et al.	395/182.06
5,206,939	4/1993	Yanai et al.	711/4
5,210,865	5/1993	Davis et al.	395/182.04
5,235,690	8/1993	Beardsley et al.	711/113
5,235,692	8/1993	Ayres et al.	395/849
5,239,659	8/1993	Rudeseal et al.	395/182.05
5,263,154	11/1993	Eastridge et al.	395/182.04
5,269,011	12/1993	Yanai et al.	395/280
5,274,645	12/1993	Idelman et al.	395/182.04
5,276,867	1/1994	Kenley et al.	707/204
5,285,451	2/1994	Henson et al.	371/40.15
5,313,664	5/1994	Sugiyama et al.	705/21
5,335,352	8/1994	Yanai et al.	395/871
5,343,477	8/1994	Yamada	395/182.02
5,375,232	12/1994	Legvold et al.	711/162
5,377,342	12/1994	Sakai et al.	711/161
5,379,412	1/1995	Eastridge et al.	395/575
5,381,539	1/1995	Yanai et al.	711/133
5,428,796	6/1995	Iskiyan et al.	395/728
5,446,872	8/1995	Ayres et al.	395/180
5,459,857	10/1995	Ludlam et al.	395/182.04
5,463,752	10/1995	Behnase et al.	395/481
5,526,484	6/1996	Casper et al.	395/200.67
5,537,533	7/1996	Staheli et al.	395/182.03
5,544,345	8/1996	Carpenter et al.	711/150
5,544,347	8/1996	Yanai et al.	711/162
5,555,371	9/1996	Duyanovich et al.	395/182.11
5,574,950	11/1996	Hathorn et al.	395/828
5,584,039	12/1996	Johnson et al.	395/826
5,592,618	1/1997	Micka et al.	395/185.07
5,613,155	3/1997	Baldiga et al.	395/825
5,615,329	3/1997	Kern et al.	395/182.04
5,673,382	9/1997	Cannon et al.	395/182.04
5,680,580	10/1997	Beardsley et al.	395/489
5,680,640	10/1997	Ofek et al.	395/839
5,682,513	10/1997	Candelaria et al.	395/440

FOREIGN PATENT DOCUMENTS

2-93721	4/1990	Japan .	
2086625	5/1992	United Kingdom .	
PCT/US/93/05853	4/1994	WIPO .	
WO94/25919	11/1994	WIPO	G06F 12/16
PCT/US/84/01678	7/1995	WIPO .	

OTHER PUBLICATIONS

Supplementary European Search Report for EP 94 91 4223, Jul. 1, 1997.

International Search Report for PCT/US/94/04326, Jul. 20, 1994.

PCT Written Opinion for PCT/US94/04326, Feb. 28, 1995.

PCT International Preliminary Examination Report for PCT/US94/04326, Jul. 18, 1995.

SFT Netware 286 Maintenance, #100–313–001, 100/Revl.00, Novel Incorporated, Provo, Utah, Nov. 1987.

SFT Netware 286 Installation, #100–312–001, 100/Revl.00, Novel Incorporated, Provo, Utah, Nov. 1987.

SFT Netware 286 Installation Supplement, #100–000225–001, 26/Revl.02, Novel Incorporated, Provo, Utah, Jun. 1986.

SFT Netware 68 Maintenance, #100–000289–001, 64/Revl.00, Novel Incorporated, Provo, Utah, Nov. 1986.

SFT Netware 68 Installation, #100–000317–001, 103/Revl.00, Novel Incorporated, Provo, Utah, Feb. 1988.

SFT Netware 68 Installation Supplement, #100–000286–001, 61/Revl.00, Novel Incorporated, Provo, Utah, Dec. 1986.

Symmetrix Remote Data Facility (SRDF) Product Guide, P/N 200–999–554 Rev A, EMC Corporation, Hopkinton, Mass., Sep. 1994, 105 pages [EMCP 00003686–3791].

"Symmetrix Remote Data Facility Data Sheet, Symmetrix–resident Software Feature to extend mirroring capabilities," EMC Corporation, Hopkinton, Mass., Apr. 1995, 4 pages [EMCP 00010741–1074].

"When Data is Lost in Minutes, its an Act of God. When Data is Recovered in Minutes, its an Act of EMC." EMC Corporation, Hopkinton, Mass., 1994, one page [EMCP 00003903].

"EMC Ships Mainframe Disaster Recovery Solution that Restores Data in Minutes," News from EMC Corporation, EMC Corporation, Hopkinton, Mass., Oct. 3, 1994, two pages [EMCP 00003921–3922].
"Asset Protection: Disk–Based Approach Makes Disaster Recovery More Efficient," Ensures Business Continuity, EMC Corporate Information, EMC Corporation, Hopkinton, Mass., 5 pages [EMCP 00003916–3920].
"EMC Ships Continuously–Available Disk–Based Disaster Recovery Solution," News from EMC Corporation, EMC Corporation, Hopkinton, Mass., Oct. 3, 1994, 4 pages [EMCP 00003923–8926].
"Symmetrix Remote Data Facility: Taking the disaster out of disaster recovery," Brochure, EMC Corporation, Hopkinton, Mass., Sep. 1994, 8 pages [EMCP 00003908–3915].
"Symmetrix Remote Data Facility: EMC redefines disaster recovery," Brochure, EMC Corporation, Hopkinton, Mass., Sep. 1994, 4 pages [EMCP 00003904–3907].
"EMC Introduces Symmetrix 5500 Continuous Operation Disk Storage for Mission Critical IBM Mainframe Market," News from EMC Corporation, Hopkinton, Mass., Nov. 10, 1992, 3 pages.
"MCI Deploys New Fast Data Transfer Technology from EMC," News from EMC Corporation, Hopkinton, Mass., May 22, 1995, 2 pages [EMCP 00007520–7521].
"EMC Agreement with Data Switch to Promote Long Distance Disaster Recovery," News from EMC Corporation, EMC Corporation, Hopkinton, Mass., Nov. 30, 1994, 2 pages [EMCP 00007516–7517].
"EMC and Comdisco to Benchmark Data Mirroring Capability," News from EMC Corporation, EMC Corporation, Hopkinton, Mass., Jan. 24, 1995, 2 pages [EMCP 00007518–7519].
"EMC Ships Mainframe Disaster Recovery Solution that Restores Data in Minutes," News from EMC Corporation, EMC Corporation, Hopkinton, Mass., Oct. 3, 1994, 2 pages [EMCP 00007514–7515].
N. S. Prasad, "IBM Mainframes: Architecture and Design," McGraw–Hill Book Company, New York, N.Y., 1989, pp. 58–73 and 182–196.
"The IBM 3390 Storage Control Reference," No. GA32–0099–04, International Business Machines Corporation, Tucson, Arizona, 1991, pp. 1–304.
Patterson et al., "A Case for Redundant Arrays of Inexpensive Disks (RAID)," Report No. UCB/CSD 87/391, Computer Science Division (EECS), University of California, Berkeley, California, Dec. 1987, pp. 1–24.
Patterson et al., "Introduction to Redundant Arrays of Inexpensive Disks (RAID)," COMPCON 89 Proceedings, Feb. 27–Mar. 3, 1989, IEEE Computer Society, pp. 112–117.
Ousterhout et al., "Beating the I/O Bottleneck: A Case for Log–Structured File Systems," Operating Systems Review, vol. 23, No. 1, ACM Press, Jan., 1989, pp. 11–28.
Douglis et al., "Log Structured File Systems," COMPCON 89 Proceedings, Feb. 27–Mar. 3, 1989, IEEE Computer Society, pp. 124–129.
Rosemblum et al., "The Design and Implementation of a Log–Structured File System," ACM Transactions on Computer Systems, vol. 1, Feb. 1992, pp. 26–52.
Hank Cote—New Horizons in Accessing Large Amounts of On–Line Data, pp. 71–75, 1982.
Matt Kramer—Fault–Tolerant LANs Guard Against Malfunction, Data Loss, pp. C26–C35, Sep. 1987.
Carol Grossman—Planning for 3990 Extended Functions, pp. 245–258, 1989, 30th Annual Guide Conference.
Bob Buchanan—Administrative Error Causes Most Major System Failures (3 pgs.), Feb. 1988, Goverment Computer News, V. 17, N. 4,p. 340.
Virginia Dudek—Planning for Network Disasters (4 pgs.), Jun. 12, 1989, MIS Week, vol. 10, N. 24.
Jean Bozman—Escon An Aid To Remote Disks (3 pgs.), V. 25, N. 1,p. 29,Jan. 7, 1991.
Gary A. Boles—A RAID Stack: Micropolis RAIDION, Network Computer, Jun. 1992.
Blaine Homer—RAID Level 5 Protects Your Data With Interleaved Parity, LAN Times, May 25, 1992, vol. 9.
Michael Caton—Micropolis Array Secures Data, PC Week, 1992.
RAIDON Fault–Tolerant Disk Arrays Brochure, 1993.
Storagetek 2Q Earnings Down, Iceberg Ready for Testing by Jim Mallory, Newsbytes, Jul. 15, 1993.
Network Backup Evolves, by Michael Peterson et al., PC Magazine, vol. 12, No. 16, Sep. 28, 1993, p. 277(18).
Your Next LAN Storage Could Be a Mainframe, Jeff Moad, Datamination, vol. 39, No. 6, Mar. 15, 1993, p. 71.
Heard Any Good Rumors Lately? (Network Management), By Jill Huntington–Lee, LAN Computing, vol. 5, No. 2, Feb. 1994, p. 22.
Special Report: The AT&T Worldwide Intelligent Network-Scope, Nature and Management, Edge, vol. 7, No. 224, Nov. 6, 1992, p. 9.
Protect Your Data! (Database Report), by Michael Liczbanski, Data Based Advisor, vol. 10, No. 5, May 1992, p. 114.
Network Planning to the Rescue; Network Managers Should Design and Test a Network Recovery Plan That Lets Business Continue Uninterrupted Even If Disaster Strikes, by Ramond W. Rudnitskas et al., Networking Management, vol. 9, No. 11, Oct. 1991, p. 46.
If LANS Eye Host Status, Quality Today Falls Short, by Barbara Bochenski, Software Magazine, vol. 11, No. 12, Oct. 1991, p. 66.
Safe and Secure, by Peter Stephenson, LAN Magazine, vol. 6, No. 9, Sep. 1991, p. 34.
Firing Up Fault Tolerance by Brian O'Connell, DEC Professional, vol. 10, No. 6, Jun. 1991, p. 118.
A Which Computer? Guide to Backup Systems, by Chris Bidmead, Which Computer?, Sep. 1989, p. 62.
Optical Disks Compete With Videotape and Magnetic Storage Media, by Henry Urrows et al., Optical Information Systems, vol. 8, No. 3, May–Jun. 1988, p. 101.
Preventing Disasters: Whipping Up an Emergency Response Plan, Network Computing, Feb. 1992, p. 81.
Abbey Banking on FDDI, Communications Week International, Mar. 4, 1991, p. 22.
X.25 Data Networks and IBM: A Troublesome Connection, by Jan Johnson, Computer Decisions, vol. 19, Jan. 12, 1987, p. 16.
DSC Communications Corp. Debuts NEXOS LAN Product Line at Interface, Demos Enhanced Performance, Fault Tolerance and WAN Connectivity, News Release, Mar. 28, 1988.
Analysis of Scanning Policies For Reducing Disk Seek Times, by E. G. Coffman, L. A. Klimko and Barbara Ryan–Siam, Journal on Computing, Sep. 1972, vol. 1, No. 3, pp. 269–280.
Configuring Tandem Disk Subsystems, by Scott Sitler, Tandem Systems Review, Dec. 1986, pp. 80–91.
Technical Report Investigation of Selected Disk Systems, Oct. 1976, Teledyne Brown Engineering, Huntsville, Alabama (18 pages).

Software Extends Unix Distributed Computing, by Evan O. Grossman, PC Week, Jun. 5, 1989, p. 35 and p. 40.
IBM Funds Pack Firm, Electronic News, May 22, 1989, p. 12.
IBM Plans U.S. Test of File–Transfer, Network World, Sep. 5, 1988, pp. 15, 17.
IBM Invests In Firm That Offers Unix File–Sharing, Network World, May 22, 1989, p. 4.
IBM Plans Speedy Nationwide File System, Computer Systems News, Sep. 5, 1988, p. 56.
Design Alternatives for Disk Duplexing, by Spencer W. Ng, IBM Research Report, Jan. 30,1987.
Disk Arm Movement In Anticipation of Future Requests, by Richard P. King, IBM Research Report, Dec. 16, 1987.
Ubik: Replicated Servers Made Easy, by Michael Leon Kazar, pp. 60–67, 1989.
Carnegie–Mellon Forges Standard Look For Multivendor Net, Computerworld, Jan. 30, 1989, pp. SR/8–SR/9.
A Mutli–Media Message System For Andrew, USENIX Winter Conference, Feb. 9–12, 1988, pp. 37–42.
Synchronization and Caching Issues in the Andrew File System, USENIX Winter Conference, Feb. 9–12, 1988, pp. 27–36.
Comparative Study of Some UNIX Distributed File Systems, EUUG, Sep. 22–24, 1986, pp. 73–82.
Volumes–The Andrew File System Data Structuring Primitive, EUUG Autumn 1986, Sep. 22–24, 1986, pp. 473–480.
Unix Plays Role in Corporate Networking, MIS Week, vol. 10, No. 28, Jul. 17, 1989, pp. 22–23.
Sun's Open System Made by Marketplace, "Unlike Minis, Unix Machines, Pcs and Even VMS Can Be Glued" by NFS, Software Magazine, vol. 9, No. 12, Oct. 1989, pp. 72–75, Cashin, Jerry.
Universal Server Under Development, MacWEEK, vol. 3, No. 39, Oct. 31, 1989, p. 5.
Unix Plays Role In Corporate Networking–Vendors Look Unix–Based Network Management Tools as Networking Standards Slowly Evolve, MIS Week, Jul. 17, 1989, pp. 22–23, vol. 10, No. 28.
The 28 Runners Declared for Open Software Foundations, Distributed Computing Stakes, Computergram International, No. 1301, CGI11909912, Nov. 9, 1989.
Some Platforms (Theory of Self–Organizing Systems), Release 1.0, vol. 89, No. 6, Jun. 27, 1989, pp. 12–16.
Self–Organizing Systems (Overview of Detailed Examples of Self–Organizing Systems, Includes related article About the Importance of Self–Organizing Systems), Release 1.0, vol. 89, No. 6, Jun. 27, 1989, pp. 1–9.
IBM–Funded Startup Developing Unix Add–On, PC Week, vol. 6, No. 22, Jun. 5, 1989, p. 40.
Uniting File Systems; Experimental Large Scale, Distributed File Systems Are Now Being Created (included related article on the History of the AFS Project), UNIX Review, vol. 7, No. 3, Mar. 1989, pp. 61–70.
IBM Backs Transarc, Formed to Offer Andrew File System Distributed Unix Database, Computergram International, No. 1180, CGI05190001, May 19, 1989.
A Comparative Analysis of Disk Scheduling Policies, by Toby J. Reorey and Tad B. Pinerton, Communications of the ACM, Mar. 1972, vol. 15, No. 3, pp. 177–184.
Disk Scheduling: FCFS vs. SSTF Revisited, by Micha Hofri, Communications of the ACM, Nov. 1980, vol. 23, No. 11, pp. 645–653.
Using Multiple Replica Classes to Improve Performance in Distributed System, by Peter Triantafillou and David Tayloer, The 11th International Conference on Distributed Computing Systems, May 20–24, 1991, pp. 420–428.
Government Computer News, Oct. 9, 1987, Richard. A. Damca, Microcomputing"Patch Fault Tolerance: A Strong Second Team," vol. 7, Issue 149 P27(2), Dec. 17, 1990.
Computer Reseller, Feb. 19, 1990, Joel Shore, *Mirrored Servers' a reality,* pp. 51, 52, 62.
Infoworld Articles, Mar. 12, 1990, *Vendors Offer Mirroring Solutions* P(31).
Wilkinson, Compact and Novell team for fault tolerance: mirrored servers to cut down on costly downtime, Article MIS Week, vol. 11, Issue 7, Feb. 12, 1990.
Article PC Week, vol. 4, Issue 37, Sep. 15, 1987, Matt Kramer, *Fault–Tolerant LANS Guard Against Malfunction, Data Loss.*
"The DASD Time Bomb," Datamation, vol. 32, Mar. 1, 1986, P63(4), Alper, Alan.

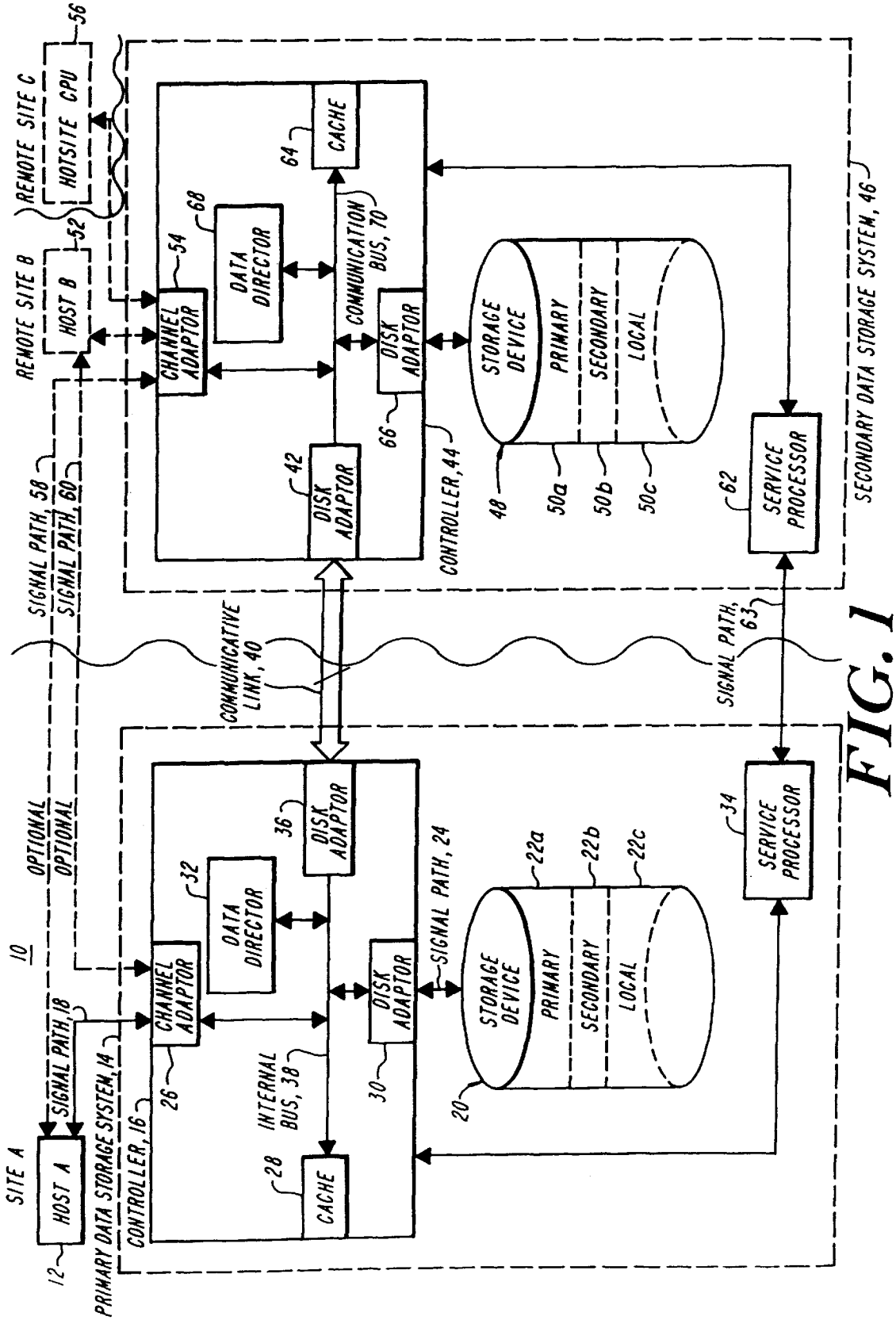
10
SITE A
HOST A
12
SIGNAL PATH, 18
SIGNAL PATH, 14
PRIMARY DATA STORAGE SYSTEM, 16
CONTROLLER, 16
CHANNEL ADAPTOR
26
DATA DIRECTOR
32
DISK ADAPTOR
36
INTERNAL BUS, 38
CACHE
28
DISK ADAPTOR
30
SIGNAL PATH, 24
STORAGE DEVICE
20
PRIMARY
SECONDARY
LOCAL
22a
22b
22c
SERVICE PROCESSOR
34
OPTIONAL
OPTIONAL
COMMUNICATIVE LINK, 40
SIGNAL PATH, 58
SIGNAL PATH, 60
SIGNAL PATH, 63
REMOTE SITE B
HOST B
52
REMOTE SITE C
HOTSITE CPU
56
CHANNEL ADAPTOR
54
DATA DIRECTOR
68
CACHE
64
COMMUNICATION BUS, 70
DISK ADAPTOR
66
DISK ADAPTOR
42
CONTROLLER, 44
STORAGE DEVICE
48
PRIMARY
SECONDARY
LOCAL
50a
50b
50c
SERVICE PROCESSOR
62
SECONDARY DATA STORAGE SYSTEM, 46

FIG. 1

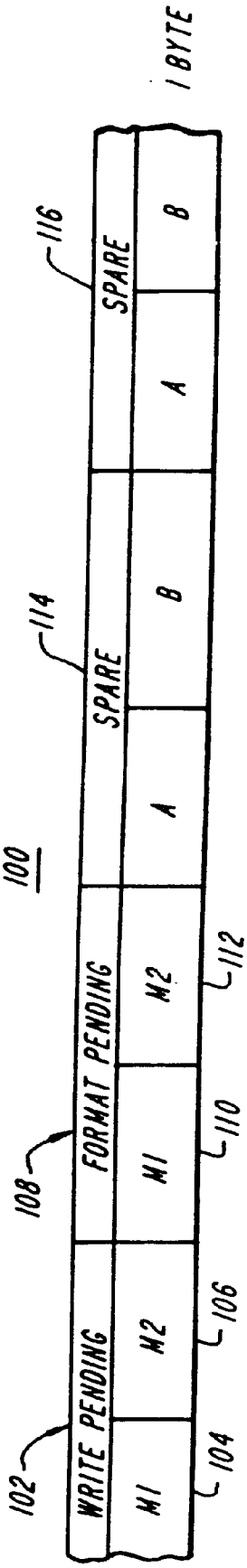
100
1 BYTE
WRITE PENDING
FORMAT PENDING
SPARE
SPARE
M1
M2
M1
M2
A
B
A
B
102
104
106
108
110
112
114
116

FIG. 2

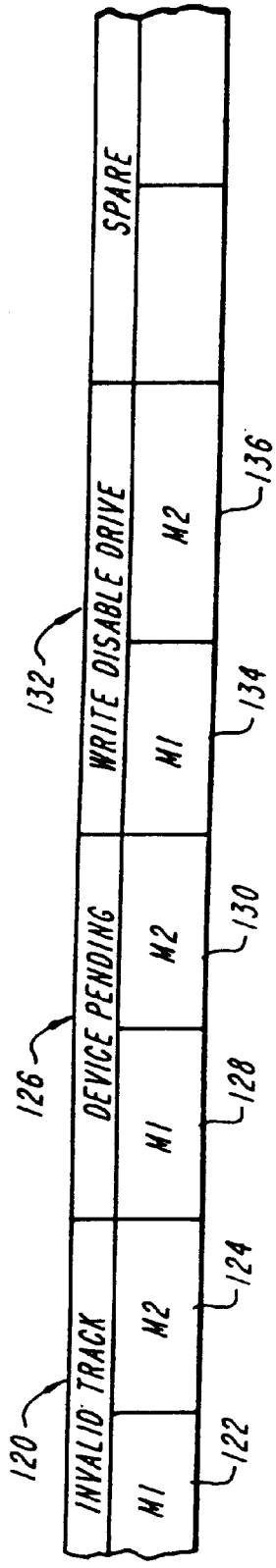
INVALID TRACK
DEVICE PENDING
WRITE DISABLE DRIVE
SPARE
M1
M2
M1
M2
M1
M2
120
122
124
126
128
130
132
134
136

FIG. 3

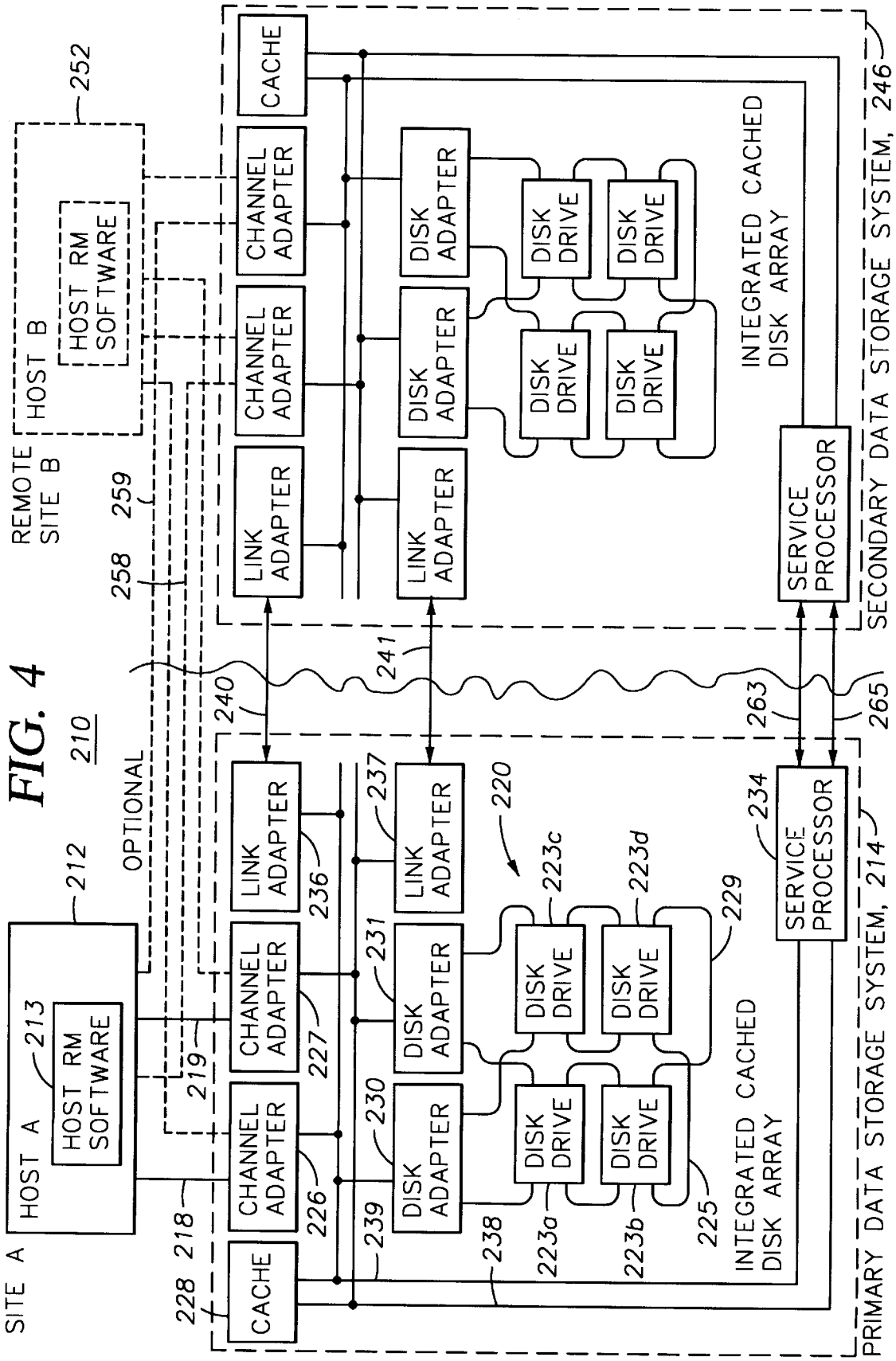
SITE A
HOST A
HOST RM SOFTWARE
212
213
OPTIONAL
REMOTE SITE B
HOST B
HOST RM SOFTWARE
252
CACHE
CHANNEL ADAPTER
CHANNEL ADAPTER
LINK ADAPTER
DISK ADAPTER
DISK ADAPTER
LINK ADAPTER
DISK DRIVE
DISK DRIVE
DISK DRIVE
DISK DRIVE
INTEGRATED CACHED DISK ARRAY
SERVICE PROCESSOR
SECONDARY DATA STORAGE SYSTEM, 246
CACHE
CHANNEL ADAPTER
CHANNEL ADAPTER
LINK ADAPTER
DISK ADAPTER
DISK ADAPTER
LINK ADAPTER
DISK DRIVE
DISK DRIVE
DISK DRIVE
DISK DRIVE
INTEGRATED CACHED DISK ARRAY
SERVICE PROCESSOR
PRIMARY DATA STORAGE SYSTEM, 214
218
219
226
227
228
230
231
236
237
238
239
240
241
258
259
263
265
220
223a
223b
223c
223d
225
229
234

FIG. 4

210

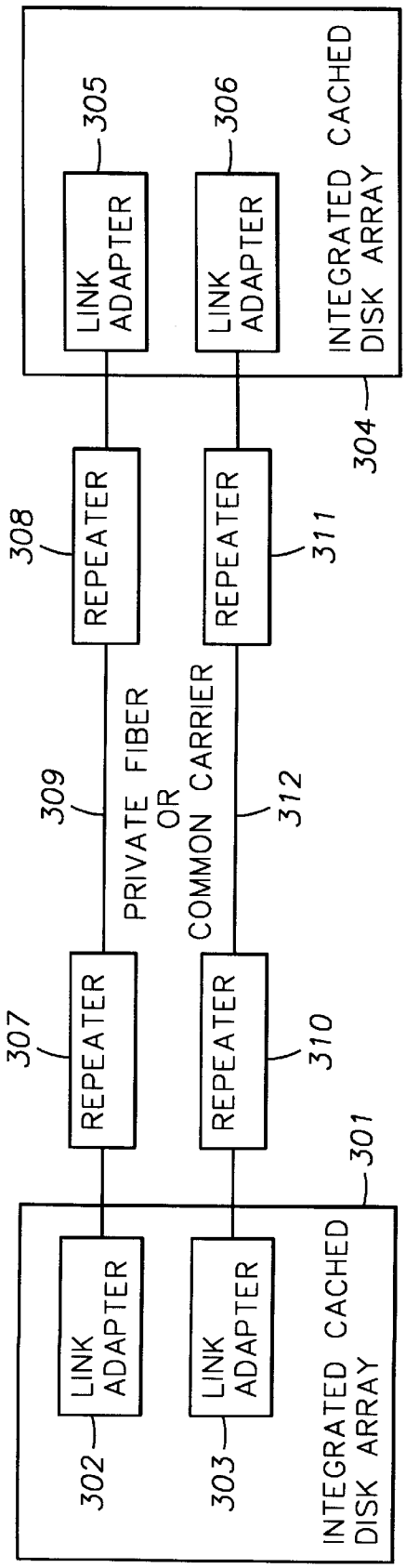
LINK ADAPTER
305
LINK ADAPTER
306
INTEGRATED CACHED DISK ARRAY
304
REPEATER
308
REPEATER
311
309
PRIVATE FIBER OR COMMON CARRIER
312
REPEATER
307
REPEATER
310
301
LINK ADAPTER
302
LINK ADAPTER
303
INTEGRATED CACHED DISK ARRAY

FIG. 5

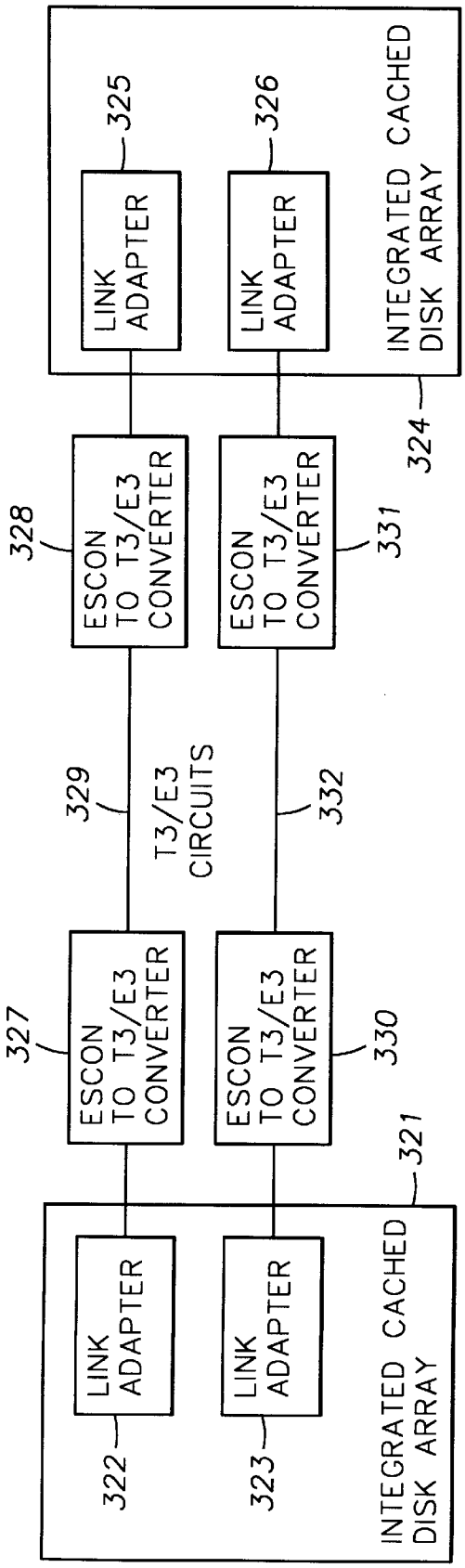
LINK ADAPTER
325
LINK ADAPTER
326
INTEGRATED CACHED DISK ARRAY
324
ESCON TO T3/E3 CONVERTER
328
ESCON TO T3/E3 CONVERTER
331
329
T3/E3 CIRCUITS
332
ESCON TO T3/E3 CONVERTER
327
ESCON TO T3/E3 CONVERTER
330
321
LINK ADAPTER
322
LINK ADAPTER
323
INTEGRATED CACHED DISK ARRAY

FIG. 6

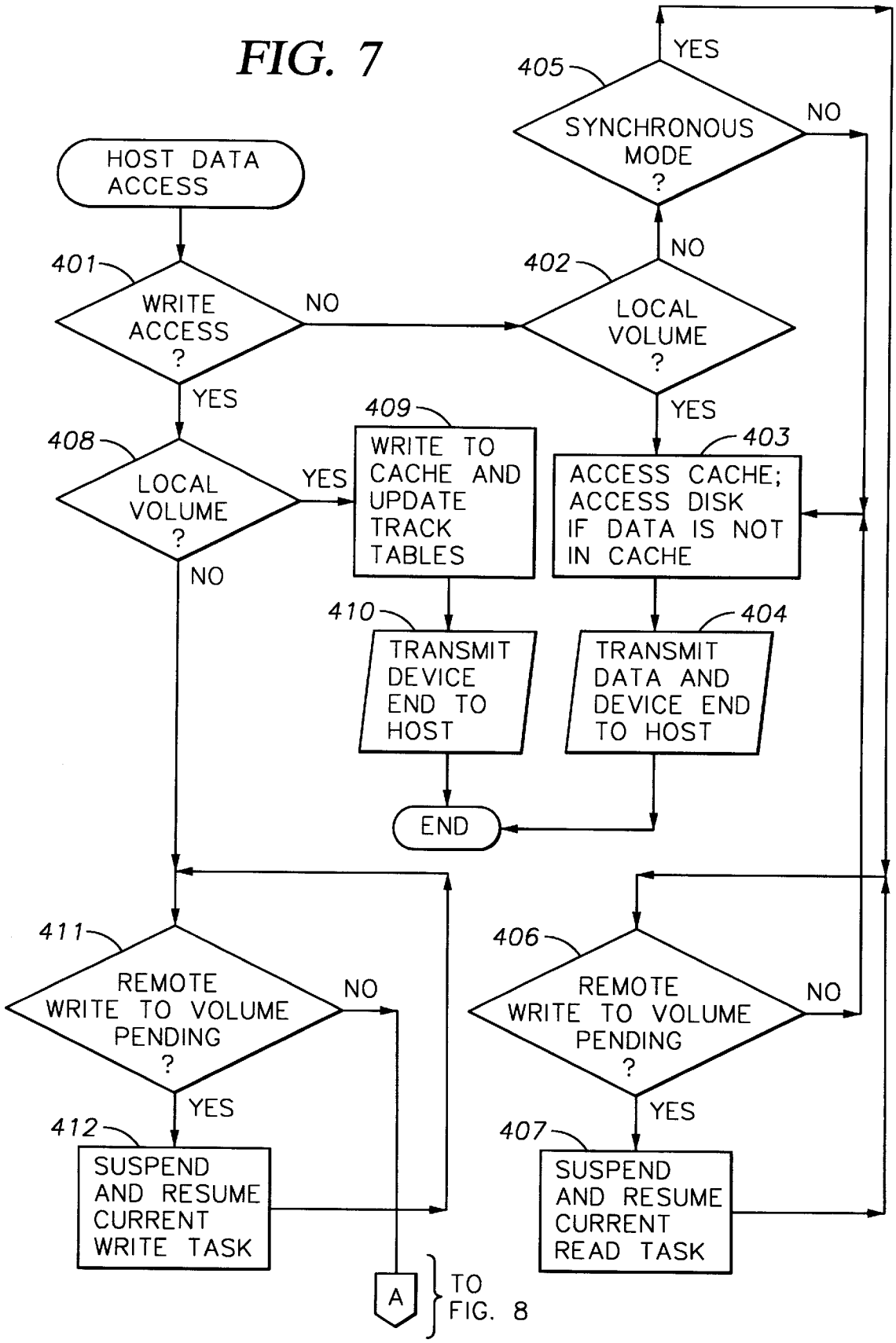
FIG. 7
HOST DATA ACCESS
401
WRITE ACCESS ?
NO
YES
402
LOCAL VOLUME ?
NO
YES
405
SYNCHRONOUS MODE ?
YES
NO
408
LOCAL VOLUME ?
YES
NO
409
WRITE TO CACHE AND UPDATE TRACK TABLES
403
ACCESS CACHE; ACCESS DISK IF DATA IS NOT IN CACHE
410
TRANSMIT DEVICE END TO HOST
404
TRANSMIT DATA AND DEVICE END TO HOST
END
411
REMOTE WRITE TO VOLUME PENDING ?
NO
YES
412
SUSPEND AND RESUME CURRENT WRITE TASK
406
REMOTE WRITE TO VOLUME PENDING ?
NO
YES
407
SUSPEND AND RESUME CURRENT READ TASK
A
TO FIG. 8

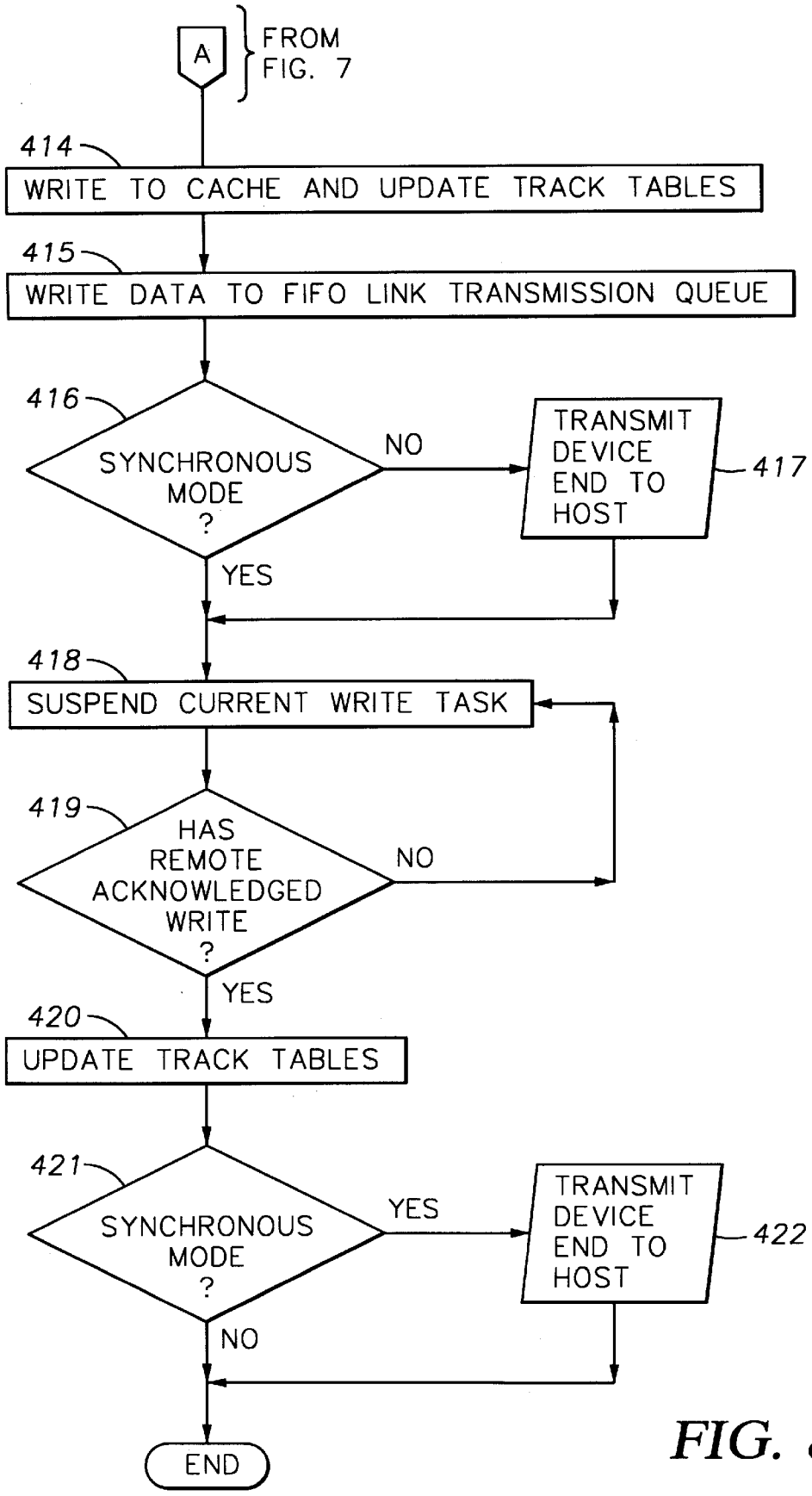
A
FROM FIG. 7
414
WRITE TO CACHE AND UPDATE TRACK TABLES
415
WRITE DATA TO FIFO LINK TRANSMISSION QUEUE
416
SYNCHRONOUS MODE ?
NO
TRANSMIT DEVICE END TO HOST
417
YES
418
SUSPEND CURRENT WRITE TASK
419
HAS REMOTE ACKNOWLEDGED WRITE ?
NO
YES
420
UPDATE TRACK TABLES
421
SYNCHRONOUS MODE ?
YES
TRANSMIT DEVICE END TO HOST
422
NO
END

FIG. 8

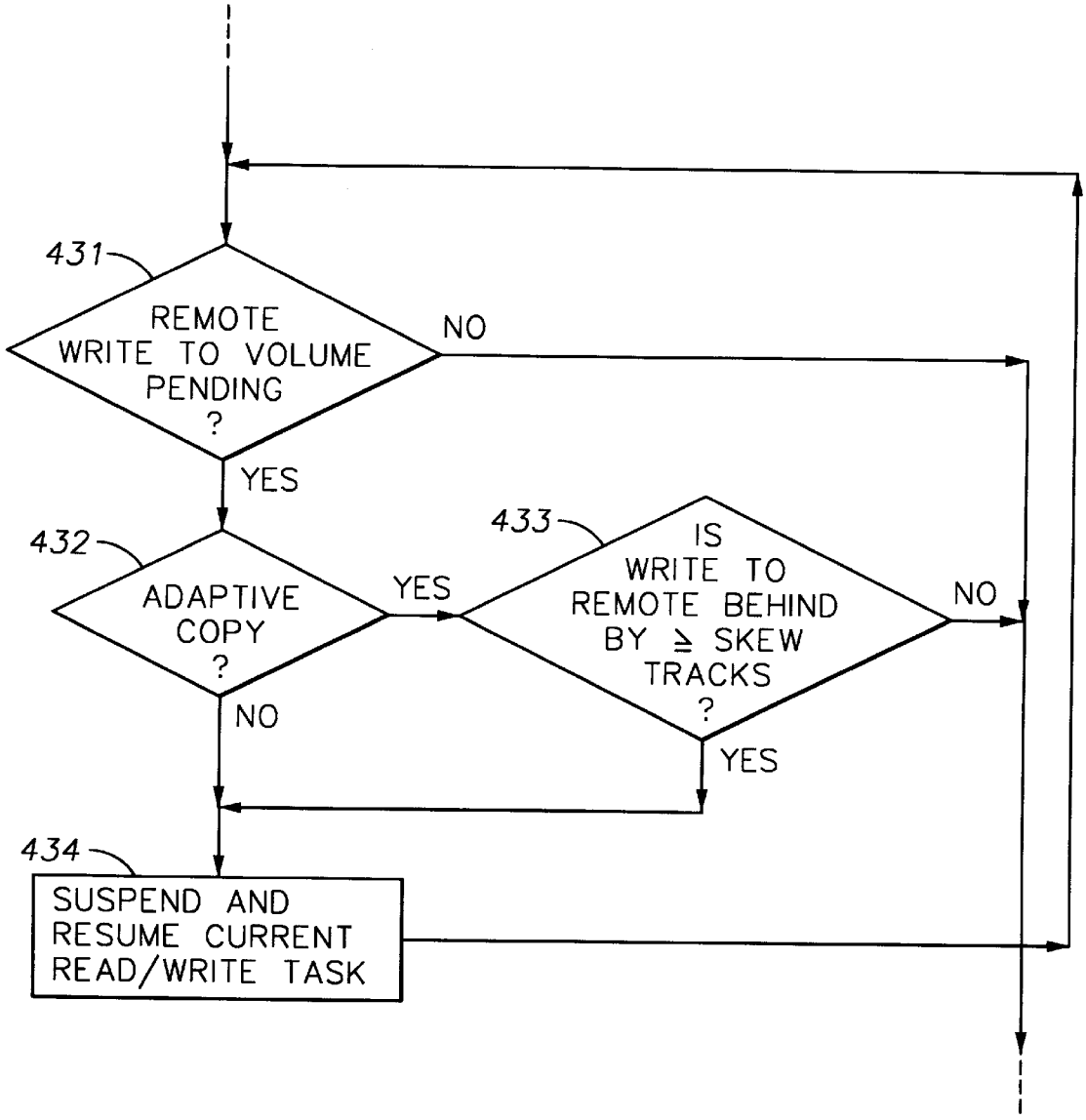
431
REMOTE WRITE TO VOLUME PENDING ?
NO
YES
432
ADAPTIVE COPY ?
YES
433
IS WRITE TO REMOTE BEHIND BY ≥ SKEW TRACKS ?
NO
NO
YES
434
SUSPEND AND RESUME CURRENT READ/WRITE TASK

FIG. 9

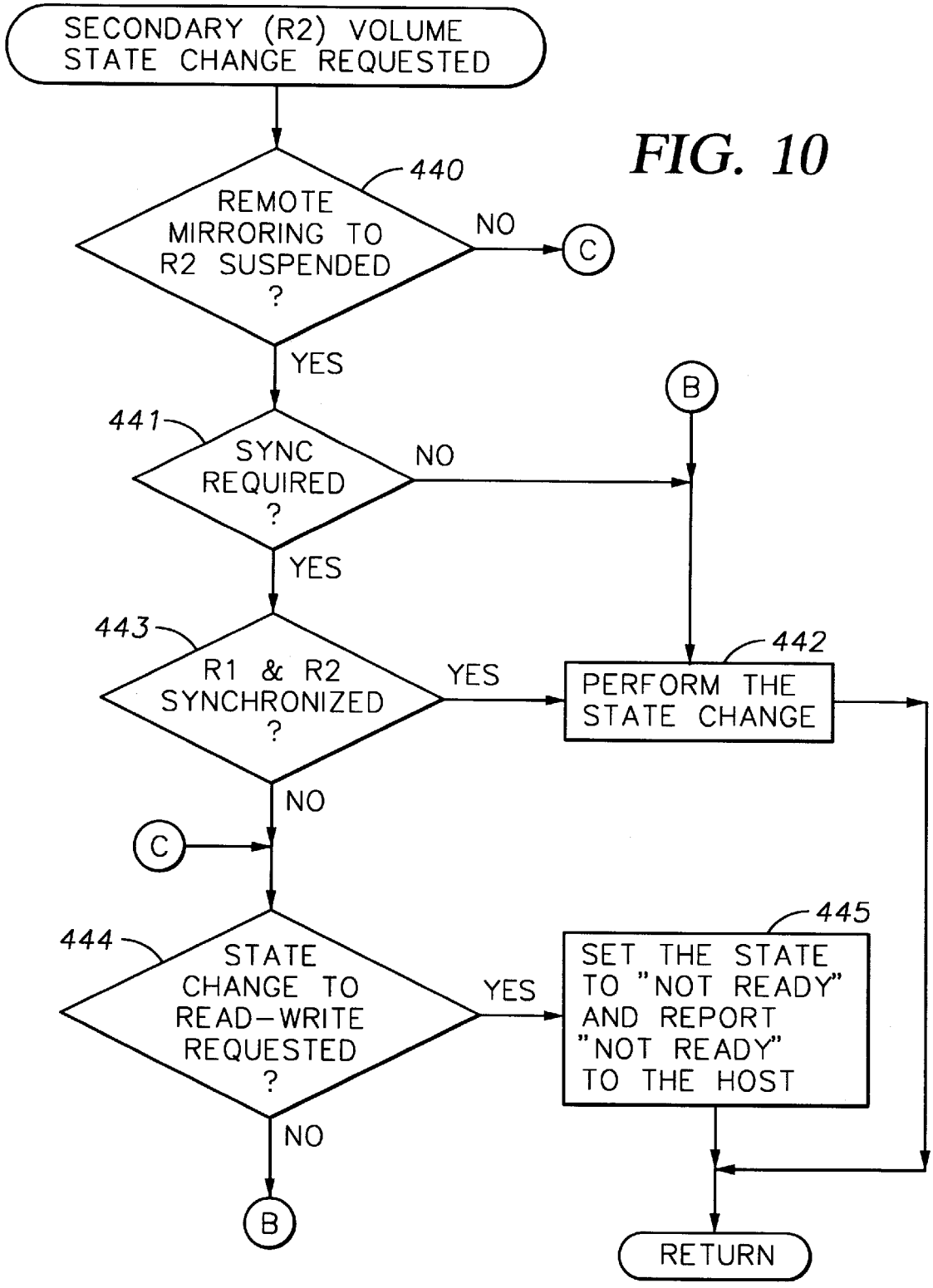
SECONDARY (R2) VOLUME STATE CHANGE REQUESTED
440
REMOTE MIRRORING TO R2 SUSPENDED ?
NO
C
YES
B
441
SYNC REQUIRED ?
NO
YES
443
R1 & R2 SYNCHRONIZED ?
YES
442
PERFORM THE STATE CHANGE
NO
C
444
STATE CHANGE TO READ-WRITE REQUESTED ?
YES
445
SET THE STATE TO "NOT READY" AND REPORT "NOT READY" TO THE HOST
NO
B
RETURN

FIG. 10

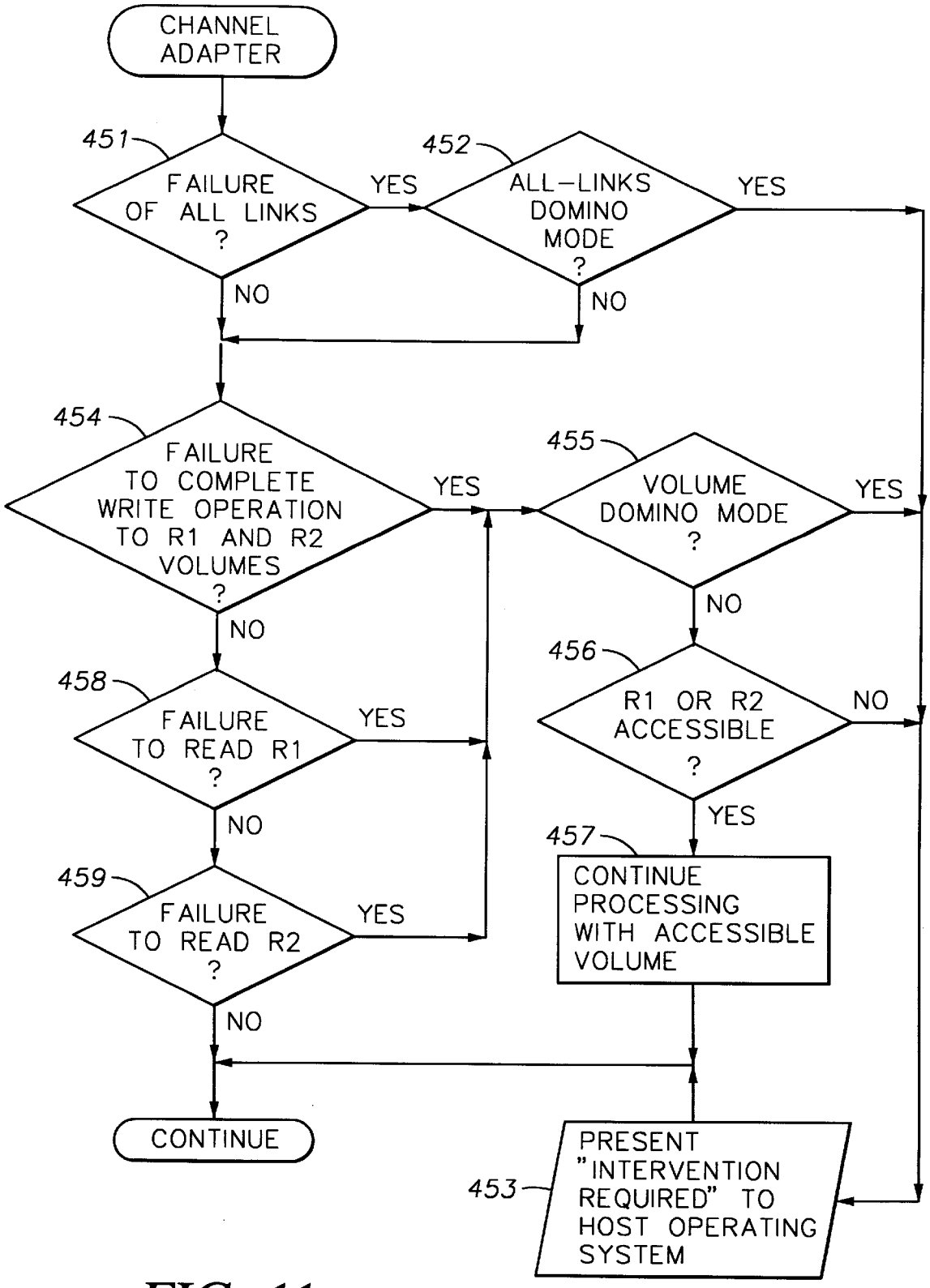
CHANNEL ADAPTER
451
FAILURE OF ALL LINKS ?
YES
NO
452
ALL-LINKS DOMINO MODE ?
YES
NO
454
FAILURE TO COMPLETE WRITE OPERATION TO R1 AND R2 VOLUMES ?
YES
NO
455
VOLUME DOMINO MODE ?
YES
NO
456
R1 OR R2 ACCESSIBLE ?
NO
YES
457
CONTINUE PROCESSING WITH ACCESSIBLE VOLUME
458
FAILURE TO READ R1 ?
YES
NO
459
FAILURE TO READ R2 ?
YES
NO
CONTINUE
453
PRESENT "INTERVENTION REQUIRED" TO HOST OPERATING SYSTEM

FIG. 11

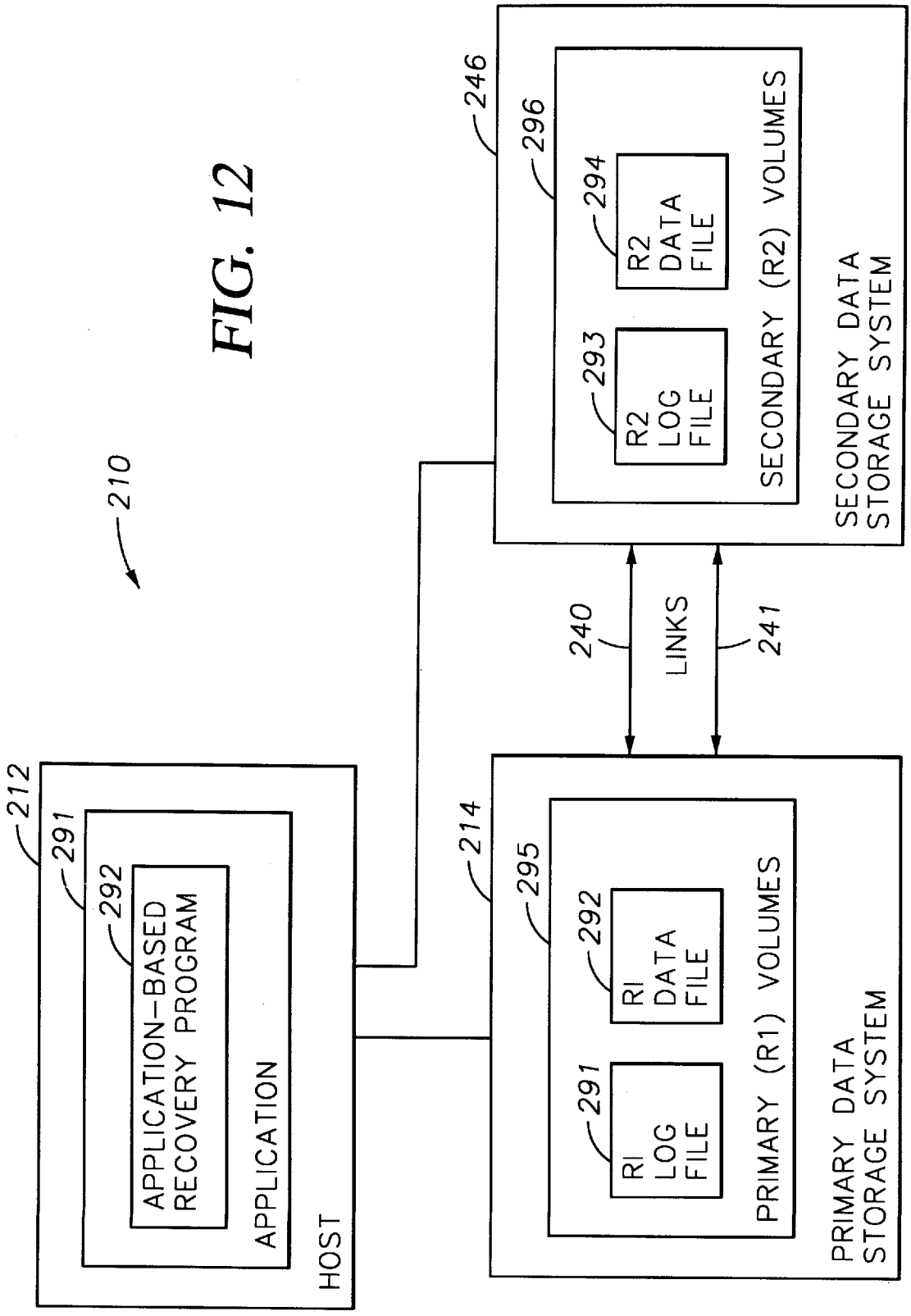
210
212
291
292
APPLICATION-BASED RECOVERY PROGRAM
APPLICATION
HOST
214
295
291
R1 LOG FILE
292
R1 DATA FILE
PRIMARY (R1) VOLUMES
PRIMARY DATA STORAGE SYSTEM
240
LINKS
241
246
296
293
R2 LOG FILE
294
R2 DATA FILE
SECONDARY (R2) VOLUMES
SECONDARY DATA STORAGE SYSTEM

FIG. 12

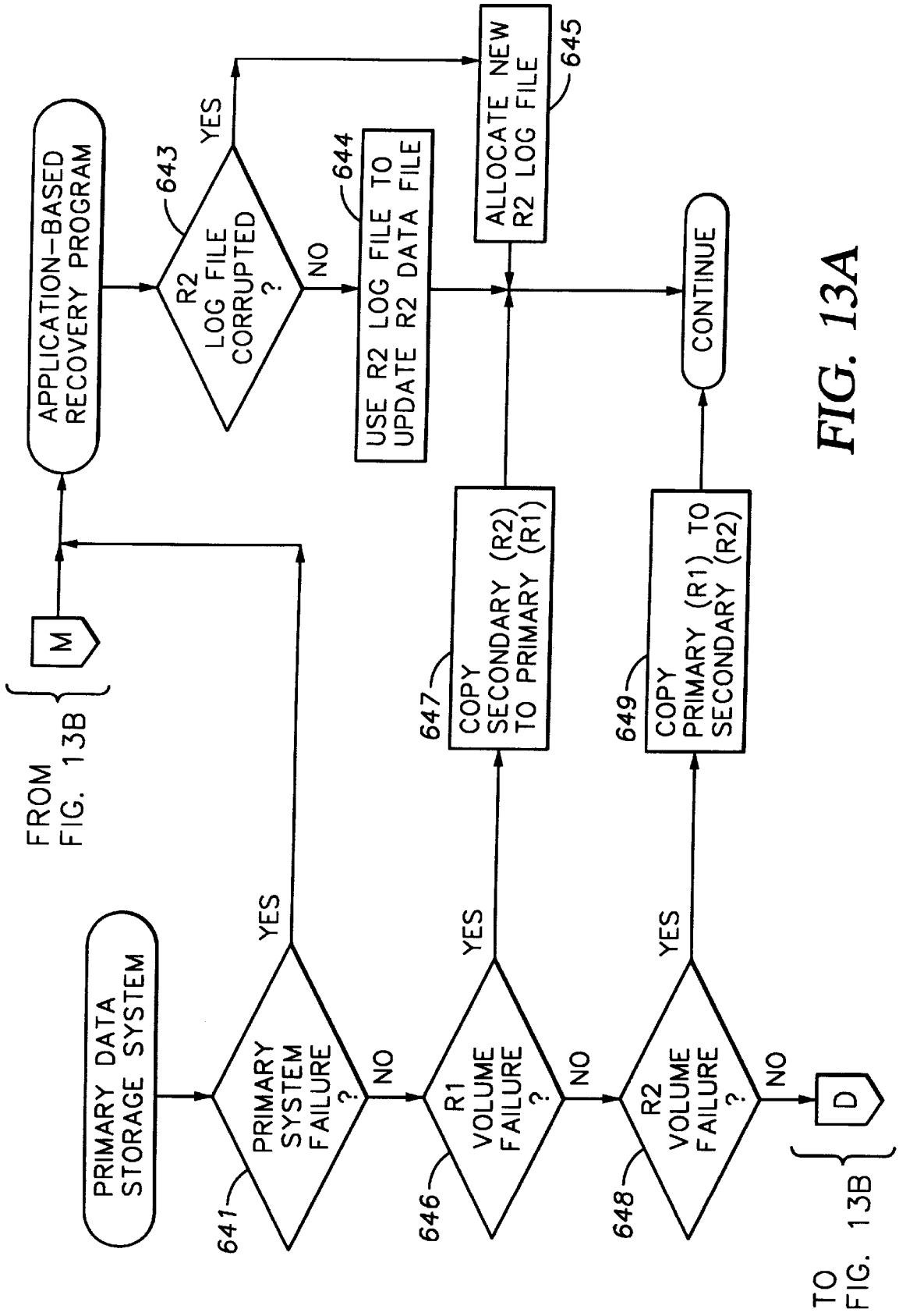
FROM FIG. 13B
M
APPLICATION-BASED RECOVERY PROGRAM
PRIMARY DATA STORAGE SYSTEM
641
PRIMARY SYSTEM FAILURE ?
YES
NO
643
R2 LOG FILE CORRUPTED ?
YES
NO
644
USE R2 LOG FILE TO UPDATE R2 DATA FILE
645
ALLOCATE NEW R2 LOG FILE
646
R1 VOLUME FAILURE ?
YES
NO
647
COPY SECONDARY (R2) TO PRIMARY (R1)
648
R2 VOLUME FAILURE ?
YES
NO
649
COPY PRIMARY (R1) TO SECONDARY (R2)
CONTINUE
D
TO FIG. 13B

FIG. 13A

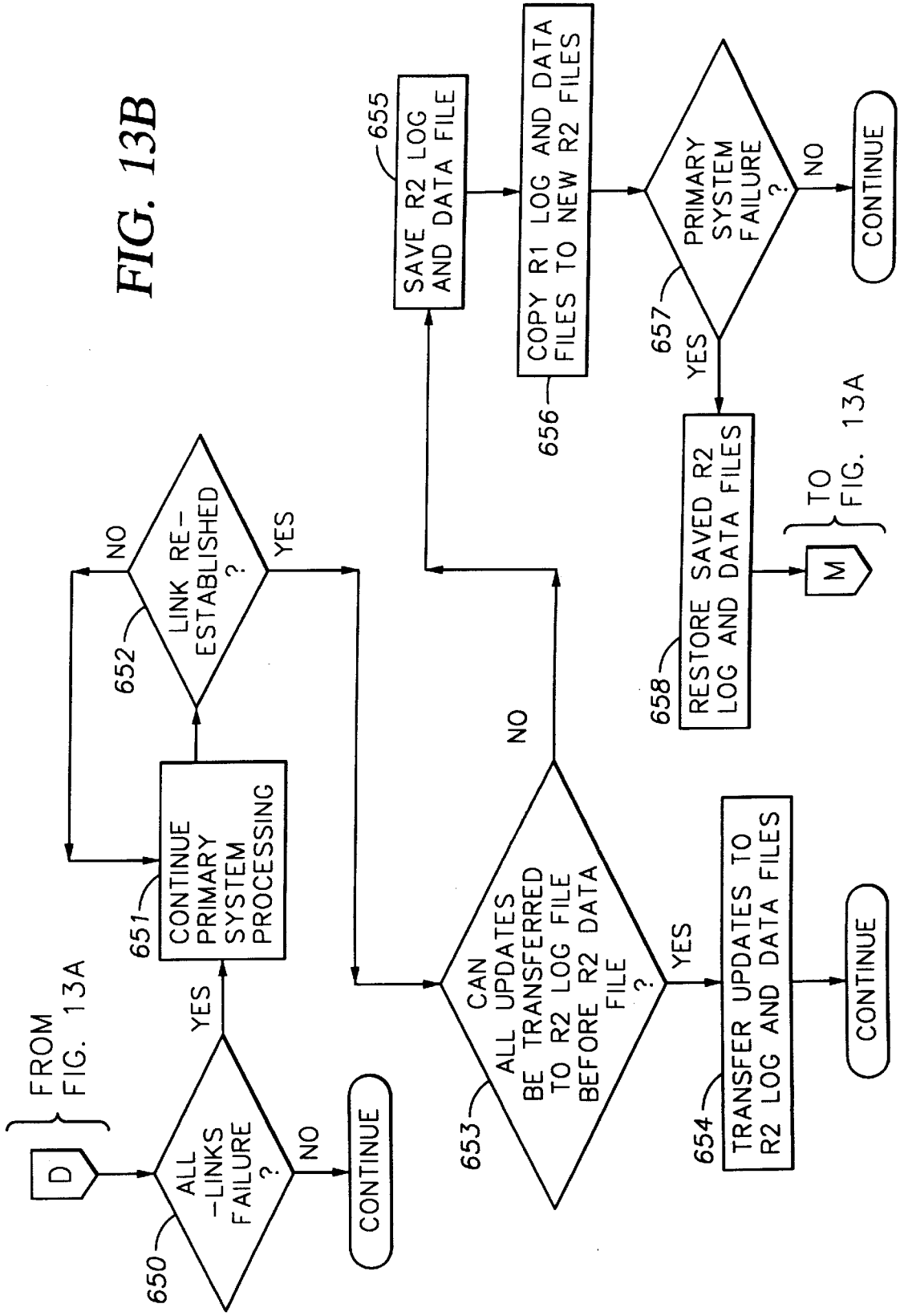
FIG. 13B
FROM FIG. 13A
D
650
ALL -LINKS FAILURE ?
YES
NO
CONTINUE
651
CONTINUE PRIMARY SYSTEM PROCESSING
652
LINK RE-ESTABLISHED ?
NO
YES
653
CAN ALL UPDATES BE TRANSFERRED TO R2 LOG FILE BEFORE R2 DATA FILE ?
NO
YES
654
TRANSFER UPDATES TO R2 LOG AND DATA FILES
CONTINUE
655
SAVE R2 LOG AND DATA FILE
656
COPY R1 LOG AND DATA FILES TO NEW R2 FILES
657
PRIMARY SYSTEM FAILURE ?
NO
CONTINUE
YES
658
RESTORE SAVED R2 LOG AND DATA FILES
M
TO FIG. 13A

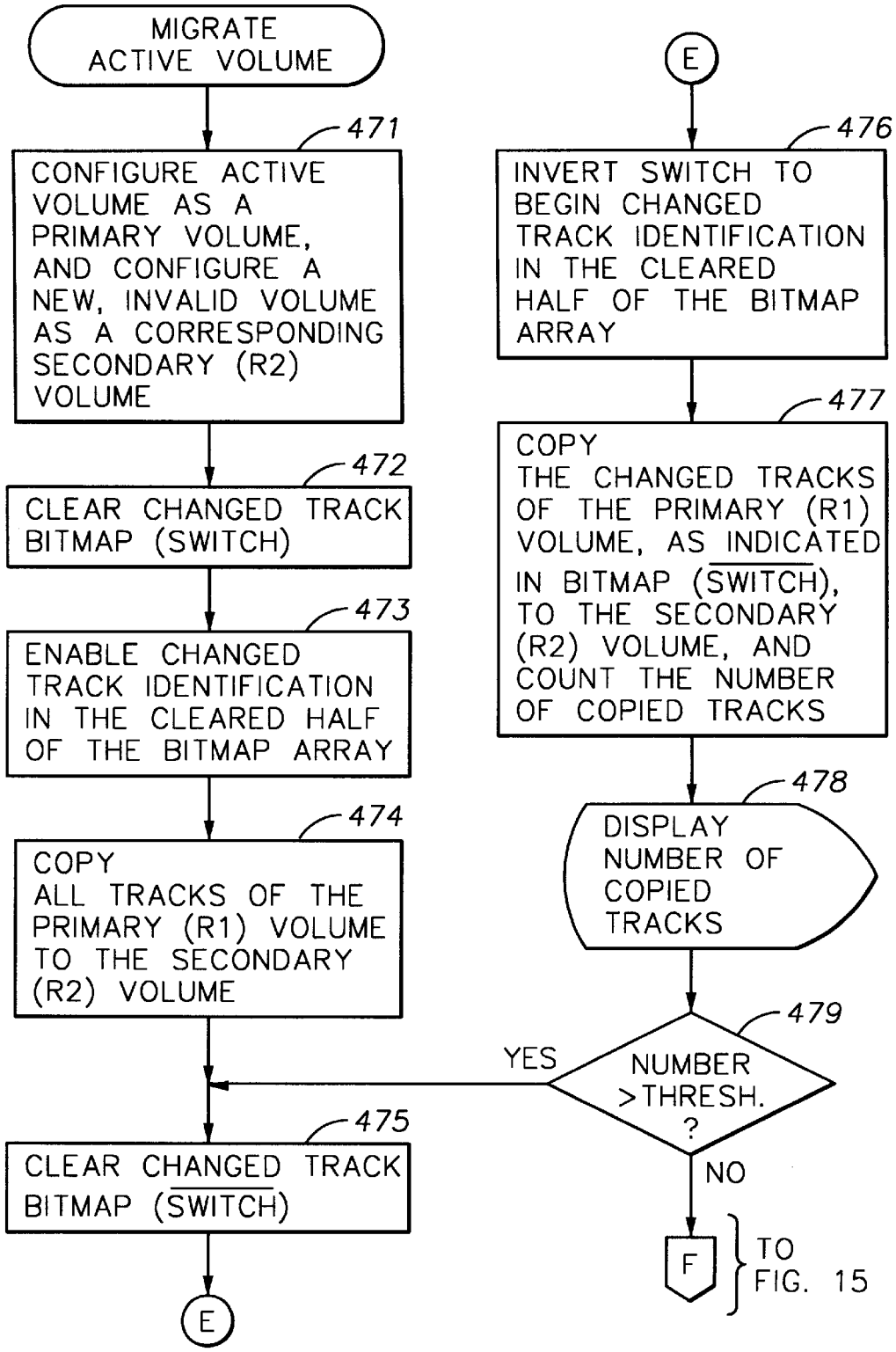
MIGRATE ACTIVE VOLUME
471
CONFIGURE ACTIVE VOLUME AS A PRIMARY VOLUME, AND CONFIGURE A NEW, INVALID VOLUME AS A CORRESPONDING SECONDARY (R2) VOLUME
472
CLEAR CHANGED TRACK BITMAP (SWITCH)
473
ENABLE CHANGED TRACK IDENTIFICATION IN THE CLEARED HALF OF THE BITMAP ARRAY
474
COPY ALL TRACKS OF THE PRIMARY (R1) VOLUME TO THE SECONDARY (R2) VOLUME
475
CLEAR CHANGED TRACK BITMAP (SWITCH)
E
E
476
INVERT SWITCH TO BEGIN CHANGED TRACK IDENTIFICATION IN THE CLEARED HALF OF THE BITMAP ARRAY
477
COPY THE CHANGED TRACKS OF THE PRIMARY (R1) VOLUME, AS INDICATED IN BITMAP (SWITCH), TO THE SECONDARY (R2) VOLUME, AND COUNT THE NUMBER OF COPIED TRACKS
478
DISPLAY NUMBER OF COPIED TRACKS
479
NUMBER >THRESH. ?
YES
NO
F
TO FIG. 15

FIG. 14

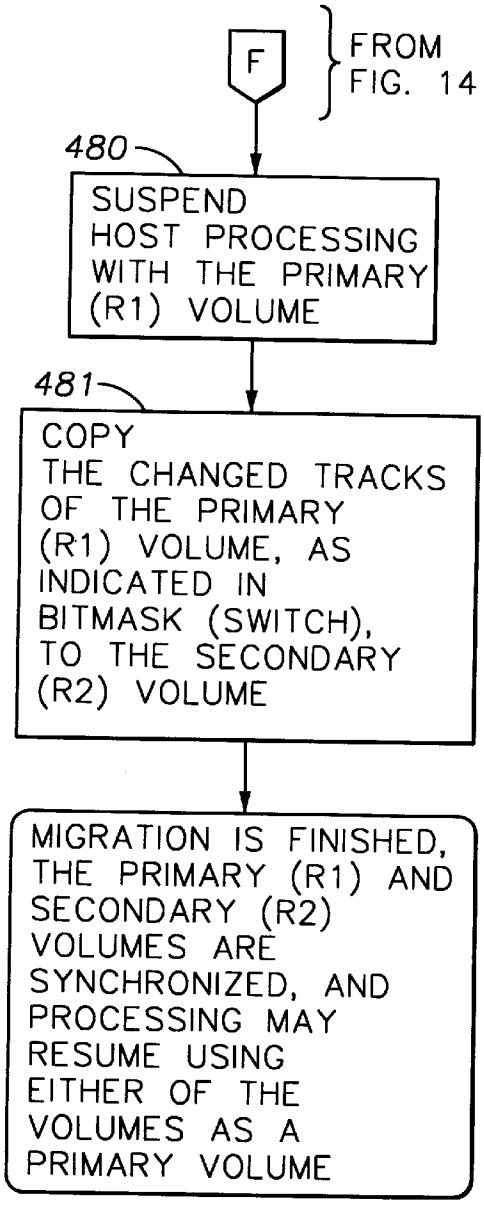
F
FROM FIG. 14
480
SUSPEND HOST PROCESSING WITH THE PRIMARY (R1) VOLUME
481
COPY THE CHANGED TRACKS OF THE PRIMARY (R1) VOLUME, AS INDICATED IN BITMASK (SWITCH), TO THE SECONDARY (R2) VOLUME
MIGRATION IS FINISHED, THE PRIMARY (R1) AND SECONDARY (R2) VOLUMES ARE SYNCHRONIZED, AND PROCESSING MAY RESUME USING EITHER OF THE VOLUMES AS A PRIMARY VOLUME

FIG. 15

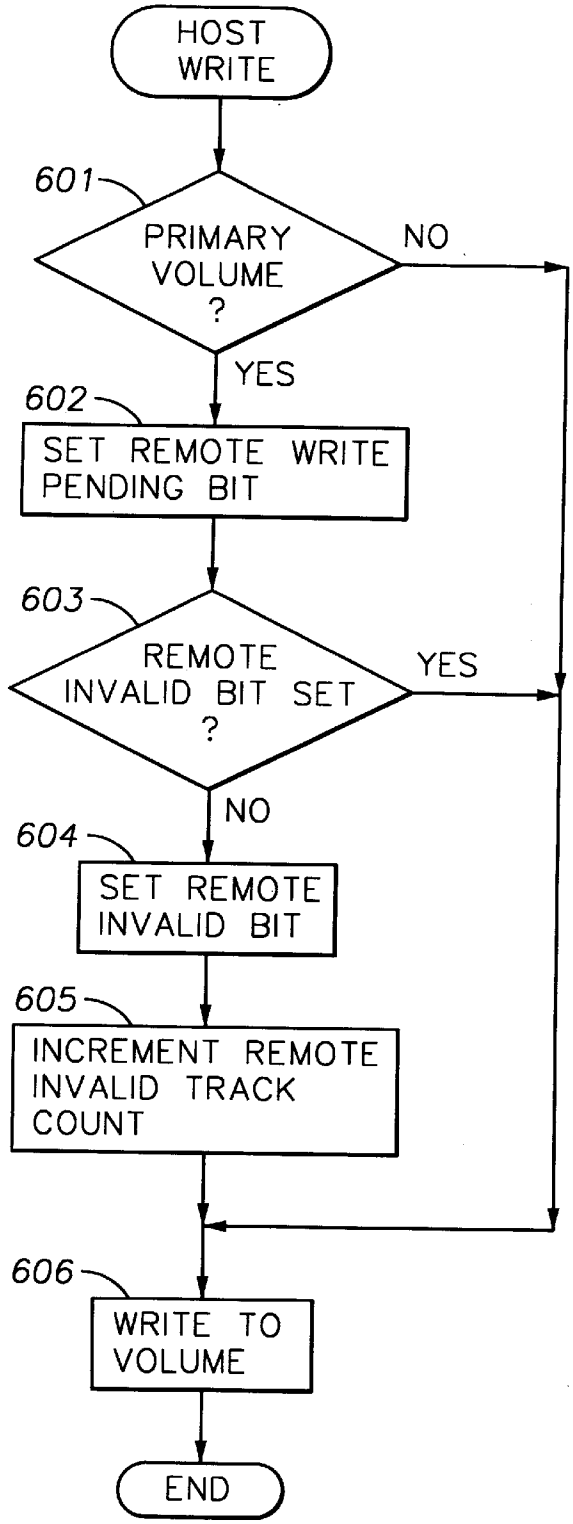
HOST WRITE
601
PRIMARY VOLUME ?
NO
YES
602
SET REMOTE WRITE PENDING BIT
603
REMOTE INVALID BIT SET ?
YES
NO
604
SET REMOTE INVALID BIT
605
INCREMENT REMOTE INVALID TRACK COUNT
606
WRITE TO VOLUME
END

FIG. 16

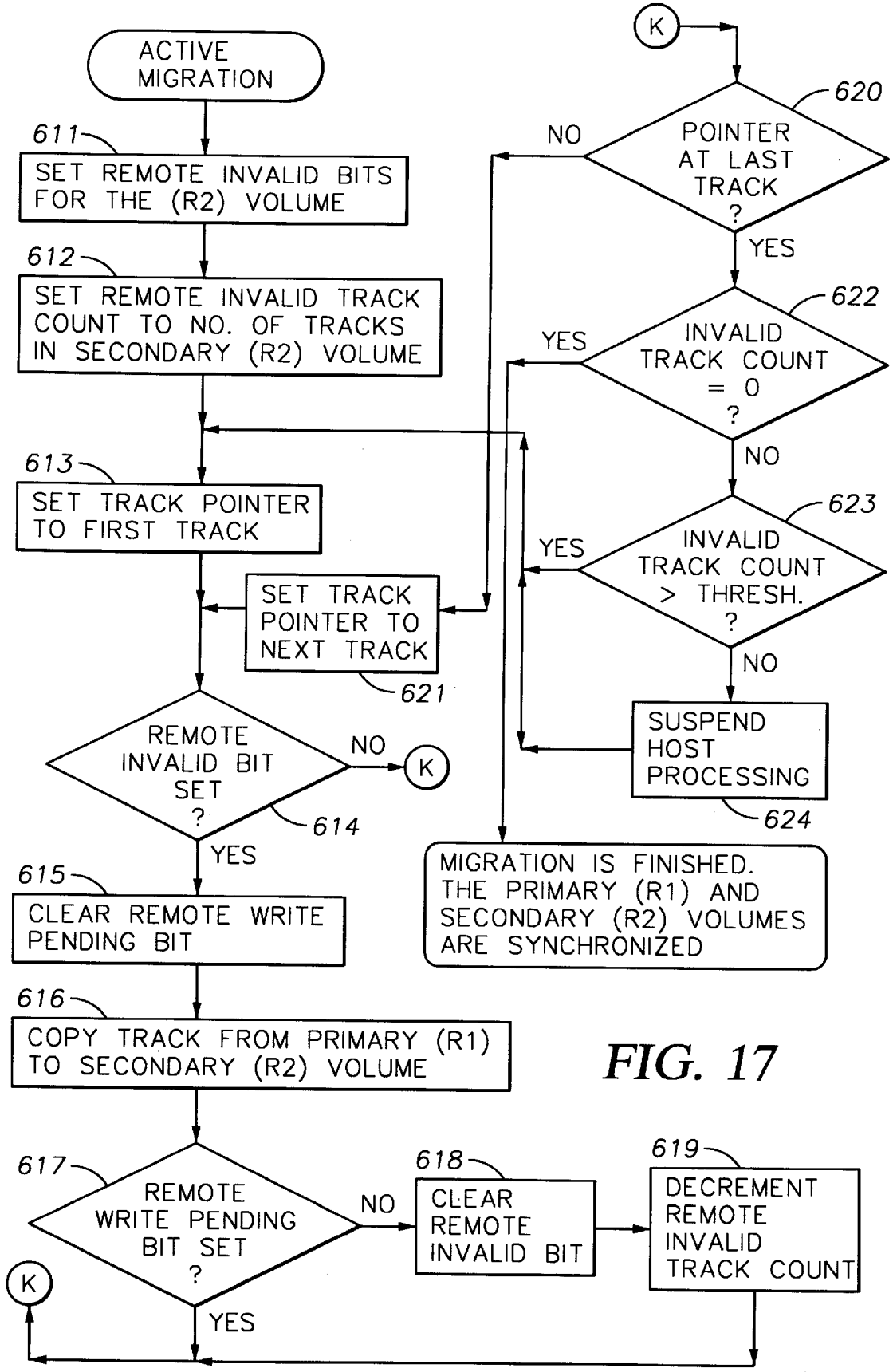
ACTIVE MIGRATION
611
SET REMOTE INVALID BITS FOR THE (R2) VOLUME
612
SET REMOTE INVALID TRACK COUNT TO NO. OF TRACKS IN SECONDARY (R2) VOLUME
613
SET TRACK POINTER TO FIRST TRACK
SET TRACK POINTER TO NEXT TRACK
621
REMOTE INVALID BIT SET ?
614
NO
K
YES
615
CLEAR REMOTE WRITE PENDING BIT
616
COPY TRACK FROM PRIMARY (R1) TO SECONDARY (R2) VOLUME
617
REMOTE WRITE PENDING BIT SET ?
NO
YES
K
618
CLEAR REMOTE INVALID BIT
619
DECREMENT REMOTE INVALID TRACK COUNT
K
620
POINTER AT LAST TRACK ?
NO
YES
622
INVALID TRACK COUNT = 0 ?
YES
NO
623
INVALID TRACK COUNT > THRESH. ?
YES
NO
SUSPEND HOST PROCESSING
624
MIGRATION IS FINISHED. THE PRIMARY (R1) AND SECONDARY (R2) VOLUMES ARE SYNCHRONIZED

FIG. 17

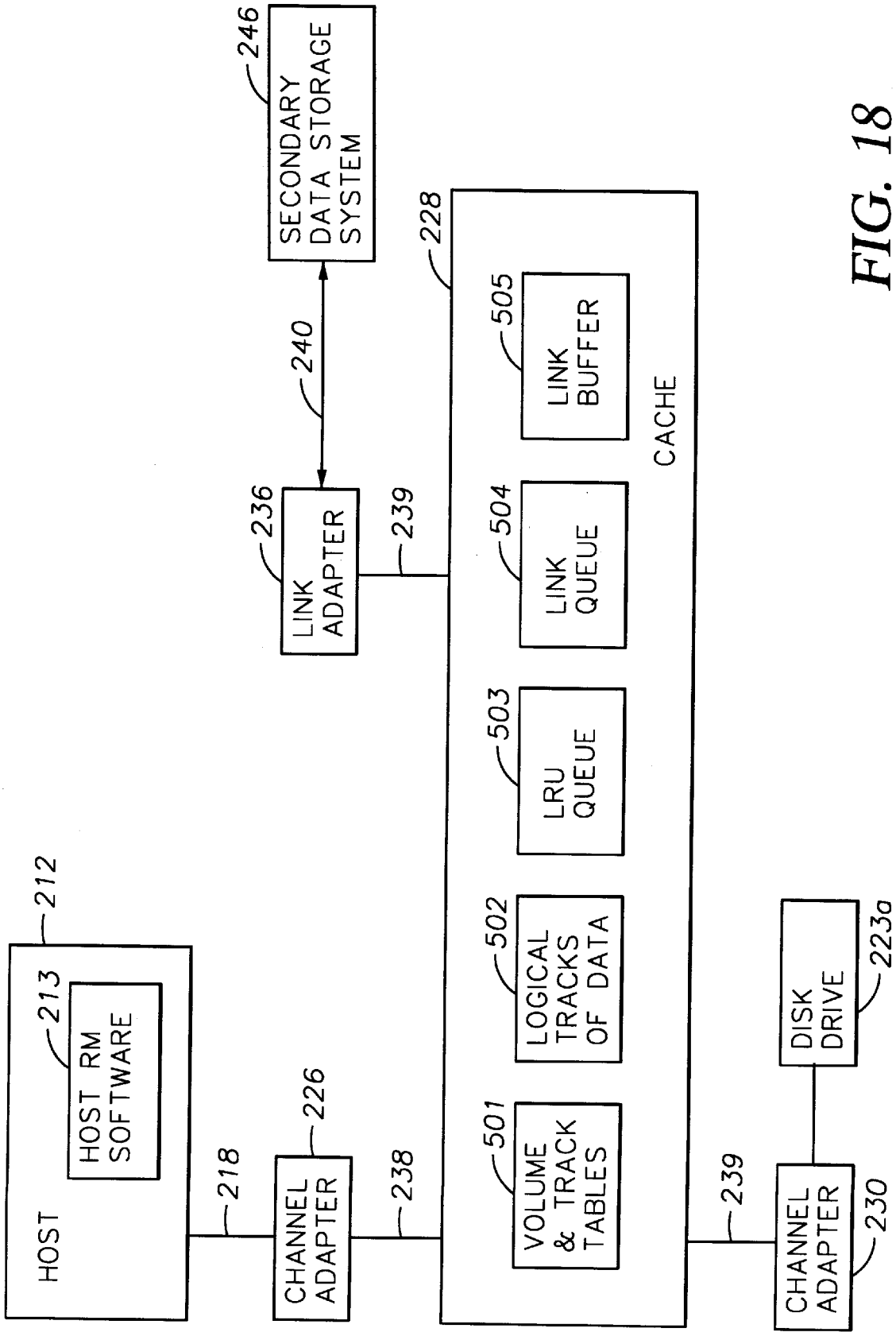
HOST
212
HOST RM SOFTWARE
213
218
CHANNEL ADAPTER
226
238
VOLUME & TRACK TABLES
501
LOGICAL TRACKS OF DATA
502
LRU QUEUE
503
LINK QUEUE
504
LINK BUFFER
505
CACHE
228
239
LINK ADAPTER
236
240
SECONDARY DATA STORAGE SYSTEM
246
239
CHANNEL ADAPTER
230
DISK DRIVE
223a

FIG. 18

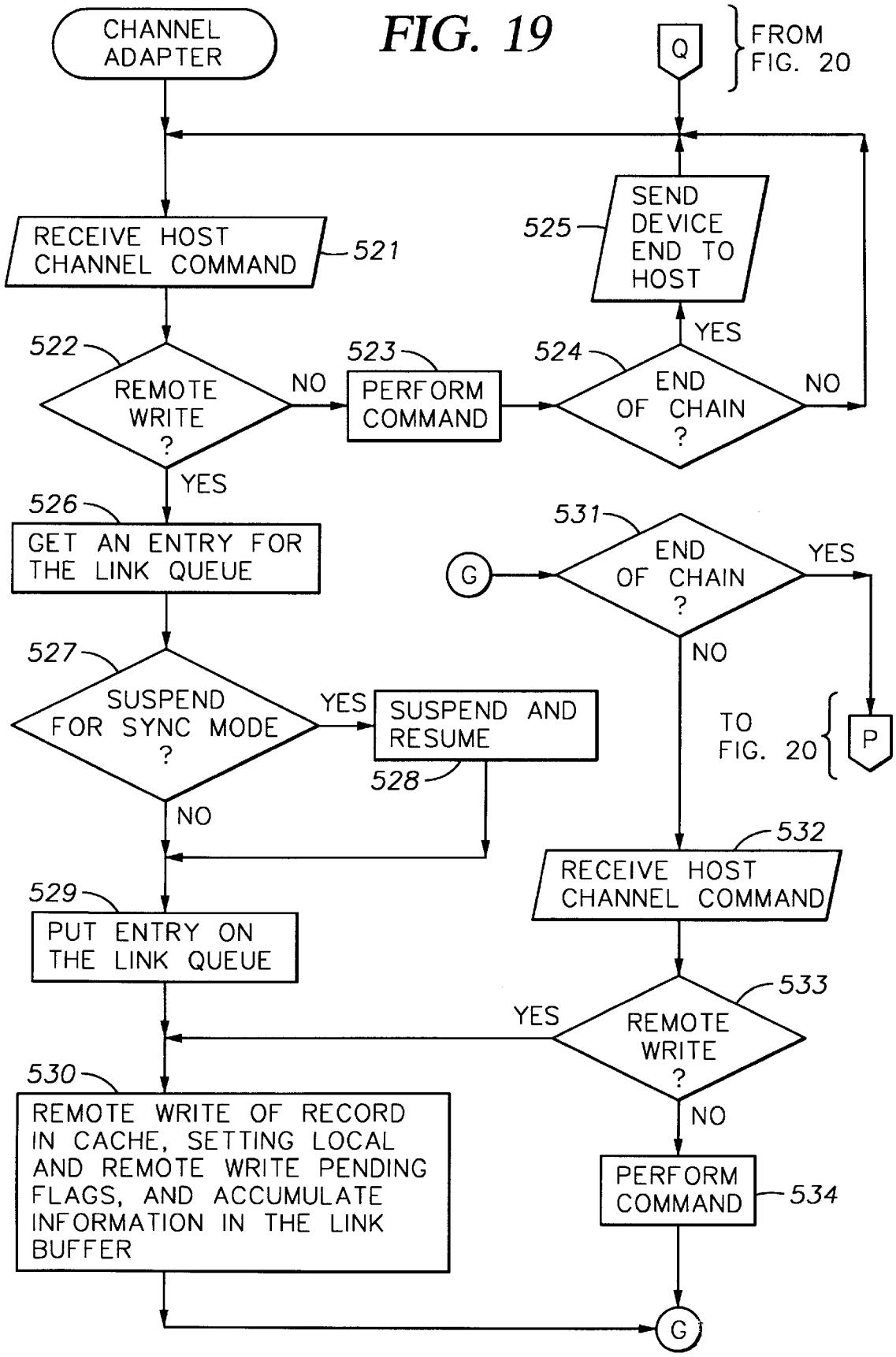
FIG. 19
CHANNEL ADAPTER
Q
FROM FIG. 20
RECEIVE HOST CHANNEL COMMAND
521
SEND DEVICE END TO HOST
525
522
REMOTE WRITE ?
NO
523
PERFORM COMMAND
524
END OF CHAIN ?
YES
NO
YES
526
GET AN ENTRY FOR THE LINK QUEUE
531
G
END OF CHAIN ?
YES
NO
527
SUSPEND FOR SYNC MODE ?
YES
SUSPEND AND RESUME
528
TO FIG. 20
P
NO
532
RECEIVE HOST CHANNEL COMMAND
529
PUT ENTRY ON THE LINK QUEUE
533
YES
REMOTE WRITE ?
530
REMOTE WRITE OF RECORD IN CACHE, SETTING LOCAL AND REMOTE WRITE PENDING FLAGS, AND ACCUMULATE INFORMATION IN THE LINK BUFFER
NO
PERFORM COMMAND
534
G

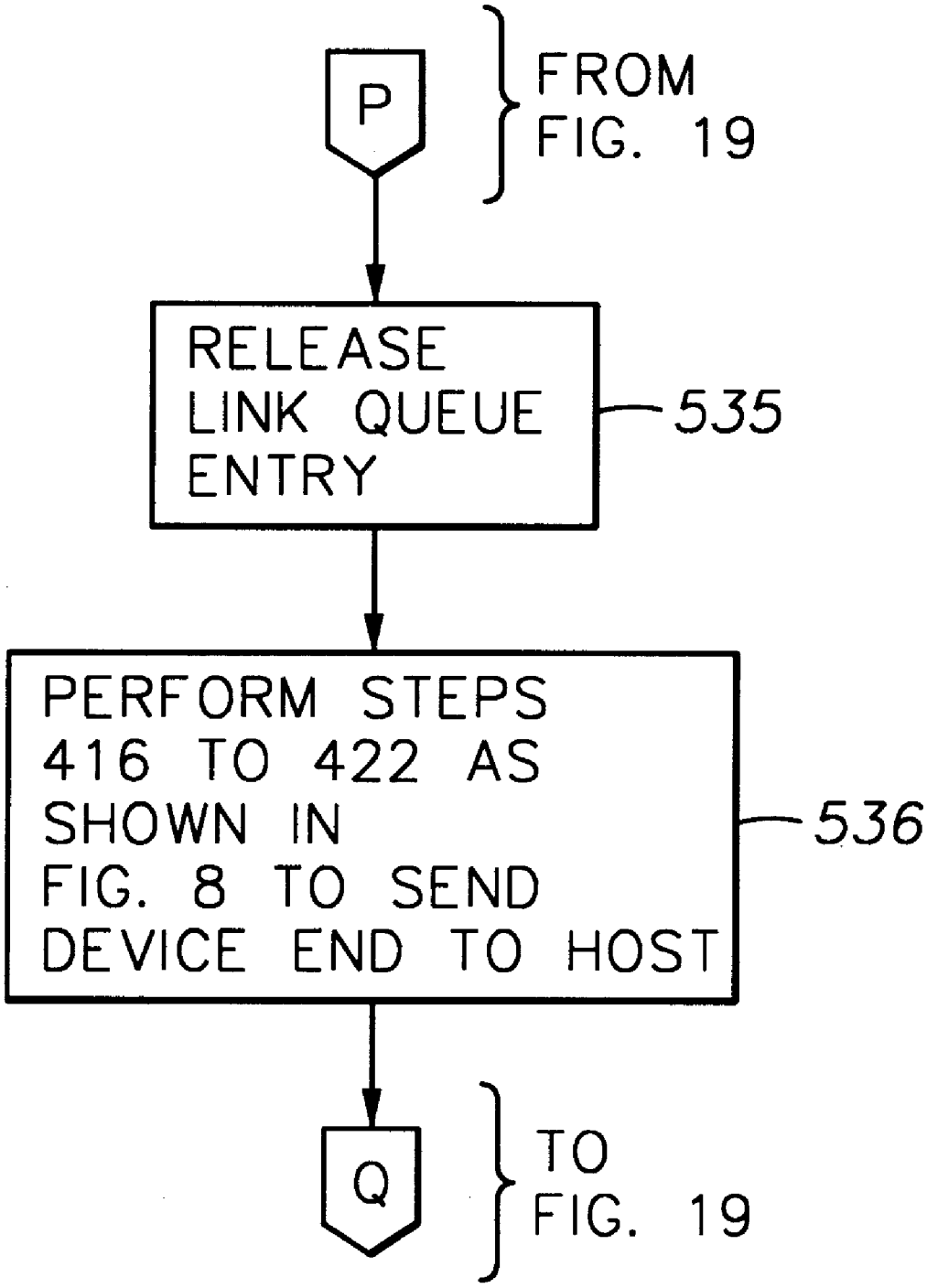
P
FROM FIG. 19
RELEASE LINK QUEUE ENTRY
535
PERFORM STEPS 416 TO 422 AS SHOWN IN FIG. 8 TO SEND DEVICE END TO HOST
536
Q
TO FIG. 19

FIG. 20

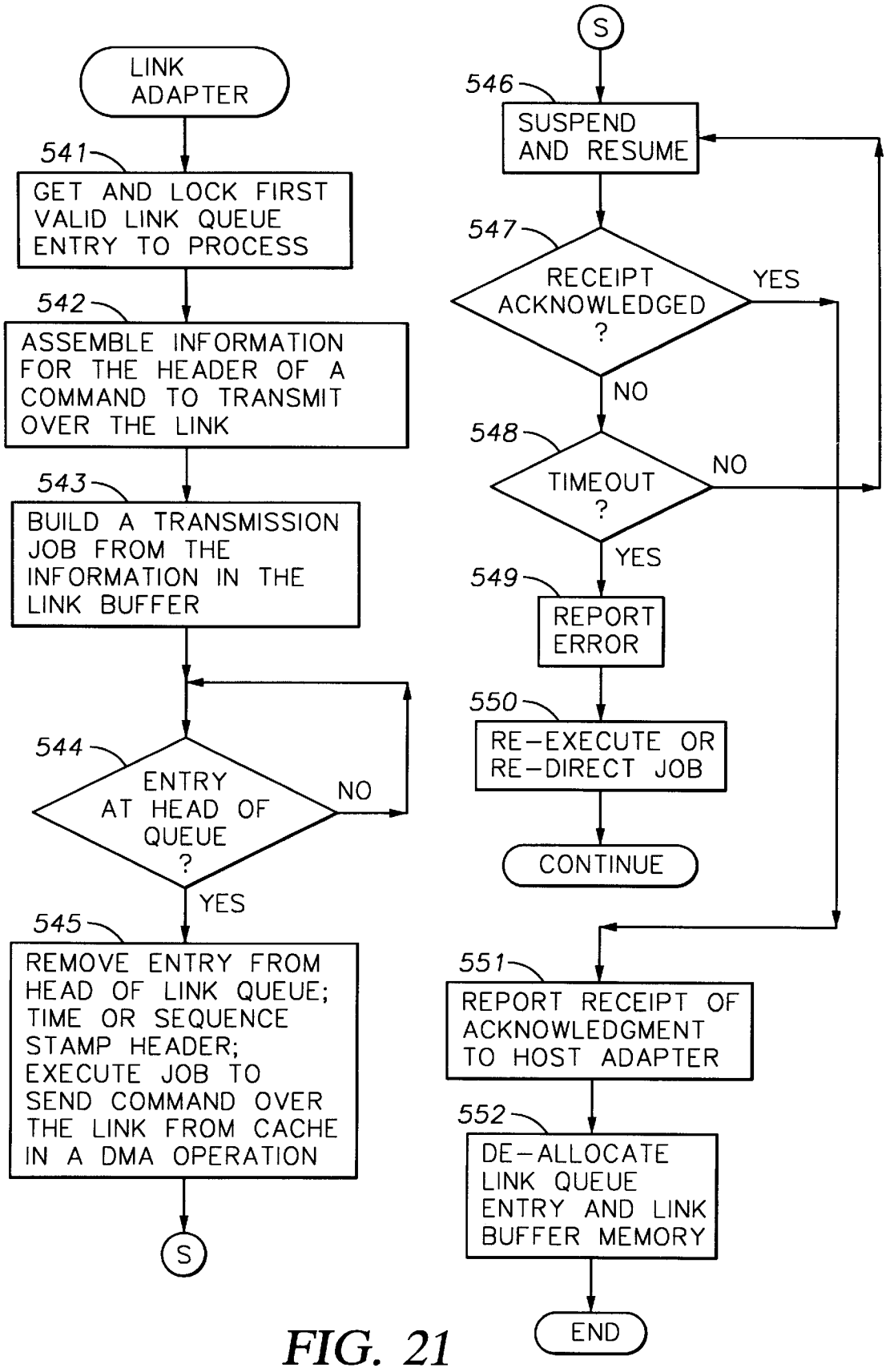
LINK ADAPTER
541
GET AND LOCK FIRST VALID LINK QUEUE ENTRY TO PROCESS
542
ASSEMBLE INFORMATION FOR THE HEADER OF A COMMAND TO TRANSMIT OVER THE LINK
543
BUILD A TRANSMISSION JOB FROM THE INFORMATION IN THE LINK BUFFER
544
ENTRY AT HEAD OF QUEUE ?
NO
YES
545
REMOVE ENTRY FROM HEAD OF LINK QUEUE; TIME OR SEQUENCE STAMP HEADER; EXECUTE JOB TO SEND COMMAND OVER THE LINK FROM CACHE IN A DMA OPERATION
S
S
546
SUSPEND AND RESUME
547
RECEIPT ACKNOWLEDGED ?
YES
NO
548
TIMEOUT ?
NO
YES
549
REPORT ERROR
550
RE-EXECUTE OR RE-DIRECT JOB
CONTINUE
551
REPORT RECEIPT OF ACKNOWLEDGMENT TO HOST ADAPTER
552
DE-ALLOCATE LINK QUEUE ENTRY AND LINK BUFFER MEMORY
END

FIG. 21

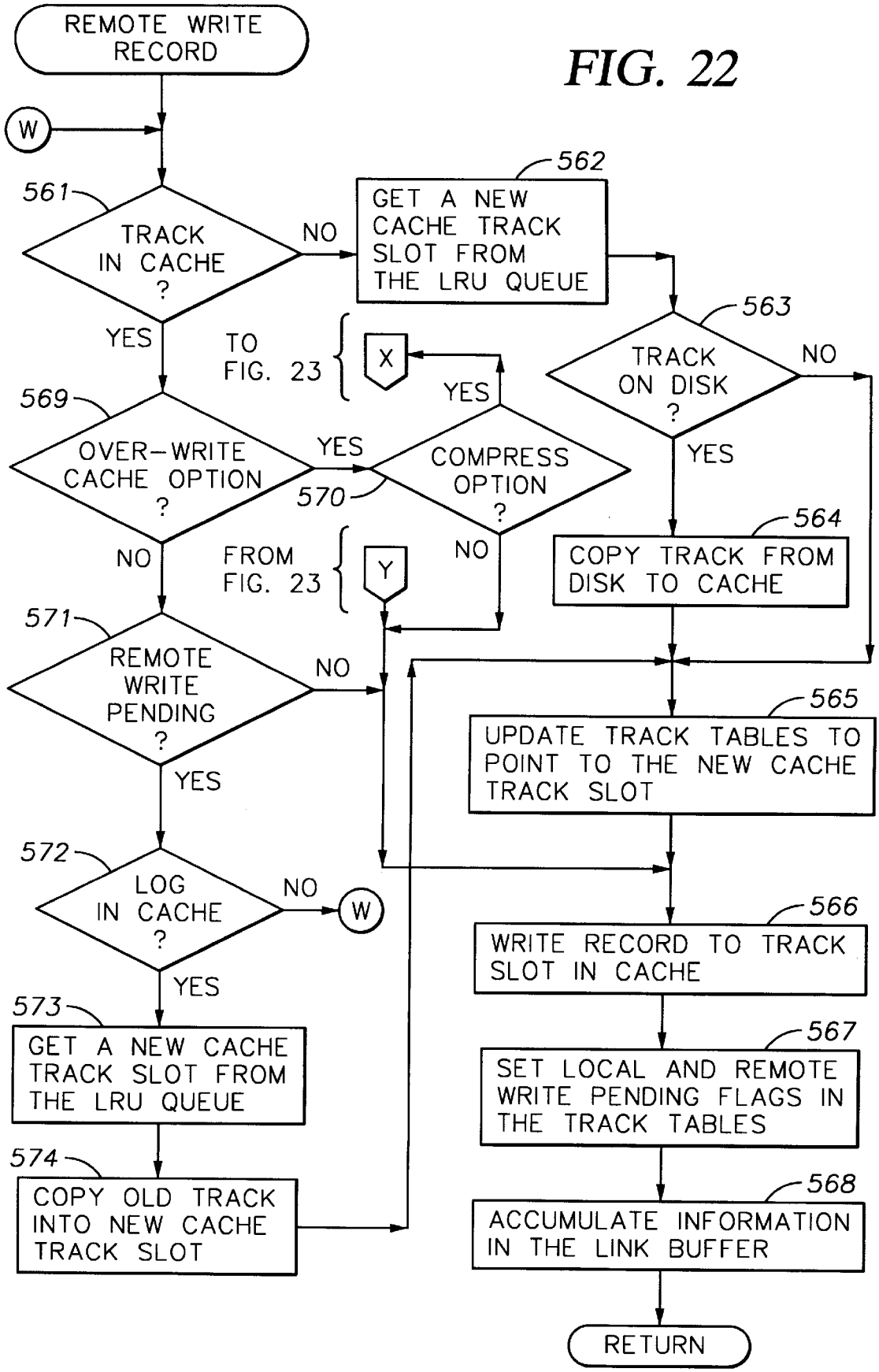
REMOTE WRITE RECORD
FIG. 22
W
561
TRACK IN CACHE ?
NO
YES
562
GET A NEW CACHE TRACK SLOT FROM THE LRU QUEUE
563
TRACK ON DISK ?
NO
YES
TO FIG. 23
X
YES
569
OVER-WRITE CACHE OPTION ?
YES
570
COMPRESS OPTION ?
NO
NO
FROM FIG. 23
Y
564
COPY TRACK FROM DISK TO CACHE
571
REMOTE WRITE PENDING ?
NO
YES
565
UPDATE TRACK TABLES TO POINT TO THE NEW CACHE TRACK SLOT
572
LOG IN CACHE ?
NO
W
YES
566
WRITE RECORD TO TRACK SLOT IN CACHE
573
GET A NEW CACHE TRACK SLOT FROM THE LRU QUEUE
567
SET LOCAL AND REMOTE WRITE PENDING FLAGS IN THE TRACK TABLES
574
COPY OLD TRACK INTO NEW CACHE TRACK SLOT
568
ACCUMULATE INFORMATION IN THE LINK BUFFER
RETURN

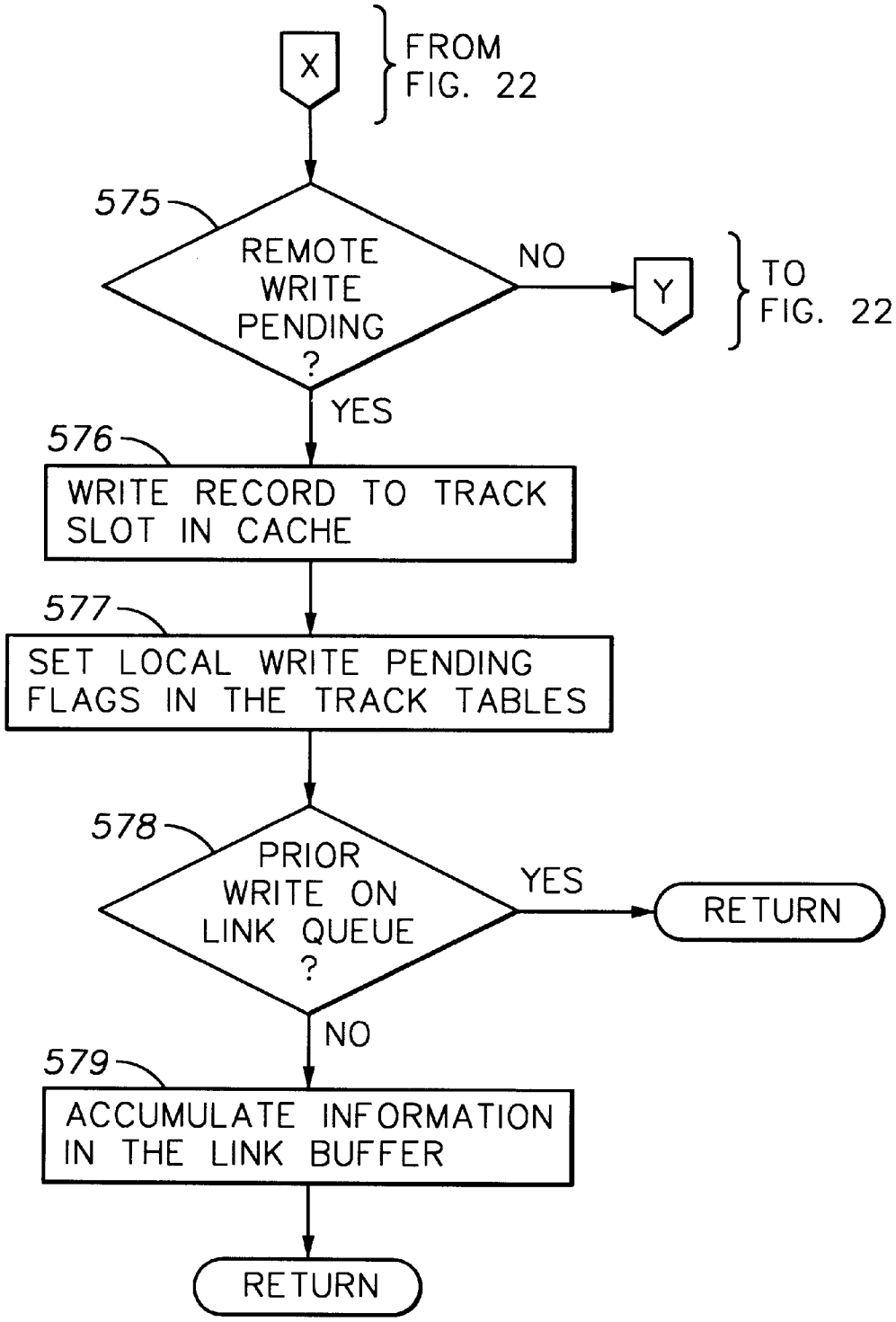
X
FROM FIG. 22
575
REMOTE WRITE PENDING ?
NO
Y
TO FIG. 22
YES
576
WRITE RECORD TO TRACK SLOT IN CACHE
577
SET LOCAL WRITE PENDING FLAGS IN THE TRACK TABLES
578
PRIOR WRITE ON LINK QUEUE ?
YES
RETURN
NO
579
ACCUMULATE INFORMATION IN THE LINK BUFFER
RETURN

FIG. 23

BUNDLING OF WRITE DATA FROM CHANNEL COMMANDS IN A COMMAND CHAIN FOR TRANSMISSION OVER A DATA LINK BETWEEN DATA STORAGE SYSTEMS FOR REMOTE DATA MIRRORING

RELATED APPLICATION

This application is a divisional of U.S. patent application Ser. No. 08/654,511 filed May 28, 1996, entitled REMOTE DATA MIRRORING by Yanai et al, issued as U.S. Pat. No. 5,742,792 on Apr. 21, 1998.

FIELD OF THE INVENTION

This invention relates to data storage, and more particularly, to a system and method for automatically providing and maintaining a copy or mirror of data stored at a location remote from the main or primary data storage device.

BACKGROUND OF THE INVENTION

Nearly all data processing system users are concerned with maintaining back-up data in order to insure continued data processing operations should their data become lost, damaged, or otherwise unavailable.

Large institutional users of data processing systems which maintain large volumes of data such as banks, insurance companies, and stock market traders must and do take tremendous steps to insure back up data availability in case of a major disaster. These institutions recently have developed a heightened awareness of the importance of data recovery and back-up in view of the many natural disasters and other world events including the bombing of the World Trade Center in New York City.

Currently, data processing system users often maintain copies of their valuable data on site on either removable storage media, or in a secondary "mirrored" storage device located on or within the same physical confines of the main storage device. Should a disaster such as fire, flood, or inaccessibility to a building occur, however, both the primary as well as the secondary or backed up data will be unavailable to the user. Accordingly, more data processing system users are requiring the remote storage of back up data.

One prior art approach at data back-up involves taking the processor out of service while back-up tapes are made. These tapes are then carried off premises for storage purposes. Should access to the backed up data be required, the proper tape must be located, loaded onto a tape drive, and restored to the host system requiring access to the data. This process is very time consuming and cost intensive, both in maintaining an accurate catalog of the data stored on each individual tape, as well as storing the large number of tapes required to store the large amounts of data required by these institutions. Additionally and most importantly, it often takes twenty-four hours before a back-up tape reaches its storage destination during which time the back-up data is unavailable to the user.

Additionally, today's systems require a significant amount of planning and testing in order to design a data recovery procedure and assign data recovery responsibilities. Typically, a disaster recovery team must travel to the test site carrying a large number of data tapes. The team then loads the data onto disks, makes the required network connections, and then restores the data to the "test" point of failure so processing can begin. Such testing may take days or even weeks and always involves significant human resources in a disaster recovery center or back-up site.

Some providers of prior art data storage systems have proposed a method of data mirroring whereby one host Central Processing Unit (CPU) or processor writes data to both a primary, as well as a secondary, data storage device or system. Such a proposed method, however, overly burdens the host CPU with the task of writing the data to a secondary storage system and thus dramatically impacts and reduces system performance.

Accordingly, what is required is a data processing system which automatically and asynchronously, with respect to a first host system, generates and maintains a back-up or "mirrored" copy of a primary storage device at a location physically remote from the primary storage device, without intervention from the host which seriously degrades the performance of the data transfer link between the primary host computer and the primary storage device.

SUMMARY OF THE INVENTION

This invention features a system which controls storing of primary data received from a primary host computer on a primary data storage system, and additionally controls the copying of the primary data to a secondary data storage system controller which forms part of a secondary data storage system, for providing a back-up copy of the primary data on the secondary data storage system which is located in a remote location from the primary data storage system. For remote copying of data from one storage system to the other without host involvement, the primary and secondary data storage system controllers are coupled via at least one high speed communication link such as a fiber optic link driven by LED's or laser. The high speed communication link also permits one data storage system to read or write data to or from the other data storage system.

In accordance with an aspect of the invention, the host processor sends chains of channel commands to the data storage system containing a primary (R1) volume of a remotely mirrored volume pair. The results of all channel commands of each chain, for example, are to be committed before commitment of the results of any following channel commands. The data storage system containing the primary (R1) volume bundles the write data for all write commands in the chain into a single write command for transmission over the data link to the secondary data storage system containing the secondary (R2) volume. The data storage system containing the primary (R1) volume decodes the channel commands to determine when it has received the last channel command in the chain, and once the last channel command in the chain is received, it transmits the bundle of write data for the chain over the link to the data storage system containing the secondary (R2) volume.

The decoding process is dependent on the syntax of the channel command words. A conventional fixed-block addressing (FBA) syntax, for example, has a "beginning of chain" channel command with the format START BLOCK, COUNT where COUNT is the number of following command words in the chain. The IBM count-key-data (CKD) syntax has a similar DEFINE EXTENT command, which defines a number of following channel command words included in the chain, although this is not the exclusive method used to indicate the extent of the chain in the IBM CKD syntax. The IBM CKD systax also has a transfer-in-channel command for branching to a noncontiguous channel command word. Alternatively, the syntax could use an "end of chain" command. One particular IBM ESCON syntax

uses a flag in every channel command word to indicate whether or not the word is the last word in its chain.

In a preferred implementation, the write data is stored in a cache memory in the data storage system containing the primary (R1) volume, and the data storage system containing the primary (R1) volume bundles the write data by accumulating, in a buffer, pointers to the write data in the cache memory.

The present invention therefore provides a data storage system which achieves nearly 100 percent data integrity by assuring that all data is copied to a geographically remote site, and in those cases when a back-up copy is not made due to an error of any sort, an indication is stored that the data has not been copied, but instead must be updated at a future time. The system operator or application programmer is free to choose a variety of remote mirroring and recovery operations best suited for a desired processing speed and level of data integrity.

Such a system is provided which is generally lower in cost and requires substantially less manpower and facilities to achieve than the prior art devices.

BRIEF DESCRIPTION OF THE DRAWINGS

These and other features and advantages of the present invention will be better understood when read together with the following drawings wherein:

FIG. **1** is a block diagram illustrating the system with remote data mirroring according to the present invention;

FIG. **2** is a schematic representation of a portion of an index or list maintained by the system of the present invention to determine various features including which primary data has been copied to a secondary disk;

FIG. **3** is a schematic representation of an additional list or index maintained by the system of the present invention to keep track of additional items including an invalid data storage device track, device ready status and write disable device status;

FIG. **4** is a block diagram showing a preferred construction for the remotely mirrored primary and secondary data storage systems and links;

FIG. **5** is a block diagram of a short distance option for linking two geographically separated data storage systems;

FIG. **6** is a block diagram of a long distance option for linking two geographically separated data storage systems;

FIG. **7** is a first portion of a flowchart showing the operation of a channel adapter when providing data access in the synchronous and semi-synchronous remote mirroring modes;

FIG. **8** is a second portion of the flowchart showing the operation of a channel adapter when providing data access in the synchronous and semi-synchronous remote mirroring modes;

FIG. **9** is a flowchart showing a modification of FIG. **7** for adaptive copy remote mirroring modes;

FIG. **10** is a flowchart showing operation of a data storage system when a host requests a state change to a secondary (R2) volume in the data storage system;

FIG. **11** is a flowchart showing operation of a channel adapter when responding to various failures depending on whether or not an "all-links domino mode" or a "volume domino mode" is enabled;

FIG. **12** is a block diagram illustrating the use of an application-based recovery program in a data processing system employing remotely-mirrored data storage systems;

FIGS. **13**A and **13**B together comprise a flowchart showing the invocation and execution of the application-based recovery program for the data processing system of FIG. **12**;

FIG. **14** is a first portion of a flowchart showing an iterative routine for migrating a volume concurrent with host access to the volume;

FIG. **15** is a second portion of the flowchart begun in FIG. **14**;

FIG. **16** is a flowchart showing how a channel adapter maintains remote write pending bits, remote invalid bits, and remote invalid track counts in the data processing system of FIG. **4**;

FIG. **17** is a flowchart showing an iterative routine using the remote write pending bits, remote invalid bits, and remote invalid track counts for migrating a volume concurrent with host access to the volume;

FIG. **18** is a block diagram showing data structures in the cache memory of the data processing system of FIG. **4**;

FIG. **19** is a first portion of a flowchart showing how a host processor bundles remote write commands from all of the channel command words (CCW) in a single CCW chain into a single write command transmitted over a link to a remote data storage system;

FIG. **20** is a second portion of the flowchart begun in FIG. **19**;

FIG. **21** a flowchart showing the operation of a link adapter in the data processing system of FIG. **4**;

FIG. **22** is a first portion of a flowchart of the operation of a channel adapter when writing a record to a primary (R1) volume located in the same data storage system containing the primary (R1) volume; and

FIG. **23** is a second portion of the flowchart begun in FIG. **22**.

While the invention is susceptible to various modifications and alternative forms, specific embodiments thereof have been shown by way of example in the drawings and will be described in detail herein. It should be understood, however, that it is not intended to limit the invention to the particular forms disclosed, but to the contrary, the intention is to cover all modifications, equivalents, and alternatives falling within the scope of the invention as defined by the appended claims.

DETAILED DESCRIPTION OF THE INVENTION

A. Overview

The present invention features a system which provides a remote mirrored data storage system which contains generally identical information to that stored on a primary data storage system. Utilizing such a system, data recovery after a disaster can be nearly instantaneous and may require little, if any, human intervention. Using the present system, the data is retrieved from a remote device through the host data processing system.

A system in accordance with the present invention is shown generally at **10**, FIG. **1**, and includes at site A, which is a first geographic location, a host computer system **12** as is well known to those skilled in the art. The host computer system **12** is coupled to a first and primary data storage system **14**. The host **12** writes data to and reads data from the primary data storage system **14**.

The primary data storage system **14** includes a primary data storage system controller **16** which receives data from the host **12** over data signal path **18**. The primary data storage system controller **16** is also coupled to a storage

device **20** which may include a plurality of data storage devices **22***a*–**22***c*. The storage devices may include disk drives, optical disks, CD's or other data storage devices. The primary system controller **16** is coupled to the storage device **20** by means of data signal path **24**.

The primary data storage system controller **16** includes at least one channel adapter (C.A.) **26** which is well known to those skilled in the art and interfaces with host processing system **12**. Data received from the host is typically stored in cache **28** before being transferred through disk adapter (D.A.) **30** over data signal path **24** to the primary storage device **20**. The primary data storage controller **16** also includes a data director **32** which executes one or more sets of predetermined micro-code to control data transfer between the host **12**, cache memory **28**, and the storage device **20**. Although the data director **32** is shown as a separate unit, either one of a channel adapter **26** or disk adapter **30** may be operative as a data director, to control the operation of a given data storage system controller. Such a reconfigurable channel adapter and disk adapter is disclosed in U.S. Pat. No. 5,335,352 entitled RECONFIGURABLE, MULTI-FUNCTION DATA STORAGE SYSTEM CONTROLLER SELECTIVELY OPERABLE AS AN INPUT CHANNEL ADAPTER AND A DATA STORAGE UNIT ADAPTER, which is fully incorporated herein by reference.

The primary data storage system **14** according to one embodiment of the present invention also includes a service processor **34** coupled to the primary data storage system controller **16**, and which provides additional features such as monitoring, repair, service, or status access to the storage system controller **16**.

The primary data storage system controller **16** of the present invention also features at least a second disk adapter **36** coupled to the internal bus **38** of the primary data processing system controller **16**. The second disk adapter **36** is coupled, via a high speed communication link **40** to a disk adapter **42** on a secondary data storage system controller **44** of a secondary data storage system **46**. Such high speed, point-to-point communication links between the primary and secondary data processing system controllers **16** and **44** include a fiber optic link driven by an LED driver, per IBM ESCON standard; a fiber optic link driven by a laser driver, and optionally T1 and T3 telecommunication links. Utilizing network connections, the primary and secondary data storage system controllers **16** and **44** may be connected to FDDI networks, T1 or T3 based networks and SONET networks.

The secondary data storage system **46** is located at a second site geographically removed from the first site. For this patent application, "geographically removed site" means not within the same building as the primary data storage system. There are presently known data processing systems which provide data mirroring to physically different data storage systems. The systems, however, are generally within the same building. The present invention is directed to providing complete data recovery in case of disaster, such as when a natural disaster such as a flood or a hurricane, or man made disasters such as fires or bombings destroy one physical location, such as one building.

As in the case of the primary data storage system, the secondary data storage system **46** includes, in addition to the secondary data storage system controller **44**, a secondary data storage device **48** including a plurality of storage devices **50***a*–**50***c*. The plurality of storage devices on the secondary data storage system **46**, as well as the primary data storage system **14**, may have various volumes and usages such as a primary data storage device **50***a* which is primary with respect to the attached storage controller **44** and host **52** in the case of the secondary data storage system **46**, and the primary storage device **22***a* which is primary with respect to the first or primary host **12** in the case of the primary data storage system **14**.

Additionally, each storage device, such as storage device **48**, may include a secondary storage volume **50***b* which serves as the secondary storage for the primary data stored on the primary volume **22***a* of the primary data storage system **14**. Similarly, the primary data storage system **14** may include a secondary storage volume **22***b* which stores primary data received and copied from the secondary site and data processing system **46** and host **52**.

Additionally, each storage device **20**, **48**, may include one or more local volumes or storage devices **22***c*, **50***c*, which are accessed only by their locally connected data processing systems.

The secondary storage system controller **44** also includes at least a first channel adapter **54** which may receive data from an optionally connected secondary host **52** or an optionally connected hotsite host or CPU **56**. Optionally, the primary host **12** may include a data signal path **58** directly into the channel adapter **54** of the secondary data storage system **46**, while the optional secondary host **52** may include an optional data path **60** into the channel adapter **26** of the primary data storage system **14**. Although the secondary host **52** illustrated in FIG. **1** is not required for remote data mirroring as described in the present patent application, such a host would be required for data retrieval if both the primary host **12** as well as the primary data storage system **14** would be rendered inoperative. Similarly, a hotsite host or CPU **56** may optionally be provided at a third geographically remote site to access the data stored in the secondary data storage system **46**.

The high speed link **40** between the primary and secondary data storage systems **14** and **46** is designed such that multiple links between the primary and secondary storage system may be maintained for enhanced availability of data and increased system performance. The number of links is variable and may be field upgradeable. Additionally, the service processor **34** of the primary data storage system **14** and the service processor **62** of the secondary data storage system **46** may also be coupled to provide for remote system configuration, remote software programming, and a host base point of control of the secondary data storage system.

The secondary data storage system controller **44** also includes cache memory **64** which receives data from channel adapter **54** and disk adapter **42**, as well as disk adapter **66** which controls writing data to and from secondary storage device **48**. Also provided is a data director **68** which controls data transfer over communication bus **70** to which all the elements of the secondary data storage system controller are coupled.

An additional feature of the system of FIG. **1** is the ability to dynamically reconfigure channel adapters as disk adapters and disk adapters as channel adapters, as described in U.S. Pat. No. 5,269,011 entitled DYNAMICALLY RECONFIGURABLE DATA STORAGE SYSTEM WITH STORAGE SYSTEM CONTROLLERS SELECTIVELY OPERABLE AS CHANNEL ADAPTERS OR STORAGE DEVICE ADAPTERS, which is fully incorporated herein by reference.

The primary and secondary data storage systems may optionally be connected by means of currently available, off-the-shelf channel extender equipment using bus and tag or ESCON interfaces.

B. Remote Mirroring Facility

The data storage system **10** of FIG. **1** is designed to provide the copying of data from a primary data storage

system to a physically remote secondary data storage system transparent to the user, and external from any influence of the primary host which is coupled to the primary data storage system. The data storage system **10** is designed to operate in at least two modes, the first being a real-time or synchronous mode wherein the primary and secondary storage systems must guarantee that the data exists and is stored in two physically separate data storage units before input/output completion; that is, before channel end and device end is returned to the primary host. Alternatively, the data storage system **10** is designed to operate in a point-in-time or asynchronous mode wherein the data is copied to the remote or secondary data storage system asynchronously from the time when the primary or local data processing system returns the input/output completion signal (channel end and device end) to the primary host. This eliminates any performance penalty if the communication link between the primary and secondary data storage systems is too slow, but creates the additional needs to manage the situation where data is not identical or in "sync" between the primary and secondary data storage systems.

Thus, in the real time or synchronous mode, the primary data storage system automatically controls the duplication or copying of data to the secondary data storage system controller transparently to the primary host computer. Only after data is safely stored in both the primary and secondary data storage system, as detected by an acknowledgement from the secondary storage system to the primary storage system, does the primary data storage system acknowledge to the primary host computer that the data is synchronized. Should a disaster or facility outage occur at the primary data storage system site, the user will simply need to initialize the application program in the secondary data storage system utilizing a local host (**52**) or a commercial hotsite CPU or host **56**.

The link between the primary and secondary storage system controllers **14** and **46** may be maintained in a unidirectional mode wherein the primary data storage system controller monitors and controls data copying or mirroring. Alternatively, a bi-directional implementation may be used wherein either controller can duplicate data to the other controller, transparently to the host computer. Should a disaster or facilities outage occur, recovery can be automatic with no human intervention since the operational host computer already has an active path (**40**, **58**, **60**) to the data through its local controller. While offering uninterrupted recovery, performance will be slower than in an unidirectional implementation due to the over head required to manage intercontroller tasks.

In the second, point-in-time or asynchronous mode of operation, the primary data storage system transparently duplicates data to the secondary data storage system after the primary data storage system acknowledges to the host computer, via channel end and device end, that the data has been written to the storage device and the input/output operation has been completed. This eliminates the performance impact of data mirroring over long distances. Since primary and secondary data are not synchronized, however, the primary data storage system must maintain a log file of pending data which has yet to be written to the secondary data storage device. Such data may be kept on removable, non-volatile media, in the cache memory of the primary or secondary data storage system controller as will be explained below, or in the service processor **34**, **62** of the primary or secondary data storage system.

Accordingly, a feature of the data storage system **10** is the ability of a data storage system to control the transfer or copying of data from a primary data storage system to the secondary data storage system, independent of and without intervention from one or more host computers. Most importantly, in order to achieve optimum data mirroring performance, such data mirroring or copying should be performed asynchronously with input/output requests from a host computer. Accordingly, since data will not be immediately synchronized between the primary and secondary data storage systems, data integrity must be maintained by maintaining an index or list of various criteria including a list of data which has not been mirrored or copied, data storage locations for which a reformat operation is pending, a list of invalid data storage device locations or tracks, whether a given device is ready, or whether a device is write-disabled. Information must also be included as to the time of the last operation so that the data may later be synchronized should an error be detected.

A feature of the system of FIG. **1** is that both the primary or secondary data storage systems maintain a table of the validity of data in the other storage system. As disclosed in U.S. Pat. No. 5,206,939 entitled SYSTEM AND METHOD FOR DISK MAPPING AND DATA RETRIEVAL, which is fully incorporated herein by reference, the present system maintains a list or index, utilizing one or more flag bits, in a hierarchical structure, on each physical and logical data storage device.

In the system of FIG. **1**, however, such information is kept on both devices for each individual system as well as the other data storage system. Thus, as illustrated in FIG. **2** in the partial list or table **100**, each data storage system maintains an indication of write or copy pending **102** of both the primary data (M1) **104**, and the secondary data (M2) **106**. Similarly, an index is maintained of a pending format change since a disk format change may be accomplished. The format pending bits **108** including a first primary bit **110** and a second secondary bit **112** indicate that a format change has been requested and such change must be made on the disk.

Thus, when a host computer writes data to a primary data storage system, it sets both the primary and secondary bits **104**, **106** of the write pending bits **102** when data is written to cache. For these examples, the M1 bit will refer to the primary data storage system and the M2 bit will refer to the secondary data storage system. When the primary data storage system controller's disk adapter writes the data to the primary data storage device, it will reset bit **104** of the write pending indicator bits **102**. Similarly, once the secondary data storage system has written the data to the secondary data storage device, the secondary data storage write pending indicator bit **106** will be reset.

The service processors in one embodiment of the present invention will periodically scan the index table for write pending indicator bits and invoke a copy task which copies the data from the primary data storage device to the secondary data storage device. In addition, one or more of the spare index or table bits **114**, **116** may be utilized to store other data such as time stamp, etc.

In addition to the write pending and format pending bits described above, the data storage system **10** also includes several additional general purpose flags to assist in error recovery. As shown in FIG. **3**, invalid track flags **120** including primary bit **122** and secondary bit **124** are utilized and maintained on each data storage device to indicate that the data storage location such as a track, does not contain valid data. Another background task running on the data storage system such as in the service processor or storage system controller constantly checks invalid track bits on

each data storage device, and if a bit is found to be set, the copy task is invoked to copy the data from the known good device to the device with the invalid flag track set. Additional flags may be provided such as the device ready flags **126** including bits **128** and **130** which serve to indicate that the device is ready. Similarly, write disable flags **132** may be provided which indicate that a particular primary device or drive **134** or secondary device or drive **136** can presently not be written to. Data can still be copied to the good or enabled drive and then later copied to the disabled drive. If one drive or device is bad, the present invention will set all tracks of that drive as not valid to later cause a copy of all the data.

Accordingly, each data storage device keeps data validity information about its mirrored device. If for some reason a device is not accessible, either the primary or the secondary device, every new write command goes to the accessible mirrored device along with information that the not accessible device has a track which is not valid. As soon as the non-accessible device becomes accessible, then automatically, as a background operation, the drives re-synchronize. In the case when a specific track is not shown on both the primary and secondary storage system, an indication of such will be assigned and the user will be alerted. A utility operating on the service processors will give the user a report of all the non-valid (out of sync) tracks. This report can be transferred from one site to another over the link **63**, FIG. **1**, that connects the two service processors **34**, **62**.

C. Communication Link Options

As introduced above with respect to FIG. **1**, the disk adapters **36** and **42** are configured for interconnecting the primary data storage system **14** to the secondary storage system via the high-speed link **40**. Further details of various link options are shown in FIGS. **4** to **6**.

FIG. **4** shows a data processing system **210** having a host central processing unit **212**, a primary data storage system **214**, and a secondary data storage system **246**. In the preferred construction shown in FIG. **4**, the primary and secondary data storage systems **214**, **246** are integrated cached disk arrays having dual, redundant internal and external data links. In particular, the primary data storage system **214** has dual internal busses **238**, **239** from a dual-port cache **228**, dual channel adapters **226**, **227**, dual disk adapters **230**, **231**, and dual link adapters **236**, **237**. The host **212** at site A is connected to each of the dual channel adapters **226**, **227** via respective channel links **218**, **219**. The secondary data storage system **246** is connected to the dual link adapters **236**, **237** in the primary data storage system **214** via respective communicative links **240**, **241**. The secondary data storage system **246** is also connected to the primary data storage system via dual signal paths **263**, **265** from a dual-port service processor **234**.

Data storage **220** in the primary data storage system **214** is provided by an array of dual-port disk drives **223***a*, **223***b*, **223***c*, **223***d*. Each of the disk drives **223***a*, **223***b*, **223***c*, **223***d*, is connected to each of the disk adapters **230**, **231** by a respective fiber channel loop **225**, **229**. For increased data storage capacity, additional disk drives could be inserted into the fiber channel loops **225**, **229**, and additional disk adapters could be included in the primary data storage system to accommodate additional fiber channel loops of additional disk drives.

As shown in FIG. **4**, the secondary data storage system **246** preferably has the same construction as the primary data storage system **214**, and could be linked to the host central processing unit **212** via redundant signal paths **258**, **259**. The data processing system **210** in FIG. **4** can be configured for remote mirroring from a user interface of the service processor **234** in the primary data storage system. The host central processing unit **212** can also be provided with optional host remote mirroring (RM) software **213** so that the data processing system can be configured and monitored from a user interface of the host central processing unit. Host application programs can also interface with the remote mirroring facility of the data storage systems **214**, **246** via the optional host remote mirroring (RM) software **213**. An optional host central processing unit **252** could be located at the remote site of the secondary data storage system **246**, and linked to each of the primary and secondary data storage systems **214**, **246** via redundant signal paths.

The communication links **240**, **241** from the dual link adapters **236**, **237** are preferably IBM ESCON standard fiber-optic links. An ESCON fiber-optic link, with continuous optical fiber, can link primary and secondary data storage systems spaced by up to 3 kilometers apart. ESCON links between primary and secondary storage units can be extended by repeaters or interfaces to T3 or E3 circuits. In practice, it is desirable to standardize link configurations to two options; namely, a relatively short distance option for distances up to about 60 kilometers (37.5 miles) between the primary and secondary storage units, and a relatively long distance option for distances greater than about 60 kilometers between the primary and secondary data storage systems. In each case, each link adapter has a standard two-port IBM specification LED multimode ESCON interface. It is desirable to provide a minimum of two and a maximum of at least eight link adapters in each data storage system.

Shown in FIG. **5** is the short distance option for interconnecting an integrated cached disk array **301** having link adapters **302**, **303** to a remote integrated cached disk array **304** having link adapters **305**, **306**. Repeaters **307**, **308** interface the ESCON channels from each of the link adapters **302**, **305** to a private fiber or leased common carrier circuit **309** providing a static connection. In a similar fashion, repeaters **310**, **311** interface the ESCON channels from each of the link adapters **303**, **306** to a private fiber or leased common carrier circuit **312** providing a static connection. The repeaters **306**, **307**, **310**, **311** are IBM 9032/9033 ESCON Directors or 9036 Remote Channel Extenders. These standard ESCON Directors or Remote Channel Extenders may be used in multiple 20 kilometer hops. In general, for the short distance option, the links can be any combination of multimode fiber, ESCON Directors, Remote Channel Extenders, and single-mode fiber to achieve the maximum link distance of 60 km.

Shown in FIG. **6** is the long distance option for interconnecting an integrated cached disk array **321** having link adapters **322**, **323** to an integrated cached disk array **324** having link adapters **325**, **326**. ESCON to T3/E3 converters **327**, **328** interface the ESCON channels from each of the link adapters **322**, **325** to a T3 or E3 circuit **329**. In a similar fashion, repeaters **330**, **331** interface the ESCON channels from each of the link adapters **303**, **306** to a T3 or E3 circuit **332**. A suitable ESCON to T3/E3 converter may include Data Switch Corporation Model 9800 MAX (Multiple Architecture Extender). The 9000 MAX accepts up to four ESCON inputs, and multiplexes the data across 1 or 2 lines. T3 and E3 are copper or fiber-based telecommunications circuit. T3 is available in North America, and E3 is available in Europe. T3 has a bandwidth of 44.5 megabits per second, and E3 has a bandwidth of 34.5 megabits per second. A T3 or E3 circuit is sometimes referred to as "broad band". A T3/E3 circuit can be "fragmented", subdivided for multiple application or user access, or be dedicated point-to-point.

Data channels between a host and a storage system remote from the host can be constructed in a fashion similar to the links shown in FIGS. **5** or **6**.

D. Initial Synchronization

Once the physical links are established between the primary and secondary data storage systems, and the user specifies which logical storage devices or volumes are to be remotely mirrored, appropriate microcode is loaded into the data storage systems. It is also possible that the primary and secondary logical volumes could also be configured for local mirroring for enhanced redundancy. Alternatively, local redundancy could employ techniques for distributing the data bits of each byte or word of data in a logical device or volume across a multiplicity of physical disk drives in various ways known as levels of RAID (redundant arrays of inexpensive disks).

RAID techniques are described in the following publications: Patterson et al., "A Case for Redundant Arrays of Inexpensive Disks (RAID)," Report No. UCB/CSD 87/391, Computer Science Division (EECS), University of California, Berkeley, Calif., December 1987 (pages 1 to 24); Patterson et al., "Introduction to Redundant Arrays of Inexpensive Disks (RAID)," COMPCON 89 Proceedings, Feb. 27–Mar. 3, 1989, IEEE Computer Society, pp. 112–117; Ousterhout et al., "Beating the I/O Bottleneck: A Case for Log-Structured File Systems," Operating Systems Review, Vol. 23, No. 1, ACM Press, January, 1989, pp. 11–28; Douglis et al., "Log Structured File Systems," COMPCON 89 Proceedings, Feb. 27–Mar. 3, 1989, IEEE Computer Society, pp. 124–129; and Rosemblum et al., "The Design and Implementation of a Log-Structured File System," ACM Transactions on Computer Systems, Vol. 1, Feb. 1992, pp. 26–52; which are all incorporated herein by reference.

As soon at the communication links are established to interconnect the primary and secondary data storage systems, synchronization of the primary and secondary storage devices or logical volumes begins, and data is copied from the primary (R**1**) devices to the secondary (R**2**) devices. While this initial synchronization is occurring, host application input/output may be addressed to the primary (R**1**) devices. Typically, this application input/output is given precedence over the initial synchronization activity.

E. Multiple Simultaneous Operating Modes for the Remote Mirroring Facility

It is advantageous to provide the remote mirroring facility in the system **210** of FIG. **4** with multiple simultaneous operating modes best suited for the purposes of the desired remote mirroring. For example, remote mirroring may be used for data migration as well as for disaster recovery, and specific operating modes will be described that are best suited for data migration, and others will be described that are best suited for disaster recovery. Data migration, for example, typically occurs when a data center is moved from one geographic location to another, or when an old data storage system is replaced with a new data storage system.

Specific operating modes will also be described that are best suited for particular application programs. Different application programs, for example, may have different requirements for criticality of data integrity. Certain application programs may have specific procedures, such as transaction processing or journaling facilities, for ensuring data integrity relatively independent of the data integrity of the data storage systems.

The suitability of remote mirroring may also depend on the particular use or purpose of a dataset. Data bases, logs, catalogs, system residence volumes, and program libraries are excellent candidates for remote mirroring. Multiple logs when placed on separate logical volumes on different physical devices also aid business operations recovery in the event of a disaster. Page, spool, work, and sort datasets, however, are poor remote mirroring candidates as they are write-intensive often to only a small number of volumes.

To provide multiple simultaneous remote mirroring operating modes for specific applications, the remote mirroring facility defines an operating mode for each logical volume of data in the storage devices in the primary and secondary data storage systems **214**, **246**. Each logical volume may include a number of logical tracks of data and may reside on one or more disk drives in either the primary or secondary data storage system **214**, **246**.

Each logical volume has a logical volume type that is either primary, secondary, or local. A local logical volume does not participate in remote mirroring. A pair (R**1**, R**2**) of respective primary (R**1**) and secondary (R**2**) logical volumes participates in remote mirroring according to either a synchronous mode, a semi-synchronous mode, an adaptive copy—write pending mode, or an adaptive copy—disk mode, as will be further described below.

The operational modes are selectable at the logical volume level based on the performance, distance, and speed of recovery requirements. All primary (R**1**) volumes are configured for either the synchronous or semi-synchronous mode. These two modes are considered to be pre-determined remote mirroring modes. In addition, the primary (R**1**) volumes (all, individual, or a range) may also be configured for the adaptive copy—write pending or adaptive copy—disk mode. Each volume configured for adaptive copy also has an associated "skew" parameter. In the adaptive copy—write pending mode, this skew parameter is the maximum write pending threshold. In the adaptive copy—disk mode, this skew parameter is the maximum invalid tracks threshold. This skew value may be set to the same value for all adaptive copy volumes or be a different value for each adaptive copy volume. The adaptive copy mode and its skew value may be enabled (or disabled) for individual remotely mirrored pairs or all remotely mirrored pairs using remote mirroring commands.

(1) Synchronous Mode

In the synchronous mode, data on the primary (R**1**) and secondary (R**2**) volumes are always fully synchronized at the completion of an I/O sequence. The data storage system containing the primary (R**1**) volume informs the host that an I/O sequence has successfully completed only after the data storage system containing the secondary (R**2**) volume acknowledges that it has received and checked the data.

In particular, when the data storage system containing the primary (R**1**) volume has valid data in cache destined for a secondary (R**2**) volume, a link adapter transfers data over its link path to the cache in the data storage system housing the secondary (R**2**) volume. This data transfer occurs while the data storage system containing the primary (R**1**) volume continues to process input/output commands. If the data storage system containing the primary (R**1**) volume does not receive acknowledgment of a successful transfer from the other data storage system within a timeout period or another failure occurs that prevents the data transfer, the data storage system containing the primary (R**1**) volume sends a "unit check" with appropriate sense bytes to the host.

In a CKD environment, the data storage system containing the primary (R**1**) volume sends channel end (CE) and device end (DE) to the host after each write to the volume with the exception of the last write in the channel command word (CCW) chain. On the last write, the data storage system sends only CE to the host. When the data storage

system containing the secondary (R2) volume acknowledges and checks receipt of the last write in the chain, the data storage system containing the primary (R1) volume sends DE to the host and the host considers the input/output complete and starts the next input/output operation.

In an open systems environment, the data storage system containing the primary (R1) volume handles each input/output command separately and informs the host of successful completion when the data storage system containing the secondary (R2) volume acknowledges and checks receipt of the data. That is, the data storage system containing the primary (R1) volume disconnects from the channel and informs the host of successful completion of the input/output operation only after confirming that the data resides in cache in both data storage systems. If a problem occurs with data synchronization, the data storage system containing the primary (R1) volume sends a "unit check" with appropriate sense bytes to the host. This causes the host to retry the input/output operation. These actions maintain data integrity and ensure that two copies of the data exist real-time in both systems before the input/output completes.

The synchronous mode is recommended primarily for the short distance option of FIG. **5**. In normal operation, this mode will have an impact on write performance to primary (R1) volumes. This performance impact is due to overhead associated with remote data transfer, fiber latency, and acknowledgment of the synchronous operation.

(2) Semi-synchronous Mode

In the semi-synchronous mode, the remotely mirrored volumes (R1, R2) are always synchronized between the primary (R1) and the secondary (R2) prior to initiating the next write operation to these volumes. The data storage system containing the primary (R1) volume informs the host of successful completion after each write operation.

When the data storage system containing the primary (R1) volume has valid data in cache destined for a secondary (R2) volume, a link adapter transfers data via an available link path to the cache in the data storage system containing the secondary (R2) volume. This data transfer occurs while the data storage system containing the primary (R1) volume continues to perform additional channel commands. If the host issues a new write operation for a primary (R1) volume with a write pending status, the data storage system containing the primary (R1) volume disconnects from the host channel and returns a "non-immediate retry" message. The data storage system containing the primary (R1) volume then starts another input/output operation on another channel. When the write pending status is cleared (write completed and acknowledged and checked from the secondary (R2) volume), the data storage system containing the primary (R1) volume reconnects to the channel and continues processing the write operation on the channel from which it disconnected.

The semi-synchronous mode is recommended primarily for the long distance option of FIG. **6**. The semi-synchronous mode is designed for situations needing high performance at the data storage system containing the primary (R1) volume and tolerating a gap of up to one input/output (worst case) in data synchronization. Although write operations can be held up due to synchronization between primary (R1) and secondary (R2) volumes, read operations continue uninterrupted.

The semi-synchronous mode is most suitable for page, spool, work, and sort datasets. In some cases, spreading these datasets across multiple physical devices may alleviate any performance impact due to a high number of writes.

(3) Channel Adapter Control Logic for the Pre-determined Modes

Turning now to FIGS. **7** and **8**, there is shown a flowchart of channel adapter control logic for the synchronous and semi-synchronous modes. In the preferred implementation, this control logic is specified by programming for microprocessors in the channel adapters.

In FIG. **7**, a first step **401** is reached when the channel adapter receives a channel command from the host requesting data access to a volume. It is assumed that the host is not requesting direct access to a secondary (R2) volume in the data storage system containing the channel adapter. The host may request direct access to a secondary (R2) volume during recovery operations, which are described below. It is also assumed that the channel command is not in a chain of multiple channel commands. The chaining of multiple channel commands is described below with reference to FIG. **19**.

In the first step **401** of FIG. **7**, execution branches to step **402** for a read access. In step **402**, the channel adapter accesses configuration information, and continues to step **403** if the host is requesting access to a local volume. Preferably, a separate copy of the configuration information is stored in local memory in each of the channel adapters and link adapters. This configuration information identifies whether a volume is local, primary, or secondary, and for each primary or secondary volume, identifies the other volume in the remotely mirrored volume pair.

In step **403**, the channel adapter accesses the cache. If the data requested by the host is not in the cache, then the data is fetched by a disk adapter from disk storage in the data storage system, and loaded into the cache. Then, in step **404**, the channel adapter transmits the data and a device end signal to the host, and the channel adapter has finished the task of servicing the channel command.

If the host channel command is requesting data in the primary (R1) volume of a remotely mirrored pair, then execution branches from step **402** to step **405**. In step **405**, execution branches to step **403** unless the data storage system is in the synchronous mode. For modes other than the synchronous mode, the reading of data from a primary (R1) volume is normally similar to the reading of data from a local volume; in either case, the requested data is fetched without delay from the cache or disk in step **403**. Under the abnormal condition of the data being entirely absent from the data storage system due to a disk drive failure, however, a request for data access to a primary (R1) volume can be satisfied by obtaining the requested data from the secondary volume (R2) in the remote data storage system. The handling of such an abnormal condition is discussed below in connection with data recovery procedures.

In step **406**, when a remote write is not pending to the secondary (R2) of the requested mirrored volume, execution also branches to step **403** to fetch the requested data from the cache or disk. When a remote write is pending to the secondary (R2) of the requested mirrored volume, however, execution continues to step **407** to suspend the current read task until the remote data storage system acknowledges completion of the pending remote write. Preferably, tasks suspended while waiting for completion of a pending remote write are placed on a first-in first-out (FIFO) queue of suspended tasks, and when the remote data storage system acknowledges completion of the pending remote write, any waiting tasks in queue of suspended tasks are serviced in the order in which the tasks were placed in the queue. Once the remote data storage system acknowledges completion of the pending remote write, and no remote write to the secondary (R2) of the mirrored volume is pending, as tested in step

406, execution branches to step **403** to fetch the requested data from the cache or disk.

When the host has requested a write access, execution continues from step **401** to step **408**. In step **408**, execution branches to step **409** when the host has requested a write access to a volume that is local. In step **409**, data from the host is written to cache, and the track tables are updated to reflect that the old data on disk is invalid in view of the new data from the host, and that a write operation to disk is pending for the invalid track or tracks on disk.

Then in step **410**, a device end (DE) signal is returned to the host to signal completion of the write operation. The signaling of the completion of a write operation before the data is actually written to disk is a well-known technique called "fast write." Semiconductor random-access memory containing the write data is backed-up by a battery sufficient to power the memory and some disk drives while the write data is transferred to the disk drives in the event of a power failure.

When the host has requested a write operation to a volume defined as a mirrored volume pair, execution continues from step **408** to step **411**. In step **411**, execution continues to step **412** when a remote write to the secondary (R2) of the remotely mirrored volume is pending. In step **412**, the current write task is temporarily suspended, while awaiting receipt from the remote data storage system of acknowledgement of completion of the pending remote write, as tested in step **411**. When no remote writes to the secondary (R2) of the remotely mirrored volume are pending, execution branches from step **411** to step **414** in FIG. **8**.

In step **414** of FIG. **8**, the data from the host is written to the cache, and the track tables are updated to indicate that the track or tracks for the new data in disk for the primary (R1) volume are invalid and have a pending write operation to disk, and that the track or tracks for the new data are invalid in the secondary (R2) of the remotely mirrored volume and have a pending write to the cache in the remote data storage system. Due to the incorporation of the "fast write" technique of acknowledging a write to a secondary (R2) volume when the update is written to cache of the data storage system containing the secondary volume, the remote "invalid" and "write pending" status for the secondary (R2) volume in the track tables of the data storage system containing the corresponding primary (R1) volume refers to the status of the secondary (R2) volume in cache or on disk; in particular, the remote "write pending" status indicates a pending write over the link to the cache in the data storage system containing the secondary (R2) volume. When the "fast write" technique is used, it is still necessary, for carrying out the local destage or write back operation, for each data storage system to record, for each track or data record, an indication of whether a local destage operation is pending, and such a local destage operation is pending when the track or record is valid and is in cache but the disk drives do not have valid data for the track or record.

Next, in step **415**, the write data from the host is written to a first-in, first-out (FIFO) link transmission queue (**504** in FIG. **18**) for transmission by a link adapter to the remote data storage system. Preferably, the entries in the queue contain pointers to the data in cache. When a link adapter becomes available, it services this FIFO queue by transmitting the data identified by the entry at the head of the queue across the link to the remote data storage system.

Next, in step **416**, execution branches to step **417** when the data storage system is not in the synchronous mode. In step **417**, the channel adapter transmits a device end (DE) signal to the host, and execution continues to step **418**. Execution also continues to step **418** from step **416** when the data storage system is in the synchronous mode.

In step **418**, the current write task is suspended, until the remote data storage system has received the write data, written the data in its cache, and has acknowledged completion of the remote write operation. In the short distance option, the remote acknowledgement should be received just before a next remote write task sends data over the link, and therefore it may be feasible for the link adapter to poll for the remote acknowledgement. In the long distance option, the next remote write task may send data over the link well before the acknowledgement is received, so that receipt of the acknowledgement causes an interrupt re-activating the suspended write task. Once the data storage system receives the acknowledgement of completion of the remote write, as tested in step **419**, execution continues to step **420**. In step **420**, the track tables are updated to indicate completion of the remote write to the cache of the secondary (R2) volume in the remotely mirrored volume pair, so that the track or tracks of the new write data are valid in the secondary (R2) volume.

From the control flow in FIGS. **7** and **8**, it is clear that when a host writes data to a remotely mirrored volume, the following sequence of events takes place in the synchronous mode: data is written to the cache of the data storage system containing the primary (R1) volume (step **414**); an entry is placed in the FIFO link queue for transmission of the data to the data storage system containing the secondary (R2) volume (step **415**); the data storage system containing the secondary (R2) volume acknowledges receipt of the data (step **419**); the track tables are maintained (step **420**); and a device end (DE) signal is presented back to the host that initiated the write request (step **422**). In the synchronous mode, all accesses (reads and writes) to the remotely mirrored volume to which a write has been performed are suspended (steps **407** and **412**) until the write to the secondary (R2) volume has been acknowledged.

From the control flow in FIGS. **7** and **8**, it is clear that when a host writes data to a remotely mirrored volume, the following sequence of events takes place in the semi-synchronous mode: data is written to the cache of the data storage system containing the primary (R1) volume (step **414**); an entry is placed in the link FIFO queue for transmission of the data to the data storage system containing the secondary (R2) volume (step **415**); a device end (DE) signal is presented back to the host that initiated the write request (step **417**); the data storage system containing the secondary (R2) volume acknowledges receipt of the data (step **419**); and the track tables are maintained (step **420**). In the semi-synchronous mode, read access to the volume to which a write has been performed is allowed (steps **405**, **403**) while the write is in transit to the data storage system containing the secondary (R2) volume. A second write to the volume is not allowed (steps **411**, **412**) until the first has been safely committed to the secondary (R2) volume. Thus, a single secondary (R2) volume may lag its respective primary volume (R1) by only one write.

In the semi-synchronous mode, by presenting an earlier device end (DE) signal to the host (in step **417** instead of step **422**), it is possible that a write operation to a different volume, logically dependent on the write to the first volume, will be issued by a host operating system and data base management system. This presents no threat of data inconsistency in the data storage system, because the link transmission queue (step **415**) is managed on a FIFO basis; the data is transmitted over the link and processed by the remote data storage system in the order in which the data is loaded

into the link transmission queue. By inhibiting the link transmission queue from receiving any new entries (or switching all logically dependent volumes to synchronous mode), the remote data storage system will have a consistent set of data in its secondary (R1) volumes when all entries in the queue have been transmitted and written to the secondary (R2) volumes.

(4) Adaptive Copy—Write Pending

The adaptive copy—write pending mode transfers data from the primary (R1) volume to the secondary (R2) volume and does not wait for receipt acknowledgment or synchronization to occur. This mode keeps the data in the secondary (R2) volume as current to the data in the primary (R1) volume as possible.

In the adaptive copy—write pending mode, the data storage system containing the primary (R1) volume informs the host of successful completion after each write. When the data storage system containing the primary (R1) volume has valid data in cache for a remotely mirrored pair, it destages that data to the primary (R1) volume, and a link adapter transfers the data over an available link path to the cache in the data storage system containing the secondary (R2) volume. This data transfer occurs while the data storage system containing the primary (R1) volume continues to process input/output commands. All writes for remotely mirrored pairs accumulate in the cache of the data storage system containing the primary (R1) volume as write pendings until the data can be successfully written to the secondary (R2) volume and the disk storage of the primary (R1) volume.

Should a problem arise with data transfer to the data storage system containing the secondary (R2) volume or the data storage system is unable to write the data to the disk storage of the primary (R1) volume, the data storage system containing the primary (R1) volume retains that data in its cache until the problem can be corrected and the data is successfully written to the secondary (R2) volume and the disk storage of the primary (R1) volume.

The adaptive copy—write pending mode is responsive to the user-configurable skew parameter (maximum allowable write pending tracks) for each primary (R1) volume configured for this mode.

When the skew parameter is reached, the remote mirroring operational mode switches to the pre-determined synchronous or semi-synchronous mode for the remotely mirrored (R1, R2) pair. When the number of write pending tracks for the secondary (R2) volume drops below the skew value, the remote mirroring operational mode switches back to the adaptive copy—write pending mode for the remotely mirrored pair. The skew value may range from 1 to 65,535, and has a default value of 65,535.

The adaptive copy—write pending mode can be enabled or disabled for one remotely mirrored volume pair, all remotely mirrored pairs, or a range of remotely mirrored pairs during configuration from a user interface at the service processor, or during operation of the optional host remote mirroring software. When the adaptive copy—write pending mode is disabled, the remotely mirrored pairs operate in the pre-determined synchronous or semi-synchronous operational mode for the remotely mirrored (R1, R2) logical volume pair.

The adaptive copy—write pending mode is designed to have little or no impact on performance between the host and the data storage system containing the primary (R1) volume and to offer protection against loss of data in the unlikely event that a primary (R1) or secondary (R2) volume fails or all link paths are lost. The adaptive copy—write pending mode is ideal for situations when a large amount of data must be transferred to remote devices and performance must not be compromised at the local site; or, for situations where it is not necessary for remotely mirrored volumes to be synchronized at all times. The remotely mirrored volumes are allowed to drift out of synchronization for higher performance, but they stay within a pre-determined number of write pendings with protection against data loss.

The adaptive copy—write pending mode of operation is convenient in situations where the write activity caused by heavy batch loads or data reorganization can severely impact performance due to the data storage systems maintaining a full synchronous state. In these cases, the skew parameter should be set to its maximum, default value (65,535). Then the adaptive copy—write pending mode should be enabled for all remotely mirrored pairs, and data transfers begin between the primary and secondary logical volumes.

In many systems, it is not necessary that all primary and secondary logical volumes be fully synchronized. Logical volumes requiring full synchronization are configured for synchronous or semi-synchronous operation. Those logical volumes that do not require full synchronization are configured for the adaptive copy write pending mode and a low skew value (i.e., 100). When data transfers begin, such a remotely mirrored pair operates in the adaptive copy—write pending mode until "bursts" of high write activity cause the number of write pending operations to exceed the low skew value, and the remotely mirrored pair is forced to the pre-determined synchronous or semi-synchronous mode. When the number of write pending operations for the secondary (R2) volume drops below the skew value, the remotely mirrored pair returns to the adaptive copy—write pending mode. Any new writes for the pair accumulate in cache as write pendings. Synchronization will occur when the remotely mirrored pair switches to the pre-determined synchronous or semi-synchronous mode.

For some applications, it is desirable to disable the adaptive copy—write pending mode for specified volumes. When the data storage system containing the primary (R1) volume(s) receives a command to disable the adaptive copy—write pending mode, it does not achieve a synchronous or asynchronous state immediately. The remotely mirrored pairs with write pendings continue to be transferred to the secondary volumes (R2) in the adaptive copy—write pending mode until all writes prior to the disable command have been transferred to the respective secondary (R2) volumes. Then the remotely mirrored pairs achieve the synchronous or semi-synchronous state, and writes subsequent to the disable command are handled in the pre-determined remote mirroring mode (synchronous or semi-synchronous).

(5) Adaptive Copy—Disk Mode

The adaptive copy—disk mode transfers data from the primary (R1) volume to the secondary (R2) volume and does not wait for receipt acknowledgment or synchronization to occur. This mode is intended to be a temporary operating mode and has little impact on performance between the host and the data storage system containing the primary (R1) volume. This operational mode keeps the data in the secondary (R2) volume as current to the data in the primary (R1) volume as possible.

In this mode, the data storage system containing the primary (R1) volume acknowledges all writes to the primary (R1) volume as if they were to a local volume. The data storage system containing the primary volume accumulates the new data on the primary (R1) volume marking it as "invalid tracks" for the secondary (R2) volume. Synchroni-

zation of the primary (R1) and secondary (R2) volumes is reported to the data storage system containing the primary (R1) volume only. The data storage system does not issue a "service alert" message to the host to notify it of this event.

The adaptive copy—disk mode can be enabled or disabled for one remotely mirrored volume pair, all remotely mirrored volumes, or a range of remotely mirrored volumes, using commands entered at the service processor at the data storage system containing the primary (R1) volume, or using the host remote mirroring software. When the adaptive copy—disk mode is disabled, the data storage systems operate in the pre-determined synchronous or semi-synchronous mode for the mirrored volume pair (R1, R2).

The adaptive copy—disk mode uses the user-configurable skew parameter (maximum invalid tracks), that, when its value is exceeded for a remotely mirrored volume pair, causes the mode to switch to the pre-determined synchronous or semi-synchronous mode for the remotely volume mirrored pair. (Therefore, in any case, all write operations between the remotely mirrored volumes are fully synchronized.) When the number of invalid tracks for a secondary (R2) volume goes below the value specified by the skew parameter, the operating mode switches back to the adaptive copy—disk mode for that volume pair. The skew value, for example, may range from 1 to 999,999, and the default value is the maximum value of 999,999.

The adaptive copy—disk mode is designed for situations requiring the transfer of large amounts of data to remote devices without loss of performance. Because the mode cannot fully guard against data loss should a failure occur, this mode is recommended for temporarily transferring a bulk of data to secondary (R2) volumes and then switching to either synchronous or semi-synchronous mode without any adaptive copy, or with adaptive copy—write pending mode (if some lack of synchronization between the remotely mirrored volume pairs can be tolerated) to ensure full data protection.

The adaptive copy—disk mode is convenient in situations where it is necessary to either migrate a data center from one location to another or create a mirror image of the data in a separate location without a disruption in operation. Without the use of the adaptive copy—disk mode, the write activity caused by the movement of large amounts of data could severely impact performance, particularly in either the synchronous or semi-synchronous mode. In this example, the large data transfer is only a temporary condition. The skew parameter set to its maximum, default value, and the adaptive copy—disk mode should be enabled for all remotely mirrored pairs. When the data migration or data copy operation has completed (or is near completion), the mode should be switched to the synchronous, semi-synchronous, or adaptive copy—write pending mode, depending on the degree of synchronization needed between the remotely mirrored volume pairs.

(6) Channel Adapter Control Logic for the Adaptive Modes

To handle the adaptive modes, a few steps in the flowchart of FIG. **7** are modified. FIG. **9** shows the modifications. In particular, steps **431** to **434** of FIG. **9** are substituted for steps **406** to **407** of FIG. **7**, and steps **431** to **434** of FIG. **9** are also substituted for steps **411** to **412** of FIG. **7**. It should be apparent that steps **432** and **433** of FIG. **9** are inserted between steps **406** and **407** of FIG. **7** so that when the primary mode is the synchronous mode and a remote write to the volume is pending, the current read task is not suspended in the adaptive mode (step **432**) until the number of remote write pending tracks reaches the value of the skew parameter. In a similar fashion, steps **432** and **433** of FIG. **9** are inserted between steps **411** and **412** of FIG. **7** so that when a remote write to the volume is pending, the current write task is not suspended in the adaptive mode (step **432**) until the number of remote write pending tracks reaches the value of the skew parameter.

In order to determine whether or not any remote write is pending to a secondary (R2) volume and if so, to determine whether the number of remote write pending tracks has reached the value of the skew parameter, the data storage system maintains in cache an "invalid tracks" count associated with each logical volume. The "invalid tracks" counts for the volumes are set to zero during the initial configuration of the system, and an "invalid tracks" count of zero indicates that the secondary (R2) volume is fully synchronized with its respective primary (R1) volume. The data storage system containing the primary (R1) volume increments the "invalid tracks" count each time a write operation for the secondary (R2) volume is placed in the FIFO link transmission queue for transmission over the communication link to the data storage system containing the secondary (R2) volume (step **415** of FIG. **8**), and decremented each time that the data storage system containing the primary (R1) volume receives an acknowledgement of completion of the write operation in the remote data storage system (steps **419** to **420** in FIG. **8**). Therefore, in step **431** of FIG. **9**, the "invalid tracks" count for the secondary (R2) volume is compared to zero, and a remote write to the volume is pending if the "invalid tracks" count is not zero. In step **433** of FIG. **9**, the "invalid tracks" count for the secondary (R2) volume is compared to the skew value, and if the "invalid tracks" count is greater or equal to the skew value, then the number of remote write pending tracks is greater or equal to the skew value.

F. Data Consistency and Host Access to Secondary (R2) Volumes

Unless the secondary (R2) volumes are synchronized to the primary (R1) volumes, the data in the secondary volumes may not be consistent. If a local host processor is writing to the primary (R1) volumes at the same time that a remote host processor is reading the corresponding secondary (R2) volumes, the remote processor may read inconsistent data. For example, the local processor may be executing a transaction that transfers $10.00 of a client's funds between two of the client's accounts. The local processor executes a first write that debits the first account by $10.00, and executes a second write that credits the second account by $10.00. If the remote processor reads the secondary volume when only the first write has been written in the secondary volume, and then computes the client's total funds, it will find a loss of $10.00. It is a user responsibility to ensure that the use to which such read-only data is put is consistent with the possibility of data inconsistency. In general, the secondary (R2) volumes should be accessed only after synchronization is achieved by suspending remote mirroring, and waiting until all pending remote writes have been transferred to the secondary volumes.

If a remote host processor should perform a read/write access on an inconsistent dataset, not only is it possible that the host processor will obtain an inconsistent result, but also the dataset may become further corrupted and made worthless. Unfortunately, in the situation of a disaster that interferes with the data storage system containing the primary (R1) volumes, the best copy of the dataset available may reside in the secondary volumes, and the user may be faced with the difficult decision of whether the dataset should be used for a read/write application, discarded, or in some way repaired with whatever information is available about the past history of the dataset.

It is also possible that an automatic recovery technique may further corrupt the dataset in the secondary (R2) volumes in the case of a "rolling disaster." In the rolling disaster, a remote mirroring relationship exists between the two data storage systems. All links break between the sites, and application processing continues using the primary (R1) volumes. The links are restored, and resynchronization commences by copying data from the primary (R1) volumes to the secondary (R2) volumes. Before resynchronization is finished, however, the primary volumes are destroyed, and the attempt at resynchronization has further corrupted the secondary volumes.

Although the probability of a rolling disaster is quite low, the extent of data loss can be severe where application processing continues for some time against the primary volumes. In this situation, it is not practical to record a log of every single write to the primary volume. Instead, as described above for the adaptive copy modes, only the data for the most recent write to each track is maintained in the primary volume, together with a record of the particular "invalid tracks" that need to be written to the secondary volumes to achieve synchronization. The resynchronization activity is not time-based, but rather is a process of copying those tracks that have changed during the outage of the link. Therefore, the process of attempting to bring the secondary volumes to the consistent state of the primary volumes existing when the link is re-established at first tends to further corrupt the secondary volumes, which were nearly in a consistent state at the time of the initial failure of the link.

The preferred embodiment of the invention addresses these problems in a number of ways. Each write request transmitted over the link between the data storage systems includes not only the data for the track in the secondary (R2) volume to be updated but also the current "invalid track" count for the secondary (R2) volume as computed by the data storage system containing the corresponding primary (R1) volume. Therefore, once a disaster occurs that destroys the data storage system containing the primary volume, the data storage system containing the secondary (R2) volume has an indication of the degree of consistency of the secondary (R2) volume. The "invalid tracks" count can be used to determine an appropriate recovery operation for the volume, and can be used to selectively restrict read/write access to the volume when the user decides that synchronization should be required for a write access.

The preferred embodiment of the invention also gives the user various features to avoid the rolling disaster by inhibiting automatic recovery. These features include a "volume domino mode" that inhibits automatic access to one volume of a mirrored volume pair when the other volume is inaccessible, and a "links domino mode" that prevents access to the two volumes in a mirrored volume pair when all links fail. Moreover, alternative recovery procedures are provided for responding to an all-links failure in order to minimize the extent of damage caused by the rolling disaster.

G. States of Remotely Mirrored Volumes

In the preferred implementation of remote mirroring, primary (R1) and secondary (R2) volumes have particular states that govern host access. A primary (R1) volume is in either a ready state or a not ready state. A secondary (R2) volume is in either a not ready state, a read-only state, or a read-write state. The state of the primary (R1) volume governs access to the primary volume by a host connected to a channel adapter of the data storage system containing the primary volume. The state of the secondary (R2) volume governs access to the secondary volume by a host connected to a channel adapter of the data storage system containing the secondary volume. In other words, the volume state is seen by the host connected to the storage system containing the volume.

The preferred embodiment of the invention defines a set of states for the primary (R1) and secondary (R2) volumes in order to control host access to the volumes. These states are set by flags in volume tables in the cache memory of the data storage system containing the respective primary (R1) or secondary (R2) volumes.

(1) Primary (R1) Volume States

(a) Primary Volume Ready

In this state, the primary (R1) volume is online to the host and available for read/write operations. This is the default primary (R1) volume state.

(b) Primary Volume Not Ready

In this state, the primary (R1) volume responds "intervention required/unit not ready" to the host for all read and write operations to that volume. The host will also be unable to read from or write to the secondary (R2) volume associated with that volume.

(2) Secondary (R2) Volume States

(a) Not Ready State

In this state, the secondary (R2) volume responds "intervention required/unit not ready" to the host for all read and write operations to that volume. This is the default secondary (R2) volume state.

(b) Read-Only State

In this state, the secondary (R2) volume is available for read-only operations.

(c) Read/Write State

In this state, the secondary (R2) volume is available for read/write operations.

H. "Sync Required" Attribute for Secondary Volumes

In the event of a disaster that renders all equipment at one site non-operational, secondary (R2) volumes on the mirrored data storage system at the remote site can be made available to a remote host for read-only or read/write operations by issuing commands at the service processor of the data storage system containing the secondary (R2) volumes, or by issuing commands to host remote mirroring software in the remote host. In its default configuration, all secondary (R2) volumes are not ready to the remote host. (These secondary (R2) volumes can also be configured for a read-only state.)

Each secondary (R2) volume has a configurable attribute, "sync required", for selectively preventing a secondary (R2) volume from becoming ready to the remote host if a state change is attempted while it is not synchronized with its primary (R1) volume. If the "sync required" attribute is not enabled, then all specified state changes to the secondary (R2) volume take effect when requested. If the "sync required" attribute is enabled, and if the secondary (R2) volume is not synchronized with the primary (R1) volume and not ready to the remote host at the time of the failure, then the non-synchronized secondary (R2) volume will remain not ready. Regardless of the state of the "sync required" attribute, if the secondary (R2) volume were synchronized with the primary (R1) volume and not ready to the remote host at the time of the failure, then the secondary

(R2) volume will assume the specified change of state (read-only or read/write enabled).

Secondary (R2) volumes configured as read-only with the "sync required" attribute enabled can work in their read-only state with the remote host regardless of their synchronization state with the primary (R1) volumes. If an attempt is made to change the state of a secondary (R2) volume to read/write enabled and the secondary (R2) volume is synchronized with the primary (R1) volume at the time of the failure, the state change occurs. If the secondary (R2) volume was not synchronized with the primary (R1) volume, then the state change does not occur and the data storage system reports the non-synchronous state to the remote host.

Turning now to FIG. **10**, there is shown a flowchart of the control logic in a channel adapter for restricting the ability of a host to access a secondary (R2) volume in the fashion described immediately above. In a first step **440**, execution continues to step **441** if remote mirroring to the secondary (R2) volume has been suspended. When remote mirroring to the secondary (R2) volume has been suspended, writes to the secondary (R2) volume are not accepted from the data storage system containing the corresponding primary (R1) volume. In step **441**, execution branches to step **442** if the "sync required" attribute is set for the secondary (R2) volume. In step **442**, the requested state change is performed. If the "sync required" attribute is not set for the secondary (R2) volume, then execution continues from step **441** to step **443**. In step **443** execution branches to step **442** if the secondary volume (R2) is synchronized with its corresponding primary volume (R1). In other words, execution branches from step **443** to step **442** if the "invalid tracks" count for the secondary volume is zero. If the secondary (R2) volume is not synchronized with its corresponding primary volume (R1), then execution continues from step **443** to step **444**. In step **444**, execution branches to step **445** if the host is requesting a state change to a read-write state. If so, then in step **445** the state of the secondary (R2) volume is set to "not ready" and the channel adapter reports to the host that the secondary (R2) volume is "not ready." If in step **444** the host was not requesting a state change to read-write, then execution continues from step **444** to step **442** to perform the state change to either "not ready" or read-only, as requested by the host.

If in step **440** remote mirroring was not found to be suspended to the secondary (R2) volume, then execution branches to step **444** in order to prevent any state change to read-write. However, a state change to read-only or "not ready" is permitted when remote mirroring to the secondary (R2) volume is occurring.

After the state of the secondary volume is set in steps **442** or **445**, execution returns.

I. Recovery

In the preferred implementation of remote mirroring, a number of different recovery procedures are available to respond to various device and system failures or outages. The recovery procedure that is used should depend on the kind of failure or outage, the degree of host or user involvement that is deemed necessary or appropriate, the type of datasets or applications that could be affected, and the desired degree of data integrity.

In general, a recovery operation is performed if either all links are inoperative, a primary volume is inaccessible, or a secondary volume is inaccessible. If only some of the link paths are inoperative, the remote mirroring operations may continue on the remaining link paths. If all of the links are inoperative, then either an application may continue without mirroring new write data, or an application may be interrupted until at least one link is restored. If a primary volume is inaccessible, its secondary volume can be accessed, and the primary volume can be recovered by copying from its respective secondary volume. If a secondary volume is inaccessible, it can be recovered by copying from its primary volume. However, these typical scenarios can become more complicated if a second failure affecting a mirrored volume pair occurs before the completion of recovery from the first failure. Therefore, in the preferred implementation of remote mirroring, a number of different recovery methods are provided, as will be described below.

When the user is involved in recovery, the user may access the data storage system service processor to obtain the status of remotely mirrored volumes and then move control between the data storage systems during the disaster recovery process. The host remote mirroring software may also be accessed by the user or a host application in order to obtain status and directly control disaster recovery.

(1) Data Loss

The remote mirroring mode at the time of a storage system failure or outage will determine the minimal amount of data loss when recovery is finished.

In the synchronous operational mode, no data need be lost in the event of a disaster. The data storage system aborts the input/output currently in progress, but does not acknowledge this action to the host. This data is not considered lost.

In the semi-synchronous mode, the minimal amount of data lost depends on the number of transactions enroute to the secondary volumes when a disaster occurs. If only the host central processing units or power attached to the data storage system containing primary (R1) volumes are lost, no data loss occurs. If the entire site is lost, including all link paths, all transactions enroute are lost. In a worst case scenario, one input/output per volume will be lost.

In the adaptive copy modes, the worst case scenario is loss of an entire data storage system containing primary (R1) volumes. All write data pending transmission to the remote data storage system is lost.

(2) Automatic Recovery from Disk Drive Failure

In most cases, an automatic recovery mode is suitable for recovering from a disk drive failure. A user or host application, however, may wish to ensure that an application is always interrupted immediately in case of a disk drive failure, for example, in order to maintain primary and secondary volumes that are always in synchronization. In this case, a volume domino mode should be used, as further described below.

In the automatic mode, if the data is not available in cache during a read operation, then the data storage system reads the data from the primary (R1) volume. If a data check occurs on this device, the data storage system automatically reads the data from the secondary volume. Should one volume in the remote mirrored pair fail, the data storage system automatically uses the other volume without interruption. The data storage system notifies the host with an "environmental data present" error, and notifies a customer support center of the data storage system manufacturer with an error code designating that the primary or secondary volume has failed. No user intervention is required. When the defective disk device is replaced, the data storage system re-synchronizes the mirrored pair, automatically copying data to the new disk. In a similar fashion, when an outage occurs, e.g., to perform maintenance activity on a remotely mirrored volume for an extended period of time, the primary (R1) volume tracks all updates to its secondary (R2) volume and copies the updated tracks to the other volume when the remotely mirrored pair is re-established. The time it takes to

resynchronize the mirrored pair depends on the link path activity, input/output activity to the volume, and the disk capacity.

(3) Automatic Recovery for Adaptive Copy—Write Pending

Should disk storage containing the primary (R1) volume fail, the data storage system having the primary (R1) volume temporarily suspends the adaptive copy—write pending mode, destages all write pendings for the secondary (R2) volume at the highest priority, and continues input/output operations with the secondary (R2) volume. When the primary (R1) volume is replaced, the data storage system resynchronizes the remotely mirrored pair and re-enables the adaptive copy—write pending mode. No data is lost because the data storage system containing the primary (R1) volume always retains the data in its cache until it can destage the data to the disk storage for the primary (R1) volume.

Should a secondary (R2) volume fail, the data storage system containing the primary volume (R1) continues to mark new write data as write pendings to invalid tracks in the secondary (R1) volume until the secondary (R2) volume can be replaced. When the defective device is replaced, the data storage system resynchronizes the remotely mirrored pair and re-enables the adaptive copy—write pending mode.

(4) Automatic Recovery for Adaptive Copy—Disk

Should a primary (R1) volume fail, all data not already written to the secondary (R2) volume is lost. When the primary (R1) volume is replaced, the data storage system containing the primary volume (R1) resynchronizes the remotely mirrored volume pair and re-enables the adaptive copy—disk mode.

Should a secondary (R2) volume fail, the data storage system containing the primary (R1) volume marks all pending writes and any new data as invalid tracks until the secondary (R2) volume can be replaced. When the defective device is replaced, the data storage system resynchronizes the remotely mirrored pair and re-enables the adaptive copy—disk mode.

(5) Dynamic Sparing Option

A dynamic sparing option for remote mirroring reserves disk drives as standby spares for primary (R1) volumes, secondary (R2) volumes, or both types of volumes. These standby spares are not user-addressable. The dynamic sparing option, when enabled, determines when a primary (R1) or secondary (R2) volume is about to fail and copies the contents (all volumes) of the disk drive on which that volume resides to an available spare (designated for that type of volume) without any interruption in processing. The data storage system notifies the host of this event with an "environmental data present" error, and also notifies the customer support center of the storage system manufacturer so that physical replacement of the failing disk drive can be scheduled. The data storage system uses the spare until the disk drive on which the original logical volume resided can be replaced. The dynamic sparing option maintains data availability without impacting performance.

The dynamic sparing option is most easily implemented when it is restricted to physical disk drives that have all primary (R1) volumes or all secondary (R2) volumes. Also, for a physical disk drive having all secondary (R2) volumes, the implementation of dynamic sparing is most easily implemented if the corresponding primary (R1) volumes do not reside on multiple data storage systems in the data processing system.

When the dynamic sparing option has been enabled during configuration and the data storage system determines during operation from error statistics or reporting that a drive failure is possible or a drive has become totally unavailable, the data storage system looks for an available dynamic spare disk drive that can be substituted for the failing or failed disk drive. The storage system dynamically copies all data from the "good" disk drive in the remote pair across the links to the available spare. The data storage system continues to process host input/output requests at the highest priority while this copy operation takes place to minimize the effect on performance. When the copy operation completes, the data storage system notifies the host and the customer support center of the event.

When the failing or failed disk drive is physically replaced, the data storage system makes the volume(s) on the new disk drive ready, disables the spare, and dynamically copies the contents of the other volume in the remotely mirrored pair to the new disk drive. The data storage system returns the spare to its pool, making it available if another remotely mirrored volume (primary (R1) or secondary (R2)) fails in the future.

In summary, the dynamic sparing option increases protection of all remotely mirrored volumes from loss of data, automatically activates the spare volume without interruption prior to loss of access of a potentially failing volume, ensures that the contents of the spare are identical to the contents of the original, and resynchronizes a new disk drive with the dynamic spare after replacement or repair of the defective disk drive is complete. The dynamic sparing is transparent to the host and requires no user intervention.

(6) Link Failure

Normally at least two link paths exist between two remotely mirrored data storage systems. Should a link path fail, communication continues uninterrupted on the remaining link path. The data storage system sends an error message to the local host identifying the failed link path. The Data Switch Model 9800 MAX, when used in the link paths, has a configuration option that automatically switches link paths when it detects a T3 circuit failure. In order to report link path failures to the host, this configuration option should be disabled.

If all link paths fail between the data storage systems, no data can be written to the secondary (R2) volumes in either data storage system. In an automatic link recovery mode, which is a default configuration, writes from the local host continue to the primary (R1) volumes. All updated tracks are marked so that when the link paths are restored, the data storage system will begin transferring the marked data to the secondary (R2) volumes. In the adaptive copy—write pending mode, all data for the secondary (R2) volume(s) accumulates as invalid tracks in the cache of the data storage system containing the primary (R1) volume(s). In the adaptive copy—disk mode, all data for the secondary (R2) volume(s) accumulates as invalid tracks in disk storage of the data storage system containing the primary (R1) volume (s). In a domino recovery mode, however, the primary volumes become "not ready" to the local host whenever all links fail, in order to maintain synchronization between data storage systems.

(7) Domino Modes

There are two domino modes. The first is a volume domino mode, that can be defined for individual mirrored volume pairs, a range of mirrored volume pairs, or all mirrored volume pairs. The second is an "all links" domino mode, applicable to all mirrored volume pairs.

The default state for a primary volume is the ready state.

If the primary (R1) volume fails, the host will continue to see that volume as "ready", and all reads and/or writes will continue uninterrupted with the secondary (R2) volume in that remotely mirrored pair. However, a domino mode can make the primary volume "not ready."

(8) Volume Domino Mode

When enabled for a mirrored volume pair, this mode causes the primary (R1) and secondary (R2) volumes to become not ready to a host if either one of the primary (R1) and secondary (R2) volumes become inaccessible for remote mirroring, for example, due to a disk drive failure or an "all links" failure preventing data transfer between the primary (R1) and secondary volumes (R2). The data storage system responds "intervention required/unit not ready" to a host on all accesses to the "not ready" volume.

To resume remote mirroring after the fault has been corrected, the primary (R1) volume must be made ready again by manual entry of commands to the service processor of the data storage system, or by commands to the host remote mirroring software. If, however, the primary (R1) or secondary (R2) volume or the links remain down, the primary (R1) volume will immediately become not ready again until the cause of the failure is resolved. If the cause of the failure is resolved and the primary (R1) volume is made ready again, the data storage system containing the primary (R1) volume renotifies its local host that the volume is again ready and brings it online.

The volume domino mode can be enabled together with the synchronous mode enabled and adaptive copy modes disabled to guarantee synchronization between primary (R1) and secondary (R2) volumes in a mirrored volume pair. This combination offers the greatest protection from the "rolling disaster" scenario described above.

(9) All-Links Domino Mode

When enabled, this mode causes all primary (R1) and secondary (R2) volumes to become not ready if all links fail. When at least one link is reestablished, the primary (R1) volumes must be made ready again by manual entry of commands to the service processor of the data storage system, or by commands to the host remote mirroring software. If, however, the all links remain down, the primary (R1) volumes will immediately become not ready again until a link is established. Once a link is established and the primary (R1) volumes are made ready again, the data storage system containing the primary (R1) volumes renotifies its local host that the primary (R1) volumes are again ready and brings them online.

The all-links domino mode is particularly useful for a cluster of host processors in an open systems environment that uses the link between the processors for sharing data. For example, the shared data would be written by a local host to a primary (R1) volume, transmitted over the link to a secondary (R2) volume, and read by a remote host having read-only access to the secondary (R2) volume. In this situation, it may be desirable to interrupt the application when there is no longer a link. Setting the volumes to a volume domino mode might be too restrictive in this situation, because the shared data could still be written across the link to the secondary (R2) volume even if the corresponding primary volume (R1) would be unavailable.

(10) Channel Adapter Control Logic for Domino Modes

Turning now to FIG. **11**, there is shown a flowchart of channel adapter control logic for implementing the domino modes when remote mirroring is enabled. In a first step **451**, execution branches to step **452** when there has been a simultaneous failure of all links, preventing the remote mirroring or access of data. In step **452**, execution branches to step **453** if the data storage system containing the channel adapter is in the all-links domino mode. In step **453**, the channel adapter presents an "intervention required" signal to the host presently connected to the channel adapter.

The "intervention required" signal is processed by the operating system of the host. For example, the host operating system displays an error message to the system operator, so that the system operator may perform a manual recovery operation using the host remote mirroring software, as further described below. The host operating system may also check whether the channel adapter was servicing an application program at the time of the "intervention required" signal, and if so, then the host operating system checks whether the application program has defined an error handling interrupt routine. If the host operating system finds an error handling interrupt routine for the application, then the host operating system invokes the error handling interrupt routine. The optional error handling interrupt routine may prevent the application from performing further database activity requiring critical database backup, and may save application information useful for a recovery operation.

If step **451** finds that all links have not failed simultaneously, or if step **452** finds that the data storage system is not in the "all-links" domino mode, then execution continues in step **454**. In step **454**, execution branches to step **455** if there is a failure to complete a write operation to both the primary (R1) and secondary (R2) volumes of a mirrored volume pair. In this situation, it is not possible to complete a write operation to the primary (R1) volume or secondary (R2) volume without maintaining synchronization between these volumes. In step **455**, execution branches to step **453** if the data storage system is in the "volume domino mode" for the remotely mirrored volume pair. If the data storage system is not in the "volume domino mode" for the remotely mirrored pair, then execution continues to step **456**. In step **456**, execution branches to step **453** if neither the primary volume (R1) nor the secondary volume (R2) are accessible, because in this case, the write operation has not been completed to either volume. If one of the primary (R1) or secondary (R2) volumes is accessible, then in step **457** the write operation is completed with the accessible volume.

If step **454** found that there was not a failure to complete a write operation to both the primary (R1) and secondary (R2) volumes, then execution continues to step **458**. In step **458**, execution branches to step **455** if there was a failure to read a primary (R1) volume. Although a failure to read a primary volume will not in and of itself cause a loss of synchronization between the primary (R1) and secondary (R2) volumes of a remotely mirrored volume pair, such a loss could occur, or become more pronounced, by the time of a following write operation. Therefore, execution branches to step **455** so that if the volume domino mode is not enabled for the primary (R1) volume, then an "intervention required" signal will be presented to the host in step **453** to begin a recovery operation as soon as possible. If, however, the domino mode is not enabled for the primary (R1) volume, and its corresponding secondary (R2) is found to be accessible in step **456**, then in step **457** the read operation is completed by reading the secondary (R2) volume.

If step **458** found that there was not a failure to read the primary (R1) volume, then execution continues to step **459**. In step **459**, execution branches to step **455** if there was a failure to read a secondary (R2) volume. In other words, the secondary (R2) volume was in its read-only state but the read failed, so that the secondary volume would also be unavailable for a write operation during remote mirroring. Again, such a failure to read a the secondary volume will not in and of itself cause a loss of synchronization between the primary (R1) and secondary (R2) volumes of a remotely mirrored volume pair, but such a loss could occur, or become more pronounced, by the time of a following write operation. Therefore, execution branches to step **455** so that if the

volume domino mode is not enabled for the primary (R1) volume, then an "intervention required" signal will be presented to the host in step **453** to begin a recovery operation as soon as possible. If, however, the domino mode is not enabled for the secondary (R1) volume, and its corresponding primary (R2) is found to be accessible in step **456**, then in step **457** the read operation is completed by reading the primary (R1) volume.

(10) Host Failure

If only the CPU(s) at the site are lost, no data loss occurs in any remote mirroring operational mode for data already in cache at the data storage system. The data storage system containing the primary (R1) volume transfers any pending write operations to the data storage system containing the secondary (R2) volume without interruption.

(11) System-Based Recovery from the Site Failure

When a disaster at a local site renders all equipment non-operational, all link paths between the local data storage system and a remote mirrored data storage system fail. Secondary (R2) volumes cannot be updated and no data can be written to primary (R1) volumes on the data storage system at the local site, although writes can continue to primary (R1) volumes on the data storage system at the remote site. The remote data storage system marks all updated tracks on the primary (R1) volumes so that when the link paths are restored, the two data storage systems automatically resynchronize.

When the data storage system at the local site is ready to be brought back online, recovery can be performed by setting all channel interfaces to online, and powering-up the local data storage system. The local and remote data storage systems begin synchronizing. When the links synchronize, the primary (R1) volumes begin transferring data to the secondary (R2) volumes. The length of time it takes to resynchronize a full volume depends on the level of activity on the links, the level of activity on the data storage systems, the number of updated tracks (i.e., write pendings or invalid tracks) that need to be copied, link distances between data storage systems, and the size of the volume. The primary (R1) volumes must be in the enabled state for resynchronization to occur. The data storage system sends an operator message to its host when a volume has resynchronized.

(12) Application-Based Recovery

System-based recovery from a total failure of a primary (R1) volume might not be successful due to the "rolling disaster" scenario. There are, however, application-based recovery techniques that can adapted for recovery in the "rolling disaster" scenario.

One well-known application-based recovery technique, used extensively in transaction processing systems, is to maintain a log file of all writes ("before" or "after" images) to a data file. To ensure recovery, data is always written to the log file before it is written to the data file. The log file may contain a number of different versions of data written to the same location or track in the dataset. At any given time, however, the data file contains only one version of the data at any given location or track. If the dataset volume were to become inaccessible, then recovery would consist of (1) restoring the most recent image copy of the data, and (2) applying all logs to that data, thus making the data current. If the log file volume were to become inaccessible, then recovery would consist of (1) allocating a new log file, and (2) taking a current copy of the image data.

In a preferred implementation, as shown in FIG. **12**, the application **291** maintains the log file on a remotely mirrored volume pair **291**, **293** and the data file **292**, **294** on a remotely mirrored volume pair **295**, **296** in the data processing system **210**. The degree of synchronization between the primary volumes **295** and secondary volumes **296** is selected to guarantee that new data is written to the secondary (R2) log file **293** before the new data is written to the secondary (R2) data file **294**. Therefore, the "rolling disaster" scenario is avoided.

The synchronous or semi-synchronous modes, without adaptive copy, will guarantee that data is written to the secondary (R2) copies of the log file **293** and the data file **294** in the same order that the host writes data to the primary (R1) copies **291**, **292**. Therefore, use of the synchronous or semi-synchronous modes, without adaptive copy, would guarantee that new data is written to the secondary (R2) copy of the log file **293** before the new data is written to the secondary (R2) copy of the data file. However, a less restrictive method is for the application to synchronize the secondary (R2) log file volume **293** just before each transmission of new log file data from the application to the primary data storage system, and to synchronize the secondary (R2) data file volume just before each transmission of the new data file updates from the application to the primary data storage system **214**. This less restrictive method ensures that cache overwrite cannot disrupt the sequencing of the log and data file updates in the FIFO link transmission queue.

Turning now to FIGS.**13**A and **13**B, there is shown an example of a recovery procedure for the system of FIG. **12**. If there is a primary system failure such as a complete destruction of the primary data storage system **214**, then in the first step FIG. **13**A, the host operating system interrupts the application **292**, and the application initiates an application-based recovery program to recover from the secondary (R2) copies of the log file **293** and the data file **294**. In step **643**, the application inspects time stamps, sequence markers, or beginning/end of file markers in the secondary (R2) copies of the files **293**, **294** to determine which one of the two files was last written to. The file last written to can be assumed to be corrupted. If the log file **293** were corrupted, then in step **645** it is discarded and a new secondary (R2) log file is allocated, because the secondary (R2) data file **294** is intact. If the log file **293** were not corrupted, then in step **644** the log file **293** is used to recover the data file **294** by applying to the data file the changes recorded in the log file.

If in step **641** the primary data storage system **214** has not failed, then in step **646**, execution branches to step **647** if a primary (R1) volume **295** has failed. In this case, the primary data storage system **214** performs automatic recovery in step **647** by copying the secondary (R2) volume **296** to the primary (R1) volume.

If in step **646** a primary (R1) volume **295** has not failed, then in step **646**, execution branches to step **649** if the secondary (R2) volume **296** has failed. In this case, the primary data storage system **214** performs automatic recovery in step **649** by copying the primary (R1) volume **295** to the secondary (R2) volume **296**, to restore the secondary (R2) volume **296**.

If all links are lost between the primary and secondary data storage systems **214**, **246**, then processing with the primary (R1) file copies can be suspended until a link is re-established. When the link is re-established, the secondary (R2) file copies can be restored by transferring the pending secondary write data over the link. If the entire data storage system containing the primary (R1) copies is destroyed during the transfer, then it is still possible to recover in the fashion described immediately above for recovering from the destruction of the data processing

system having the primary (R1) copies. In other words, the secondary copies of the files are inspected, and the file last written is assumed to be corrupted. If the log file were corrupted, then it can be discarded or re-used, because the data file copy is intact. If the log file were not corrupted, then it can be used to recover the data file by applying to the data file the changes recorded in the log file. This recovery technique still works because in the interrupted transfer of the pending secondary write data over the link, the changes to the secondary (R2) copy of the data file are always written to the secondary (R2) copy of the log file before they are written to the secondary (R2) copy of the data file.

If all links are lost between the remotely mirrored data storage systems, as tested in step of FIG. **13**B, then processing with the primary (R1) file copies can continue in step **651**. To avoid the "rolling disaster" scenario, however, the secondary (R2) file copies should not be restored when the link is reestablished in step **652** by transferring secondary write pendings generated since all of the links were lost as in step **654**, unless it can be guaranteed, as tested in step **653**, that the changes to the secondary (R2) copy of the data file are always written to the secondary (R2) copy of the log file before they are written to the secondary (R2) copy of the data file. If processing with the primary (R1) file copies has continued for any substantial length of time, then it cannot be guaranteed that all updates can be transferred to the secondary (R2) log file before the secondary (R2) data file. Therefore, in this case, execution branches to step **655**. In step **655**, the secondary (R2) log and data files **293**, **294** are saved by configuring them as local copies. Next, in step **656** new, initially empty secondary (R2) files are configured corresponding to the primary (R1) files, and remote mirroring is enabled to copy the primary (R1) log and data files **291**, **292** to the new secondary (R2) files. This is an example of a data migration operation upon an active volume, which can be done as described below. Once the new secondary (R2) files have been sufficiently synchronized with the primary files to guarantee that new data is written to the new secondary (R2) log file before the new data is written to the new secondary (R2) data file, recovery has been completed and normal processing may continue. The old, now local secondary file copies can be discarded. However, as tested in step **657**, the data storage system containing the primary files could be destroyed during the migration process before recovery has been completed with the new secondary (R2) files. In this case, in step **658**, the new secondary (R2) files are discarded and the old, saved secondary (R2) log and data files are restored to their secondary status, and used by the application-based recovery program in steps **643** to **645**. This recovery from the old, saved secondary files, however, will recover the state of processing existing just before the all-links failure.

J. Data Migration of Active Volumes

Data migration may be needed when recovering form an all-links failure after continued processing upon a primary (R1) volume, as described above. Data migration may also occur during the initial installation of a remote data storage system for remote mirroring to an active data storage system. Data migration may also occur when a data center or host processor is moved from a local site to a remote site. In all of these cases, it is desirable to minimize the disruption of data processing activities during the migration of data from an active primary (R1) volume to a secondary (R2) volume. The conventional way of performing a data migration to a remotely mirrored volume is to suspend processing on the primary volume, copy its contents to w the remotely mirrored volume, and then resume processing on the primary or secondary volume.

One advantage of performing data processing activities in a remotely mirrored system as shown in FIGS. **1** or **4** is that a host central processing unit can easily be moved from a local site to a remote site. Processing can be quickly switched over from the local site to the remote site so long as the primary and secondary volumes are synchronized at the time of the switch.

A data migration can be performed upon an active volume, with minimal disruption of data processing, by following an iterative technique shown in the flowchart of FIG. **14**. This flowchart represents steps in an active migration task run on the data storage system containing the primary (R1) volume to be migrated. The active migration task, for example, is activated by a system operator using the host remote mirroring software.

In the first step **471** of FIG. **14**, the active volume is configured as a primary (R1) volume, and a new, initially invalid or empty volume is configured as the corresponding secondary (R2) volume to which data from the primary (R1) volume is to be migrated. Next, in step **472**, half of a bitmap array BITMAP(SWITCH) is cleared.

The bitmap array is located in the cache memory of the data storage system containing the primary (R1) volume. The bitmap array has two halves, each of which contains a bit for each track in the volume. Each bit is initially cleared, and each bit is initially set when the corresponding track is updated by new data for the track being written into the cache memory. SWITCH is a flag enabling one or the other of the halves of the bitmap array to receive the changed track identifications. In particular, channel adapter microcode for a host servicing task sets a particular bit in the bitmap by using a base address register that is set with either a first pointer value pointing to the first half of the bitmap array, or a second pointer value that points to the second half of the bitmap array. The logical value of the switch flag determines whether the first pointer value or the second pointer value is used in the base address register for addressing either the first half or the second half of the bitmap array. The migration task can, in a single "atomic" operation, switch the pointer value used by the channel adapter host servicing task. Therefore, the host processing need not be suspended to perform the switching operation.

In step **473**, the migration task enables the changed track identification feature of the host servicing task of the channel adapter microcode so that indications of tracks being changed are written in the half of the bitmap array that was cleared in step **472**. Next, in step **474**, the migration task copies all of the tracks of the primary (R1) volume to the secondary (R2) volume. Once this copying is finished, then in step **475**, the migration task clears the other half of the bitmap array not presently selected by the switch for recording changed track indications. Next, in step **476**, the migration task inverts the switch (i.e., complements its binary state) to begin recording changed track identifications in the portion of the bitmap array that was cleared in step **475**. Then, in step **477**, the migration task copies the changed tracks of the primary (R1) volume, as indicated by the portion of the bitmap array not cleared in step **475**, to the secondary (R2) volume, and the migration task also counts the number of copied tracks. Once all of the indicated changed tracks are copied, execution continues to step **478**.

In step **478**, the migration task displays to the system operator the total number of copied tracks that were counted in step **477**. This number indicates the rate of convergence, so that the operator will have an idea as to when the migration of the active volume will be finished. In step **479** the total number of copied tracks that were counted in step

477 is compared to a threshold. This threshold determines the number of tracks that must be copied while host processing is inhibited. The greater the threshold, however, the more quickly the active volume can be migrated. Therefore, the threshold should be set for about the longest tolerable duration of suspended host access to the data storage system. If step **479** finds that the total number of copied tracks that were counted in step **477** is greater than the threshold, then execution branches back to step **475** to begin another iteration. Otherwise, execution continues to step **480** of FIG. **15**.

In step **480** of FIG. **15**, the migration task suspends host processing with the primary (R1) volume. Then, in step **481**, the migration task copies the changed tracks of the primary (R1) volume, as indicated in the half of the bitmap that was cleared in step **475**, to the secondary (R2) volume. Once this copying is done, the migration task is finished. The primary (R1) and the secondary (R2) volumes are in sync, and they contain the same data. Host processing may then resume by accessing the primary (R1) volume and remotely mirroring data to the secondary volume. Alternatively, before resuming host processing, the linked data storage systems could be reconfigured to reverse the roles of the primary (R1) and the secondary (R2) volumes, so that the host would directly access what was the secondary (R2) volume.

The migration technique of FIGS. **14–15** usually achieves rapid convergence toward synchronization of the primary (R1) and secondary (R2) volumes because during the copying of all of the tracks of the primary (R1) volume in step **474**, a majority of the tracks will not have been changed. Since fewer tracks need to be copied in the next step **477**, the time for a single iteration successively decreases. In any case, convergence can be guaranteed by increasing the priority of the migration task relative to the host servicing task in order to allocate more data storage system processing time to the migration task than to the host servicing task.

The basic migration technique of FIGS. **14–15** can be adapted to use the remote invalid track bits (**124** in FIG. **3**) and remote write pending track bits (**106** in FIG. **3**) in the track directory, instead of the bitmap array described above. In this case, it is desirable to also use similar channel adapter logic for both migration and remote mirroring.

Turning now to FIG. **16**, there is shown control logic for the channel adapter in managing the remote write pending and remote invalid track bits during the processing of a write operation. If the write is not to a primary volume, as tested in step **601**, then execution branches to step **606**, and the states of the remote write pending and remote invalid track bits are unaffected. Otherwise, in step **602** the remote write pending bit is set for the track being written to. Then in step **603**, execution branches to step **606** if the remote invalid bit for the track is already set. Otherwise, in step **604**, the remote invalid bit for the track is set, and in step **605**, the remote invalid track count for the volume is incremented. Then, in step **606**, the data is written to the track in the volume.

Turning now to FIG. **17**, there is shown a flowchart of the migration task that uses the remote invalid track bits, the remote write pending bits, and the remote invalid track count maintained by the channel adapter task of FIG. **16**. In the first step **611** of FIG. **17**, the secondary (R2) volume to receive the migration data from a corresponding primary (R1) volume is invalidated by setting all of the remote invalid track bits for this volume. In step **612**, the remote invalid track count for this secondary (R2) volume is set to the number of tracks in the secondary (R2) volume.

To begin an iteration through the tracks of the remotely mirrored volume pair, in step **613** a track pointer is set to a first track in the remotely mirrored volume pair. Then in step **614** execution branches to step **620** if the remote invalid bit is not set for the track indicated by the track pointer. Otherwise, execution continues to step **615**. In step **615**, the remote write pending bit for the track is cleared. Then in step **616**, the track is copied from the primary (R1) volume to the secondary (R2) volume.

It is possible that during step **616**, the remote write pending bit might be set by a write to the primary (R2) volume, because host processing may continue during the migration process. Therefore, in step **617**, if the remote write pending bit for the track is found to be set, execution continues to step **620**, because the copied track has been invalidated. Otherwise, execution branches to step **618** to clear the remote invalid bit for the track, and in step **619** the remote invalid track count for the secondary (R2) volume is decremented. Execution continues to step **620**.

In step **620**, the track pointer is inspected, and if it does not point to the last track in the remotely mirrored volume pair, then execution continues to step **621** to set the track pointer to the next track in the remotely mirrored volume pair, and execution loops back to step **614**. Otherwise, once an iteration is completed over all tracks in the remotely mirrored volume pair, execution branches from step **620** to step **622**. In step **622**, the remote invalid track count is compared to zero, and if it is zero, the migration is finished because the secondary (R2) volume is synchronized to the primary (R1) volume. Otherwise, execution continues from step **622** to step **623**. In step **623**, the invalid track count is compared to a threshold selected to be about the largest number of tracks that can be copied while host processing is suspended without causing a serious disruption of host processing. If the threshold is exceeded, then execution loops back to step **613** to begin another iteration. Otherwise, execution continues to step **624** to suspend host processing, and then execution loops back to step **613** for one more iteration, which will result in the invalid track count becoming zero and synchronization being achieved between the primary (R1) and secondary (R2) volumes.

K. Servicing of the FIFO Link Transmission Queue

Turning now to FIG. **18**, some components in FIG. **4** are shown in order to depict data structures in the cache **228**. These data structures include the volume and track tables **501**, logical tracks of data **502**, a least-recently used (LRU) queue **503**, the FIFO link transmission queue **504**, and a link buffer **505**.

Elements of the volume and track tables **501** have been shown and described above with reference to FIGS. **3** and **4**. The volume and track tables serve as an index to the logical tracks of data in the cache and stored on disk. The volume and track tables include information identifying the location of each logical track on disk; whether the track image is currently in the cache and if so where; some demographic data such as dates and time stamps about the logical tracks; whether the track image is synchronized with an internal or remote copies; and whether a particular record on the logical track has been modified and is pending a write to disk or to a remote copy.

Blocks of cache memory are dynamically allocated when needed to store the logical tracks of data **502**. The least-recently-used (LRU) queue **503** contains pointers to cache blocks that are available to be allocated. When a cache block is needed, the pointer at the head of the LRU queue **503** identifies the cache block that should be allocated. If the cache block is needed for a read operation, the pointer is placed at the tail of the LRU queue **503**. If the cache block is needed for a write operation, the pointer is taken off the

LRU queue **503**, and is put back on the LRU queue only when a writeback operation to disk has been completed. The pointer is also kept off the LRU queue **503** for remote write pending in the synchronous, semi-synchronous, and adaptive copy—write pending mode in order to retain the remote write pending data in cache.

The FIFO link transmission queue **504** was described above with reference to step **415** of FIG. **8**. In the preferred implementation, this link queue **504** is used in connection with the link buffer **505** in order to prepare information for transmitting commands and data over the link **240** from the link adapter **236** to the remote or secondary data storage system **246** in FIG. **18**. The commands transmitted over the link **240** include a write command for a remote write to a secondary (R2) volume in the secondary data storage system **246**, and a read command for reading data from a secondary volume (R2) in the secondary data storage system. Each command therefore accesses a single volume. The link queue **504** contains a respective entry for each command that is transmitted over the link **240**. Each entry is placed in the link queue **504** by a channel adapter involved in a remote read or write operation, and removed from the link queue by a link adapter that transmits the corresponding command over a remote link to the secondary storage system **246**.

In practice, the host **212** communicates with the channel adapter **226** by sending chains of channel command words (CCW's). Each chain of channel command words define operations to perform with respect to a single logical volume. The chain defines a single input/output operation. The results of all channel command words of this single input/output operation are to be committed before commitment of the results of any following CCW's. Once the host processor sends the entire chain to the channel adapter, it need not poll for a response; instead, the host typically continues with other operations, and is interrupted when the channel adapter responds with a device end (DE) signal indicating that the results of the last CCW in the chain have been committed.

If the CCW chain consisted of a single write command from the host **212** to the channel adapter **226** in FIG. **18**, then the CCW chain would be processed in the following sequence. First, the channel adapter **226** puts the write data in a specified logical track of data **502** in the cache. Then, for an IBM compatible host **212**, the channel adapter "disconnects" from the host. (Disconnect is a term used by IBM to describe the protocol followed by an IBM host writing data in CKD or ECKD format.) The channel adapter **226** also recognizes that the specified logical track is in a remotely mirrored volume pair, and therefore the channel adapter inserts an entry into the link queue, pointing to a location in the link buffer **505**, and puts into the link buffer pointers to the write data in the cache. Then, the link adapter **236** services the link queue **504** by transferring the write data across the link **240**. Finally, when the link adapter **236** receives an acknowledgement of the remote write from the secondary data storage system **246**, the link adapter signals the channel adapter **226**, and the channel adapter "reconnects" with the host **212** and returns a device end (DE) signal to the host.

In the preferred implementation, the entry in the link queue **504** includes a one-byte password for confirming the validity of the entry, a logical volume number specifying the secondary (R2) volume, a number identifying the channel adapter that created the entry, a pointer to a starting location in the link buffer **505** for additional information for the command to be sent to the secondary storage system containing the specified secondary (R2) volume, and lock information by which a particular channel adapter or link adapter can obtain exclusive access to the entry. The lock information ensures that only a single channel adapter loads the entry, and a single link adapter uses the entry to generate a command sent over a link to the secondary data storage system. The link buffer **505** is used in addition to the queue **504** in order to store efficiently a variable amount of information for producing each command sent over a link to the secondary storage system **246**.

In the preferred implementation, each write command sent over a link to the secondary storage system **246** may include write data from multiple channel command words. Moreover, it is very desirable to "bundle" the write data for all write commands in the channel command word chain into a single write command transmitted over a link to the secondary storage system **246**. The channel adapter **226** must therefore decode the channel command words to an extent necessary to determine when it receives the last channel command word in the chain. This decoding process is dependent on the syntax of the channel command words. A conventional fixed-block addressing (FBA) syntax, for example, has a "beginning of chain" channel command with the format START BLOCK, COUNT where COUNT is the number of following command words in the chain. The IBM count-key-data (CKD) syntax has a similar DEFINE EXTENT command, which defines a number of following channel command words included in the chain, although this is not the exclusive method used to indicate the extent of the chain in the IBM CKD syntax. Alternatively, the syntax could use an "end of chain" command. One particular IBM ESCON syntax uses a flag in every channel command word to indicate whether or not the word is the last word in its chain.

IBM CKD channel command words have a syntax described, for example, in N. S. Prasad, "IBM Mainframes: Architecture and Design," McGraw-Hill Book Company, New York, N.Y., 1989, Section 3.4, Input/Output Architecture, pp. 58–73, incorporated herein by reference, and "The IBM 3990 Storage Control Reference," No. GA32-0099-04, International Business Machines Corporation, Tucson, Ariz., 1991, pp. 1–304, incorporated herein by reference. In general, the IBM CKD channel commands are in effect program instructions, and IBM Corp. refers to a string of channel command words as a "channel program." On pages 61 to 63, for example, N. S. Prasad, "IBM Mainframes: Architecture and Design," says: "A channel program consists of one or more Channel Command Words (CCWs). Each CCW occupies a double-word location in storage. The CCWs have consecutive addresses. The channel fetches a CCW, decodes it, and executes it. Execution consists of passing the CCW to the control unit and device for performing the required operation. After the required operation is performed, the channel executes the CCW in the next contiguous location, if the last CCW contains a chaining flag. It is possible to branch to a noncontiguous CCW by using a transfer-in-channel command. By using command chaining and the TRANSFER in CHANNEL command it is possible to perform branching and looping within a channel program."

For processing IBM CKD channel command words, the channel adapter decodes and executes the channel command words, and applies the rules set out in the above IBM references to determine when the end of the chain is reached. The channel interface in the IBM host processor also decodes channel command words to find the end of the chain, in order to interrupt the host processor when the channel adapter sends back the device end (DE) for the last

CCW in the chain. (See page 60 of N. S. Prasad, "IBM Mainframes: Architecture and Design.")

The preferred format for the information in the link buffer **505** is a string of track and record identifications and indications of where the records are found in the cache **228**. The track and record identifications, for example, are in the form of: "track no. p, starting at record q, n records, starting at cache address r; track no. s, starting at record t, m records, starting at cache address u; . . . . " In this example, not every record need be specified, because ranges or extents of contiguous records can be specified. Also, with this format, the track and record identifications can be built up and appended into the link buffer **505** as write channel command words are decoded by the channel adapter, and the data for each write channel command word is loaded into cache at the indicated starting addresses.

Each link adapter scans the link queue **504** in an iterative loop, looking for unlocked entries to service, beginning at the head of the queue. The link adapter locks the next entry to service, checks the password to determine if the entry is valid, and if so, gets the buffer pointer from the entry, reads the buffer, and builds a job to be executed for transferring data from cache across the link in a direct memory access (DMA) operation. In particular, the link adapter builds a header, and transmits over the link the header, followed by the data, followed by a cyclic redundancy check (CRC). The header, for example, contains a command code such as a code for read or write access, link and command status flags, the logical volume number of the secondary (R2) volume to access, and the invalid track count for the secondary (R2) volume.

Turning now to FIGS. **19** and **20**, there is shown a flowchart of the control logic in the channel adapter for bundling the remote write commands included in a channel command word chain. In a first step **521** of FIG. **19**, the channel adapter receives a channel command word from the host. Then in step **522**, execution branches to step **523** if the channel command word is a write to a secondary (R2) volume in the remote data storage system. In step **533**, the channel adapter performs the action specified by the channel command word. Then, in step **524**, execution loops back to step **521** if the end of the CCW chain has not been reached. If step **524** finds that the end of the CCW chain is reached, then execution continues to step **525** to send a device end (DE) signal to the host, and execution loops back to step **521**.

If step **522** finds the channel command word specifies a remote write, then execution continues to step **526**. In step **526**, the channel adapter gets an entry for the link queue. This entry is a free block of cache memory. Then in step **527**, execution branches to step **528** if the remote write operation must be suspended for a synchronization mode. In the synchronous and semi-synchronous modes, the remote write must be suspended if there is already a pending write to the secondary (R2) volume. In the adaptive copy—pending write or adaptive copy—disk modes, the remote write must be suspended if the "invalid tracks" count for the secondary (R2) volume has reached the skew value. After the channel adapter task has been suspended and resumed to maintain synchronization in step **528**, or if step **527** finds that there is no need to suspend the channel adapter task for synchronization, execution continues to step **529**.

In step **529**, the channel adapter puts the queue entry on the tail of the link queue. Then in step **530**, the channel adapter writes one or more records into cache, setting the local and remote write pending flags, as will be further described below with reference to FIG. **22**, and accumulates in the link buffer identification and record pointer information for the remote write operation. Next, in step **531**, execution continues to step **532** if the end of the CCW chain has not been reached. In step **532**, the channel adapter receives the next channel command word. Then, in step **533**, execution loops back to step **530** if this next channel command word requires a remote write operation to a remote secondary (R2) volume. If not, execution continues to step **534**. In step **534**, the channel adapter performs the operation specified by the channel command word, and execution loops back to step **531**. Once the end of the chain is found in step **531**, execution branches to step **535** of FIG. **20**.

In step **535** of FIG. **20**, the channel adapter marks the link queue entry valid for processing by a link adapter, and releases its lock on the link queue entry. Execution then continues to step **536**. In step **536**, steps **416** to **422** of FIG. **8** are performed as described above, to send a device end (DE) signal to the host. For all but the synchronous mode, the device end (DE) signal is sent immediately. For the synchronous mode, the device end (DE) signal is not sent until the remote write has been acknowledged.

Turning now to FIG. **21**, there is shown a flowchart of the control logic for the link adapter, corresponding to the flowchart of the channel adapter in FIGS. **19** and **20**. In a first step **541**, the link adapter starts at the head of the link queue, and scans the entries in the queue in sequence until it finds a valid, unlocked entry to process, and then the link adapter locks the queue entry so that no other link adapter will attempt to process it. In step **542**, the link adapter assembles information for the header of a command to transmit over a link of the link adapter. In step **543**, the link adapter builds a transmission job from the information in the link buffer.

In step **544**, the link adapter checks whether the entry it is processing is at the head of the link queue, and if not, the link adapter waits until the entry reaches the head of the queue. Then in step **545**, the link adapter removes the entry from the head of the link queue, marks the status information of the header with a time stamp or sequence number, and executes the job to send the command over the link, including the header followed by data read from the cache in a direct memory access (DMA) operation, and a cyclic redundancy check. The time stamp or sequence number can be used by the remote data storage system to detect link transmission problems and to write to its cache in proper sequence data from commands received from various links and link adapters despite possible delay of some commands due to link failure. In an alternative arrangement, each link queue entry or corresponding link buffer entry could be marked with a time stamp or sequence number at the time the link queue entry is inserted at the tail of the link queue, so that step **544** could be eliminated. Moreover, in the short distance option configuration having a single link, time stamps or sequence numbers would not be needed, because each command could be transmitted over the link, received, and acknowledged before the next command in the link queue would be transmitted.

Next, in step **546**, for the long-distance option, the link adapter task for the queue entry is suspended for a time until resumed upon receipt of a corresponding acknowledgement from the remote data storage system. When the link queue entry is suspended, a new task is begun in step **541**. In the short distance option, however, it may be preferable for the task to poll for an acknowledgement of receipt, instead of suspending the task. In any case, if a receipt is not acknowledged within a timeout period, as tested in steps **547** and **548**, then in step **549** an error is logged or reported to the

system operator, and in step **550** the job is re-executed to retransmit the command over the link, or if retransmission is unsuccessful, the job is redirected to an alternative link or alternative link adapter.

Once the link adapter receives an acknowledgement of receipt of the write command from the remote data storage system, execution continues from step **547** to step **551**. In step **551**, the link adapter reports the receipt of the acknowledgement to the channel adapter which originated the write command. This reporting, for example, is done by the link adapter writing a message in a mailbox region of cache memory preassigned to the channel adapter which originated the command. Alternatively, circuitry could be provided so that the link adapter could directly interrupt the channel adapter.

In step **552**, the link adapter de-allocates the cache memory of the link queue and the corresponding memory in the link buffer. The task is then done. In the short distance option, the link adapter could continuously run a single task, in which case execution would loop back from step **552** to step **541**.

Turning now to FIG. **22**, there is shown a flowchart of a procedure that could be used in step **530** of FIG. **19** for writing a record to a primary (R1) volume. In the first step **561** of FIG. **22**, the channel adapter checks whether the track of the record is in cache. If not, then execution branches to step **562** to fetch a next cache track slot from the LRU queue (**503** of FIG. **18**). Then in step **563**, the channel adapter checks whether the track is on disk. If so, then execution branches to step **564**, and the track is copied from disk to the cache slot in cache. If not, execution loops around step **564**. Then in step **565**, the track tables are updated to indicate that the track now resides in the new cache track slot. Then in step **566**, the record is written to the cache track slot. In step **567**, the local and remote write pending flags are written in the track tables. For example, each track has such local and remote write pending flags, and also each record has such local and remote write pending flags. Finally, in step **568**, a pointer to the record in cache is accumulated in the link buffer.

If the track does reside in cache, then in step **569**, execution branches to step **570** if the channel adapter is working in an "overwrite cache option" for the volume. This is the fastest option for remote mirroring of data, but it contributes to the "rolling disaster" problem. In the overwrite cache option, every single update to a record of a primary volume is not necessarily transmitted to the secondary volume. Instead, if the cache contains a remote write pending record that has not yet been transmitted by a link adapter to the data storage system having the secondary volume, then a new version will overwrite this write pending record in cache (in step **566**). In the adaptive copy modes, however, the overwrite cache option substantially increases the performance of remote mirroring of data, by reducing the number of remote pending records that are maintained in cache or on disk.

In step **570**, execution continues to step **566** if a "compress" option is not enabled for the volume. The compress option is described below with reference to FIG. **23**.

If overwrite cache option is not enabled, then execution continues from step **569** to step **569** to check whether there is a remote write pending to the record in cache. If not, execution branches to step **566**, since in this case there is no possibility of an overwrite of a remote write pending record not yet transmitted over the link. If there is a remote write pending record, then execution branches to step **572**. To avoid writing over the remote write pending record, when step **572** finds that a "log in cache" option is not selected for the volume, then execution branches back to step **561** to stall or suspend the writing of the new record until the cache slot no longer contains the remote write pending record; step **561** will check that the track has not been removed from cache during suspension of the current channel adapter task.

If the "log in cache" option is selected, then execution continues from step **572** to step **573**. In step **573**, a new cache track slot is obtained from the head of the LRU queue, and in step **574** the existing remote write pending track is copied to the new cache track slot. Therefore, the original track in cache is still available for transmission of the original remote write pending record over the link by a link adapter, and a new cache track slot for the same track is available to receive the new version of the write pending record. Execution continues from step **574** to step **565**, so that the track tables are updated to point to the new cache track slot.

The "log in cache" option should be used only if the current loading on the data storage system is very light, because the copying of data from one cache track slot to another will tie up access to the cache. Also, keeping multiple versions of tracks in cache will tie up cache resources, so a count of such old versions of tracks should be kept (incremented when a copy is made, and decremented when the track cache slot is deallocated upon receipt of acknowledgement of a remote write operation), and no more than a certain number of such old versions should be permitted in cache at any given time. The "log in cache" option, however, would permit uninterrupted host access to a primary (R1) volume in the event of an all-links failure for a short period of time. The short period of time could be used to detect the "all links" failure, and to switch the remote links over to some spare disk drives to create a non-volatile log of all remote writes. If a link could be restored before the spare disk drives are overloaded, then the spare disk drives could be used to restore the secondary (R2) volumes without the possibility of corruption due to the "rolling disaster" scenario.

If step **570** finds that the compress option is enabled, then execution branches to step **575** of FIG. **23**. In step **575** of FIG. **23**, execution branches back to step **566** of FIG. **22** if a remote write is not pending. Otherwise, execution continues to step **576** of FIG. **23**. In step **576**, the new record is written to the track cache slot. In step **577**, the local write pending flag is set in the track tables. Then in step **578**, the track tables are accessed to determine whether the prior write pending operation is still on the link queue. For the compress option, for example, the track table contains "on-queue" bits in addition to the "write pending" bits; the on-queue bits would be set in step **530** of FIG. **19** (and in step **568** of FIG. **22** and step **579** of FIG. **23** for particular records) and cleared in step **545** of FIG. **21**. If the prior write pending operation is still on-queue for the new write data, it is not necessary to accumulate in the link buffer the pointers to the new write data since the prior write pending pointers, still on queue, will cause the new write data to be sent. Therefore, in this case, execution returns from step **578**. Otherwise, execution continues from step **578** to step **579**. In step **579**, the pointers to the new write data are accumulated in the link buffer.

L. Remote Mirroring Error Messages

In a preferred implementation of the remote mirroring facility, the data storage system reports the following environmental error messages at the service processor user interface, and to the host and the customer service center:

Dynamic sparing invoked.

Dual-initiator adapter failed to reset.

Over temperature condition.

Data storage system power system alarm.

Locally mirrored drive (primary (R1) volume) is in a "not ready" state.

Locally mirrored drive (primary (R1) volume) is write disabled.

Remotely mirrored drive (secondary (R2) volume) is in a "not ready" state.

Service processor not responding.

Failed to complete an automatic call to the customer support center.

Power supply failure.

Environment cable missing.

AC line failure or interruption.

High charge state not detected within 2 minutes of power up; or, clock inconsistency found between data storage system and service processor; or, adapter inserted without power-up.

Latched alarms.

Link adapter problem/failure.

Link adapter problem/failure corrected; all links operational

M. Remote Mirroring Event Messages

In a preferred implementation of the remote mirroring facility, the data storage system reports the following device-level events at the service processor user interface and to the host and to the customer service center:

Secondary (R2) volume resynchronized with primary (R1) volume.

Primary (R1) volume resynchronized with secondary (R2) volume.

Resynchronization process has begun.

N. Remote Mirroring Status Commands

In a preferred implementation of the remote mirroring facility, the service processor and the host remote mirroring software responds to the following commands for requesting remote mirroring status:

(1) Display Configuration Status

This command displays the following status information regarding logical volumes configured for remote mirroring:

Volume number.

Channel number.

Number of cylinders on volume.

Mirrored volume status.

Flags enabled for the volume:

80—primary (R1) volume

40—secondary (R2) volume

20—WR Enable (secondary (R2) volume read/write enabled)

10—Not Ready (volume "not ready" to host)

08—semi-synchronous mode of operation

04—data migration

02—Sync required

01—Domino effect

(2) Display Write Pending Tracks

This command displays the number of write pending tracks between remotely mirrored volume pairs. An invalid track count is displayed for each of the primary (R1) and secondary (R2) volumes. Synchronized pairs display "0" for the invalid track counts for each of the primary (R1) and secondary (R2) volumes.

(3) Display Adaptive Copy Volumes

This command displays the primary (R1) volume, the secondary (R2) volume, the adaptive copy mode (write pending or disk), and the skew value set for each remotely mirrored pair having adaptive copy enabled.

O. Remote Mirroring Configuration Commands

In a preferred implementation of the remote mirroring facility, the service processor and the host remote mirroring software respond to the following commands for requesting remote mirroring status:

Set the configuration of primary (R1) volumes and their corresponding secondary (R2) volumes.

Make a specified primary (R1) volume or range of primary volumes or all primary volumes "ready" to the remote host.

Make a specified primary (R1) volume or range of primary volumes or all primary volumes "not ready" to the remote host.

Enable a specified secondary (R2) volume or range of secondary volumes or all secondary volumes for remote host writes.

Enable a specified secondary (R2) volume or range of secondary volumes or all secondary volumes for remote host "read only".

Make a specified secondary (R2) volume or range of secondary volumes or all secondary volumes "not ready" to the remote host.

Enable volume domino mode for a specified primary (R1) volume or range of primary volumes or all primary volumes.

Disable volume domino mode for a specified primary (R1) volume or range of primary volumes or all primary volumes.

Enable link domino mode.

Disable link domino mode.

Set the synchronous mode for a specified primary (R1) volume or range of primary volumes or all primary volumes.

Set the semi-synchronous mode for a specified primary (R1) volume or range of primary volumes or all primary volumes.

Enable adaptive copy—write pending mode and set the skew rate for a specified primary (R1) volume or range of volumes.

Enable adaptive copy—disk mode and set the skew rate for a specified primary (R1) volume or range of volumes.

Disable adaptive copy for a specified primary (R1) volume or range of volumes.

Enable the "sync required" attribute for a specified primary (R1) volume or range of primary volumes or all primary volumes.

Disable the "sync required" attribute for a specified primary (R1) volume or range of primary volumes or all primary volumes.

P. Host Remote Mirroring Software Features

The optional host remote mirroring (RM) software (**213** in FIG. **4**) enables an operator to monitor and control remote mirroring and data migration of the data storage system by entering commands at a host system console. In particular, the operator can query the status of the drive and link relationships between remotely mirrored data storage systems, query the synchronization status of each mirrored volume pair, modify the synchronization modes for each mirrored volume pair, and issue commands to suspend or resume the mirroring activity for each mirrored volume pair or an entire data storage system. The host remote mirroring

software commands may be integrated into automated operations or host applications, giving the user a robust and elegant implementation of remote mirroring with a great deal of flexibility and control.

For all command examples below, the "#" character is used for a "command prefix" parameter. When executing the command examples, substitute the particular command prefix recognized by the host operating system.

(1) Sync Direction

The host remote mirroring software permits an operator or host application program to initiate, inhibit, suspend, or resume remote mirroring in any specified direction between two data storage systems configured for remote mirroring. (See, for example, the actions that can be performed by the #SC VOL command described below.) When the host remote mirroring software is loaded and initialized, parameter statements may be included to restrict this "sync" direction that is allowed for the remote mirroring configuration, and to initialize the sync direction.

(a) Synch Direction Allowed

The parameter statement SYNCH_DIRECTION_ALLOWED, is optional and sets valid values for current synch direction that can be specified in the SYNCH_DIRECTION_INIT initialization parameter and in the #SC GLOBAL,SYNCH_DIRECTION command. The parameter values for this statement may be one of the following:

R1>R2 which will only allow the synch direction to be set to primary (R1) to secondary (R2) or NONE;

R1<R2 which will only allow the synch direction to be set to secondary (R2) to primary (R1) or NONE;

R1<>R2 which will allow the synch direction to be set to any valid setting; or

NONE which will only allow the synch direction to be set to NONE.

If this parameter is not specified, SYNCH_DIRECTION_ALLOWED defaults to R1>R2. When NONE is specified for SYNCH_DIRECTION_ALLOWED, the #SC VOL command parameters VALIDATE and INVALIDATE will not function. The format of this parameter statement is as follows:

SYNCH_DIRECTION_ALLOWED=R1>R2 ¦ R1<R2 ¦ R1<>R2 ¦ NONE

For example: SYNCH_DIRECTION_ALLOWED=R1>R2

(b) Synch Direction Init

The parameter statement SYNCH_DIRECTION_INIT, is optional and sets the synchronization direction at the time the host remote mirroring software is started. The current SYNCH_DIRECTION may be changed using the #SC GLOBAL,SYNCH_DIRECTION command. The parameter values for this statement may be R1>R2 which specifies that VALIDATE is allowed only on secondary (R2) volumes and INVALIDATE is allowed only on primary (R1) volumes, or R1<R2 which specifies that VALIDATE is allowed only on primary (R1) volumes and INVALIDATE is allowed only on secondary (R2) volumes, or NONE. If this parameter is not specified, SYNCH_DIRECTION_INIT defaults to NONE. The format of this parameter statement is as follows:

SYNCH_DIRECTION_INIT=R1>R2 ¦ R1<R2 ¦ NONE

For example: SYNCH_DIRECTION_INIT=R1<R2

This parameter must not conflict with SYNCH_DIRECTION_ALLOWED and is therefore subject to all constraints set by SYNCH_DIRECTION_ALLOWED. This parameter may be changed with the #SC GLOBAL, SYNCH_DIRECTION command.

(2) Host Remote Mirroring Software Status Commands

These commands allow an operator to view various aspects of remote mirroring status.

#HELP

The HELP command displays all available host remote mirroring software commands.

#SQ ADC

The SQ ADC command displays the adaptive copy skew values for the specified volumes(s).

Format: #SQ ADC, cuu, count ¦ ALL

Parameters: cuu Specifies the host device number for the volume

count Specifies the number of devices for which to display adaptive copy information. This value can be set from 1 to 256 (decimal) or ALL. If this parameter is not specified, count defaults to 1.

Comments: Only the source (R1) volumes in adaptive copy mode (disk or write pending) are displayed.

Example: #SQ ADC,F00,5

This example displays the following fields:

1. host device number.
2. First device address (hex) on the host channel.
3. Control unit device number in hex.
4. Remotely mirrored device number in hex.
5. Adaptive Copy mode in effect. Valid values are Adaptive Copy—Write Pending mode (AW), or Adaptive Copy—Disk mode (AD).
6. Current skew value—for Adaptive Copy—Write Pending mode, it is the number of writes pending for the target (R2) volume. For the Adaptive Copy—Disk mode, it is the number of tracks marked as out-of-sync between the source (R1) and the target (R2) volume.
7. Adaptive copy maximum skew value for device(s). Range=1 to 999,999 (decimal).

#SQ CNFG

The SQ CNFG command displays the status of the data storage system. It lists the serial number of the data storage system, the amount of cache memory installed, the controller emulation type, the microcode level, the data storage system IDs and their associated number of devices, and the adapter type and layout.

Format: #SQ CNFG, cuu

Parameters: cuu specifies the host device number.

Comments: Issue this command to determine the location of the link adapters in the data storage system for the remote mirroring operations.

Example: #SQ CNFG,**500**

This example causes the following fields to be displayed:

1. data storage system serial number.
2. Cache size in megabytes.
3. Controller emulation type.
4. Microcode level.
5. Data storage system ID(s) with associated number of devices.
6. Microcode patch level and date.
7. Maximum number of tracks to allow to be out of synchronization.
8. (through 23) Data storage system adapter types. Valid values are: DA=Disk Adapter, CA=Parallel Channel Adapter, EA=Serial Channel Adapter, SA=Fast-Wide SCSI Channel Adapter, LA=link adapter.

#SQ GLOBAL

The SQ GLOBAL command displays the settings for the various global parameters including the current host remote

mirroring software version, the current and allowed synch directions, the status of message processing and the size of a message table, and setting for an OPERATOR_VERIFY initialization parameter.

Format: #SQ GLOBAL

Example: #SQ GLOBAL

The example displays the following fields:

1. The host remote mirroring software version.
2. The current synchronization direction. Valid values are NONE, R1>R2, and R1<R2.
3. The status of message processing. Valid values are Yes, "nnn" or No. The value "nnn" is the number of messages that can be held in the message table.
4. The setting for operator verification. Valid values are ALL, NONE, or CRITICAL.
5. The allowable synchronization directions as specified in the initialization parameters. Valid values are NONE, R1>R2, R1<R2, or R1<>R2.

#SQ LINK

The SQ LINK command displays the port connection and online/offline status of individual link adapters. It also displays the average input/output's per second during a short interval, and the total input/output's since the last data storage system initial microcode load.

Format: #SQ LINK, cuu

Parameters: cuu Specifies the host device number.

Example: #SQ LINK,**600**

This example displays the following fields:

1. host device number.
2. Adapter number of the link adapter in hex.
3. Link adapter type.
4. Number of ports.
5. Port connection status (Y=link path established; N=no link path established). This field corresponds left to right as to the ports on the board. The ports on the board are top to bottom.
6. Link status. Valid values are ONLINE or OFFLINE.
7. Short interval duration during which the average number of start input/output commands are calculated. This timer resets approximately every 10 minutes or when a data storage system initial microcode load occurs or utility reset command is issued.
8. Average input/output's per second over the short time interval.
9. Time since last data storage system initial microcode load or last utility reset command issued from the service processor.
10. Total start input/output commands since last data storage system initial microcode load or last utility reset command.

#SQ MSG

The SQ MSG command displays any remote mirroring error or informational messages presented to the host console if the message processing startup option was selected. These messages can be generated by any data storage system in the remote mirroring configuration.

Format: #SQ MSG, count ¦ ALL

Parameters: count Specifies the number of messages to display.

This value can be set from 1 to the size of the message log (as specified in a MESSAGE_PROCESSING initialization parameter) or ALL. If this parameter is not specified, count defaults to 1.

Comments: This command, when issued with the ALL parameter, displays all messages currently held in the message log. The newest messages will appear at the top of the display and the oldest messages at the bottom of the display.

Example: #SQ MSG,ALL

This example displays the following fields:

1. Date of error condition.
2. Time of error condition.
3. Reporting device address.
4. Device experiencing error (data storage system device number).
5. Device volser of device reporting the error.
6. Control unit system ID.
7. Data storage system message. Valid remote mirroring messages include: DYNAMIC SPARING INVOKED, TARG VOLUME RESYNC W/PRIMARY, PRIMARY VOLUME RESYNC W/SECONDARY, R1 VOL NOT READY STATE, R1 VOL WRITE DISABLED, R2 VOLUME IN NOT RDY STATE, ADAPTER LINK PROBLEM, RESYNC PROCESS HAS BEGUN, ADAPTER LINK OPERATIONAL. Valid migration messages are similar except substitute "DATA MIGRATION COMP ON VOL" for "PRIMARY VOLUME RESYNC W/SECONDARY".

#SQ SSID

The SQ SSID command displays the data storage system IDs known to the host operating system and the number of devices associated with them during the remote mirroring initialization.

Format: #SQ SSID, count ¦ ALL

Parameters: count Specifies the number of data storage system IDs to display. This value can be set from 1 to 64 (decimal) or ALL. If this parameter is not specified, count defaults to 1.

Comments: Setting the parameter value to ALL displays all data storage system IDs found with devices online to the host.

Example: #SQ SSID,ALL

This example displays the following fields:

1. System ID.
2. Number of devices (in hex) that have been known to be online for this storage system ID.
3. Flags.
   x'80' 1... .... EMC Corp. SYMMETRIX data storage system
   x'40' .1.. .... EMC Corp. data storage system 5xxx Series
   x'20' ..1. .... 3990 controller emulation
   x'10' ...1.... DEV number is valid. Treat this field as a bit mask. More than one of these bits may be on at a given time. For example, a value of "F0" indicates that the controller is a EMC SYMMETRIX data storage system, 5xxx Series, in 3990 mode, and that the device numbers are valid. An IBM Corp. model 3990 data storage system would have a x'20' flag.
4. First cuu found for this data storage system ID.
5. First device address (hex) on the host channel.
6. First data storage system device number.
7. Last cuu found for this data storage system ID.
8. Last device address (hex) on the host channel.
9. Last data storage system device number.

#SQ VOL

The SQ VOL command displays the status of individual remote mirroring volumes including online, offline, synchronization state, write protection state, remote mirroring mode of operation, etc. Format: #SQ VOL, cuu, count ¦ ALL ¦ INV_TRKS

Parameters: cuu Specifies the host device number

count Specifies the number of devices to display. This value can be set from 1 to 256 (decimal), or ALL, or INV_TRKS. If this parameter is not specified, count defaults to 1.

Comments: Only remote mirroring volumes display INV_TRK values.

The count parameter can display either a range of remote mirroring devices, or the status of ALL remote mirroring devices on a specified control unit, or only those remote mirroring devices with an invalid tracks count.

Example: #SQ VOL,600,8

This example displays the following fields:

1. Host device number. Field 1 displays "????" for devices not online during startup or put online after the last SC GLOBAL,SSID_REFRESH command.
2. First device address (hex) on the host channel. Field 2 displays "??" for devices not online during startup or put online after the last SC GLOBAL,SSID_REFRESH command.
3. Data storage system device number in hex.
4. Remotely mirrored logical volume number in hex.
5. Device volser. If the device was online at system initialization or during a SC GLOBAL,SSID_REFRESH, the volser is from a system configuration control block (UCB); otherwise, it is the volser assigned to the device when the data storage system was installed.
6. Total number of cylinders on volume.
7. Host device status. Valid values are:
   NOSCHIB=no sub-channel for device,
   HOT-IO=device is in hot input/output status,
   PDA-PRV=pending offline, allocated, mounted private,
   PDA-PUB,=pending offline, allocated, mounted public,
   PDA-STG=pending offline, allocated, mounted storage,
   OFFLINE=device offline to the host,
   ON-PRV=online, mounted private,
   ON-PUB=online, mounted public,
   ON-STG=online, mounted storage,
   ONA-PRV=online allocated, mounted private,
   ONA-PUB=online allocated, mounted public,
   ONA-STG=online allocated, mounted storage,
   N/A=the system configuration control block (UCB) was not available.
8. Number of open DCBs.
9. Control Unit status. Format is xxx-yy-z. Valid values are: xxx=R/W (read/write mode), xxx=R/O (read only mode), xxx=N/R (not ready mode), xxx=RNR (RDF devices globally not ready), xxx=TNR (secondary (R2) not ready; this status indicates that communication between the remote mirroring pair is currently inactive due to either the link is offline, the link path is physically unavailable or the remote mirroring pair is RDF-Suspended. Use the #SQ LINK command to determine whether the links are online or offline, and the physical connection status of the links), yy=SY (Synchronous mode), yy=SS (Semi-Synchronous mode), yy=AW (Adaptive Copy—Write Pending mode), yy=AD (device is configured for Adaptive Copy—Disk mode), z=I (a secondary (R2) volume to go not ready if the primary (R1) volume (its mirrored device) has invalid tracks on secondary (R2) volume and a state of change has been requested on the secondary (R2) volume), z=D (primary (R1) volume to go not ready if secondary (R2) volume is not ready—Domino mode).
10. Mirroring status. Valid values are:
    R1=Remote mirror primary (R1) volume,
    R2=Remote mirror secondary (R2) volume,
    ML=Local mirror volume,
    RS=Raid-S volume,
    (blank)=unprotected device.
11. Primary (R1) volume invalid track count.
12. Secondary (R2) volume invalid track count.
13. Primary (R1)/secondary (R2) volume synchronization percentage.

(3) Host Remote Mirroring Software Configuration Commands

#STOP

The STOP command terminates the host remote mirroring software.

#SC CNFG

The SC CNFG command sets the number of invalid tracks allowed for the Adaptive Copy—Disk mode function.

Format: #SC CNFG, cuu, value

Parameters: cuu Specifies the host device number.

value Specifies the maximum allowable tracks (1 to 999,999 decimal) out of synchronization for a specified volume.

Example: #SC CNFG,E00,250

This example sets the maximum allowable invalid tracks for the volume having device number E00 to 250.

#SC GLOBAL

The SC GLOBAL command, when used with the SSID_REFRESH parameter, causes the host remote mirroring software to "refresh" its internal control blocks with information regarding any data storage systems, volumes, and volsers that have been brought online since the host remote mirroring software was started or the last refresh command was issued.

Format: #SC GLOBAL, SSID_REFRESH or
#SC GLOBAL, SYNCH_DIRECTION,R1>R2 ¦ R1<R2 ¦ NONE

Parameters: SSID_REFRESH Refreshes host remote mirroring software internal control blocks with the latest information on data storage system IDs, devices, and volsers.

SYNCH_DIRECTION Sets current synchronization direction. Valid values are subject to restrictions set by the SYNCH_DIRECTION_ALLOWED initialization parameter.

Comments: Devices that have been taken offline are not deleted from host remote mirroring software internal control blocks during the refresh processing. This allows the host remote mirroring software to maintain the host device number to data storage system device number mapping to simplify the entry of #SC VOL commands.

#SC LINK

The SC LINK command modifies the status of a link adapter.

Format: #SC LINK, cuu, dir#, state

Parameters: cuu Specifies the host device number

dir# Specifies the link adapter number. Valid values are 01–10 (hex) or ALL.

state Specifies the states of the specified link adapter(s). Valid values are OFFLINE and ONLINE. Comments: The adapter number specified must be a link adapter. If necessary, issue the #SQ CNFG command to determine the link adapter numbers. When ALL is specified as the dir# parameter value, the requested state of change will be applied to all link adapters.

#SC MSG

The SC MSG command, when used with the RESET parameter, clears the message log.

Format: #SC MSG,RESET

Parameters: RESET Clears the message log of all entries.

#SC VOL

The SC VOL command modifies the status of remote mirroring volumes. This configuration command provides the ability to set the remote mirroring operational mode. All #SC VOL commands require the operator to confirm the action specified, unless this has been disabled by the OPERATOR_VERIFY sysparm. This confirmation is necessary as some actions may result in loss of data if performed incorrectly. For example, only one volume in a remotely mirrored pair may be read/write-enabled when the devices are remote mirror suspended. The requirement for confirmation may be bypassed based on the value specified for the OPERATOR_VERIFY initialization parameter.

Format: #SC VOL, cuu, action, dev#, value

Parameters: cuu Specifies the host device number.

action See the table of possible actions below.

dev# Specifies the data storage system device number. Valid values are 00 to FF (hex) and ALL. Used with the ADCOPY_DISK option.

value This value represents the maximum skew value for the device(s) in adaptive copy mode.

Comments: If a data storage system device number is specified, it must be a valid device type (R1 or R2) for that action. If ALL is specified for the dev# parameter, the host device number may be any device type, but the action will be performed only on the valid device types. If no dev# parameter is specified, then the host remote mirroring software will attempt to use the cuu to determine the data storage system device number on which to perform the action.

Table of Possibie Actions:
(R1 = primary volume, R2 = secondary volume)

Action Valid	Volume Type	Description
R/W	R2	Make secondary (R2) device(s) read and write enabled. This allows a secondary (R2) to be written to from the channel. Please note that if you write to the secondary (R2) device, you should perform testing and recovery procedures.
R/O	R2	Make secondary (R2) device(s) read-only. When a secondary (R2) volume is in this status, any attempt to issue a write from the channel produces an input/output error
RDY	R2	Make secondary (R2) device(s) ready to the host.
NRDY	R2	Make secondary device(s) not ready. In this state, the secondary (R2) volume responds "intervention required" to the host for all read and write operations to that volume. This is the default state for a secondary (R2) volume.
SYNC	R1	Set primary (R1) device to the synchronous mode. This is a remote mirroring mode of operation that ensures 100% synchronized mirroring between the two data storage systems.
SEMI-SYNC	R1	Set primary (R1) device to the semi-synchronous mode. This is an remote mirroring mode of operation that provides an asynchronous mode of operation.
DOMINO	R1	Enable volume domino mode for primary (R1) device. This ensures that the data on the primary (R1) and secondary (R2) volumes are fully synchronized at all times in the event of a failure.
NDOMINO	R1	Disable volume domino mode for primary (R1) device. During this default operating condition, a primary (R1) volume continues processing input/outputs with its host even when an remote mirroring volume or link failure occurs. These failures cause loss of primary (R1) and secondary (R2) synchronization. When the failure is corrected, the devices begin synchronizing.
RDF-RDY	R2/R1	Set volume ready to the host for remote mirroring operation. This action is valid for both primary (R1) and secondary (R2) volumes.
RDF-NRDY	R2/R1	Set volume not ready to the host for remote mirroring operation. This action is valid for both primary (R1) and secondary (R2) volumes.
ADCOPY-WP	R1	Enable adaptive copy - write pending function for primary (R1) device. When this attribute is enabled, data storage system acknowledges all writes to primary (R1) volumes as if they were local volumes.
NADCOPY	R1	Disable Adaptive Copy Function for primary (R1) device. Please note that when switching from adaptive copy - disk mode to adaptive copy - write mode or from adaptive copy - write mode to adaptive copy - disk mode, this command must first be used before setting the new adaptive copy mode. Please note that when this command is issued to remove a device from adaptive copy mode, the state change will not take place until the volumes are synchronized.
ADCOPY-DISK	R1	Place the specified device(s) in adaptive copy disk mode.
ADC-MAX	R1	Set the adaptive copy maximum skew value for the device(s). Example: #SC VOL,F00,ADC-MAX,,80. The maximum skew value may be specified in the range of 1–999999. This command may only be entered when the device is in one of the supported adaptive copy modes. Setting the skew value too high in Adaptive Copy - Write Pending mode could result in excessive cache use adversely affecting data storage system performance.
RDF-SUSP	R1	Suspend remote mirroring operation on specified device. If the device is already suspended, this action is ignored.
RDF-RSUM	R1	Resume remote mirroring operation on specified device. This action is only valid if the device was previously suspended via a successful RDF-SUSP action or

-continued

Table of Possibie Actions:
(R1 = primary volume, R2 = secondary volume)

Action Valid	Volume Type	Description
		INVALIDATE action.
VALIDATE	R1/R2	Make all tracks for a primary (R1) volume valid on a secondary (R2) volume. When SYNCH_DIRECTION=R1>R2 this action code makes all tracks from a primary (R1) volume valid on secondary (R2) volumes. When SYNCH_DIRECTION=R1<R2 this action code makes a primary (R1) volume not ready and prepares it to be re-synched from the secondary (R2) volume using RDF-RSUM. It makes all tracks for a secondary (R2) volume valid on the primary (R1) volume.
INVALIDATE	R1	Make all tracks invalid for a secondary (R2) volume on a primary (R1) volume. When resynchronization begins, all primary (R1) volume tracks are copied to the secondary (R2) volume.

(4) Data Migration Query Commands

#SQ VOL_MGR

The SQ VOL_MGR command displays the status of individual data migration volumes. It also displays the host system level information for each device if it was online during system startup.

Format: #SQ VOL_MGR, cuu, count ¦ ALL ¦ NOT_COMPLETE

Parameters: cuu Specifies the host device number

count Specifies the number of devices to display. Possible values are 1 to 256 (decimal), ALL, or NOT_COMPLETE. Comments: The count parameters can display the migration status of all data storage system volumes accessible through that control unit (ALL), a specific number of data storage system devices, or only those data storage system devices that have not completed migration (NOT_COMPLETE).

Example: #SQ VOL_MGR,600,3

This example displays the following fields:

1. Host device number. Field 1 displays "????" for devices not online during startup or put online after the last SC GLOBAL,SSID_REFRESH command.
2. First device address (hex) on the host channel. Field 2 displays "??" for devices not online during startup or put online after the last SC GLOBAL,SSID_REFRESH command.
3. Control unit device number in hex.
4. Migration device number in hex.
5. Device volser. If the device was online at system initialization or during a SC GLOBAL,SSID_REFRESH, the volser is from the UCB; otherwise, it is the volser assigned to the device when the data storage system was installed.
6. Data Migration device status. Valid values are:
   READY=data storage system device is ready to host;
   NRDY=data storage system device is not ready to host;
   NR-MIG=data storage system device is not ready for migration.
7. Original data storage system invalid track count.
8. Data storage system volume invalid track count.
9. Remaining tracks to migrate.
10. Total tracks on volume.
11. Percentage of tracks migrated to data storage system device.
12. Migration rate. Possible values are:
    MAX=maximum migration rate;
    FST=fast migration rate;
    MED=medium migration rate;
    SLO=slow migration rate;
    DEF=default migration rate (maximum).
13. Device data migration enabled indicator (Y/N).

(5) Data Migration Configuration Commands

#SC CNFG_MGR

The SC CNFG_MGR command modifies the global data migration rate in effect for all data migration volumes.

Format: #SC CNFG_MGR, cuu, value

Parameters: cuu Specifies the host device number.

value Rate at which data storage system attempts to transfer data from the original DASD unit. Valid values are FAST, MEDIUM, or SLOW.

#SC VOL_MGR

The SC VOL_MGR command modifies the status of a data migration volume. This configuration command provides the ability to establish/stop idle time data migration for the specified volume(s) or all migration volumes and specify the data migration rate for specified or all data migration volumes. All #SC VOL_MGR commands require the operator to confirm the action you have specified, unless this has been disabled by the OPERATOR_VERIFY sysparm. This confirmation is necessary as some actions may result in loss of data if performed incorrectly. The requirement for confirmation may be bypassed based on the value specified on the OPERATOR_VERIFY initialization parameter.

Format: #SC VOL_MGR, cuu, action, dev#, rate

Parameters: cuu Specifies the host device number.

action See the table of possible actions below.

dev# Specifies the data storage system device number. Valid values are 00 to FF (hex) and ALL.

rate Speed at which migration occurs. Valid values are MAXIMUM, FAST, MEDIUM, and SLOW. Comments: If ALL is specified for the dev# parameter value, then all data migration devices on that controller are affected by this command action. If no dev# parameter is specified, then the host remote mirroring software will attempt to use the cuu parameter to determine the data storage system device number on which to perform the action. The rate parameter is only specified when DM_RATE is the action.

Table of Possible #SC VOL_MGR Actions:

Action	Description
DM_COPY_START	Enable data migration copy process for the specified device(s) during idle time.
DM_COPY_STOP	Stop data migration copy process for the specified device(s) during idle time; only migrate data during normal input/output operations
DM_RATE	Set data migration rate to value specified by the rate parameter.

(6) Remote Mirroring Recovery Procedures Using Host RM Software

Following are specific examples of using the host remote mirroring (RM) software to perform data recovery procedures. "ccu" refers to the host device number, and "dev#" refers to the data storage system logical volume number.

(a) Recovering Using a Remote Host

In the event of a disaster at a local site that renders all equipment (local CPU and data storage system) non-operational, perform the following sequence of steps when using the remote data storage system to recover.

Write-enable all secondary (R2) volumes to the host at the remote site by performing the following two steps:

1. Set all R2 volumes to a "ready" state to the remote host by typing the following command:

#SC VOL,cuu,RDY,ALL

2. Write enable all volumes on the remote data storage system with a remote mirror designation (R2) by typing the following command:

#SC vol,cuu,R/W,ALL

All volumes at the remote data storage system are now available for input/output operations with the host at that site. Before read/write operations can be resumed with the data storage system at the local site, however, all secondary (R2) volumes at the remote data storage system must be set to read-only, not-ready to the host at the remote site, and the resynchronization process established. (Failure to make the secondary (R2) volumes read-only prior to bringing the local data storage system online can result in data corruption and invalid tracks in both the primary (R1) and secondary (R2) volumes.) When the host and data storage system at the local site are ready to be brought back online, perform the following steps:

At the remote site, perform the following four steps:

1. Stop input/output operations with the remote data storage system and vary devices offline from the remote host.
2. Make all secondary (R2) volumes on the remote data storage system read-only and not ready to the remote host (as per the original configuration) by typing the following commands:

#SC VOL,cuu,R/O,ALL and
#SC VOL,cuu,NRDY,ALL

3. Enable all disk adapters on the remote data storage system.
4. Enable the link adapters on the remote data storage system.

At the site of the original disaster (local host and data storage system) perform the following seven steps:

1. Disable the adapters (channel adapters and RLDs) on the local data storage system.
2. Reconnect the link cables from the location they were previously disconnected.
3. IPL the host system.
4. Power up the local data storage system.
5. Enable all disk adapters and link adapters. The two data storage systems begin synchronizing. When the links synchronize, the remote data storage system begins copying its data to the local data storage system.
6. Enable the channel adapters.
7. Have the user vary devices online to the local host and resume operations with the local data storage system.

The operator can view the status of the resynchronization process by issuing: #SQ VOL,cuu,INV_TRKS

(b) Testing Recovery Procedures

In a normal remote mirroring device relationship, the primary (R1) device may be synchronized with its secondary (R2) device or it may contain updated tracks which the link adapter has not yet sent to the secondary (R2) device (semi-synchronous or adaptive copy state). In addition, in a normal operating environment, the secondary (R2) volume is in a read-only mode. The operator can test recovery procedures by write-enabling the secondary (R2) volumes. To write-enable a secondary (R2) volume, the operator must first suspend remote mirroring operations between the primary (R1) and secondary (R2) volumes, make the devices ready, and then write-enable the secondary (R2) volumes.

(i) Suspending Remote Mirroring Operations

To suspend remote mirroring operations for a single pair, enter the following command at the host with access to the primary (R1) volume: #SC VOL,cuu,RDF-SUSP,dev#. To suspend remote mirroring operations for all remotely mirrored pairs, enter the following command at the host with access to the primary (R1) volume: #SC VOL,cuu,RDF-SUSP,ALL.

(ii) Making Volumes Ready

To make a secondary (R2) volume ready, enter the following command at the host with access to the secondary (R2) volume: #SC VOL,cuu,RDY,dev#. To make all secondary (R2) volumes ready, enter the following command at the host with access to the secondary (R2) volume: #SC VOL,cuu,RDY,ALL.

(iii) Write-Enabling Secondary (R2) Volumes

To write-enable the secondary (R2) volume, enter the following command at the host with access to the secondary (R2) volume: #SC VOL,cuu,R/W,dev#. To write-enable all secondary (R2) volumes, enter the following command at the host with access to the secondary (R2) volume: #SC VOL,cuu,R/W,ALL. Any primary (R1) volume configured with the domino effect option will go RNR (volumes not ready for remote mirroring operation) when remote mirroring operations are suspended. To clear this not ready condition, the operator must disable the domino effect option on those "not ready" volumes, and then enable those devices for remote mirroring operation using the RDF-RDY action with the #SC VOL command.

(iv) To Resume Remote Mirroring Operations

There are several ways to resume remote mirroring operations. The method used will depend on the state of the remotely mirrored pair. This section describes the various methods. (WARNING! Any deviation from the procedures described in this section may result in data corruption! Consult the table of primary (R1)/secondary (R2) volume status below for the appropriate procedure to follow.)

Use the #SQ VOL command to determine the invalid track count of the primary (R1) and secondary (R2) volumes.

Table of Primary (R1)/Secondary (R2) Volume Status

Primary (R1) Volume	Secondary (R2) Volume	Procedure
no invalid tracks	no invalid tracks	see Procedure 1
invalid tracks	no invalid tracks	see Procedure 1
no invalid tracks	invalid tracks	see Procedure 2
invalid tracks	invalid tracks	see Procedure 3

Procedure 1: No Invalid Tracks or Invalid Tracks on Primary (R1) Volume Only. Follow this procedure to resume remote mirroring operations when there are no invalid tracks on the secondary (R2) volume.

1. Make the secondary (R2) volume(s) on the data storage system read-only by typing the following command at the host with access to the secondary (R2) volume(s): #SC VOL,cuu,R/O[,dev#|,ALL].

2. Make the secondary (R2) volume(s) on the data storage system not ready by typing the following command at the host with access to the secondary (R2) volume(s): #SC VOL,cuu,NRDY[,dev#|,ALL].

3. Resume remote mirroring operations by typing the following command at the host with access to the primary (R1) volume(s): #SC VOL,cuu,RDF-RSUM,ALL

Procedure 2: Invalid Tracks on Secondary (R2) Volume Only. Follow this procedure to resume remote mirroring operations when there are no invalid tracks on the primary (R1) volume and invalid tracks on the secondary (R2) volume. This procedure copies the information on the primary (R1) volume to the secondary (R2) volume.

A. To Discard All Updates to the secondary (R2) Volume:

1. Verify that the current synchronization direction is set from primary to secondary (R1→R2) by typing the following command: #SQ GLOBAL. Issue the following command if it is necessary to change the current synchronization direction:

#SC GLOBAL,SYNCH_DIRECTION,R1>R2.

2. Make the secondary (R2) volume(s) on the data storage system read-only by typing the following command at the host with access to the secondary (R2) volume(s): #SC VOL,cuu,R/O[,dev#|,ALL]

3. Make the secondary (R2) volume(s) on the data storage system not ready by typing the following command at the host with access to the secondary (R2) volume(s): #SC VOL,cuu,NRDY[,dev#|,ALL]

4. Determine which secondary (R2) volumes have a non-zero R1 INV_TRKS value by typing: #SQ VOL, cuu,INV_TRKS.

5. For all secondary (R2) volumes with non-zero R1 INV_TRKS values: From the host with access to the secondary (R2) volume:

a. Validate all invalid tracks for the primary (R1) volume (s) on the secondary (R2) volume by typing:

#SC VOL,cuu,VALIDATE[,dev#|,ALL] ('dev#'=secondary (R2) volume with an R1 INV_TRKS value greater than 0).

b. Repeat step a for each secondary (R2) volume with a non-zero R1 INV_TRKS value for a primary (R1) volume. If ALL is the specified parameter then step b is not necessary.

6. Verify all secondary (R2) volumes have an R1 INV_TRKS value equal to 0 by typing : #SQ VOL,cuu, INV_TRKS.

7. For all primary (R1) volumes whose secondary (R2) volume (R2) was write-enabled and had an R1 INV_TRK value greater than 0 (prior to step 2 above): From the host with access to the primary (R1) volume:

a. Invalidate all valid tracks for the secondary (R2) volume on the primary (R1) volume by typing:

#SC VOL,cuu,INVALIDATE[,dev#|,ALL] ('dev#'=primary (R1) volume whose secondary (R2) volume had an R1 INV_TRKS value greater than 0). The host remote mirroring software will monitor the process of invalidating all secondary tracks until complete. This may take up to two minutes on a heavily loaded controller. The host remote mirroring software will not perform any new remote mirroring commands during this process.

8. Resume remote mirroring operation from the host with access to the primary (R1) volumes by typing the following command: #SC VOL,cuu,RDF-RSUM,ALL. Those primary (R1) and secondary (R2) volumes with invalid tracks will begin to synchronize. To view the synchronization process on any device, display that device using the SQ VOL command.

B. To Retain Updates on the Secondary (R2) Volume

This procedure copies the information on the secondary (R2) volume to the primary (R1) volume.

1. Verify that the synchronization direction is set from secondary to primary (R1<R2) by typing the following command: #SQ GLOBAL. Issue the following command if it is necessary to change the current synchronization direction:

#SC GLOBAL,SYNCH_DIRECTION,R1<R2

2. Make the secondary (R2) volume(s) on the data storage system read-only by typing the following command at the host with access to the secondary (R2) volume(s): #SC VOL,cuu,R/O[,dev#|,ALL]

3. Vary the R1 device offline to the host: V cuu,OFFLINE.

4. Make the primary (R1) device unavailable to the host: #SC VOL,cuu,RDF-NRDY

5. Determine which secondary (R2) volumes have a non-zero R1 INV_TRKS value by typing: #SQ VOL, cuu,INV_TRKS.

6. For all secondary (R2) volumes with non-zero R1 INV_TRKS values: From the host with access to the primary (R1) volume:

a. Set R2 invalid tracks to zero and prepare the primary (R1) volume for synchronization by typing: #SC VOL,cuu,VALIDATE[,dev#|,ALL] ('dev#'=primary (R1) volume whose secondary (R2) volume has an R1 INV_TRKS value greater than 0).

b. Repeat step a for each primary (R1) volume with a non-zero R2 INV_TRKS value for a secondary (R2) volume. If ALL is the specified parameter then step b is not necessary.

7. Resume remote mirroring operation from the host with access to the primary (R1) volumes by typing the following command: #SC VOL,cuu,RDF-RSUM[, dev#|,ALL]. Those primary (R1) and secondary (R2) volumes with invalid tracks will begin to synchronize. To view the synchronization process on any device, display that device using the # SQ VOL command from the host with access to the primary (R1) volume(s).

8. Make the R1 device available to the host: #SC VOL,cuu,RDF-RDY

9. Vary the R1 device online to the host: V cuu,online.

Procedure 3: Invalid Tracks on both Primary (R1) and Secondary (R2) Volumes. Follow this procedure to resume remote mirroring operations when there are invalid tracks on both the primary (R1) volume and the secondary (R2) volume. To retain primary (R1) volume updates and discard secondary (R2) volume updates, follow procedure 2A above. To retain secondary (R2) volume updates and discard primary (R1) volume updates, follow procedure 2B above.

Modifications and substitutions by one of ordinary skill in the art are considered to be within the scope of the present invention, which is not to be limited except by the claims which follow.

What is claimed is:

1. A data storage system comprising:

primary data storage; and

a data storage controller for operating the data storage system in a remote copy mode in which the data storage controller receives channel commands from a host

computer, and the data storage controller stores write data from the channel commands in the primary data storage and transmits the write data over a data link to remote data storage,

wherein the data storage controller is programmed for receiving a chain of a plurality of the channel commands from the host computer, bundling the write data for all write commands in the chain into a bundle of write data for transmission over the data link to the remote data storage, decoding the channel commands in the chain to determine when the data storage controller has received a last channel command in the chain, and once the data storage controller has received the last channel command in the chain, transmitting the bundle of write data over the data link to the remote data storage.

2. The data storage system as claimed in claim **1**, wherein the chain defines a write operation with respect to a single volume of data storage, and the data storage controller is programmed to commit to the primary data storage and to the remote data storage results of all channel commands in the chain before commitment of results of any following channel command received by the data storage controller from the host computer.

3. The data storage system as claimed in claim **1**, wherein the data storage controller is programmed to include write data from multiple channel commands in the bundle of write data sent over the data link to the remote data storage.

4. The data storage system as claimed in claim **1**, wherein the data storage controller is programmed to transmit the bundle of write data in a single write command over the data link to the remote data storage.

5. The data storage system as claimed in claim **1**, wherein the chain begins with a channel command specifying a count of a number of following channel commands in the chain.

6. The data storage system as claimed in claim **1**, wherein each of the channel commands in the chain has a flag indicating whether or not an immediately following channel command is chained to said each of the channel commands in the chain.

7. The data storage system as claimed in claim **1**, further including a cache memory for storing the write data, and a buffer for bundling the write data by accumulating, in the buffer, pointers to the write data in the cache memory.

8. A program storage device readable by a data storage system, said program storage device encoding a program for execution by the data storage system for controlling operation of the data storage system in a remote copy mode in which the data storage system receives channel commands from a host computer, and the data storage system stores write data from the channel commands in primary data storage of the data storage system and transmits the write data over a data link to remote data storage,

wherein the program is executable by the data storage system for receiving a chain of a plurality of the channel commands from the host computer, bundling the write data for all write commands in the chain into a bundle of write data for transmission over the data link to the remote data storage, decoding the channel commands in the chain to determine when the data storage controller has received a last channel command in the chain, and once the data storage controller has received the last channel command in the chain, transmitting the bundle of write data over the data link to the remote data storage.

9. The program storage device as claimed in claim **8**, wherein the chain defines a write operation with respect to a single volume of data storage, and the program is executable by the data storage system to commit to the primary data storage and to the remote data storage results of all channel commands in the chain before commitment of results of any following channel command received by the data storage controller from the host computer, and to include write data from multiple channel commands in the bundle of write data sent over the data link to the remote data storage.

10. The program storage device as claimed in claim **8**, wherein the program is executable by the data storage system for transmitting the bundle of write data in a single write command over the data link to the remote data storage.

11. The program storage device as claimed in claim **8**, wherein the chain begins with a channel command specifying a count of a number of following channel command words in the chain.

12. The program storage device as claimed in claim **8**, wherein each of the channel commands in the chain has a flag indicating whether or not an immediately following channel command is chained to said each of the channel commands in the chain.

13. A data storage system comprising:

primary data storage; and

a data storage controller for operating the data storage system in a remote copy mode in which the data storage controller receives channel commands from a host computer, and the data storage controller stores write data from the channel commands in the primary data storage and transmits the write data over a data link to remote data storage,

wherein the data storage controller is programmed for receiving a chain of a multiplicity of the channel commands from the host computer, the chain including at least one transfer-in-channel command indicating that a next channel command to be executed in the chain is not an immediately following channel command in the chain, and for bundling the write data for all write commands in the chain into a bundle of write data for transmission over the data link to the remote data storage, decoding the channel commands in the chain to determine when the data storage controller has received a last channel command in the chain, and once the data storage controller has received the last channel command in the chain, transmitting the bundle of write data over the data link to the remote data storage.

14. The data storage system as claimed in claim **13**, wherein the chain defines a write operation with respect to a single volume of data storage, and the data storage controller is programmed to commit to the primary data storage and to the remote data storage results of all channel commands in the chain before commitment of results of any following channel command received by the data storage controller from the host computer, and to include write data from multiple channel commands in the bundle of write data sent over the data link to the remote data storage.

15. The data storage system as claimed in claim **13**, wherein the data storage controller is programmed to transmit the bundle of write data in a single write command over the data link to the remote data storage.

16. The data storage system as claimed in claim **13**, wherein the channel commands are channel command words in accordance with the International Business Machines (IBM) Corporation's count-key-data (CKD) or extended count-key-data (ECKD) channel command syntax.

17. A program storage device readable by a data storage system, said program storage device encoding a program for execution by the data storage system for controlling operation of the data storage system in a remote copy mode in which the data storage system receives channel commands from a host computer, and the data storage system stores

write data from the channel commands in primary data storage of the data storage system and transmits the write data over a data link to remote data storage,

wherein the program is executable by the data storage system for receiving a chain of a multiplicity of the channel commands from the host computer, the chain including at least one transfer-in-channel command indicating that a next channel command to be executed in the chain is not an immediately following channel command in the chain, and for bundling the write data for all write commands in the chain into a bundle of write data for transmission over the data link to the remote data storage, decoding the channel commands in the chain to determine when the data storage controller has received a last channel command in the chain, and once the data storage controller has received the last channel command in the chain, transmitting the bundle of write data over the data link to the remote data storage.

18. The program storage device as claimed in claim **17**, wherein the chain defines a write operation with respect to a single volume of data storage, and the program is executable by the data storage system to commit to the primary data storage and to the remote data storage results of all channel commands in the chain before commitment of results of any following channel command received by the data storage controller from the host computer, and to include write data from multiple channel commands in the bundle of write data sent over the data link to the remote data storage system.

19. The program storage device as claimed in claim **17**, wherein the program is executable by the data storage system to transmit the bundle of write data in a single write command over the data link to the remote data storage.

20. The program storage device as claimed in claim **17**, wherein the channel commands are channel command words in accordance with the International Business Machines (IBM) Corporation's count-key-data (CKD) or extended count-key-data (ECKD) channel command syntax.

21. A method of operating a data processing system, said data processing system having a first data storage system, a second data storage system, a data link coupled between the first data storage system and the second data storage system for transmission of remote copy data from the first data storage system to the second data storage system, and a host computer coupled to the first data storage system for access to data storage in the first data storage system; said method comprising the steps of:

(a) the host computer sending a chain of a plurality of channel commands to the first data storage system;

(b) the first data storage system receiving the chain from the host computer;

(c) the first data storage system bundling write data for all write commands in the chain into a bundle of write data for transmission over the data link to the second data storage system, the first data storage system decoding the channel commands in the chain to determine when the first data storage system has received a last channel command in the chain, and once the first data storage system has received the last channel command in the chain, transmitting the bundle of write data over the data link to the second data storage system.

22. The method as claimed in claim **21**, wherein the chain defines a write operation with respect to a single volume of data storage, and results of all channel commands in the chain are committed before commitment of results of any following channel command received by the first data storage system from the host computer.

23. The method as claimed in claim **21**, wherein the bundle of write data sent over the data link from the first data storage system to the second data storage system includes write data from multiple channel commands.

24. The method as claimed in claim **21**, wherein the first data storage system transmits the bundle of write data in a single write command over the data link to the second data storage system.

25. The method as claimed in claim **21**, wherein the chain begins with a channel command specifying a count of a number of following channel commands in the chain.

26. The method as claimed in claim **21**, wherein each of the channel commands in the chain has a flag indicating whether or not an immediately following channel command is chained to said each of the channel commands in the chain.

27. The method as claimed in claim **21**, which includes:

the first data storage system storing the write data in a cache memory; and

the first data storage system bundling the write data by accumulating, in a buffer, pointers to the write data in the cache memory.

28. A method of operating a data processing system, said data processing system having a first data storage system, a second data storage system, a data link coupled between the first data storage system and the second data storage system for transmission of remote copy data from the first data storage system to the second data storage system, and a host computer coupled to the first data storage system for access to data storage in the first data storage system; said method comprising the steps of:

(a) the host computer sending a chain of a multiplicity of channel commands to the first data storage system, the chain including at least one transfer-in-channel command indicating that a next channel command to be executed in the chain is not an immediately following channel command in the chain;

(b) the first data storage system receiving the chain from the host computer;

(c) the first data storage system bundling write data for all write commands in the chain into a bundle of write data for transmission over the data link to the second data storage system, the first data storage system decoding the channel commands in the chain to determine when the first data storage system has received a last channel command in the chain, and once the first data storage system has received the last channel command in the chain, transmitting the bundle of write data over the data link to the second data storage system.

29. The method as claimed in claim **28**, wherein the chain defines a write operation with respect to a single volume of data storage, results of all channel commands in the chain are committed before commitment of results of any following channel command received by the first data storage system from the host computer, and the bundle of write data sent over the data link from the first data storage system to the second data storage system includes write data from multiple channel commands.

30. The method as claimed in claim **28**, wherein the first data storage system transmits the bundle of write data in a single write command over the data link to the second data storage system.

31. The method as claimed in claim **28**, wherein the channel commands are channel command words in accordance with the International Business Machines (IBM) Corporation's count-key-data (CKD) or extended count-key-data (ECKD) channel command syntax.

* * * * *