**IN THE UNITED STATES DISTRICT COURT**
**FOR THE DISTRICT OF DELAWARE**

MIDWEST ENERGY EMISSIONS CORP. and MES INC.,

Plaintiffs,

v.

VISTRA ENERGY CORP., IPH, LLC, DYNEGY INC., ILLINOIS POWER RESOURCES GENERATING, LLC, DYNEGY MIDWEST GENERATION LLC, DYNEGY MIAMI FORT, LLC, AEP GENERATION RESOURCES INC., SOUTHWESTERN ELECTRIC POWER CO., CARDINAL OPERATING COMPANY, LLC, AEP TEXAS INC., NRG ENERGY, INC., NRG TEXAS POWER LLC, MIDWEST GENERATION EME, LLC, MIDWEST GENERATION, LLC, TALEN ENERGY CORPORATION, TALEN ENERGY HOLDINGS, INC., BRANDON SHORES LLC, TALEN GENERATION LLC, AND H. A. WAGNER LLC, ARTHUR J. GALLAGHER & CO., GALLAGHER CLEAN ENERGY, LLC, AND AJG COAL, LLC, DTE REF HOLDINGS, LLC, DTE REF HOLDINGS II LLC, CERT COAL HOLDINGS LLC, CERT HOLDINGS LLC, CERT HOLDINGS 2018, LLC, CERT OPERATIONS LLC, CERT OPERATIONS II LLC, CERT OPERATIONS III LLC, CERT OPERATIONS IV LLC, CERT OPERATIONS V LLC, CERT OPERATIONS RCB LLC, CHEM-MOD LLC, AJG IOWA REFINED COAL LLC, JOPPA REFINED COAL LLC, THOMAS HILL REFINED COAL LLC, WAGNER COALTECH LLC, WALTER SCOTT REFINED COAL LLC, LOUISA REFINED COAL, LLC, BELLE RIVER FUELS COMPANY, LLC, ARBOR FUELS COMPANY, LLC, PORTAGE FUELS COMPANY, LLC, AND JOHN DOE LLCS

Defendants.

CIVIL ACTION NO. _____

**ORIGINAL COMPLAINT FOR PATENT INFRINGEMENT**

**JURY TRIAL DEMANDED**

Plaintiffs Midwest Energy Emissions Corp. and MES Inc. (collectively, "ME2C") files this Original Complaint against Defendants Vistra Energy Corp., IPH, LLC, Dynegy Inc., Illinois Power Resources Generating, LLC, Dynegy Midwest Generation LLC, and Dynegy Miami Fort, LLC (collectively, "Vistra"); AEP Generation Resources Inc., Southwestern Electric Power Co., Cardinal Operating Company, LLC, and AEP Texas Inc. (collectively, "AEP"); NRG Energy, Inc., NRG Texas Power LLC, Midwest Generation EME, LLC, Midwest Generation, LLC (collectively, "NRG"); Talen Energy Corporation, Talen Energy Holdings, Inc., Brandon Shores LLC, Talen Generation LLC, and H. A. Wagner LLC (collectively, "Talen"), (Vistra, AEP, NRG, and Talen, are referred to collectively as "Coal Plant Defendants"); Arthur J. Gallagher & Co., Gallagher Clean Energy, LLC, and AJG Coal, LLC ("AJG"); DTE REF Holdings, LLC, DTE REF Holdings II LLC ("DTE"); CERT Coal Holdings LLC, CERT Holdings LLC, CERT Holdings 2018, LLC, CERT Operations LLC, CERT Operations II LLC, CERT Operations III LLC, CERT Operations IV LLC, CERT Operations V LLC, CERT Operations RCB LLC ("CERT"); Chem-Mod LLC ("Chem-Mod"); and the additional named and unnamed entities referred to below as the "RC Defendants": AJG Iowa Refined Coal LLC, Joppa Refined Coal LLC, Thomas Hill Refined Coal LLC, Wagner Coaltech LLC, Walter Scott Refined Coal LLC, Louisa Refined Coal, LLC, Belle River Fuels Company, LLC, Arbor Fuels Company, LLC, Portage Fuels Company, LLC, and John Doe LLCs (all of these entities are referred to collectively as "Defendants") for patent infringement under 35 U.S.C. § 271. Plaintiff alleges, based on its own personal knowledge with respect to its own actions and based upon information and belief with respect to all others' actions, as follows:

## THE PARTIES

1. Midwest Energy Emissions Corp. is a Delaware corporation with its principal place of business at 670 D Enterprise Drive, Lewis Center, Ohio 43035.

2. MES Inc. is a North Dakota corporation with its principal place of business at 311 S. 4th St. STE 118, Grand Forks, ND 58201.

3. Defendant Vistra Energy Corp. is a Delaware corporation with its principal place

of business at 6555 Sierra Drive, Irving, TX 75039. Vistra Energy Corp. has designated Capitol Services, Inc., 1675 S. State St., Ste. B, Dover, DE 19901 as its agent for service of process.

4. Defendant IPH, LLC is a Delaware limited liability company with its principal place of business at 134 Cips Lane, Suite 1400, Coffeen, IL 62017. IPH, LLC has designated Capitol Services, Inc., 1675 S. State St., Ste. B, Dover, DE 19901 as its agent for service of process.

5. Defendant Dynegy Inc. is a Delaware corporation with its principal place of business at 601 Travis St., Suite 1400, Houston, TX 77002. Dynegy Inc. has designated Capitol Services, Inc., 1675 S. State St., Ste. B, Dover, DE 19901 as its agent for service of process.

6. Defendant Illinois Power Resources Generating, LLC is a Delaware limited liability company with its principal place of business at 601 Travis St., Suite 1400, Houston, TX 77002. Illinois Power Resources Generating, LLC has designated Capitol Services, Inc., 1675 S. State St., Ste. B, Dover, DE 19901 as its agent for service of process.

7. Defendant Dynegy Midwest Generation LLC is a Delaware limited liability company with its principal place of business at 2828 North Monroe St., Decatur, IL 62526. Dynegy Midwest Generation LLC has designated Capitol Services, Inc., 1675 S. State St., Ste. B, Dover, DE 19901 as its agent for service of process.

8. Defendant Dynegy Miami Fort, LLC is a Delaware limited liability company with its principal place of business at 601 Travis St., Suite 1400, Houston, TX 77002. Dynegy Miami Fort, LLC has designated Capitol Services, Inc., 1675 S. State St., Ste. B, Dover, DE 19901 as its agent for service of process.

9. Defendant AEP Generation Resources Inc. is a Delaware corporation with its principal place of business at 1 Riverside Plaza, Columbus, OH 43215. AEP Generation Resources has designated The Corporation Trust Company, Corporation Trust Center, 1209 Orange Street, Wilmington, Delaware 19801 as its agent for service of process.

10. Defendant Southwestern Electric Power Company is a Delaware corporation with its principal place of business at 1 Riverside Plaza, Columbus, OH 43215. Southwestern Electric

Power Co. has designated The Corporation Trust Company, Corporation Trust Center, 1209 Orange Street, Wilmington, Delaware 19801 as its agent for service of process.

11. Defendant Cardinal Operating Company, LLC is a Delaware limited liability company with its principal place of business at 1 Riverside Plaza, Columbus, OH 43215. Cardinal Operating Company, LLC has designated The Corporation Trust Company, Corporation Trust Center, 1209 Orange Street, Wilmington, Delaware 19801 as its agent for service of process.

12. Defendant AEP Texas Inc. is a Delaware corporation with its principal place of business at 1616 Woodall Rodgers Freeway, Dallas, TX 75202. AEP Texas Inc. has designated The Corporation Trust Company, Corporation Trust Center, 1209 Orange Street, Wilmington, Delaware 19801 as its agent for service of process.

13. Defendant NRG Energy, Inc. is a Delaware corporation with its principal place of business at 804 Carnegie Center, Princeton, NJ 08540. NRG Energy, Inc. has designated The Corporation Trust Company, Corporation Trust Center, 1209 Orange Street, Wilmington, Delaware 19801 as its agent for service of process.

14. Defendant NRG Texas Power LLC is a Delaware limited liability company with its principal place of business at 1301 McKinney St., Ste. 2300, Houston, TX 77010. NRG Texas Power LLC has designated The Corporation Trust Company, Corporation Trust Center, 1209 Orange Street, Wilmington, Delaware 19801 as its agent for service of process.

15. Defendant Midwest Generation EME, LLC is a Delaware limited liability company with its principal place of business at 440 South La Salle St., One Financial Place, Suite 3500, Chicago, IL 60605. Midwest Generation EME, LLC has designated The Corporation Trust Company, Corporation Trust Center, 1209 Orange Street, Wilmington, Delaware 19801 as its agent for service of process.

16. Defendant Midwest Generation, LLC is a Delaware limited liability company with its principal place of business at 440 South La Salle St., One Financial Place, Suite 3500, Chicago, IL 60605. Midwest Generation, LLC has designated The Corporation Trust Company,

Corporation Trust Center, 1209 Orange Street, Wilmington, Delaware 19801 as its agent for service of process.

17. Defendant Talen Energy Corporation is a Delaware corporation with its principal place of business at 835 Hamilton St., Allentown, PA 18101. Talen Energy Corporation has designated Corporation Service Company, 251 Little Falls Drive, Wilmington, DE 19808 as its agent for service of process.

18. Defendant Talen Energy Holdings, Inc. is a Delaware corporation with its principal place of business at Two North Ninth St., Allentown, PA 18101. Talen Energy Holdings, Inc. has designated Corporation Service Company, 251 Little Falls Drive, Wilmington, DE 19808 as its agent for service of process.

19. Defendant Brandon Shores LLC is a Delaware limited liability company with its principal place of business at 2030 Brandon Shores Rd., Curtis Bay, MD 21226. Brandon Shores LLC has designated Corporation Service Company, 251 Little Falls Drive, Wilmington, DE 19808 as its agent for service of process.

20. Defendant Talen Generation LLC is a Delaware limited liability company with its principal place of business at Two North Ninth St., Allentown, PA 18101. Talen Generation LLC has designated Corporation Service Company, 251 Little Falls Drive, Wilmington, DE 19808 as its agent for service of process.

21. Defendant H. A. Wagner LLC is a Delaware limited liability company with its principal place of business at 3000 Brandon Shores Rd., Baltimore. MD 21226. H. A. Wagner LLC has designated Corporation Service Company, 251 Little Falls Drive, Wilmington, DE 19808 as its agent for service of process.

22. Defendant Arthur J. Gallagher & Co. is a Delaware corporation with its principal place of business at 2850 Gold Road, Rolling Meadows, IL 60008. Arthur J. Gallagher & Co. has designated Corporation Service Company, 251 Little Falls Drive, Wilmington, DE 19808 as its agent for service of process.

23. Defendant Gallagher Clean Energy, LLC is a Delaware limited liability company

with its principal place of business at Two Pierce Place, Itasca, IL 60143. Gallagher Clean Energy, LLC has designated Corporation Service Company, 251 Little Falls Drive, Wilmington, DE 19808 as its agent for service of process.

24. Defendant AJG Coal, LLC is a Delaware limited liability company with its principal place of business at Two Pierce Place, Itasca, IL 60143. AJG Coal, LLC has designated Corporation Service Company, 251 Little Falls Drive, Wilmington, DE 19808 as its agent for service of process.

25. Defendant DTE REF Holdings, LLC is a Delaware limited liability company with its principal place of business at One Energy Plaza, Detroit, MI 48226. DTE REF Holdings, LLC has designated The Corporation Trust Company, Corporation Trust Center, 1209 Orange Street, Wilmington, Delaware 19801 as its agent for service of process.

26. Defendant DTE REF Holdings II LLC is a Delaware limited liability company with its principal place of business at One Energy Plaza, Detroit, MI 48226. DTE REF Holdings II LLC has designated The Corporation Trust Company, Corporation Trust Center, 1209 Orange Street, Wilmington, Delaware 19801 as its agent for service of process.

27. Defendant CERT Coal Holdings, LLC is a Delaware limited liability company with its principal place of business at 2100 Southbridge Parkway, Suite 585, Birmingham, AL 35209. CERT Coal Holdings, LLC has designated Corporation Service Company, 251 Little Falls Drive, Wilmington, DE 19808 as its agent for service of process.

28. Defendant CERT Holdings, LLC is a Delaware limited liability company with its principal place of business at 2100 Southbridge Parkway, Suite 585, Birmingham, AL 35209. CERT Holdings, LLC has designated Corporation Service Company, 251 Little Falls Drive, Wilmington, DE 19808 as its agent for service of process.

29. Defendant CERT Holdings 2018, LLC is a Delaware limited liability company with its principal place of business at 2100 Southbridge Parkway, Suite 585, Birmingham, AL 35209. CERT Holdings 2018, LLC has designated Corporation Service Company, 251 Little Falls Drive, Wilmington, DE 19808 as its agent for service of process.

30. Defendant CERT Operations, LLC is a Delaware limited liability company with its principal place of business at 2100 Southbridge Parkway, Suite 585, Birmingham, AL 35209. CERT Operations LLC has designated Corporation Service Company, 251 Little Falls Drive, Wilmington, DE 19808 as its agent for service of process.

31. Defendant CERT Operations II, LLC is a Delaware limited liability company with its principal place of business at 2100 Southbridge Parkway, Suite 585, Birmingham, AL 35209. CERT Operations II, LLC has designated Corporation Service Company, 251 Little Falls Drive, Wilmington, DE 19808 as its agent for service of process.

32. Defendant CERT Operations III, LLC is a Delaware limited liability company with its principal place of business at 2100 Southbridge Parkway, Suite 585, Birmingham, AL 35209. CERT Operations III, LLC has designated Corporation Service Company, 251 Little Falls Drive, Wilmington, DE 19808 as its agent for service of process.

33. Defendant CERT Operations IV, LLC is a Delaware limited liability company with its principal place of business at 2100 Southbridge Parkway, Suite 585, Birmingham, AL 35209. CERT Operations IV, LLC has designated Corporation Service Company, 251 Little Falls Drive, Wilmington, DE 19808 as its agent for service of process.

34. Defendant CERT Operations V, LLC is a Delaware limited liability company with its principal place of business at 2100 Southbridge Parkway, Suite 585, Birmingham, AL 35209. CERT Operations V, LLC has designated Corporation Service Company, 251 Little Falls Drive, Wilmington, DE 19808 as its agent for service of process.

35. Defendant CERT Operations RCB, LLC is a Delaware limited liability company with its principal place of business at 2100 Southbridge Parkway, Suite 585, Birmingham, AL 35209. CERT Operations RCB, LLC has designated Corporation Service Company, 251 Little Falls Drive, Wilmington, DE 19808 as its agent for service of process.

36. Defendant Chem-Mod LLC is a Delaware limited liability company with its principal place of business at Two Pierce Place, Itasca, Illinois 60143. Chem-Mod LLC has designated Corporation Service Company, 251 Little Falls Drive, Wilmington, DE 19808 as its

agent for service of process. On information and belief, Defendant A.J. Gallagher holds a controlling interest in Chem-Mod, and has controlled and directed the actions and infringement of Chem-Mod alleged herein.

37. Defendant AJG Iowa Refined Coal LLC is a Delaware limited liability company with its principal place of business at Two Pierce Place, Itasca, IL 60143. AJG Iowa Refined Coal LLC has designated Cogency Global Inc., 850 New Burton Road, Suite 201, Dover DE 19904 as its agent for service of process.

38. Defendant Joppa Refined Coal LLC is a Delaware limited liability company with its principal place of business at or near the Joppa Power Station near Joppa, IL. Joppa Refined Coal LLC has designated Corporation Service Company, 251 Little Falls Drive, Wilmington, DE 19808 as its agent for service of process.

39. Defendant Thomas Hill Refined Coal LLC is a Delaware limited liability company with its principal place of business at or near the Thomas Hill Energy Center near Clifton Hill, MO. Thomas Hill Refined Coal LLC has designated Corporation Service Company, 251 Little Falls Drive, Wilmington, DE 19808 as its agent for service of process.

40. Defendant Wagner Coaltech LLC is a Delaware limited liability company with its principal place of business at or near the Herbert A. Wagner Generating Station in Anne Arundel County, MD. Wagner Coaltech LLC has designated Corporation Service Company, 251 Little Falls Drive, Wilmington, DE 19808 as its agent for service of process.

41. Defendant Walter Scott Refined Coal LLC is a Delaware limited liability company with its principal place of business at or near the Council Bluffs Energy Center (also known as the Walter Scott Energy Center) near Council Bluffs, IA. Walter Scott Refined Coal LLC has designated Corporation Service Company, 251 Little Falls Drive, Wilmington, DE 19808 as its agent for service of process.

42. Defendant Louisa Refined Coal, LLC is a Delaware limited liability company with its principal place of business at 6901 Dodge St., Suite 201, Omaha, NE 68132. Louisa Refined Coal, LLC has designated Corporation Service Company, 251 Little Falls Drive,

Wilmington, DE 19808 as its agent for service of process.

43. Defendant Belle River Fuels Company, LLC is a Delaware limited liability company with its principal place of business at or near the Belle River Power Plant in Saint Claire County, MI. Belle River Fuels Company, LLC has designated The Corporation Trust Company, Corporation Trust Center, 1209 Orange Street, Wilmington, Delaware 19801 as its agent for service of process.

44. Defendant Arbor Fuels Company, LLC is a Delaware limited liability company with its principal place of business at 414 S. Main St, Suite 600, Ann Arbor, MI 48104. Arbor Fuels Company, LLC has designated The Corporation Trust Company, Corporation Trust Center, 1209 Orange Street, Wilmington, Delaware 19801 as its agent for service of process.

45. Defendant Portage Fuels Company, LLC is a Delaware limited liability company with its principal place of business 414 S. Main St, Suite 600, Ann Arbor, MI 48104. Portage Fuels Company, LLC has designated The Corporation Trust Company, Corporation Trust Center, 1209 Orange Street, Wilmington, Delaware 19801 as its agent for service of process.

46. On information and belief, AJG, DTE, CERT, and/or Chem-Mod have used additional Delaware John Doe LLCs to collect Section 45 Tax Credits and to provide refined coal to additional coal-fired power plants in a manner that induces and or contributes to infringement of the patents-in-suit.

## JURISDICTION AND VENUE

47. This action includes a claim of patent infringement arising under the patent laws of the United States, 35 U.S.C. §§ 1 *et seq*. This Court has jurisdiction over this action pursuant to 28 U.S.C. §§ 1331 and 1338(a).

48. This Court has personal jurisdiction over Defendants, because each is incorporated in and/or a limited liability company formed in Delaware. In addition, Defendants have conducted business in this district by taking advantage of the laws of this district and by forming and controlling affiliated entities involved in the acts of infringement described below.

49. Venue is proper in this district pursuant to 28 U.S.C. § 1400(b) with respect to

each Defendant that resides in this District.

## ASSERTED PATENTS

50. On July 9, 2019, the United States Patent and Trademark Office duly and legally issued U.S. Patent No. 10,343,114 (the "'114 patent") entitled "Sorbents for the Oxidation and Removal of Mercury." A copy of the '114 patent is attached as Exhibit A.

51. On May 1, 2012, the United States Patent and Trademark Office duly and legally issued U.S. Patent No. 8,168,147 (the "'147 patent") entitled "Sorbents for the Oxidation and Removal of Mercury." A copy of the '147 patent is attached as Exhibit B.

## FACTUAL ALLEGATIONS

### The Federal Government Resolves to Regulate Mercury Emissions from Power Plants

52. In 1990, Congress passed the Clean Air Act Amendments of 1990.

53. That law required the U.S. Environmental Protection Agency (EPA) to study the impact of various air pollutants, including mercury.

54. To assist in the research, in 1992, the EPA established a National Center for Excellence at the Energy & Environmental Research Center (EERC) referred to as the Center for Air Toxic Metals (CATM).

55. In 1997 and 1998, the EPA issued two reports to Congress: Mercury Study Report to Congress (issued December 1997) and Study of Hazardous Air Pollutant Emissions from Electric Utility Steam (issued February 1998). As an outcome of these studies, the EPA found a pressing need for regulation of mercury pollution from coal-fired power plants. Unfortunately, it also found that no existing technologies were up to the task of significantly reducing the mercury pollution from those plants.

56. In the wake of these reports, various governmental and industry organizations injected millions of dollars into basic scientific research and experimental studies in the search for new mercury capture technologies.

### The Inventors of the Patents-in-Suit Develop Mercury Capture Solutions

57. Researchers at the EERC were instrumental in developing new techniques for

studying this problem and ultimately solving it.

58. In 2002, the EPA surveyed the state of research in this field and produced a follow-up report: Control of Mercury Emissions from Coal-Fired Electric Utility Boilers: Interim Report. This report identified some promising areas of research, and it noted that some technologies were available for reducing mercury emissions. However, the EPA recognized that there was no universal solution to this problem and that more work remained to be done.

59. During this time, the inventors of the patents-in-suit were researching the issue of mercury capture at the EERC. Through their work, they uncovered some of the complex chemistry that occurs in a coal-fired boiler.

60. They further discovered a number of methods for improving mercury capture. In particular, they found that applying a halogen additive such as bromine and bromide compounds onto coal or into a combustion chamber, when combined with sorbent injection, could dramatically reduce the mercury content of coal-fired power plant emissions.

61. By 2004, the inventors filed a provisional application that would lead to the patents in suit. This application, and the subsequently issued patents, cover some of their discoveries and various applications of their discoveries. In particular, the inventors discovered, and ultimately proved, the benefits of combining halogen treatments (e.g., bromine containing materials) in-flight with backend sorbents (e.g., activated carbon).

62. In 2011, the EPA finalized the first national standards to reduce mercury and other toxic air pollution from coal-fired plants (the Mercury and Air Toxics Standards or "MATS"). Most coal-fired power plants were required to comply with this rule by 2016.

**Congress Creates the Section 45 Refined Coal Tax Credit**

63. While the EPA was working on addressing the issue of mercury emissions, Congress also took action. In 2004, Congress passed the American Jobs Act, which created a new tax credit related to the production of refined coal (referred to as "Section 45 tax credits").

64. Under this law, a refined coal producer can receive an inflation-adjusted tax credit for each ton of refined coal sold to a power plant that results in a 40% reduction in mercury

emissions and a 20% reduction in NOx emissions. This law has resulted in companies receiving hundreds of millions of dollars in tax credits each year.

65. Because of this highly lucrative law, financial services companies such as AJG jumped at the chance to collect the tax credits.

**AJG, DTE, CERT, Chem-Mod, and the RC Defendants Reap Staggering Profits from Section 45 Tax Credits**

66. AJG is an insurance brokerage and risk management services firm.

67. AJG Chief Financial Officer Douglas Howell has claimed credit for designing a business model to maximize profits based on Section 45 tax credits.

68. "Our return on investment is staggering," Mr. Howell told analysts in a March 14, 2018 call. "Oh, 200 percent, 300 percent, 400 percent, 500 percent. I mean, just because it costs so little to develop" facilities.

69. As a result, Mr. Howell has explained that AJG will not be paying much, if any, U.S. federal income tax for many years to come.

70. According to the AJG business model, AJG does not build standalone facilities to refine coal that is then shipped around the country for use at coal plants.

71. Instead, AJG uses shell companies that are designed to lose money each year, but that ultimately result in AJG profiting from Section 45 tax credits.

72. Specifically, AJG forms a limited liability company ("LLC") to be associated with a particular coal-fired power plant (the "Refined Coal LLC"). The paragraphs below refer to actions taken by a Refined Coal LLC, but AJG maintains control throughout this process. For example, AJG maintains majority control, or, if it lacks majority control, AJG requires that all major decisions obtain approval from AJG.

73. Through its controlling interests in Refined Coal LLCs and Chem-Mod, AJG causes Chem-Mod to contract with the Refined Coal LLC to provide Chem-Mod chemicals, and technical, regulatory, and/or operational support to the Refined Coal LLC.

74. The Refined Coal LLC rents space on-site at a power plant where it can briefly take

possession of coal from the power plant. It purchases coal from the plant, treats it with Chem-Mod chemicals, and then sells the coal—now considered "refined coal"—back to the coal-fired power plant at the same price or for a loss.

75. For example, the Refined Coal LLC can take possession of coal as it moves along a conveyor belt toward a combustion chamber. It can then add chemicals to the coal and return it to a conveyor belt leading to the combustion chamber.

76. The Chem-Mod chemicals applied to the coal include $Br_2$, HBr, a bromide compound such as $CaBr_2$, or a combination thereof.

77. One important aspect of this plan is that an LLC is a pass-through entity for tax purposes. That is, the benefits of the Section 45 tax credits pass through to AJG and other owners of the Refined Coal LLC.

78. AJG sells ownership in the LLC based at least in part on the value of those tax credits.

79. By using the Refined Coal LLCs as shell companies, AJG is able to operate companies that are designed to lose money, but that ultimately benefit AJG because they allow it to obtain hundreds of millions of dollars in federal tax credits.

80. This model has been emulated by others, such as DTE and CERT.

81. DTE and CERT both use Chem-Mod supplied chemicals and provide refined coal through Refined Coal LLCs in order to obtain Section 45 Tax Credits.

**ME2C Attempts to Compete in the Market for Mercury Capture Technologies**

82. ME2C is the commercial extension of the patented technology. As the exclusive licensee, and later assignee, of the patents-in-suit, ME2C developed, marketed, and sold products and services that practice the patented technology.

83. ME2C's product development efforts have been led by named inventor and Chief Technology Officer John Pavlish. ME2C has developed both sorbent enhancement additives and activated carbon sorbents for practicing the technology described in the patents-in-suit and for practicing other patented methods owned by ME2C.

84. ME2C has also publicized its patent portfolio and explained the scope of the patented technology through its website, its interactions with customers and potential customers, and through presentations at industry events such as the MEGA Symposium, the Energy, Utility & Environment Conference, Lignite Energy Conference, and the Air Quality Conference. Representatives of Defendants have attended these conferences and received materials from such conferences.

85. ME2C has attempted to compete in the market for mercury capture technologies. In particular it attempted to negotiate supply contracts with coal-fired power plants in anticipation of MATS regulations that became effective in 2015 and 2016, and also periodically afterwards as plants re-evaluate their MATS compliance strategies.

86. However, ME2C it is at an unfair disadvantage with respect to the RC Defendants that encourage power plants to use ME2C's patented technology instead of developing new technologies for refined coal. These RC Defendants induce power plants to infringe the patents-in-suit by offering the technology at no or artificially low costs to the plant.

87. AJG CFO Douglas Howell has explained, "the reason why [coal-fired power plants] participate in these [Section 45 Tax Credit] projects is that they've got a financial incentive to participate in it, but they also receive the improved environmental results basically for free and they get a better ash and favorable operating results."

88. In addition, because the Coal Plant Defendants have decided to infringe ME2C's patents, they now purchase various materials from different suppliers at artificially deflated prices and employ them in a manner that infringes ME2C's patents.

89. Despite these difficulties, ME2C has sold its products and services to various power plants throughout the country.

**ME2C's Interactions with Defendant Vistra**

90. In 2012, ME2C contracted with Luminant Generation Company LLC ("Luminant") to perform testing of the patented methods at various Luminant power plants.

91. At least as early as 2012, ME2C informed Luminant of its patent portfolio,

including the ’147 patent and parent applications to the ’114 patent.

92. By 2012, ME2C had also explained that its patents cover the use of halogen-based sorbent enhancement additives and backend carbon-based sorbents.

93. After successfully testing its patented technology at Luminant plants, Luminant signed a Master Supply Agreement with ME2C.

94. Luminant is now a subsidiary of Vistra.

95. Through Luminant, ME2C has informed Vistra of the patents-in-suit and also explained that its patents cover the use of halogen-based sorbent enhancement additives and backend carbon-based sorbents.

96. ME2C also attempted to develop business with other affiliates of Vistra. For example, ME2C has had various interactions with Vistra subsidiary Dynegy Inc. and its subsidiaries (“Dynegy”).

97. Beginning in 2011, ME2C and Dynegy evaluated the ME2C process for use at the Joppa Steam Plant in Massac county Illinois.

98. As part of that process, ME2C informed Dynegy of its patent portfolio, including the ’147 patent and parent applications to the ’114 patent.

99. ME2C has informed Dynegy that its patents cover the use of halogen-based sorbent enhancement additives and backend carbon-based sorbents.

100. Although the test results were favorable, Dynegy ultimately determined not to sign a supply agreement with ME2C.

101. Throughout 2014 and 2015, ME2C had further interactions with Dynegy and conducted a further demonstration at the Edwards Power Station in Peoria county Illinois.

102. Again, Dynegy declined to sign a supply agreement with ME2C.

103. In 2018, Vistra acquired Dynegy.

104. That same year, Vistra requested that ME2C again perform a demonstration at the Joppa Steam Plant.

105. ME2C informed Vistra of its patent portfolio and also explained that its patents

cover the use of halogen-based sorbent enhancement additives and backend carbon-based sorbents.

106. ME2C also attempted to negotiate a supply agreement with Vistra for the Joppa Steam Plant.

107. However, the Joppa Steam Plant was receiving refined coal treated with halogen from a refined coal producer.

108. Joppa Refined Coal LLC, has and continues to provide refined coal to the Joppa Steam Plant. AJG, Chem-Mod and Joppa Refined Coal LLC provide financial, technical, and contractual incentives to Vistra to burn refined coal as part of their scheme to collect Section 45 Tax Credits.

109. The Joppa Steam Plant is owned and/or operated by Vistra in the United States.

110. Vistra negotiates and/or procures products and/or services related to mercury control for use at the Joppa Steam Plant.

111. The Joppa Steam Plant has burned and/or burns coal that has added bromine and/or bromide.

112. The Joppa Steam Plant combusts coal along with added bromine and/or bromide.

113. The Joppa Steam Plant injects sorbent material comprising activated carbon downstream of the combustion chamber.

114. The Joppa Steam Plant contracts with Joppa Refined Coal LLC to obtain coal with added bromine and/or bromide.

115. The Joppa Steam Plant uses added bromine and/or bromide and activated carbon to ensure compliance with federal and state MATS regulations.

116. Despite being aware of ME2C's patents, and recognizing the benefits of the technology through its subsidiary Luminant, Vistra has elected to infringe the patents-in-suit at its coal-fired power plants, including at the Joppa Steam Plant.

**ME2C's Interactions with Defendant AEP**

117. In 2011, ME2C met with officials at AEP to discuss ME2C's mercury capture products and services.

118. In or around that meeting, ME2C informed AEP of its patent portfolio.

119. The parties did not enter into a commercial agreement at that time.

120. In 2013, representatives of AEP attended the Air Quality 9 conference and received a presentation on the patented technology which identified the ’147 patent and parent applications to the ’114 patent.

121. In 2016, ME2C and AEP discussed potential work related to AEP’s H.W. Pirkey Power Plant.

122. ME2C and AEP, including its subsidiary Southwestern Electric Power Co. contracted for ME2C to provide demonstration testing at the H.W. Pirkey Power Plant.

123. Through those interactions, ME2C again reminded AEP of its patent portfolio and explained that its patents covered the use of halogen-based sorbent enhancement additives and backend carbon-based sorbents.

124. ME2C specifically identified the ’147 patent and parent applications to the ’114 patent to AEP.

125. Between 2016 and 2018, ME2C explained its technology to AEP, provided technical and economic presentations, and performed demonstration testing at AEP’s H.W. Pirkey Power Plant in Harrison county, Texas.

126. The H.W. Pirkey Power Plant is owned and/or operated by AEP in the United States.

127. AEP negotiates for and/or procures products and/or services related to mercury control for use at the H.W. Pirkey Power Plant.

128. The H.W. Pirkey Power Plant combusts coal along with added bromine and/or bromide.

129. The H.W. Pirkey Power Plant injects sorbent material comprising activated carbon downstream of the combustion chamber.

130. The H.W. Pirkey Power Plant employs halogenated PAC (Powdered Activated Carbon) sorbent injection as a form of mercury control.

131. The H.W. Pirkey Power Plant uses added bromine and/or bromide and activated carbon to ensure compliance with federal MATS regulations.

132. Despite knowledge of ME2C's patents, AEP has elected to infringe ME2C's patents at its coal-fired power plants including at the H.W. Pirkey Power Plant.

**ME2C's Interactions with NRG**

133. In 2012, ME2C had various interactions with NRG to discuss ME2C's patented technology.

134. Over the next few years, NRG evaluated its options for coming into compliance with upcoming MATS regulations.

135. During that time, ME2C identified its patents to NRG and explained the operation of its patented technology.

136. The parties also considered having ME2C perform various demonstrations of the technology at NRG power plants.

137. Nonetheless, NRG elected to infringe ME2C's patents.

**ME2C's Interactions with Defendant Talen**

138. Talen owns and/or operates the Brunner Island, Colstrip, and Montour power plants.

139. Prior to 2015 those plants were owned and/or operated by PPL.

140. In 2013, representatives of PPL attended the Air Quality 9 conference and received a presentation on the patented technology which identified the '147 patent and parent applications to the '114 patent.

141. In 2013, ME2C met with PPL to discuss the use of ME2C's patented technology at power plants in the PPL fleet, including Brunner Island, Colstrip, and Montour.

142. ME2C specifically identified the '147 patent and the parent patent to the '114 patent, and explained that these patents covered the use of halogen-based sorbent enhancement additives and backend carbon-based sorbents.

143. In 2015, PPL spun off a portion of its business to form Talen.

144. Despite being aware of ME2C's patents, Talen has elected to infringe those patents.

**ME2C's Interactions with Defendant AJG, DTE, CERT, Chem-Mod, and RC Defendants**

145. AJG, DTE, CERT, Chem-Mod, and RC Defendants have worked with the EERC to conduct testing related to their coal treatment processes. For example, they have relied on the EERC to demonstrate that the processes employed by refined coal facilities qualify for Section 45 Tax Credits. Through those interactions, it is likely that they became aware of the patents-in-suit and/or related applications as they were initially developed by the inventors while they were at the EERC.

146. In addition, at least Chem-Mod participates in conferences where ME2C describes its patented technology. For example, Chem-Mod president Murray F. Abbott attended the 2018 MEGA conference where ME2C described the technology at issue in this case and explained that it was covered by its patents. ME2C also referred attendees to its website which has additional information regarding its patents.

147. Given the close relationship between Chem-Mod, AJG, DTE, CERT, and the RC Defendants, those Defendants know of ME2C's patented technology and patent portfolio and/or are willfully blind to ME2C's patents.

**Defendants' Acts of Infringement**

148. The Coal Plant Defendants each operate at least one coal-fired power plant where they combust coal in a combustion chamber with bromine and/or bromide that has been added to the coal and/or that has been provided to the combustion chamber, and where they inject a sorbent material comprising activated carbon downstream of the combustion chamber (the "Accused Coal Plants"). The Accused Coal Plants are not limited to the specifically named, exemplary coal plants named above.

149. In doing so, the Coal Plant Defendants perform the methods claimed by the patents-in-suit, and thus directly infringe the patents-in-suit.

150. To the extent an Accused Coal Plant is owned by a subsidiary company, its parent (one or more of the named Coal Plant Defendants) also indirectly infringe(s) by inducing the subsidiary to perform the steps of the patented methods.

151. The parent companies do so by exercising control over subsidiaries, providing technical, administrative, logistical and financial services to subsidiaries, and/or negotiating standard form or bulk agreements for products and services related to mercury control.

152. AJG, DTE, CERT, Chem-Mod, and the RC Defendants operate RC facilities that receive coal, add bromine and/or bromide such as $CaBr_2$ to the coal, and then provide that "refined" coal to a coal-fired power plant that injects a sorbent material comprising activated carbon downstream of the combustion chamber (the "Accused RC Facilities").

153. Chem-Mod provides chemicals and/or refined coal to at least some of the Accused Coal Plants and Accused RC Facilities.

154. Chem-Mod also assists in operating the Accused Coal Plants and Accused RC Facilities in connection with administering the chemicals supplied by Chem-Mod.

155. Given the location and operation of the Accused RC Facilities and the contractual relationships between Accused RC Facilities and associated coal-fired power plants, the refined coal provided by each Accused RC Facility has no substantial non-infringing use.

156. In addition, AJG, DTE, CERT, Chem-Mod, and the RC Defendants provide financial incentives to operators of coal-fired power plants to participate in a Section 45 Tax Credit scheme.

157. AJG, DTE, CERT, Chem-Mod, and the RC Defendants condition participation in an activity or receipt of a benefit, i.e., the financial benefits of participating in the Section 45 Tax Credit scheme and the technical and environmental benefits of using refined coal, upon performance of a step or steps of a patented method, i.e., the combusting of coal with added bromine and/or bromide, and they establish the manner or timing of that performance by requiring the power plant to use the refined coal and by providing the refined coal directly onto conveyances leading to the combustor.

158. AJG, DTE, and CERT, directly and in concert with their subsidiaries including Chem-Mod and the RC Defendants, have engaged in a pattern of conduct intended to induce and/or contribute to the infringement of others, including the Coal Plant Defendants and the

operators of coal-fired power plants connected to an Accused RC Facility. These actions have included:

a. forming several of the RC Defendants specifically for the purpose of using Chem-Mod products in the manner described below as infringing;
b. providing several of the RC Defendants and operators of coal-fired power plants with chemicals used to directly infringe the patents-in-suit;
c. Building the core components of the RC facilities to use Chem-Mod chemicals;
d. Connecting the RC facilities to coal-fired power plants;
e. Placing the RC Facilities into service;
f. Providing the RC Defendants with operational support, regulatory, and technical support necessary to use Chem-Mod chemicals at the Accused RC Facilities and Accused Coal Plants;
g. Testing the performance of the RC Facilities for regulatory reasons and to obtain Section 45 Tax Credits;
h. Conditioning participation in the Section 45 Tax Credits program on use of Chem-Mod chemicals at the Accused RC Facilities;
i. Limiting the amount of capital and/or supplies of the RC Defendants;
j. Using the RC Defendants to claim Section 45 Tax Credits;
k. Tailoring the treatments applied to coal for each individual power plant; and
l. Modifying the amount of bromine and/or bromide added to coal sold to Coal Plant Defendants and/or operators of coal-fired power plants connected to an RC Facility in connection with plants' MATS obligations.

159. AJG, Chem-Mod, their associated RC Defendants, and the operators of coal-fired power plants connected to an RC Facility that is owned by AJG and/or its subsidiaries are involved in a joint enterprise to infringe the patents-in-suit.

160. AJG, Chem-Mod, their associated RC Defendants, and the operators of coal-fired power plants connected to an RC Facility that is owned by AJG and/or its subsidiaries share a common purpose, namely, obtaining Section 45 Tax Credits and compliance with mercury capture regulations by performing the patented methods.

161. DTE, Chem-Mod, their associated RC Defendants, and the operators of coal-fired power plants connected to an RC Facility that is owned by DTE and/or its subsidiaries are involved in a joint enterprise to infringe the patents-in-suit.

162. DTE, Chem-Mod, their associated RC Defendants, and the operators of coal-fired power plants connected to an RC Facility that is owned by DTE and/or its subsidiaries share a common purpose, namely, obtaining Section 45 Tax Credits and compliance with mercury capture regulations by performing the patented methods.

163. CERT, Chem-Mod, their associated RC Defendants, and the operators of coal-fired power plants connected to an RC Facility that is owned by DTE and/or its subsidiaries are involved in a joint enterprise to infringe the patents-in-suit.

164. CERT, Chem-Mod, their associated RC Defendants, and the operators of coal-fired power plants connected to an RC Facility that is owned by DTE and/or its subsidiaries share a common purpose, namely, obtaining Section 45 Tax Credits and compliance with mercury capture regulations by performing the patented methods.

165. Thus, AJG, DTE, CERT, Chem-Mod, and the RC Defendants induce and/or contribute to direct infringement of the patents-in-suit by coal-fired power plant operators, and thus indirectly infringe the patents-in-suit.

166. Defendants' infringement of the Patents-in-Suit is willful. Defendants continue to commit acts of infringement despite a high likelihood that its actions constitute infringement, and Defendants knew or should have known that their actions constituted an unjustifiably high risk of infringement.

167. In accordance with 35 U.S.C. § 287, Defendants have actual notice and knowledge of all of the Patents-in-Suit as described above and no later than the filing of this

Complaint and/or the date this Complaint was served upon each Defendant. In any event, Defendants may not avail themselves of 35 U.S.C. § 287 as a defense because ME2C is under no obligation to mark performance of the patented methods.

168. Defendants acts of infringement have been willful as of the date they became aware of the patented technology and the patents-in-suit, and in any event no later than the filing of this Complaint and/or the date this Complaint was served upon each Defendant.

**Defendants' Interactions With Each Other Related to Infringement**

169. Each Coal Plant Defendant consists of a parent company and various subsidiaries. These various entities work together to procure materials and manage Accused Power Plants.

170. Each of AJG, DTE, and CERT own and operate Refined Coal LLCs (including the other named RC Defendants) that use Chem-Mod materials at the Accused Coal Plants and coal plants with associated Accused RC Facilities.

171. Vistra's Joppa Coal plant, and Talen's Brandon Shores, Herbert Wagner, and Montour coal plants obtain refined coal from AJG, Chem-Mod, and their associated Refined Coal LLCs.

172. Vistra's Duck Creek and Newton coal plants obtain refined coal from DTE, Chem-Mod, and their associated Refined Coal LLCs.

173. The Conesville power plant in Ohio has been/is owned and/or operated by Vistra and AEP.

174. At least Defendants Vistra, NRG, and Talen have owned and/or operated Accused Coal Plants using Chem-Mod products to directly infringe the patents-in-suit and thus they are jointly, severally, and/or in the alternative liable with Chem-Mod with respect to those plants.

175. At least Defendants AJG, DTE, Chem-Mod and their associated Refined Coal LLCs have induced and/or contributed to infringement at Vistra and Talen Accused Coal Plants and coal plants associated with Accused RC Facilities, and thus those parties are jointly, severally, and/or in the alternative liable with respect to those plants.

176. Each of the RC Defendants is owned and/or operated by AJG, DTE, and/or CERT,

and each uses Chem-Mod to induce and/or contribute to infringement. Thus, each RC Defendant is jointly, severally, and/or in the alternative liable with respect to Chem-Mod and the Defendant that is its associated owner/operator.

177. Defendants AEP and Vistra have owned and/or operated some of the same Accused Coal Plants, and thus are jointly, severally, and/or in the alternative liable with respect to those plants.

**COUNT ONE: INFRINGEMENT OF THE '114 PATENT**

178. ME2C incorporates by reference the preceding paragraphs as if fully set forth herein.

179. U.S. Patent No. 10,343,114 (the "'114 patent"), entitled "Sorbents for the Oxidation and Removal of Mercury", was issued on July 9, 2019, naming Edwin S. Olson, Michael J. Holmes and John H. Pavlish as the inventors. Exhibit A ('114 Patent).

180. ME2C owns all rights, title, and interest in the '114 Patent, and holds all substantial rights pertinent to this suit, including the right to sue and recover for all past, current, and future infringement.

181. The '114 Patent is valid and enforceable and directed to patentable subject matter.

182. Defendants infringe claims 1-30 of the '114 patent.

183. ME2C provides the following explanation of infringement with regard to an exemplary claim.

184. Claim 25 of the '114 patent recites: A method of separating mercury from a mercury-containing gas.

185. The Coal Plant Defendants and power plants connected to an Accused RC Facility perform this method in order to comply with federal and/or state mercury regulations.

186. Claim 25 of the '114 patent recites: combusting coal in a combustion chamber to provide the mercury-containing gas, wherein the coal comprises added $Br_2$, HBr, a bromide compound, or a combination thereof, added to the coal upstream of the combustion chamber, or the combustion chamber comprises added Br2, HBr, a bromide compound, or a combination

thereof, or a combination thereof.

187. The Coal Plant Defendants and power plants connected to an Accused RC Facility perform this step by burning coal with an added $Br_2$, HBr, a bromide compound, or a combination thereof and/or by adding $Br_2$, HBr, a bromide compound, or a combination thereof to the combustion chamber.

188. Claim 25 of the ’114 patent recites: injecting a sorbent material comprising activated carbon into the mercury containing gas downstream of the combustion chamber.

189. The Coal Plant Defendants and power plants connected to an Accused RC Facility perform this step by injecting activated carbon sorbent downstream of the combustion chamber.

190. Claim 25 of the ’114 patent recites: contacting mercury in the mercury-containing gas with the sorbent, to form a mercury/sorbent composition.

191. The Coal Plant Defendants and power plants connected to an Accused RC Facility perform this step because mercury contained in the gas exiting the combustion chamber contacts the sorbent as all of this material is contained in the same gas.

192. Claim 25 of the ’114 patent recites: separating the mercury/sorbent composition from the mercury-containing gas, to form a cleaned gas.

193. The Coal Plant Defendants and power plants connected to an Accused RC Facility perform this step using equipment to collect the mercury captured by the sorbent in order to comply with mercury regulations.

194. The Coal Plant Defendants have and continue to directly infringe, literally and/or under the doctrine of equivalents, the ’114 patent under 35 U.S.C. § 271(a).

195. AJG, DTE, CERT, Chem-Mod and the RC Defendants provide coal with added $Br_2$, HBr, a bromide compound, or a combination thereof to coal-fired power plants connected to an Accused RC Facility.

196. The coal with added $Br_2$, HBr, a bromide compound, or a combination thereof provided by AJG, DTE, CERT, Chem-Mod and the RC Defendants is not a staple article or

commodity of commerce suitable for substantial non-infringing use. This coal is supplied to a conveyance that moves the coal toward the combustion chamber of a power plant that directly infringes the ’114 patent. In addition, AJG, DTE, CERT, Chem-Mod and the RC Defendants tailor the amount of $Br_2$, HBr, a bromide compound, or a combination thereof added to the coal for the specific needs of the power plant.

197. AJG, DTE, CERT, Chem-Mod and the RC Defendants took the above-described actions intending to cause infringing acts by others.

198. AJG, DTE, CERT, Chem-Mod and the RC Defendants have actual knowledge of the ‘114 patent and know that actions described above, if taken, would constitute infringement of that patent. Alternatively, AJG, DTE, CERT, Chem-Mod and the RC Defendants believe there is a high probability that others would infringe the ‘114 patent but have remained willfully blind to the infringing nature of those actions. AJG, DTE, CERT, Chem-Mod and the RC Defendants therefore infringe the ’114 patent under 35 U.S.C. § 271(b) with respect to each coal-fired power plant connected to an Accused RC Facility.

199. AJG, DTE, CERT, Chem-Mod and the RC Defendants indirectly infringes the ’114 patent by contributing to infringement by others, such as its customers and end-users by offering to sell and/or selling within the United States coal with added $Br_2$, HBr, a bromide compound, or a combination thereof used to practice one or more processes/methods covered by the claims of the ‘114 patent and that constitute a material part of the inventions claimed in the ‘114 patent. AJG, DTE, CERT, Chem-Mod and the RC Defendants therefore infringe the ’114 patent under 35 U.S.C. § 271(c) with respect to each coal-fired power plant connected to an Accused RC Facility.

200. Defendants’ acts of infringement have caused damage to ME2C. ME2C is entitled to recover from Defendants the damages sustained by ME2C as a result of Defendants’ wrongful acts in an amount subject to proof at trial. In addition, the infringing acts and practices of Defendants have caused, are causing, and, unless such acts and practices are enjoined by the Court, will continue to cause immediate and irreparable harm to ME2C for which there is no

adequate remedy at law, and for which ME2C is entitled to injunctive relief under 35 U.S.C. § 283.

**COUNT TWO: INFRINGEMENT OF THE '147 PATENT**

201. ME2C incorporates by reference the preceding paragraphs as if fully set forth herein.

202. U.S. Patent No. 8,168,147 (the "'147 patent"), entitled "Sorbents for the Oxidation and Removal of Mercury", was issued on May 1, 2012, naming Edwin S. Olson, Michael J. Holmes and John H. Pavlish as the inventors. Exhibit B ('147 Patent).

203. Midwest Energy Emissions Corp. owns by assignment all rights, title, and interest in the '147 Patent, and holds all substantial rights pertinent to this suit, including the right to sue and recover for all past, current, and future infringement.

204. The '147 Patent is valid and enforceable and directed to patentable subject matter.

205. Defendants infringe claims 17-20 of the '147 patent.

206. ME2C provides the following explanation of infringement with regard to an exemplary claim.

207. Claim 17 of the '147 patent recites: "A method for separating mercury from a mercury containing gas."

208. The Coal Plant Defendants and power plants connected to an Accused RC Facility perform this method in order to comply with federal and/or state mercury regulations.

209. Claim 17 of the '147 patent recites: "promoting at least a portion of a particulate sorbent material comprising activated carbon by chemically reacting the sorbent material with a bromine containing promoter to form a promoted brominated sorbent, wherein the bromine containing promoter is in gaseous form, vapor form, or non-aqueous liquid form, and wherein the activated carbon contains graphene sheets having carbene species edge sites which react with the bromine containing promoter to form a carbocation paired with a bromide anion in the promoted brominated sorbent for oxidation of the mercury."

210. The Coal Plant Defendants and power plants connected to an Accused RC Facility

perform this step because they burn coal with added $Br_2$, HBr, a bromide compound, or a combination thereof and/or they provide $Br_2$, HBr, a bromide compound, or a combination thereof into the combustion zone with the coal. The bromine containing promoter is in gaseous form when it comes into contact with activated carbon added by the Coal Plant Defendants and/or power plants connected to an Accused RC Facility. This contact causes the recited chemical reaction to occur.

211. Claim 17 of the ’147 patent recites: “chemically reacting elemental mercury in the mercury containing gas with the promoted brominated sorbent to form a mercury/sorbent chemical composition.”

212. As noted above, the Coal Plant Defendants and power plants connected to an Accused RC Facility perform this step such that the recited chemical reaction occurs.

213. Claim 17 of the ’147 patent recites: “separating particulates from the mercury containing gas, the particulates including ash and the mercury/sorbent chemical composition.”

214. The Coal Plant Defendants and power plants connected to an Accused RC Facility perform this method in order to comply with federal and/or state mercury regulations.

215. Claim 17 of the ’147 patent recites: “A method according to claim 1, further comprising injecting the particulate sorbent material at a sorbent material injection rate and injecting separately the bromine containing promoter into a gas stream whereby in-flight reaction produces the promoted brominated sorbent, wherein the promoter is reacted in the gas phase or as a vapor, wherein the promoter is added at from about 1 to about 30 grams per 100 grams of the sorbent material.”

216. The Coal Plant Defendants and power plants connected to an Accused RC Facility perform this step because they burn coal with added $Br_2$, HBr, a bromide compound, or a combination thereof and/or they provide $BR_2$, HBr, a bromide compound, or a combination thereof into the combustion zone with the coal. In either case, the bromine containing promoter is injected into a gas stream, and it later comes into contact with activated carbon sorbent added by the Coal Plant Defendants and/or power plants connected to an Accused RC Facility. This

contact causes in-flight promotion of the sorbent.

217. The bromine containing promoter is added at from about 1 to 30 grams per 100 grams of the sorbent material.

218. The Coal Plant Defendants have and continue to directly infringe, literally and/or under the doctrine of equivalents, the ’147 patent under 35 U.S.C. § 271(a).

219. AJG, DTE, CERT, Chem-Mod and the RC Defendants provide coal with added $Br_2$, HBr, a bromide compound, or a combination thereof to coal-fired power plants connected to an Accused RC Facility.

220. The coal with added $Br_2$, HBr, a bromide compound, or a combination thereof provided by AJG, DTE, CERT, Chem-Mod and the RC Defendants is not a staple article or commodity of commerce suitable for substantial non-infringing use. This coal is supplied to a conveyance that moves the coal toward the combustion chamber of a power plant that directly infringes the ’147 patent. In addition, AJG, DTE, CERT, Chem-Mod and the RC Defendants tailor the amount of $Br_2$, HBr, a bromide compound, or a combination thereof added to the coal for the specific needs of the power plant.

221. AJG, DTE, CERT, Chem-Mod and the RC Defendants took the above-described actions intending to cause infringing acts by others.

222. AJG, DTE, CERT, Chem-Mod and the RC Defendants have actual knowledge of the ‘147 patent and know that actions described above, if taken, would constitute infringement of that patent. Alternatively, AJG, DTE, CERT, Chem-Mod and the RC Defendants believe there is a high probability that others would infringe the ‘147 patent but have remained willfully blind to the infringing nature of those actions. AJG, DTE, CERT, Chem-Mod and the RC Defendants therefore infringe the ’147 patent under 35 U.S.C. § 271(b) with respect to each coal-fired power plant connected to an Accused RC Facility.

223. AJG, DTE, CERT, Chem-Mod and the RC Defendants indirectly infringes the ’147 patent by contributing to infringement by others, such as its customers and end-users by offering to sell and/or selling within the United coal with added $BR_2$, HBR, a bromide

compound, or a combination thereof used to practice one or more processes/methods covered by the claims of the '114 patent and that constitute a material part of the inventions claimed in the '114 patent. AJG, DTE, CERT, Chem-Mod and the RC Defendants therefore infringe the '147 patent under 35 U.S.C. § 271(c) with respect to each coal-fired power plant connected to an Accused RC Facility.

224. Defendants' acts of infringement have caused damage to ME2C. ME2C is entitled to recover from Defendants the damages sustained by ME2C as a result of Defendants' wrongful acts in an amount subject to proof at trial. In addition, the infringing acts and practices of Defendants have caused, are causing, and, unless such acts and practices are enjoined by the Court, will continue to cause immediate and irreparable harm to ME2C for which there is no adequate remedy at law, and for which ME2C is entitled to injunctive relief under 35 U.S.C. § 283.

## JURY DEMAND

Plaintiff hereby demands a trial by jury on all issues so triable.

## PRAYER FOR RELIEF

WHEREFORE Plaintiff Midwest Energy Emissions Corp. asks this Court for an order granting the following relief:

a. A judgment in favor of Plaintiff that Defendants have infringed, either literally and/or under the doctrine of equivalents, the '114 and '147 patents;

b. A judgment and order finding that Defendants' infringement has been willful;

c. A permanent injunction prohibiting Defendants from further acts of infringement;

d. A judgment and order requiring Defendants to pay Plaintiff its damages, costs, expenses, and any enhanced damages to which Plaintiff is entitled for Defendants' infringement;

e. A judgment and order requiring Defendants to provide an accounting and to pay supplemental damages to Plaintiff, including without limitation, pre-judgment and post-judgment interest;

f. A judgment and order finding that this is an exceptional case within the meaning

of 35 U.S.C. § 285 and awarding Plaintiff its reasonable attorneys' fees against Defendants; and

g. Any and all other relief as the Court may deem appropriate and just under the circumstances.

Dated: July 17, 2019

Respectfully submitted,

**DEVLIN LAW FIRM LLC**

/s/ *James M. Lennon* _____

James M. Lennon (Bar No. 4570)
1526 Gilpin Avenue
Wilmington, Delaware 19806
Telephone: (302) 449-9010
Facsimile: (302) 353-4251

**CALDWELL CASSADY CURRY PC**
2101 Cedar Springs Road, Suite 1000
Dallas, Texas 75201
Phone: (214) 888-4848
(214) 888-4849 (*fax*)
bcaldwell@caldwellcc.com
jcassady@caldwellcc.com
acurry@caldwellcc.com
jnemunaitis@caldwellcc.com

Bradley W. Caldwell
Texas Bar No. 24040630
Jason D. Cassady
Texas Bar No. 24045625
John Austin Curry
Texas Bar No. 24059636
Justin T. Nemunaitis
Texas Bar No. 24065815

***Attorneys for Plaintiffs***
***Midwest Energy Emissions Corp. and MES, Inc.***

# *Exhibit A*

US010343114B2

(12) **United States Patent**
**Olson et al.**

(10) **Patent No.: US 10,343,114 B2**
(45) **Date of Patent: *Jul. 9, 2019**

(54) **SORBENTS FOR THE OXIDATION AND REMOVAL OF MERCURY**

(71) Applicant: **Midwest Energy Emissions Corp**, Lewis Center, OH (US)

(72) Inventors: **Edwin S. Olson**, Grand Forks, ND (US); **Michael J. Holmes**, Thompson, ND (US); **John H. Pavlish**, East Grand Forks, MN (US)

(73) Assignee: **Midwest Energy Emissions Corp**, Lewis Center, OH (US)

( * ) Notice: Subject to any disclaimer, the term of this patent is extended or adjusted under 35 U.S.C. 154(b) by 0 days.

This patent is subject to a terminal disclaimer.

(21) Appl. No.: **15/978,760**

(22) Filed: **May 14, 2018**

(65) **Prior Publication Data**

US 2018/0257031 A1 Sep. 13, 2018

**Related U.S. Application Data**

(60) Continuation-in-part of application No. 15/295,594, filed on Oct. 17, 2016, which is a continuation of

(Continued)

(51) **Int. Cl.**
***B01D 53/64*** (2006.01)
***B01J 20/34*** (2006.01)

(Continued)

(52) **U.S. Cl.**
CPC ..... ***B01D 53/64*** (2013.01); ***B01D 53/10*** (2013.01); ***B01D 53/346*** (2013.01); ***B01D 53/83*** (2013.01);

(Continued)

(58) **Field of Classification Search**
None
See application file for complete search history.

(56) **References Cited**

U.S. PATENT DOCUMENTS

1,984,164 A 12/1934 Stock
2,317,857 A 4/1943 Soday

(Continued)

FOREIGN PATENT DOCUMENTS

CA 1099490 A 4/1981
CA 2150529 A1 12/1995

(Continued)

OTHER PUBLICATIONS

"U.S. Appl. No. 10/554,018 Response filed Nov. 1, 2010 to Final Office Action dated Apr. 27, 2010", 17 pgs.

(Continued)

*Primary Examiner* — Amber R Orlando
(74) *Attorney, Agent, or Firm* — Schwegman Lundberg & Woessner, P.A.

(57) **ABSTRACT**

A promoted carbon and/or non-carbon base sorbent are described that are highly effective for the removal of mercury from flue gas streams. The promoted sorbent comprises a carbon and/or non-carbon base sorbent that has reacted with and contains forms of halogen and halides. Optional components may be added to increase and/or preserve reactivity and mercury capacity. These may be added directly with the base sorbent, or in-flight within a gas stream (air, flue gas, etc.), to enhance base sorbent performance and/or mercury capture. Mercury removal efficiencies obtained exceed conventional methods. The promoted sorbent can be regenerated and reused. Base sorbent treatment and preparation methods are also described. New

(Continued)

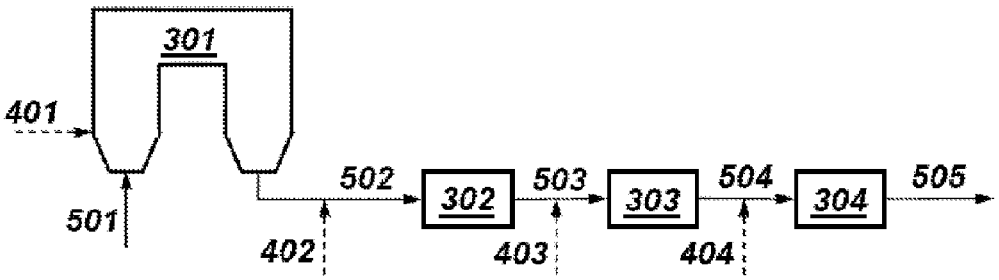

methods for in-flight preparation, introduction, and control of the active base sorbent into the mercury contaminated gas stream are described.

**30 Claims, 6 Drawing Sheets**

**Related U.S. Application Data**

application No. 14/102,896, filed on Dec. 11, 2013, now Pat. No. 9,468,886, which is a continuation of application No. 12/429,058, filed on Apr. 23, 2009, now Pat. No. 8,652,235, which is a continuation-in-part of application No. 12/201,595, filed on Aug. 29, 2008, which is a division of application No. 11/209,163, filed on Aug. 22, 2005, now Pat. No. 7,435,286.

(60) Provisional application No. 60/605,640, filed on Aug. 30, 2004.

(51) **Int. Cl.**

| | |
|---|---|
| ***B01J 20/22*** | (2006.01) |
| ***B01J 20/28*** | (2006.01) |
| ***B01J 20/20*** | (2006.01) |
| ***B01J 20/12*** | (2006.01) |
| ***B01J 20/10*** | (2006.01) |
| ***B01J 20/04*** | (2006.01) |
| ***B01J 20/02*** | (2006.01) |
| ***B01D 53/34*** | (2006.01) |
| ***B01D 53/83*** | (2006.01) |
| ***B01D 53/96*** | (2006.01) |
| ***B01D 53/10*** | (2006.01) |

(52) **U.S. Cl.**

CPC ..... ***B01D 53/96*** (2013.01); ***B01J 20/027*** (2013.01); ***B01J 20/0262*** (2013.01); ***B01J 20/04*** (2013.01); ***B01J 20/041*** (2013.01); ***B01J 20/043*** (2013.01); ***B01J 20/10*** (2013.01); ***B01J 20/106*** (2013.01); ***B01J 20/12*** (2013.01); ***B01J 20/20*** (2013.01); ***B01J 20/223*** (2013.01); ***B01J 20/28004*** (2013.01); ***B01J 20/3416*** (2013.01); *B01D 2251/108* (2013.01); *B01D 2253/102* (2013.01); *B01D 2257/602* (2013.01); *B01D 2258/0283* (2013.01); *B01D 2259/128* (2013.01); *B01J 2220/42* (2013.01)

(56) **References Cited**

U.S. PATENT DOCUMENTS


| | | | | |
|---|---|---|---|---|
| 3,194,629 | A | 7/1965 | Dreibelbis et al. | |
| 3,341,185 | A | 9/1967 | Kennedy, Sr. | |
| 3,662,523 | A | 5/1972 | Revoir et al. | |
| 3,786,619 | A | 1/1974 | Melkersson | |
| 3,826,618 | A | 7/1974 | Capuano | |
| 3,849,267 | A | 11/1974 | Hilgen et al. | |
| 3,876,393 | A | 4/1975 | Kasai et al. | |
| 3,935,708 | A | 2/1976 | Harrewijne et al. | |
| 4,013,516 | A | 3/1977 | Greenfield et al. | |
| 4,094,777 | A | 6/1978 | Sugier et al. | |
| 4,101,631 | A | 7/1978 | Ambrosini et al. | |
| 4,196,173 | A | 4/1980 | DeJong et al. | |
| 4,338,896 | A | 7/1982 | Papasideris | |
| 4,342,192 | A | 8/1982 | Heyn et al. | |
| 4,500,327 | A | 2/1985 | Nishino et al. | |
| 4,530,765 | A | 7/1985 | Sabherwal | |
| 4,699,896 | A | 10/1987 | Sing et al. | |
| 4,708,853 | A | 11/1987 | Matviya et al. | |
| 4,772,455 | A | 9/1988 | Izumi et al. | |
| 4,786,483 | A | 11/1988 | Audeh | |
| 4,814,152 | A | 3/1989 | Yan | |
| 4,820,318 | A | 4/1989 | Chang et al. | |
| 4,889,698 | A | 12/1989 | Moller et al. | |
| 4,956,162 | A | 9/1990 | Smith et al. | |
| 5,245,120 | A | 9/1993 | Srinivasachar et al. | |
| 5,288,306 | A | 2/1994 | Aibe et al. | |
| 5,300,137 | A | 4/1994 | Weyand et al. | |
| 5,336,835 | A | 8/1994 | McNamara | |
| 5,346,674 | A | 9/1994 | Weinwurm et al. | |
| 5,409,522 | A | 4/1995 | Durham et al. | |
| 5,419,834 | A | 5/1995 | Straten | |
| 5,435,980 | A * | 7/1995 | Felsvang | B01D 53/10 423/210 |
| 5,462,908 | A | 10/1995 | Liang et al. | |
| 5,480,619 | A | 1/1996 | Johnson et al. | |
| 5,500,306 | A | 3/1996 | Hsu et al. | |
| 5,505,766 | A | 4/1996 | Chang | |
| 5,569,436 | A * | 10/1996 | Lerner | B01D 53/64 110/235 |
| 5,575,982 | A | 11/1996 | Reiss et al. | |
| 5,607,496 | A | 3/1997 | Brooks | |
| 5,672,323 | A | 9/1997 | Bhat et al. | |
| 5,695,726 | A | 12/1997 | Lerner | |
| 5,785,935 | A | 7/1998 | Fristad et al. | |
| 5,827,352 | A | 10/1998 | Altman et al. | |
| 5,891,324 | A | 4/1999 | Ohtsuka | |
| 6,001,762 | A | 12/1999 | Harmer et al. | |
| 6,013,593 | A | 1/2000 | Lee et al. | |
| 6,027,551 | A | 2/2000 | Hwang et al. | |
| 6,074,974 | A | 6/2000 | Lee et al. | |
| 6,080,281 | A | 6/2000 | Attia | |
| 6,103,205 | A | 8/2000 | Wojtowicz et al. | |
| 6,136,072 | A | 10/2000 | Sjostrom et al. | |
| 6,136,749 | A * | 10/2000 | Gadkaree | B01D 53/8665 502/180 |
| 6,214,304 | B1 | 4/2001 | Rosenthal et al. | |
| 6,258,334 | B1 | 7/2001 | Gadkaree et al. | |
| 6,284,199 | B1 | 9/2001 | Downs et al. | |
| 6,342,462 | B1 | 1/2002 | Kulprathipanja | |
| 2,456,272 | A1 | 2/2002 | Pahlman et al. | |
| 6,372,187 | B1 * | 4/2002 | Madden | B01D 53/508 110/345 |
| 6,375,909 | B1 | 4/2002 | Dangtran et al. | |
| 6,383,981 | B1 | 5/2002 | Blankenship et al. | |
| 6,471,936 | B1 | 10/2002 | Chen et al. | |
| 6,475,451 | B1 | 11/2002 | Leppin et al. | |
| 6,475,471 | B1 | 11/2002 | Wehrli | |
| 6,528,030 | B2 | 3/2003 | Madden et al. | |
| 6,558,454 | B1 * | 5/2003 | Chang | B01D 53/10 110/342 |
| 6,576,585 | B2 | 6/2003 | Fischer et al. | |
| 6,579,507 | B2 | 6/2003 | Pahlman et al. | |
| 6,596,661 | B2 | 7/2003 | Neufert | |
| 6,610,263 | B2 | 8/2003 | Pahlman et al. | |
| 6,638,485 | B1 | 10/2003 | Iida et al. | |
| 6,719,828 | B1 * | 4/2004 | Lovell | B01D 53/02 423/210 |
| 6,808,692 | B2 | 10/2004 | Oehr | |
| 6,818,043 | B1 * | 11/2004 | Chang | B01D 53/64 423/213.2 |
| 6,848,374 | B2 * | 2/2005 | Srinivasachar | B01D 53/10 110/165 R |
| 6,878,358 | B2 | 4/2005 | Vosteen et al. | |
| 6,942,840 | B1 | 9/2005 | Broderick | |
| 6,953,494 | B2 | 10/2005 | Nelson, Jr. et al. | |
| 6,960,329 | B2 | 11/2005 | Sellakumar | |
| 7,017,330 | B2 | 3/2006 | Bellows | |
| 7,081,434 | B2 | 7/2006 | Sinha | |
| 7,124,591 | B2 | 10/2006 | Baer et al. | |
| 7,211,707 | B2 | 5/2007 | Axtell et al. | |
| 7,247,279 | B2 | 7/2007 | Pahlman et al. | |
| 7,293,414 | B1 | 11/2007 | Huber | |
| 7,435,286 | B2 | 10/2008 | Olson et al. | |
| 7,442,239 | B2 | 10/2008 | Armstrong et al. | |
| 7,479,263 | B2 | 1/2009 | Chang et al. | |
| 7,514,052 | B2 * | 4/2009 | Lissianski | B01D 53/56 423/210 |

(56) **References Cited**

U.S. PATENT DOCUMENTS

| | | | | |
|---|---|---|---|---|
| 7,521,032 | B2 | 4/2009 | Honjo et al. | |
| 7,544,338 | B2 | 6/2009 | Honjo et al. | |
| 7,563,311 | B2 | 7/2009 | Graham | |
| 7,611,564 | B2 | 11/2009 | Mcchesney et al. | |
| 7,622,092 | B2 | 11/2009 | Honjo et al. | |
| 7,722,843 | B1 | 5/2010 | Srinivasachar | |
| 7,767,174 | B2 | 8/2010 | Lui et al. | |
| 7,780,765 | B2 * | 8/2010 | Srinivasachar | B01D 53/10 110/203 |
| 7,938,571 | B1 | 5/2011 | Irvine | |
| 7,942,566 | B1 | 5/2011 | Irvine | |
| 8,007,749 | B2 | 8/2011 | Chang et al. | |
| 8,080,088 | B1 | 12/2011 | Srinivasachar | |
| 8,168,147 | B2 | 5/2012 | Olson et al. | |
| 8,168,149 | B2 | 5/2012 | Gal et al. | |
| 8,173,566 | B2 | 5/2012 | Olson et al. | |
| 8,216,535 | B2 | 7/2012 | Pollack et al. | |
| 8,512,655 | B2 | 8/2013 | Olson et al. | |
| 8,652,235 | B2 | 2/2014 | Olson et al. | |
| 8,821,819 | B2 | 9/2014 | Olson et al. | |
| 9,011,805 | B2 | 4/2015 | Olson et al. | |
| 9,468,886 | B2 | 10/2016 | Olson et al. | |
| 9,662,629 | B2 | 5/2017 | Olson et al. | |
| 9,669,355 | B2 | 6/2017 | Olson et al. | |
| 9,757,689 | B2 | 9/2017 | Olson et al. | |
| 10,130,930 | B2 | 11/2018 | Olson | |
| 2001/0002387 | A1 | 5/2001 | Tsutsumi et al. | |
| 2001/0003116 | A1 | 6/2001 | Neufert | |
| 2002/0033097 | A1 | 3/2002 | El-shoubary et al. | |
| 2002/0043496 | A1 | 4/2002 | Boddu et al. | |
| 2002/0134242 | A1 | 9/2002 | Yang et al. | |
| 2002/0150516 | A1 | 10/2002 | Pahlman et al. | |
| 2003/0057293 | A1 | 3/2003 | Boecking | |
| 2003/0104937 | A1 | 6/2003 | Sinha | |
| 2003/0136509 | A1 | 7/2003 | Virtanen | |
| 2003/0206843 | A1 | 11/2003 | Nelson, Jr. | |
| 2003/0206846 | A1 | 11/2003 | Jangbarwala | |
| 2004/0003716 | A1 * | 1/2004 | Nelson, Jr. | B01D 53/02 95/134 |
| 2004/0013589 | A1 | 1/2004 | Vosteen et al. | |
| 2004/0076570 | A1 | 4/2004 | Jia | |
| 2004/0086439 | A1 * | 5/2004 | Vosteen | B01D 53/64 423/210 |
| 2004/0109800 | A1 | 6/2004 | Pahlman et al. | |
| 2005/0000197 | A1 | 1/2005 | Krantz | |
| 2005/0019240 | A1 | 1/2005 | Lu et al. | |
| 2005/0074380 | A1 | 4/2005 | Boren et al. | |
| 2005/0147549 | A1 | 7/2005 | Lissianski et al. | |
| 2005/0227146 | A1 | 10/2005 | Ghantous et al. | |
| 2006/0048646 | A1 * | 3/2006 | Olson | B01D 53/10 95/134 |
| 2006/0057044 | A1 | 3/2006 | Chang et al. | |
| 2006/0112823 | A1 | 6/2006 | Avina | |
| 2006/0191835 | A1 | 8/2006 | Petrik et al. | |
| 2006/0204418 | A1 | 9/2006 | Chao et al. | |
| 2007/0167309 | A1 | 7/2007 | Olson | |
| 2007/0168213 | A1 | 7/2007 | Comrie | |
| 2007/0180990 | A1 * | 8/2007 | Downs | B01D 53/10 95/134 |
| 2007/0234902 | A1 | 10/2007 | Fair et al. | |
| 2007/0295347 | A1 | 12/2007 | Paine, III et al. | |
| 2008/0090951 | A1 | 4/2008 | Mao et al. | |
| 2008/0107579 | A1 | 5/2008 | Downs et al. | |
| 2008/0134888 | A1 | 6/2008 | Chao et al. | |
| 2008/0182747 | A1 | 7/2008 | Sinha | |
| 2008/0207443 | A1 | 8/2008 | Gadkaree et al. | |
| 2008/0292512 | A1 | 11/2008 | Kang | |
| 2009/0031708 | A1 | 2/2009 | Schmidt | |
| 2009/0062119 | A1 | 3/2009 | Olson et al. | |
| 2009/0081092 | A1 | 3/2009 | Yang et al. | |
| 2009/0136401 | A1 | 5/2009 | Yang et al. | |
| 2009/0235848 | A1 | 9/2009 | Eiteneer et al. | |
| 2009/0297413 | A1 * | 12/2009 | Olson | B01D 53/10 423/215.5 |
| 2009/0320678 | A1 * | 12/2009 | Chang | B01D 46/002 95/92 |
| 2010/0024642 | A1 | 2/2010 | Fukumoto et al. | |
| 2010/0047146 | A1 | 2/2010 | Olson et al. | |
| 2011/0076210 | A1 | 3/2011 | Pollack et al. | |
| 2011/0168018 | A1 | 7/2011 | Mohamadalizadeh et al. | |
| 2012/0183458 | A1 | 7/2012 | Olson et al. | |
| 2012/0244355 | A1 | 9/2012 | Pollack et al. | |
| 2013/0280156 | A1 | 10/2013 | Olson et al. | |
| 2014/0056787 | A1 | 2/2014 | Olson et al. | |
| 2014/0224121 | A1 | 8/2014 | Mimna et al. | |
| 2014/0255279 | A1 | 9/2014 | Olson et al. | |
| 2014/0308188 | A1 | 10/2014 | Olson et al. | |
| 2015/0098878 | A1 * | 4/2015 | Olson | B01J 20/12 423/210 |
| 2015/0246315 | A1 | 9/2015 | Olson et al. | |
| 2017/0100692 | A1 * | 4/2017 | Olson | B01D 53/08 |
| 2017/0128908 | A1 | 5/2017 | Olson et al. | |
| 2017/0173524 | A1 | 6/2017 | Olson et al. | |
| 2017/0173557 | A1 | 6/2017 | Olson et al. | |
| 2017/0239644 | A1 * | 8/2017 | Olson | B01D 53/02 |
| 2018/0133646 | A1 * | 5/2018 | Pavlish | B01J 20/3416 |
| 2018/0229182 | A1 | 8/2018 | Olson et al. | |
| 2018/0257030 | A1 | 9/2018 | Olson et al. | |
| 2018/0257031 | A1 * | 9/2018 | Olson | B01J 20/3416 |
| 2018/0280870 | A1 | 10/2018 | Olson et al. | |
| 2019/0009247 | A1 | 1/2019 | Olson et al. | |

FOREIGN PATENT DOCUMENTS

| | | | |
|---|---|---|---|
| CA | 2327602 | A1 | 6/2001 |
| CA | 2400898 | A1 | 8/2001 |
| CA | 2584327 | A1 | 4/2006 |
| CA | 2757309 | A1 | 10/2010 |
| CA | 2757309 | C | 1/2017 |
| CN | 1048173 | A | 1/1991 |
| CN | 101048218 | A | 10/2007 |
| CN | 101053820 | A | 10/2007 |
| CN | 101293196 | A | 10/2008 |
| CN | 101816922 | A | 9/2010 |
| CN | 102413899 | A | 4/2012 |
| CN | 104519410 | A | 4/2015 |
| CN | 105188910 | A | 12/2015 |
| CN | 104619410 | B | 5/2016 |
| CN | 107661744 | A | 2/2018 |
| DE | 3426059 | A1 | 1/1986 |
| DE | 3816600 | A1 | 11/1989 |
| DE | 10233173 | A1 | 2/2004 |
| DE | 202012003747 | U1 | 11/2012 |
| EP | 0208490 | A1 | 1/1987 |
| EP | 1386655 | A1 | 2/2004 |
| EP | 1458474 | | 9/2004 |
| EP | 1570894 | A1 | 9/2005 |
| FR | 2529802 | | 1/1984 |
| GB | 2122916 | A | 1/1984 |
| JP | 4953590 | A | 5/1974 |
| JP | 4953593 | A | 5/1974 |
| JP | 4966592 | A | 6/1974 |
| JP | 4943197 | B4 | 11/1974 |
| JP | 506438 | B4 | 3/1975 |
| JP | 51003386 | A | 1/1976 |
| JP | 544868 | A | 1/1979 |
| JP | 50145324 | A | 3/1980 |
| JP | 09256812 | | 9/1997 |
| KR | 1020027006149 | | 7/2002 |
| SU | 732207 | A1 | 5/1980 |
| SU | 1163982 | A | 6/1985 |
| WO | WO-0162368 | A1 | 8/2001 |
| WO | WO-0228513 | A2 | 4/2002 |
| WO | WO-03072241 | A1 | 9/2003 |
| WO | WO-2004089501 | A2 | 10/2004 |
| WO | WO-2004094024 | A2 | 11/2004 |
| WO | WO-2006039007 | A2 | 4/2006 |
| WO | WO-2006039007 | A3 | 4/2006 |
| WO | WO-2006099611 | A1 | 9/2006 |
| WO | WO-2009018539 | A3 | 2/2009 |
| WO | WO-2010123609 | A1 | 10/2010 |

(56) **References Cited**

FOREIGN PATENT DOCUMENTS

| | | | |
|---|---|---|---|
| WO | WO-2013162968 | A2 | 10/2013 |
| WO | WO-2013162968 | A3 | 10/2013 |
| WO | WO-2014137907 | A2 | 9/2014 |

OTHER PUBLICATIONS

"U.S. Appl. No. 10/554,018, Final Office Action dated Apr. 27, 2010", 8 pgs.
"U.S. Appl. No. 10/554,018, Non Final Office Action dated Oct. 6, 2009", 8 pgs.
"U.S. Appl. No. 10/554,018, Notice of Allowance dated Jan. 19, 2012", 7 pgs.
"U.S. Appl. No. 10/554,018, Response filed Feb. 8, 2010 to Non Final Office Action dated Oct. 6, 2009", 9 pgs.
"U.S. Appl. No. 10/554,018, Response filed Aug. 10, 2009 to Restriction Requirement dated Jun. 9, 2009", 1 pg.
"U.S. Appl. No. 10/554,018, Restriction Requirement dated Jun. 9, 2009", 5 pgs.
"U.S. Appl. No. 11/209,163, Advisory Action dated Apr. 21, 2008", 3 pgs.
"U.S. Appl. No. 11/209,163, Final Office Action dated Jan. 23, 2008", 20 pgs.
"U.S. Appl. No. 11/209,163, Non Final Office Action dated Aug. 13, 2007", 14 pgs.
"U.S. Appl. No. 11/209,163, Notice of Allowance dated Jul. 14, 2008", 7 pgs.
"U.S. Appl. No. 11/209,163, Preliminary Amendment filed Feb. 27, 2007", 9 pgs.
"U.S. Appl. No. 11/209,163, Response filed Mar. 24, 2008 to Final Office Action dated Jan. 23, 2008", 29 pgs.
"U.S. Appl. No. 11/209,163, Response filed Jul. 9, 2007 to Restriction Requirement dated Jun. 7, 2007", 2 pgs.
"U.S. Appl. No. 11/209,163, Response filed Nov. 13, 2007 to Non Final Office Action dated Aug. 13, 2007", 19 pgs.
"U.S. Appl. No. 11/209,163, Restriction Requirement dated Jun. 7, 2007", 6 pgs.
"U.S. Appl. No. 12/184,860, Examiner Interview Summary dated Apr. 5, 2011", 3 pgs.
"U.S. Appl. No. 12/184,860, Final Office Action dated May 11, 2011", 15 pgs.
"U.S. Appl. No. 12/184,860, Non Final Office Action dated Jan. 19, 2011", 14 pgs.
"U.S. Appl. No. 12/184,860, Response filed Apr. 7, 2011 to Non Final Office Action dated Jan. 19, 2011", 12 pgs.
"U.S. Appl. No. 12/184,860, Response filed Jul. 8, 2011 to Final Office Action dated May 11, 2011", 11 pgs.
"U.S. Appl. No. 12/201,595, Final Office Action dated Mar. 10, 2010", 13 pgs.
"U.S. Appl. No. 12/201,595, Non Final Office Action dated Apr. 16, 2009", 21 pgs.
"U.S. Appl. No. 12/201,595, Response filed Oct. 16, 2009 to Non Final Office Action dated Apr. 16, 2009", 18 pgs.
"U.S. Appl. No. 12/419,219, Final Office Action dated Oct. 14, 2010", 17 pgs.
"U.S. Appl. No. 12/419,219, Non Final Office Action dated Jan. 15, 2010", 13 pgs.
"U.S. Appl. No. 12/419,219, Non Final Office Action dated Feb. 23, 2011", 17 pgs.
"U.S. Appl. No. 12/419,219, Non Final Office Action dated Aug. 4, 2011", 16 pgs.
"U.S. Appl. No. 12/419,219, Notice of Allowance dated Jan. 10, 2012", 7 pgs.
"U.S. Appl. No. 12/419,219, Preliminary Amendment filed Apr. 6, 2009", 7 pgs.
"U.S. Appl. No. 12/419,219, Response filed Feb. 14, 2011 to Final Office Action dated Oct. 14, 2010", 19 pgs.
"U.S. Appl. No. 12/419,219, Response filed May 20, 2011 to Non Final Office Action dated Feb. 23, 2011", 14 pgs.
"U.S. Appl. No. 12/419,219, Response filed Jul. 15, 2010 to Non Final Office Action dated Jan. 15, 2010", 22 pgs.
"U.S. Appl. No. 12/419,219, Response filed Oct. 27, 2011 to Non Final Office Action dated Aug. 4, 2011", 12 pgs.
"U.S. Appl. No. 12/429,058, Advisory Action dated May 29, 2012", 3 pgs.
"U.S. Appl. No. 12/429,058, Ex Parte Quayle Action mailed Feb. 14, 2013", 7 pgs.
"U.S. Appl. No. 12/429,058, Examiner Interview Summary dated Dec. 28, 2012", 4 pgs.
"U.S. Appl. No. 12/429,058, Final Office Action dated Oct. 31, 2012", 21 pgs.
"U.S. Appl. No. 12/429,058, Final Office Action dated Dec. 20, 2011", 21 pgs.
"U.S. Appl. No. 12/429,058, Non Final Office Action dated Jun. 11, 2012", 18 pgs.
"U.S. Appl. No. 12/429,058, Non Final Office Action dated Jul. 19, 2011", 20 pgs.
"U.S. Appl. No. 12/429,058, Notice of Allowance dated Jan. 16, 2014", 5 pgs.
"U.S. Appl. No. 12/429,058, Notice of Allowance dated Sep. 11, 2013", 11 pgs.
"U.S. Appl. No. 12/429,058, Response filed Jan. 31, 2013 to Final Office Action dated Oct. 31, 2012", 19 pgs.
"U.S. Appl. No. 12/429,058, Response filed Mar. 7, 2013 to Ex Parte Quayle Action mailed Feb. 14, 2013", 7 pgs.
"U.S. Appl. No. 12/429,058, Response filed May 11, 2012 to Final Office Action dated Dec. 20, 2011", 11 pgs.
"U.S. Appl. No. 12/429,058, Response filed Sep. 11, 2012 to Non Final Office Action dated Jun. 11, 2012", 16 pgs.
"U.S. Appl. No. 12/429,058, Response filed Oct. 18, 2011 to Non Final Office Action dated Jul. 19, 2011", 17 pgs.
"U.S. Appl. No. 13/427,665, Non Final Office Action dated Jan. 4, 2013", 23 pgs.
"U.S. Appl. No. 13/427,665, Non Final Office Action dated Aug. 3, 2012", 12 pgs.
"U.S. Appl. No. 13/427,665, Notice of Allowance dated Apr. 16, 2013", 8 pgs.
"U.S. Appl. No. 13/427,665, Response filed Mar. 21, 2013 to Non Final Office Action dated Jan. 4, 2013", 20 pgs.
"U.S. Appl. No. 13/427,665, Response filed Oct. 10, 2012 to Non Final Office Action dated Aug. 3, 2012", 15 pgs.
"U.S. Appl. No. 13/427,685, Preliminary Amendment filed Mar. 22, 2012", 3 pgs.
"U.S. Appl. No. 13/453,274, Advisory Action dated Nov. 24, 2014", 3 pgs.
"U.S. Appl. No. 13/453,274, Final Office Action dated Oct. 16, 2014", 4 pgs.
"U.S. Appl. No. 13/453,274, Non Final Office Action dated May 30, 2014", 6 pgs.
"U.S. Appl. No. 13/453,274, Notice of Allowance dated Jan. 5, 2015", 5 pgs.
"U.S. Appl. No. 13/453,274, Response filed Sep. 2, 2014 to Non Final Office Action dated May 30, 2014", 13 pgs.
"U.S. Appl. No. 13/453,274, Response filed Nov. 6, 2014 to Final Office Action dated Oct. 16, 2014", 7 pgs.
"U.S. Appl. No. 13/453,274, Response filed Dec. 9, 2014 to Advisory Action dated Nov. 24, 2014", 6 pgs.
"U.S. Appl. No. 13/966,768, Non Final Office Action dated Dec. 6, 2013", 7 pgs.
"U.S. Appl. No. 13/966,768, Notice of Allowability dated Aug. 1, 2014", 6 pgs.
"U.S. Appl. No. 13/966,768, Notice of Allowance dated Apr. 18, 2014", 7 pgs.
"U.S. Appl. No. 13/966,768, Preliminary Amendment filed Aug. 14, 2013", 3 pgs.
"U.S. Appl. No. 13/966,768, Response filed Mar. 6, 2014 to Non Final Office Action dated Dec. 6, 2013", 6 pgs.
"U.S. Appl. No. 13/966,768, Supplemental Preliminary Amendment filed Aug. 15, 2013", 6 pgs.
"U.S. Appl. No. 14/102,896, Advisory Action dated Dec. 16, 2015", 3 pgs.

(56) **References Cited**

OTHER PUBLICATIONS

"U.S. Appl. No. 14/102,896, Final Office Action dated Aug. 26, 2015", 12 pgs.
"U.S. Appl. No. 14/102,896, Non Final Office Action dated Mar. 23, 2015", 13 pgs.
"U.S. Appl. No. 14/102,896, Notice of Allowance dated Jun. 10, 2016", 7 pgs.
"U.S. Appl. No. 14/102,896, Response filed Jan. 22, 2016 to Advisory Action dated Dec. 16, 2015", 11 pgs.
"U.S. Appl. No. 14/102,896, Response filed Jun. 22, 2015 to Non Final Office Action dated Mar. 23, 2015", 10 pgs.
"U.S. Appl. No. 14/102,896, Response filed Nov. 24, 2015 to Final Office Action dated Aug. 26, 2015", 5 pgs.
"U.S. Appl. No. 14/195,360, Corrected Notice of Allowance dated Feb. 27, 2017", 2 pgs.
"U.S. Appl. No. 14/195,360, Corrected Notice of Allowance dated Mar. 29, 2017", 2 pgs.
"U.S. Appl. No. 14/195,360, Final Office Action dated Mar. 18, 2016", 18 pgs.
"U.S. Appl. No. 14/195,360, Final Office Action dated Nov. 22, 2016", 7 pgs.
"U.S. Appl. No. 14/195,360, Non Final Office Action dated Jun. 20, 2016", 11 pgs.
"U.S. Appl. No. 14/195,360, Non Final Office Action dated Nov. 24, 2015", 19 pgs.
"U.S. Appl. No. 14/195,360, Notice of Allowance dated Feb. 7, 2017", 5 pgs.
"U.S. Appl. No. 14/195,360, Response filed Jan. 18, 2017 to Final Office Action dated Nov. 22, 2016", 7 pgs.
"U.S. Appl. No. 14/195,360, Response filed Feb. 22, 2016 to Non Final Office Action dated Nov. 24, 2015", 21 pgs.
"U.S. Appl. No. 14/195,360, Response filed May 17, 2016 to Final Office Action dated Mar. 18, 2016", 15 pgs.
"U.S. Appl. No. 14/318,270, Advisory Action dated Feb. 17, 2017", 4 pgs.
"U.S. Appl. No. 14/318,270, Corrected Notice of Allowance dated May 22, 2017", 2 pgs.
"U.S. Appl. No. 14/318,270, Final Office Action dated Nov. 25, 2016", 25 pgs.
"U.S. Appl. No. 14/318,270, Non Final Office Action dated Jun. 2, 2016", 24 pgs.
"U.S. Appl. No. 14/318,270, Notice of Allowance dated May 15, 2017", 8 pgs.
"U.S. Appl. No. 14/318,270, Response filed Jan. 25, 2017 to Final Office Action dated Nov. 25, 2016", 14 pgs.
"U.S. Appl. No. 14/318,270, Response filed Feb. 27, 2017 to Final Office Action dated Nov. 25, 2016", 15 pgs.
"U.S. Appl. No. 14/318,270, Response filed Mar. 2, 2016 to Restriction Requirement dated Jan. 14, 2016", 9 pgs.
"U.S. Appl. No. 14/318,270, Response filed Aug. 22, 2016 to Non Final Office Action dated Jun. 2, 2016", 14 pgs.
"U.S. Appl. No. 14/318,270, Restriction Requirement dated Jan. 14, 2016", 8 pgs.
"U.S. Appl. No. 14/564,860, Final Office Action dated Nov. 17, 2016", 4 pgs.
"U.S. Appl. No. 14/564,860, Non Final Office Action dated Jul. 12, 2016", 6 pgs.
"U.S. Appl. No. 14/564,860, Notice of Allowance dated Jan. 30, 2017", 6 pgs.
"U.S. Appl. No. 14/564,860, Preliminary Amendment filed Dec. 10, 2014", 8 pgs.
"U.S. Appl. No. 14/564,860, Preliminary Amendment filed Dec. 10, 2014", 6 pgs.
"U.S. Appl. No. 14/564,860, Response filed May 6, 2016 to Restriction Requirement dated Mar. 16, 2016", 9 pgs.
"U.S. Appl. No. 14/564,860, Response filed Oct. 3, 2016 to Non Final Office Action dated Jul. 12, 2016", 11 pgs.
"U.S. Appl. No. 14/564,860, Restriction Requirement dated Mar. 16, 2016", 5 pgs.
"U.S. Appl. No. 14/712,558, Advisory Action dated Feb. 12, 2018", 8 pgs.
"U.S. Appl. No. 14/712,558, Examiner Interview Summary dated Mar. 5, 2018", 3 pgs.
"U.S. Appl. No. 14/712,558, Final Office Action dated Dec. 6, 2017", 9 pgs.
"U.S. Appl. No. 14/712,558, Non Final Office Action dated Jul. 6, 2017", 7 pgs.
"U.S. Appl. No. 14/712,558, Response filed Jan. 23, 2018 to Final Office Action dated Dec. 6, 2017", 13 pgs.
"U.S. Appl. No. 14/712,558, Response filed Apr. 2, 2018 to Final Office Action dated Dec. 6, 2017", 7 pgs.
"U.S. Appl. No. 14/712,558, Response filed Oct. 6, 2017 to Non Final Office Action dated Jul. 6, 2017", 12 pgs.
"U.S. Appl. No. 14/712,558, Supplemental Amendment Filed May 15, 2018", 6 pgs.
"U.S. Appl. No. 14/712,558, Supplemental Preliminary Amendment filed May 15, 2015", 6 pgs.
"U.S. Appl. No. 15/295,594, Preliminary Amendment filed Jan. 26, 2017", 8 pgs.
"U.S. Appl. No. 15/295,594, Preliminary Amendment filed Jun. 13, 2017", 7 pgs.
"U.S. Appl. No. 15/382,114, Preliminary Amendment filed Apr. 4, 2017", 3 pgs.
"U.S. Appl. No. 15/449,112, Advisory Action dated Apr. 24, 2018", 3 pgs.
"U.S. Appl. No. 15/449,112, Final Office Action dated Feb. 15, 2018", 13 pgs.
"U.S. Appl. No. 15/449,112, Non Final Office Action dated Sep. 27, 2017", 17 pgs.
"U.S. Appl. No. 15/449,112, Response filed Jan. 16, 2018 to Non Final Office Action dated Sep. 27, 2017", 16 pgs.
"U.S. Appl. No. 15/449,112, Response filed Feb. 15, 2018 to Final Office Action dated Feb. 15, 2018", 13 pgs.
"U.S. Appl. No. 15/449,112, Response filed Apr. 6, 2018 to Final Office Action dated Feb. 15, 2018", 13 pgs.
"U.S. Appl. No. 15/452,527, Preliminary Amendment filed Mar. 8, 2017", 3 pgs.
"U.S. Appl. No. 15/589,359, Non Final Office Action dated Feb. 21, 2018", 15 pgs.
"U.S. Appl. No. 15/589,359, Preliminary Amendment filed Jan. 3, 2018", 6 pgs.
"Application Serial No. PCT/US04/12828, International Search Report dated Oct. 22, 2004", 2 pgs.
"Application Serial No. PCT/US2014/019916, International Preliminary Report on Patentability dated Sep. 17, 2015", 14 pgs.
"U.S. Appl. No. 14/195,360, Response filed Sep. 16, 2016 to Non Final Office Action dated Jun. 30, 2016", 12 pgs.
"Bromine and its Compounds", Jolles, Z. E., Editor, Academic Press, Inc., New York, NY, (1966), pp. 193 and 205.
"Canadian Application Serial No. 2,523,132, Office Action dated Jul. 18, 2011", 3 pgs.
"Canadian Application Serial No. 2,523,132, Response filed Jan. 16, 2012 to Office Action dated Jul. 18, 2011", 5 pgs.
"Canadian Application Serial No. 2,584,327, Office Action dated Mar. 3, 2009", 4 pgs.
"Canadian Application Serial No. 2,584,327, Office Action dated Dec. 7, 2009", 2 pgs.
"Canadian Application Serial No. 2,584,327, Response filed Mar. 19, 2010 to Office Action dated Dec. 7, 2009", 8 pgs.
"Canadian Application Serial No. 2,584,327, Response filed Sep. 2, 2009 to Office Action dated Mar. 3, 2009", 21 pgs.
"Canadian Application Serial No. 2,707,363, First Examiners Report", 2 pgs.
"Canadian Application Serial No. 2,757,309, Office Action dated Dec. 7, 2015", 3 pgs.
"Canadian Application Serial No. 2,757,309, Response filed Jun. 6, 2016 to Office Action dated Dec. 7, 2015", 13 pgs.
"Canadian Application Serial No. 2,757,309, Voluntary Amendment filed Jan. 30, 2015", 27 pgs.
"Canadian Application Serial No. 2,871,422, Response filed Feb. 26, 2016 to Office Action dated Sep. 9, 2015", 13 pgs.

(56) **References Cited**

OTHER PUBLICATIONS

"Canadian Application Serial No. 2,871,422, Office Action dated Apr. 2, 2015", 5 pgs.
"Canadian Application Serial No. 2,871,422, Office Action dated Apr. 24, 2018", 4 pgs.
"Canadian Application Serial No. 2,871,422, Office Action dated Aug. 31, 2017", 4 pgs.
"Canadian Application Serial No. 2,871,422, Office Action dated Sep. 9, 2015", 3 pgs.
"Canadian Application Serial No. 2,871,422, Office Action dated Dec. 22, 2016", 5 pgs.
"Canadian Application Serial No. 2,871,422, Response filed Feb. 26, 2018 to Office Action dated Aug. 31, 2017", w/ Amended Claims, 53 pgs.
"Canadian Application Serial No. 2,871,422, Response filed Jun. 21, 2017 to Office Action dated Dec. 22, 2016", 41 pgs.
"Canadian Application Serial No. 2,871,422, Response filed Aug. 28, 2015 to Canadian Office Action dated Apr. 2, 2015", 22 pgs.
"Chinese Application Serial No. 200480017704.4, Office Action dated Dec. 8, 2011", (w/ English Translation), 6 pgs.
"Chinese Application Serial No. 200480017704.4, Response filed Jan. 20, 2012 to Office Action dated Dec. 8, 2012", (w/ English Translation of Amended Claims), 10 pgs.
"Chinese Application Serial No. 200580037037.0, Chinese Office Action, dated Jun. 25, 2013 (and English translation)", no english translation, 46 pgs.
"Chinese Application Serial No. 201380033231.6, Office Action dated Sep. 21, 2015", w/ Partial English Translation, 6 pgs.
"Chinese Application Serial No. 201380033231.6, Response filed Jan. 14, 2016 to Office Action dated Sep. 21, 2015", w/English Claims, 7 pgs.
"Chinese Application Serial No. 201480025701.9, Office Action dated Jan. 16, 2018", (English Translation), 8 pgs.
"Chinese Application Serial No. 201480025701.9, Office Action dated Jul. 12, 2017", W/ English Translation, 8 pgs.
"Chinese Application Serial No. 201480025701.9, Office Action dated Jul. 25, 2016", (With English Translation), 4 pgs.
"Chinese Application Serial No. 201480025701.9, Office Action dated Dec. 23, 2016", W/ English Translation, 39 pgs.
"Chinese Application Serial No. 201480025701.9, Office Action dated Dec. 23, 2016", 24 pgs.
"Chinese Application Serial No. 201480025701.9, Response filed Mar. 27, 2018 to Office Action dated Jan. 16, 2018", w/ English Claims, 20 pgs.
"Chinese Application Serial No. 201480025701.9, Response filed Sep. 15, 2017 to Office Action dated Jul. 12, 2017", w/ English Translation, 21 pgs.
"DARCO® FGD—Powdered Activated Carbon", Norit Americas Inc. Datasheet No. 1100, (May 2009), 1 pg.
"Database WPI Week 197450", Thomson Scientific, London, GB; AN 1974-86199V XP002514926.
"European Application Serial No. 05814011.2, Response filed Sep. 9, 2011 to European Search Report dated Apr. 14, 2009 and Office Actioin dated Nov. 5, 2009", 20 pgs.
"European Application Serial No. 05814011.2, Communication Pursuant to Article 94(3) EPC dated Nov. 5, 2009", 4 pgs.
"European Application Serial No. 05814011.2, Decision to grant dated Jun. 8, 2012", 2 pgs.
"European Application Serial No. 05814011.2, Extended European Search Report dated Apr. 14, 2009", 13 pgs.
"European Application Serial No. 05814011.2, Office Action dated Jan. 25, 2008", 2 pgs.
"European Application Serial No. 05814011.2, Office Action dated Jan. 31, 2012", 4 pgs.
"European Application Serial No. 05814011.2, Office Action dated Apr. 27, 2012", 6 pgs.
"European Application Serial No. 05814011.2, Office Action dated Nov. 5, 2009", 2 pgs.
"European Application Serial No. 05814011.2, Partial European Search Report dated Apr. 14, 2009", 13 pgs.
"European Application Serial No. 05814011.2, Response filed Feb. 28, 2012 to Office Action dated Jan. 31, 2012", 30 pgs.
"European Application Serial No. 05814011.2, Response filed Apr. 18, 2008 to Office Action dated Jan. 25, 2008 and Third Party Observations submitted Dec. 4, 2007", 7 pgs.
"European Application Serial No. 05814011.2, Response filed May 11, 2010 to Communication Pursuant to Article 94(3) EPC dated Nov. 5, 2009", 11 pgs.
"European Application Serial No. 05814011.2, Response filed May 11, 2010 to Office Action dated Nov. 5, 2009", 11 pgs.
"European Application Serial No. 05814011.2, Response filed Sep. 9, 2011 to Extended European Search Report dated Apr. 14, 2009", 20 pgs.
"European Application Serial No. 05814011.2, Third Party Observations submitted Mar. 19, 2012", 7 pgs.
"European Application Serial No. 05814011.2, Third Party Observations submitted Dec. 4, 2007", 5 pgs.
"European Application Serial No. 10767465.7, Decision to grant dated Apr. 17, 2014", 2 pgs.
"European Application Serial No. 10767465.7, Extended European Search Report dated Dec. 6, 2012", 5 pgs.
"European Application Serial No. 10767465.7, Intention to Grant dated Mar. 17, 2014", 44 pgs.
"European Application Serial No. 10767465.7, Intention to Grant dated Sep. 30, 2013", 44 pgs.
"European Application Serial No. 10767465.7, Response filed Feb. 3, 2014 to Intention to Grant dated Sep. 30, 2013", 11 pgs.
"European Application Serial No. 10767465.7, Response filed Jun. 20, 2013 to Extended European Search Report dated Dec. 6, 2012", 18 pgs.
"European Application Serial No. 11189249.3, Communication Pursuant to Article 94(3) EPC dated Nov. 26, 2012", 4 pgs.
"European Application Serial No. 11189249.3, Decision to Refuse dated Dec. 19, 2013", 18 pgs.
"European Application Serial No. 11189249.3, Extended European Search Report dated Feb. 1, 2012", 7 pgs.
"European Application Serial No. 11189249.3, Office Action dated Nov. 4, 2013", 4 pgs.
"European Application Serial No. 11189249.3, Response filed Feb. 4, 2013 to Communication Pursuant to Article 94(3) EPC dated Nov. 26, 2012", 9 pgs.
"European Application Serial No. 11189249.3, Response filed Aug. 28, 2012 to Extended European Search Report dated Feb. 1, 2012", 9 pgs.
"European Application Serial No. 11189249.3, Summons to Attend Oral Proceedings mailed Apr. 15, 2013", 7 pgs.
"European Application Serial No. 11189252.7, Communication Pursuant to Article 94(3) EPC dated Jan. 9, 2013", 4 pgs.
"European Application Serial No. 11189252.7, Decision to grant dated May 2, 2014", 2 pgs.
"European Application Serial No. 11189252.7, Extended European Search Report dated Jan. 23, 2012", 6 pgs.
"European Application Serial No. 11189252.7, Extended European Search Report dated May 9, 2012", 12 pgs.
"European Application Serial No. 11189252.7, Office Action dated Oct. 30, 2013", 4 pgs.
"European Application Serial No. 11189252.7, Office Action dated Dec. 11, 2013", 6 pgs.
"European Application Serial No. 11189252.7, Response filed Feb. 11, 2013 to Communication Pursuant to Article 94(3) EPC dated Jan. 9, 2013", 5 pgs.
"European Application Serial No. 11189252.7, Response filed Oct. 10, 2013 to Office Action dated Apr. 15, 2013", 18 pgs.
"European Application Serial No. 11189252.7, Response filed Nov. 22, 2012 to Extended European Search Report dated May 9, 2012", 13 pgs.
"European Application Serial No. 11189252.7, Summons to Attend Oral Proceedings mailed Apr. 15, 2013", 6 pgs.
"European Application Serial No. 13719338.9, Notification Regarding Rule 164 and Article 94(3) EPC mailed Apr. 24, 2017", 8 pgs.
"European Application Serial No. 13719338.9, Office Action dated May 12, 2017", 6 pgs.

(56) **References Cited**

OTHER PUBLICATIONS

"European Application Serial No. 13719338.9, Office Action dated Dec. 19, 2014", 2 pgs.
"European Application Serial No. 13719338.9, Response filed Jun. 29, 2015 to Office Action dated Dec. 19, 2014", 19 pgs.
"European Application Serial No. 14711106.6, Communication Pursuant to Article 94(3) EPC dated Feb. 22, 2017", 6 pgs.
"European Application Serial No. 14711106.6, Response filed Aug. 17, 2017 to Communication Pursuant to Article 94(3) EPC dated Feb. 22, 2017", 10 pgs.
"International Application No. PCT/US2008/071986, International Search Report dated Jan. 30, 2009", 3 pgs.
"International Application Serial No. PCT/US2005/030018, International Preliminary Report on Patentability dated Dec. 27, 2006", 3 pgs.
"International Application Serial No. PCT/US2005/030018, International Search Report dated Jul. 25, 2006", 2 pgs.
"International Application Serial No. PCT/US2005/030018, Written Opinion dated Jul. 25, 2006", 3 pgs.
"International Application Serial No. PCT/US2010/022807, International Preliminary Report on Patentability dated Nov. 3, 2011", 6 pgs.
"International Application Serial No. PCT/US2010/022807, International Search Report dated Sep. 13, 2010", 3 pgs.
"International Application Serial No. PCT/US2010/022807, Written Opinion dated Sep. 13, 2010", 4 pgs.
"International Application Serial No. PCT/US2013/036964, International Preliminary Report on Patentability dated Jul. 17, 2014", 11 pgs.
"International Application Serial No. PCT/US2013/036964, International Search Report dated Nov. 29, 2013", 7 pgs.
"International Application Serial No. PCT/US2013/036964, Invitation to Pay Additional Fees and Partial Search Report dated Aug. 2, 2013", 7 pgs.
"International Application Serial No. PCT/US2013/036964, Written Opinion dated Apr. 15, 2014", 10 pgs.
"International Application Serial No. PCT/US2013/036964, Written Opinion dated Nov. 29, 2013", 13 pgs.
"International Application Serial No. PCT/US2014/019916, International Search Report dated Oct. 13, 2014", 6 pgs.
"International Application Serial No. PCT/US2014/019916, Invitation to Pay Additional Fees and Partial Search Report dated May 30, 2014", 6 pgs.
"International Application Serial No. PCT/US2014/019916, Written Opinion dated Oct. 13, 2014", 13 pgs.
"Powdered Activated Carbon", Cabot Corp, [Online] retrieved from the internet: <http://www.cabotcorp.com/solutions/products-plus/activated-carbon/powdered>, (Jan. 3, 2015), 3 pgs.
"Response filed Sep. 4, 2017 to Notification Regarding Rule 164 and Article 94(3) EPC dated Apr. 24, 2017", 7 pgs.
Arenillas, A, et al., "CO2 removal potential of carbons prepared by co-pyrolysis of sugar and nitrogen containing compounds", Journal of analytical and applied pyrolysis 74.1, (2005), 298-306.
Bakandritsos, A., et al., "Aqueous and Gaseous Adsorption from Montmorillonite-Carbon Composites and from Derived Carbons", Langmuir, 21, (2005), 2349-2355.
Bakandritsos, A., et al., "High Surface Area Montmorillonite—Carbon Composites and Derived Carbons", Chemistry of Materials, vol. 16, No. 8, (Mar. 16, 2004), 1551-1559.
Bimer, Jan, et al., "Modified active carbons from precursors enriched with nitrogen functions: sulfur removal capabilities", (1998), 519-525.
Chang, Shih-Ger, "Method for Oxidation of Mercury Vapor", U.S. Appl. No. 60/560,904, filed Apr. 9, 2004, (Apr. 9, 2004), 9 pgs.
Criswell, Gordon, et al., "Progress Report on Mercury Control Retrofit at the Colstrip Power Station", Paper #91, Mega Symposium, Baltimore, MD, (Aug. 2011), 1-23.
Darder, M., et al., "Caramel-clay nanocomposites", Journal of Materials Chemistry, 15, (2005), 3913-3918.
Diamantopoulou, LR G Skodras, et al., "Sorption of mercury by activated carbon in the presence of flue gas components", Fuel Processing Technology 91.2, (2010), 158-163.
Dong, J., et al., "Mercury Removal from Flue Gases by Novel Regenerable Magnetic Nanocomposite Sorbents", Environ. Sci. Technol., 43, (2009), 3266-3271.
Dunham, G. E., et al., "Mercury Capture by an Activated Carbon in a Fixed-Bed Bench-Scale System", Environmental Progress, 17(3), (1998), 203-208.
Eisazadeh, H,, "Removal of Mercury from Water Using Polypyrrole and its Composites", Chinese Journal of Polymer Science, 25(4), (2007), 393-397.
Felsvang, K., et al., "Mercury Reduction and Control Options", The U.S. EPA-DOE-EPRI Combined Power Plant Air Pollutant Control Symposium; The Mega Symposium and The A&WMA Specialty Conference and Mercury Emissions: Fate, Effects and Control; Chicago, IL, (Aug. 2001), 1-19.
Fernandez-Saavedra, R., et al., "Polymer-Clay Nanocomposites as Precursors of Nanostructured Carbon Materials for Electrochemical Devices: Templating Effect of Clays", Journal of Nanoscience and Nanotechnology, 8, (2008), 1741-1750.
Ghorbani, M., et al., "Application of polyaniline nanocomposite coated on rice husk ash for removal of Hg(II) from aqueous media", Synthetic Metals, (2001), 4 pgs.
Ghorishi, Behrooz, et al., "Sorption of Mercury Species by Activated Carbons and Calcium-Based Sorbents: Effect of Temperature, Mercury Concentration and Acid Gases", Waste Manage. Res., 16:6, (1998), 582-593.
Gomez-Aviles, A., et al., "Functionalized Carbon-Silicates from Caramel-Sepiolite Nanocomposites", Angew. Chem. Int. Ed., 46, (2007), 923-925.
Gomez-Aviles, A., et al., "Multifunctional materials based on graphene-like/sepiolite nanocomposites", Applied Clay Science, 47, (2010), 203-211.
Ha, et al., "Effect of unburnt carbon on the corrosion performance of fly ash cement mortar", Construction and Building Materials, (Sep. 1, 2005), 7 pgs.
Ikeue, K., et al., "Noble-metal-containing nanoporous carbon synthesized within the interlayer space of montmorillonite and its catalytic property", Applied Catalysis A: General, 351, (2008), 68-74.
Kawabuchi, Yuji, et al., "Chemical vapor deposition of heterocyclic compounds over active carbon fiber to control its porosity and surface function", Langmuir 13.8, (1997), 2314-2317.
Kyotani, T., et al., "Formation of highly orientated graphite from polyacrylonitrile by using a two-dimensional space between montmorillonite lamellae", Nature, 331, (1988), 331-333.
Lancia, A., et al., "Adsorption of Mercuric Chloride Vapours from Incinerator Flue Gases on Calcium Hydroxide Particles", Combust. Sci. & Tech., 93, (1993), 277-289.
Laumb, Jason D., et al., "X-ray photoelectron spectroscopy analysis of mercury sorbent surface chemistry", Fuel Processing Technology, 85, (2004), 577-585.
Li, Y., et al., "Removal of elemental mercury from simulated coal-combustion flue gas using a SiO2—TiO2 nanocomposite", Fuel Processing Technology, 89, (2008), 567-573.
M, Hocquel, "Quecksilber und seine Verbindungen bei der Abfallverbrennung", with English Abstract p. 3, (Dec. 31, 2000), 112 pgs.
Maroto-Valer, M. Mercedes, et al., "Development of Activated Carbons From Coal and Biomass Combustion and Gasification Chars", (2004), 2 pgs.
Mochida, I., et al., "Preparation of nitrogen containing pitches from quinoline and isoquinoline by AID of AlCl3", Carbon, 33(8), (1995), 1069-1077.
Nguyen-Thanh, D., et al., "High Porosity Carbonaceous Adsorbents Templated From Porous Clay Heterostructures", Prepr. Pap.-Am. Chem. Soc., Div. Fuel Chem., 51(1), (2006), 7-8.
Nguyen-Thanh, D., et al., "Metal-loaded carbonaceous adsorbents templated from porous clay heterostructures", Microporous and Mesoporous Materials, 92, (2006), 47-55.

(56) **References Cited**

OTHER PUBLICATIONS

Nickels, Dale L, et al., "Processing and reuse of activated carbon used to adsorb mercury from power plant flue gases", Final report, (2004).
Olson, David, et al., "The reduction of gas phase air toxics from combustion and incineration sources using the MET-Mitsui-BF activated coke process", Fule Processing Technology, (2000), 13 pgs.
Olson, David G., et al., "The Reduction of Gas Phase Air Toxics from Combustion and Incineration Sources using the MET-Mitsui-BF Activated Coke Process", Fuel Processing Technology, 65-66, (2000), 393-405.
Olson, E. S., et al., "Catalytic effects of carbon sorbents for mercury capture", Journal of Hazardous Materials, 74, (2000), 61-79.
Olson, Edwin S., et al., "Surface Compositions of Carbon Sorbents Exposed to Simulated Low-Rank Coal Flue Gases", J. Air & Water Waste Manage. Assoc., 55, (2005), 747-754.
Padak, Bihter, "Understanding mercury binding on activated carbon", Carbon 47.1 2, (2009), 2855-2864.
Przepiorski, J, et al., "High temperature ammonia treatment of activated carbon for enhancement of CO2 adsorption", Applied Surface Science 225.1, (2004), 235-242.
Rachel, Ribeirovieira Azzi Rios, et al., "Tailoring Activated Carbon by Surface Chemical Modification with O, S, and N Containing Molecules", Materials Research. 6 (2), (2003), 129-135.
Raymundo-Pinero, E, et al., "Structural characterization of N-containing activated carbon fibers prepared from a low softening point petroleum pitch and a melamine resin", Carbon 40.4, (2002), 597-608.
Smokey, et al., "Alternative to Activated Carbon for Mercury Control", Power Engineering, (Oct. 2012), 10 pgs.
Streng, Sabine, et al., "Toxics control by activated charcoal within the "System Dusseldorf" full scale experience", B. Fuel Processing Technology, (1994), 14 pgs.
Tsuji, K, et al., "The Activated Coke Process for Combinded SOx/NOx/Air Toxics Reduction", Air and Water Management Assoc., (Mar. 10, 1993), 27 pgs.
Vosteen, B, et al., "Chlor-und Bromgestutzte Hg-Sorption an Elektrofilter-Flugaschen eines kohlegefeuerten Schmelzkammerkessels und an Zementrohmehl", Matin-Luther-Universitat Halle-Wittenberg, (2003), 1-30.
Vosteen, B. W., et al., "", Flyer on Mercury Abatement given at the VDI—Wissensforum, Dusseldorf,Germany, (2003), 6 pgs.
Vosteen, B. W., "Bromine-enhanced Mercury Abatement from Combustion Flue Gases—Recent Industrial Applications and Laboratory Research", VGB PowerTech, vol. 86, Issue Mar. 2006, (2006), 70-75.
Vosteen, N., "Emissionsminderung von Quecksilber durch chlor— und bromgestutzte Hg-Oxidation in Rauchgas", (Sep. 2003), 1-23.
Wan, Q., et al., "Removal of gaseous elemental mercury over a CeO2—WO3/TiO2 nanocomposite in simulated coal-fired flue gas", Chemical Engineering Journal, 170, (2011), 512-517.
Wang, B., et al., "Performance of a diatomite-based sorbent in removing mercury from aqueous and oil matrices", J. Environ. Eng. Sci., 6, (2007), 469-476.
Zhang, Y., et al., "High efficient removal of mercury from aqueous solution by polyaniline/humic acid nanocomposite", Journal of Hazardous Materials, 175, (2010), 404-409.
Zhao, Yongxin, et al., "Effectsof Sulfur Dioxide and Nitric Oxide on Mercury Oxidation and Reducton under Homogeneous Conditions", J. Air & Waste Manage. Assoc., 56, (2006), 628-635.
Zheng, Yuanjing, et al., "Review of technologies for mercury removal from flue gas from cement production processes", Progress in Energy and Combustion Science, vol. 38, No. 5, (Apr. 26, 2012), 599-629.
Zhu, Jianzhong, et al., "Enhanced mercury ion adsorption by amine-modified activated carbon", Journal of hazardous materials 166, (2009), 866-872.
"U.S. Appl. No. 14/712,558, Non Final Office Action dated Jul. 2, 2018", 16 pgs.
"U.S. Appl. No. 14/712,558, Supplemental Amendment filed Jun. 13, 2018", 14 pgs.
"U.S. Appl. No. 15/974,343 Preliminary Amendment Filed May 15, 2018", 7 pgs.
"U.S. Appl. No. 15/295,594, Response filed Jul. 3, 2018 to Restriction Requirement dated May 22, 2018", 9 pgs.
"U.S. Appl. No. 15/295,594, Restriction Requirement dated May 22, 2018", 6 pgs.
"U.S. Appl. No. 15/295,594, Restriction Requirement dated Jun. 29, 2018", 5 pgs.
"U.S. Appl. No. 15/295,594, Supplemental Amendment Filed May 15, 2018", 10 pgs.
"U.S. Appl. No. 15/589,359, Final Office Action dated Jun. 4, 2018", 13 pgs.
"U.S. Appl. No. 15/589,359, Response filed May 18, 2018 to Non Final Office Action dated Feb. 21, 2018", 14 pgs.
"Supplementary European Search Report, dated Dec. 6, 2012", 2 pgs.
"U.S. Appl. No. 15/295,594, Response filed Jul. 24, 2018 to Restriction Requirement dated Jun. 29, 2018", 9 pgs.
"U.S. Appl. No. 15/449,112, Notice of Allowance dated Jul. 12, 2018", 8 pgs.
"U.S. Appl. No. 15/589,359, Response filed Jul. 26, 2018 to Non Final Office Action dated Jun. 4, 2018", 14 pgs.
"U.S. Appl. No. 15/974,343, Non Final Office Action dated Jul. 27, 2018", 12 pgs.
"U.S. Appl. No. 15/997,091, Non Final Office Action dated Jul. 27, 2018", 13 pgs.
"U.S. Appl. No. 15/997,091, Response filed Aug. 14, 2018 to Non Final Office Action dated Jul. 27, 2018", 10 pgs.
"European Application Serial No. 14711106.6, Office Action dated Jun. 5, 2018", 16 pgs.
"U.S. Appl. No. 15/974,343, Response filed Aug. 14, 2018 to Non Final Office Action dated Jul. 27, 2018", 11 pgs.
"U.S. Appl. No. 14/712,558, Response filed Aug. 14, 2018 to Non Final Office Action dated Jul. 2, 2018", 11 pgs.
"U.S. Appl. No. 15/382,114, Restriction Requirement dated Aug. 28, 2018", 9 pgs.
"U.S. Appl. No. 15/589,359, Final Office Action dated Sep. 12, 2018", 14 pgs.
"U.S. Appl. No. 15/382,114, Response filed Sep. 12, 2018 to Restriction Requirement dated Aug. 28, 2018", 8 pgs.
"U.S. Appl. No. 15/589,359, Response filed Sep. 14, 2018 to Final Office Action dated Sep. 12, 2018", 18 pgs.
"U.S. Appl. No. 14/712,558, Non Final Office Action dated Oct. 19, 2018", 26 pgs.
"U.S. Appl. No. 14/712,558, Non-Final Office Action dated Oct. 19, 2018", 35 pgs.
"U.S. Appl. No. 15/295,594, Non Final Office Action dated Oct. 23, 2018", 20 pgs.
"U.S. Appl. No. 15/589,359, Non Final Office Action dated Oct. 22, 2018", 12 pgs.
"U.S. Appl. No. 15/974,343, Non Final Office Action dated Oct. 29, 2018", 22 pgs.
"U.S. Appl. No. 15/997,091, Non Final Office Action dated Nov. 2, 2018", 27 pgs.
"European Application Serial No. 14711106.6, Response filed Oct. 15, 2018 to Office Action dated Jun. 5, 2018", w/ English Claims, 15 pgs.
Pietrzak, et al., "Preparation of nitrogen-enriched activated carbons from brown coal", Energy and Fuels 20.3, (2006), 1275-1280.
"U.S. Appl. No. 14/712,558, Amendment and Response filed Dec. 3, 2018 to Non Final Office Action dated Oct. 19, 2018", 28 pgs.
"U.S. Appl. No. 14/712,558, Final Office Action dated Jan. 11, 2019", 27 pgs.
"U.S. Appl. No. 15/382,114, Non Final Office Action dated Dec. 12, 2018", 46 pgs.
"U.S. Appl. No. 15/589,359, Amendment and Response filed Jan. 17, 2019 to Non Final Office Action dated Oct. 22, 2018", 14 pgs.
"U.S. Appl. No. 15/974,343, Amendment and Response filed Dec. 3, 2018 to Non Final Office Action dated Oct. 29, 2018", 37 pgs.
"U.S. Appl. No. 15/974,343, Final Office Action dated Jan. 14, 2019", 25 pgs.

(56) **References Cited**

OTHER PUBLICATIONS

"U.S. Appl. No. 15/997,091, Final Office Action dated Jan. 11, 2019", 20 pgs.
"U.S. Appl. No. 15/997,091, Response filed Dec. 3, 2018 Non Final Office Action dated Nov. 2, 2018", 40 pgs.
"Canadian Application Serial No. 2,904,039, Office Action dated Feb. 18, 2019", 6 pgs.
"U.S. Appl. No. 15/382,114, Response filed Mar. 12, 2019 to Non Final Office Action dated Dec. 12, 2018", 24 pgs.
"U.S. Appl. No. 15/589,359, Final Office Action dated Mar. 1, 2019", 10 pgs.
et al., "Coal Combustion Products (CCPs): Characteristics, Utilization and Beneficiation", Edited by Tom Robl, et al., Woodhead Publishing (Elsevier), (2017), 565 pgs.
"Control of Mercury Emissions from Coal Fired Electric Utility Boilers: An Update", US EPA Air Pollution Prevention and Control Division, National Risk Management Research Laboratory, Office of Research and Development, (Feb. 18, 2005), 59 pgs.
"Sorbent Enhancement Additives for Mercury Control", US DOE Office of Fossil Energy, National Energy Technology Laboratory, (Jun. 2008), 4 pgs.
Benson, Steven A., et al., "JV Task 73—Mercury Control Technologies for Electric Utilities Burning Subbituminous Coals—Draft Final Report", University of North Dakota Energy and Environmental Research Center, (Jun. 2005), 165 pgs.
Benson, Steven A., et al., "Pilot-and Full-Scale Demonstration of Advanced Mercury Control Technologies for Lignite-Fired Power Plants", University of North Dakota Energy and Environmental Research Center, (Feb. 2005), 97 pgs.
Berry, Mark, et al., "Mercury control evaluation of calcium bromide injection into a PRB-fired furnace with an SCR", Proc. of the Air Quality VI Conference, Arlington, VA, (2007), 9 pgs.
Brown, Thomas D., et al., "Mercury Measurement and Its Control: What We Know, Have Learned, and Need to Further Investigate", Journal of the Air and Waste Management Association, 49(6), (Jun. 1999), 98 pgs.
Feeley, Thomas J., et al., "A Review of DOE/NETL's Mercury Control Technology R and D Program for Coal-Fired Power Plants", DOE/NETL Hg R and D Program Review, (Apr. 2003), 32 pgs.
French, Charles L., et al., "Study of Hazardous Air Pollutant Emissions from Electric Utility Steam Generating Units—Final Report to Congress: vol. 1", US EPA Office of Air Quality Planning and Standards, (Feb. 1998), 502 pgs.
Ghorishi, Behrooz S., et al., "In-Flight Capture of Elemental Mercury by Chlorine-Impregnated Activated Carbon", Proc. of the 94th Annual Meeting of the Air and Waste Management Association, Orlando, FL, (Jun. 2001), 14 pgs.
Jones, Andrew P., et al., "DOE/NETL's Phase II Mercury Control Technology Field Testing Program: Preliminary Economic Analysis of Activated Carbon Injection", Environmental Science and Technology, 41(4), (2007), 7 pgs.
Keating, Martha H., et al., "Mercury Study Report to Congress vol. 1: Executive Summary", US EPA Office of Air Quality Planning and Standards, (Dec. 1997), 95 pgs.
Kilgroe, James D., et al., "Control of Mercury Emissions from Coal-Fired Electric Utility Boilers: Interim Report", US EPA Office of Research and Development, National Risk Management Laboratory, Air Pollution Prevention and Control Division, (Dec. 2001), 485 pgs.
Nelson, Sid Jr., et al., "How China Can Leapfrog the World in Mercury Emission Reductions", Proc. of the AWMA Intl. Specialty Conference on Leapfrogging Opportunities for Air Quality Improvement, (2010), 24 pgs.
Pavlish, John H., et al., "Status review of mercury control options for coal-fired power plants", Fuel Processing Technology, vol. 82, (2003), 77 pgs.
Yang, Yang, et al., "Effect of HBr formation on mercury oxidation via CaBr(2) addition to coal during combustion", RSC Advances, 6(64), 2016, 7 pgs.

* cited by examiner

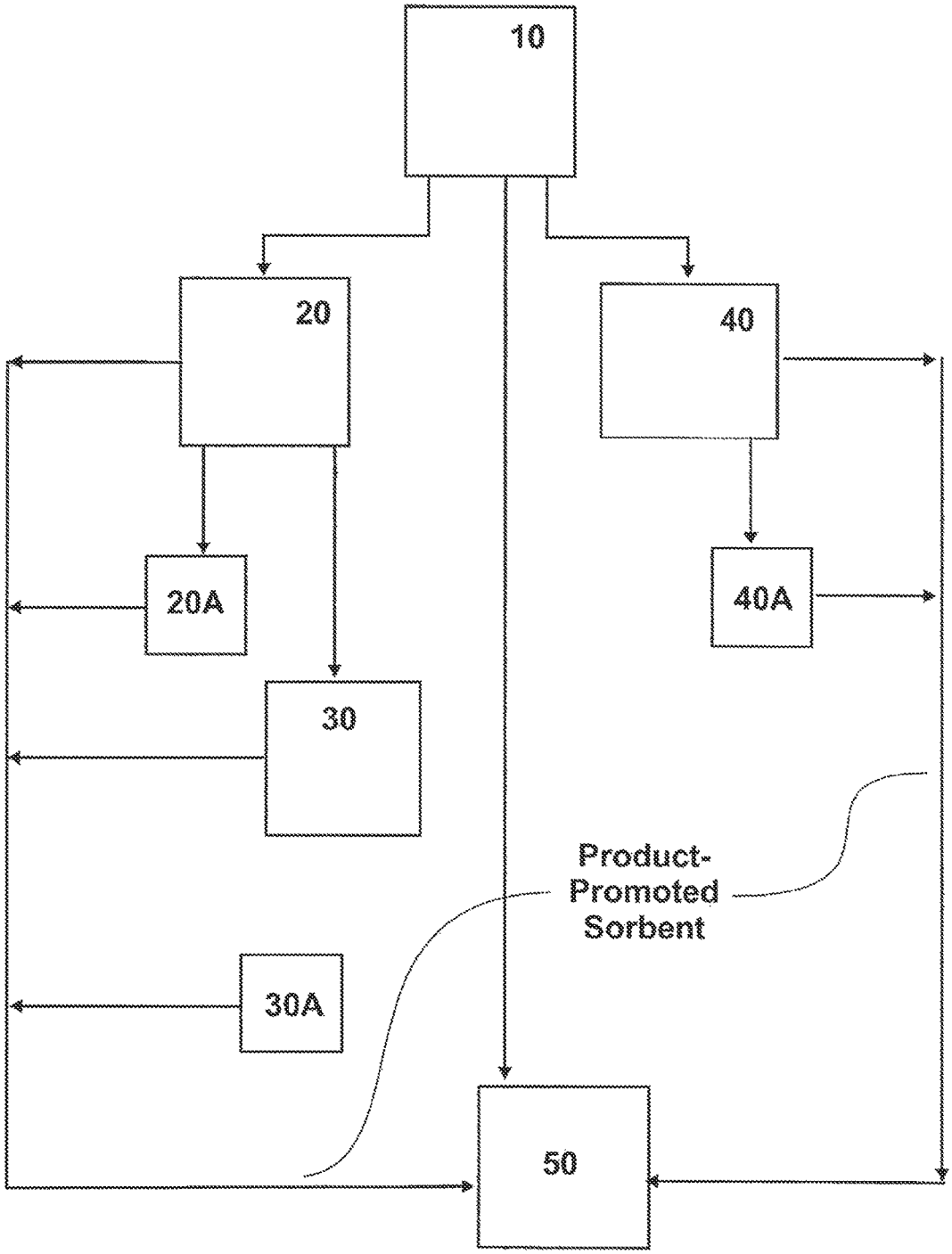


FIG. 1

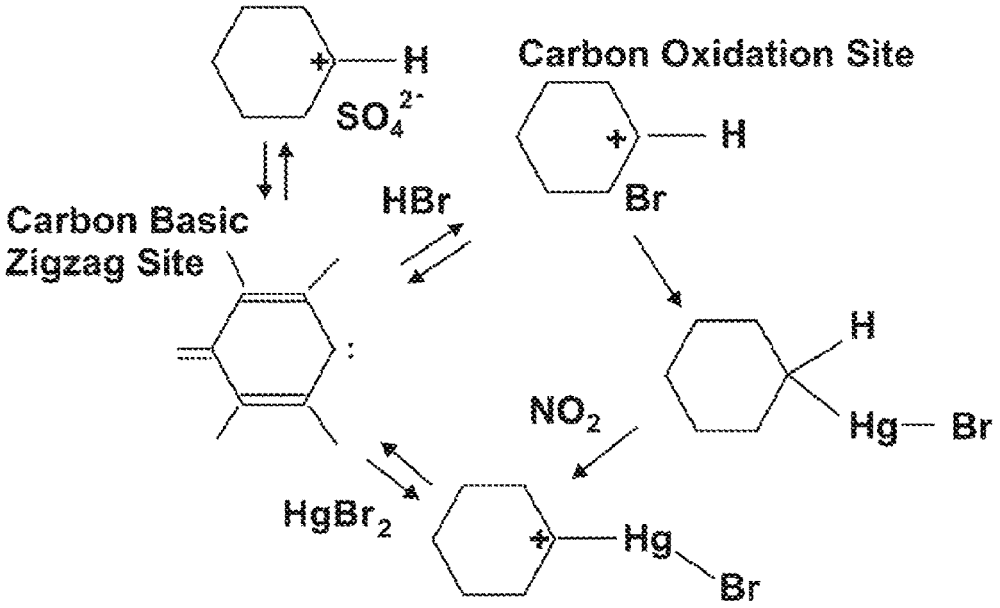
Carbon Oxidation Site
H
$SO_4^{2-}$
H
Br
HBr
Carbon Basic
Zigzag Site
H
$NO_2$
Hg
Br
$HgBr_2$
Hg
Br

FIG. 2

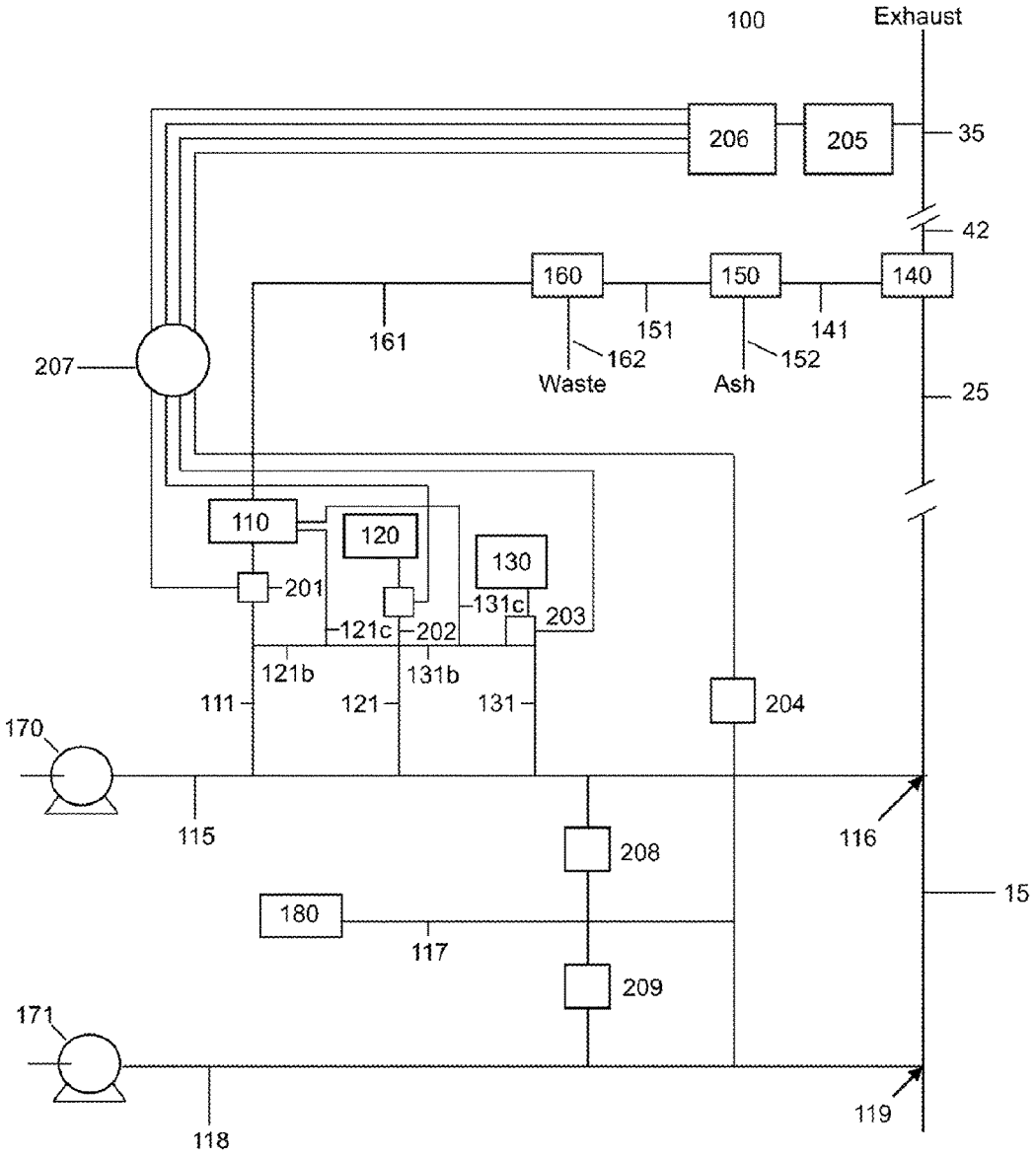
100
Exhaust
206
205
35
42
160
150
140
161
151
141
162
152
Waste
Ash
207
25
110
120
130
201
131c
203
121c
202
121b
131b
111
121
131
204
170
115
116
208
15
180
117
209
171
118
119

FIG. 3

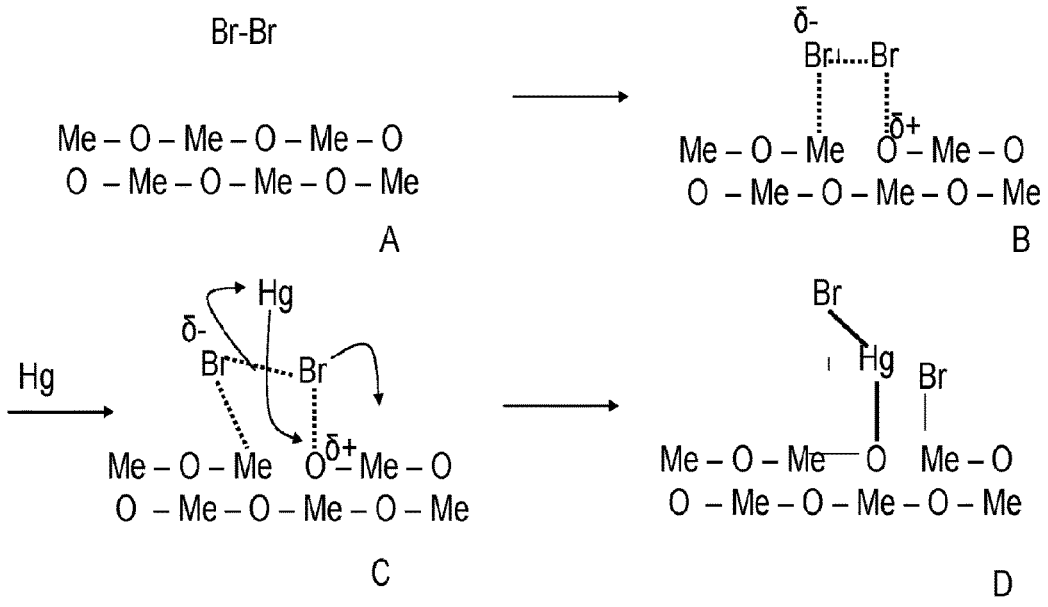
Br-Br
Me – O – Me – O – Me – O
O – Me – O – Me – O – Me
A
δ-
Br
Br
δ+
Me – O – Me O – Me – O
O – Me – O – Me – O – Me
B
Hg
Hg
δ-
Br
Br
δ+
Me – O – Me O – Me – O
O – Me – O – Me – O – Me
C
Br
Hg
Br
Me – O – Me O Me – O
O – Me – O – Me – O – Me
D

FIG. 4

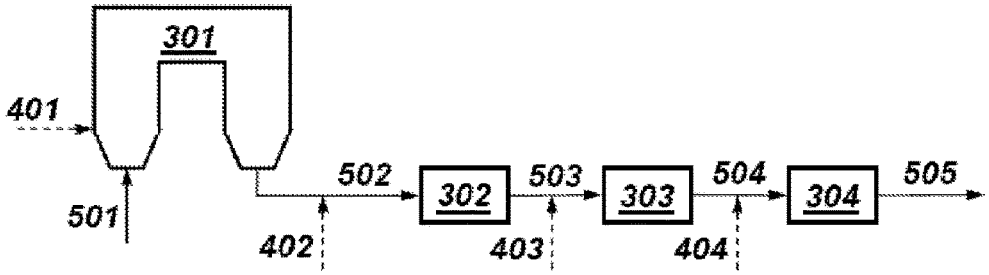
301
401
501
502
402
302
503
403
303
504
404
304
505

FIG. 5A

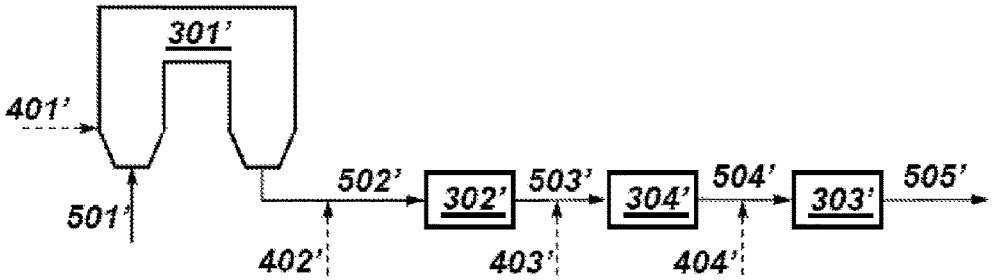
301'
401'
501'
502'
402'
302'
503'
403'
304'
504'
404'
303'
505'

FIG. 5B

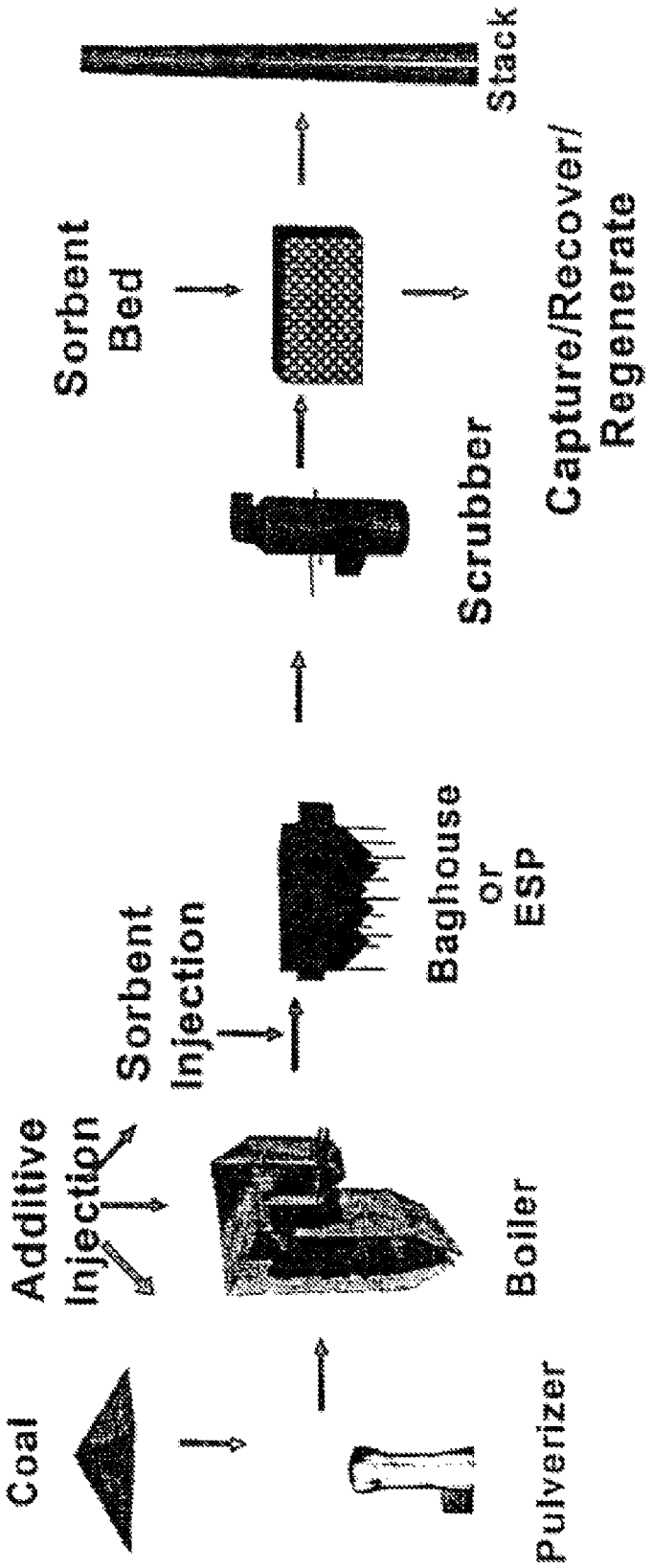
Coal
Additive Injection
Pulverizer
Boiler
Sorbent Injection
Baghouse or ESP
Scrubber
Sorbent Bed
Capture/Recover/ Regenerate
Stack

FIG. 6

# SORBENTS FOR THE OXIDATION AND REMOVAL OF MERCURY

## CROSS-REFERENCE TO RELATED APPLICATIONS

This application is a continuation-in-part of U.S. patent application Ser. No. 15/295,594, filed Oct. 17, 2016, which is a continuation of U.S. patent application Ser. No. 14/102,896 filed on Dec. 11, 2013 (now U.S. Pat. No. 9,468,886), which is a continuation of U.S. patent application Ser. No. 12/429,058 filed on Apr. 23, 2009 (now U.S. Pat. No. 8,652,235), which is a continuation-in-part of U.S. patent application Ser. No. 12/201,595 filed on Aug. 29, 2008 (abandoned), which is a divisional of U.S. patent application Ser. No. 11/209,163 filed on Aug. 22, 2005 (now U.S. Pat. No. 7,435,286), which claims priority from provisional application Ser. No. 60/605,640 filed on Aug. 30, 2004. The disclosures of U.S. patent application Ser. Nos. 14/102,896; 12/429,058; 12/201,595; 11/209,163; and 60/605,640 are hereby incorporated herein by reference to the extent appropriate.

## BACKGROUND OF THE INVENTION

Technical Field of the Invention

The present invention relates to methods and materials for the removal of pollutants from flue gas or product gas from a gasification system. In particular, mercury is removed from gas streams generated during the burning or gasification of fossil fuels by highly reactive regenerable sorbents.

Background of the Invention

The combustion and gasification of fossil fuel such as coal generates flue gas that contains mercury and other trace elements that originate from the fuel. The release of the mercury (and other pollutants) to the environment must be controlled by use of sorbents, scrubbers, filters, precipitators, and other removal technologies. Mercury is initially present in the elemental form during combustion and gasification. In downstream process sections, such as in the ducts and stack of a combustion system, some of the elemental mercury is oxidized. The amount that is oxidized depends on the amount of acid gases present in the flue gas and other factors. Amounts of mercury vary with the fuel, but concentrations of mercury in the stream of flue gas from coal combustion are typically less than 5 parts per billion (ppb). Large coal combustion facilities such as electric utilities may emit a pound of mercury, or more, a day. Mercury removal applications include, without limitation, flue gas from coal (or other fossil fuel) combustion, waste incineration, product gas from gasification, as well as off-gases from mineral processing, metal refining, retorting, cement manufacturing, chloralkali plants, dental facilities, and crematories.

Mercury Sorbent Technologies

Several types of mercury control methods for flue gas have been investigated, including injection of fine sorbent particles into a flue gas duct and passing the flue gas through a sorbent bed. Fine-particle injection sorbents include activated carbon, metal oxide sorbent, sodium sulfide particles, and basic silicate or oxide sorbents. When particle injection is employed, the mercury captured on the sorbent particles is removed from the gas stream in a particulate control device such as a baghouse or electrostatic precipitator (ESP) and collected along with ash particulate. The sulfide and basic silicate and oxide particles are effective only for the oxidized mercury, and the metal oxide sorbents exhibit



slower capture kinetics than the carbon particles. Additionally, injection of fine carbon particles into the flue gas stream has been only partially successful in removing mercury, especially elemental mercury, where effective removal of only about 60% is attained for some applications with a FF (fabric filter) to collect carbon and ash. Even lower removal rates have been observed when an ESP is used to collect the carbon because the contact time of the carbon with the gas is very short.

A major problem with existing carbon injection systems is that the sorbent is relatively unreactive toward mercury. Consequently, these sorbents must be used in large amounts, at high sorbent-to-mercury ratios, to effectively capture the mercury. These sorbents tend to be relatively expensive and cannot be easily separated from the ash for regeneration and reuse. The collection of carbon in the ash also creates solid waste disposal problems, and the spent sorbent may contaminate the collected ash, preventing its use in various applications.

One solution has been to add an oxidative sorbent comprising an aluminosilicate material impregnated with a very heavy dosage of one or more oxidative metal halides plus activated carbon. For example, refer to Varma et al. (20070140940). However, the amounts of metal salts required for Hg oxidation are generally relatively large and expensive. Also, several of the salts that can be used in such a process are highly toxic. Although the metal salts are present for oxidation in this process, activated carbon is essential for getting adsorption of the Hg. As such, there is no synergistic role for the aluminosilicates as they appear to be only a support for the oxidizing salts.

Another approach has been the injection of aluminosilicate particulate such as bentonite, which contains neither oxidizing salts nor halogen complexes with a Lewis base site, and thus lacks the more powerful oxidizing capability of the said complexes as described in this application. For example, see U.S. Pat. No. 7,413,719. Additionally, the injection of an aluminosilicate (kaolin or metakaolin) containing calcium hypochlorite which thermally decomposes to form halogen is also known. For example, see U.S. Patent Application No. 20030103882. Thus these and similar impregnated aluminosilicate technologies require time in flight at appropriate high temperatures to heat the impregnated salt(s) to generate an oxidation site. This clearly represents a kinetic barrier to activation in contrast to the extremely fast complexing reaction of the Lewis acid on the surface of the appropriate Lewis base sorbent described in the present patent. The kinetic barrier is only for heating up the calcium hypochlorite to decompose it to Cl atoms or molecules. Halogen (bimolecular or atomic) would complex with carbon or noncarbon at any lower temperature to form reactive oxidation sites. Also, halide would require a very high temp or strong acid to form reactive halogen or halogen complex.

Yet another approach is the injection of bentonite plus a metal sulfide and a metal salt, none of which is oxidizing to elemental mercury and would require a slow thermal activation step. For example, see U.S. Patent Application No. 20070119300.

The injection of halogen or halogen precursors in a hot zone, followed by contact with an alkaline material in a wet or dry scrubber is another approach known in the art. With such an approach, elemental mercury is claimed to be oxidized by the halogen to Hg(II) which is collected by the alkaline material in the scrubber. For example, see U.S. Pat. No. 6,808,692 (Oehr), U.S. Pat. No. 3,849,267 (Hilgen), U.S. Pat. No. 5,435,980 (Felsvang), U.S. Pat. No. 6,375,909

(Dangtran), U.S. Patent Application No. 20020114749 (Cole), U.S. Pat. No. 6,638,485 (Iida), U.S. Patent Application No. 20030185718 (Sellakumar), U.S. Patent Application No. 20030147793 (Breen), and U.S. Pat. No. 6,878,358 (Vosteen). However, even though it is known to inject halogen forms at some stage of the combustion process, such a process does not utilize a complexing method on a sorbent surface for conducting the oxidation and capture. Further, the alkaline material is rapidly surface-coated by the large concentrations of acid gases, lowering its capacity for adsorption of Hg(II). It is also recognized that the halogen forms initially introduced or generated are far more reactive to the large concentrations of $SO_2$ and moisture in the flue gas, and so gas-phase reactions of the halogens with Hg are hindered. In contrast, the present invention takes advantage of the Lewis acid complexes that rapidly form on the sorbent surface to effect the Hg oxidation, rather than rely on gas phase reactions for oxidation. Thus HCl, HBr, $SO_2Br$, and other gas-phase products all festoon the surface and promote the activity of the sorbent by forming complexes with the sorbent to form a promoted sorbent.

Accordingly, there remains a need for more economical and effective mercury removal technology. This invention provides for cost-effective removal of pollutants, including mercury, using sorbent enhancement additives and/or highly reactive sorbents, with contact times of seconds (or less), and that may be regenerated and reused.

## SUMMARY

The various embodiments of the present invention overcome the various aspects of the deficiencies of the prior art and provide new and economical methods for the removal of mercury from the gases produced in the utilization of fossil fuels.

A halogen/halide-promoted sorbent is described that is highly effective for the removal of mercury from flue gas streams. The sorbent comprises any activated carbon and/or non-carbon compound, such as porous or vesicular felsic or basaltic materials, clay-based compounds, alkaline compounds, calcium hydroxide compounds, sodium acetate compounds, and/or bicarbonate compounds, or a combination thereof. Optional secondary components and alkali may be added to further increase reactivity and mercury capacity. Mercury removal efficiencies obtained exceed or match conventional methods with added benefits such as reduced costs. Optionally, the promoted sorbent can be regenerated and reused. Sorbent treatment and/or preparation methods are also described. Methods for in-flight preparation, introduction, and control of the sorbent, promoter and promoted sorbent into the mercury contaminated gas stream are described.

When a promoted or a non-promoted base sorbent reacts with elemental or oxidized mercury, a mercury/sorbent chemical composition is formed and, in the case of elemental mercury reacting with the promoted base sorbent, the mercury is oxidized. As discussed in further detail in other portions of the specification, the base sorbent may be either a carbon or a non-carbon material or a combination thereof. Additionally, the mercury/sorbent chemical composition may be comprised of covalent bonds, ionic bonds and/or chemical complexes between the promoted or non-promoted base sorbent and the oxidized mercury. The Lewis basic groups on the non-promoted base sorbent, or the non-promoted portions of a promoted base sorbent, are available for reaction with the Lewis acid groups of already existing oxidized mercury in the mercury containing gas. Thus, mercury may be removed from the mercury containing gas stream through the formation of multiple and various mercury/sorbent chemical compositions even within the same process. For example, multiple sites on a sorbent particulate can form multiple and various mercury/sorbent chemical compositions in the case where only a portion of the sites on the base sorbent particulate are promoted.

In some embodiments, a carbon and/or non-carbon promoted sorbent and/or a combination thereof is provided comprising a sorbent structure that has reacted with a promoter selected from the group consisting of halides, halogens, and combinations thereof, such that the reaction product is effective for the removal of mercury from a gas stream. The carbon sorbent comprises reactive Lewis acid groups/sites; the non-carbon sorbent comprises reactive Lewis basic groups/sites.

In an embodiment, a promoted carbon and/or non-carbon sorbent is provided wherein the base sorbent is selected from the group consisting of carbon, activated carbon, porous or vesicular felsic and basaltic materials, clay-based compounds, alkaline compounds, calcium hydroxide compounds, sodium acetate compounds, and/or bicarbonate compounds, or a combination thereof, with an average particle size similar to that of fly ash produced from a thermal process (combustion or gasification) or greater than that of fly ash produced such that it is physically separable therefrom, and combinations thereof, and the promoter is selected from the group consisting of molecular halogens, Group V (CAS nomenclature is used throughout) halides, Group VI halides, hydrohalides, and combinations thereof. In an embodiment, the promoted sorbent (carbon, non-carbon, or their combination) may have a mass mean particle diameter such that it can be substantially separated by physical means from entrained ash in the gas stream from which mercury is to be removed. In an embodiment, the base sorbent (carbon, non-carbon, or their combination) may have a mass mean particle diameter greater than about 40 micrometers.

In another embodiment, the promoted sorbent comprises from about 1 to about 30 grams of promoter per 100 grams of base sorbent. Another embodiment further comprises an optional secondary component comprising a halogen or a hydrohalide such that the reactivity and mercury capacity of the promoted sorbent are enhanced.

In another embodiment, the concentration of the optional secondary component on the finished sorbent is within the range of from about 1 to about 15 wt % of the concentration of the promoter on the finished sorbent.

In another embodiment, an optional alkali component may preferably be added to provide a synergistic effect through combination of this alkali with the base sorbent.

In another embodiment, the optional secondary component is selected from the group consisting of Group V halides, Group VI halides, HI, HBr, HCl, and combinations thereof. In another embodiment, the promoter is substantially in vapor form when combined with the base sorbent. In another embodiment, the promoter is combined with an organic solvent prior to reaction with the base sorbent. In another embodiment, the promoter and optional secondary component are combined with the base sorbentsubstantially simultaneously. Another embodiment further comprises adding a mercury-stabilizing reagent selected from the group consisting of S, Se, $H_2S$, $SO_2$, $H_2Se$, $SeO_2$, $CS_2$, $P_2S_5$, and combinations thereof. Another embodiment further comprises adding an optional alkali component.

In an embodiment, a method is provided comprising providing a granular base sorbent and reacting the base

sorbent with a promoter selected from the group consisting of halogens, halides, and combinations thereof, such that the reaction product comprises a promoted sorbent effective for removal of mercury from a gas stream. In a further embodiment, the reaction product comprises from about 1 to about 30 grams of promoter per 100 grams of base sorbent. In another embodiment the reaction product has an average particle-size distribution greater than the average size of entrained ash particles in the gas stream from which mercury is to be removed, such that the reaction product can be substantially removed from the entrained ash particles by physical means. In another embodiment, the reaction product has a mass mean particle diameter greater than about 40 micrometers.

In another embodiment, the promoter is selected from the group consisting of molecular halogens, hydrohalides, Group V halides, Group VI halides, and combinations thereof. In another embodiment, the promoter is in the gas phase when contacting the base sorbent (carbon, non-carbon, or their combination). In another embodiment, the promoter is in an organic solvent when contacting the base sorbent (carbon, non-carbon, or their combination).

In another embodiment, the promoter is selected from the group consisting of $Br_2$, a Group V bromide, a Group VI bromide, and combinations thereof.

In another embodiment, the method further comprises reacting the granular non-carbon with an optional secondary component comprising a halogen or a hydrohalide such that the reactivity and mercury capacity of the promoted sorbent are enhanced. In another embodiment, the promoter and optional secondary component are contacted simultaneously with the non-carbon base sorbent. In another embodiment, the method further comprises adding a mercury-stabilizing reagent selected from the group consisting of S, Se, $H_2S$, $SO_2$, $H_2Se$, $SeO_2$, $CS_2$, $P_2S_5$, and combinations thereof. In an embodiment, a method is provided for control of mercury in a flue gas with substantially lower sorbent requirements. Through enhanced sorbent reactivity, mercury removal per gram of sorbent is increased, thereby decreasing the capital and operating costs by decreasing sorbent requirements.

In an embodiment, the promoted sorbent is introduced by direct injection into the flue gas stream. In another embodiment, the base sorbent is promoted within the flue gas stream

In an embodiment, a method is provided for reducing mercury in flue gas comprising providing a base sorbent, either by injection or in situ creation, into a mercury-containing flue gas stream, collecting greater than 70 wt % of the mercury in the flue gas on the promoted sorbent to produce a cleaned flue gas, and substantially recovering the promoted sorbent from the cleaned flue gas. In embodiments where less than 70 wt % mercury removal is desired, the required removal is attained using less base sorbent as would be required with standard base sorbent. In a further embodiment, the method further comprises monitoring the mercury content of the clean flue gas, regenerating the recovered promoted sorbent, and using the monitored mercury content of the cleaned flue gas to control the rate of base sorbent and promoter. In another embodiment the injected promoted sorbent is prepared in-flight by reacting a base sorbent (carbon, non-carbon, or their combination) and a promoter within a pneumatic transport line from which the reaction product is injected to the mercury-containing flue gas stream.

In another embodiment, the promoter is selected from the group consisting of molecular halogens, halides, and combinations thereof. In another embodiment, the promoter is reacted in the gas phase or as a vapor. In another embodiment, the promoter is added at from about 1 to about 30 grams per 100 grams of the base sorbent (carbon, non-carbon, or their combination).

In another embodiment, the injected promoted sorbent is prepared in-flight by reacting a base sorbent (carbon, non-carbon, or their combination), a promoter, and an optional secondary component to enhance the reactivity and capacity of the promoted sorbent within a pneumatic transport line from which the reaction product is injected to the mercury-containing flue gas stream.

In another embodiment, the optional secondary component is selected from the group consisting of iodine, hydrohalides, Group V halides, Group VI halides, and combinations thereof. In another embodiment, the optional secondary component is added at from about 1 to about 15 wt % of the promoter content. In another embodiment, the method further comprises adding to the promoted sorbent a mercury-stabilizing reagent selected from the group consisting of S, Se, $H_2S$, $SO_2$, $H_2Se$, $SeO_2$, $CS_2$, $P_2S_5$, and combinations thereof.

In an embodiment, the method further comprises coinjecting an optional alkaline material, including without limitation alkaline and alkaline-earth components, to improve the efficiency of mercury capture by capturing oxidized mercury and/or capturing gaseous components that might otherwise reduce promoted sorbent capacity. In another embodiment, the optional alkaline material may preferably comprise calcium oxide, sodium carbonate, and the like, as are known in the art.

In another embodiment, the method further comprises using the monitored mercury content of the cleaned flue gas to control the composition of the promoted sorbent. In another embodiment, the promoted sorbent is prepared in-flight by reacting a base sorbent (carbon, non-carbon, or their combination) and a promoter within the flue gas stream or in a transport line from which the reaction product is injected to the mercury-containing flue gas stream, wherein the promoter is selected from the group consisting of molecular halogens, halides, and combinations thereof, wherein the promoter is reacted in the gas phase or as a vapor, wherein the promoter is added at from about 1 to about 30 grams per 100 grams of the base sorbent (carbon, non-carbon, or their combination), wherein the rate at which the promoter is added and the rate of promoted sorbent injection are determined by a digital computer based, at least in part, on the monitored mercury content of the cleaned flue gas.

In an embodiment, a method for reducing the mercury content of a mercury and ash-containing gas stream is provided wherein particulate carbon and/or non-carbon promoted sorbent with a mass mean size greater than 40 μm is injected into the gas stream, mercury is removed from the gas by the promoted sorbent particles, the promoted sorbent particles are separated from the ash particles on the basis of size, and the promoted sorbent particles are reinjected to the gas stream. In another embodiment, the mercury-containing promoted sorbent particles are regenerated to remove some or substantially all of the mercury. In another embodiment, an alkaline component is coinjected into the gas stream. In another embodiment, the promoted sorbent may further comprise a promoter. The promoter may preferably comprise a halide, a halogen, or both.

In an embodiment, a method for reducing mercury in a mercury-containing gas to a desired level is disclosed. The method comprises reacting a carbon base sorbent with at least one promoter selected from the group consisting of molecular halogens, halides, and combinations thereof to

produce a promoted carbon sorbent; allowing said promoted carbon sorbent to interact with a mercury-containing gas to capture mercury in the mercury-containing gas on the promoted sorbent to produce a cleaned gas; and monitoring the mercury content of the cleaned gas. In some embodiments, the carbon base sorbent and the promoter are introduced into the mercury-containing gas at the same location or at separate locations. In some embodiments, the carbon base sorbent or promoter or combination thereof is introduced into the mercury-containing gas at one or more locations. In an embodiment, the rate at which the carbon base sorbent is introduced or the rate at which the promoter is introduced or combination thereof is adjusted according to the monitored mercury content of the cleaned gas so that the mercury content of the cleaned gas is maintained at substantially the desired level with minimal operating cost.

In a further embodiment, the method comprises reacting a non-carbon base sorbent with at least one promoter selected from the group consisting of molecular halogens, halides, and combinations thereof to produce a promoted non-carbon sorbent; allowing said promoted non-carbon sorbent to interact with a mercury-containing gas to capture mercury in the mercury-containing gas on the promoted sorbent to produce a cleaned gas; and monitoring the mercury content of the cleaned gas. In some embodiments, the non-carbon base sorbent and the promoter are introduced into the mercury-containing gas at the same location or at separate locations. In some embodiments, the non-carbon base sorbent or promoter or combination thereof is introduced into the mercury-containing gas at one or more locations. In an embodiment, the rate at which the non-carbon base sorbent is introduced or the rate at which the promoter is introduced or combination thereof is adjusted according to the monitored mercury content of the cleaned gas so that the mercury content of the cleaned gas is maintained at substantially the desired level with minimal operating cost.

In a further embodiment, a method for reducing mercury in a mercury-containing gas to a desired level is presented. The method comprises reacting a base sorbent with at least one promoter selected from the group consisting of molecular halogens, halides, and combinations thereof to produce a promoted sorbent, wherein said base sorbent is selected from the group consisting of a non-carbon material, a carbon material, and combination thereof; allowing said promoted sorbent to interact with a mercury-containing gas to capture mercury in the mercury-containing gas on the promoted sorbent to produce a cleaned gas; and monitoring the mercury content of the cleaned gas.

In some embodiments, the base sorbent and the promoter are introduced into the mercury-containing gas at the same location or at separate locations. In some embodiments, the base sorbent or promoter or combination thereof is introduced into the mercury-containing gas at one or more locations. In some embodiments, introducing the base sorbent and the promoter comprises injecting the base sorbent and the promoter into the mercury-containing gas. In some embodiments, the promoter is introduced into the mercury-containing gas upstream of the introduction of the base sorbent. In some embodiments, the promoter is introduced upstream of a boiler or a combustion chamber. In an embodiment, the rate at which the base sorbent is introduced or the rate at which the promoter is introduced or combination thereof is adjusted according to the monitored mercury content of the cleaned gas so that the mercury content of the cleaned gas is maintained at substantially the desired level with minimal operating cost.

In an embodiment, the base sorbent for the promoted sorbent is selected from the group consisting of carbon, activated carbon, porous felsic materials, vesicular felsic materials, porous basaltic materials, vesicular basaltic materials, clay-based compounds, alkaline compounds, calcium hydroxide compounds, sodium acetate compounds, bicarbonate compounds, and combinations thereof. In embodiments, the non-carbon material comprises Lewis basic groups and the carbon material comprises Lewis acid groups. In some cases, the non-carbon material comprises amorphous forms of tectosilicates comprising nanoscale cavities lined with Lewis basic oxygen associated with alkaline-earth metals. The alkaline-earth metals comprise Group I and Group II alkaline-earth metals. In some other cases, the non-carbon material comprises amorphous forms of phyllosilicates comprising nanoscale cavities lined with Lewis basic oxygen.

In an embodiment, the promoted sorbent comprises metastable complexes formed between the promoter of this disclosure and inorganic species on the non-carbon base sorbent. In some embodiments, the inorganic species is selected from the group consisting of sodium compounds, calcium compounds, magnesium compounds, aluminum compounds, iron compounds, and combinations thereof. In an embodiment, the promoted sorbent comprises metastable complexes formed between the promoter of this disclosure and metal-oxygen-metal structures on the non-carbon base sorbent. In some embodiments, the promoter after being complexed with the metal-oxygen-metal structures is in the form selected from the group consisting of a dihalogen group, a halogen atom, a hydrohalogen group, a Group V halide, a Group VI halide, and combinations thereof. In an embodiment, the promoted sorbent comprises activated Lewis basic groups or activated Lewis acid groups or combination thereof. In some embodiments, the interaction between promoted sorbent and said mercury-containing gas stream comprises mercury diffusing from the gas phase onto said promoted sorbent surface; and reacting with the activated Lewis basic groups or activated Lewis acid groups or combination thereof to cause chemisorption on the promoted sorbent surface.

In an embodiment, the method for reducing mercury in a mercury-containing gas to a desired level further comprises pretreating the base sorbent to increase the number of Lewis basic groups or Lewis acid groups or combination thereof. In some cases, the pretreating methods comprise chemical treatment, thermal treatment, vacuum treatment, and combinations thereof. In some embodiments, chemical treatment comprises acid treatment and alkaline treatment. In an embodiment, the method for reducing mercury in a mercury-containing gas to a desired level further comprises introducing an alkali component into the mercury-containing gas.

As will be described in more detail below, the present invention thus provides several advantages over previously known techniques, including significantly more effective and economical mercury sorbents for effluent gases, advantageously applicable to treating gas streams from combustion and gasification systems.

The foregoing has outlined rather broadly the features and technical advantages of the present invention in order that the detailed description of the invention that follows may be better understood. Additional features and advantages of the invention will be described hereinafter that form the subject of the claims of the invention. It should be appreciated by those skilled in the art that the conception and specific embodiments disclosed may be readily utilized as a basis for modifying or designing other structures for carrying out the

same purposes of the present invention. It should also be realized by those skilled in the art that such equivalent constructions do not depart from the spirit and scope of the invention as set forth in the appended claims.

## BRIEF DESCRIPTION OF THE DRAWINGS

For a more detailed description of the preferred embodiments of the present invention, reference will now be made to the accompanying drawings.

FIG. **1** schematically illustrates methods for preparation of promoted carbon and/or non-carbon sorbents in accordance with the present invention.

FIG. **2** illustrates a proposed mechanistic model of the chemical reactions resulting in the oxidation and capture of mercury.

FIG. **3** schematically illustrates preparation of promoted carbon and/or non-carbon sorbents and processes for flue gas mercury reduction in flue gases and/or product gases from a gasification system in accordance with the present invention, including in-flight preparation of promoted carbon and/or non-carbon sorbent.

FIG. **4** illustrates a mechanism for promotion of metal oxide base sorbent via formation of a reactive halogen complex sorbent and subsequent capture of elemental mercury on the promoted sorbent.

FIG. **5**A schematically illustrates an exemplary process flow diagram for in-flight preparation of a promoted carbon and/or non-carbon sorbent.

FIG. **5**B schematically illustrates an exemplary process flow diagram for in-flight preparation of a promoted carbon and/or non-carbon sorbent.

FIG. **6** is a block diagram illustrating the use of the invention in a coal fueled facility.

## DETAILED DESCRIPTION

Herein will be described in detail specific preferred embodiments of the present invention, with the understanding that the present disclosure is to be considered an exemplification of the principles of the invention and is not intended to limit the invention to that illustrated and described herein. The present invention is susceptible to preferred embodiments of different forms or order and should not be interpreted to be limited to the specifically expressed methods or compositions contained herein. In particular, various preferred embodiments of the present invention provide a number of different configurations and applications of the inventive method, compositions, and their uses.

The present invention provides a cost-effective way to capture pollutants by utilizing exceptionally reactive halogen/halide-promoted sorbents using a bromide (or other halogen/halide) treatment of the promoted sorbent, that capture mercury via mercury-sorbent surface reactions, at very short contact times of seconds or less. The reactivity of the promoted sorbent toward the pollutants (i.e., mercury) is greatly enhanced, and the sorption capacity can be regenerated; i.e., the promoted sorbent may be regenerated, recycled and/or reused.

The treated base sorbents (carbon, non-carbon, or their combination), treatment techniques, and optional additives discussed herein have applicability to mercury control from the product or effluent gas or gases from gasification systems, syngas generators, and other mercury-containing gas streams, in addition to the flue gas from combustion systems. Thus it should be understood that the terms combustion system and flue gas as used throughout this description may apply equally to gasification systems and syngas or fuel gas, as will be understood by those skilled in the art.

Hereinafter the disclosure may at times discuss the use of carbon base sorbents in further details; however the use of non-carbon base sorbents and a combination of carbon and non-carbon base sorbents is also contemplated to at least the same degree as carbon base sorbents.

Referring now to FIG. **1**, there is shown a block flow diagram illustrating some preferred embodiments of the process of the present invention to prepare promoted sorbents useful for mercury capture in a mercury containing gas, such as a flue gas and/or product gas from gasification system streams. In a preferred embodiment illustrated by path **10-20**, block **10** illustrates providing a base sorbent while block **20** illustrates adding a halogen or halide promoter that reacts with the base sorbent to produce a product-promoted sorbent. In embodiments where the halogen or halide is added, for example, as a vapor, no further steps may be necessary. In embodiments where the halogen or halide is added in, for example, a solvent, it may be desirable to employ solvent removal as illustrated by block **20**A to produce a product-promoted sorbent suitable for injection.

Referring still to FIG. **1**, another preferred embodiment of the process of the present invention is illustrated by path **10-20-30**, comprising providing a base sorbent as shown by block **10**, adding a halogen or halide promoter that reacts with the base sorbent, illustrated at block **20**, and adding a secondary component illustrated at block **30** that reacts with the result of block **20** to produce a product-promoted sorbent. In embodiments where both the halogen or halide promoter and the secondary component are added, for example, as a vapor, no further steps may be necessary. In embodiments where the halogen or halide promoter and/or secondary component are added in, for example, a solvent, it may be desirable to employ solvent removal as illustrated by block **30**A to produce a product-promoted sorbent suitable for injection.

Referring still to FIG. **1**, another preferred embodiment of the process of the present invention is illustrated by path **10-40**, comprising providing a base sorbent as illustrated at block **10** and adding a halogen or halide promoter and a secondary component to the base sorbent together, with which they react to produce a product-promoted sorbent as illustrated by block **40**. As above, in embodiments where vapor additions are made to the base sorbent, no further steps may be desired. In embodiments where one or more components are added in solvent, a solvent removal step may be provided as illustrated by block **40**A to produce a product-promoted sorbent suitable for injection.

Referring still to FIG. **1**, another preferred embodiment of the process of the present invention is illustrated by path **10-50** in combination with path **20-50**. In this embodiment, a base sorbent as illustrated by block **10** is introduced to the mercury containing gas as illustrated by block **50** while a halogen or halide promoter as illustrated by block **20** is introduced to the mercury containing gas stream. Thus the base sorbent and promoter react at block **50** to produce a product-promoted sorbent. In a similar manner, a secondary component as illustrated by block **30** may be added to the halogen or halide promoter as illustrated by block **20** and introduced into the mercury containing gas as illustrated by block **50**. In embodiments where both the halogen or halide promoter and secondary component are added, for example, by vapor, no further steps may be taken. In embodiments where the halogen or halide and/or secondary component are

added in, for example, a solvent, it may be desirable to employ solvent removal as illustrated by block **20**A and/or block **30**A.

Referring still to FIG. **1**, also illustrated are preferred embodiments in which, as illustrated by block **50**, a mercury containing gas stream is treated with product-promoted carbon sorbent prepared as described above.

In some preferred embodiments, the carbon base sorbent provided may preferably be any of several types, as understood by those skilled in the art. For example, the carbon base sorbent may include powdered activated carbon, granular activated carbon, carbon black, unburned carbon, carbon fiber, carbon honeycomb or plate structure, aerogel carbon film, pyrolysis char, regenerated activated carbon from product-promoted carbon sorbent, or other types as known in the art.

In some preferred embodiments, the carbon base sorbent provided may preferably have a mass mean particle size greater than the fly ash in a mercury containing gas, such as a flue gas stream, to be treated.

In some preferred embodiments, the carbon base sorbent provided may preferably have a mass mean particle diameter preferably greater than 40 micrometers, more preferably greater than 60 micrometers, or a particle-size distribution greater than that of the fly ash or entrained ash in a flue gas stream, or other mercury containing gas, to be treated, such that the activated carbon and ash can be separated by physical means.

In some preferred embodiments, the halogen or halide promoter that is added to, and reacts with, the carbon base sorbent may preferably comprise, by way of illustration and not limitation, a molecular halogen in vapor or gaseous form, a molecular halogen in an organic solvent, a Group V or Group VI halide, such as $PBr_3$ or $SCl_2$, respectively, in vapor, liquid, or solution form (though not in an aqueous solvent).

Embodiments are also provided in which the organic solvent may preferably comprise a chlorinated hydrocarbon, such as dichloromethane, a hydrocarbon solvent, including for example, petroleum ether, ligroin, pentane, hexane, toluene, and benzene, carbon disulfide, a waste solvent, an ether, a recycled solvent, a supercritical solvent, such as supercritical $CO_2$, water (though not in the case of a Group V or Group VI halide), and others as will be apparent to those of skill in the art.

Referring now to FIG. **4**, a theory is illustrated developed from scientific evidence to explain the nature of the promoting compounds. For example, as illustrated in FIG. **4**, a molecular bromine molecule forms a complex with the surface of the base sorbent comprising a high surface area form of a metal oxide. Complexing with bromine can occur at surface and defect sites on the surface of the glassy amorphous tectosilicates by association with the Lewis basic oxygen lining the interstitial cavities and the alkali actions on the surface. Molecular hydrogen bromide or an electrophilic or Lewis acid bromine compound react to form a similar structure. The precedence for this promotion of a metal oxide surface complex with an acidic species is described in a paper by Stark and Klabunde (Klabunde, K. J. Chem. Mater. 1996, 8, 1913-1918) who showed addition of acids, HCl, $SO_3$, and NO, to a MgO surface to form a surface complex. In U.S. Pat. No. 6,517,423 to Koper et al. the described surface complexes were active for destroying biological agents and toxins. As shown in FIG. **4**, addition of halogens to a metal oxide surface (A) can form a complex that could be described as a bromide-oxybromide species (B), in which electrophilic reactivity is maintained, owing to the formation of positive charges on the surface. The electrophilic complex formed on the metal oxide base sorbent comprises an active site for oxidation of elemental mercury. Addition of mercury to the complex results in formation of a mercury oxygen bond and, simultaneously, a mercury bromine bond as shown in complex C in FIG. **4**. Thus the final structure is a stable oxidized Hg form (D) described as a metaloxymercuric bromide.

In summary, it has now been found that the formation of the new bromide complex with the metal oxide surface increases the surface reactivity toward mercury and other pollutants. Additionally, the resulting bromide compound is uniquely suited to facilitate oxidation of the mercury. The effectiveness of the oxidation apparently results from the promotion effect of the halide, exerted on the developing positive charge on the mercury during the oxidation, known in the chemical art as a specific catalytic effect. Thus as the mercury electrons are drawn toward the positive surface oxygen, the halide anion electrons are pushing in from the other side, stabilizing the positive charge developing on the mercury and lowering the energy requirement for the oxidation process. Bromide is especially reactive, owing to the highly polarizable electrons in the outer 4p orbitals of the ion. Thus adding HBr or $Br_2$ to the appropriate metal oxide forms a similar surface bromide complex, in which the positive oxygen oxidizes the mercury with the assistance of the bromide ion.

In embodiments, a non-carbon base sorbent with Lewis basic sites/groups comprising metal-oxygen-metal structures is activated by a promoter of this disclosure, forming a promoted sorbent. The promoter and the metal-oxygen-metal structures of the non-carbon base sorbent form metastable complexes, which are responsible for mercury capture via chemisorption. For example, metastable complexes may form between a halogen promoter and inorganic species on a non-carbon base sorbent, wherein inorganic species include sodium (Na), calcium (Ca), magnesium (Mg), aluminum (Al), iron (Fe) compounds, and combinations thereof. In some embodiments, the metastable complexes comprise a dihalogen group, such as Br—Cl, Br—Br, complexed with metal-oxygen-metal structures of the base sorbent. In some embodiments, the metastable complexes comprise a halogen atom, complexed with metal-oxygen-metal structures of the base sorbent. In some embodiments, the metastable complexes comprise a hydrohalogen group, complexed with metal-oxygen-metal structures of the base sorbent. In some embodiments, the metastable complexes comprise a Group V or Group VI halide, complexed with metal-oxygen-metal structures of the base sorbent. In some embodiments, the metal-oxygen-metal structures of the base sorbent are complexed with combinations of the functional groups disclosed herein. Without wishing to be limited by a theory, it is believed that mercury capture via chemisorption takes place through the action of mercury oxidation provided by these metastable complexes.

In embodiments, a carbon base sorbent with Lewis acid sites/groups comprising graphene sheets is activated by a promoter of this disclosure, forming a promoted sorbent. The promoter and the grapheme sheets of the carbon base sorbent form stable compounds, which are responsible for mercury capture via chemisorption. Without being limited by a theory, it is believed that mercury capture via chemisorption takes place through the action of mercury oxidation provided by these stable compounds. As one skilled in the art would appreciate, the versatility of chemistry associated with the base sorbent (carbon, non-carbon, or combination thereof) and the promoter of this disclosure

enables versatile applications of the promoted sorbent system for mercury capture. This is especially advantageous because mercury content in flue gases varies from facility to facility, from operation to operation, and from day to day.

Examples of non-carbon base sorbents are amorphous forms of tectosilicates that comprise nanoscale cavities lined with Lewis basic oxygen associated with Group I alkali metals and Group II alkaline-earth metals. Such tectosilicates can be found in naturally occurring minerals, including, but not limited to, perlite and pumacite. Examples of non-carbon base sorbents also include amorphous forms of phyllosilicates. It is appreciated that other minerals may be used and also treated chemically and thermally to increase the activity of the base sorbent materials, such as phyllosilicates in the amorphous forms.

In some embodiments, bentonites are used as non-carbon base sorbents, including sodium bentonite and calcium bentonite. The use of other types of bentonites is contemplated as is known to one skilled in the art. The application of bentonite base sorbents is by introducing them into the flue gas at a location of the mercury capture system wherein the temperature of that location is below 800° C.

In some embodiments, the base sorbents are treated chemically and/or thermally to increase their activity. For example, perlite as a base sorbent may go through vacuum treatment and then thermal treatment so as to reduce the moisture contained therein, increase its activity, and potentially alter its morphology. Other treatment processes include chemical treatment, such acid treatment and alkaline treatment. These treatment methods may be combined to achieve desired effects as known to one skilled in the art. One of the desired effects is to increase the number of available Lewis acid sites/groups in the carbon base sorbent and/or the number of available Lewis basic sites/groups in the non-carbon base sorbent for subsequent activation via reaction with a promoter disclosed herein.

Referring now to FIG. **3**, a schematic flow diagram is provided of mercury control system **100** comprising preparation of promoted base sorbents and flue gas mercury reduction in accordance with preferred embodiments of the present invention. In the exemplary embodiment shown, there is provided a base sorbent reservoir **110**, a halogen/halide promoter reservoir **120**, a secondary component reservoir **130**, and an alkali component reservoir **180**, each of which with corresponding flow control device(s) **201**, **202**, **203**, and **208**/**209**, respectively. In conjunction with the alkali component reservoir **180**, flow control devices **208** and **209** can be used independently, together, or not at all. Further, reservoirs **110**, **120**, **130** and **180** are optional and can be used in any combination, or not at all, whereby the otherwise stored components can be introduced into the system by other means either together or independently. Further, the alkali and secondary components may not be used at all within the system, if so desired.

As shown, reservoirs **110**, **120**, **130**, and **180** connect through their respective flow control devices and via associated piping, to transport line **115**. Alkali component reservoir **180** may also connect, through respective flow control devices and via associated piping, to transport line **118**. A source of air, nitrogen, or other transport gas(es) is provided by gas source **170** to transport line **115** for the purpose of entraining materials discharged from reservoirs **110**, **120**, **130**, and **180** and injecting such materials, via injection point **116**, into contaminated flue gas stream **15**. A source of air, nitrogen, or other transport gas(es) may be provided by gas source **171** to transport line **118** for the purpose of entraining materials discharged from reservoirs **180** and injecting such materials, via injection point **119**, into flue gas stream **15**. Gas sources **170** and **171** may be the same or different, as desired. Alternatively, transport gas(es) may be provided to both transport lines **115** and **118** by gas source **170** (connection from source **170** to line **118** not shown). Although gas sources **170** and **171** are shown in FIG. **3** as compressors or blowers, any source of transport energy known in the art may be acceptable, as will be appreciated by those of skill in the art.

For clarity, single injection points **116** or **119** are shown in FIG. **3**, although one skilled in the art will understand that multiple injection points and/or locations are within the scope of the present invention. In the embodiment shown, transport line **15** comprises multiple lines allowing for multiple injections and separate and/or combined injections of base sorbent **110** and promoter **120** and/or **130**. One mode of operation, by example, comprises providing base sorbent **110** in a common line which is promoted inline "in-flight" using promoter **120** and/or **130** and injected at point **116**. Another mode of operation, by example, comprises transport and injection of a base sorbent **110** in a separate line to a point downstream of the injection of promoter **120** and/or **130** in a line at point **116** which is upstream of injection of base sorbent **110**, resulting in in-flight preparation at a promoted sorbent within stream **15**.

In the exemplary embodiment shown, an optional optical density measuring device(s) **204** is connected to transport line **115** and/or **118** to provide signals representative of the optical density inside transport line **115** and/or **118** as a function of time.

Downstream from injection point **116** and **119** is provided particulate separator **140**. By way of illustration and not limitation, particulate separator **140** may comprise one or more fabric filters, one or more ESPs, or other particulate removal devices as are known in the art. It should be further noted that more than one particulate separator **140** may exist, sequentially or in parallel, and that injection point **116** and **119** may be at multiple locations upstream and/or downstream of **140** when parallel, sequential, or combinations thereof exist. Particulate separator **140** produces at least a predominantly gaseous ("clean") stream **142** and a stream **141** comprising separated solid materials. A sorbent/ash separator **150** separates stream **141** into a largely ash stream **152** and a largely sorbent stream **151**. Stream **151** may then preferably be passed to an optional sorbent regenerator **160**, which yields a regenerated sorbent stream **161** and a waste stream **162**.

An optional continuous emission monitor (hereinafter "CEM") **205** for mercury is provided in exhaust gas stream **35** to provide electrical signals representative of the mercury concentration in exhaust stream **35** as a function of time. The optional mercury CEM **205** and flow controllers **201**, **202**, **203**, **208**, and **209** are electrically connected via optional lines **207** (or wirelessly) to an optional digital computer (or controller) **206**, which receives and processes signals and preferably controls the preparation and injection of promoted carbon sorbent into contaminated flue gas stream **15**.

In operation, as example, promoted sorbent and/or an optional alkali component is injected into contaminated flue gas stream **15**. After contacting the injected material with the contaminated flue gas stream **15**, the injected material reduces the mercury concentration, transforming contaminated flue gas into reduced mercury flue gas, **25**. The injected material is removed from the flue gas **25** by separator **140**, disposed of or further separated by optional separator **150**, and disposed of or regenerated by an optional regenerator **160**, respectively. The reduced mercury clean

flue gas stream **142** is then monitored for mercury content by an optional CEM **205**, which provides corresponding signals to an optional computer/controller **206**. Logic and optimization signals from **206** then adjust flow controllers **201**, **202**, **203**, **208**, and **209** to maintain the mercury concentration in exhaust stream **35** within desired limits, according to control algorithms well known in the art. Flow controllers **201**, **202**, **203**, **208**, and **209** can also be adjusted manually or by some other automated means to maintain the mercury concentration in exhaust stream **35** within desired limits, according to control algorithms well known in the art.

Referring still to FIG. **3**, several embodiments are illustrated for preparation and injection of promoted sorbents and/or alkali components in accordance with the present invention. Stream **111** provides for introduction of base sorbent from reservoir **110**, as metered by flow controller **201** manually or under the direction of computer **206**. The halogen/halide may be combined and react with the base sorbent according to any of several provided methods. The halogen/halide may preferably be combined via line **121** directly into transport line **115**, within which it contacts and reacts with the base sorbent prior to injection point **116** or downstream at point **116**. This results in in-flight preparation of a promoted sorbent in accordance with the invention. Further, the halogen/halide may be combined via line **121***b* with the base sorbent prior to entering transport line **115**. Still further, the halogen/halide may be contacted and react with the base sorbent by introduction via line **121***c* into reservoir **110**. This option is preferably employed when, for example, reservoir **110** comprises an ebulliated or flueidized bed of base sorbent, through which halogen/halide flows in gaseous form or as a vapor. Of course, the halogen/halide may also preferably be contacted with the base sorbent in liquid form or in a solvent, as discussed previously, and solvent removal (not shown in FIG. **3**) may then be provided if necessary as mentioned with respect to embodiments discussed with reference to FIG. **1**.

Similarly, the optional secondary component may be contacted and react directly in transport line **115** via line **131**, or optionally as described above with respect to the halogen/halide, via lines **131***b* and **131***c*.

Similarly, the optional alkali component from **180** may either be added in transport line **115** directly, or may be injected separately by transport line **118**, combining downstream in flue gas **15** for synergistic effects with the base sorbent, promoted sorbent, or optional secondary components. Being able to vary on-site the amount of the optional alkali component relative to base sorbent, promoted sorbent, or optional secondary components is a key feature to overcome and optimize for site-specific operating and flue gas conditions.

In some preferred embodiments wherein contacting between components and reaction is performed in a liquid or solvent phase, stirring of such liquid and/or slurry mixtures may be provided. In other embodiments, the halogen/halide promoter and optional secondary component(s) may preferably be sprayed in solution form into or on the base sorbent. In some such embodiments, drying, filtering, centrifugation, settling, decantation, or other solvent removal methods as are known in the art may then be provided.

In embodiments wherein the halogen/halide promoter is in gaseous or vapor form, it may be diluted in air, nitrogen, or other gas as appropriate. The halide/halogen gas, for example, gaseous HBr or $Br_2$, may be passed through an ebulliated or flueidized bed of granular or fibrous base sorbent, with the promoted sorbent so produced removed from the top of the bed via gas entrainment for injection.

In some embodiments, the secondary component(s) may preferably comprise iodine or other halogens, hydrohalides, including without limitation HI, HBr, HCl, a Group V or Group VI element with a molecular halogen, such as $SCl_2$ and others. In some preferred embodiments, the promoted sorbent may comprise from about 1 to about 30 g of halogen/halide per 100 g of base sorbent. In some preferred embodiments, the promoted sorbent may comprise a secondary component in concentration of from about 1 to about 15 wt % of the concentration of the halogen/halide component.

In still other embodiments, the product-promoted sorbent may be applied to a substrate. In other embodiments, such prepared substrate(s) may be caused to contact a contaminated flue gas or gasification system product gas stream for mercury reduction purposes. Such substrates may be monolithic, rotating, or exposed to the gas stream in any number of ways known to those skilled in the art.

In some embodiments, a method is provided whereby a mercury stabilizing reagent is added to a promoted sorbent to produce a bifunctional sorbent. Such stabilizing reagent(s) may be sequentially added, either before or after the addition and reaction of the halogen/halide. In some preferred embodiments, the halogen/halide preferably comprises Br or HBr, and the mercury-stabilizing reagent may comprise S, Se, $H_2S$, $SO_2$, $H_2Se$, $SeO_2$, $CS_2$, $P_2S_5$, and combinations thereof.

Halogens in Mercury Capture

Methodologies for using halogens for the treatment of flue gas have been problematic, owing to their reactivity with other gases and metals, resulting in corrosion and health issues. A "halogen" is defined as a member of the very active elements comprising Group VIIA (CAS nomenclature is used throughout; Group VITA (CAS) corresponds to Group VIIB (IUPAC)) of the periodic table. In the molecular elemental form of the halogens, including $F_2$, $Cl_2$, $Br_2$, and $I_2$, the reaction with hot flue gas components leaves little to react with elemental mercury. The atomic elemental halogen form, which includes the flueorine, chlorine, bromine, and iodine atoms, is about a million times more reactive to mercury, but the concentration of the atomic forms is typically extremely low. In a large portion of electric utility coal combustion facilities, the concentrations are generally not sufficient to oxidize a significant amount of mercury.

The term "halide" as used herein is defined as a compound formed from the reaction of a halogen with another element or radical. In general, halide compounds are much less reactive than the molecular halogens, having a low chemical potential. Halides are considered reduced forms that do not, alone, oxidize other compounds. In the conventional view, therefore, a halide salt-treated sorbent will not effectively oxidize elemental mercury and capture elemental mercury.

Halogen-Promoted Sorbent Characteristics

The promoted sorbent described here has a very high initial reactivity for oxidizing mercury and therefore, can be used in very small amounts to achieve very high capture efficiencies, thus lowering operation costs and lessening waste disposal problems. In addition, further disposal reductions are obtainable by regenerating and reusing the promoted sorbents produced using the inventive technology. The time interval required for the mercury and the promoted sorbents of the present invention to successfully interact in a flue gas duct, with subsequent collection of the mercury on the promoted sorbent and ash, is very short—less than seconds. Clearly, such collection times require the promoted sorbent to have both high capacity and high reactivity toward mercury. The promoted sorbent can be utilized in a

very finely powdered form to minimize mass-transfer limitations. However, again, the reactivity should be very high to capture all of the mercury encountered by the fine particles. Additionally, use of these enhancement technologies allows capture to be effective for larger sorbent particles which also allows separation of the promoted sorbent from the ash to enable subsequent regeneration as well as ash utilization. One feature of this invention is the process to prepare a promoted sorbent containing a halide component formed on and/or within the base sorbent structure that provides a sorbent that is highly active on initial contact with the mercury-contaminated gas stream, which allows for very effective capture of the mercury.

The inventive sorbents chemically combine bromine species with Lewis acid/basic sites on the base sorbent. For example, x-ray photoelectron spectroscopy has established that the addition of bromine, chlorine, HBr, or HCl formed a chemical compound in the carbon structure. Thus the promoted sorbent produced from halogen and base sorbent does not represent a molecular halogen form, but rather a new chemically modified structure. This phenomenon may not occur with the less reactive iodine, where an $I_2$ molecular complex can exist on the carbon basal plane. In the case of bromine, modified cationic carbon has a high chemical potential for oxidation of mercury. Thus an entirely new model is presented for the reactivity of the bromine-treated carbon with mercury shown in FIG. **2**. The reactive carbon form can preferably be generated by the addition of bromine, hydrogen bromide, or combinations of bromine and other elements, as described herein. Halogen treatment resulted in higher-activity carbons because the halide anions (especially bromide and iodide) were effective in promoting oxidation by stabilizing the developing positive charge on the mercury in the transition state for oxidation. Based on this model, several innovative, inexpensive, activity-enhancing features have been developed.

Optional Second Component

It has been demonstrated that addition of an optional second component, in addition to the bromine, results in improved reactivity and capacity for the promoted sorbent, typically exceeding that of both the untreated base sorbent and the brominated carbon. The second compound comprises either a second halogen or a compound derived from a second halogen, such as HI. Thus in addition to having a reactive carbon form present, the second component generates a Lewis base with greater ability to stabilize the developing positive charge on the mercury. Thus the second component is an element with more polarized electrons (4p and 5p).

Optional Alkali Component

It has been demonstrated that addition of an optional alkali component with a base or promoted activated carbon results in improved mercury capture, typically exceeding that of both the untreated carbon and the promoted carbon. Test data indicate that flue gas contaminants, flue gas constituents ($SO_2$, NON, HCl, etc), operating temperature, mercury form, and mercury concentration may impact the effectiveness of the alkali addition. This suggests the need to be able to adjust and tailor the alkali-to-activated-carbon ratio on-site in order to overcome and optimize for a given set of site conditions.

The synergy that can be gained when coinjecting the two materials can be explained as follows. First, testing shows that binding sites on activated carbon (hereinafter "AC") can be consumed by chlorine species, sulfur species (i.e., sulfates), and other flue gas contaminants (arsenates, selenates, etc). The addition of optional alkali material will interact and react with these species/contaminants, thus minimizing their consumption of AC mercury binding sites. Second, testing also shows that standard AC will continue to oxidize mercury, even though the binding sites are fully consumed. This oxidized mercury can then react with alkali material and subsequently be captured by particulate control devices. Consequently, the addition of the optional alkali component acts to protect mercury-binding sites and capture oxidized mercury, thereby resulting in improved mercury reduction at lower cost. Alkali is generally much lower in cost (an order of magnitude less) than AC; thus more of it can be used, still resulting in overall lower costs.

In-Flight Sorbent Preparation

As stated previously, the halogen promoted sorbent can be readily produced in-flight. This is accomplished by, for example, contacting the vapors of any combination of halogens and, optionally, a second component, in-flight, with base sorbent particles. The particles may be dispersed in a stream of transport air (or other gas, such as the flue gas itself), which also conveys the halogen/halide-promoted sorbent particles to the flue gas duct, or other contaminated gas stream, from which mercury is to then be removed. There is no particular temperature requirement for this contact. This technology is obviously very simple to implement, and results in a great cost savings to facilities using this technology for mercury capture.

Referring to FIGS. **5**A and **5**B, process flow diagrams are shown as examples of the process for mercury removal from a mercury containing gas, such as a flue gas. In an embodiment shown at FIG. **5**A, gas inlet stream **501** passes through chamber **301** and enters air heater **302** as stream **502**; then it exits air heater **302** as stream **503** and passes through particulate control device **303** and enters scrubber **304** as stream **504**; finally it exits scrubber **304** as stream **505**. As shown, chamber **301** is a boiler, however, one skilled in the art will appreciate that chamber **301** can also be the combustion chamber of a coal fired boiler, a stand alone combustion chamber or any other chamber in which mercury containing gas is either generated or passed through. Injection streams **401**, **402**, **403** and **404**, in addition to stream **501**, are multiple locations wherein promoter, base sorbent, or a combination of promoter and base sorbent may be introduced.

FIG. **5**B shows an embodiment similar to that of FIG. A, but with the position of the scrubber and particulate control device switched. Specifically, gas inlet stream **501'** passes through chamber **301'** and enters air heater **302'** as stream **502'**; then it exits air heater **302'** as stream **503'** and passes through scrubber **304'** and enters particulate control device **303'** as stream **504'**; finally it exits particulate control device **303'** as stream **505'**. As shown, chamber **301** is a boiler, however, one skilled in the art will appreciate that chamber **301** can also be the combustion chamber of a coal fired boiler, a stand alone combustion chamber or any other chamber in which mercury containing gas is either generated or passed through. Injection stream locations **401'**, **402'**, **403'** and **404'**, in addition to stream **501'**, represent multiple locations wherein promoter, base sorbent, or a combination of promoter and base sorbent may be introduced.

At each of the aforementioned injection stream locations **401**, **401'**, **402**, **402'**, **403**, **403'**, **404** and **404'**, **501**, **501'** multiple injection points are contemplated so that promoter and base sorbent may be injected as a single injection stream or as separate injection streams, as further illustrated in the following exemplary embodiments.

In an embodiment, a promoter is introduced to chamber **301** at location **401**. A base sorbent (carbon, non-carbon, or

their combination) is introduced at location **402** upstream of air heater **302**. In a further embodiment, a promoter is introduced to at location **402** upstream of air heater **302**. A base sorbent (carbon, non-carbon, or their combination) is also introduced at location **402** either as a separate stream or as a mixed single stream with the promoter. In another embodiment, a promoter is introduced at locations **401** and **402**. A base sorbent (carbon, non-carbon, or their combination) is introduced at location **402** either as a separate stream or as a mixed single stream with the promoter.

With the aid of this disclosure, one of ordinary skill in the art will be able to configure the process in many different fashions for mercury removal using the promoted sorbent. All these configurations are considered equivalents of the disclosed process and therefore are within the scope of the claimed invention.

Advantages of On-Site Preparation

In-flight preparation of the halogen/halide-promoted sorbent on location produces certain advantages. For example, the treatment system can be combined with the base sorbent injection system at the end-use site. With this technique, the halogen/halide is introduced to the base sorbent air (or other gas, including to the flue gas or other mercury containing gas) mixture in a transport line (or flue gas duct part of the base sorbent storage and injection system). This provides the following benefits over current conventional concepts for treating sorbents off-site:

Capital equipment costs at a treatment facility are eliminated.

Costs to operate the treatment facility are eliminated.

There are no costs for transporting carbon and additive to a treatment facility.

The inventive process uses existing hardware and operation procedures.

The inventive technology ensures that the sorbent is always fresh and, thus, more reactive.

No new handling concerns are introduced.

There are no costs for removing carbon from treatment system.

The inventive process allows rapid on-site tailoring of additive-sorbent ratios in order to match the requirements of flue gas changes, such as may be needed when fuels are changed or loads are reduced, thus further optimizing the economics.

The inventive technology reduces the amount of spent sorbents that are disposed.

With the foregoing and other features in view, there is provided, in accordance with the present invention, embodiments including a process for preparing and regenerating halogen/halide-promoted sorbents, whose activity for mercury capture is enhanced by the addition of halogen (e.g., bromine) to the base sorbent structure.

Sorbent Injection Location

Some of the preferred embodiments contemplate the use of a halogen-promoted sorbent in a powdered form that has been injected into a flue gas stream before or after ash particulates have been removed. Other embodiments of the inventive composition of the halogen-promoted sorbent comprise a powdered modified AC prepared by adding $Br_2$ or HBr plus a second optional component. Other embodiments allow the addition of the optional alkali component in conjunction with a base AC and/or with the use of a halogen-based sorbent and any other combinations of the sorbent technologies provided in this patent. Other embodiments allow for in-flight preparation of promoted sorbents by using and combining the promoters and base sorbents. Alternatively, embodiments include methods wherein the base sorbent is on a moving contactor consisting of particles or fibers containing one or more of the compositions listed above.

Sorbent Regeneration

Any of the above embodiments of the halogen/halide-promoted carbon and/or non-carbon sorbent can be easily regenerated; the poisoning contaminants from the flue gas are preferably removed, and an inexpensive promoting agent added, to restore mercury sorption activity. This process of promoting the activity of the carbon and/or non-carbon itself contrasts with the earlier, more expensive, conventional methods of adding a reagent (such as peroxide, gold, triiodide, etc.) to a base sorbent. The halogen/halide-promoted carbon sorbent of the present invention, treated with bromine and/or optional components, is noncorrosive. Detailed examples of sorbent regeneration techniques are described in copending, commonly owned PCT Patent Application No. PCT/US04/12828, titled "PROCESS FOR REGENERATING A SPENT SORBENT," which is hereby incorporated by reference in its entirety.

Sorbent Injection Control Schemes

Another advantage of the present invention relates to the use of a feedback system to more efficiently utilize certain aspects of the invention. Where possible and desirable, the mercury control technology of the present invention may preferably utilize continuous measurement of mercury emissions as feedback to assist in control of the sorbent injection rate. Tighter control on the sorbent and optional component(s) levels can be achieved in this way, which will ensure mercury removal requirements are met with minimal material requirements, thus minimizing the associated costs. In an embodiment, the mercury emissions are continuously measured downstream of the injection location, preferably in the exhaust gas at the stack.

## EXAMPLES

To more clearly illustrate the present invention, an example is presented below. This example is intended to be illustrative, and no limitations to the present invention should be drawn or inferred from the example presented herein.

### Example 1

### Non-carbon-Promoted Sorbent Tests at Full-Scale Plants

Full-scale commercial tests were conducted at several coal-burning facilities equipped with ESPs wherein three types of pre-cursers were injected upstream of an ESP at 325° F. In all, more than thirty tests were performed with variations in base sorbent material, base sorbent material injection rates and promoter injection rates. Promoters were halogen-based materials. Base sorbents were clay-based materials such as perlite and pumacite, which are vesicular forms of tectosilicates comprising silicates and aluminate tetrahedra with alkali metals in the interstitual spaces. Each base sorbent was injected upstream from the ESP.

The flue gas flow rate for the test was approximately 23 million $dsft^3$/hr with a corresponding mercury flow rate of 0.0097 lbs Hg/hr. Initial mercury concentration in the flue gas prior to the introduction of the base sorbent or promoted sorbent was approximately 0.000417 lbs Hg/million $dsft^3$.

As shown in Table 1, each base sorbent was injected at three different test rates: about 100 lb/hr ("Low"), about 150 lb/hr ("Ave.") and about 200 lb/hr ("High"). At each test

rate, the mercury removal rate was measured both with and without the use of a promoter to show the relative benefit of introducing the promoter into the flue gas stream. For the tests where promoter was injected into the flue gas stream, promoter was injected at about 20 lb/hr for the "Low" tests, at about 25 lb/hr for the "Ave." tests and from about 30 to about 50 lb/hr for the "High" tests. The percent mercury removal for each test was calculated based on measurements taken from the inlet flue gas and the outlet flue gas. The results as shown in Table 1 clearly show a significant improvement in mercury capture when a promoter and base sorbent are injected, as compared to the injection of a base sorbent alone.

TABLE 1

Test Data for Non Carbon-Promoted Sorbents

| Base Sorbent | Base Sorbent Injection Rate (lb/hr) | | | Promoter Injection Rate (lb/hr) | | | Percent Removal of Mercury (%) | | |
|---|---|---|---|---|---|---|---|---|---|
| Material | Low | Ave. | High | Low | Ave. | High | Low | Ave. | High |
| Perlite | 100 | 150 | 200 | 0 | 0 | 0 | 37 | 40 | 43 |
| | 100 | 150 | 200 | 20 | 25 | 35 | 55 | 72 | 74 |
| Pumacite | 100 | 150 | 200 | 0 | 0 | 0 | 25 | 25 | 25 |
| | 100 | 150 | 200 | 20 | 25 | 50 | 52 | 60 | 65 |
| Clay-Based Mix of Silica and Alumina | 100 | 150 | 200 | 0 | 0 | 0 | 50 | 52 | 54 |
| | 100 | 150 | 200 | 20 | 25 | 30 | 58 | 65 | 74 |

## PROVISIONAL APPLICATION

A reactive sorbent material is described for capture of mercury in a vapor stream. The vapor stream includes flue gas from coal combustion or incineration, synthesis gas from gasification, as well as offgases from mineral processing, metal refining, retorting, cement manufacturing, chloralkali plants, dental facilities, and crematories. The sorbent is especially suited to, but not limited to, use in low-chlorine flue or exhaust gases where the mercury is mainly elemental. The sorbent comprises a bromide-modified carbon form containing a reactive compound produced by the reaction of bromine with the carbon. Other additional promoting substances can be added in smaller amounts to increase the reactivity with and sorption of elemental mercury. This combination results in a carbon bromide structure in the carbon lattice that can oxidize the mercury to a species that is strongly bonded to the carbon structure and, therefore, easily retained on the sorbent at higher temperatures in the presence of flue gas constituents. In some examples, the sorbent consists of a fine or coarse powdered material for injection into the gas stream or a granular or fibrous material for use in a fixed or moving bed. In some examples, the sorbent does not require in situ activation (an induction period) in a flue gas stream as do conventional activated carbon sorbents. Other additives of base chemistry (Ca, Na, and others) may be added to flue gas as a sorbent mixture, or co-injected to selectively sorb acid gases or other flue gas constituents to keep available reactive sites for mercury oxidation and subsequent capture. The sorbent can be regenerated by washing off contaminating components derived from flue gas that poison the spent sorbent. Novel methods for introduction of the sorbent dispersion into the mercury contaminated gas stream are described.

Following is an outline of examples of the invention. The invention may also take on various other examples or embodiments, as a person skilled in the art would understand.

1. A modified carbon sorbent was prepared by reacting the carbon with molecular bromine by applying a solution of molecular bromine in an organic solvent to the carbon, followed by removal of the modified carbon from the bulk of solvent and further removal of solvent from the pores by drying the carbon in air or nitrogen. The solution may also contain an additional promoting substance in small amounts. In one example, the amount of bromine taken up by the carbon ranges from <1 to about 30 g per 100 g of activated carbon, depending on the proportions used.

1A. (Dependent)

Same as 1, carbon is powdered activated carbon.

Carbon is granular activated carbon.

Carbon is very fine carbon black.

Carbon is very fine carbon fiber.

Carbon is aerogel carbon film.

Carbon is char recovered from pyrolysis process.

Carbon is powdered activated carbon of size distribution larger than fly ash size distribution, so that it can be physically separated from the ash and regenerated for reuse.

Carbon is regenerated from previous usage cycle and recycled.

Other desired types of carbon may also be used.

1B. (Dependent)

Same as 1, Solvent is chlorinated hydrocarbon such as dichloromethane.

Same as 1, Solvent is hydrocarbon solvent such as petroleum ether or ligroin or pentane or hexane or toluene or benzene.

Same as 1, Solvent is water.

Same as 1, Solvent is carbon disulfide.

Same as 1, Solvent is a waste solvent.

Same as 1, Solvent is an ether.

Same as 1, Solvent is recycled from previous batch.

Same as 1, Solvent is supercritical solvent such as $CO_2$.

Other desired types of Solvents may also be used.

1C. (Dependent)

Same as 1, solution of bromine is applied by stirring the carbon in the bromine solution.

Same as 1, solution of bromine is applied by spraying a solution of molecular bromine in an organic solvent, followed by removal of solvent from the pores by drying the carbon in air or nitrogen.

The bromine may also be applied using other desired techniques.

1D. (Dependent)

Same as 1, removal of solvent is by filtration, centrifugation, settling, and decantation and drying in vacuum, air, or other gas.

Same as 1, when sprayed or minimal volume, removal of solvent is by drying in air, vacuum, or other gas.

The solvent may also be removed using other desired techniques.

1E. (Dependent)

Same as 1, additional substance is iodine, at 1%-10% of the bromine concentration added.

Same as 1, additional substance is hydrohalide (HI, HBr, HCl), etc, 1%-10% of bromine.

Same as 1, additional substance is a compound comprised of a Group V or VI element or combination of Group V or VI with Group VII element, such as $SCl_2$, 1-10 wt % of bromine.

A modified carbon sorbent was prepared by reacting the carbon with molecular bromine by contacting the carbon with a gas containing molecular bromine. In one example, the amount of bromine taken up by the carbon ranges from <1 to about 30 g per 100 g of activated carbon, depending on the proportions used.

Contacting is by passing the $Br_2$ gas through a bed of the carbon.

Bed is ebullated or fluidized.

Bed is moving bed of granules or fibers.

Contacting is by admitting $Br_2$ gas to a duct through which the carbon is transported from a reservoir to the flue gas duct via an air-driven entrainment method, thus promoting the activity of the carbon in-flight.

Same additives as 1E, except these are added in the gas phase, and added in-flight as in 2 above.

A modified activated carbon sorbent was prepared by reacting the carbon with hydrogen bromide (HBr) by stirring the carbon in a solution of HBr in an organic solvent or in water, followed by removal of the modified carbon from the bulk of solvent and further removal of solvent from the pores by drying the carbon in air or nitrogen. In one example, the amount of bromine taken up by the carbon ranges from <1 to about 30 g per 100 g of activated carbon, depending on the proportions used.

Same dependent clauses as in 1A with regard to carbon forms. Same solutions and treatment as 1B, 1C, 1D.

Same additives as 1E, added into the solution phase or later in the gas phase, and added in-flight as in 2 above.

An activated carbon sorbent was prepared by impregnating hydrogen bromide by passing a gas composition containing hydrogen bromide diluted with nitrogen or air through a fluidized bed or ebullated bed of the carbon. In one example, the amount of bromine taken up by the carbon ranges from <1 to about 30 g per 100 g of activated carbon, depending on the proportions used.

Same dependent clauses as in 1A with regard to carbon forms.

Contacting options are similar to 2.

Sequential treatment of activated carbon with bromine or HBr, followed by another mercury stabilizing reagent to generate a highly reactive bifunctional sorbent, the reagent to include sulfur and selenium species, such as $H_2S$, $SO_2$, $H_2Se$, Se, $SeO_2$, $CS_2$, $P_2S_5$.

6. Sequential treatment of activated carbon with mercury stabilizing reagent, followed by bromine or HBr to generate a highly reactive bifunctional sorbent, the reagent to include sulfur and selenium species, such as $H_2S$, $SO_2$, $H_2Se$, Se, $SeO_2$, $CS_2$, $P_2S_5$.

Treatment of a carbon with a Group V or VI element combined with Group VII element, such as $PBr_3$ or $SCl_2$. In one example, the amount of Group V or VI halide is 1-30 wt % of the carbon. The compound is added in vapor phase or in solution (solvent is hydrocarbon, chlorinated hydrocarbon, or other solvent as described in 1B, but not water, since the compound is destroyed in water solution).

The process for preparing the bromine-containing activated carbon sorbent as described in Examples 1-6 and coupled with the injection of the bromine-containing fine-particle sorbent into the contaminated gas stream and subsequent removal of the fine particles of sorbent from the gas stream in a collection device, such as bag filtration of electrostatic precipitator (ESP).

The process of using additives (1-8) in conjunction with sorbents to capture acid gases and other flue gas constituents that block oxidation reactions or consume sorbent sites that would otherwise capture mercury. The additive is a compound comprised of Group I or II elements, such as Ca, Na, and others. These additives of base chemistry may be added to flue gas as a sorbent mixture or co-injected to selectively sorb acid gases or other gas constituents that compete for mercury reactive/sorption sites, thereby improving the effectiveness of activated carbon to capture mercury. In addition, the base additives can augment the treated activated carbon by helping to capture oxidized mercury forms in the flue gas, such as mercuric chloride, or that are produced on the carbon sorbent, such as mercuric bromide, but are released to the gas phase as the sorbent becomes saturated or capacity limited.

The process of preparing a larger-than-normal (>40 μm) sorbent particle size, promoting with the halogen treatment as described in 1-8, using the treated sorbent for capture of mercury by injecting in the flue gas, and finally separating and recovering the sorbent from the ash particles. The larger sorbent size thus will allow easy mechanical/physical separation so that sorbent can be regenerated, recycled, and reused, and the ash can be sold as a low-carbon cementatious byproduct for concrete. The separation can be effected by various methods, such as density (gravity), floatation, or sieving methods.

The process for preparing the bromine-containing activated carbon sorbent as described in Example 1-10, coupled with the direct injection of the slurry of the prepared fine-particle sorbent in the solvent or aqueous phase, so that the aerosol particles of the slurry achieve a high degree of dispersion in the gas stream and evaporation of the solvent in the hot gas occurs rapidly. The amount of slurry added is flow-controlled, and the concentration of particles in the slurry is monitored by optical density measurements prior to injection. Collection of particles is performed.

12. The process for preparing the bromine-containing activated carbon sorbent, as described in Examples 2 and 4, coupled where the fine-particle dispersion of brominated sorbent in the gas stream at the top of the ebullated bed is led to the flue gas or offgas duct where the said dispersion is contacted with mercury-contaminated flue gas or offgas stream. The amount of aerosol dispersion added is controlled by the gas flow to the ebullated bed, and the concentration of particles in the dispersion can be monitored by optical density measurements prior to injection. Collection of particles is performed by the existing particulate-collection equipment.

he process for preparing the bromine-containing activated carbon sorbent bed, coupled with contacting the bed with the mercury-contaminated flue gas or offgas.

The process for preparing the bromine-containing activated carbonBsorbent, as described in Examples 2 and 4, or untreated activated carbon, coated on a substrate or as activated carbon material. This material is placed in a moving system that geometrically allows for control of rate of exposure, sorption, and exchange of material in a continuous or semicontinuous manner.

In the sorbent and mercury removal process outlined in paragraphs above, the bromine reagents promote metal oxidation activity by creating cationic or radical character on the carbon edge structure that attracts mercury atoms and extracts electrons from said mercury atoms, resulting in oxidized mercury, which is more easily captured on a sorbent. A similar mechanism applies to oxidation and capture of reduced arsenic and other pollutant species.

The invention relates to the process for the removal of mercury and other pollutant species from gas streams generated during the burning of fossil fuels, such as in a coal-fired utility or synthesis gas from gasification facilities.

This removal process would utilize a sorbent and/or a combination of additives to remove pollutants from the gas stream, which are at the same time interacting with other gas components that result in poisoning or deactivating the sorbent and reducing its capacity or reaction rates with the targeted pollutant species. The present invention provides a cost-effective way to capture the pollutants by utilizing exceptionally active carbon sorbents and promoting mercury sorbent surface reactions, containing a bromide form of the carbon, that capture mercury with high kinetic chemisorption (oxidation) activity, so that capture can occur during contact times of seconds or less. The sorbent does not require in situ activation (induction period) in the gas stream to achieve high activity as do conventional activated carbon sorbents. The reactivity of the sorbent toward the pollutants and the sorption capacity can be regenerated, recycled, and reused.

Burning fossil fuels generates a flue gas that contains mercury (and other trace elements) that was in the coal, plus oxides of sulfur and nitrogen (acid gas emissions) and particulates whose release to the environment must be controlled by use of sorbents, scrubbers, filters, precipitators, and other removal technologies. While control of other elements and/or flue gas pollutants may apply, the discussion provided is focused on mercury. Initially, mercury is released in the elemental form during combustion/gasification, but downstream of the boiler, in the ducts and stack of the combustion system, part of the elemental mercury is oxidized. The amount oxidized depends on the amount of acid gases present in the flue gas and other factors. Amounts of mercury vary with the coal, but a typical concentration of mercury in the stream of combustion gas is about 5 parts per billion (ppb). A pound of mercury or more per day may be emitted in some utilities.

Discussion of Sorbent Technologies

Several types of mercury control methods for flue gas have been investigated, including injection of fine sorbent particles into a flue gas duct and passing the flue gas through a sorbent bed. Fine-particle injection sorbents include activated carbon, metal oxide sorbent, sodium sulfide particles (for example, see U.S. Pat. No. 6,214,304), and basic silicate or oxide sorbents (for example, see the Ghorishi reference (Ghorishi, B.; Gullet, B. K. Waste Manage Res. 1993, 16, 582). and Lancia references). When particle injection is employed, the mercury chemisorbed to the sorbent particle is removed from the gas stream in a bag house or ESP and collected along with ash particulates (for example, see U.S. Pat. Nos. 4,889,698, 4,956,162, 5,672,323, 5,827,352, 6,027,551, and 5,505,766). The sulfide and basic silicate and oxide particles are effective only for the oxidized mercury, and the metal oxide sorbents exhibit slower capture kinetics than the carbon particles. Additionally, injection of fine carbon particles into the flue gas stream has been only partially successful in removing mercury, especially elemental mercury, where effective removal of approximately 60% was attained with a baghouse to collect carbon and ash. Even lower removal rates have been observed when using an ESP to collect the carbon, since the contact time of the carbon with the gas is very short.

A major problem with existing carbon injection systems is that the sorbent is initially unreactive, and only after exposure to the flue gas for about 20 minutes does the seasoned sorbent become effective and provide capture of 60% of the mercury in the gas. Consequently, these sorbents must be used in large amounts (high sorbent-to-mercury ratios) to effectively capture the mercury. These sorbents can be relatively expensive and cannot be easily separated from the ash, regenerated and reused. The collection of carbon in the ash also creates solid waste disposal problems, and the spent sorbent may contaminate the collected ash for use in various applications.

Use of Halogens in Mercury Capture

Methodologies for using halogens for the treatment of flue gas have not previously been effective. Halogen is defined as a member of the very active elements comprising Group VII-A of the periodic table. In the molecular elemental halogen form, including $F_2$, $Cl_2$, $Br_2$, and $I_2$, the reaction with elemental mercury is not fast enough to result in the formation of oxidized mercury in a coal combustion flue gas with conventional ash control technology. The atomic elemental halogen form, which includes F atom, Cl atom, Br atom, and I atom, is about a million times more reactive to mercury, but the concentrations of these forms are extremely low, and also, therefore, cannot result in oxidation of mercury in a utility flue gas.

A halide is a compound formed from reaction of a halogen with another element or radical. In general, the halide compounds are normally very much less reactive than the molecular halogens, having expended their high chemical potential in forming the low energy halide. The halide is considered a reduced form and cannot therefore oxidize anything by itself. It is for this reason that it is not obvious that a halide-halogen treated activated carbon would be effective at oxidizing elemental mercury and provide effective capture of elemental mercury. In fact, for tests with salts, analytical data show the addition of bromine to an activated carbon or carbon black or soot does form a compound by reacting with the unsaturated groups on the carbon. By applying x-ray photoelectron spectroscopy, it has been determined that bromine or HBr added to carbon black forms chemical compounds within a carbon structure.

A body of theory has been developed from scientific evidence to explain the nature of the promotion effect of the bromine compounds. This principle is illustrated in FIG. **2**, which in step **1** shows the reaction of the hydrogen bromide with the unsaturated structure of the activated carbon. This may be a carbene species on the edge of the graphene sheets structures of the carbon. Molecular bromine or a bromine compound reacts to form a similar structure, with a positive carbon that is active for oxidizing the mercury.

We now teach that the formation of the new bromide compound with carbon increases the reactivity of the carbon forms toward mercury and other pollutants. The resulting bromide compound is uniquely suited to facilitate oxidation of the mercury. The effectiveness of the oxidation results from the promotion effect of the halide exerted on the developing positive charge on the mercury during the oxidation, known in the chemical art as a specific catalytic effect. Thus, as the mercury electrons are drawn toward the positive carbon, the halide anion electrons are pushing in from the other side, which stabilizes the positive charge developing on the mercury and lowers the energy requirement for the oxidation process. Bromide is especially reactive, owing to the highly polarizable electrons in the outer 4p orbitals of the ion. Thus, adding HBr or $Br_2$ to the carbon forms a similar carbon bromide, in which the positive carbon oxidizes the mercury with the assistance of the bromide ion.

Prior Art Publications

The earliest patents that relate to mercury capture on a sorbent are actually not for flue gas mercury control but for capture of mercury from air or other gas mixtures on a carbon or other sorbent. These patents were based on a model that recognized the affinity of halogens for mercury,

rather than the formation of a reactive carbon. These patents are discussed below according to the type of halogen used for impregnation.

One patent that teaches a halogen impregnation (Stock, U.S. Pat. No. 1,984,164, issued in 1934) describes the use of activated carbon or other solid impregnated with a halogen for removing Hg from air. The impregnation method is not specified. This seems to be the most general claim with respect to halogen impregnation. All the statements and claims appear to refer to halogen or iodine, but the patent does not appear to address bromides or other halides or bromide compounds or even specifically iodide or an iodine compound. The only example in the description is iodine impregnation. The patent also is restricted to air systems and did not pertain to flue gas systems with reactive acid gases. The description did not assume that the iodine formed a reactive carbon species.

Japanese Patent JP 49-43197 describes the treatment of Hg-contaminated electrolysis cell gas using a metal iodide salt on a support. A similar treatment using a resin impregnated with a metal iodide is described in JP 50-6438. These patents do not appear to represent a carbon bromide compound as specified in this patent application.

Another early patent (Hilgen, U.S. Pat. No. 3,849,267, issued in 1974) describes a method for Hg removal from a gas which claims mixing molecular chlorine ($Cl_2$) with the gas to be cleaned and passing it through a nonporous sorbent such as glass wool and NaCl (not carbon). This was evidently not an obvious extension of the Stock patent, since a halogen was introduced as part of the gas phase being cleaned.

A later patent (deJong, et al., U.S. Pat. No. 4,196,173, issued in 1980) describes a method for Hg removal in air which claims using a bed of activated carbon impregnated with halogen-only $Cl_2$ is specified in the other claims and examples, and it is prepared by flowing the $Cl_2$ stream through a carbon bed.

An improved sorbent for mercury in air was patented by Revoir and Jones (U.S. Pat. No. 3,662,523, issued in 1972), in which ICl and $ICl_3$ vapors were impregnated into the activated carbon. No explanation of the increased activity was provided. Since these compounds are interhalogen compounds, the patent did not infringe Stock.

U.S. Pat. No. 5,891,324 describes an activated carbon containing an acid (HCl, $H_2SO_4$, or $H_3PO_4$) for the removal of mercury contained in a liquid phase, such as would occur in a process steam in the oil industry. In this case, the model presented was that mercury is adsorbed from the liquid into the solid carbon phase at relatively low temperatures.

In U.S. Patent Application 2004/0003716, a method is described for removing mercury from a combustion gas. This method employs an exposure of a finely powdered activated carbon to a molecular bromine gas at an elevated temperature or to HBr to produce a sorbent with good mercury removal ability when injected into the flue gas duct. The model for the efficacy of the Nelson sorbent is not clearly stated, so it can be presumed that the reasoning for using bromine is the simple premise that some bromine form will help capture the mercury, as does iodine and chlorine. The methods for incorporation of the bromine in the Nelson application are not the same as with the present invention, and the Nelson method will not produce the identical carbon bromide species that are obtained in the art described in this application. The Nelson method lacks many of the features described in this application that impart exceptional activity to the sorbent in a convenient way, for example, the addition of smaller amount of a second more powerful promoting agent, the use of facile solvent systems, including aqueous bromine, and the use of in-flight bromine treatment. Additionally, the patent application does not mention regeneration, recycling, or reuse, or the use of moving contactors or larger particle size to facilitate sorbent-ash separation.

Embodiments of the Invention

A sorbent that is initially very reactive in oxidizing mercury can be used in very small amounts to achieve high capture efficiencies, thus lowering operation costs and lessening the disposal problem. In addition, further disposal reduction is made possible by recycling and reusing the sorbent that is produced using this technology. The time interval for the mercury and sorbent to interact in a flue gas duct and the subsequent collection of the mercury on the sorbent and ash may be very short—only seconds. This requires the sorbent to have high capacity and be very reactive toward mercury. A sorbent can be utilized in a very finely powdered form (e.g., 1-10 μm) to minimize mass transfer limitations. But, again, the reactivity should be very high to capture all of the mercury encountered by the fine particles. One feature of this invention is the process to prepare a sorbent containing a bromide compound formed on the carbon structure that provides a sorbent that is highly active on initial contact with the mercury contaminated gas stream, which allows for effective capture of the mercury.

One possible way to do this is to chemically combine molecular bromine from solution with activated carbon (edge sites). X-ray photoelectron spectroscopy established that the addition of bromine formed a chemical compound in the carbon structure. Thus, the sorbent does not represent a molecular bromine halogen form but a new chemically modified carbon structure. This may not occur with the less reactive iodine, where an $I_2$—molecular complex can exist on the carbon basal plane. In the bromine case, it is actually the carbon that oxidizes the mercury. Thus, an entirely new model is presented for the reactivity of the bromine-treated carbon with mercury. The reactive carbon form can be generated by the addition of bromine, hydrogen bromide, or combinations of bromine and other elements as described herein. Chlorine treatment resulted in lower-activity carbons because the chloride anion was less effective in promoting the oxidation by stabilizing the developing positive charge on the mercury in the transition state for oxidation. Based on this model, several innovative, inexpensive, activity-enhancing features have been developed.

It has been demonstrated that addition of an optional second component, in addition to the bromine, results in improved reactivity and capacity for the sorbent, exceeding that of both the untreated carbon and the brominated carbon. The second compound comprises either a second halogen or a compound from a second halogen, such as HBr. Thus, in addition to having a reactive carbon form present, the second component generates a Lewis base with greater ability to stabilize the developing positive charge on the mercury. Thus the second component is an element with more polarized electrons (4p and 5p).

Furthermore, we demonstrated that the sorbent can be readily treated with any combination of bromine and the second component in-flight using vapors of these components contacting the very fine carbon particles dispersed in air or other gas stream that conveys the particles to the flue gas duct. There is no particular temperature requirement for this contact. This technology is very simple to implement, so it will result in a great cost savings to the utility using this technology for mercury capture.

A unique, nonobvious technique for preparation of the treated carbon is through combining the treatment system

with the carbon injection system at the end-use site. With this technique, the halogen is introduced to the carbon-air mixture in the transport line (or other part of the sorbent storage and injection system). Benefits over current concepts to treat sorbents off-site include the following:

- Capital equipment costs at a treatment facility are eliminated.
- Costs to operate the treatment facility are eliminated.
- There are no costs for transporting carbon and additive to a treatment facility.
- This process uses existing hardware and operation procedures.
- This technology ensures that the sorbent is always fresh, and thus, more reactive.
- No new handling concerns are introduced.
- There are no costs for removing carbon from treatment system.
- This process allows rapid on-site tailoring of additive-sorbent ratios in order to match the requirements of flue gas changes, such as needed when changing fuels or reducing loads, thus further optimizing the economics.
- This technology reduces the amount of spent sorbents that are disposed.

With the foregoing and other features in view, there is provided, in accordance with the invention, a process for preparing and regenerating carbon sorbents whose activity for mercury capture is promoted by the addition of bromine to the carbon structure.

The invention applies to use of a sorbent in a powdered form that has been injected into a flue gas stream before or after ash particulates have been removed. Examples of the composition of the sorbent are a powdered modified activated carbon prepared by adding $Br_2$ or HBr plus a second optional component. Alternatively, the sorbent is on a moving contactor consisting of particles or fibers containing the compositions listed in the previous sentence. Either type can be regenerated; the poisoning contaminants from the flue gas are removed and an inexpensive promoting agent added to restore mercury sorption activity. This process of promoting the activity of the carbon itself contrasts with the earlier, more expensive art of adding a reagent (such as peroxide, gold, triiodide, etc.) to the sorbent. The activated carbon sorbent treated with bromine and/or the other components is noncorrosive.

Detailed examples of sorbent regeneration techniques are described in co-pending, commonly-owned PCT patent application No. PCT/US04/12828, titled "PROCESS FOR REGENERATING A SPENT SORBENT", which is incorporated by reference herein.

Although the invention is described herein as a sorbent material, it is nevertheless not intended to be limited to the details described, since various modifications and structural changes may be made therein without departing from the spirit of the invention and within the scope and range of equivalents of the claims.

The construction and method of operation of the invention, however, together with additional objects and advantages thereof will be best understood from the following description of specific exemplary embodiments.

FIG. **6** is a block diagram illustrating the use of the invention in a coal fueled facility. Of course, the invention can also be used in any other desired type of facility. FIG. **6** shows a boiler for burning pulverized coal. The facility utilizes various devices to clean the exhaust of the boiler. In this example, a baghouse or ESP is used to collect particulates in the exhaust. A scrubber and sorbent bed are also used to remove undesired constituents from the flue gas stream, before being fed to the stack. In the example shown, the sorbent is injected into the flue gas after the boiler. The additive can be injected where desired (e.g., before, after, or within the boiler).

Another advantage of the present invention relates to the use of a feedback system to more efficiently utilize the invention. Where possible, the mercury control technology of the present invention will utilize measurement of mercury emissions as feedback to assist in control of the sorbent injection rate. Tighter control on the sorbent levels in this way will ensure mercury removal requirements are met with the minimal sorbent requirements and therefore the associated costs will be minimized. In one example, the emissions are measured at the stack.

Carbon Sorbent

Reactions of halogens and acidic species with the basic binding sites on the activated carbon sorbent create sites for oxidizing mercury. Other metal ions, such as boron, tin, arsenic, galium, Sb, Pb, Bi, Cd, Ag, Cu, Zn, or other contaminants, will also react with the oxidation sites generated on the carbon.

According to our model, adding the bromine from the bromine reagent or a proton from a hydrogen halide acid to a basic carbene site on the carbon edge structure forms a carbocation that accept electrons from the neutral mercury atom forming the oxidized mercury species that is bound to the sorbent surface. The reactive site may also generate reactive bromine radicals or carbon radicals at the active sites on the carbon. Thus, the activated carbon serves to stabilize the bromine, yet provides a highly reactive bromine-containing reagent that can oxidize the mercury and promote its capture on the activated carbon. The sorbent that contains bromine is expected to be more reactive than the corresponding sorbent containing chlorine and much less expensive than the sorbent containing iodine.

A bench-scale procedure based on the above description was used to test the initial activities and capacities of several powdered carbon sorbents, including the bromine-containing activated carbons prepared from a commercially available sorbent and an aerogel carbon film sorbent, as well as the original precursor carbons for comparison. Bromine-treated carbons were prepared by impregnation of the powdered activated carbon precursors in a stirred solution of bromine in carbon tetrachloride or methylene chloride, or alternatively, in an aqueous solution of HBr, followed by drying in air at ambient temperature and drying in an oven at 100° C. in air or nitrogen. Bromine-treated carbons were also prepared by impregnating bromine from the gas phase by passing the gas through a rotating dry bed of the activated carbon precursor. Adding a second component to the solution was demonstrated to improve the capacity of the sorbent.

The carbons were initially tested in a heated bed, where a synthetic flue gas stream containing elemental mercury (11 $\mu g/m^3$) was passed through the bed. Concentrations of total and elemental Hg in the effluent gas were determined using a Sir Galahad mercury CEM. The powdered sorbent was supported on a quartz filter during the test, and the other sorbents were tested as a triple layer.

A comparison of the original commercial-grade powdered carbon sorbent with the sorbent after it has been treated with 0.1 N HBr, collecting the powder by centrifugation and drying, revealed that the mercury capture activity is increased from an initial capture efficiency of about 50% of the Hg in the inlet to 100% capture. A comparison of the sorbent after subsequent regeneration with HBr indicates that it not only captures mercury at the same level as before

(100% capture) but is enhanced such that its capacity is prolonged by several minutes. Similar results were obtained with the carbon film and carbon fiber sorbents by treatment with molecular bromine in solution or in dry beds as described above.

An activated carbon sorbent was prepared by treating the carbon by impregnating molecular bromine from a gas composition containing molecular bromine by flowing the gas through a liquid bromine reservoir in series with a fluidized bed of ebullated bed of the carbon. The amount of bromine taken up by the carbon ranges (in one example) from <1 to about 30 g per 100 g of activated carbon, depending on the proportions used.

In one exemplary test conducted at a facility fired with lignite coal, the flue gas phase mercury (elemental) concentration was between 10 and 11 $\mu g/m^3$. The ash and injected carbons were collected in the baghouse at 350E to 375EF. Injection of commercial-grade activated carbon powder (untreated) at a rate of 1.0 lb/Macf resulted in mercury effluent concentrations of 3.8-4.2 $\mu g/m^3$ (representing 62%-58% removal of the mercury from the gas), and at 2.0 lb/Macf, gave 74%-71% removal. Injection of the bromine-treated carbon at 1.0 lb/Macf resulted in 73%-69% removal and at 2.0 lb/Macf gave 86%-84% removal. Thus, a significant increase in the mercury capture was exhibited during use of the bromine-treated carbon.

Addendum: Other References to Hg Sorption

Sorbent Beds with Particulate Removal

Carbon beds have also been utilized for mercury capture in flue gas. The German Patent 34 26 059 describes the use of a very thick carbon bed for treatment of flue gases containing polyhalogenated compounds. Although the system employed at Dusseldorf would also have the potential for Hg removal (for example, see the Streng reference), it is not very practical to use such a thick bed. Spent sorbent is burned and not regenerated. The carbons are not pretreated.

The GE-Mitsui-BF system (Tsuji, K.; Shiraishi, I.; Dague, R. F. Proceedings, Sixth International Symposium, Air & Water Management Assoc., New Orleans, La., Mar. 10-12, 1993) employs a recirculating carbon bed, where mercury is removed along with acid gases (as ammonium salts) and the carbon is regenerated at high temperatures where ammonium sulfate is decomposed to $SO_2$ and $N_2$ and mercury is converted to the elemental form, which desorbs from the sorbent. Attrition of the sorbent results in a significant sorbent cost. The carbons are not pretreated.

Sorbent Injection after Particulate Removal

A process of injecting manganese oxide sorbent particles is described in U.S. Patent Application 2002/0150516. Regeneration is claimed by removal of spent oxide particles from the reaction zone and rinsing with dilute aqueous acid.

Sorbent Beds after Particulate Removal

Of particular interest in designing a mercury control process is to use the sorbent downstream of a particulate control device so the sorbent is not highly diluted with the ash particles. The sorbent could then be more easily regenerated and recycled. The prior art teaches several examples of this type of configuration and sorbent processing.

U.S. Pat. No. 5,607,496 teaches the oxidation of mercury on a metal oxide sorbent bed and subsequent absorption to sorbent. The sorbent bed follows the particulate-removal equipment and, thus, the gas still contains the $SO_x$ and $NO_x$, which react with the metal oxide sorbent to form the metal sulfates, which poison the bed. High temperatures are proposed to regenerate the bed. However, Hg is only partially removed from the sorbent at temperatures up to 500° C. The sorbents do not work effectively after regeneration using this technique; the problem may be that manganese sulfate formed during the sorption cycle does not completely decompose back to an active manganese oxide form.

U.S. Pat. No. 6,383,981 describes a fixed $MnO_2$ or $Fe_2O_3$ bed for removal of Hg from a hydrocarbon stream. No regeneration method appears to be included.

A recent U.S. Patent application (2001/0003116) describes the regeneration of a plate or honeycomb material composed of transition metal oxides that was used for sorption of mercury in flue gas. The claimed process involves heating the sorbent in a reducing gas stream to remove poisons, followed by impregnation with a polyfunctional complex-forming reagent containing the catalyst active component to restore mercury capture capacity. The first of these steps can remove the mercury, but it is unclear whether it actually removes the sulfate poison. The second of these steps is rather expensive, because one is actually reconstituting the reagent on the sorbent

Porous beds containing a mercury oxidizing reagent on a solid support are described in several patents for removal of mercury from gas streams. These include peroxomonosulfate (for example, see U.S. Pat. No. 4,786,483), triiodide or other mixed halogens (for example, see U.S. Pat. Nos. 3,194,629; 3,662,523), or sulfur (for example, see U.S. Pat. Nos. 3,194,629, 4,101,631, 4,708,853, 6,258,334). The reagent material is destroyed either by reaction with the flue gas during sorption or by attempts to regenerate the sorbent; there is no way to regenerate these sorbents, except by reimpregnation of the expensive reagent.

Amalgamating noble metals (gold, silver) on a suitable support can be regenerated by microwave heating (for example, see U.S. Pat. No. 6,136,072), but they are expensive and not especially active for sorption in flue gas.

Hg Sorbents for Air or Natural Gas Treatment

Melkersson (U.S. Pat. No. 3,786,619) described a Hg sorbent comprising $SeO_2$ or $SeS_2$ for air treatment. This method did not appear to employ a carbon support or halide.

Yan (U.S. Pat. No. 4,814,152) described a Hg sorbent comprising elemental sulfur and a metal catalyst on a carbon support. This method did not appear to employ a halide.

Attia (U.S. Patent 65/080,281) described a sorbent for mercury and a variety of other contaminants comprising an inorganic aerogel composition. This method did not appear to employ a carbon support or halide.

FOLLOWING IS A LIST OF VARIOUS BACKGROUND REFERENCES

Lancia, A.; Musmarra, D.; Pepe, F.; Volpicelli, G. *Combust. Sci. & Technol.* 1993, 93, 277.

Streng, S.; Kassebohm, B. *Fuel Proc. Technol.* 1994, 39, 431.

U.S. Pat. No. 6,214,304 Rosenthal
U.S. Pat. No. 4,889,698 Moller
U.S. Pat. No. 4,956,162 Smith
U.S. Pat. No. 5,672,323 Bhat.
U.S. Pat. No. 5,827,352 Altman
U.S. Pat. No. 6,027,551 Hwang
U.S. Pat. No. 5,505,766 Chang
U.S. Pat. No. 5,607,496 Brooks
U.S. Pat. No. 6,383,981 Blankenship
U.S. Pat. No. 4,786,483 Audeh
U.S. Pat. No. 3,194,629 Dreibelbis, et al
U.S. Pat. No. 4,101,631 Ambrsini, et al
U.S. Pat. No. 3,662,523 Revoir
U.S. Pat. No. 4,708,853 Matviya
U.S. Pat. No. 6,258,334 Gadkaree

U.S. Pat. No. 6,136,072 Sjostrom
U.S. Patent Application 2002/0150516
U.S. Patent Application 2001/0003116 Neufert

While the preferred embodiments of the invention have been shown and described, modifications thereof can be made by one skilled in the art without departing from the spirit and teachings of the invention. The embodiments described herein are exemplary only and are not intended to be limiting. Many variations and modifications of the invention disclosed herein are possible and are within the scope of the invention. Accordingly, the scope of protection is not limited by the description set out above, but is only limited by the claims which follow, that scope including all equivalents of the subject matter of the claims.

The examples provided in the disclosure are presented for illustration and explanation purposes only and are not intended to limit the claims or embodiment of this invention. While the preferred embodiments of the invention have been shown and described, modifications thereof can be made by one skilled in the art without departing from the spirit and teachings of the invention. Process criteria, equipment, and the like for any given implementation of the invention will be readily ascertainable to one of skill in the art based upon the disclosure herein. The embodiments described herein are exemplary only and are not intended to be limiting. Many variations and modifications of the invention disclosed herein are possible and are within the scope of the invention. Use of the term "optionally" with respect to any element of the invention is intended to mean that the subject element is required, or alternatively, is not required. Both alternatives are intended to be within the scope of the invention.

The discussion of a reference in the Background is not an admission that it is prior art to the present invention, especially any reference that may have a publication date after the priority date of this application. The disclosures of all patents, patent applications, and publications cited herein are hereby incorporated herein by reference in their entirety, to the extent that they provide exemplary, procedural, or other details supplementary to those set forth herein.

Although the invention is described herein as a promoted sorbent material and associated processes for its preparation and use, it is nevertheless not intended to be limited to the details described, since various modifications and structural changes may be made therein without departing from the spirit of the invention and within the scope and range of equivalents of the claims.

What is claimed is:

**1**. A method of separating mercury from a mercury-containing gas, the method comprising:

combusting coal in a combustion chamber, to provide the mercury-containing gas, wherein the mercury-containing gas comprises a halogen or halide promoter comprising HBr, $Br^-$, or a combination thereof, wherein

the coal comprises added $Br_2$, HBr, $Br^-$, or a combination thereof, added to the coal upstream of the combustion chamber, or

the combustion chamber comprises added $Br_2$, HBr, $Br^-$, or a combination thereof, or

a combination thereof;

injecting a sorbent material comprising activated carbon into the mercury-containing gas downstream of the combustion chamber;

contacting mercury in the mercury-containing gas with the sorbent, to form a mercury/sorbent composition;

separating the mercury/sorbent composition from the mercury-containing gas, to form a cleaned gas;

monitoring the mercury content of the cleaned gas; and

controlling, in response to the monitored mercury content of the cleaned gas, an injection rate of injecting the sorbent into the mercury-containing gas, the sorbent composition, or a combination thereof, so that the mercury content of the cleaned gas is maintained at or below a desired level.

**2**. The method of claim **1**, comprising removing greater than 70 wt % of the mercury in the mercury-containing gas.

**3**. The method of claim **1**, comprising removing greater than 70 wt % of the mercury in the mercury-containing gas on the sorbent.

**4**. The method of claim **1**, wherein the sorbent in the mercury-containing gas comprises about 1 g to about 30 g of the halogen or halide promoter per 100 g of the sorbent material.

**5**. The method of claim **1**, wherein the combustion chamber comprises the halogen or halide promoter.

**6**. The method of claim **1**, wherein the coal comprises added $Br_2$, HBr, $Br^-$, or a combination thereof, added to the coal upstream of the combustion chamber.

**7**. The method of claim **1**, wherein the promoter is contacted with the sorbent in vapor form, gaseous form, liquid form, or in an organic solvent.

**8**. The method of claim **1**, further comprising injecting a secondary material into the mercury-containing gas downstream of the combustion chamber.

**9**. The method of claim **8**, wherein the secondary material comprises a halogen, a compound derived from a halogen, a hydrohalide, a compound comprising a Group V or Group VI element and a molecular halogen, or a combination thereof.

**10**. The method of claim **1**, wherein the sorbent material injected into the mercury-containing gas further comprises a non-carbon sorbent material.

**11**. The method of claim **10**, wherein the non-carbon sorbent material comprises at least one of a porous felsic material, a vesicular felsic material, a porous basaltic material, a vesicular basaltic material, a clay-based compound, an alkaline compound, a calcium hydroxide compound, a sodium acetate compound, and a bicarbonate compound.

**12**. The method of claim **1**, wherein the activated carbon comprises powdered activated carbon, granular activated carbon, or a combination thereof.

**13**. The method of claim **1**, wherein the sorbent material injected into the mercury-containing gas is substantially free of halogen and halide promotion.

**14**. The method of claim **1**, wherein the sorbent material injected into the mercury-containing gas is a promoted sorbent obtained by contacting a base sorbent with another halogen or halide promoter.

**15**. The method of claim **1**, wherein the combustion chamber comprises a boiler.

**16**. The method of claim **1**, wherein the mercury-containing gas is a flue gas.

**17**. The method of claim **1**, wherein the injection of the sorbent material into the mercury-containing gas occurs upstream of an air pre-heater.

**18**. The method of claim **1**, wherein the injection of the sorbent material into the mercury-containing gas occurs upstream of a particulate separator or a scrubber.

**19**. The method of claim **1**, wherein the coal comprises added halide sorbent enhancement additive.

**20**. The method of claim **1**, wherein the combustion chamber comprises added $Br_2$, HBr, $Br^-$, or a combination thereof.

**21**. The method of claim **1**, wherein the coal comprises added sorbent enhancement additive that comprises $Br^-$.

**22**. The method of claim **21**, wherein the sorbent enhancement additive comprises a bromide compound.

**23**. A method of separating mercury from a mercury-containing gas, the method comprising:

combusting coal in a combustion chamber, to provide the mercury-containing gas, wherein the mercury-containing gas comprises a halogen or halide promoter comprising HBr, $Br^-$, or a combination thereof, wherein

the coal comprises added $Br_2$, HBr, $Br^-$, or a combination thereof, added to the coal upstream of the combustion chamber, or

the combustion chamber comprises added $Br_2$, HBr, $Br^-$, or a combination thereof, or

a combination thereof;

injecting a sorbent material comprising activated carbon into the mercury-containing gas downstream of the combustion chamber;

contacting mercury in the mercury-containing gas with the sorbent, to form a mercury/sorbent composition; and

separating the mercury/sorbent composition from the mercury-containing gas, to form a cleaned gas.

**24**. A method of separating mercury from a mercury-containing gas, the method comprising:

combusting coal in a combustion chamber, to provide the mercury-containing gas, wherein the mercury-containing gas comprises a halogen or halide promoter comprising HBr, $Br^-$, or a combination thereof, wherein

the coal comprises added $Br_2$, HBr, $Br^-$, or a combination thereof, added to the coal upstream of the combustion chamber, or

the combustion chamber comprises added $Br_2$, HBr, $Br^-$, or a combination thereof, or

a combination thereof;

injecting a sorbent material comprising activated carbon into the mercury-containing gas downstream of the combustion chamber such that the activated carbon reacts with the halogen or halide promoter in the mercury-containing gas to form a promoted sorbent;

contacting mercury in the mercury-containing gas with the promoted sorbent, to form a mercury/sorbent composition;

separating the mercury/sorbent composition from the mercury-containing gas, to form a cleaned gas;

monitoring the mercury content of the cleaned gas; and

controlling, in response to the mercury content of the cleaned gas,

an injection rate of injecting the sorbent into the mercury-containing gas,

a rate of addition to the coal or the combustion chamber of the added $Br_2$, HBr, the bromide compound, or a combination thereof, or

a combination thereof,

so that the mercury content of the cleaned gas is maintained at or below a desired level.

**25**. A method of separating mercury from a mercury-containing gas, the method comprising:

combusting coal in a combustion chamber, to provide the mercury-containing gas, wherein

the coal comprises added $Br_2$, HBr, a bromide compound, or a combination thereof, added to the coal upstream of the combustion chamber, or

the combustion chamber comprises added $Br_2$, HBr, a bromide compound, or a combination thereof, or

a combination thereof,

injecting a sorbent material comprising activated carbon into the mercury-containing gas downstream of the combustion chamber;

contacting mercury in the mercury-containing gas with the sorbent, to form a mercury/sorbent composition; and

separating the mercury/sorbent composition from the mercury-containing gas, to form a cleaned gas.

**26**. The method of claim **25**, wherein the coal comprises the added $Br_2$, HBr, the bromide compound, or a combination thereof, added to the coal upstream of the combustion chamber.

**27**. The method of claim **25**, wherein the combustion chamber comprises the added $Br_2$, HBr, the bromide compound, or a combination thereof.

**28**. The method of claim **25**, further comprising

monitoring the mercury content of the cleaned gas; and

controlling, in response to the mercury content of the cleaned gas,

an injection rate of injecting the sorbent into the mercury-containing gas,

a rate of addition to the coal or the combustion chamber of the added $Br_2$, HBr, the bromide compound, or a combination thereof, or

a combination thereof,

so that the mercury content of the cleaned gas is maintained at or below a desired level.

**29**. The method of claim **25**, wherein the mercury-containing gas comprises about 1 g to about 30 g of the element bromine per 100 g of the sorbent.

**30**. The method of claim **25**, wherein the mercury/sorbent composition comprises the element bromine, the sorbent material, and mercury.

* * * * *

# *Exhibit B*

US008168147B2

(12) **United States Patent**
**Olson et al.**

(10) **Patent No.: US 8,168,147 B2**
(45) **Date of Patent: May 1, 2012**

(54) **SORBENTS FOR THE OXIDATION AND REMOVAL OF MERCURY**

(75) Inventors: **Edwin S. Olson**, Grand Forks, ND (US); **Michael J. Holmes**, Thompson, ND (US); **John H. Pavlish**, East Grand Forks, MN (US)

(73) Assignee: **Energy & Environmental Research Center Foundation**, Grand Forks, ND (US)

( * ) Notice: Subject to any disclaimer, the term of this patent is extended or adjusted under 35 U.S.C. 154(b) by 0 days.

(21) Appl. No.: **12/419,219**

(22) Filed: **Apr. 6, 2009**

(65) **Prior Publication Data**

US 2010/0047146 A1 Feb. 25, 2010

**Related U.S. Application Data**

(60) Continuation of application No. 12/201,595, filed on Aug. 29, 2008, which is a division of application No. 11/209,163, filed on Aug. 22, 2005, now Pat. No. 7,435,286.

(60) Provisional application No. 60/605,640, filed on Aug. 30, 2004.

(51) **Int. Cl.**
***B01D 53/02*** (2006.01)

(52) **U.S. Cl.** ..... **423/210**; 95/134; 95/901; 423/103; 502/416; 502/417

(58) **Field of Classification Search** ..... 110/345; 423/210; 95/134, 142
See application file for complete search history.

(56) **References Cited**

U.S. PATENT DOCUMENTS

| | | | |
|---|---|---|---|
| 1,984,164 | A | 12/1934 | Stock |
| 3,194,629 | A | 7/1965 | Dreibelbis et al. |
| 3,662,523 | A | 5/1972 | Revoir |
| 3,786,619 | A | 1/1974 | Melkersson |
| 3,826,618 | A | 7/1974 | Capuano |
| 3,849,267 | A | 11/1974 | Hilgen |
| 4,101,631 | A | 7/1978 | Ambrsini et al. |
| 4,196,173 | A | 4/1980 | Delong et al. |
| 4,500,327 | A | 2/1985 | Nishino et al. |

(Continued)

FOREIGN PATENT DOCUMENTS

| | | |
|---|---|---|
| CA | 1099490 | 4/1981 |

(Continued)

OTHER PUBLICATIONS

Dunham, G.E. et al., *Mercury Capture by an Activated Carbon in a Fixed-Bed Bench-Scale System*, Environmental Progress vol. 17, No. 3, pp. 203-208.

(Continued)

*Primary Examiner* — Duane Smith
*Assistant Examiner* — Amber Orlando
(74) *Attorney, Agent, or Firm* — Schwegman, Lundberg & Woessner, P.A.

(57) **ABSTRACT**

A promoted activated carbon sorbent is described that is highly effective for the removal of mercury from flue gas streams. The sorbent comprises a new modified carbon form containing reactive forms of halogen and halides. Optional components may be added to increase reactivity and mercury capacity. These may be added directly with the sorbent, or to the flue gas to enhance sorbent performance and/or mercury capture. Mercury removal efficiencies obtained exceed conventional methods. The sorbent can be regenerated and reused. Sorbent treatment and preparation methods are also described. New methods for in-flight preparation, introduction, and control of the active sorbent into the mercury contaminated gas stream are described.

**25 Claims, 10 Drawing Sheets**

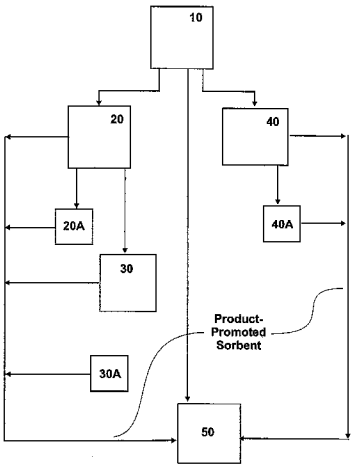

U.S. PATENT DOCUMENTS

| | | | | |
|---|---|---|---|---|
| 4,708,853 | A | 11/1987 | Matviya | |
| 4,786,483 | A | 11/1988 | Audeh | |
| 4,814,152 | A | 3/1989 | Yan | |
| 4,820,318 | A | 4/1989 | Chang et al. | |
| 4,889,698 | A | 12/1989 | Moller | |
| 4,956,162 | A | 9/1990 | Smith | |
| 5,300,137 | A | 4/1994 | Weyand et al. | |
| 5,409,522 | A | 4/1995 | Durham et al. | |
| 5,505,766 | A | 4/1996 | Chang | |
| 5,575,982 | A | 11/1996 | Reiss et al. | |
| 5,607,496 | A | 3/1997 | Brooks | |
| 5,672,323 | A | 9/1997 | Bhat | |
| 5,695,726 | A | 12/1997 | Lerner | |
| 5,827,352 | A | 10/1998 | Altman et al. | |
| 5,891,324 | A | 4/1999 | Ohtsuka | |
| 6,027,551 | A | 2/2000 | Hwang | |
| 6,080,281 | A | 6/2000 | Attia | |
| 6,136,072 | A | 10/2000 | Sjostrom | |
| 6,136,749 | A * | 10/2000 | Gadkaree et al. | 502/183 |
| 6,214,304 | B1 | 4/2001 | Rosenthal | |
| 6,258,334 | B1 | 7/2001 | Gadkaree | |
| 6,372,187 | B1 | 4/2002 | Madden et al. | |
| 6,375,909 | B1 | 4/2002 | Dangtran et al. | |
| 6,383,981 | B1 | 5/2002 | Blankenship | |
| 6,471,936 | B1 * | 10/2002 | Chen et al. | 423/658.2 |
| 6,528,030 | B2 | 3/2003 | Madden et al. | |
| 6,818,043 | B1 | 11/2004 | Chang et al. | |
| 6,848,374 | B2 | 2/2005 | Srinivasachar et al. | |
| 6,878,358 | B2 | 4/2005 | Vosteen et al. | |
| 6,942,840 | B1 | 9/2005 | Broderick | |
| 6,953,494 | B2 | 10/2005 | Nelson, Jr. | |
| 7,435,286 | B2 | 10/2008 | Olson et al. | |
| 7,514,052 | B2 | 4/2009 | Lissianski et al. | |
| 2001/0002387 | A1 | 5/2001 | Tsutsumi et al. | |
| 2001/0003116 | A1 | 6/2001 | Neufert | |
| 2002/0134242 | A1 * | 9/2002 | Yang et al. | 95/107 |
| 2002/0150516 | A1 | 10/2002 | Pahlman et al. | |
| 2003/0136509 | A1 * | 7/2003 | Virtanen | 156/310 |
| 2004/0003716 | A1 | 1/2004 | Nelson, Jr. | |
| 2004/0013589 | A1 | 1/2004 | Vosteen et al. | |
| 2005/0019240 | A1 | 1/2005 | Lu et al. | |
| 2006/0048646 | A1 | 3/2006 | Olson et al. | |

FOREIGN PATENT DOCUMENTS

| | | |
|---|---|---|
| CA | 2150529 | 12/1995 |
| CA | 2400898 | 8/2001 |
| DE | 3426059 | 1/1986 |
| DE | 10233173 | 3/2006 |
| EP | 0208490 A1 | 1/1987 |
| JP | 49-53593 | 5/1974 |
| JP | 49-43197 | 11/1974 |
| JP | 50-6438 | 3/1975 |
| WO | 01/62368 | 8/2001 |

OTHER PUBLICATIONS

Felsvang, K. et al., *Mercury Reduction and Control Options*, The U.S. EPA-DOE-EORI Combined Power Plant Air Pollutant Control Symposium: The Mega Symposium and The A&WMA Specialty Conference on Mercury Emissions: Fate, Effects and Control. Aug. 20-23, 2001, Chicago, Illinois, pp. 1-19.

Ghorishi, B; Guller, B.K., *Sorption of Mercury Species by Activated Carbons and Calcium-Bases Sorbents: Effect of Temperature, Mercury Concenitration and Acid Gases, Waste Manage*. Res. 1998, 16, 6 582-593.

Lancia, A.; Musmarra, D.; Pepe, F.; Volpicelli, G., *Adsorption of Mercuric Chloride Vapours from Incinerator Flue Gases on Calcium Hydroxide Particles*, Combust. Sci. & Technol. 1993, 93, 277.

Olson, D.G.; et al., *The Reduction of Gas Phase Air Toxics from Combustion and Incineration Sources using the MET-Mitsui-BF Activated Coke Process*, Fuel Processing Technology, 65-66 (2000) 393-405.

B. Vosteen et al.,*Chlor-und Bromgestiitzte Hg-Sorption an Elektrofilter-Flugaschen eines kohlegefeuerten Schmelzkammerkessels und an Zementrohmehl*, Matin-Luther-Universität Halle-Wittenberg, Sep. 2003, pp. 1-30.

Canadian Application Serial No. 2,584,327, Office Action mailed Mar. 3, 2009. 4 pgs.

* cited by examiner

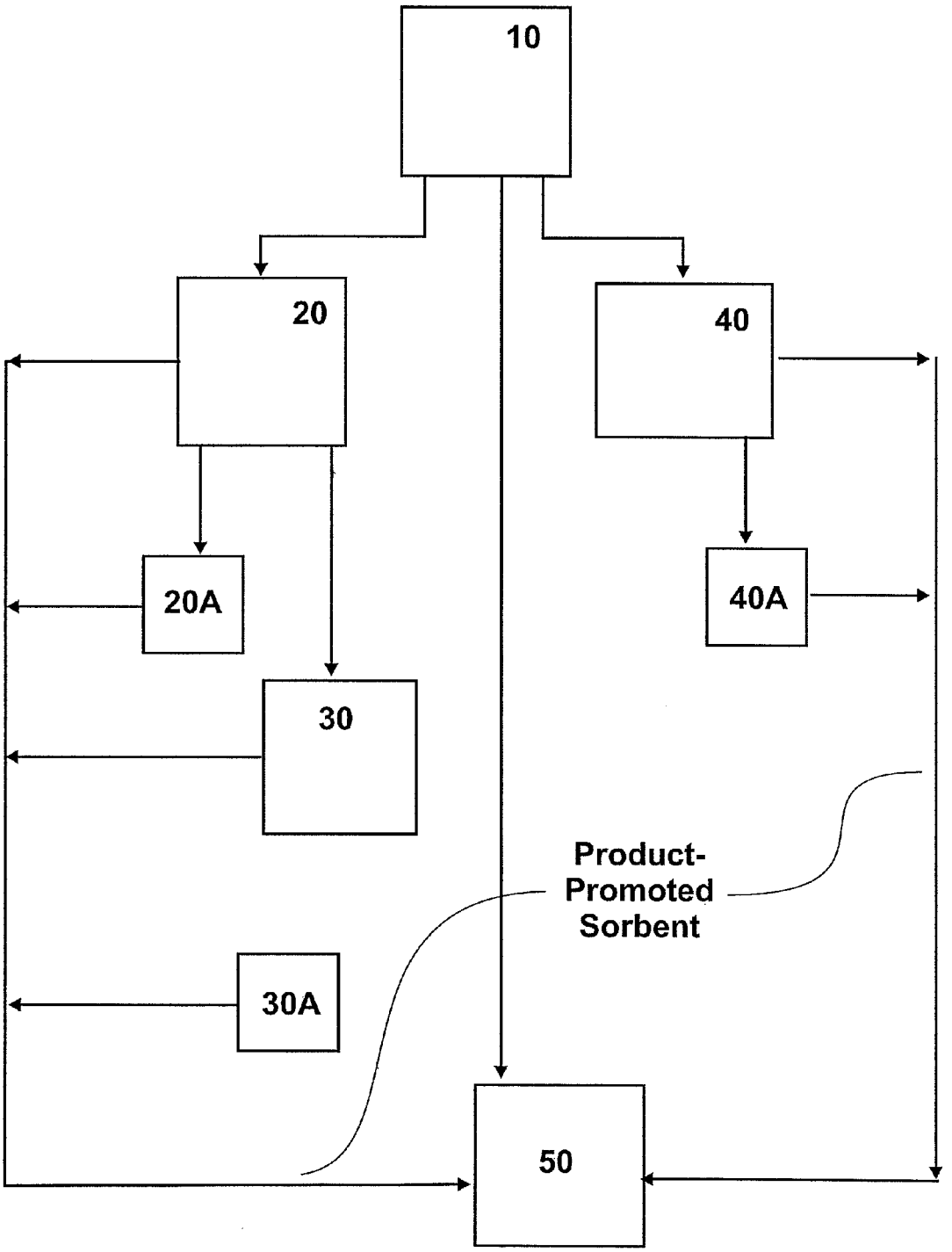


FIG. 1

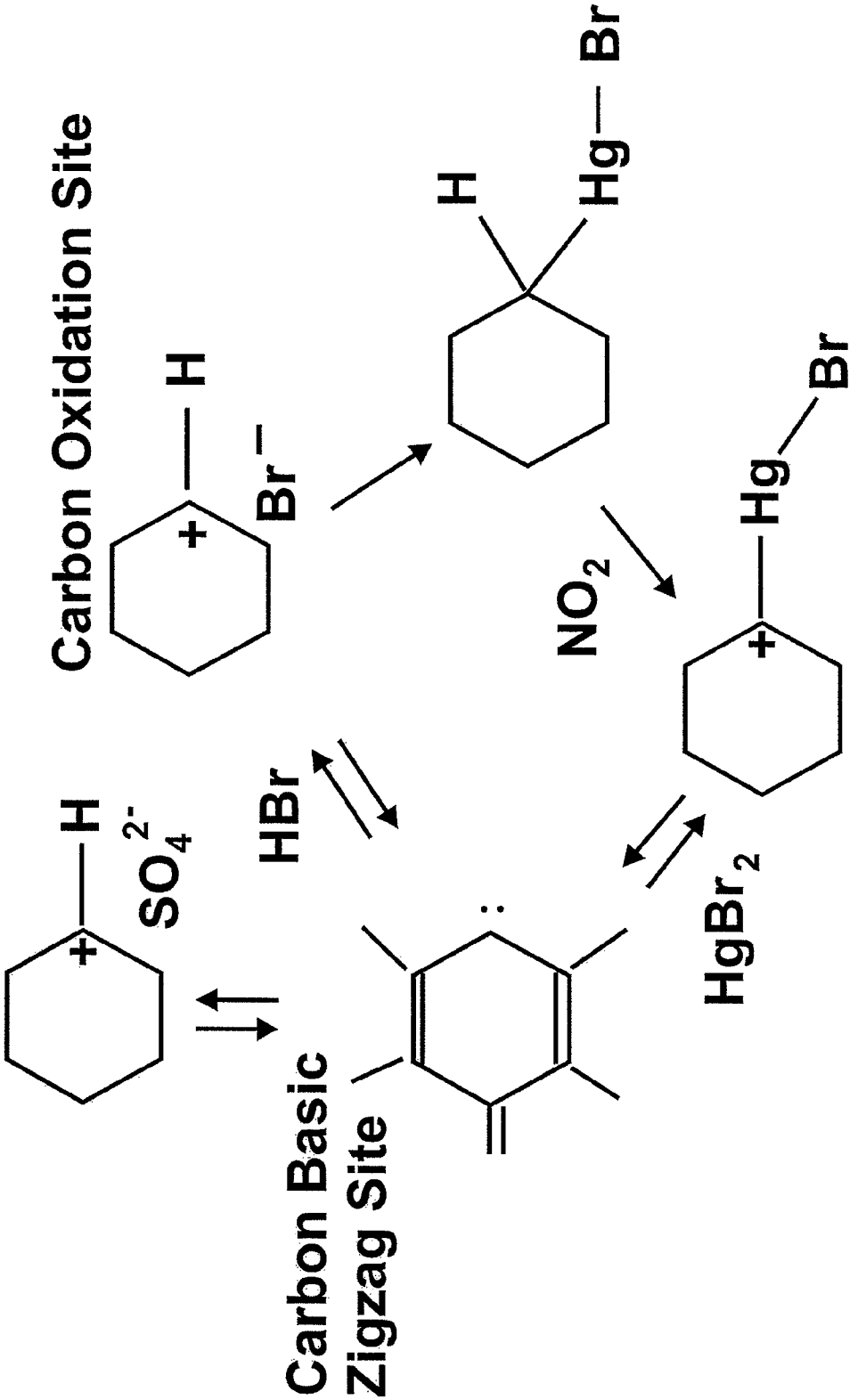
Carbon Oxidation Site
H
Br⁻
H
Hg—Br
NO2
Hg
Br
HgBr2
HBr
H
SO4 2-
Carbon Basic
Zigzag Site

FIG. 2

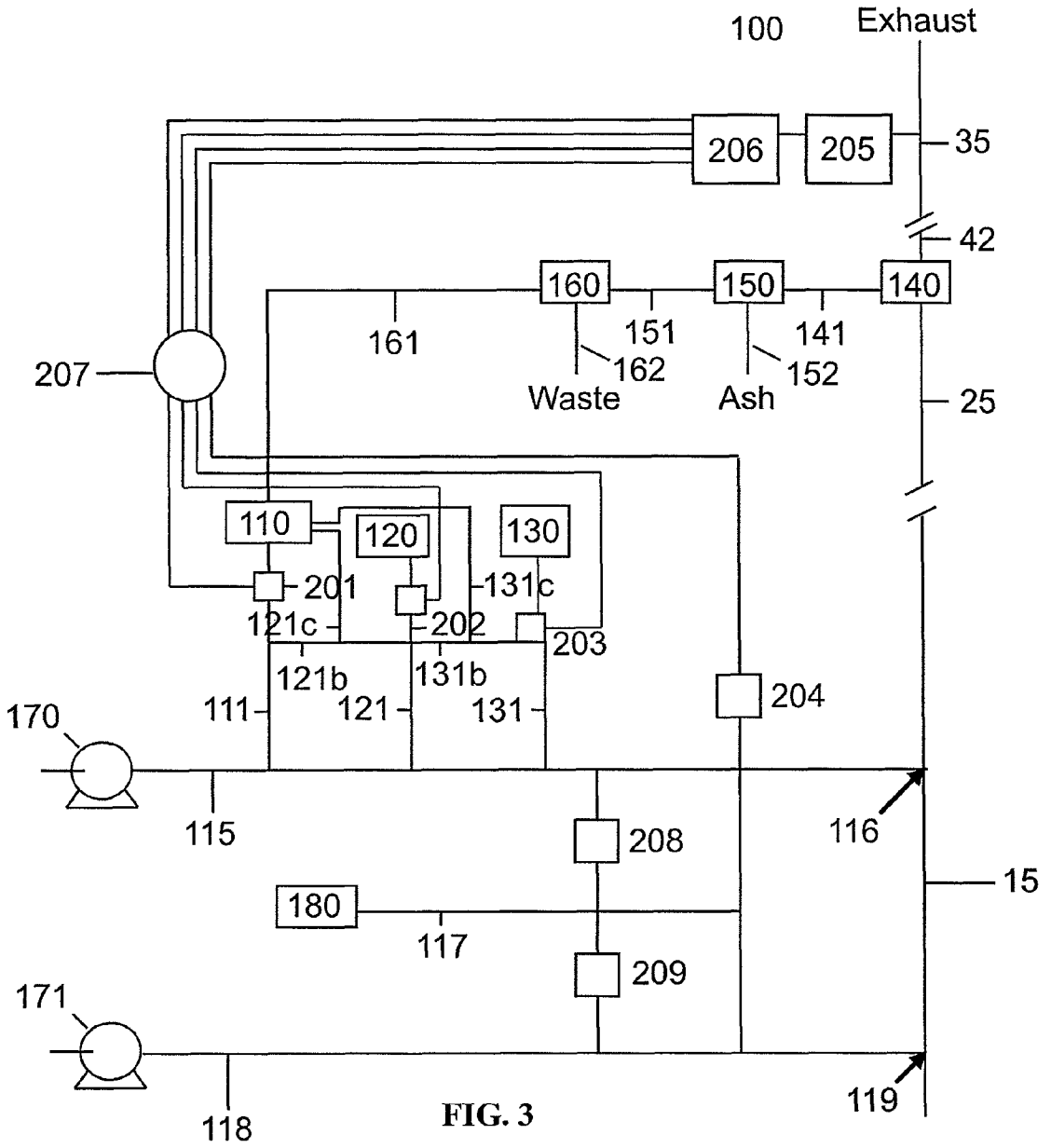
100
Exhaust
206
205
35
42
160
150
140
161
151
141
162
152
Waste
Ash
207
25
110
120
130
201
131c
121c
202
203
121b
131b
204
170
111
121
131
115
208
116
15
180
117
209
171
118
119

FIG. 3

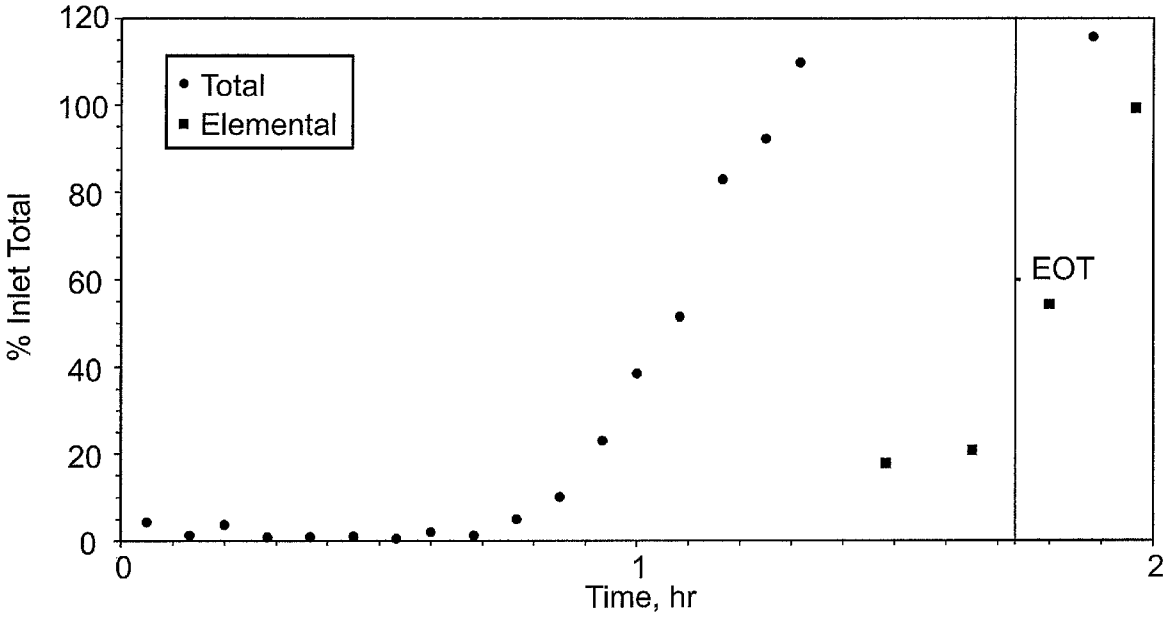
120
100
80
60
40
20
0
% Inlet Total
Total
Elemental
EOT
0
1
2
Time, hr

FIG. 4

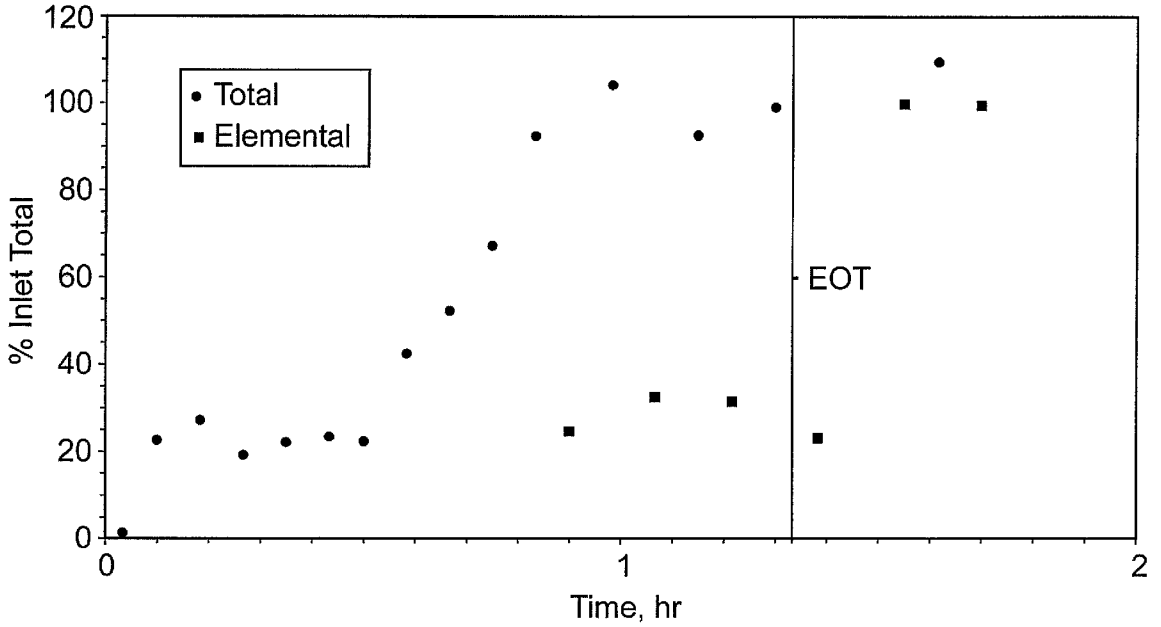
120
100
80
60
40
20
0
% Inlet Total
Total
Elemental
EOT
0
1
2
Time, hr

FIG. 5

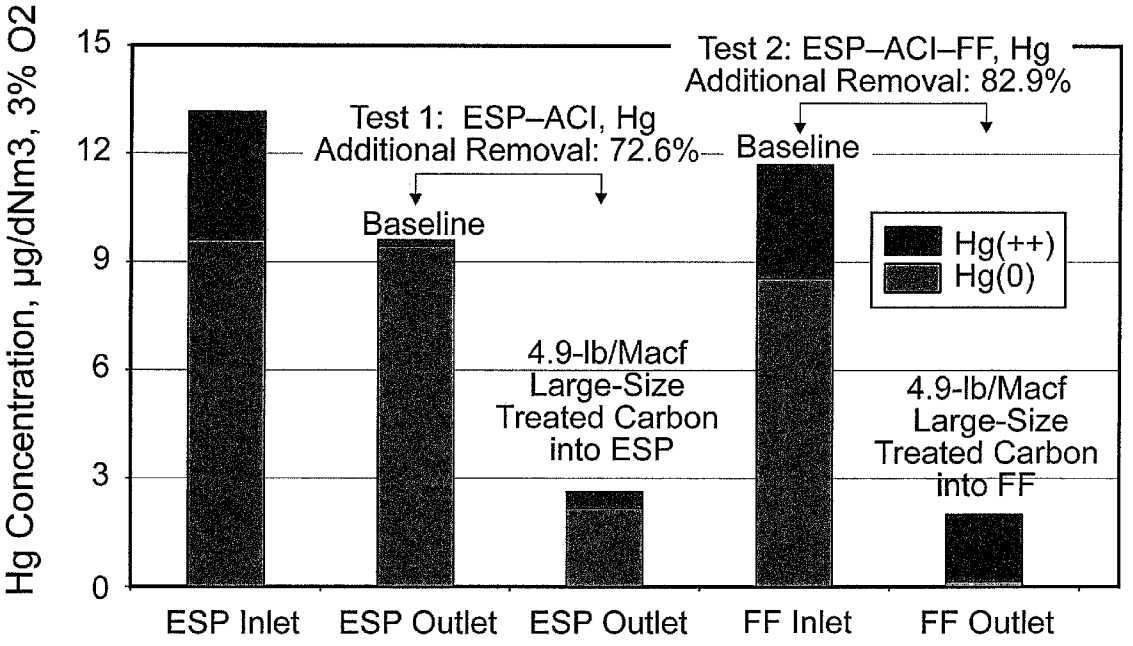
Hg Concentration, µg/dNm3, 3% O2
15
12
9
6
3
0
Test 2: ESP–ACI–FF, Hg
Additional Removal: 82.9%
Test 1: ESP–ACI, Hg
Additional Removal: 72.6%
Baseline
Baseline
Hg(++)
Hg(0)
4.9-lb/Macf
Large-Size
Treated Carbon
into ESP
4.9-lb/Macf
Large-Size
Treated Carbon
into FF
ESP Inlet
ESP Outlet
ESP Outlet
FF Inlet
FF Outlet

FIG. 6

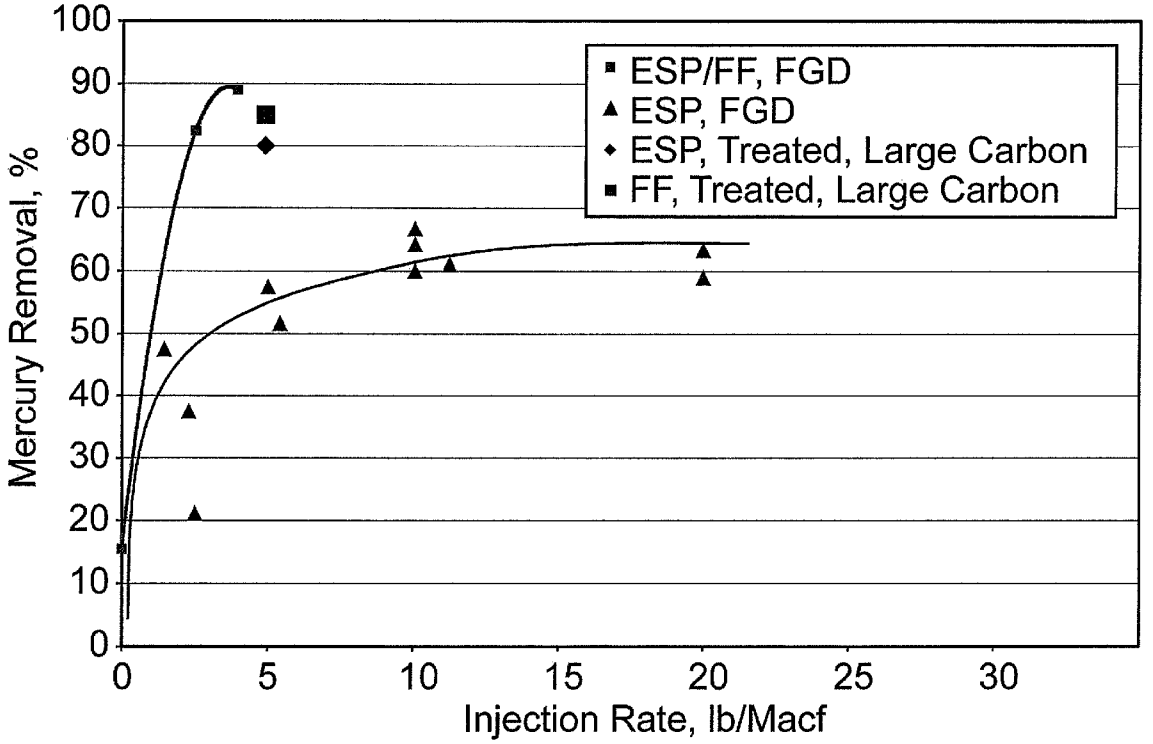
ESP/FF, FGD
ESP, FGD
ESP, Treated, Large Carbon
FF, Treated, Large Carbon
Mercury Removal, %
100
90
80
70
60
50
40
30
20
10
0
0
5
10
15
20
25
30
Injection Rate, lb/Macf

FIG. 7

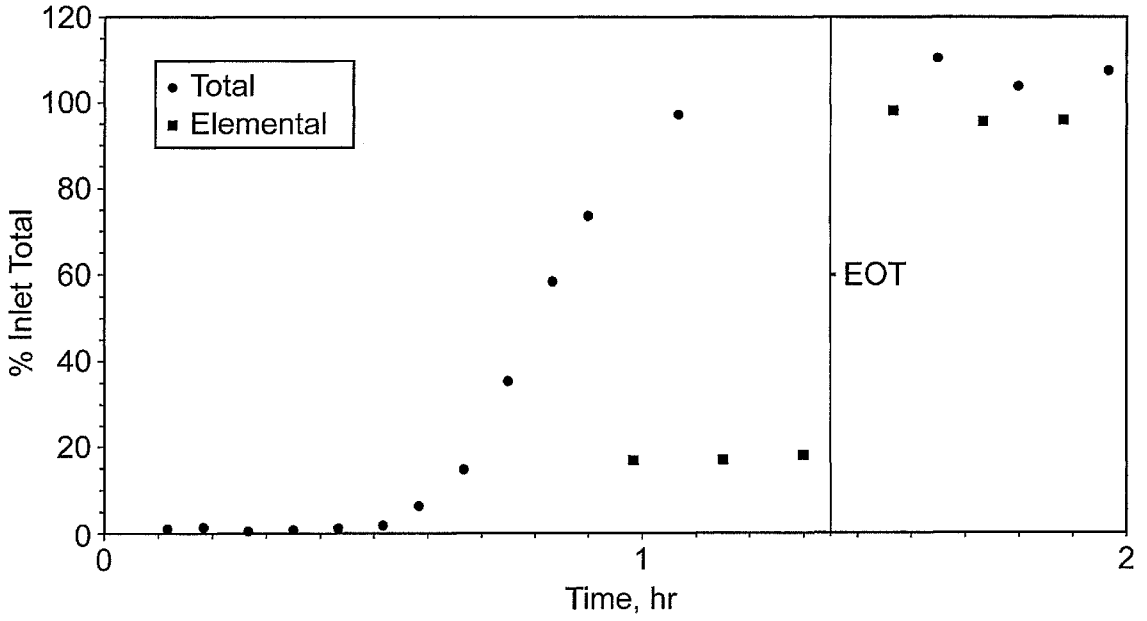
120
100
80
60
40
20
0
% Inlet Total
Total
Elemental
EOT
0
1
2
Time, hr

FIG. 8

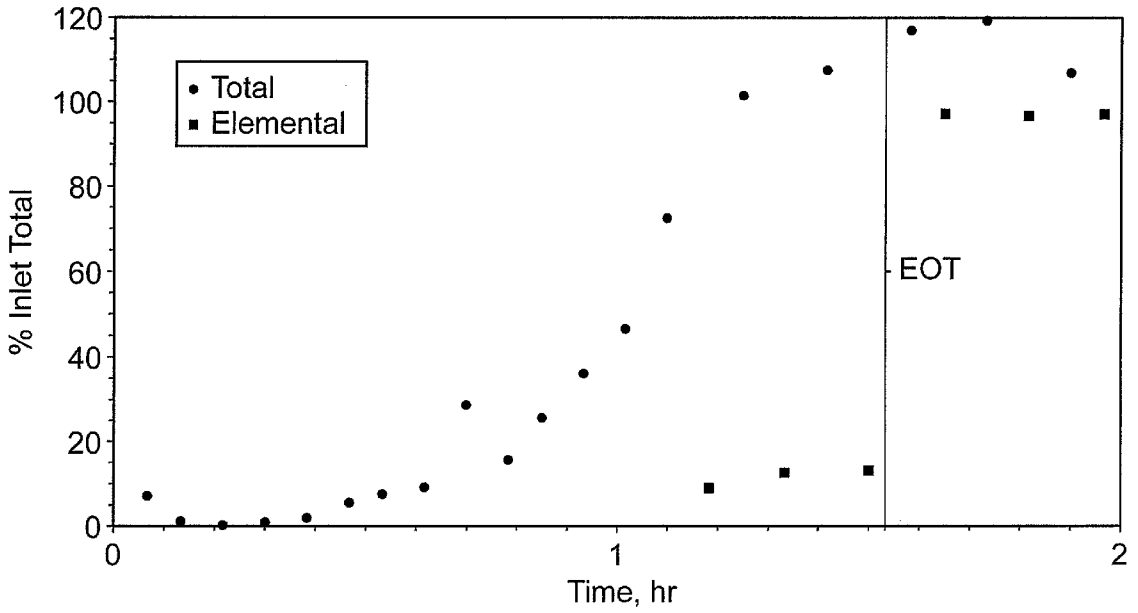
120
100
80
60
40
20
0
% Inlet Total
Total
Elemental
EOT
0
1
2
Time, hr

FIG. 9

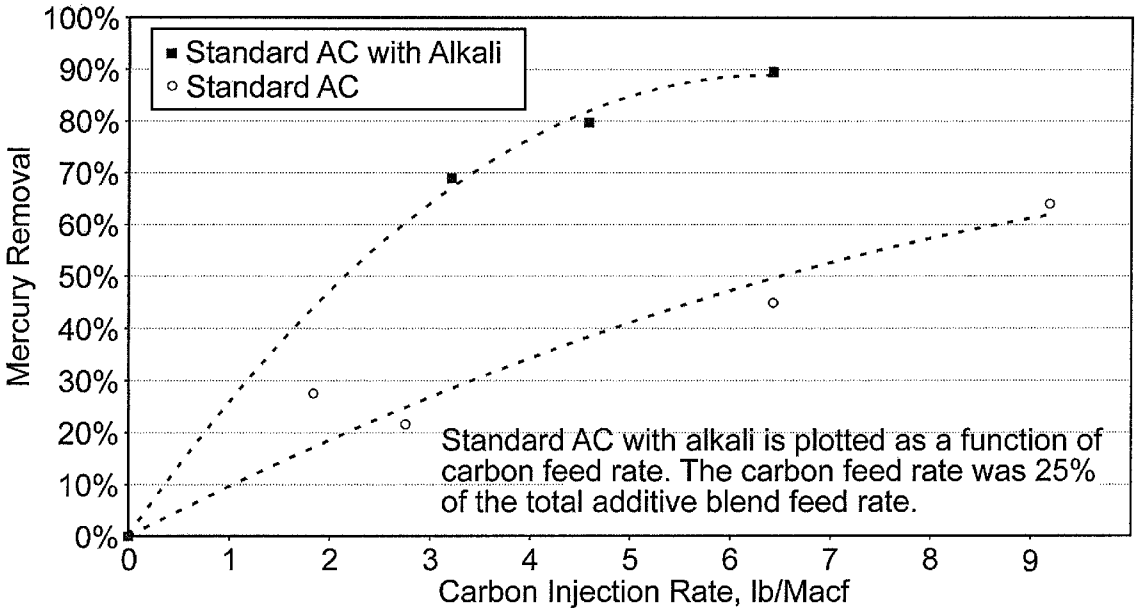
Standard AC with Alkali
Standard AC
Mercury Removal
100%
90%
80%
70%
60%
50%
40%
30%
20%
10%
0%
0
1
2
3
4
5
6
7
8
9
Carbon Injection Rate, lb/Macf
Standard AC with alkali is plotted as a function of carbon feed rate. The carbon feed rate was 25% of the total additive blend feed rate.

FIG. 10

# SORBENTS FOR THE OXIDATION AND REMOVAL OF MERCURY

## CROSS-REFERENCE TO RELATED APPLICATIONS

This application is a continuation of U.S. patent application Ser. No. 12/201,595 filed on Aug. 29, 2008, which is a division of U.S. patent application Ser. No. 11/209,163, filed on Aug. 22, 2005 (now U.S. Pat. No. 7,435,286), which claims priority to the extent appropriate from provisional application 60/605,640, filed on Aug. 30, 2004. Application Ser. Nos. 12/201,595; 11/209,163; and 60/605,640 are incorporated herein by reference.

## STATEMENT REGARDING FEDERALLY SPONSORED RESEARCH OR DEVELOPMENT

This invention was made with United States Government support under Grant Numbers R 827649-01 and CR 830929-01 awarded by the United States Environmental Protection Agency and under Contract Number DE-FC26-98FT40320 awarded by the United States Department of Energy. The United States Government has certain rights in this invention.

## BACKGROUND OF THE INVENTION

1. Technical Field of the Invention

The present invention relates to methods and materials for the removal of pollutants from flue gas or product gas from a gasification system. In particular, mercury is removed from gas streams generated during the burning or gasification of fossil fuels by highly reactive regenerable sorbents.

2. Background of the Invention

The combustion and gasification of fossil fuel such as coal generates flue gas that contains mercury and other trace elements that originate from the fuel. The release of the mercury (and other pollutants) to the environment must be controlled by use of sorbents, scrubbers, filters, precipitators, and other removal technologies. Mercury is initially present in the elemental form during combustion and gasification. In downstream process sections, such as in the ducts and stack of a combustion system, some of the elemental mercury is oxidized. The amount that is oxidized depends on the amount of acid gases present in the flue gas and other factors. Amounts of mercury vary with the fuel, but concentrations of mercury in the stream of flue gas from coal combustion are typically less than 5 parts per billion (ppb). Large coal combustion facilities such as electric utilities may emit a pound of mercury, or more, per day. Mercury removal applications include, without limitation, flue gas from coal (or other fossil fuel) combustion, waste incineration, product gas from gasification, as well as off gases from mineral processing, metal refining, retorting, cement manufacturing, chloralkali plants, dental facilities, and crematories.

Mercury Sorbent Technologies

Several types of mercury control methods for flue gas have been investigated, including injection of fine sorbent particles into a flue gas duct and passing the flue gas through a sorbent bed. Fine-particle injection sorbents include activated carbon, metal oxide sorbent, sodium sulfide particles, and basic silicate or oxide sorbents. When particle injection is employed, the mercury captured on the sorbent particles is removed from the gas stream in a bag house or electrostatic precipitator (ESP) and collected along with ash particulate. The sulfide and basic silicate and oxide particles are effective only for the oxidized mercury, and the metal oxide sorbents



exhibit slower capture kinetics than the carbon particles. Additionally, injection of fine carbon particles into the flue gas stream has been only partially successful in removing mercury, especially elemental mercury, where effective removal of only about 60% is attained for some applications with a FF (fabric filter) to collect carbon and ash. Even lower removal rates have been observed when using an ESP to collect the carbon because the contact time of the carbon with the gas is very short.

A major problem with existing carbon injection systems is that the sorbent is initially unreactive, and only after extended exposure to the flue gas does the sorbent become effectively seasoned and provide increased reactivity with the mercury in the gas. Consequently, these sorbents must be used in large amounts, at high sorbent-to-mercury ratios, to effectively capture the mercury. These sorbents tend to be relatively expensive and cannot be easily separated from the ash for regeneration and reuse. The collection of carbon in the ash also creates solid waste disposal problems, and the spent sorbent may contaminate the collected ash, preventing its use in various applications.

Accordingly, there remains a need for more economical and effective mercury removal technology. This invention provides for cost-effective removal of pollutants including mercury, using sorbent enhancement additives and/or highly reactive sorbents, with contact times of seconds (or less), and that may be regenerated and reused.

## SUMMARY

It is thus an object of the present invention to overcome the deficiencies of the prior art and thereby to provide new and economical methods for the removal of mercury from the gases produced in the utilization of fossil fuels.

A halogen/halide promoted activated carbon sorbent is described that is highly effective for the removal of mercury from flue gas streams. The sorbent comprises a new halide-modified carbon form containing a reactive compound produced by the reaction of bromine (or halide or other halogen) with the carbon. Optional secondary components and alkali may be added to further increase reactivity and mercury capacity. Mercury removal efficiencies obtained exceed or match conventional methods with added benefits such as reduced costs. Optionally, the sorbent can be regenerated and reused. Sorbent treatment and/or preparation methods are also described. New methods for in-flight preparation, introduction, and control of the active sorbent into the mercury contaminated gas stream are described.

In some embodiments, a promoted carbon sorbent is provided comprising a base activated carbon that has reacted with a promoter selected from the group consisting of halides, halogens, and combinations thereof, such that the reaction product is effective for the removal of mercury from a gas stream.

In an embodiment, a promoted carbon sorbent is provided wherein the base activated carbon is selected from the group consisting of powdered activated carbon, granular activated carbon, carbon black, carbon fiber, aerogel carbon, pyrolysis char, activated carbon with an average particle size greater than that of flyash produced such that it is physically separable therefrom, and combinations thereof, and the promoter is selected from the group consisting of molecular halogens, Group V (CAS nomenclature is used throughout) halides, Group VI halides, hydrohalides, and combinations thereof. In an embodiment, the base activated carbon may have a mass mean particle diameter such that it can be substantially separated by physical means from entrained ash in the gas stream

from which mercury is to be removed. In an embodiment, the base activated carbon may have a mass mean particle diameter greater than about 40 micrometers.

In another embodiment, the sorbent comprises from about 1 to about 30 grams promoter per 100 grams of base activated carbon. Another embodiment further comprises an optional secondary component comprising a halogen or a hydrohalide such that the reactivity and mercury capacity of the sorbent are enhanced.

In another embodiment, the concentration of the optional secondary component on the finished sorbent is within the range of from about 1 to about 15 wt-% of the concentration of the promoter on the finished sorbent.

In another embodiment, an optional alkali component may preferably be added to provide a synergistic effect through combination of this alkali with the primary sorbent.

In another embodiment, the optional secondary component is selected from the group consisting of Group V halides, Group VI halides, HI, HBr, HCl, and combinations thereof. In another embodiment, the promoter is substantially in vapor form when combined with the base activated carbon. In another embodiment, the promoter is combined with an organic solvent prior to reaction with the base activated carbon. In another embodiment, the promoter and optional secondary component are combined with the base activated carbon substantially simultaneously. Another embodiment further comprises adding a mercury-stabilizing reagent selected from the group consisting of S, Se, $H_2S$, $SO_2$, $H_2Se$, $SeO_2$, $CS_2$, $P_2S_5$, and combinations thereof. Another embodiment further comprises adding an optional alkali component.

In an embodiment, a method is provided comprising providing a granular activated carbon; reacting the activated carbon with a promoter selected from the group consisting of halogens, halides, and combinations thereof, such that the reaction product comprises a promoted carbon sorbent effective for removal of mercury from a gas stream. In a further embodiment, the reaction product comprises from about 1 to about 30 grams promoter per 100 grams activated carbon. In another embodiment the reaction product has an average particle size distribution greater than the average size of entrained ash particles in the gas stream from which mercury is to be removed, such that the reaction product can be substantially removed from the entrained ash particles by physical means. In another embodiment the reaction product has a mass mean particle diameter greater than about 40 micrometers.

In another embodiment, the promoter is selected from the group consisting of molecular halogens, hydrohalides, Group V halides, Group VI halides, and combinations thereof. In another embodiment the promoter is in the gas phase when contacting the activated carbon. In another embodiment, the promoter is in an organic solvent when contacting the activated carbon.

In another embodiment, the promoter is selected from the group consisting of $Br_2$, a Group V bromide, a Group VI bromide, and combinations thereof.

In another embodiment, the method further comprises reacting the granular activated carbon with an optional secondary component comprising a halogen or a hydrohalide such that the reactivity and mercury capacity of the sorbent are enhanced. In another embodiment, the promoter and optional secondary component are contacted simultaneously with the activated carbon. In another embodiment the method further comprises adding a mercury-stabilizing reagent selected from the group consisting of S, Se, $H_2S$, $SO_2$, $H_2Se$, $SeO_2$, $CS_2$, $P_2S_5$, and combinations thereof. In an embodiment, a method is provided for control of mercury in a flue gas with substantially lower sorbent requirements. Through enhanced sorbent reactivity, mercury removal per gram of sorbent is increase, thereby decreasing the capital and operating costs by decreasing sorbent requirements.

In an embodiment, a method is provided for reducing mercury in flue gas comprising providing a sorbent, injecting the sorbent into a mercury-containing flue gas stream, collecting greater than 70 wt-% of the mercury in the flue gas on the sorbent to produce a cleaned flue gas, and substantially recovering the sorbent from the cleaned flue gas. In embodiments where less than 70 wt-% mercury removal is desired, the required removal may preferably be attained using less than half as much carbon as would be required with standard (non-enhanced) carbon. In a further embodiment, the method further comprises monitoring the mercury content of the clean flue gas, regenerating the recovered sorbent, and using the monitored mercury content of the cleaned flue gas to control the rate of injection of the sorbent. In another embodiment the injected sorbent is prepared in-flight by reacting an activated carbon and a promoter within a pneumatic transport line from which the reaction product is injected to the mercury-containing flue gas stream.

In another embodiment, the promoter is selected from the group consisting of molecular halogens, halides, and combinations thereof. In another embodiment, the promoter is reacted in the gas phase or as a vapor. In another embodiment, the promoter is added at from about 1 to about 30 grams per 100 grams of activated carbon.

In another embodiment, the injected sorbent is prepared in-flight by reacting an activated carbon, a promoter, and an optional secondary component to enhance the reactivity and capacity of the sorbent within a pneumatic transport line from which the reaction product is injected to the mercury-containing flue gas stream.

In another embodiment, the optional secondary component is selected from the group consisting of iodine, hydrohalides, Group V halides, Group VI halides, and combinations thereof. In another embodiment, the optional secondary component is added at from about 1 to about 15 wt-% of the promoter content. In another embodiment, the method further comprises adding to the sorbent a mercury-stabilizing reagent selected from the group consisting of S, Se, $H_2S$, $SO_2$, $H_2Se$, $SeO_2$, $CS_2$, $P_2S_5$, and combinations thereof.

In an embodiment, the method further comprises co-injecting an optional alkaline material, including without limitation alkaline and alkaline earth components, to improve the efficiency of mercury capture by capturing oxidized mercury and/or capturing gaseous components that might otherwise reduce sorbent capacity. In another embodiment, the optional alkaline material may preferably comprise calcium oxide, sodium carbonate, and the like, as are known in the art.

In another embodiment, the method further comprises using the monitored mercury content of the cleaned flue gas to control the composition of the sorbent. In another embodiment, the injected sorbent is prepared in-flight by reacting an activated carbon and a promoter within a pneumatic transport line from which the reaction product is injected to the mercury-containing flue gas stream, wherein the promoter is selected from the group consisting of molecular halogens, halides, and combinations thereof, wherein the promoter is reacted in the gas phase or as a vapor, wherein the promoter is added at from about 1 to about 30 grams per 100 grams of activated carbon, wherein the rate at which the promoter is added and the rate of sorbent injection are determined by a digital computer based at least in part on the monitored mercury content of the cleaned flue gas.

In an embodiment, a method for reducing the mercury content of a mercury and ash containing gas stream is provided wherein particulate activated carbon sorbent with a mass mean size greater than 40 μm is injected into the gas stream, mercury is removed from the gas by the sorbent particles, the sorbent particles are separated from the ash particles on the basis of size, and the sorbent particles are re-injected to the gas stream. In another embodiment, the mercury-containing sorbent particles are regenerated to remove some or substantially all of the mercury. In another embodiment, an alkaline component is co-injected into the gas stream. In another embodiment, the sorbent may further comprise a promoter. The promoter may preferably comprise a halide, a halogen, or both.

As will be described in more detail below, the present invention thus provides several advantages over previously known techniques, including significantly more effective and economical mercury sorbents for effluent gases, advantageously applicable to treating gas streams from fired equipment and gasification systems.

The foregoing has outlined rather broadly the features and technical advantages of the present invention in order that the detailed description of the invention that follows may be better understood. Additional features and advantages of the invention will be described hereinafter that form the subject of the claims of the invention. It should be appreciated by those skilled in the art that the conception and specific embodiments disclosed may be readily utilized as a basis for modifying or designing other structures for carrying out the same purposes of the present invention. It should also be realized by those skilled in the art that such equivalent constructions do not depart from the spirit and scope of the invention as set forth in the appended claims.

## BRIEF DESCRIPTION OF THE DRAWINGS

For a more detailed description of the preferred embodiments of the present invention, reference will now be made to the accompanying drawings.

FIG. **1** schematically illustrates methods for preparation of promoted carbon sorbents in accordance with the present invention.

FIG. **2** illustrates a proposed mechanistic model of the chemical reactions resulting in the oxidation and capture of mercury.

FIG. **3** schematically illustrates preparation of promoted carbon sorbents and processes for flue gas mercury reduction in flue gases and/or product gases from a gasification system in accordance with the present invention, including in-flight preparation of promoted carbon sorbent.

FIG. **4** is a diagram illustrating breakthrough curves for 5 wt/wt % brominated NORIT Darco FGD sorbent (37 mg+113 mg sand) in low-HCl (1 ppm) synthetic flue gas.

FIG. **5** is a diagram illustrating breakthrough curves for non-halogenated NORIT Darco FGD sorbent (37 mg+113 mg sand) in low-HCl (1 ppm) synthetic flue gas.

FIG. **6** is a bar chart illustrating pilot-scale mercury removal results, including large-size sorbent results.

FIG. **7** is a diagram illustrating the effects of sorbent size and injection rate on mercury removal for ESPs and fabric filters.

FIG. **8** is a diagram illustrating the breakthrough curves for a brominated NORIT Darco FGD sorbent with inert sand.

FIG. **9** is a diagram illustrating the breakthrough curves for brominated NORIT Darco FGD sorbent with a co-injected alkali material.

FIG. **10** is a plot of mercury removal vs. carbon injection rate with and without co-injection of alkali material.

## DETAILED DESCRIPTION

Herein will be described in detail specific preferred embodiments of the present invention, with the understanding that the present disclosure is to be considered an exemplification of the principles of the invention, and is not intended to limit the invention to that illustrated and described herein. The present invention is susceptible to preferred embodiments of different forms or order and should not be interpreted to be limited to the specifically expressed methods or compositions contained herein. In particular, various preferred embodiments of the present invention provide a number of different configurations and applications of the inventive method, compositions, and their uses.

The present invention provides a cost-effective way to capture pollutants by utilizing exceptionally reactive halogen/halide promoted carbon sorbents using a bromide (or other halogen/halide) treatment of the carbon, that capture mercury via mercury-sorbent surface reactions, at very short contact times of seconds or less. The sorbent does not require in situ activation (no induction period) in the gas stream to achieve high reactivity, as do conventional activated carbon sorbents. The reactivity of the sorbent toward the pollutants is greatly enhanced and the sorption capacity can be regenerated, the promoted sorbent may be regenerated, recycled and/or reused.

The treated carbons, treatment techniques, and optional additives discussed herein have applicability to mercury control from the product or effluent gas or gases from gasification systems, syngas generators, and other mercury-containing gas streams, in addition to the flue gas from combustion systems. Thus, it should be understood that the terms combustion system and flue gas as used throughout this description may apply equally to gasification systems and syngas or fuel gas, as will be understood by those skilled in the art.

Referring now to FIG. **1**, there is shown a block flow diagram illustrating some preferred embodiments of the process of the present invention to prepare promoted sorbents useful for mercury capture from flue gas and/or product gas form a gasification system streams. In a preferred embodiment illustrated by path **10-20**, block **10** illustrates providing a base activated carbon, and adding a halogen or halide promoter that reacts with the carbon, illustrated at block **20**, to produce a product promoted carbon sorbent. In embodiments where the halogen or halide is added, for example, as a vapor, no further steps may be necessary. In embodiments where the halogen or halide is added in, for example, a solvent, it may be desirable to employ solvent removal as illustrated by block **20**A.

Referring still to FIG. **1**, another preferred embodiment of the process of the present invention is illustrated by path **10-20-30**, comprising providing a base activated carbon as shown by block **10**, adding a halogen or halide promoter that reacts with the carbon, illustrated at block **20**, and adding a secondary component illustrated at block **30** that reacts with the result of block **20** to produce a product promoted carbon sorbent. In embodiments where both the halogen or halide promoter and the secondary component are added, for example, as a vapor, no further steps may be necessary. In embodiments where the halogen or halide promoter and/or secondary component are added in, for example, a solvent, it may be desirable to employ solvent removal as illustrated by block **30**A.

Referring still to FIG. **1**, another preferred embodiment of the process of the present invention is illustrated by path **10-40**, comprising providing a base activated carbon as illustrated at block **10**, and adding a halogen or halide promoter and a secondary component to the activated carbon together, with which they react as illustrated by block **40**, producing a product promoted carbon sorbent. As above, in embodiments where vapor additions are made to the activated carbon no further steps may be desired. In embodiments where one or more components are added in solvent, a solvent removal step may be provided as illustrated by block **40**A.

Referring still to FIG. **1**, also illustrated are preferred embodiments in which, as illustrated by block **50**, a flue gas stream is treated with product promoted carbon sorbent prepared as described above.

In some preferred embodiments the activated carbon provided may preferably be any of several types, as understood by those skilled in the art. For example, the activated carbon may include powdered activated carbon, granular activated carbon, carbon black, carbon fiber, carbon honeycomb or plate structure, aerogel carbon film, pyrolysis char, regenerated activated carbon from product promoted carbon sorbent, or other types as known in the art.

In some preferred embodiments the activated carbon provided may preferably be any of several types, as understood by those skilled in the art. For example, the activated carbon may include powdered activated carbon, granular activated carbon, carbon black, carbon fiber, carbon honeycomb or plate structure, aerogel carbon film, pyrolysis char, an activated carbon or regenerated activated carbon with a mass mean particle size greater than fly ash in a flue gas stream to be treated.

In some preferred embodiments the activated carbon provided may preferably be any of several types, as understood by those skilled in the art. For example, the activated carbon may include powdered activated carbon, granular activated carbon, carbon black, carbon fiber, carbon honeycomb or plate structure, aerogel carbon film, pyrolysis char, an activated carbon or regenerated activated carbon with a mass mean particle diameter preferably greater than 40 micrometers, more preferably greater than 60 micrometers, or a particle size distribution greater than that of the fly ash or entrained ash in a flue gas stream to be treated, such that the activated carbon and ash can be separated by physical means.

In some preferred embodiments, the halogen or halide promoter that is added to, and reacts with, the base activated carbon may preferably comprise, by way of illustration and not limitation, a molecular halogen in vapor or gaseous form, a molecular halogen in an organic solvent, a Group V or Group VI halide, such as $PBr_3$ or $SCl_2$, respectively, in vapor, liquid, or solution form (though not in an aqueous solvent).

Embodiments are also provided in which the organic solvent may preferably comprise a chlorinated hydrocarbon, such as dichloromethane, a hydrocarbon solvent, including for example, petroleum ether, ligroin, pentane, hexane, toluene, and benzene, carbon disulfide, a waste solvent, an ether, a recycled solvent, a supercritical solvent, such as supercritical $CO_2$, water (though not in the case of a Group V or Group VI halide), and others as will be apparent to those of skill in the art.

Referring now to FIG. **2**, there is illustrated a theory developed from scientific evidence to explain the nature of the promoting compounds. For example, as illustrated in FIG. **2**, hydrogen bromide reacts with the unsaturated structure of the activated carbon. This may be, by way of illustration only, a carbene species on the edge of the graphene sheet structures of the carbon. Molecular bromine or a bromine compound reacts to form a similar structure, with a positive carbon that is active for oxidizing the mercury with subsequent capture by the sorbent.

It has now been found that the formation of the new bromide compound with carbon increases their reactivity toward mercury and other pollutants. Additionally, the resulting bromide compound is uniquely suited to facilitate oxidation of the mercury. The effectiveness of the oxidation apparently results from the promotion effect of the halide, exerted on the developing positive charge on the mercury during the oxidation, known in the chemical art as a specific catalytic effect. Thus, as the mercury electrons are drawn toward the positive carbon, the halide anion electrons are pushing in from the other side, stabilizing the positive charge developing on the mercury and lowering the energy requirement for the oxidation process. Bromide is especially reactive, owing to the highly polarizable electrons in the outer 4p orbitals of the ion. Thus, adding HBr or $Br_2$ to the carbon forms a similar carbon bromide, in which the positive carbon oxidizes the mercury with the assistance of the bromide ion.

Referring now to FIG. **3**, a schematic flow diagram is provided of mercury control system **100** comprising preparation of promoted carbon sorbents, and flue gas mercury reduction, in accordance with preferred embodiments of the present invention. There is provided base activated carbon reservoir **110**, an optional halogen/halide promoter reservoir **120**, an optional secondary component reservoir **130**, and an optional akali component reservoir **180**, each of which with corresponding flow control device(s) **201**, **202**, **203**, and **208**/**209**, respectively. In conjunction with the optional alkali component reservoir **180**, optional flow control devices **208** and **209** can be used independently, together, or not at all.

Reservoirs **110**, **120**, **130**, and **180** connect through their respective flow control devices and via associated piping, to transport line **115**. Optional alkali component reservoir **180** may also connect, through respective flow control devices and via associated piping, to transport line **118**. A source of air, nitrogen, or other transport gas(es) is provided by gas source **170** to transport line **115** for the purpose of entraining materials discharged from reservoirs **110**, **120**, **130**, and **180** and injecting such materials, via injection point **116**, into contaminated flue gas stream **15**. A source of air, nitrogen, or other transport gas(es) may be provided by gas source **171** to transport line **118** for the purpose of entraining materials discharged from reservoirs **180** and injecting such materials, via injection point **119**, into flue gas stream **15**. Gas sources **170** and **171** may be the same or different, as desired. Alternatively, transport gas(es) may be provided to both transport lines **115** and **118** by gas source **170** (connection from source **170** to line **118** not shown). Although gas sources **170** and **171** are shown in FIG. **3** as compressors or blowers, any source of transport energy known in the art may be acceptable, as will be appreciated by those of skill in the art.

For clarity, single injection points **116** or **119** are shown in FIG. **3**, although one skilled in the art will understand that multiple injection points are within the scope of the present invention. Optical density measuring device (s) **204** is connected to transport line **115** and/or **118** to provide signals representative of the optical density inside transport line **115** and/or **118** as a function of time.

Downstream from injection point **116** and **119** is provided particulate separator **140**. By way of illustration and not limitation, particulate separator **140** may comprise one or more fabric filters, one or more electrostatic precipitators (hereinafter "ESP"), or other particulate removal devices as are known in the art. It should be further noted that more than one particulate separator **140** may exist, sequentially or in paral-

lel, and that injection point **116** and **119** may be at a location upstream and/or downstream of **140** when parallel, sequential, or combinations thereof exist. Particulate separator **140** produces at least a predominantly gaseous ("clean") stream **142**, and a stream **141** comprising separated solid materials. A sorbent/ash separator **150** separates stream **141** into a largely ash stream **152**, and a largely sorbent stream **151**. Stream **151** may then preferably be passed to an optional sorbent regenerator **160**, which yields a regenerated sorbent stream **161** and a waste stream **162**.

An optional Continuous Emission Monitor (hereinafter "CEM") **205** for mercury is provided in exhaust gas stream **35**, to provide electrical signals representative of the mercury concentration in exhaust stream **35** as a function of time. The optional mercury CEM **205** and flow controllers **201**, **202**, **203**, **208**, and **209** are electrically connected via optional lines **207** (or wirelessly) to an optional digital computer (or controller) **206**, which receives and processes signals and preferably controls the preparation and injection of promoted carbon sorbent into contaminated flue gas stream **15**.

In operation, promoted carbon sorbent and/or an optional alkali component is injected into contaminated flue gas stream **15**. After contacting the injected material with the contaminated flue gas stream **15**, the injected material reduces the mercury concentration, transforming contaminated flue gas into reduced mercury flue gas, **25**. The injected material is removed from the flue gas **25**, by separator **140**, disposed of or further separated by optional separator **150**, and disposed of or regenerated by an optional regenerator **160**, respectively. The reduced mercury "clean" flue gas stream **142** is then monitored for mercury content by an optional CEM **205**, which provides corresponding signals to an optional computer/controller **206**. Logic and optimization signals from **206** then adjust flow controllers **201**, **202**, **203**, **208**, **209** to maintain the mercury concentration in exhaust stream **35** within desired limits, according to control algorithms well known in the art. Flow controllers **201**, **202**, **203**, **208**, **209** can also be adjusted manually or be some other automated means to maintain the mercury concentration in exhaust stream **35** within desired limits, according to control algorithms well known in the art.

Referring still to FIG. **3**, there are illustrated several preferred embodiments for preparation and injection of promoted carbon sorbents and/or alkali components in accordance with the present invention. Stream **111** provides for introduction of base activated carbon from reservoir **110**, as metered by flow controller **201** manually or under the direction of computer **206**. The halogen/halide may be combined and react with the base activated carbon according to any of several provided methods. The halogen/halide may preferably be combined via line **121** directly into transport line **115**, within which it contacts and reacts with the base activated carbon prior to injection point **116**. This option is one form of what is referred to herein as "in-flight" preparation of a promoted carbon sorbent in accordance with the invention. Further, the halogen/halide may be combined via line **121***b* with base activated carbon prior to entering transport line **115**. Still further, the halogen/halide may be contacted and react with the base activated carbon by introduction via line **121***c* into reservoir **110**. This option is preferably employed when, for example, reservoir **110** comprises an ebulliated or fluidized bed of base activated carbon, through which halogen/halide flows in gaseous form or as a vapor. Of course, the halogen/halide may also preferably be contacted with the base activated carbon in liquid form or in a solvent, as discussed previously, and solvent removal (not shown in FIG. **3**) may then be provided if necessary as mentioned with respect to embodiments discussed with reference to FIG. **1**.

Similarly, the optional secondary component may be contacted and react directly in transport line **115** via line **131**, or optionally as described above with respect to the halogen/halide, via lines **131***b* and **131***c*.

Similarly, the optional alkali component from **180** may either be added in transport line **115** directly, or may be injected separately by transport line **118**, combining downstream in flue gas **15** for synergistic effects with base activated carbon, promoted carbon, or optional secondary components. Being able to vary onsite the amount of the optional alkali component relative to base activated carbon, promoted carbon, or optional secondary components is a key feature to overcome and optimize for site-specific operating and flue gas conditions.

In some preferred embodiments wherein contacting between components and reaction is performed in a liquid or solvent phase, stirring of such liquid and/or slurry mixtures may be provided. In other embodiments, the halogen/halide promoter and optional secondary component(s) may preferably be sprayed in solution form into or on the base activated carbon. In some such embodiments, drying, filtering, centrifugation, settling, decantation, or other solvent removal methods as are known in the art may then be provided.

In embodiments wherein the halogen/halide promoter is in gaseous or vapor form, it may be diluted in air, nitrogen, or other gas as appropriate. The halide/halogen gas, for example, gaseous HBr or $Br_2$, may be passed through an ebulliated or fluidized bed of granular or fibrous activated carbon, with the promoted carbon sorbent so produced removed from the top of the bed via gas entrainment for injection.

In some embodiments, the secondary component(s) may preferably comprise iodine or other halogens, hydrohalides, including without limitation HI, HBr, HCl, a Group V or Group VI element with a molecular halogen, such as $SCl_2$ and others. In some preferred embodiments, the promoted carbon sorbent may comprise from about 1 to about 30 g halogen/halide per 100 g base activated carbon. In some preferred embodiments, the promoted carbon sorbent may comprise an secondary component in concentration of from about 1 to about 15 wt-% of the concentration of the halogen/halide component.

In still other embodiments, the product promoted carbon sorbent may be applied to a substrate. In other embodiments, such prepared substrate(s) may be caused to contact a contaminated flue gas or gasification system product gas stream for mercury reduction purposes. Such substrates may be monolithic, rotating, or exposed to the gas stream in any number of ways known to those skilled in the art.

In some embodiments, a method is provided whereby a mercury stabilizing reagent is added to a promoted carbon sorbent to produce a bifunctional sorbent. Such stabilizing reagent(s) may be sequentially added, either before or after the addition and reaction of the halogen/halide. In some preferred embodiments, the halogen/halide preferably comprises Br or HBr, and the mercury-stabilizing reagent may comprise S, Se, $H_2S$, $SO_2$, $H_2Se$, $SeO_2$, $CS_2$, $P_2S_5$, and combinations thereof.

Halogens in Mercury Capture

Methodologies for using halogens for the treatment of flue gas have been problematic, owing to their reactivity with other gases and metals, resulting in corrosion and health issues. A "halogen" is defined as a member of the very active elements comprising Group VIIA (CAS nomenclature is used throughout; Group VIIA (CAS) corresponds to Group VIIB

(IUPAC)) of the periodic table. In the molecular elemental form of the halogens, including $F_2$, $Cl_2$, $Br_2$, and $I_2$, the reaction with a hot flue gas components leave little to react with elemental mercury. The atomic elemental halogen form, which includes the fluorine, chlorine, bromine, and iodine atoms, is about a million times more reactive to mercury but the concentration of the atomic forms is typically extremely low. In a large portion of electric utility coal combustion facilities, the concentrations are generally not sufficient to oxidize a significant amount of mercury.

The term "halide" as used herein is defined as a compound formed from the reaction of a halogen with another element or radical. In general, halide compounds are much less reactive than the molecular halogens, having a low chemical potential. Halides are considered reduced forms that do not, alone, oxidize other compounds. In the conventional view therefore, a halide-salt-treated activated carbon will not effectively oxidize elemental mercury and capture elemental mercury.

Halogen Promoted Sorbent Characteristics

The sorbent described here has a very high initial reactivity for oxidizing mercury and therefore can be used in very small amounts to achieve very high capture efficiencies, thus lowering operation costs and lessening waste disposal problems. In addition, further disposal reductions are obtainable by regenerating and reusing the sorbents produced using the inventive technology. The time interval required for the mercury and the promoted carbon sorbents of the present invention to successfully interact in a flue gas duct, with the subsequent collection of the mercury on the sorbent and ash is very short—less than seconds. Clearly, such collection times require the sorbent to have both high capacity and high reactivity toward mercury. The promoted carbon sorbent can be utilized in a very finely powdered form to minimize mass transfer limitations. However, again, the reactivity should be very high to capture all of the mercury encountered by the fine particles. Additionally, use of these enhancement technologies allows capture to be effective for larger sorbent particles which also allows separation of the sorbent from the ash to enable subsequent regeneration as well as ash utilization. One feature of this invention is the process to prepare a sorbent containing a halide compound formed on the carbon structure that provides a sorbent that is highly active on initial contact with the mercury contaminated gas stream, which allows for very effective capture of the mercury.

It appears that the inventive sorbents chemically combine molecular bromine, for example, from solution, with activated carbon (edge sites). X-ray photoelectron spectroscopy has established that the addition of bromine, chlorine, HBr, or HCl formed a chemical compound in the carbon structure. Thus, the sorbent produced from halogen and activated carbon does not represent a molecular halogen form, but rather a new chemically modified carbon (or halocarbon) structure. This phenomenon may not occur with the less reactive iodine, where an $I_2$ molecular complex can exist on the carbon basal plane. In the case of bromine, modified cationic carbon has a high chemical potential for oxidation of mercury. Thus, an entirely new model is presented for the reactivity of the bromine-treated carbon with mercury. The reactive carbon form can preferably be generated by the addition of bromine, hydrogen bromide, or combinations of bromine and other elements, as described herein. Halogen treatment resulted in higher-activity carbons because the halide anions (especially bromide and iodide) were effective in promoting the oxidation by stabilizing the developing positive charge on the mercury in the transition state for oxidation. Based on this model, several innovative, inexpensive, activity-enhancing features have been developed.

Optional Second Component

It has been demonstrated that addition of an optional second component, in addition to the bromine, results in improved reactivity and capacity for the sorbent, typically exceeding that of both the untreated carbon and the brominated carbon. The second compound comprises either a second halogen or a compound derived from a second halogen, such as HI. Thus, in addition to having a reactive carbon form present, the second component generates a Lewis base with greater ability to stabilize the developing positive charge on the mercury. Thus, the second component is an element with more polarized electrons (4p and 5p).

Optional Alkali Component

It has been demonstrated that addition of an optional alkali component with a base or promoted activated carbon results in improved mercury capture, typically exceeding that of both the untreated carbon and the promoted carbon. Test data indicate that flue gas contaminants, flue gas constituents ($SO_2$, $NO_x$, HCl, etc), operating temperature, mercury form, and mercury concentration may impact the effectiveness of the alkali addition. This suggests the need to be able to adjust and tailor the alkali-to-activated-carbon ratio onsite in order to overcome and optimize for a given set of site conditions.

The synergy that can be gained when co-injecting the two materials can be explained as follows. First, testing shows that binding sites on activated carbon (hereinafter "AC") can be consumed by chlorine species, sulfur species (i.e. sulfates), and other flue gas contaminants (arsenates, selenates, etc). The addition of optional alkali material will interact and react with these species/contaminants thus minimizing their consumption of AC mercury binding sites. Second, testing also shows that standard AC will continue to oxidize mercury, even though the binding sites are fully consumed. This oxidized mercury can then react with alkali material and subsequently be captured by particulate control devices. Consequently, the addition of the optional alkali component acts to protect mercury binding sites and capture oxidized mercury, thereby resulting in improved mercury reduction at lower cost. Alkali is generally much lower in cost (~ an order of magnitude less) than activated carbon, thus more of it can be used still resulting in overall lower costs.

"In-Flight" Sorbent Preparation

Furthermore, we have demonstrated that the halogen promoted carbon sorbent can be readily produced "in-flight". This is accomplished by, for example, contacting the vapors of any combination of halogens and optionally a second component, in-flight, with very fine carbon particles. The particles may be dispersed in a stream of transport air (or other gas), which also conveys the halogen/halide promoted carbon sorbent particles to the flue gas duct, or other contaminated gas stream, from which mercury is to then be removed. There is no particular temperature requirement for this contact. This technology is obviously very simple to implement, and results in a great cost savings to facilities using this technology for mercury capture.

Advantages of on-Site Preparation

In-flight preparation of the halogen/halide promoted carbon sorbent on location produces certain advantages. For example, the treatment system can be combined with the carbon injection system at the end-use site. With this technique, the halogen/halide is introduced to the carbon-air (or other gas) mixture in a transport line (or other part of the sorbent storage and injection system). This provides the following benefits over current conventional concepts for treating sorbents off-site:

Capital equipment costs at a treatment facility are eliminated.

Costs to operate the treatment facility are eliminated.

There are no costs for transporting carbon and additive to a treatment facility.

The inventive process uses existing hardware and operation procedures.

The inventive technology ensures that the sorbent is always fresh, and thus, more reactive.

No new handling concerns are introduced.

There are no costs for removing carbon from treatment system.

The inventive process allows rapid on-site tailoring of additive-sorbent ratios in order to match the requirements of flue gas changes, such as may be needed when changing fuels or reducing loads, thus further optimizing the economics.

The inventive technology reduces the amount of spent sorbents that are disposed.

With the foregoing and other features in view, there is provided, in accordance with the present invention, embodiments including a process for preparing and regenerating halogen/halide promoted carbon sorbents, whose activity for mercury capture is enhanced by the addition of halogen (e.g. bromine) to the carbon structure.

Sorbent Injection Location

Some of the preferred embodiments contemplate the use of a halogen promoted sorbent in a powdered form that has been injected into a flue gas stream before or after ash particulates have been removed. Other embodiments of the inventive composition of the halogen promoted carbon sorbent comprise a powdered modified activated carbon prepared by adding $Br_2$ or HBr plus a second optional component. Other embodiments allow the addition of the optional alkali component in conjunction with a base activated carbon and/or with the use of a halogen based sorbent and any other combinations of the sorbent technologies provided in this patent. Alternatively, embodiments include methods wherein the sorbent is on a moving contactor consisting of particles or fibers containing one or more of the compositions listed above.

Sorbent Regeneration

Any of the above embodiments of the halogen/halide promoted carbon sorbent can be easily regenerated; the poisoning contaminants from the flue gas are preferably removed and an inexpensive promoting agent added, to restore mercury sorption activity. This process of promoting the activity of the carbon itself contrasts with the earlier, more expensive, conventional methods of adding a reagent (such as peroxide, gold, triiodide, etc.) to a sorbent. The halogen/halide promoted carbon sorbent of the present invention, treated with bromine and/or optional components, is noncorrosive. Detailed examples of sorbent regeneration techniques are described in co-pending, commonly owned PCT patent application No. PCT/US04/12828, titled "PROCESS FOR REGENERATING A SPENT SORBENT", which is hereby incorporated by reference in its entirety.

Sorbent Injection Control Schemes

Another advantage of the present invention relates to the use of a feedback system to more efficiently utilize certain aspects of the invention. Where possible and desirable, the mercury control technology of the present invention may preferably utilize continuous measurement of mercury emissions as feedback to assist in control of the sorbent injection rate. Tighter control on the sorbent and optional component(s) levels can be achieved in this way, which will ensure mercury removal requirements are met with minimal material requirements, thus minimizing the associated costs. In an embodiment, the mercury emissions are continuously measured downstream of the injection location, preferably in the exhaust gas at the stack.

Promoted Carbon Sorbents

Reactions of halogens and acidic species with the basic binding sites on the activated carbon sorbent create sites for oxidizing mercury. Other metal ions, such as boron, tin, arsenic, gallium, Sb, Pb, Bi, Cd, Ag, Cu, Zn, or other contaminants, will also react with the oxidation sites generated on the carbon.

According to our model, adding the bromine from the bromine reagent or a proton from a hydrogen halide acid to a basic carbene site on the carbon edge structure forms a carbocation that accepts electrons from the neutral mercury atom forming the oxidized mercury species that is bound to the sorbent surface. The reactive site may also generate reactive bromine radicals or carbon radicals at the active sites on the carbon. Thus, the activated carbon serves to stabilize the bromine, yet provides a highly reactive bromine-containing reagent that can oxidize the mercury and promote its capture on the activated carbon. The sorbent that contains bromine is expected to be more reactive than the corresponding sorbent containing chlorine and much less expensive than the sorbent containing iodine.

## EXAMPLES

To more clearly illustrate the present invention, several examples are presented below. These examples are intended to be illustrative and no limitations to the present invention should be drawn or inferred from the examples presented herein.

### Example 1

### Preparation and Testing of Halogenated Carbon (& Comparative Example) Gas Phase Halogenation

Finely powdered activated carbon (such as NORIT Darco FGD, NORIT Americas, Inc., Marshall, Tex. (USA), although others are suitable, as will be recognized by those skilled in the art), was placed in a rotating plastic barrel with side blades (a 5 $ft^3$ (0.14 $m^3$) cement mixer) fitted with a tight plastic lid to prevent loss of the fine powder during the preparation. In a separate vessel, gas phase bromine was generated by passing a nitrogen stream over a weighed amount of liquid bromine that is warmed to about 40°-50° C. The vapor pressure of the bromine was such that a dark red gas is generated and passed out of the generator. The outlet from the gaseous bromine generator is connected via a ¼ inch (0.64 cm) plastic hose to a stationary metal tube inserted through a flange in the center of the plastic lid and passing into the center of the barrel. The flange is not air tight so that the excess of nitrogen is released after the bromine is transferred to the tumbling carbon. Thus, the bromine gas stream continuously passed into the rotating barrel where it contacted the tumbling carbon. The unit is then operated until the desired amount of bromine has combined with the carbon. Typically, this is 0.4 to 1 kg of bromine to 20 kg of carbon (2-5 wt. %). When the reaction is completed, the carbon is weighed. The treated carbon is odorless and does not cause skin irritation since the bromine has completely reacted with the carbon to produce the brominated carbon.

XPS spectra demonstrate that the brominated carbon contains both covalent carbon-bound (organic) bromide as well as anionic bromide. The product contains the same moisture

originally present in the activated carbon (5-17 wt %), but does not require further drying for use. The moisture is driven out at higher temperatures (>150° C.), and the bromine was not released until very high temperatures

Bench-Scale Testing of Mercury Oxidation and Capture Efficiency

A bench-scale apparatus and procedure based on the above description was used to test the initial activities and capacities of several promoted activated carbon sorbents using powdered carbon, including bromine-containing activated carbons prepared from a variety of carbons, including commercially available sorbents, aerogel film sorbents, and the original precursor carbons for comparison.

A detailed description of the apparatus and its operation is provided in Dunham, G. E.; Miller, S. J. Chang, R.; Bergman, P. *Environmental Progress* 1998, 17, 203, which is incorporated herein by reference in its entirety. The bench scale mercury sorbent tests in the flue gas compositions were performed with finely (−400 mesh) powdered sorbents (37 mg) mixed with 113 mg sand and loaded on a quartz filter (2.5 inch (6.35 cm)). The loaded filter and holder were heated in an oven (125° C.) in the simulated flue gas stream (30 SCFH (standard cubic feet/hr) or 0.79 NCMH (normal cubic meters per hour)) containing the following: $O_2$ (6%), $CO_2$ (12%), $SO_2$ (600 ppm), NO (120 ppm) $NO_2$ (6 ppm), HCl (1 ppm), $Hg^0$ (11 μg/$m^3$), $H_2O$ (15%), and $N_2$ (balance). Elemental mercury was provided by a standard permeation tube source placed in a double jacketed glass condenser, and heated to the desired temperature. Mercury concentrations in the gas streams were determined with a continuous mercury emission monitor (Sir Galahad mercury CEM mfr. P.S. Analytical Deerfield Beach Fla. USA), and a $SnCl_2$ cell was used to convert oxidized species to elemental, so that both elemental and oxidized mercury concentration data could be obtained for both the influent and the effluent concentrations from the sorbent bed. Mercury concentrations were calibrated for the flow rates used. Spent sorbents were analyzed for mercury to determine the mass balance.

Referring now to FIG. **4**, the effluent mercury concentration data are plotted as a percent of the influent mercury versus time. The resulting curve (breakthrough curve) for the halogenated sorbents typically showed 0%-1% Hg in the effluent (99+% capture) at the beginning, and increasing only after 30-60 minutes (breakthrough point), depending on the sorbent. FIG. **4** illustrates the breakthrough curves for 5 wt/wt % brominated NORIT Darco FGD sorbent (37 mg+113 mg sand) with synthetic flue gas containing 1 ppm HCl. Total Hg (solid circles) and elemental Hg (solid squares) in the effluent are presented as a percent of the inlet Hg. "EOT" indicates the end of test (the later data points shown are for calibration checks).

FIG. **5** presents the comparative breakthrough curves for the corresponding nonhalogenated sorbents typically initiated at 5%-50% of inlet mercury, depending on the HCl concentration in the synthetic flue gas, thus indicating considerably lower reactivity for oxidation and capture of the mercury for the nonhalogenated sorbents. After breakthrough of either halogenated or nonhalogenated sorbent, most of the mercury in the effluent was oxidized mercury.

## Example 2

### Gas Phase Halogenation of Fluidized Carbon

A bed of activated carbon supported in a vertical tube by a plug of glass wool was fluidized by a nitrogen stream. The top of the fluidized bed tube was connected to a catching trap for carbon fines that blow out the top of the tube. The bromine gas generator as described in Example 1 was attached to the fluidized carbon bed and the desired amount of gaseous bromine was passed into the bed. The contents of the trap were then mixed with the material in the bed and weighed. The resulting brominated carbon exhibited properties similar to the brominated carbon of Example 1.

## Example 3

### Liquid Phase (Water) Halogenation

A 5% solution of bromine in water was prepared by carefully adding 50 g of bromine to 1 liter of cold water. One kg of activated carbon was added to the bromine solution in a large metal can. The resulting slurry was stirred with a large paddle during the addition and for a short time afterwards until all the bromine had reacted with the carbon, as indicated by the disappearance of the red color. The slurry was then filtered using a Buchner funnel under vacuum. The moist carbon that was collected on the filter was dried in an oven at 110° C. for several hours to constant weight. As in Example 1, some moisture remains in the carbon, however. The dried carbon was then tumbled in the rotating barrel with metal pieces to break up and fluff the carbon.

## Example 4

### Addition of the Optional Second Halide Component

Brominated carbon was produced by solution phase bromination similar to that described with reference to Example 3. However, before filtration, a solution of hydriodic acid (HI) was added to the slurry in an amount equal to 10% of the bromine amount. The slurry was stirred to complete the reaction and then filtered and dried as described in Example 3.

## Example 5

### Liquid Phase Phosphohalogenation

A solution of phosphorus tribromide (500 g) in ligroin (10 liters) was stirred in a large metal can and 10 kg of activated carbon was added. The resulting slurry was stirred with a large paddle at ambient temperature to complete the reaction. The slurry was filtered under vacuum on a large Buchner funnel in several batches. The wet filter cake was dried at 110° C. in an oven to constant weight. The dried product was fluffed in the rotating barrel as described in Example 3.

## Example 6

### Preparation and Sorption on Larger-Particle Carbon

Tests were conducted on a pilot-scale combustor while firing a subbituminous coal, to evaluate mercury control by injecting larger-than-normal sized treated activated carbon. Standard AC sorbents generally are of fine size with a mean particle diameter of less than 20 micrometers, which is also typical of the flyash that is generated from pulverized coal combustion. Consequently, because the sizes of standard AC and flyash are similar, separation of the two is difficult. Injection of larger sized AC is generally not considered because the sorbent effectiveness decreases with size. In a scheme to recycle the injected carbon, the carbon is separated from the flyash. A separation based on size fractionation requires a

treated larger particle sorbent. To test this concept, a treated larger sized (>60 μm) sorbent was developed, prepared, and tested.

Treatment—Gas Phase Halogenation

Granular activated carbon (Calgon F400) was ground and sieved through conventional mesh screens. The mesh size fraction −170 to +240 (corresponding to about 60 to about 88 micrometers) was collected and placed in a rotating vessel as described in Example 1 above. In a separate vessel, gas phase bromine was generated by passing a nitrogen stream over a weighed amount of liquid bromine that was warmed to about 40°-50° C., and the outlet from this gaseous bromine generator was connected via a ¼ inch (6.35 mm) plastic hose to a stationary metal tube inserted through a flange in the center of the lid and passing into the center of the rotating vessel, also as described in Example 1. The unit was operated until the desired amount of bromine had combined with the carbon, in this case 0.05 kg of bromine to 1 kg of carbon (5 wt. %). When the reaction was completed, the carbon was weighed. The treated carbon was odorless as has been described above.

PTC Apparatus

The pilot-scale combustor, known as the "Particulate Test Combustor" (hereinafter "PTC"), is a 550,000-Btu/hr (about 161 kW) pulverized coal ("PC")-fired unit, designed to generate combustion flue gas properties and fly ash that are representative of those produced in a full-scale utility boiler. The combustor is oriented vertically to minimize wall deposits. A refractory lining helps to ensure adequate flame temperature for complete combustion and prevents rapid quenching of the coalescing or condensing fly ash. Based on the superficial gas velocity, the mean residence time of a particle in the combustor is approximately 3 seconds. The coal nozzle of the PTC fires axially upward from the bottom of the combustor, and secondary air is introduced concentrically to the primary air with turbulent mixing. Coal is introduced to the primary air stream via a screw feeder and eductor. An electric air preheater is used for precise control of the combustion air temperature. Originally, the PTC used cold-water annular heat exchangers to provide flue gas temperature control to the baghouse (also referred to as a "fabric filter") or electrostatic precipitator (ESP). However, analysis of ash deposits collected from the heat exchangers indicated that some mercury was collected on the duct walls. To minimize this effect, the heat exchangers were modified to provide for higher duct wall temperatures.

The PTC instrumentation permits system temperatures, pressures, flow rates, flue gas constituent concentrations, and particulate control device (baghouse, Advanced Hybrid Particle Collector/AHPC™, and/or electrostatic precipitator/ESP) operating data to be monitored continuously and recorded on a data logger.

PTC Procedure

Flue gas samples were taken at combinations of two of the three available system sample points: the furnace exit, the particulate control device inlet, and the particulate control device outlet. After passing through sample conditioners to remove moisture, the flue gas was typically analyzed for $O_2$, CO, $CO_2$, $SO_2$, and $NO_x$. Each constituent was normally analyzed at both the furnace exit and the outlet of the particulate control device simultaneously, using two analyzers. The concentration values from all of the instruments were recorded continuously. In addition, data were manually recorded at set time intervals. $NO_x$ was determined using a pair of Rosemount Analytical $NO_x$ chemiluminescent analyzers. $SO_2$ was measured using a pair of Ametek Instruments photometric gas analyzers. The remaining gases were measured by a pair of Rosemount Analytical multi-gas continuous emissions monitors. Each of these analyzers was regularly calibrated and maintained to provide accurate flue gas concentration measurements.

The baghouse vessel was a 20 inch (50.8 cm) (ID) chamber that is heat-traced and insulated, with the flue gas introduced near the bottom. The combustor produced about 200 ACFM (actual cubic feet per minute; about 5.7 actual $m^3$/min) of flue gas at 300° F. (about 150° C.), therefore three 13-ft by 5-inch (3.96 m by 12.7 cm) bags provided an air-to-cloth ratio of 4 ft/min (1.22 m/min). Each bag was cleaned separately in operation with its own diaphragm pulse valve. In order to quantify differences in pressure drop for different test conditions, the bags were cleaned on a time basis, rather than with the cleaning cycle initiated by pressure drop. Once bag cleaning was initiated, all three bags were pulsed in rapid succession on-line.

Tests were also conducted with a single-wire, tubular ESP replacing the fabric filter. The ESP unit was designed to provide a specific collection area of 125 at 300° F. (150° C.). Since the flue gas flow rate for the PTC is 130 SCFM (standard cubic feet per minute; about 3.7 NCMM (normal $m^3$/min)), the gas velocity through the ESP is 5 ft/min (about 1.52 n/min). The plate spacing for the ESP unit is 11 in (27.9 cm). The ESP was designed to facilitate thorough cleaning between tests so that all tests can begin on the same basis.

PTC Results

Results are illustrated in FIG. **6**. As can be observed in FIG. **6**, even though the tested sorbent particle size is significantly larger than normal sorbent particles, the treated larger-than-normal sized (that is, >60 micrometers) activated carbon sorbent was quite effective at capturing mercury. Approximately 75% of the mercury was captured when the larger-sized treated AC was injected ahead of the pilot-scale ESP, while approximately 85% of the mercury was captured when injected ahead of the pilot-scale fabric filter ("FF"). Note that in FIG. **6** (and throughout) "Macf" (and "MACF") indicates million actual cubic feet (1 MACF is about 0.028 million actual cubic meters or "MACM").

Referring now to FIG. **7**, it can be observed that the larger-sized treated AC when injected ahead of the pilot-scale ESP (diamond symbol(s)) performed better than the finer standard AC (triangles) under the same arrangement. In comparison, when injected ahead of the fabric filter (FF), the larger-sized treated AC (square) performed similarly to slightly worse. However, for this application, the larger-sized treated AC can be physically separated from the smaller flyash particles, and the sorbent can then be regenerated, recycled, and reused. This will substantially improve overall utilization and economics. These data thus show that a larger-than-normal sized sorbent can provide effective mercury control and ease flyash and AC separation, thereby also preserving the characteristics of the flyash for sale and beneficial use. Accordingly, because >60 μm sorbent particles have been successfully demonstrated, superior mercury control can be obtained with >40 μm particles, which may be preferred in some applications, depending on the sorbent particle/ash separation system used. Note that in FIG. **7** (and throughout) "Macf" (and "MACF") indicates million actual cubic feet.

## Example 7

### Liquid Phase (Organic Solvent) Halogenation

A 5% solution of bromine in ligroin was prepared by carefully adding 50 g of bromine to 1 liter of cold ligroin. One kg of activated carbon was added to the bromine solution in a large metal can. The slurry was stirred with a large paddle

during the addition and for a short time afterwards until all the bromine had reacted with the carbon as indicated by the disappearance of the red color. The slurry was filtered using a Buchner funnel under vacuum. The carbon cake that was collected on the filter was dried in an oven at 110° C. for several hours until it appeared dry and a constant weight was obtained. As in Example 1, some moisture was left in the carbon, however. The dried carbon was then tumbled in the rotating barrel with metal pieces to break up and fluff the carbon.

Example 8

Promoted Activated Carbon Sorbents

A bench-scale procedure based on the above description was used to test the initial activities and capacities of several promoted activated carbon sorbents using powdered carbon, including the bromine-containing activated carbons prepared from a commercially available sorbent and an aerogel carbon film sorbent, as well as the original precursor carbons for comparison. Bromine-treated carbons were prepared by impregnation of the powdered activated carbon precursors in a stirred solution of bromine in carbon tetrachloride or methylene chloride, or alternatively, in an aqueous solution of HBr, followed by drying in air at ambient temperature and drying in an oven at 100° C. in air or nitrogen. Bromine-treated carbons were also prepared by impregnating bromine from the gas phase by passing the gas through a rotating dry bed of the activated carbon precursor. The results indicated that adding a second component to the solution improved the capacity of the sorbent.

The carbons were initially tested in a heated bed, where a synthetic flue gas stream containing elemental mercury (11 $\mu g/m^3$) was passed through the bed. Concentrations of total and elemental Hg in the effluent gas were determined using a Sir Galahad mercury CEM ("continuous emission monitor") (mfr. P S Analytical, Deerfield Beach, Fla., USA). The powdered sorbent was supported on a quartz filter during the test, and the other sorbents were tested as a triple layer. A comparison of the original commercial-grade powdered carbon sorbent with the sorbent after it was treated with 0.1 N HBr, and the powder was collected by centrifugation and drying, revealed that the mercury capture activity increased from an initial capture efficiency of about 50% of the Hg in the inlet to 100% capture. A comparison of the sorbent after subsequent regeneration with HBr indicated that it not only captured mercury at the same level as before (100% capture) but its capacity was prolonged by several minutes, and thus enhanced. Similar results were obtained with the carbon film and carbon fiber sorbents by treatment with molecular bromine in solution or in dry beds as described above.

Example 9

Fluidized/Ebulliated Bed Preparation

An activated carbon sorbent was prepared by treating the carbon by impregnating molecular bromine from a gas composition containing molecular bromine by flowing the gas through a liquid bromine reservoir in series with a fluidized bed or ebulliated bed of the carbon. The amount of bromine taken up by the carbon ranges (in one example) from <1 to about 30 g per 100 g of activated carbon, depending on the proportions used.

Example 10

Full-Scale Testing

In this example, a baghouse (fabric filter) or ESP was used to collect particulates in the exhaust of a full-scale commercial pulverized coal-burning facility. A scrubber and sorbent bed were also used to remove undesired constituents from the flue gas stream, before being fed to the stack. In this example, the halogen/halide promoted carbon sorbent was injected into the flue gas after the boiler. In general however, the inventive sorbent can be injected where desired (e.g., before, after, or within the boiler).

In one exemplary test conducted at a facility fired with lignite coal, the flue gas phase mercury (elemental) concentration was between 10 and 11 $\mu g/m^3$. The ash and injected carbon were collected in the baghouse at 350° F. to 375° F. (about 175-190° C.). Injection of commercial-grade activated carbon powder (untreated) at a rate of 1.0 lb/MACF ("MACF" and "Macf" represent one million actual cubic feet; 1.0 lb/MACF is about 16 kg/MACM (million actual cubic meters)) resulted in mercury effluent concentrations of 3.8-4.2 $\mu g/m^3$ (representing 62%-58% removal of the mercury from the gas, respectively), and at 2.0 lb/MACF (about 32 kg/MACM), gave 74%-71% removal. Injection of the bromine-treated carbon at 1.0 lb/MACF resulted in 73%-69% removal and at 2.0 lb/MACF gave 86%-84% removal. Thus, a significant increase in the mercury capture was exhibited during use of the bromine promoted carbon sorbent of the present invention.

Example 11A

Addition of Optional Alkaline Component—Bench-Scale

The efficiency of the activated carbons for mercury capture can be improved considerably by employing a basic material co-injected with the activated carbon, in order to capture any oxidized mercury that may be released from the sorbent, or to capture some of the sulfur or selenium oxides in the flue gas that can have a detrimental effect on the sorbent capacity.

Bench-scale testing was conducted by preparing a filter composed of 37 mg of brominated activated carbon mixed with 113 mg of calcium oxide. The test was conducted as described in Example 1 and compared with the same carbon sorbent but with an inert diluent. The breakthrough curve for the mixture of brominated (2%) NORIT Darco FGD sorbent with inert sand is shown in FIG. **8**, and the breakthrough curve for the mixture with CaO is shown in FIG. **9**. It can be seen that the point of 50% breakthrough improves to 65 minutes with the mixture with CaO from only 48 min with the sand mixture.

Example 11B

Addition of Optional Alkaline Component—Pilot-Scale

Tests were conducted on the pilot-scale PTC combustor described above with reference to Example 6 while firing a Texas lignite to evaluate mercury control by co-injecting a standard activated carbon (also referred to herein as "AC") and an alkali material upstream of a fabric filter. Typical results are illustrated in FIG. **10**. As shown in FIG. **10**, co-injecting lime with activated carbon vastly improved mercury removal. Mercury removals of approximately 90% were

achieved with the co-injected sorbents, whereas less than 60% removal was achieved with the use of standard AC alone, even at much higher injection rates. Data from similar tests show that injecting similar quantities of sodium carbonate and AC, and lime and AC, resulted in mercury removals of approximately 80%, and 87%, respectively. These data suggest that other alkali can also be co-injected with AC to improve mercury removal. Other data show that flue gas temperature may impact the effectiveness of the alkali addition. Further test data indicate that flue gas contaminants, flue gas constituents ($SO_2$, $NO_x$, HCl, etc.), operating temperature, mercury form, and mercury concentration may impact the effectiveness of the alkali addition. This indicates that it may be desirable to be able to adjust and tailor, onsite, the alkali-to-AC ratio in order to optimize removal for a given set of site conditions.

Without wishing to be bound by any particular theory, the synergy observed in the improved performance when co-injecting the two materials can be explained as follows. First, tests indicate that binding sites on AC can be consumed by sulfur species and other contaminants. The alkali material interacts and reacts with these species thus minimizing their consumption of AC mercury binding sites. Second, other work has shown that standard AC will continue to oxidize mercury even though the binding sites are fully consumed. This oxidized mercury can then react with alkali material and subsequently be captured by the particulate control device. Thus, combining alkali with treated and/or non-treated AC synergistically takes advantage of these two mechanisms, resulting in improved mercury capture at reduced costs.

## Example 12

### Brominated Carbon Sorbent for Gasification Fuel Gas Preparation of 5% Br2W-AC

Using a procedure similar to Example 3, a 2.5 wt/vol % solution of bromine in water was prepared. Granular Calgon F400 was added to the bromine solution to give a 5 wt/wt % brominated carbon product. The bromine solution was stirred with a large paddle during and after the addition until the red color in the water disappeared. The suspension was filtered by vacuum on a large Buchner funnel. The filter cake was dried in air, and then in an oven at 110° C. until a stable weight was obtained The moisture was reduced to 15%.

Preparation of 5% Br2D-AC

A brominated sorbent was prepared from $Br_2$ addition in solvent as described in Example 7, except that dichloromethane was used as the solvent instead of ligroin, and granular Calgon F400 was used.

Preparation of 5% PBr3-AC

A phosphohalogenated sorbent was prepared from $PBr_3$ using the method described in Example 5, except granular Calgon F400 was used.

Testing in Hydrogen Atmosphere—Procedure

To simulate the capture of mercury from a heated fuel gas or syngas from coal gasification, tests were conducted employing a stream comprising 10% vol/vol hydrogen in nitrogen passing through the sorbent at 500 cc/min. The stream contained 26.9 micrograms/$m^3$ of elemental mercury from a commercial mercury permeation source.

In the tests, the sorbent (0.5 g) was placed in a 0.39 inch (1 cm, inside diameter) glass tube fitted with a medium frit sintered glass filter disc to hold the sorbent in the gas stream. The tube containing the sorbent bed was connected to a gas inlet tube for introducing the gas stream containing the mercury vapor and at the outlet to a tube connection to the detector. The detector was a Semtech 2000 continuous mercury emission monitor. The tube was equilibrated in a nitrogen flow (450 cc/min) for 5 minutes at ambient temperature to stabilize the system. The detector showed 0 concentration of mercury in the effluent from the sorbent bed. (The blank run with no sorbent read 26.9 micrograms/$m^3$). The tube was then placed in an oven at the selected temperature for the test (from 250° to 400° C.). Effluent mercury concentration data from the detector were collected until the detector showed a constant reading for 5 minutes. Hydrogen (50 cc/min) was then added to the gas stream and detector readings were taken every 5 min. Tests were conducted at several oven temperatures for various periods of time up to 3 hours, depending on the temperature and sorbent. The elemental mercury concentration data were plotted as a percent of inlet mercury concentration versus time as in Example 1. All the mercury in the effluent was elemental, so a single detector was sufficient, and no $SnCl_2$ trap was needed to convert to elemental mercury (as in Example 1). The time for 50% breakthrough (time to reach 50% capture) was then determined from the breakthrough curves.

Results

The results are shown in Table 1 (below) for the unbrominated sorbent (Calgon F-400), the brominated sorbents (5% Br2W-AC and 5% BrD-AC), and the phosphobrominated sorbent (5% PBr3-AC). The maximum mercury concentration obtained in the effluent in each run is also reported in Table 1 for the time period indicated in the last column.

Under the reducing hydrogen conditions, the unbrominated sorbent broke through immediately and was exhausted after only 6.5 min. This complete failure occurred because the hydrogen reduces the captured mercury in the unbrominated sorbent at any temperature above 100° C. Both of the brominated sorbents exhibited excellent reactivity and good capacity at all temperatures, up to at least 400° C. The phosphobrominated sorbent exhibited superior reactivity and capacity at all temperatures, up to at least 400° C.

TABLE 1

Times for 50% Breakthrough
Maximum Observed Hg Concentrations for Sorbents
(10% Hydrogen Streams)

| Sorbent | Temp (° C.) | 50% breakthrough (min) | Maximum [Hg] (μg/$m^3$) | Time (min) |
|---|---|---|---|---|
| F-400 | 250 | 6 | 20.3 | 6.5 |
| 5% Br2W-AC | 250 | >150 | 1.4 | 150 |
| 5% Br2W-AC | 300 | >180 | 4.3 | 180 |
| 5% Br2W-AC | 350 | 160 | 15.1 | 180 |
| 5% Br2W-AC | 400 | 60 | 13.9 | 65 |
| 5% PBr3-AC | 250 | >140 | 0.4 | 140 |
| 5% PBr3-AC | 300 | >150 | 0.5 | 150 |
| 5% PBr3-AC | 350 | >150 | 1.4 | 150 |
| 5% Br2D-AC | 350 | >180 | 2.1 | 180 |
| 5% Br2D-AC | 400 | >180 | 10.9 | 180 |

While the preferred embodiments of the invention have been shown and described, modifications thereof can be made by one skilled in the art without departing from the spirit and teachings of the invention. The embodiments described herein are exemplary only, and are not intended to be limiting. Many variations and modifications of the invention disclosed herein are possible and are within the scope of the invention. Accordingly, the scope of protection is not limited by the description set out above, but is only limited by the claims which follow, that scope including all equivalents of the subject matter of the claims.

The examples provided in the disclosure are presented for illustration and explanation purposes only and are not intended to limit the claims or embodiment of this invention. While the preferred embodiments of the invention have been shown and described, modifications thereof can be made by one skilled in the art without departing from the spirit and teachings of the invention. Process criteria, equipment, and the like for any given implementation of the invention will be readily ascertainable to one of skill in the art based upon the disclosure herein. The embodiments described herein are exemplary only, and are not intended to be limiting. Many variations and modifications of the invention disclosed herein are possible and are within the scope of the invention. Use of the term "optionally" with respect to any element of the invention is intended to mean that the subject element is required, or alternatively, is not required. Both alternatives are intended to be within the scope of the invention.

The discussion of a reference in the Background is not an admission that it is prior art to the present invention, especially any reference that may have a publication date after the priority date of this application. The disclosures of all patents, patent applications, and publications cited herein are hereby incorporated herein by reference in their entirety, to the extent that they provide exemplary, procedural, or other details supplementary to those set forth herein.

Although the invention is described herein as a sorbent material and associated processes for its preparation and use, it is nevertheless not intended to be limited to the details described, since various modifications and structural changes may be made therein without departing from the spirit of the invention and within the scope and range of equivalents of the claims.

We claim:

**1**. A method for separating mercury from a mercury containing gas comprising:

(a) promoting at least a portion of a particulate sorbent material comprising activated carbon by chemically reacting the sorbent material with a bromine containing promoter to form a promoted brominated sorbent, wherein the bromine containing promoter is in gaseous form, vapor form, or non-aqueous liquid form, and wherein the activated carbon contains graphene sheets having carbene species edge sites which react with the bromine containing promoter to form a carbocation paired with a bromide anion in the promoted brominated sorbent for oxidation of the mercury;

(b) chemically reacting elemental mercury in the mercury containing gas with the promoted brominated sorbent to form a mercury/sorbent chemical composition; and

(c) separating particulates from the mercury containing gas, the particulates including ash and the mercury/sorbent chemical composition.

**2**. A method according to claim **1**, wherein the bromine containing promoter is in gaseous form.

**3**. A method according to claim **1**, wherein the bromine containing promoter is in an organic solvent.

**4**. A method according to claim **1**, wherein the carbocation paired with a bromide anion chemically react with elemental mercury form the mercury/sorbent composition.

**5**. A method according to claim **1**, wherein at least a portion of the basic binding sites of the activated carbon reacts with oxidized mercury in the mercury containing gas to form another mercury/sorbent chemical composition.

**6**. A method according to claim **1**, wherein the step of separating particulates from the mercury containing gas comprises separating in a particulate separator comprising one or more electrostatic precipitators.

**7**. A method according to claim **1**, further comprising a step of regenerating a promoted brominated sorbent from the mercury/sorbent chemical composition for reuse.

**8**. A method according to claim **7**, further comprising injecting the regenerated promoted brominated sorbent into a mercury containing gas.

**9**. A method according to claim **1**, further comprising injecting an alkali component into the mercury containing gas for protecting mercury binding sites and capturing oxidized mercury.

**10**. A method according to claim **9**, wherein the alkali component comprises an oxide, hydroxide, carbonate, phosphate of an alkali or alkaline earth element.

**11**. A method according to claim **1**, further comprising adding a second halogen or halide promoter to the promoted halogen containing sorbent.

**12**. A method according to claim **11**, wherein the second halogen or halide promoter comprises HI, HBr, HCl, Group V element with halogen, or Group VI element with halogen.

**13**. A method according to claim **1**, further comprising adding a stabilizing agent to the promoted brominated sorbent.

**14**. A method according to claim **13**, wherein the stabilizing agent comprises at least one of S, Se, $H_2S$, $SO_2$, $H_2Se$, $Se0_2$, $CS_2$, $P_2S_5$, or mixtures thereof.

**15**. A method according to claim **1**, wherein the step of promoting at least a portion of the available sorbent material occurs at least partially outside of the mercury containing gas.

**16**. A method according to claim **1**, wherein the promoted brominated sorbent combines with at least 70% of the mercury present in the mercury containing gas.

**17**. A method according to claim **1**, further comprising injecting the particulate sorbent material at a sorbent material injection rate and injecting separately the bromine containing promoter into a gas stream whereby in-flight reaction produces the promoted brominated sorbent, wherein the promoter is reacted in the gas phase or as a vapor, wherein the promoter is added at from about 1 to about 30 grams per 100 grams of the sorbent material.

**18**. A method according to claim **17**, wherein the gas stream is a mercury containing gas.

**19**. A method according to claim **18**, wherein the gas stream is a transport gas.

**20**. A method according to claim **17**, wherein the promoter injection rate and the sorbent injection rate into the gas are determined at least in part on the monitored mercury content of the cleaned gas.

**21**. A method according to claim **1**, wherein the composition of the promoted sorbent is controlled by the mercury content of the cleaned gas stream.

**22**. A method according to claim **1**, wherein the bromine containing promoter comprises at least one of HBr, $PBr_3$, or $Br_2$.

**23**. A method according to claim **1**, wherein the bromine containing promoter comprises molecular bromine.

**24**. A method according to claim **1**, wherein the bromine containing promoter comprises a bromine compound.

**25**. A method according to claim **1**, wherein the bromine containing promoter comprises a Group V or Group VI bromide.

* * * * *

JS 44 (Rev. 06/17)

# CIVIL COVER SHEET

The JS 44 civil cover sheet and the information contained herein neither replace nor supplement the filing and service of pleadings or other papers as required by law, except as provided by local rules of court. This form, approved by the Judicial Conference of the United States in September 1974, is required for the use of the Clerk of Court for the purpose of initiating the civil docket sheet. *(SEE INSTRUCTIONS ON NEXT PAGE OF THIS FORM.)*

## I. (a) PLAINTIFFS

Midwest Energy Emissions Corp. and MES Inc.

**(b)** County of Residence of First Listed Plaintiff Delaware County, OH
*(EXCEPT IN U.S. PLAINTIFF CASES)*

**(c)** Attorneys *(Firm Name, Address, and Telephone Number)*
James M. Lennon, Devlin Law Firm LLC
1526 Gilpin Ave, Wilmington, DE 19806,
(302) 449-9010, jlennon@devlinlawfirm.com

## DEFENDANTS

See attached list of Defendants

County of Residence of First Listed Defendant
*(IN U.S. PLAINTIFF CASES ONLY)*

NOTE: IN LAND CONDEMNATION CASES, USE THE LOCATION OF THE TRACT OF LAND INVOLVED.

Attorneys *(If Known)*

## II. BASIS OF JURISDICTION *(Place an "X" in One Box Only)*

- ❒ 1 U.S. Government Plaintiff
- ☒ 3 Federal Question *(U.S. Government Not a Party)*
- ❒ 2 U.S. Government Defendant
- ❒ 4 Diversity *(Indicate Citizenship of Parties in Item III)*

## III. CITIZENSHIP OF PRINCIPAL PARTIES *(Place an "X" in One Box for Plaintiff and One Box for Defendant)*
*(For Diversity Cases Only)*

| | PTF | DEF | | PTF | DEF |
|---|---|---|---|---|---|
| Citizen of This State | ❒ 1 | ❒ 1 | Incorporated *or* Principal Place of Business In This State | ❒ 4 | ❒ 4 |
| Citizen of Another State | ❒ 2 | ❒ 2 | Incorporated *and* Principal Place of Business In Another State | ❒ 5 | ❒ 5 |
| Citizen or Subject of a Foreign Country | ❒ 3 | ❒ 3 | Foreign Nation | ❒ 6 | ❒ 6 |

## IV. NATURE OF SUIT *(Place an "X" in One Box Only)*

Click here for: Nature of Suit Code Descriptions.

**CONTRACT**
- ❒ 110 Insurance
- ❒ 120 Marine
- ❒ 130 Miller Act
- ❒ 140 Negotiable Instrument
- ❒ 150 Recovery of Overpayment & Enforcement of Judgment
- ❒ 151 Medicare Act
- ❒ 152 Recovery of Defaulted Student Loans (Excludes Veterans)
- ❒ 153 Recovery of Overpayment of Veteran's Benefits
- ❒ 160 Stockholders' Suits
- ❒ 190 Other Contract
- ❒ 195 Contract Product Liability
- ❒ 196 Franchise

**REAL PROPERTY**
- ❒ 210 Land Condemnation
- ❒ 220 Foreclosure
- ❒ 230 Rent Lease & Ejectment
- ❒ 240 Torts to Land
- ❒ 245 Tort Product Liability
- ❒ 290 All Other Real Property

**TORTS**

**PERSONAL INJURY**
- ❒ 310 Airplane
- ❒ 315 Airplane Product Liability
- ❒ 320 Assault, Libel & Slander
- ❒ 330 Federal Employers' Liability
- ❒ 340 Marine
- ❒ 345 Marine Product Liability
- ❒ 350 Motor Vehicle
- ❒ 355 Motor Vehicle Product Liability
- ❒ 360 Other Personal Injury
- ❒ 362 Personal Injury - Medical Malpractice

**PERSONAL INJURY**
- ❒ 365 Personal Injury - Product Liability
- ❒ 367 Health Care/ Pharmaceutical Personal Injury Product Liability
- ❒ 368 Asbestos Personal Injury Product Liability

**PERSONAL PROPERTY**
- ❒ 370 Other Fraud
- ❒ 371 Truth in Lending
- ❒ 380 Other Personal Property Damage
- ❒ 385 Property Damage Product Liability

**CIVIL RIGHTS**
- ❒ 440 Other Civil Rights
- ❒ 441 Voting
- ❒ 442 Employment
- ❒ 443 Housing/ Accommodations
- ❒ 445 Amer. w/Disabilities - Employment
- ❒ 446 Amer. w/Disabilities - Other
- ❒ 448 Education

**PRISONER PETITIONS**

**Habeas Corpus:**
- ❒ 463 Alien Detainee
- ❒ 510 Motions to Vacate Sentence
- ❒ 530 General
- ❒ 535 Death Penalty

**Other:**
- ❒ 540 Mandamus & Other
- ❒ 550 Civil Rights
- ❒ 555 Prison Condition
- ❒ 560 Civil Detainee - Conditions of Confinement

**FORFEITURE/PENALTY**
- ❒ 625 Drug Related Seizure of Property 21 USC 881
- ❒ 690 Other

**LABOR**
- ❒ 710 Fair Labor Standards Act
- ❒ 720 Labor/Management Relations
- ❒ 740 Railway Labor Act
- ❒ 751 Family and Medical Leave Act
- ❒ 790 Other Labor Litigation
- ❒ 791 Employee Retirement Income Security Act

**IMMIGRATION**
- ❒ 462 Naturalization Application
- ❒ 465 Other Immigration Actions

**BANKRUPTCY**
- ❒ 422 Appeal 28 USC 158
- ❒ 423 Withdrawal 28 USC 157

**PROPERTY RIGHTS**
- ❒ 820 Copyrights
- ☒ 830 Patent
- ❒ 835 Patent - Abbreviated New Drug Application
- ❒ 840 Trademark

**SOCIAL SECURITY**
- ❒ 861 HIA (1395ff)
- ❒ 862 Black Lung (923)
- ❒ 863 DIWC/DIWW (405(g))
- ❒ 864 SSID Title XVI
- ❒ 865 RSI (405(g))

**FEDERAL TAX SUITS**
- ❒ 870 Taxes (U.S. Plaintiff or Defendant)
- ❒ 871 IRS—Third Party 26 USC 7609

**OTHER STATUTES**
- ❒ 375 False Claims Act
- ❒ 376 Qui Tam (31 USC 3729(a))
- ❒ 400 State Reapportionment
- ❒ 410 Antitrust
- ❒ 430 Banks and Banking
- ❒ 450 Commerce
- ❒ 460 Deportation
- ❒ 470 Racketeer Influenced and Corrupt Organizations
- ❒ 480 Consumer Credit
- ❒ 490 Cable/Sat TV
- ❒ 850 Securities/Commodities/ Exchange
- ❒ 890 Other Statutory Actions
- ❒ 891 Agricultural Acts
- ❒ 893 Environmental Matters
- ❒ 895 Freedom of Information Act
- ❒ 896 Arbitration
- ❒ 899 Administrative Procedure Act/Review or Appeal of Agency Decision
- ❒ 950 Constitutionality of State Statutes

## V. ORIGIN *(Place an "X" in One Box Only)*

- ☒ 1 Original Proceeding
- ❒ 2 Removed from State Court
- ❒ 3 Remanded from Appellate Court
- ❒ 4 Reinstated or Reopened
- ❒ 5 Transferred from Another District *(specify)*
- ❒ 6 Multidistrict Litigation - Transfer
- ❒ 8 Multidistrict Litigation - Direct File

## VI. CAUSE OF ACTION

Cite the U.S. Civil Statute under which you are filing ***(Do not cite jurisdictional statutes unless diversity)***:
35 U.S.C. § 271

Brief description of cause:
Patent Inringement

## VII. REQUESTED IN COMPLAINT:

❒ CHECK IF THIS IS A **CLASS ACTION** UNDER RULE 23, F.R.Cv.P.

**DEMAND $**

CHECK YES only if demanded in complaint:
**JURY DEMAND:** ☒ Yes ❒ No

## VIII. RELATED CASE(S) IF ANY

*(See instructions)*: JUDGE _____ DOCKET NUMBER _____

DATE 07/17/2019

SIGNATURE OF ATTORNEY OF RECORD /s/ James M. Lennon

**FOR OFFICE USE ONLY**

RECEIPT # _____ AMOUNT _____ APPLYING IFP _____ JUDGE _____ MAG. JUDGE _____

# Defendants

Vistra Energy Corp.
IPH, LLC
Dynegy Inc.
Illinois Power Resources Generating, LLC
Dynegy Midwest Generation LLC
Dynegy Miami Fort, LLC
AEP Generation Resources Inc.
Southwestern Electric Power Co.
Cardinal Operating Company, LLC
AEP Texas Inc.
NRG Energy, Inc.
NRG Texas Power LLC
Midwest Generation EME, LLC
Midwest Generation, LLC
Talen Energy Corporation
Talen Energy Holdings, Inc.
Brandon Shores LLC
Talen Generation LLC
H. A. Wagner LLC
Arthur J. Gallagher & Co.
Gallagher Clean Energy, LLC
AIG Coal, LLC
DTE REF Holdings, LLC
DTE REF Holdings II LLC
CERT Coal Holdings LLC
CERT Holdings LLC
CERT Holdings 2018, LLC
CERT Operations LLC
CERT Operations II LLC
CERT Operations III LLC
CERT Operations IV LLC
CERT Operations V LLC
CERT Operations RCB LLC
Chem-Mod LLC
AIG Iowa Refined Coal LLC
Joppa Refined Coal LLC
Thomas Hill Refined Coal LLC
Wagner Coaltech LLC
Walter Scott Refined Coal LLC
Louisa Refined Coal, LLC
Belle River Fuels Company, LLC
Arbor Fuels Company, LLC
Portage Fuels Company, LLC
John Doe LLCs