US005999538A

United States Patent [19]

Haddock et al.

[11] **Patent Number: 5,999,538**

[45] **Date of Patent: Dec. 7, 1999**

[54] **METHOD AND APPARATUS FOR ARBITRATING DATA TRANSMISSION IN A CSMA/CD LAN**

[75] Inventors: **Steve Haddock**, Los Gatos; **Herb Schneider**, San Jose, both of Calif.

[73] Assignee: **Extreme Networks, Inc.**, Santa Clara, Calif.

[21] Appl. No.: **08/887,356**

[22] Filed: **Jul. 2, 1997**

Related U.S. Application Data

[60] Provisional application No. 60/021,088, Jul. 2, 1996.

[51] **Int. Cl.**[6] **H04L 12/413**

[52] **U.S. Cl.** **370/446**; 370/447; 370/461; 370/501

[58] **Field of Search** 370/442–444, 370/445–448, 501, 502, 910, 911, 461, 462, 463, 492

[56] **References Cited**

U.S. PATENT DOCUMENTS

5,305,320	4/1994	Andrews et al.	370/229
5,351,241	9/1994	Yehonatan	370/446
5,355,375	10/1994	Christensen	370/407
5,402,420	3/1995	Kobayashi	370/212
5,684,802	11/1997	Perreault et al.	370/448
5,699,515	12/1997	Berkema et al.	370/447
5,742,239	4/1998	Siloti	370/448
5,771,235	6/1998	Tang et al.	370/446
5,774,658	6/1998	Kalkunte et al.	395/200.6

OTHER PUBLICATIONS

Wayne Hayes and Mart L. Molle, "Solving Capture in Switched Two–Node Ethernets by Changing Only One Node," Proceedings of the 20th Annual Conference on Local Computer Networks, pp. 1–9, Oct. 17–18, 1995.

Mart L. Molle, "A New Binary Logarithmic Arbitration Method for Ethernet," Computer Systems Research Institute, University of Toronto, Tronoto, Canada, Technical Report CSRI–298, Apr. 1994.

"3Com Delivers PACE™ Desktop Multimedia Networking Technology,"http://www.3com.com/0files/releases/dec1895.html, Dec. 18, 1995.

Primary Examiner—Chau Nguyen
Assistant Examiner—Seema S. Rao
Attorney, Agent, or Firm—Blakely Sokoloff Taylor & Zafman, LLP

[57] **ABSTRACT**

A repeater that prevents a node involved in a collision from detecting that the collision occurred, and transmits the data packet received from that node to all other nodes connected to the repeater. The repeater accomplishes this by repeating the data packet received from that node during the collision, and discarding the data packets received from other nodes, thereby allowing a valid data packet to traverse the repeater and all communication medium segments attached thereto. The repeater maintains a count of the collisions and retransmission attempts experienced by each node since that node's last successful data packet transmission. The count is used to prioritize which of the nodes involved in a subsequent collision will be allowed to continue to transmit. Such prioritization reduces any disparity in the number of retransmission attempts experienced by each node, thereby reducing the likelihood of a node dropping a data packet as occurs when the maximum number of retransmission attempts allowed for such node is reached.

10 Claims, 7 Drawing Sheets

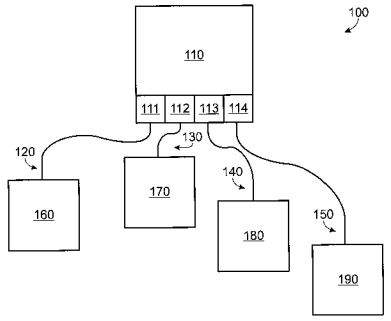

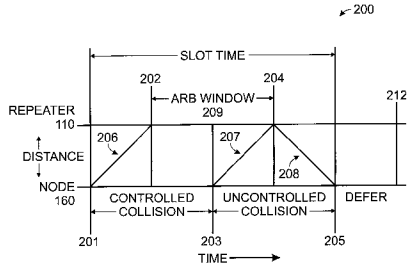

Fig. 1

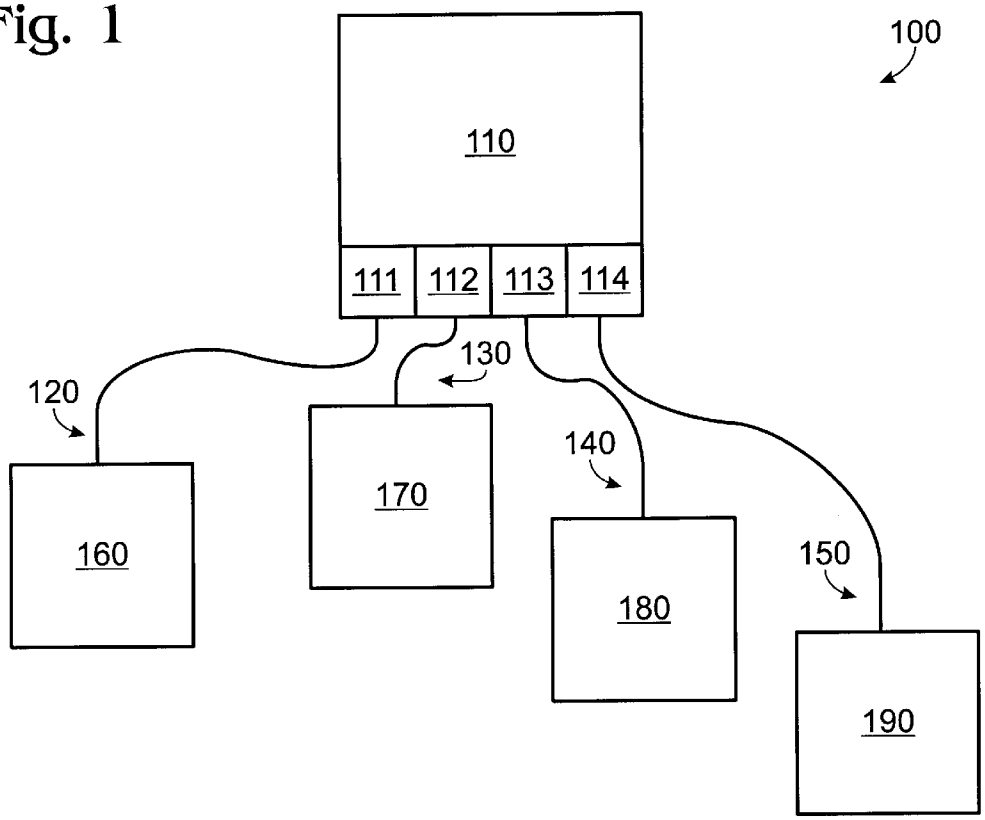
100
110
111
112
113
114
120
130
140
150
160
170
180
190

Fig. 2

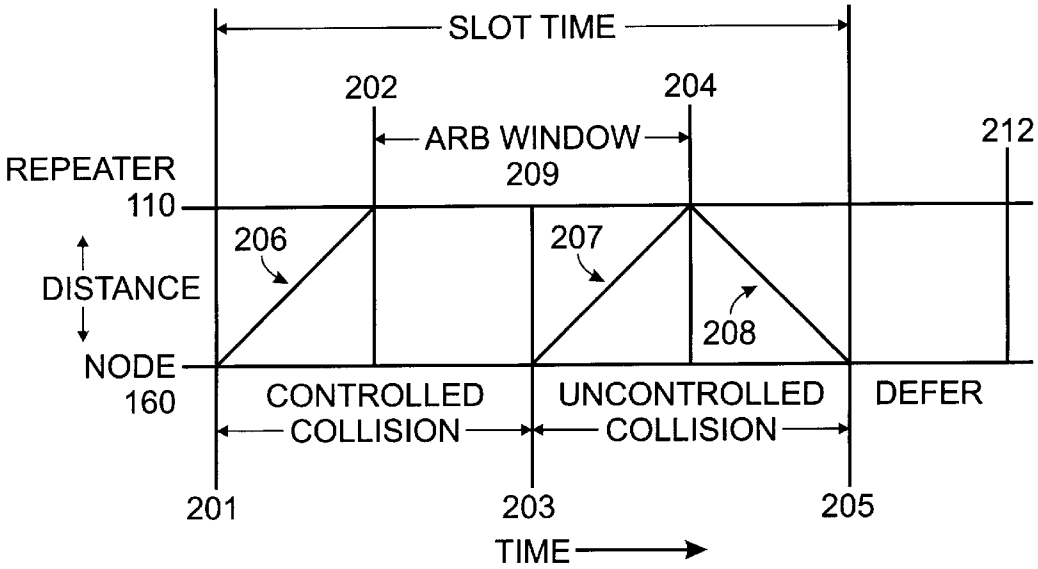
200
SLOT TIME
202
204
212
ARB WINDOW
209
REPEATER
110
206
207
208
DISTANCE
NODE
160
CONTROLLED
COLLISION
UNCONTROLLED
COLLISION
DEFER
201
203
205
TIME

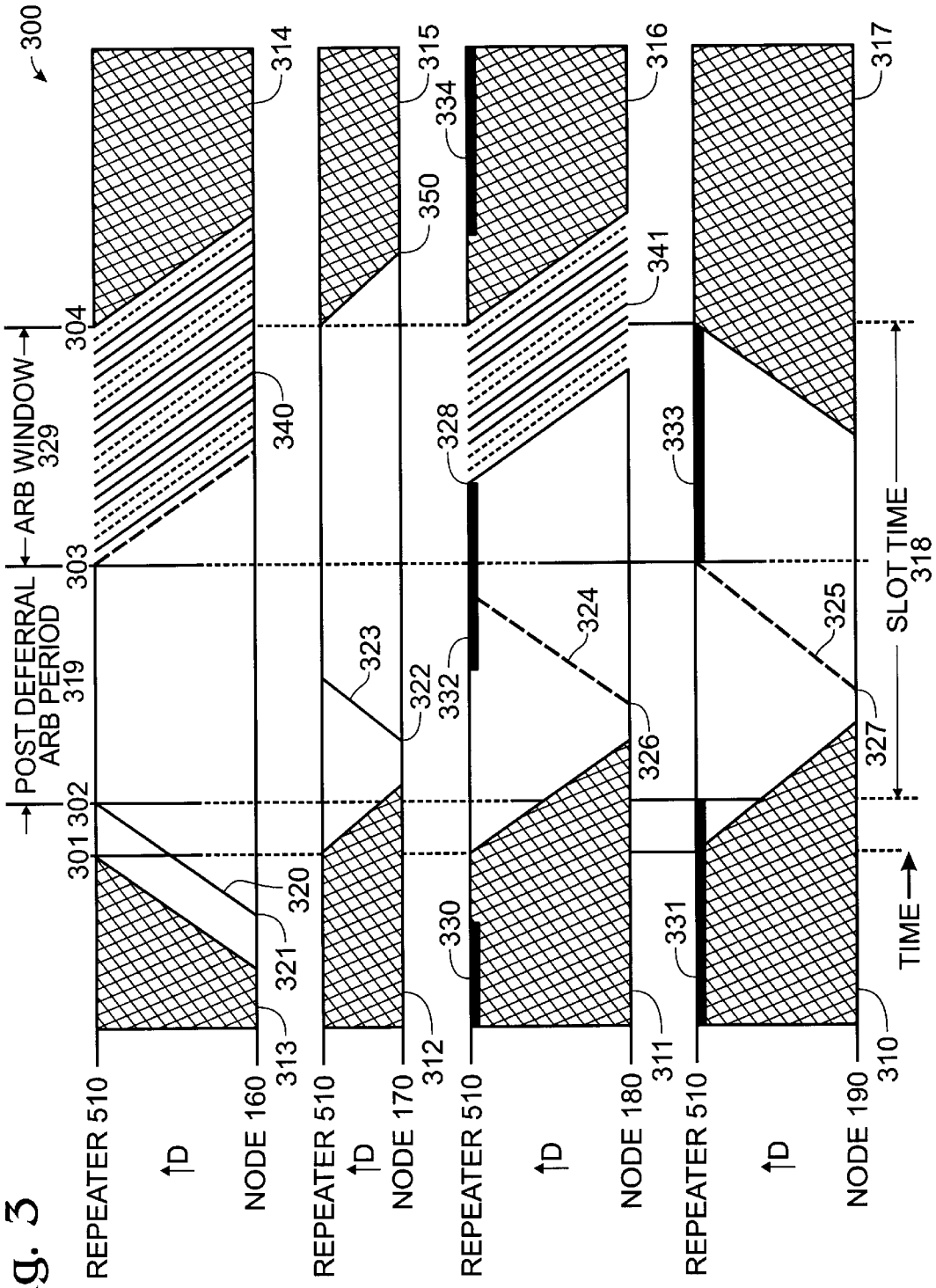
300
POST DEFERRAL ARB PERIOD 319
ARB WINDOW 329
301 302
303
304
REPEATER 510
D
NODE 160
NODE 170
NODE 180
NODE 190
310
311
312
313
314
315
316
317
320
321
322
323
324
325
326
327
328
330
331
332
333
334
340
341
350
SLOT TIME 318
TIME

Fig. 3

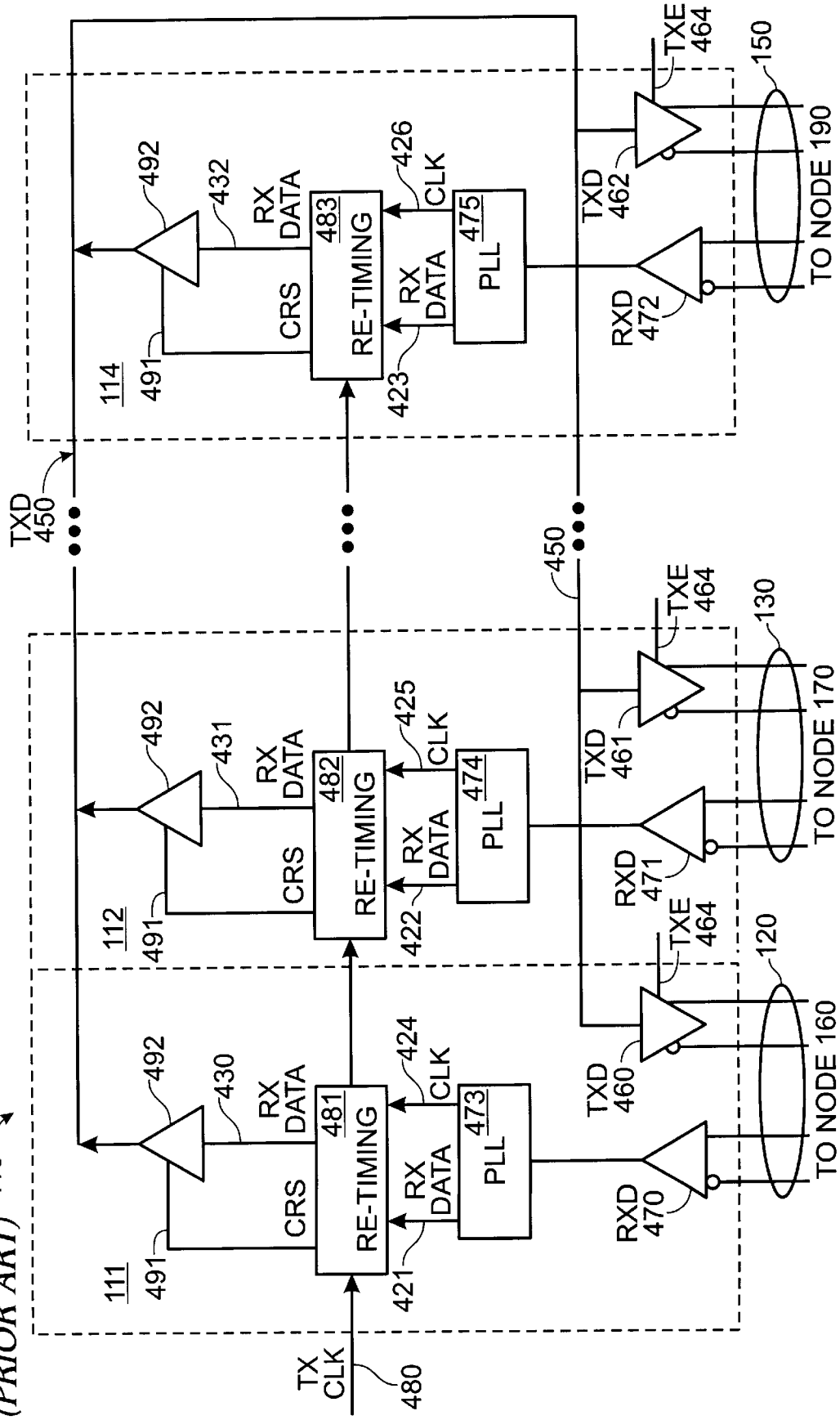

Fig. 4
(PRIOR ART)

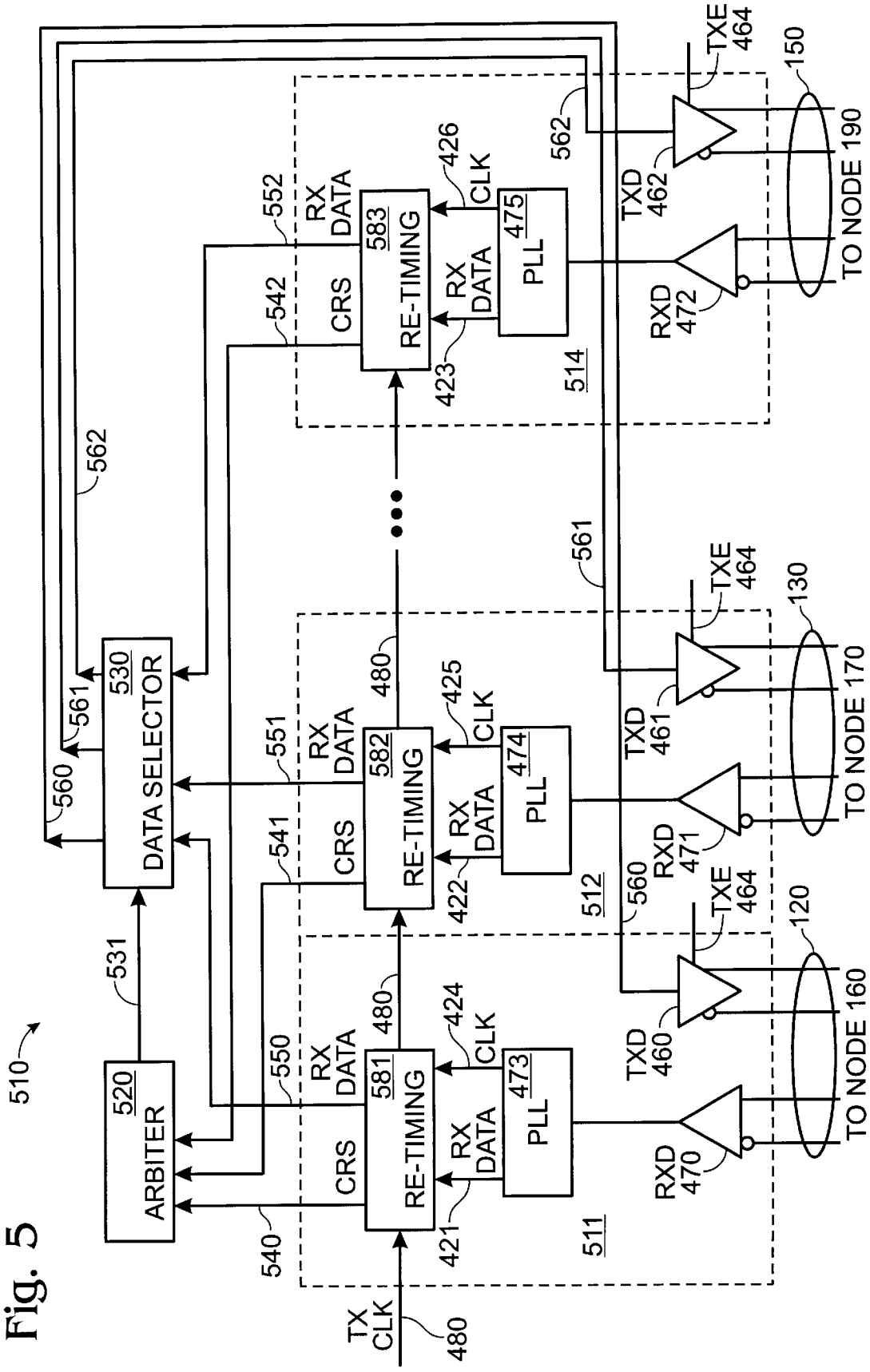
510
ARBITER
520
DATA SELECTOR
530
531
540
541
542
550
551
552
560
561
562
RE-TIMING
581
582
583
RX DATA
CRS
PLL
473
474
475
CLK
421
422
423
424
425
426
480
TX CLK
511
512
514
TXD 460
TXD 461
TXD 462
RXD 470
RXD 471
RXD 472
TXE 464
TO NODE 160
TO NODE 170
TO NODE 190
120
130
150

Fig. 5

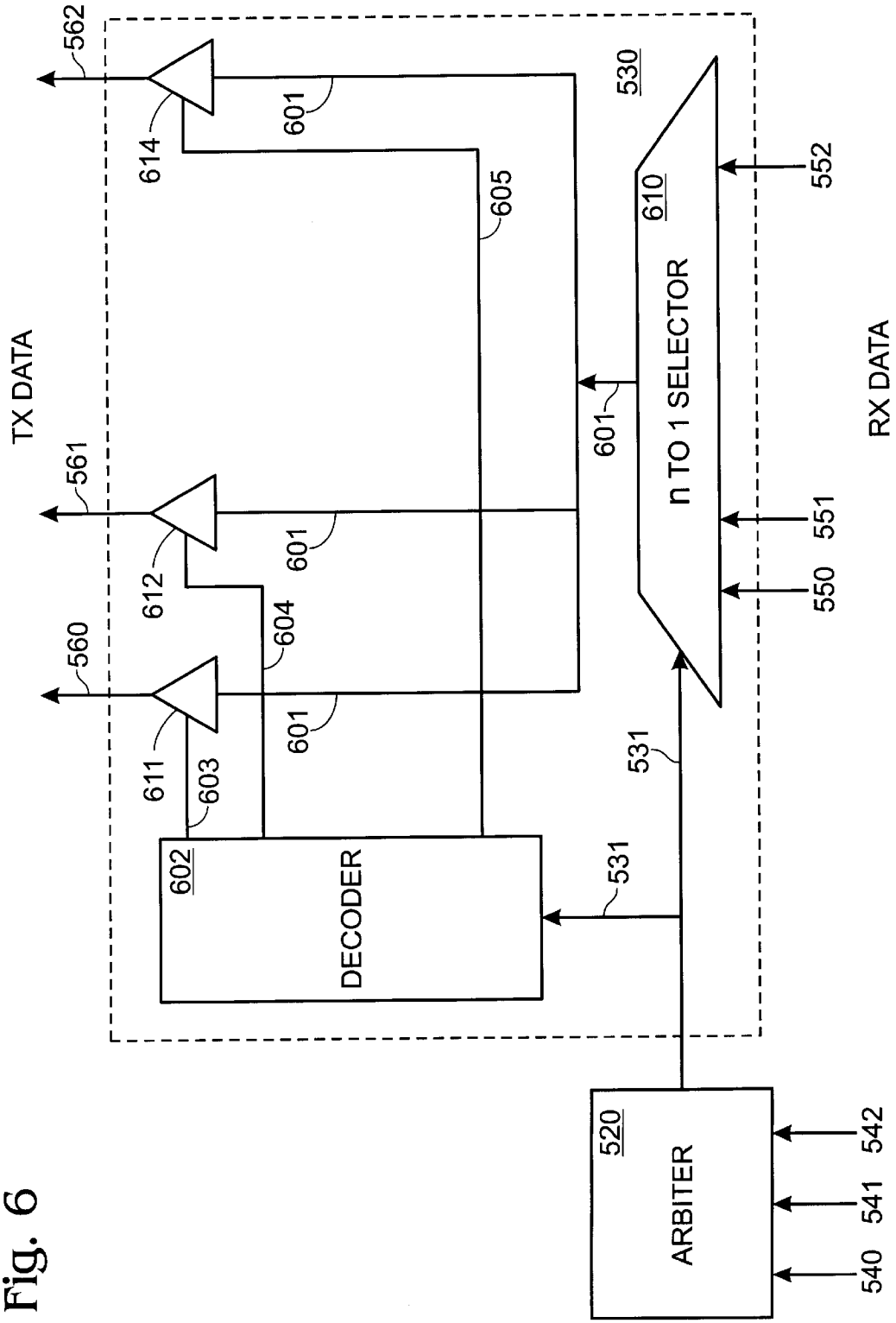
562
561
560
TX DATA
614
612
611
601
601
601
603
604
605
602
DECODER
531
531
601
530
610
n TO 1 SELECTOR
552
551
550
RX DATA
520
ARBITER
542
541
540

Fig. 6

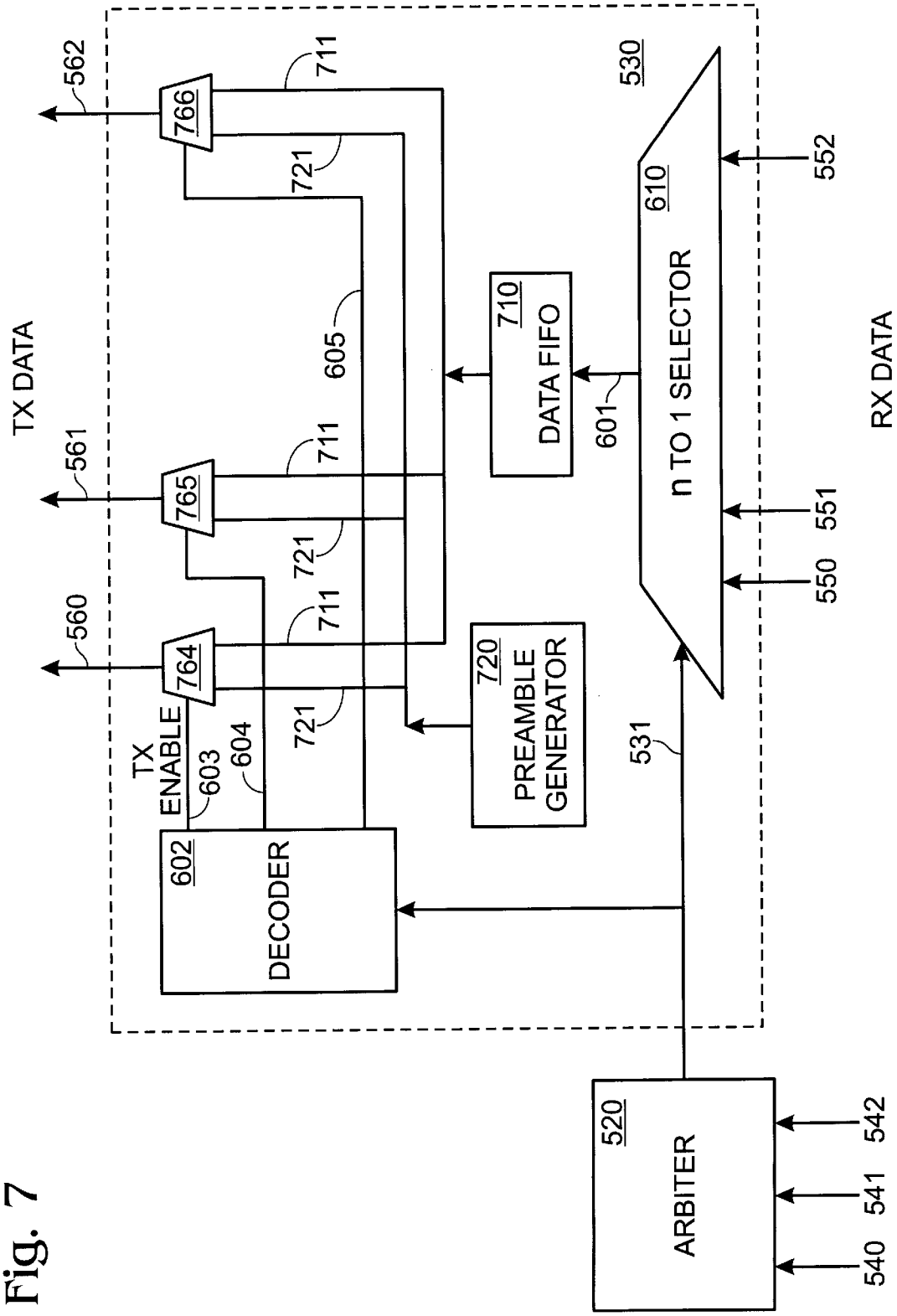
TX DATA
562
561
560
766
765
764
711
721
605
711
721
711
721
TX ENABLE
603
604
602
DECODER
710
DATA FIFO
720
PREAMBLE GENERATOR
601
530
610
n TO 1 SELECTOR
531
520
ARBITER
540
541
542
550
551
552
RX DATA

Fig. 7

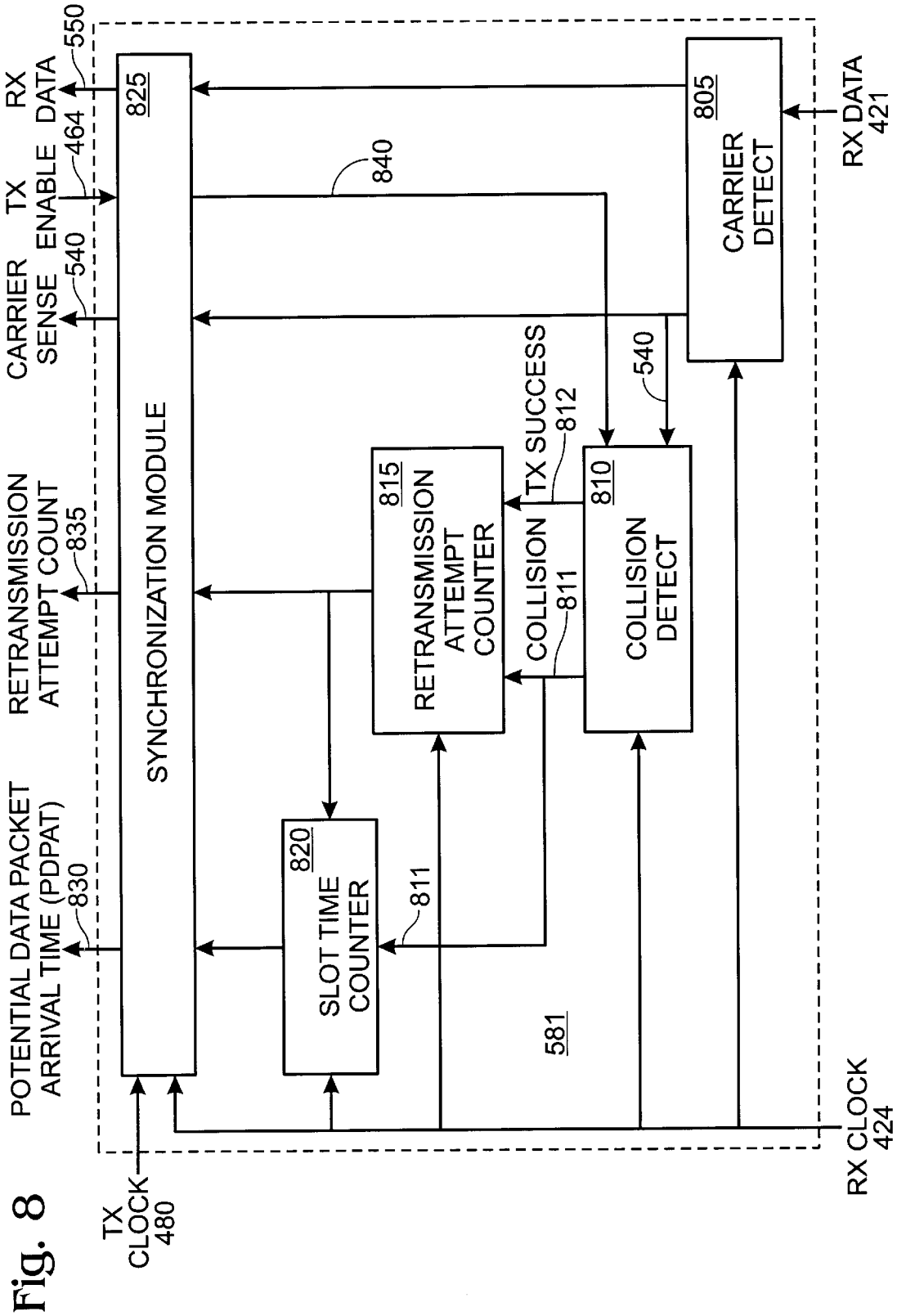
RX DATA
550
TX ENABLE
464
CARRIER SENSE
540
RETRANSMISSION ATTEMPT COUNT
835
POTENTIAL DATA PACKET ARRIVAL TIME (PDPAT)
830
TX CLOCK
480
825
SYNCHRONIZATION MODULE
820
SLOT TIME COUNTER
811
815
RETRANSMISSION ATTEMPT COUNTER
COLLISION
811
TX SUCCESS
812
810
COLLISION DETECT
540
840
805
CARRIER DETECT
RX DATA
421
581
RX CLOCK
424

Fig. 8

METHOD AND APPARATUS FOR ARBITRATING DATA TRANSMISSION IN A CSMA/CD LAN

This nonprovisional patent application claims the benefit of U.S. Provisional Application No. 60/021,088, filed Jul. 2, 1996, entitled, "DETERMINISTIC ACCESS CSMA/CD LAN REPEATER." This nonprovisional patent application is related to nonprovisional patent application Ser. No. 08/886,912, filed concurrently herewith, titled "A REPEATER PROVIDING FOR DETERMINISTIC ACCESS IN A LAN UTILIZING THE CSMA/CD MEDIUM ACCESS METHOD and nonprovisional patent application Ser. No. 08/887,355, filed concurrently herewith, titled "METHOD AND APPARATUS FOR PREDICTING AND CONTROLLING DATA TRANSMISSION IN A CSMA/CD LAN".

BACKGROUND OF THE INVENTION

1. Field of the Invention

The present invention is related to a Local Area Network (LAN) employing the Carrier Sense, Multiple Access with Collision Detection (CSMA/CD) Media Access Control (MAC) protocol, such as an IEEE standard 802.3 LAN or Ethernet LAN, hereafter collectively referred to as a CSMA/CD based LAN, or simply, CSMA/CD LAN. More specifically, the present invention is related to a repeating device, such as a repeater or hub, providing for deterministic access in a CSMA/CD LAN for up to and including 15 nodes each connected to the repeating device by way of a communication medium The repeating device further provides for a relatively shorter average media access latency than that provided by a prior art repeating device for a CSMA/CD LAN supporting greater than 15 nodes each connected to the repeating device by way of a communication medium.

2. Description of the Related Art

Ethernet and IEEE 802.3 are Local Area Network (LAN) standards that utilize the well known Carrier Sense, Multiple Access with Collision Detection (CSMA/CD) Media Access Control (MAC) protocol. The CSMA/CD MAC protocol provides an access method by which nodes connected to a shared communication medium may access the medium. Nodes are physically connected to the shared communication medium by way of what is commonly referred to as a Network Interface Card (NIC) or adapter. In a CSMA/CD LAN, a node's adapter contains means for communicating with other nodes according to the CSMA/CD MAC protocol. Two types of adapters are commonly utilized in CSMA/CD LANs: Ethernet adapters and IEEE 802.3 adapters. An Ethernet adapter supports transmitting and receiving Ethernet data packets in accordance with the CSMA/CD protocol, whereas an IEEE 802.3 adapter supports transmitting and receiving IEEE 802.3 data packets in accordance with the CSMA/CD protocol.

The initial communication medium used in a CSMA/CD LAN was a shared coaxial cable to which all nodes were attached in a bus topology. 10BASE5 and 10BASE2 provide the IEEE 802.3 Physical Layer specifications for a 10 million bits per second (Mbps) CSMA/CD LAN over coaxial cable. (See IEEE 802.3 clauses 8 and 10.) Such LANs were extended by connecting multiple communication medium segments together through one or more repeaters. However, the standards have evolved such that, today, a LAN is typically comprised of one or more hubs each providing a point-to-point connection to one of a plurality of

nodes via a communication medium, such as twisted pair telephone wiring or fiber-optic cable, in a star wired topology. 10BASE-T and 10BASE-F provide the IEEE 802.3 Physical Layer specifications for a 10 Mbps CSMA/CD LAN over twisted pair wiring and fiber optic cable, respectively. (See IEEE 802.3 clauses 14 and 15.)

A repeating device such as a repeater or hub provides repeating functionality between the nodes connected to the repeating device. Hereafter, the term repeater will be used to refer to the repeating device but it is understood that the term repeater as used herein includes both repeater and hub devices. The repeater connects multiple communication medium segments to form a single shared communication medium in which all nodes on all of the communication medium segments are peers such that only one node may successfully transmit a data packet at a time. Since the repeater provides a common shared communication medium between all communication medium segments connected to the repeater, when any two or more nodes in the LAN attempt to transmit a data packet simultaneously, a collision occurs according to the CSMA/CD MAC protocol. Thus, in a CSMA/CD LAN utilizing one or more repeaters, all nodes in the LAN are said to be in the same collision domain. Each node involved in a collision stops transmitting their data packet and waits a period of time known as the backoff time before attempting to retransmit the same data packet. Each node determines its backoff time from a random number generator. If a node detects a collision on 16 consecutive retransmission attempts, then the data packet is discarded.

CSMA/CD LANs have had tremendous commercial success in the data communications market. However, one of the limitations of such LANs is the random backoff time that occurs when a node detects a collision according to the CSMA/CD MAC protocol. The media access latency experienced by a node in a CSMA/CD LAN, i.e., the delay incurred in an adapter receiving a data packet from a node and actually transmitting the data packet on to the medium, can be extremely variable and potentially very long depending on the random backoff time. Indeed, the media access latency may be infinite if the data packet is discarded due to excessive collisions.

Because a data packet may be discarded by a node in a CSMA/CD LAN due to excessive collisions, CSMA/CD LANs are said to be non-deterministic, indicating delivery of data is not guaranteed. The non-deterministic aspect of the access method employed by CSMA/CD LANs has limited the market acceptance of such LANs for delay sensitive applications such as factory automation, process control, real time voice and video traffic, and interactive multimedia.

What is needed is a LAN employing a media access method that guarantees delivery of data. Such an access method is said to be a deterministic access method because the maximum media access latency that a node may experience can be definitively determined. Prior attempts to provide for a deterministic media access method for nodes in a CSMA/CD LAN have focused on two approaches: (i) modify the random backoff time algorithm in the adapter associated with a node in order to coordinate retransmission attempts between nodes in a manner that reduces the likelihood of a particular node experiencing multiple consecutive collisions; and (ii) modify both the repeater(s) in the LAN and the adapter in each node so that collisions are avoided. The latter approach necessarily requires using means other than the CSMA/CD MAC protocol to arbitrate for the communication medium

A number of the prior art methods and apparatus addressing the non-deterministic limitations of the CSMA/CD

MAC protocol have centered around modifying the random backoff time algorithm utilized by the adapter installed in the nodes coupled to the LAN. The modified backoff time algorithms include the: (i) Binary Logarithmic Access Method (BLAM); (ii) Capture Avoidance Binary Exponential Backoff (CABEB) developed by Digital Equipment Corporation (DEC); and (iii) Priority Access Controlled Ethernet (PACE) developed by 3Com Corporation.

A disadvantage of the prior approaches to providing a deterministic media access method in a CSMA/CD LAN is that they require modifying the CSMA/CD MAC protocol as implemented in the adapter associated with each node in the LAN. Modifying the CSMA/CD MAC protocol creates its own set of problems. First, an adapter for use in a CSMA/CD LAN is manufactured according to an international standard (IEEE 802.3 and ISO 8802.3) or the de facto Ethernet standard, both of which specify use of the CSMA/CD MAC protocol. Therefore, any deviation from the standards involving modification of the CSMA/CD MAC protocol is likely to violate the standards and is thus likely to cause interoperability problems for nodes in which an adapter having a modified CSMA/CD MAC protocol is installed. For example, a node having an adapter operating in accordance with the CSMA/CD MAC protocol as specified by the IEEE 802.3 standard may not be able to communicate with a node having a non-standard adapter operating in accordance with a non-standard media access control protocol. Additionally, there is a very significant installed base of nodes having Ethernet and/or IEEE 802.3 compliant adapters that do not have the modifications necessary to provide deterministic access, and thus cannot benefit from the prior approaches. Therefore, what is needed is a deterministic access method for a CSMA/CD LAN that does not require modifying the CSMA/CD MAC protocol in a node's adapter.

Recently, the concept of a buffered repeater has been presented at study group meetings of the IEEE 802.3 standards Working Group by a representative of Packet Engines, Incorporated, as part of a collaborative effort involving several companies. Although both the preferred embodiment of the present invention and the buffered repeater buffer data, they differ significantly in both their objectives and their operation. The objective of the prior art buffered repeater is to extend the maximum distance between a node and a repeater in CSMA/CD LAN without increasing the slot time parameter of the LAN, but does so by removing the CSMA/CD MAC protocol in the adapter at the node, whereas an object of the present invention is to control media access latency for a node without modifying the MAC protocol utilized by the adapter in the node.

Thus, what is needed is a method and apparatus for a node to access the medium in a CSMA/CD LAN that does not require modifying the backoff algorithm or any other component of the adapter in the node. Furthermore, what is needed is a repeater that provides deterministic access in a CSMA/CD LAN for up to and including 15 nodes, and a relatively shorter average communication media access latency than possible in the prior art for a CSMA/CD LAN with more than 15 nodes.

SUMMARY OF THE INVENTION

The present invention is a repeater such as a repeater or hub, as utilized in a Carrier Sense Multiple Access with Collision Detection (CSMA/CD) based LAN, that provides deterministic access to a shared communication medium for a limited number of nodes (15 or less), and improves the nondeterministic access latency for 16 or more nodes (up to the maximum number of nodes allowed to be coupled to the repeater) without requiring any modification to the Network Interface Card (NIC) or adapter in each of the nodes.

Prior art repeaters are passive in the CSMA/CD media access control method. A port on a prior art repeater simply receives signals transmitted on a communication medium segment to which it is connected and repeats the signals to all other ports in the repeater. Each of these ports, in turn, transmit the signals on to the communication medium segments to which they are connected. A prior art repeater detects a collision, and ensures each node connected to repeater detects the collision, but does not control the occurrence of a collision in any way. In this respect, the prior art repeater is a passive device. Indeed, a prior art repeater forwards all incoming signals, whether they represent data packets, collision fragments, jam signals, or just noise. The repeater embodied by the present invention, however, takes an active role by preventing one of the nodes involved in a collision from detecting that a collision has occurred so that the node continues transmitting a data packet, while the other nodes involved in the collision backoff and attempt to retransmit their data packets at a later time. In essence, the repeater selects a node to continue transmitting a data packet in spite of a collision involving the node. Furthermore, when selecting which node shall continue transmitting, the repeater of the present invention gives priority to the node with the currently highest number of outstanding packet retransmission attempts. This reduces the average media access latency experienced by the nodes, and eliminates a well-known problem with the CSMA/CD MAC protocol known as the Capture Effect. Importantly, since the CSMA/CD MAC protocol embodied in the adapter in each node is unmodified, no deviation from the international standard IEEE 802.3 or the de facto Ethernet standard is required to practice the present invention. Moreover, the present invention is interoperable with all nodes having an adapter that operates in accordance with either standard.

There are several components of the repeater embodied in the present invention which independently improve the media access latency for nodes in a CSMA/CD LAN. Together, these components of the repeater allow the present invention to guarantee deterministic access to the communication medium for 15 or fewer nodes connected to the repeater, as discussed below.

The repeater of the present invention prevents a node involved in a collision from detecting that the collision occurred, and transmits the data packet received from that node to all other nodes connected to the repeater. The repeater accomplishes this by repeating the data packet received from that node during the collision, and discarding the data packets received from other nodes, thereby improving the performance of a CSMA/CD LAN by allowing a valid data packet to traverse the repeater and all communication medium segments attached thereto notwithstanding that a collision occurred.

The present invention further provides for the repeater to maintain a count of the collisions and retransmission attempts experienced by each node since that node's last successful data packet transmission. The count is used to prioritize which of the nodes involved in a subsequent collision will be allowed to continue to transmit. Prioritization is useful in reducing any disparity in the number of retransmission attempts experienced by each node, thereby reducing the likelihood of a node dropping a data packet as occurs when the maximum number of retransmission attempts for such node is reached.

When multiple nodes are waiting for another node to finish transmitting a data packet so that they can each attempt to begin transmitting a data packet (i.e., when multiple nodes are waiting until a carrier signal is no longer sensed), the time at which their data packets arrive at the repeater will vary according to the varying lengths of the communication medium between each of the nodes and the repeater. For the repeater to arbitrate among the nodes that begin transmitting, it is useful to receive the data packets from each of the nodes at the same time. Thus, the present invention provides a mechanism for automatically equalizing the transmission delay incurred due to the length of the communication medium from each node to the repeater. The present invention also provides an alternate method of accounting for the varying delay incurred due to varying cable length between each of the nodes and the repeater. The repeater buffers the data packet received from each node (or at least from whichever node currently has the highest priority) until sufficient time has elapsed to begin receiving a data packet from each node that is attempting to transmit a data packet during the current arbitration interval.

For each node, the repeater maintains a slot time counter which models the slot time counter for the adapter installed in or associated with that node. The backoff time following a collision is measured in increments of a slot time, so modeling the slot time counter for the adapter in a node allows the repeater to predict when it will receive a data packet from a node that is currently backed off. When a node has an opportunity to attempt transmitting a data packet at each slot time, the repeater determines if that node is going to attempt to transmit a data packet before making a final arbitration decision as to which node will be allowed to successfully transmit a data packet.

One of the advantages of the present invention is that it controls the media access latency for a node in a CSMA/CD LAN without requiring modification of the node's adapter. Additionally, the present invention allows one valid data packet to be transmitted during each collision, which eliminates wasted bandwidth during collisions and reduces the average number of retransmission attempts experienced by a node in the LAN. The present invention gives nodes with the highest number of retransmission attempts the highest priority when determining which node shall transmit a valid data packet during a collision. This reduces the probability of a node dropping a data packet due to excessive retransmission attempts, and dramatically reduces the average media access latency for nodes in the CSMA/CD LAN. For CSMA/CD LANs with 15 or fewer nodes, the present invention guarantees that data packets will not be dropped due to excessive retransmission attempts, thereby providing nodes with deterministic access to the medium to which they are connected.

BRIEF DESCRIPTION OF THE DRAWINGS

The present invention is illustrated by way of example and not limitation in the following figures. Like references indicate similar elements, in which:

FIG. **1** illustrates a LAN in which may be utilized the present invention.

FIG. **2** shows a "time-space diagram" of a communication medium segment between a node and a repeater as embodied in the present invention.

FIG. **3** is a time-space diagram showing the post-deferral arbitration for four nodes as embodied by the present invention.

FIG. **4** is a block diagram of a prior art repeater.

FIG. **5** is a block diagram of an embodiment of the repeater of the present invention.

FIG. **6** is a block diagram of certain aspects of logic in an embodiment of the repeater of the present invention.

FIG. **7** is a block diagram of additional aspects of logic in an embodiment of the repeater of the present invention.

FIG. **8** is a block diagram of certain aspects of logic in a retiming module as utilized by an embodiment of the repeater of the present invention.

DETAILED DESCRIPTION OF THE EMBODIMENTS OF THE INVENTION

The present invention is a repeater providing for deterministic access in a Local Area Network (LAN) utilizing the CSMA/CD medium access method. In the following description, numerous specific details are set forth in order to provide a thorough understanding of the present invention. It will be apparent, however, to one of ordinary skill in the art that the present invention may be practiced without these specific details. In other instances, well-known architectures, circuits, and techniques have not been shown to avoid unnecessarily obscuring the present invention.

CSMA/CD Operation and Definitions

In describing the operation of the present invention, it is helpful to begin with a review of the CSMA/CD MAC protocol and related terminology. A node is generally a computer system providing a user with access to the LAN or services for such user over the LAN. Thus, a node may be a client, server, workstation, bridge, switching hub, router, etc.

A node has at least one interface card, typically referred to as a Network Interface Card (NIC) or adapter, for connecting the node to the LAN and for transferring data to and from the LAN. More specifically, the adapter contains a Medium Attachment Unit (MAU) for physically connecting the adapter to a communication medium. When a node has a data packet to transmit, the adapter determines whether another node is currently transmitting on the LAN by checking for the presence of a carrier signal from the MAU. A carrier signal is sensed if at least one node is currently transmitting on the communication medium. If the LAN is idle, i.e., no nodes are currently transmitting on the communication medium, a node can begin transmitting a data packet immediately. If the LAN is busy, however, the node will defer until the current transmission completes and then begin transmitting a data packet after a fixed Inter-Packet Gap (IPG) time interval, e.g., 9.6 microseconds in a 10 Mbps CSMA/CD LAN.

When two or more nodes begin transmitting a data packet at the same time, a collision occurs. When a node detects a collision, it continues to transmit for a period of time to ensure all other nodes in the LAN detect the collision as well. This period of time is known as the jam time and the transmission that occurs during the jam time is known as a jam signal. After a node sends a jam signal for the duration of the jam time, the node then stops transmitting and backs-off for some time period prior to attempting to retransmit the data packet. The backoff time interval is determined by a random number selected from a range of numbers. The range increases by a factor of two for each retransmission attempt. If the number of retransmission attempts for a particular node reaches 16, the data packet is discarded due to excessive collisions. Importantly, each node involved in a collision is unsuccessful in transmitting a data packet. All such nodes must retransmit their respective data packet.

In saying that a collision occurs when two or more nodes transmit "at the same time", there is actually a window or

period of time during which two or more nodes can begin transmitting a data packet and cause a collision to occur. The size of the window depends on the maximum propagation time for a signal transmitted by a node to be received by all other nodes in the same collision domain. The maximum end to end propagation time is that amount of time for a signal transmitted by a node at one end of the communication medium to reach a node at the other end of the communication medium The propagation time accounts for the time required for a signal to travel through adapters, the communication medium, and one or more repeaters. The IEEE 802.3 standard defines a constant time interval known as the "slot time" to represent the worst case round trip propagation time between any two nodes in a maximum size LAN. (Slot time is measured in bit times so that it scales with the speed of the LAN, wherein one slot time equals 512 bit times in a 10 or 100 Mbps CSMA/CD LAN.) In fact, the slot time must be larger than the sum of the round-trip propagation time and the jam time.

To operate properly, a CSMA/CD LAN must be designed such that the worst case delay for a node to receive a signal transmitted from another node does not exceed one half slot time. It is thus appreciated that the slot time is a critical parameter for determining when and how collisions may occur. The backoff interval during which a node waits before attempting to retransmit a data packet following a collision is measured in slot time multiples.

Transmitting Through a Collision The present invention recognizes that present methods of wiring Ethernet and IEEE 802.3 LANs have eliminated the necessity of having all nodes cease transmitting when a collision occurs. The repeater of the present invention selects one node to continue transmitting when a collision occurs.

Initially, Ethernet and IEEE 802.3 LANs utilized a shared coaxial cable known as 10BASE5 or 10BASE2 (depending on the type of coaxial cable) as the communication medium to which all nodes were attached in a bus topology. When two or more nodes transmitted a data packet on the cable at the same time, the data packets interfered with each other such that they prevented the nodes from detecting a valid data packet on the cable. Therefore, when a collision was detected, all nodes were required to stop transmitting and attempt transmitting a data packet at a later time.

With the advent of 10BASE-T wiring, the shared coaxial cable was replaced by a set of point-to-point cables connecting each node individually to a port on a repeater such as a hub or repeater. For example, with reference to FIG. **1**, a LAN **100** is illustrated in which a repeater **110** is respectively connected via point to point communication medium segments **120**, **130**, **140** and **150** to nodes **160**, **170**, **180** and **190**. The repeater has multiple ports, each for connecting a node to repeater **110** via one of the communication medium segments. For example, port **111** connects repeater **110** to node **160** via communication medium segment **120**, and port **112** connects repeater **110** to node **170** via segment **130**. Likewise ports **113** and **114** connect repeater **110** to nodes **180** and **190** via segments **140** and **150**, respectively. In this way, repeater **110** can forward a data packet received from any of nodes **160** through **190** to all of the other nodes.

10BASE-T wiring provides a transmit pair and a receive pair of wires so that data packets being transmitted and received over the same point to point connection do not interfere with each other. Each pair operates as a separate channel for the transmission of a data packet. This is illustrated in FIG. **4**, wherein communication medium segments **120**, **130** and **150** are shown comprising both a transmit data channel and a receive data channel. A collision is detected by a 10BASE-T adapter in a node by sensing the simultaneous transmission of a data packet on the transmit channel and reception of a data packet on the receive channel, i.e., full duplex communication.

Thus, importantly, although the standard Media Access Control (MAC) sublayer functionality in a 10BASE-T adapter does not support full duplex functionality due to the collision detection circuitry therein, the 10BASE-T Physical layer specification for a 10 Mbps CSMA/CD LAN is capable of full-duplex operation, i.e., carrying data in both directions (to and from the node) simultaneously without corrupting data. (In fact, this full-duplex capability is implemented in the 100BASE-X Physical layer specification for a **100** Mbps CSMA/CD LAN and corresponding adapters.)

Before considering the repeater of the present invention, it is useful to describe a prior art 10BASE-T CSMA/CD LAN repeater **110** as illustrated in FIG. **4**. Prior art repeater **110** comprises multiple ports such as ports, **111**, **112** and **114**. For purposes of simplicity, only three ports are illustrated in FIG. **4**, however, a fourth or more ports such as port **113** shown in FIG. **1** may be included in repeater **110**. Each port is connected to a node via a communication medium segment comprised of two pairs of twisted pair telephone wiring: a receive pair and a transmit pair. Each pair operates as a separate channel. Each port has receive circuitry coupled to the receive channel for receiving data packets from the attached node and transmit circuitry coupled to the transmit channel for transmitting data packets to the attached node. For example, port **111** has receive circuitry **470** coupled to the receive channel of communication medium segment **120**, and transmit circuitry **460** coupled to the transmit channel of the same segment. Each port further comprises a phase lock loop (PLL), e.g., PLL **473** in port **111**, for recovering and separating a data and a clock signal from a received data packet

A common internal transmit data (TXD) bus **450** receives data packets from each port and forwards the data packets out the ports. Additional circuitry not shown drives transmit enable (TXE) signal **464** so that a data packet received on a particular port is transmitted out all ports other than the port from which the data packet was received. The common internal transmit data TXD bus **450** operates in accordance with the transmit clock **480**. Thus, retiming modules **481**, **482** and **483** in each port synchronize the data packets received from each port to the transmit clock **480** before such data is placed on TXD bus **450**. Each retiming module further detects carrier, which enables driving data received at the port on to TXD bus **450**. For example, when retiming module **481** detects carrier on port **111**, carrier sense (CRS) line **491** is asserted, thereby enabling logic **492**, which then forwards the data received at the port through logic **492** to TXD bus **450**, over which the data is then transmitted to the other ports. Although not supported by the circuitry in prior art repeater **110**, each port is capable of full duplex communication because the communication medium segment attached to each port is comprised of a separate transmit and receive pair, or channel.

The repeater of the present invention takes advantage of full duplex capability in a 10BASE-T CSMA/CD LAN by selecting a node to continue transmitting a data packet, and causing the repeater to forward the data packet to all other nodes without corrupting the data packet, even when a collision has occurred. When a collision occurs, the repeater discards data packets received from all nodes other than the selected node. Thus, the selected node does not receive any data packets from the other nodes and therefore fails to

detect that a collision has occurred. The other nodes receive the data packet from the selected node as a valid data packet while they are transmitting a data packet, causing them to detect a collision, backoff and attempt to transmit their respective data packet at a later time.

FIG. **5** illustrates a repeater **510** of the present invention, in which a valid data packet is transmitted by a selected node and forwarded by the repeater during a collision. Repeater **510** includes central arbitration circuitry, illustrated as arbiter **520**, and a data selector **530** in addition to the components and functionality described above in connection with prior art repeater **110**. Carrier sense (CRS) lines **540**, **541** and **542**, from ports **511**, **512** and **514**, respectively, are provided as input to arbiter **520**. Additionally, receive data lines **550**, **551** and **552** from ports **511**, **512** and **514** are provided as input to data selector **530**.

Arbiter **520** determines which of the ports is receiving a data packet by detecting the assertion of the carrier sense lines provided as input to the arbiter. If multiple ports sense carrier simultaneously, arbiter **520** determines which one of the ports has priority according to an some arbitration method (see discussion below) and outputs a signal over select line **531** that causes data selector **530** to select an input from receive data lines **550**, **551** or **552**. Data selector **530** outputs the data packet received from such receive data line on all transmit data lines except the transmit data line corresponding to the same port from which the receive data line was selected. For example, if ports **511** and **512** each receive a data packet simultaneously, both carrier sense line **540** output from port **511** and carrier sense line **541** output from port **512** are asserted. Arbiter **520** selects between port **511** and **512** based on an arbitration method. For example, suppose arbiter **520** selects between port **511** and **512** by considering the number of retransmission attempts by the node connected to each port

Upon selecting a arbitration winner, for example, node **160** connected to port **511**, arbiter **520** sends a signal over select line **531** indicating to data selector **530** from which receive data line, **550** or **551**, to receive a data packet. In the example, data selector **530** begins receiving a data packet from port **511** over receive data line **550** based on the signal output on select line **531**. Data selector **530**, in turn, begins to transmit the data packet being received from port **511** to port **512** and port **514** by forwarding the data packet on transmit data lines **561** and **562**, respectively. Importantly, data selector **530** does not send the data packet received on port **511**, nor the data packet received on port **512**, to transmit data line **560**, so a collision does not occur at node **160** connected to port **511**. In this way, the present invention provides for the ability to transmit a valid data packet by avoiding a collision that would have otherwise occurred. That is, node **160** connected to port **511** is prevented from detecting that a collision occurred and therefore completes transmission of the data packet.

Note, however, node **170** connected to port **512** does detect that a collision occurs because, in this example, as described above, a data packet is being received at port **512** from node **170** as the data packet received from node **160** is being transmitted, via line **561**, out port **512** to node **170**. Node **170** therefore stops transmission of its data packet and goes into backoff. In this manner, node **170** connected to port **512** and node **190** connected to port **514** receive a valid data packet from node **160** connected to port **511**.

FIG. **6** provides further detail of data selector **530**. A plurality of receive data lines, one from each retiming module corresponding to a port in repeater **510**, e.g., receive data lines **550–552**, are coupled to the input of an n-way selector **610**. N-way selector **610** selects one of the receive data lines as input based on a signal received over select line **531** from arbiter **520**. In the event multiple packets are being received concurrently by repeater **510**, arbiter **520** applies an arbitration scheme to determine from which receive data line to select a packet, e.g., based on the number of retransmission attempts by a node corresponding to the port from which a data packet is received. N-way selector outputs a data packet onto line **601**, which is provided as input to logic **611**, **612** and **613**. Logic **611**, **612** and **613** forward the data packet to ports **511**, **512** and **514** respectively over lines **560**, **561** and **562**. However, decoder **602** also receives select line **531** as input from arbiter **520** and enables all logic based thereon other than the logic gating transmission of the data packet to the port from which the data packet was received. For example, if a data packet is received on ports **511** and **512** and arbiter **520** arbitrates to receive the data packet received on port **511**, then arbiter **520** sends a signal over select line **531** causing n-way selector **610** to select receive data line **550** (corresponding to port **511**) as input. The data packet from port **511** is forwarded to each of logic **611**, **612** and **613**. Decoder **602**, having also received the signal sent by arbiter **520** over select line **531**, enables logic **612** and **614**, but not logic **611**, so that ports **512** and **514** transmit the data packet received from node **160** (attached to port **511**) to nodes **170** and **190** (respectively attached to ports **612** and **614**).

Alternatively, data selector **530** transmits a data packet out each of lines **560**, **561** and **562** and decoder **602** is coupled to and drives a signal on transmit enable lines associated with the transmit logic in each port, e.g., TXE line **464**. It will be appreciated by those of skill in the art, however, that implementations other than those described with respect to FIGS. **5** and **6** may be utilized without departing from the spirit and scope of the present invention.

Repeater Arbitration Method

In making a forwarding decision, the present invention gives priority to data packets received from nodes with the most retransmission attempts since their last successful transmission of a data packet. With reference to FIG. **8**, The repeater **510** embodied in the present invention associates a retransmission attempt counter with each port. For example, FIG. **8** illustrates a retransmission attempt counter (RAC) **815** in the retiming module **581** of port **511**. The RAC is reset to an initial value, e.g., zero, whenever the node connected to the port **511** associated with the RAC successfully transmits a data packet. The RAC is incremented each time the node connected to the port experiences a collision.

The repeater detects that a node has experienced a collision when the repeater receives a fragment of a transmission from the node while the repeater is forwarding a data packet to the node. The repeater selects the node with the highest retransmission attempt counter value to continue transmitting through a collision. Should two or more nodes have the same RAC value, the repeater selects a node based on an arbitration scheme such as round-robin, least recent transmission or least recent attempted transmission.

For example, with reference to FIG. **8**, retiming module **581** in port **511** comprises retransmission attempt counter **815**. When port **511** is transmitting a data packet, transmit enable (TXE) line **464** is asserted and provided as input to collision detect logic **810**. If at the same time, a data packet is being received on port **511** via receive data line **421**, carrier detect logic **805** forwards the data packet so received on to data selector **530** via receive data line **550** and,

importantly, notifies collision detect logic **810** via carrier sense line **540**. Collision detect logic, having both transmit enable line **464** and carrier sense line **540** asserted concurrently, detects a collision and notifies retransmission attempt counter **815** via collision detect line **811**. The value maintained in RAC **815** is thereby incremented by one. RAC **815** outputs the present value maintained therein on RAC line **835**, which may be provided as input to, for example, arbiter **520**. RAC **815** in port **511**, as well as other RACs in other ports in repeater **510**, provide such input to aid arbiter **520** in determining from which port repeater **510** should receive a data packet for forwarding to the other ports.

With further reference to FIG. **8**, when port **511** successfully receives a data packet transmitted by node **160**, RAC **815** is reset, e.g., to zero. In particular, if carrier sense line **540** is asserted and then unasserted while transmit enable line **464** remains unasserted, collision detect logic **810** recognizes a data packet was successfully transmitted by node **160** and received by port **511**. Accordingly, transmit success line **812** is asserted thereby resetting RAC **815**.

Arbitration Windows

As noted earlier, a collision occurs when two or more nodes each begin transmitting a data packet within a time interval dependent on the worst case end to end propagation time across the LAN. In a CSMA/CD LAN, this time interval is one half the slot time of the LAN. To effectively arbitrate between nodes, the repeater should determine which nodes will attempt to transmit a data packet within a given one half slot time interval, hereafter referred to as the "arbitration window." The present invention provides a means for a repeater to predict which nodes will transmit a data packet and in some cases control the reception of data packets transmitted from such nodes.

With reference to FIG. **1**, a LAN **100** is illustrated in which a repeater **110** is respectively connected via point to point communication medium segments **120**, **130**, **140** and **150** to nodes **160**, **170**, **180** and **190**. The repeater has multiple ports, each for connecting a node to repeater **110** via one of the communication medium segments. For example, port **111** connects repeater **110** to node **160** via communication medium segment **120**, and port **112** connects repeater **110** to node **170** via segment **130**. Likewise ports **113** and **114** connect repeater **110** to nodes **180** and **190** via segments **140** and **150**, respectively. In this way, repeater **110** can forward a data packet received from any of nodes **160** through **190** to all of the other nodes. Likewise, repeater **510** of the present invention, having ports **511**–**514** as illustrated in FIG. **5**, operates in a similar manner.

In the particular example set forth in FIG. **1**, communication medium segments **120** and **150** respectively connecting nodes **160** and **190** to repeater **110** are substantially the same length and together with repeater **1 10**, form a communication medium whose length is equal to the maximum length allowed by the IEEE 802.3 Physical layer specification for a CSMA/CD LAN. Thus, the round trip propagation delay between nodes **160** and **190** is equivalent to the slot time of LAN **100**. It is therefore appreciated that the end to end propagation delay between node **160** and node **190** is one half slot time, and the propagation delay between repeater **110** and either node **160** or node **190** is one quarter slot time. Node **180**, however, is connected to repeater **110** via a relatively shorter length communication medium segment **140**. Likewise, node **170** is connected via an even shorter length segment **130**. Thus, the round trip propagation delay between node **170** or **180** and any other node is less than the slot time of LAN **100**.

FIG. **2** shows a time-space diagram **200** of node **160** and repeater **510** as embodied by the present invention (which, for example, may replace repeater **110** in the network illustrated in FIG. **1**) connected via point to point communication medium segment **120**. The horizontal axis in the diagram indicates propagation time, in which time progresses horizontally from left to right. The vertical axis indicates distance along the length of segment **120** between node **160** and repeater **510**. If node **160** begins transmitting a first data packet at time **201**, the first data packet begins to arrive at repeater **510** at time **202**, as indicated by the slope of line **206**. This delay is attributed to the propagation time involved in node **160** transmitting the first data packet along the length of communication medium segment **120** connecting node **160** to repeater **510**. Likewise, if node **160** begins transmitting a second data packet at time **203**, the second data packet begins to arrive at repeater **510** at time **204**, as indicated by the slope of line **207**. Finally, if repeater **510** begins forwarding a third data packet at time **204**, the third data packet begins to be received at node **160** at time **205**, as indicated by the slope of line **208**.

The time interval between time **201** and time **203** represents the round-trip propagation time of communication medium segment **120** connecting node **160** and repeater **510**. Likewise, the time interval between **201** and **205** represents two round-trip propagation times for communication medium segment **120**. It is appreciated that the propagation time between node **160** and repeater **510** is dependent on factors such as the transmission speed and length of the communication medium connecting node **160** to the repeater. Given the length of communication medium segment **120** in the example point to point network set forth above, (i.e., a maximum length segment under CSMA/CD guidelines) the round trip propagation time of segment **120** is equivalent to one half slot time of LAN **100**, and two round trip propagation delays of segment **120** is equivalent to the slot time of LAN **100**.

In FIG. **2**, repeater **510** establishes an arbitration window **209** between times **202** and **204**. With reference to FIG. **7**, during this time interval, repeater **510** buffers a data packet being received from whichever node is a potential arbitration winner, according to, for example, the value of the retransmission attempt counter associated with the port to which the node is connected, into First In First Out (FIFO) data buffer **710**. At the end of arbitration window **209**, repeater **510** determines which node has priority based on, for example, the retransmission attempt counter associated with the node, and begins forwarding the data packet from that node to all other nodes at time **204**.

If a node begins transmitting a data packet between times **201** and **203**, the data packet begins to arrive at repeater **510** within arbitration window **209**. The window between times **202** and **204** is characterized as a controlled collision region because repeater **510** controls whether to begin forwarding a data packet transmitted by a node or intentionally cause a collision to occur with the node by forwarding data to it, e.g., a data packet received from another node or preamble generated by preamble generator **720**. At the end of arbitration window **209** (i.e., at time **204**), repeater **510** begins to forward a data packet from the node that is selected as the arbitration winner to all other nodes.

If a node begins transmitting a data packet between times **203** and **205**, the data packet begins to arrive at repeater **510** between times **204** and **212**, after repeater **510** has started forwarding a data packet from the node that is selected as the arbitration winner to all other nodes in LAN **100**. This region from time **204** to time **212** is characterized as an uncon-

trolled collision region because an attempted transmission by a node during this period is received by repeater **510** after arbitration window **209** is closed and during such time that repeater **510** is forwarding a data packet from the node that is selected as the arbitration winner to all other nodes. Thus, the data packet is not considered for forwarding by repeater **510**. Indeed, the transmission from repeater **510** to the node during this period causes a collision at the node, forcing the node to stop transmitting the data packet and back off. However, if a node attempts transmitting a data packet after time **205**, it senses carrier because repeater **510** is transmitting a data packet. In such case, the node defers transmitting a data packet until after carrier is no longer sensed.

A block diagram of an embodiment of the present invention is illustrated in FIG. **7**, in which arbiter **520** and decoder **602** drive selector inputs **603**, **604** and **605** to selectors **764**, **765**, and **766**, respectively. The selectors determine whether to begin forwarding a data packet received from a corresponding port via one of receive data lines **550**, **551** and **552**, or send preamble generated by preamble generator **720** to cause a collision at a node or, if the node is not transmitting a data packet, to cause the node to defer transmission of a data packet until the receive data line coupled to the node is idle.

Uncontrolled collisions prevent repeater **510** from strictly adhering to the arbitration rule that whichever node has the highest retransmission attempt count wins the arbitration. Although repeater **510** cannot predict with complete accuracy when a data packet transmitted from a node will, in fact, arrive at repeater **510**, it can predict likely times a data packet transmitted from the node will arrive by being cognizant of and recognizing the factors that determine when the node can transmit a data packet. In predicting likely times that it will receive a data packet transmitted from a particular node, repeater **510** can avoid uncontrolled collisions at such node before they otherwise occur. For example, if the node begins transmitting a data packet in the controlled collision region (between times **201** and **203**), the data packet begins to be received by repeater **510** during arbitration window **209** and is included in the arbitration. If, however, it is likely the node will begin transmitting a data packet during the uncontrolled collision region (between times **203** and **205**), then repeater **510** begins forwarding a data packet to this node at the beginning of arbitration window **209** (at time **202**) to prevent the node from transmitting a data packet during the uncontrolled collision region. The data packet being forwarded by repeater **510** begins to arrive at the node at time **203** and causes the node to defer rather than initiate transmitting a data packet, thus avoiding the uncontrolled collision.

Given that a node has a data packet ready to transmit, there are generally three conditions when the node can indeed transmit the data packet on the communication medium to which it is connected: 1) on sensing the medium is idle, 2) after deferring to a transmission from another node, i.e., on sensing the medium is idle after previously sensing carrier on the medium and waiting for the medium to return to idle, and 3) on the expiration of the backoff timer for the node, after a collision occurs on the medium.

With respect to the first condition enumerated above, repeater **510** does not detect when the communication medium to which a node is connected is idle, and thus cannot avoid an uncontrolled collision at that node, as may occur if the node transmits while the repeater is forwarding a data packet to the node. This is not critical, however, because, under this first condition, the retransmission attempt counter associated with the port on repeater **510** that is connected to the node has a value of zero. Thus, the node would not likely win, nor is it critical for it to win, arbitration based on, for example, the number of retransmissions attempted by the node.

As for the second condition, repeater **510** does not necessarily know when a node is deferring, but it can predict when it might receive a data packet from the node if it assumes the node is presently deferring. Given the maximum propagation delay for a data packet to travel from a node to the repeater **510** due to the length of the communication medium segment connecting the repeater and the node, the potential arrival time at the repeater of the data packet transmitted from the node is within, at most, a one half slot time interval following an Inter-Packet Gap (IPG) which IPG, in turn, follows the transmission of the last data packet on the LAN.

Likewise, in connection with the third condition enumerated above, repeater **510** does not know when the backoff timer for a node is going to expire, but it does know that the backoff timer for a node expires some integer multiple of slot times after the node detects a collision and backs off. Therefore, repeater **510** can predict when it might receive a data packet transmitted from the node within any slot time interval. Being able to predict the potential arrival time at the repeater of a data packet transmitted from a node following either the deferral by or backoff timer expiration for the node is sufficient for repeater **510** to substantially prevent uncontrolled collisions with any node whose associated retransmission attempt counter has a value greater than zero.

Predicting Backoff Timer Expiration

The present invention includes circuitry at each port of a repeater to model the backoff mechanism of a node connected to each port. With reference to FIG. **8**, the circuitry includes the collision detection mechanism (collision detect logic **810** and associated inputs and outputs) and retransmission attempt counter logic (RAC **815** and associated inputs and outputs) described above. In addition, the present invention maintains a slot time counter for each port,, e.g., slot time counter **820** in retiming module **581** associated with port **511**, wherein the slot time counter is incremented from 0 to 511 each slot time or until a collision occurs at the node connected to the port.

Whenever a collision is detected at the node connected to a particular port, the slot time counter associated with that port is reset to its initial value, e.g., zero. For example, slot time counter **820** receives an asserted signal over collision detect line **811** when collision detect logic **810** detects a collision at node **160**. The slot time counter then begins counting bit times from the end of the carrier signal received from the node. The slot time counter is clocked with a bit clock recovered from the bit stream received from the attached node (receive clock **424** in FIG. **8**). Given that the slot time in a CSMA/CD LAN is 512 bit times, the slot time counter is a nine-bit counter that rolls over from a count of 511 to zero at the end of each slot time interval. Every time the slot time counter rolls over to zero is a potential arrival time for a data packet from the node because the backoff algorithm utilizes a backoff period that is a multiple of the slot time of the LAN according to the CSMA/CD MAC protocol.

The most significant bit of the slot time counter is asserted for the latter half of the slot time, prior to the potential arrival time of a data packet Assertion of the most significant bit of the slot time counter likely indicates the potential arrival time of a data packet at the beginning of the next slot time from the node attached to the port with which the slot time

counter is associated. The assertion of the most significant bit (MSB) of the slot time counter is synchronized (e.g., by way of a synchronization module such as synchronization module **825** in retiming module **581** of port **511**) to a clock in repeater **510** (transmit clock **480**). The synchronized assertion of the slot time counter's MSB is then passed as a signal on a Potential Data Packet Arrival Time (PDPAT) line, e.g., PDPAT line **830**, to the central arbitration circuitry, e.g., arbiter **520**, in repeater **510**. For example, the retiming module **581** of port **511** asserts PDPAT line **830** each time the most significant bit of slot time counter **820** is set, indicating it is likely node **160** will transmit a data packet to port **511** at the beginning of the next slot time.

If the arbiter **520** opens an arbitration window while the PDPAT signal for a port is asserted, then repeater **510** may receive a data packet from the node attached to the port during the arbitration window. If the PDPAT signal associated with a port in the repeater is unasserted while the arbitration window is open, then repeater **510** begins forwarding a data packet (e.g., the preamble of a data packet) to the attached node, thus forcing the node to defer rather than initiate transmitting a data packet at that time, thereby avoiding an uncontrolled collision at the node.

Arbitration on an Idle LAN

LAN **100** is considered idle if repeater **510** is currently not receiving a data packet from any node, and more than one IPG plus one half slot time has elapsed since repeater **510** forwarded a data packet. In this event, repeater **510** waits until it begins to receive the start of a data packet from a node. If no other nodes are in backoff at this time, or if there are nodes in backoff and the PDPAT signal for each of such nodes is unasserted, then repeater **510** immediately forwards the data packet to all other nodes. However, if at least one node is backed off and its PDPAT signal is asserted, the repeater **510** opens an arbitration window.

While the arbitration window is open, repeater **510** sends the beginning of a data packet (e.g., the preamble) to any node whose corresponding PDPAT signal is unasserted to prevent such node from beginning to transmit a data packet. The arbitration window stays open until one half slot time has elapsed, or until the retransmission attempt counter associated with the node that is the current potential arbitration winner is greater than that of any node whose corresponding PDPAT signal is asserted, or until repeater **510** is either receiving a data packet from a node or sending preamble to all nodes. Repeater **510** then closes the arbitration window and makes the final arbitration decision.

Post Deferral Arbitration

Whenever a node is transmitting a data packet, any of the other nodes may be deferring. If a node is deferring, it will attempt to begin transmitting a data packet one IPG after such node detects the end of the data packet currently being transmitted. Because of the propagation delay between nodes in LAN **100**, there is an inherent arbitration period, hereafter referred to as a post deferral arbitration period, beginning one IPG interval after the end of a data packet is transmitted and continuing for one half slot time, during which a collision may occur. The post deferral arbitration period is separate from the arbitration window defined by the present invention, although the former does affect the latter, as described below.

From the perspective of repeater **510**, the earliest expected arrival time of another data packet from the node that just transmitted the last data packet is at the beginning of the post deferral arbitration period, i.e., after the IPG has elapsed following the last data packet transmitted on the LAN. The expected arrival time for a data packet from another node attached to a port of repeater **510** by a relatively short communication medium segment is shortly after the beginning of the post deferral arbitration period, due to the relatively short propagation delay associated with the relatively short communication medium. The worst case arrival time for a data packet from another node is at the end of the post deferral arbitration period for a node attached to repeater **510** by a maximum length communication medium segment, due to the propagation delay of the maximum length segment. Throughout the post deferral arbitration period, repeater **510** does not forward a data packet or send preamble to any node.

At the end of the one half slot time interval following an IPG, i.e., at the end of the post deferral arbitration period, repeater **510** does one of three things: i) if repeater **510** has not received a data packet from any node in LAN **100**, then the LAN is idle and repeater **510** waits to receive a data packet from a node; ii) if repeater **510** has received a data packet from one or more nodes, and there are no other nodes presently backed off whose PDPAT signal is asserted and whose associated retransmission attempt counter has a value greater than or equal to the current potential arbitration winner among the one or more nodes, then repeater **510** makes an arbitration decision, selecting one of the one or more nodes, and begins forwarding a data packet from the winning node to all nodes other than the selected node; or iii) if repeater **510** has received a data packet from one or more nodes and there is at least one node in backoff whose PDPAT signal is asserted and such node could win the arbitration, then repeater **510** opens an arbitration window for up to another one half slot time, i.e., in addition to and immediately following the post deferral arbitration period. During the arbitration window, repeater **510** sends preamble to any nodes whose PDPAT signal is unasserted so that they defer transmission. Repeater **510** closes the arbitration window under the same conditions described above in connection with arbitration in an idle LAN.

FIG. **3** provides a time-space diagram showing arbitration for each of nodes **160**, **170**, **180** and **190**. As with FIG. **2**, the horizontal axis in the diagram indicates propagation time, in which time progresses horizontally from left to right. The vertical axis indicates a distance, D, along the length of the corresponding communication medium segment between each node and repeater **510**. Recall from the above discussion that nodes **160** and **190** are respectively connected to repeater **510** via maximum length communication medium segments **120** and **150**, while nodes **170** and **180** have shorter connections to repeater **510** via segments **130** and **140**, respectively. Thus, the distance D between node **160** or **190** and repeater **510** is equal, whereas the distance between node **510** and repeater **510** is relatively shorter and the distance between node **170** and repeater **510** is shorter still. It is important to recall that while each node is connected to repeater **510** via a separate point to point communication medium segment, the repeater causes the segments to collectively function as a single communication medium over which only one node can successfully transmit a data packet at a time.

Again, referring to FIG. **3**,the shaded areas represent a data packet being transmitted by a node and forwarded by repeater **510** to all other nodes, e.g., shaded area **313** represents the in-progress transmission of a first data packet from node **160** to repeater **510**, while shaded area **312** represents the first data packet being forwarded by repeater **510** to node **170**, as indicated by the slope of the shaded areas. Likewise, shaded areas **311** and **310** represent the first

data packet being forwarded by repeater **510** to nodes **180** and **190**, respectively.

Further with respect to FIG. **3**, time **301** represents the time at which the end of the first data packet represented by shaded area **313** reaches repeater **510** and begins to be forwarded by the repeater to nodes **170**, **180**, and **190**. Time **302** represents, from the perspective of the repeater, the end of an IPG following transmission of the first data packet and the beginning of post deferral arbitration period **319**, which is one half slot time in duration, as discussed above, and thus elapses at time **303**. In the example illustrated in FIG. **3**, after an IPG following transmission of the first data packet, node **160** initiates transmission of a second data packet at time **321**, which begins to arrive at repeater **510** at time **302**, the beginning of post deferral arbitration period **319**. The propagation delay in such transmission is represented by the slope of line **320**. Repeater **510** buffers the second data packet in FIFO **710** during the post deferral arbitration period **319** while determining if another data packet arrives from one of nodes **170**, **180** and **190**.

Node **170** initiates transmission of a third data packet at time **322**, one IPG interval after it sees the end of the first data packet forwarded by repeater **510** from node **160**. Since node **160** has just completed transmitting the first data packet, it has the lowest priority of all nodes, so repeater **510** flushes the FIFO buffer of the second data packet it is receiving from node **160** and begins buffering the third data packet it is receiving from node **170**. The slope of line **323** indicates the propagation delay in connection with transmitting the third data packet over communication medium segment **130**. Note that while the slope of line **323** is identical to the slope of line **320**, indicating communication medium segments **120** and **130** operate at the same data transmission speed, the length of line **323** is shorter than line **320** commensurate with the shorter length of segment **130** relative to segment **120**. The dashed lines **324** and **325** beginning at times **326** and **327** each respectively illustrate the earliest potential transmission of a data packet from nodes **180** and **190** had they been deferring to the first data packet transmitted by node **160**.

Heavy lines on the repeater end of the communication medium connecting each of nodes **180** and **190** to repeater **510** indicate assertion of the respective PDPAT signal associated these nodes, e.g., the PDPAT signal for node **180** is asserted during a period of time represented by line **332**, whereas the PDPAT signal for node **190** is asserted for the period of time indicated by line **333**. Assertion of the PDPAT signal for node **190** as shown by line **333** represents the worst case timing since the PDPAT signal is first asserted at time **303**, i.e., at the end of post deferral arbitration period **319**. Because the PDPAT signals for nodes **180** and **190** are asserted during time periods **332** and **333** respectively, repeater **510** begins an arbitration window **329** at time **303** according to the present invention.

At the same time repeater **510** opens arbitration window **329**, it also starts sending preamble to node **160** as indicated by hatched area **340**, so that node **160** defers transmission of a data packet. Repeater **510** starts sending preamble to node **160** concurrent with the opening of arbitration window **329**, i.e., at time **303**, because sending the preamble any later could cause a late collision at node **160** (if node **160** began transmitting a data packet one half slot time after time **321**) in violation of the CSMA/CD MAC protocol.

In the example illustrated in FIG. **3**, as of time **303**, node **160** was the last node to transmit a data packet. Thus, causing node **160** to defer by transmitting preamble to it is not detrimental since repeater **510** has already determined node **160** will not win arbitration because node **170** has higher priority. However, even if node **170** had not initiated transmission of a data packet at time **322**, repeater **510** would still send preamble to node **160** to cause a collision at node **160**, so as to avoid a potential uncontrolled collision with nodes **170**, **180** or **190**.

Repeater **510** begins sending preamble to node **180**, as indicated by hatched area **341**, as soon as the PDPAT signal for node **180** is unasserted (depicted by the end of line **332** at time **328**) because no data packet has been received by repeater **510** from node **180**. This ensures that node **180** defers to whichever node ultimately wins the arbitration. A fourth data packet from node **190**, depicted by shaded area **317**, arrives at the end of arbitration window **329** (at time **304**) just as the PDPAT signal for node **190** is unasserted (depicted by the end of line **333** at time **304**). Since node **190** has higher priority than node **170**, node **190** wins the arbitration. (Unlike node **190**, node **170** was not backed off, so the associated retransmission attempt counter for node **170** has a value of zero as compared to a value of one for node **190**). Thus, repeater **510** begins to forward the fourth data packet received from node **190** to all other nodes, as illustrated by shaded areas **314**, **315** and **316**. The fourth data packet received from node **190** begins to arrive at node **170** at time **350**, approximately one slot time after node **170** began transmitting at time **322**, just in time to cause a collision at node **170**, but importantly, not a late collision.

Alternative Embodiments

When repeater **510** opens an arbitration window as described above, the total duration of the arbitration period, including both post deferral arbitration period **319** and arbitration window **329**, can be a full slot time **318**. Thus, when a node is selected as an arbitration winner and its data packet is forwarded, all other nodes detect a collision just before it can be considered a late collision. In an alternative embodiment, it is possible to provide a greater margin by synchronizing the arrival of a data packet from each node after a deferral period. This is accomplished by a serial-in-parallel-out shift register and multiplexer at the transmit and receive side of each communication medium segment. Repeater **510** uses the multiplexer to select the proper shift register output to give each segment the same delay as a maximum length segment.

Short-term Fairness and Deterministic Access

The traditional collision detection and backoff method employed by a CSMA/CD LAN provides fair media access for each node, at least when averaged over a fairly long time interval (equivalent to tens of thousands of data packets). Over a short time interval, however, the method provides an unfair advantage to those nodes with low retransmission attempt counts. This phenomena is known as the Capture Effect because it allows one node to effectively capture the medium and transmit multiple (sometimes thousands) of consecutive data packets without allowing other nodes to transmit any data packets. The arbitration mechanism of the present invention eliminates the Capture Effect by giving the arbitration advantage to nodes with high retransmission attempt counts. This provides both long-term and short-term fairness in media access. The Capture Effect is a major source of the potentially very long media access latencies experienced by nodes in a CSMA/CD LAN, so by eliminating the Capture Effect the present invention also significantly reduces the average media access latency for nodes in a CSMA/CD LAN.

The arbitration provided by the present invention further assures that the highest retransmission count that can be

reached by any node is equal to the number of nodes in the LAN. Consider a CSMA/CD LAN with eight nodes that all collide on every transmission. On the first transmission, one node continues to transmit through the collision while the other nodes backoff and increment their retransmission attempt count. On the next transmission, one of the nodes has a retransmission attempt count of 0 while the other seven nodes all have an attempt count of 1. Thus, the present invention selects one of those nodes with an attempt count of 1 to transmit through the collision. On the next transmission one node has an attempt count of 0, another node has an attempt count of 1, and the other six nodes have a retransmission attempt count 2. The present invention then selects one of the nodes with a retransmission attempt count 2. This process continues until the eighth transmission when each node will have a unique retransmission attempt count ranging from 0 to 7. The present invention selects the node with a retransmission attempt count of 7. On the ninth transmission, each node will again have a unique retransmission attempt count ranging from 0 to 7. The method embodied by the present invention has thus reached a steady state.

The above discussion implies that the highest retransmission attempt count that can be reached is one less than the number of nodes in the LAN, but recall that there is a post-deferral arbitration period where repeater **510** may have to cause a collision at the node that just completed successfully transmitting a data packet even though repeater **510** does not know for sure that one of the nodes in backoff will begin transmitting a data packet during the present slot time. This effectively means that a node that has just completed transmitting a data packet may immediately get its retransmission attempt count incremented from 0 to 1 without any other node transmitting a data packet or taking part in the collision. Therefore, the highest retransmission attempt count that can be reached by any node is equal to the number of nodes in the LAN.

The above example presents the worst case scenario in terms of number of collisions, in which all nodes experience a collision on every transmission attempt. In actuality, the likelihood of this scenario is quite small. As some of the nodes reach higher retransmission attempt counts, they are more likely to back off for a longer period of time, thus allowing the other nodes multiple opportunities to transmit a data packet. But when one of the nodes backs off for a long time, that effectively leaves seven nodes contending for the medium. The highest retransmission attempt count that can be reached with seven nodes is seven. The result is that even when each node is selecting a random backoff interval, the highest retransmission attempt count that can be reached by any node is equal to the total number of nodes. Given fifteen nodes, the highest attempt count is 15, and no node will ever discard a data packet due to reaching the excessive retransmission attempt count of 16. Thus, the absolute maximum access latency can be calculated, thereby providing deterministic access to the communication medium.

What is claimed is:

1. In a data network having a plurality of nodes coupled to a repeater, an improved repeater that prioritizes forwarding of data packets transmitted between the plurality of nodes coupled thereto, comprising:

a) a plurality of ports each coupled to a respective one of the plurality of nodes via a point to point communication medium segment, each port comprising:

i) collision detect logic for detecting a collision as when the node coupled to the port is concurrently attempting to transmit a data packet while receiving a data packet transmitted from the port; and

ii) retransmission attempt counter logic coupled to the collision detection logic, the retransmission attempt counter logic maintaining a count of retransmission attempts by the node coupled to the port, the count being incremented when a collision occurs, and reset when the node transmits a data packet; and

b) an arbitration logic for selecting one of the plurality of ports having the highest retransmission attempt count to receive a data packet transmitted from a corresponding one of the plurality of nodes.

2. The repeater of claim **1** wherein the arbitration logic further comprises logic for selecting one of at least two of the plurality of ports to receive a data packet when the corresponding retransmission attempt count associated with at least two ports is the same value.

3. In a point-to-point data network having a plurality of nodes, a repeater communicatively coupling the plurality of nodes, comprising:

a) a plurality of ports each coupled to one of the plurality of nodes for receiving and transmitting data therewith; and

b) a data selector having a plurality of inputs each coupled to one of the plurality of ports for receiving data therefrom, and a corresponding plurality of outputs each coupled to one of the plurality of ports for transmitting data thereto; the data selector further comprising:

i) input selection logic for selecting one of the plurality of inputs coupled to one of at least two of the plurality of ports that are concurrently receiving a data packet, from which to receive a data packet; and

ii) output selection logic for selecting all of the plurality of outputs, other than the output coupled to the port that is coupled to the selected input, to which to transmit the data packet; and

c) arbitration logic coupled to the input selection logic to control the input selection logic in selecting the one of the plurality of inputs based on an arbitration scheme in which a retransmission counter maintains a count of retransmission attempts by the one of the plurality of nodes coupled to the port, the count being altered to indicate a collision occurs, and reset when the one of the plurality of nodes transmits a data packet.

4. The repeater of claim **3**, wherein the arbitration logic is coupled to the output selection logic for controlling the output selection logic in selecting all of the plurality of outputs other than the output coupled to the port that is coupled to the selected input based on the arbitration scheme.

5. In a point-to-point data network having a plurality of nodes, a repeater communicatively coupling the plurality of nodes, comprising:

a) a plurality of ports each coupled to one of the plurality of nodes for receiving and transmitting data therewith;

b) a data selector having a plurality of inputs each coupled to one of the plurality of ports for receiving data therefrom, and a corresponding plurality of outputs each coupled to one of the plurality of ports for transmitting data thereto; the data selector further comprising:

i) input selection logic for selecting one of the plurality of inputs coupled to one of the plurality of ports, hereafter referred to as the selected input, from which to receive a data packet; and

ii) output selection logic for selecting all of the plurality of outputs, other than the output coupled to the port

that is coupled to the selected input, to which to transmit the data packet; and

c) arbitration logic coupled to the plurality of ports and the data selector for controlling the data selector in selecting one of the plurality of inputs based on an arbitration method in which a transmission counter maintains a count of transmission attempts by the one of the plurality of nodes coupled to the port, the count being altered to indicate a collision occurs, and reset when the one of the plurality of nodes transmits a data packet.

6. The repeater of claim **5**, wherein the arbitration logic is coupled to the output selection logic for controlling the output selection logic in selecting all of the plurality of outputs other than the output coupled to the port that is coupled to the selected input.

7. The repeater of claim **6**, wherein the arbitration method is a round robin arbitration method.

8. The repeater of claim **6**, wherein the arbitration method selects one of the plurality of inputs based on a number of retransmission attempts counted for the node coupled to the port.

9. The repeater of claim **6**, wherein the data selector further comprises logic coupled to the arbitration logic and input selection logic for selecting one of the plurality of inputs to select all of the plurality of outputs other than the output coupled to the port that is coupled to the selected input.

10. In a local area network- comprising a repeater having a plurality of ports and a corresponding plurality of nodes each coupled to a port via a point to point communication medium segment, a method for forwarding data packets to the nodes from the repeater, comprising the steps of:

a) detecting an idle condition in the local area network;

b) opening an arbitration window upon receiving a data packet at a port;

c) while the arbitration window is open:

i) receiving additional data packets at other ports;

ii) comparing each of the data packets according to a corresponding priority scheme in which a count of transmission attempts is maintained by each of the plurality of nodes, the count being altered to indicate a collision occurs and reset when a data packet is transmitted;

iii) buffering the data packet having a highest corresponding priority; and

d) forwarding the data having the highest corresponding priority when the arbitration window is closed.

* * * * *