US007201520B2

(12) **United States Patent**
Mizue et al.

(10) **Patent No.: US 7,201,520 B2**
(45) **Date of Patent: Apr. 10, 2007**

(54) **OPTICAL MODULE HAVING A SIMPLE MECHANISM FOR RELEASING FROM A CAGE**

(75) Inventors: **Toshio Mizue**, Kanagawa (JP); **Manabu Ishikawa**, Kanagawa (JP)

(73) Assignee: **Sumitomo Electric Industries, Ltd.**, Osaka (JP)

(*) Notice: Subject to any disclaimer, the term of this patent is extended or adjusted under 35 U.S.C. 154(b) by 0 days.

(21) Appl. No.: **10/854,208**

(22) Filed: **May 27, 2004**

(65) **Prior Publication Data**

US 2005/0018979 A1 Jan. 27, 2005

(30) **Foreign Application Priority Data**

May 30, 2003 (JP) 2003-155456
Sep. 19, 2003 (JP) 2003-329102

(51) **Int. Cl.**
G02B 6/36 (2006.01)

(52) **U.S. Cl.** **385/92**

(58) **Field of Classification Search** 385/92
See application file for complete search history.

(56) **References Cited**

U.S. PATENT DOCUMENTS

6,439,918 B1 8/2002 Togami et al.
6,447,170 B1 * 9/2002 Takahashi et al. 385/53
6,556,446 B1 * 4/2003 Hwang 361/728
6,744,963 B2 6/2004 Hwang
6,786,653 B1 * 9/2004 Hwang et al. 385/92
2003/0002823 A1 * 1/2003 Wu 385/92
2003/0072539 A1 * 4/2003 Huang et al. 385/92
2003/0072540 A1 * 4/2003 Huang 385/92
2003/0171022 A1 * 9/2003 Distad et al. 439/372
2004/0008954 A1 * 1/2004 Shaw et al. 385/92
2004/0033030 A1 * 2/2004 Ohbayashi et al. 385/88
2004/0062493 A1 * 4/2004 Ishigami et al. 385/92
2004/0105239 A1 * 6/2004 Chiang 361/728
2004/0197055 A1 * 10/2004 Fischer et al. 385/92
2004/0197056 A1 * 10/2004 Oki 385/92
2005/0100292 A1 * 5/2005 Malagrino, Jr. 385/92
2005/0117854 A1 * 6/2005 Chiu et al. 385/92

* cited by examiner

Primary Examiner—Ellen E. Kim
(74) *Attorney, Agent, or Firm*—Venable LLP; Michael A. Sartori

(57) **ABSTRACT**

The present invention provides an optical module having a pluggable configuration, which enables to latch with the cage when the optical connector is mated with the receptacle. The optical module of the present invention is secured in the cage by latching the latch of the cage and the projection of the module. The actuator of the module, having a slab protruding into the optical receptacle, is able to slide along the direction the module is inserted into the cage. When the optical connector is in the optical receptacle, the slab of the actuator butts the optical connector and is prohibited to slide, accordingly, the optical module can not released from the cage.

9 Claims, 12 Drawing Sheets

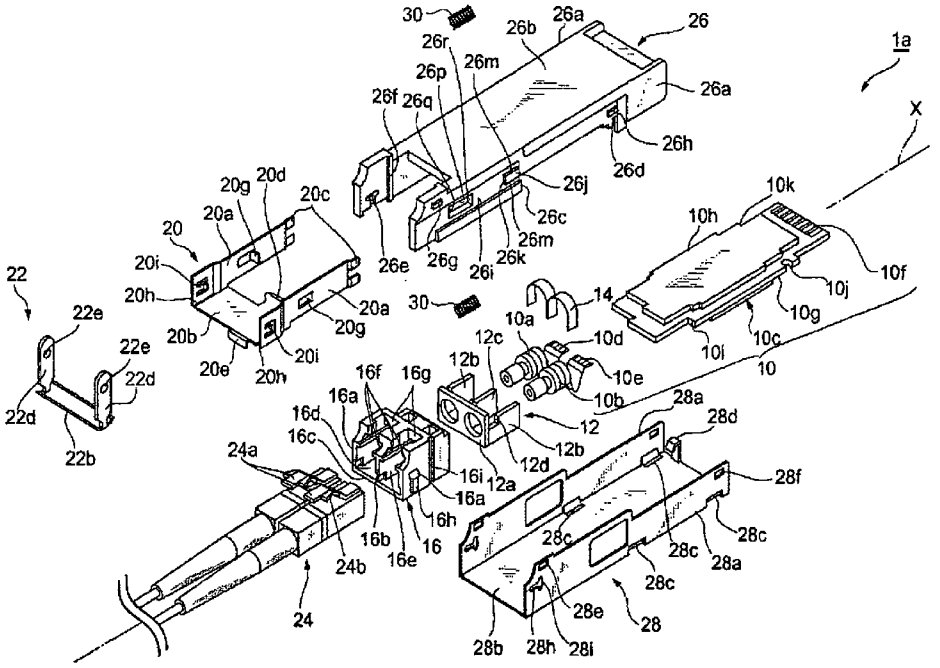

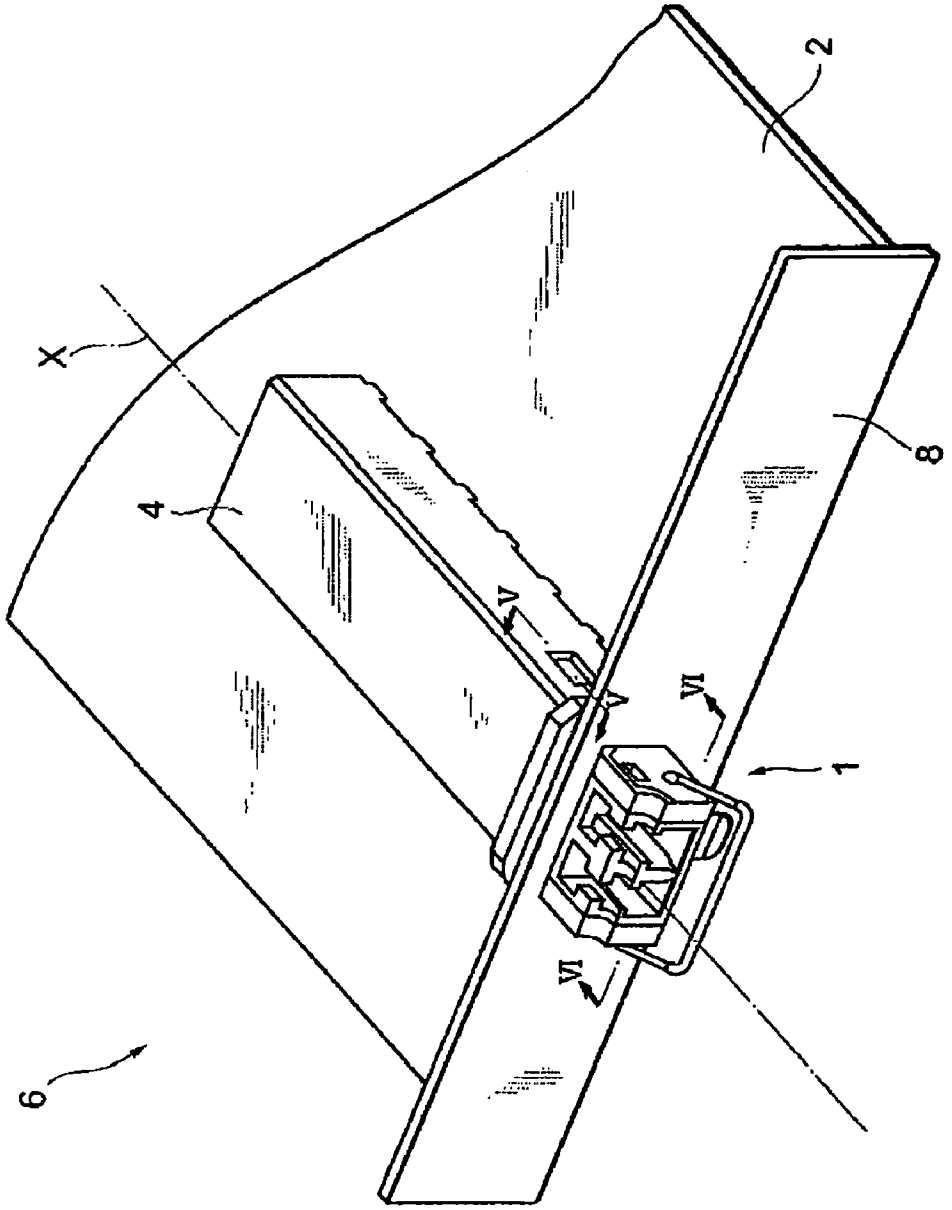

FIG. 1

FIG. 2

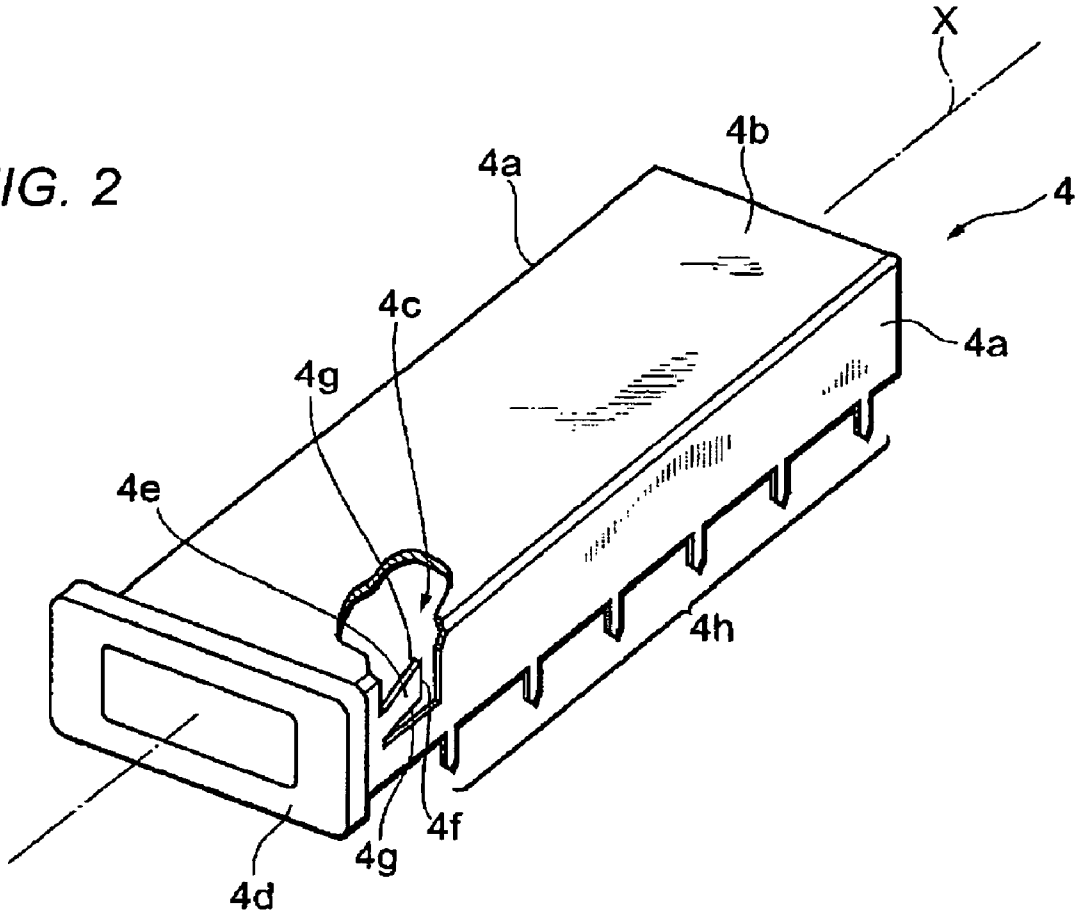

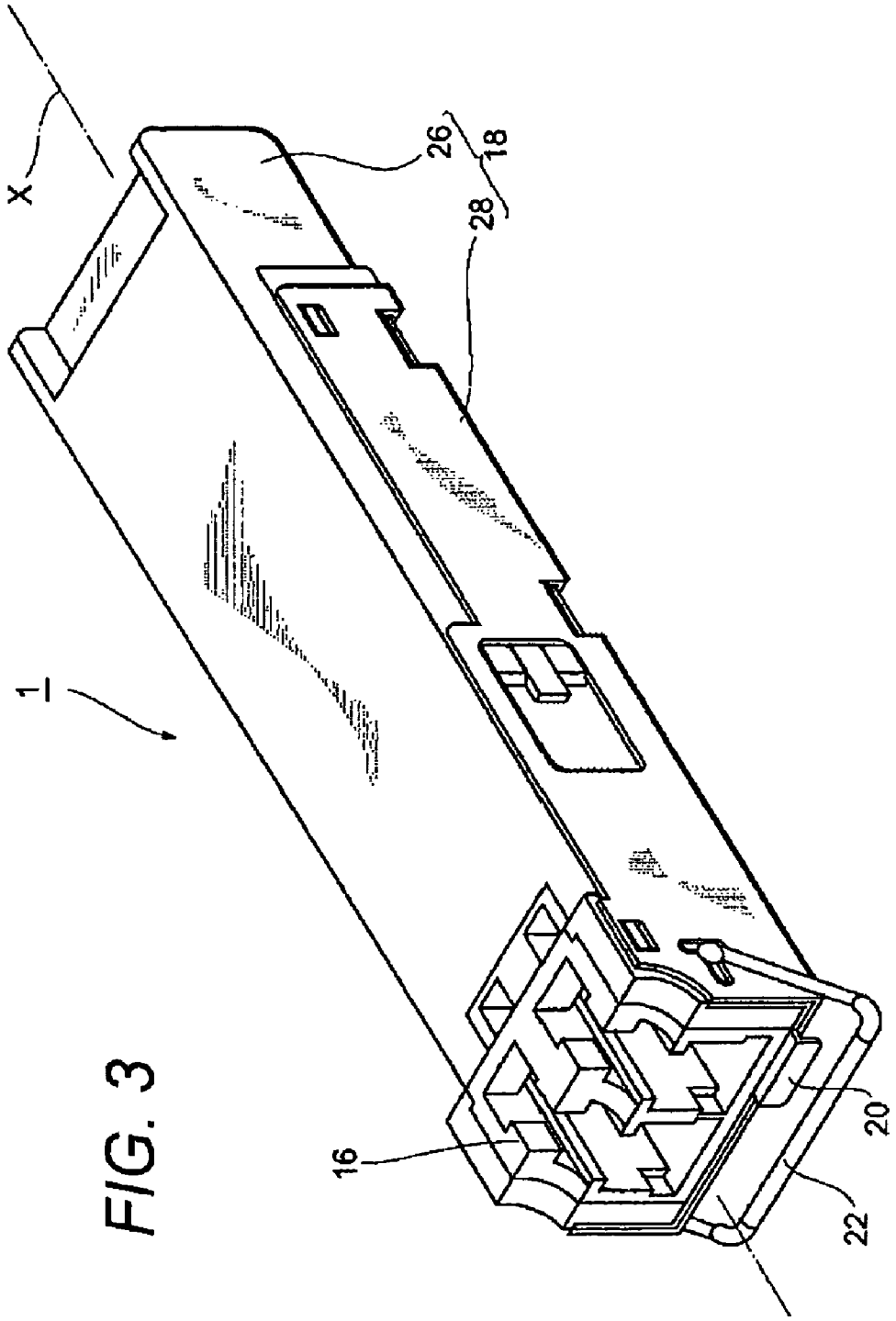

FIG. 3

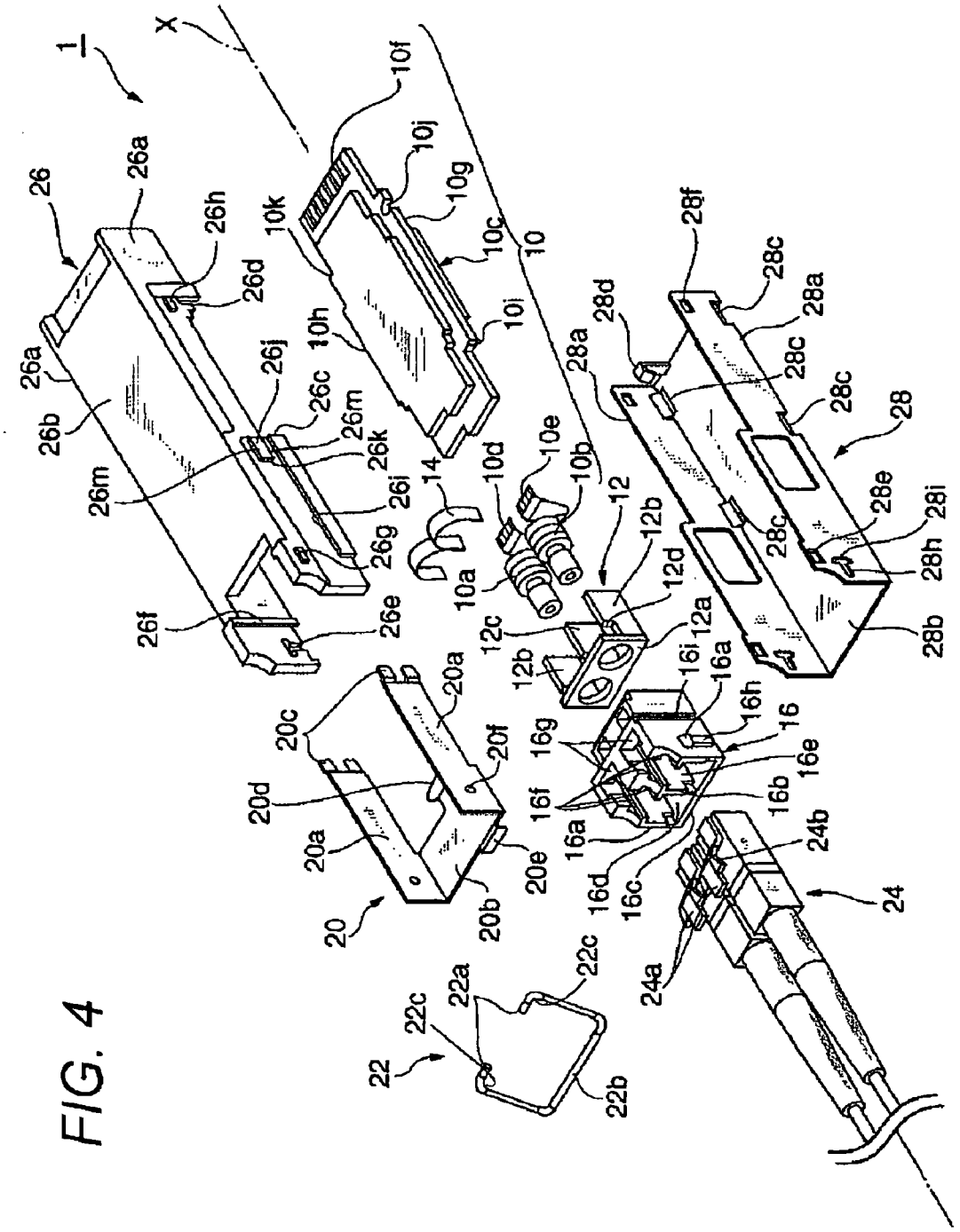
1
X
26
26a
26b
26c
26d
26e
26f
26g
26h
26i
26j
26k
26m
10
10a
10b
10c
10d
10e
10f
10g
10h
10i
10j
10k
14
12
12a
12b
12c
12d
28
28a
28b
28c
28d
28e
28f
28h
28i
20
20a
20b
20c
20d
20e
20f
16
16a
16b
16c
16d
16e
16f
16g
16h
16i
22
22a
22b
22c
24
24a
24b

FIG. 4

FIG. 5A

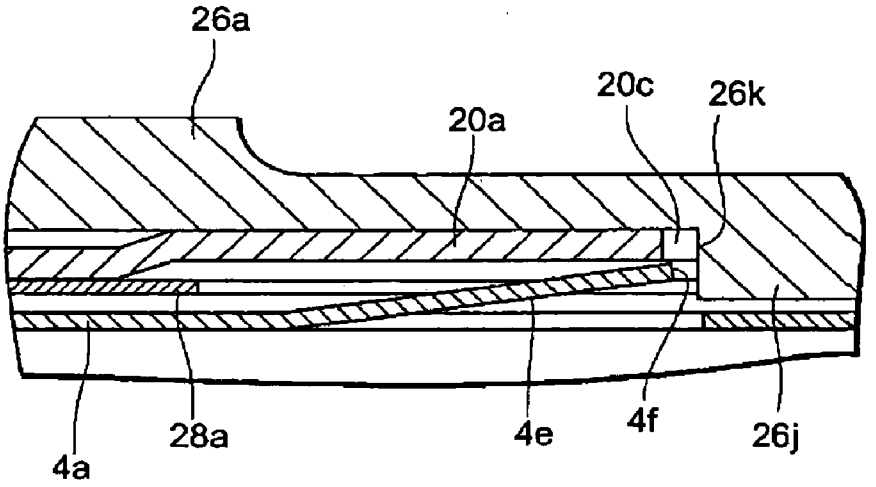

FIG. 5B

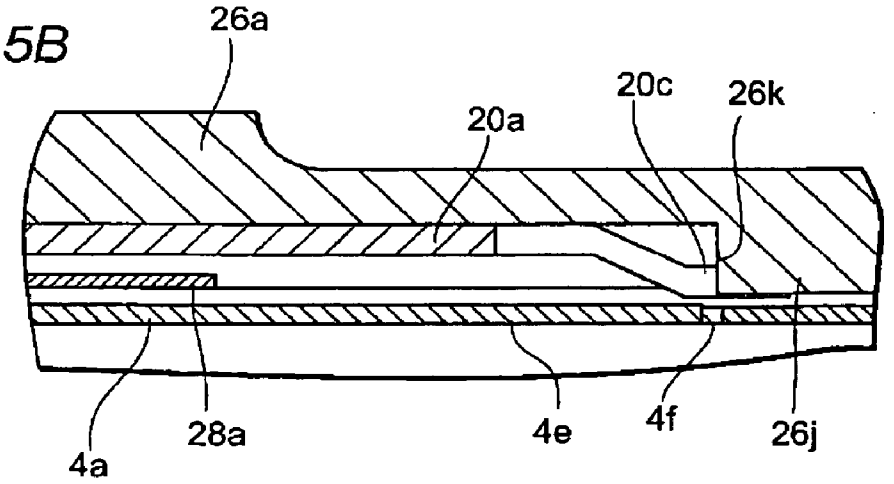

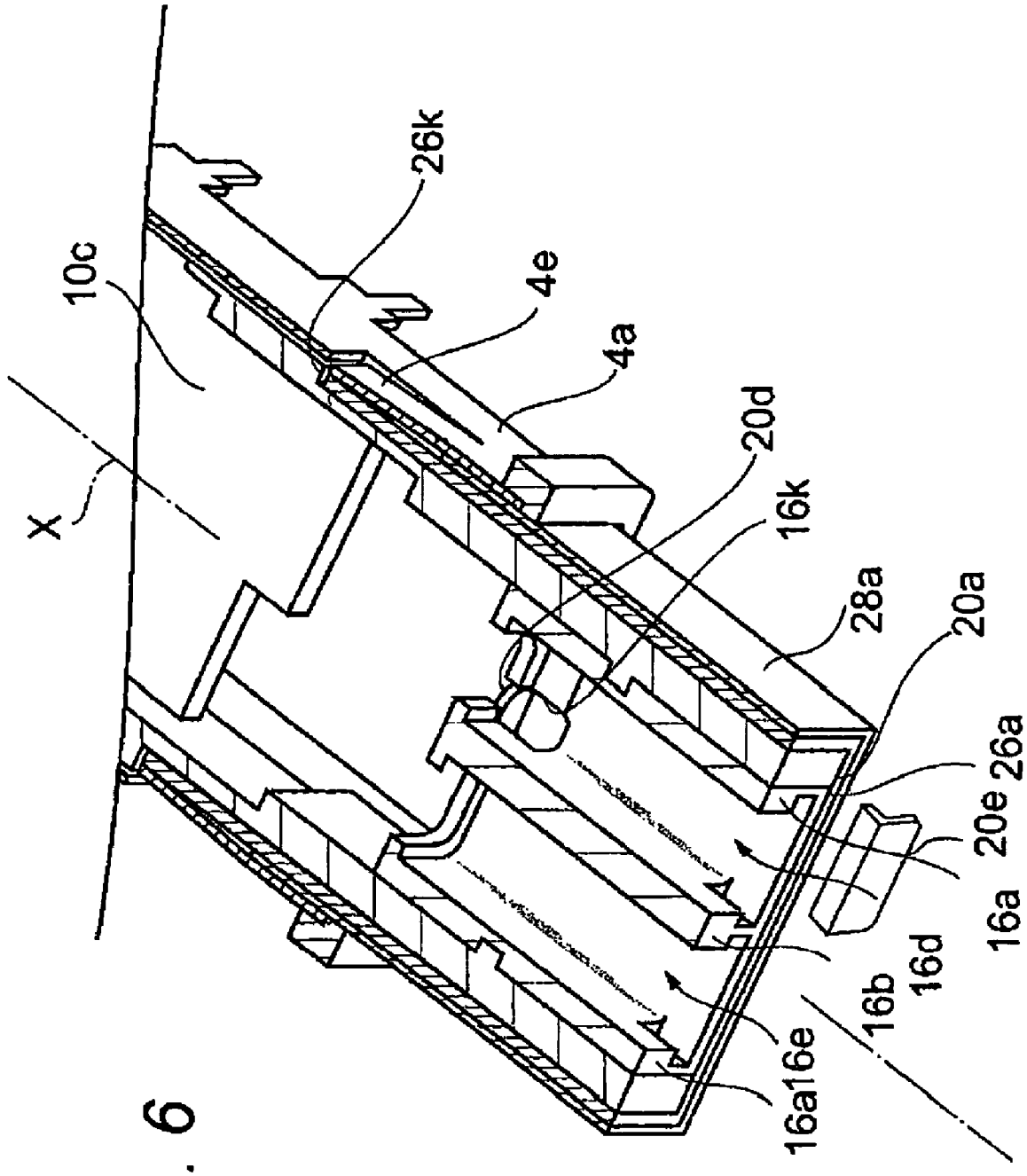

FIG. 6

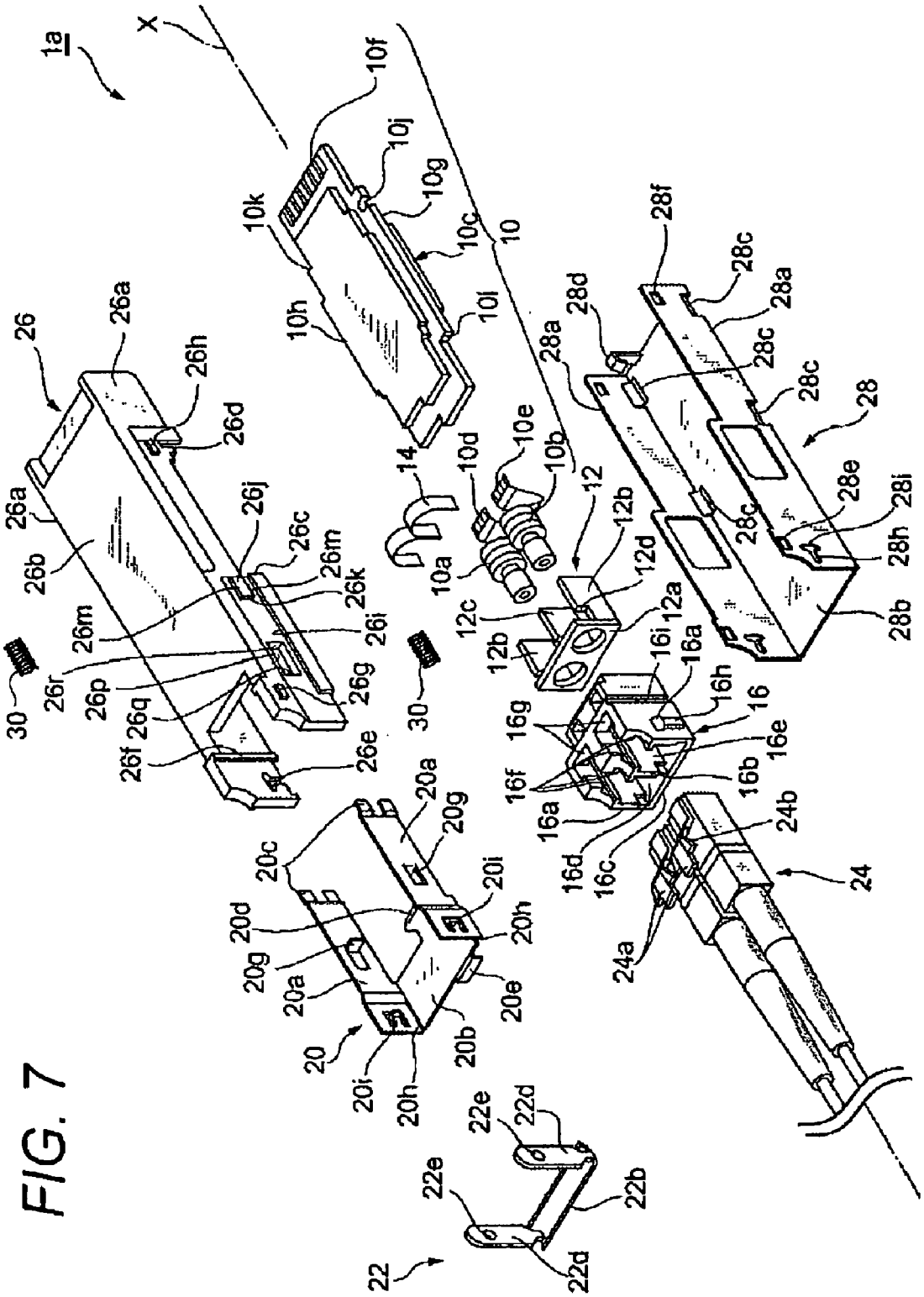
1a
X
10
10f
10j
10g
10k
10c
10h
10l
26
26a
26h
26d
26a
26b
26j
26c
26m
26k
26m
26i
26r
26p
26q
26g
26f
26e
30
30
14
10d
10e
10b
10a
12
12b
12d
12c
12a
12b
28f
28c
28a
28d
28a
28c
28c
28
28e
28i
28c
28h
28b
16i
16a
16h
16
16g
16e
16f
16b
16a
16d
16c
24b
24
24a
20a
20g
20c
20i
20d
20h
20g
20a
20e
20b
20
20i
20h
22e
22d
22e
22b
22d
22

FIG. 7

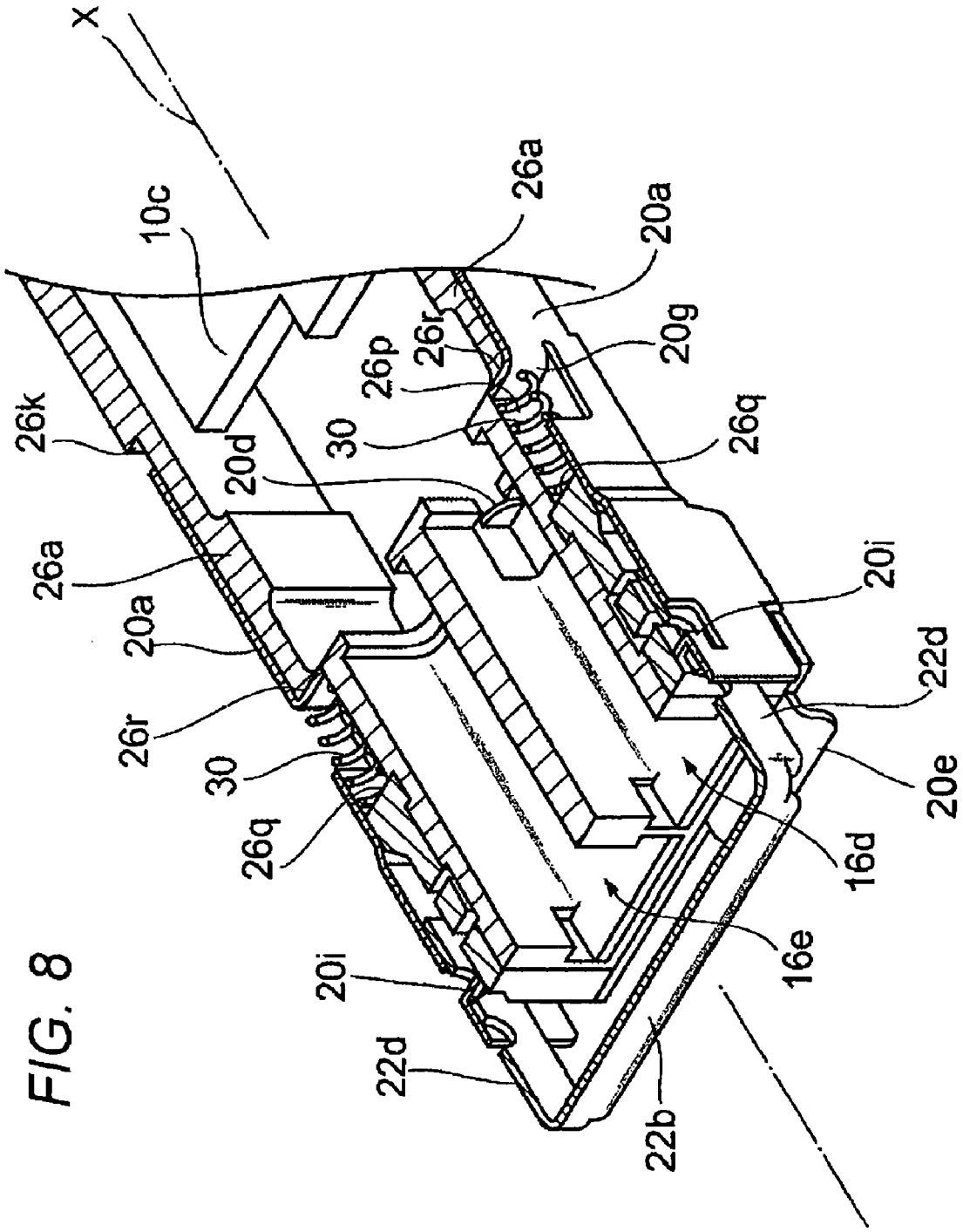

FIG. 8

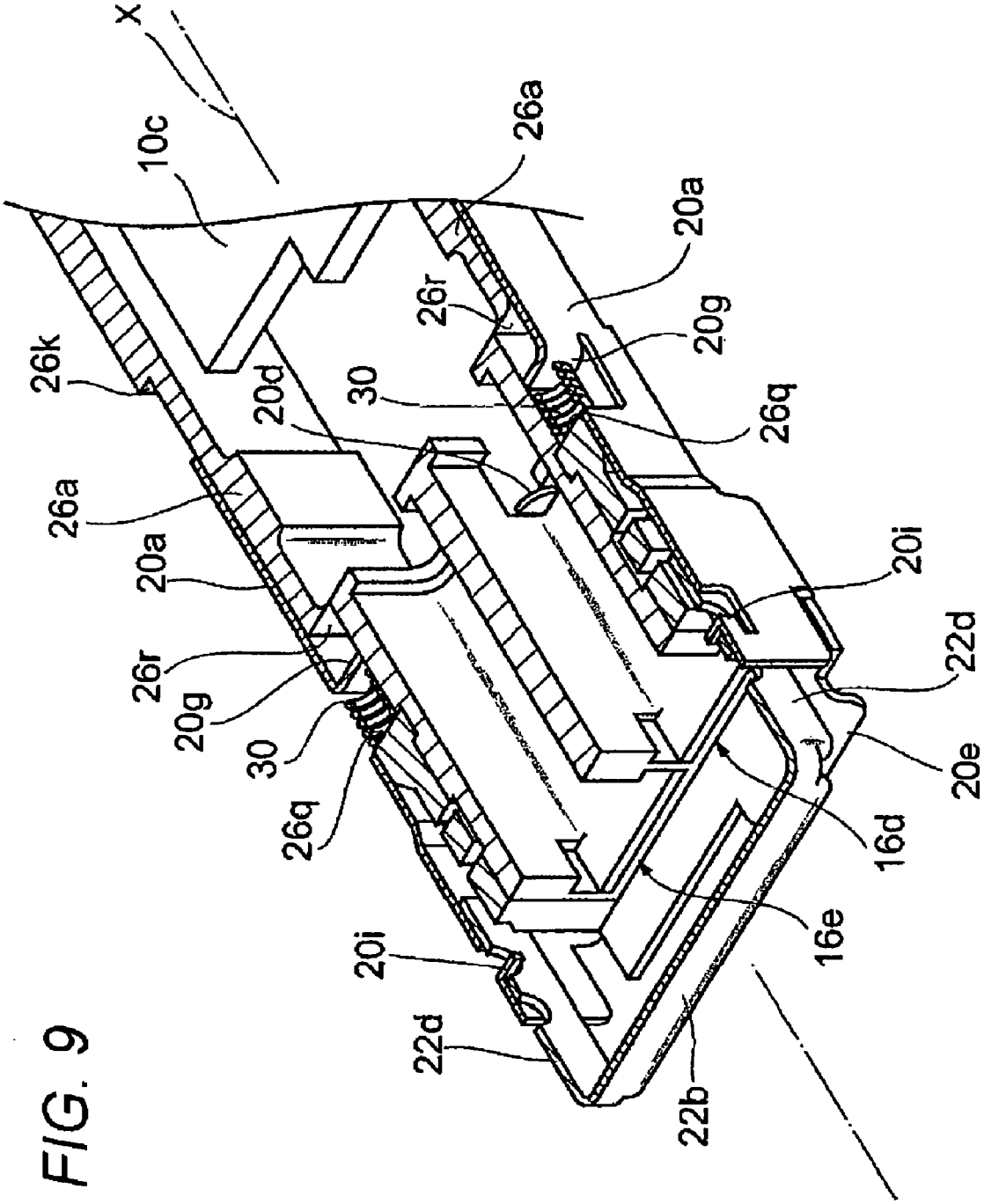

FIG. 9

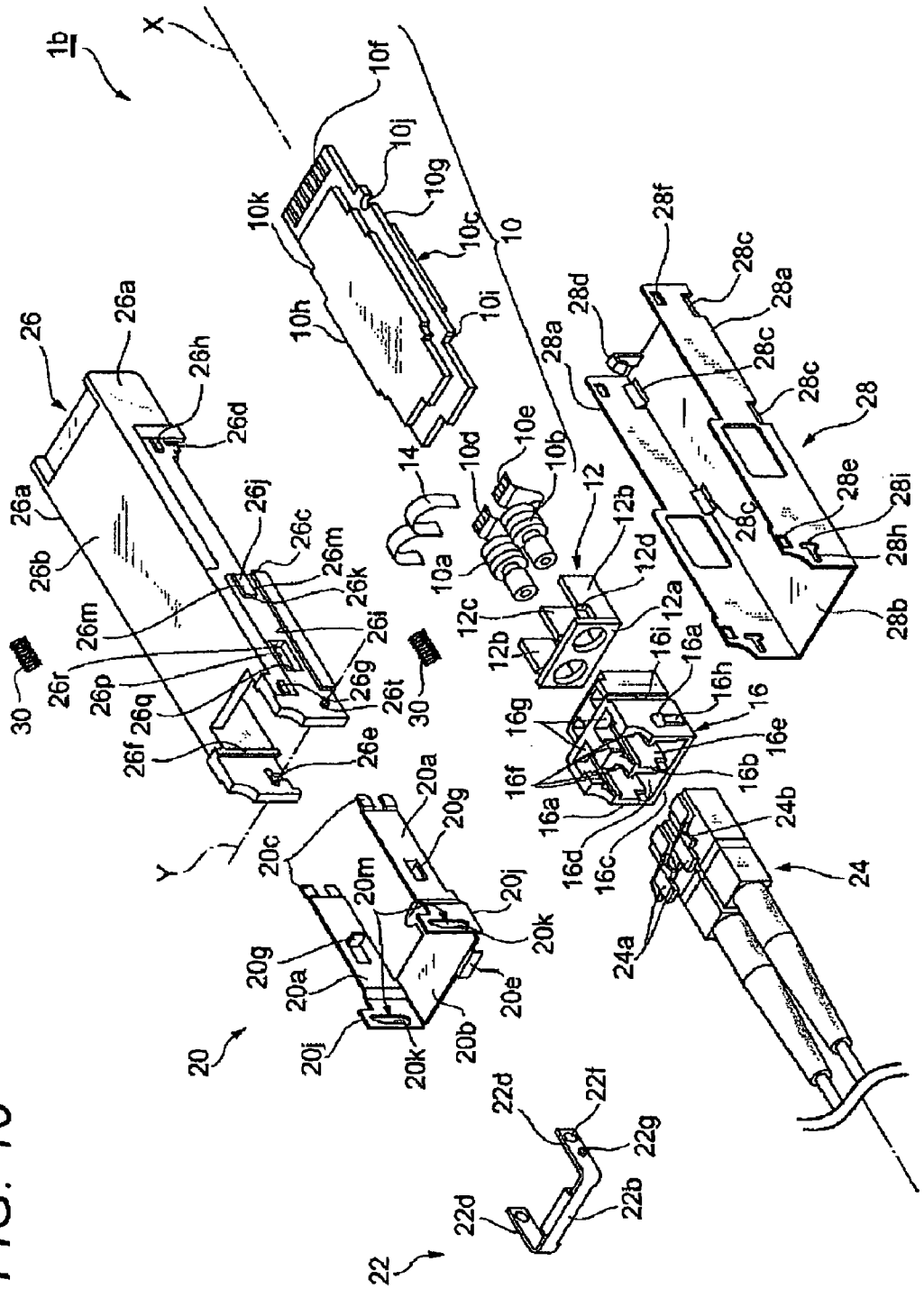
1b
X
10f
10j
10g
10k
10c
10
10h
10i
26
26a
26h
26d
26a
26b
26j
26c
26m
26k
26m
26i
26r
26p
26q
26g
26t
30
30
26f
26e
Y
14
10d
10e
10b
10a
12
12b
12d
12c
12a
12b
28f
28c
28d
28a
28c
28a
28c
28
28e
28i
28c
28h
28b
16i
16a
16h
16
16g
16e
16f
16b
16a
16d
16c
24b
24
24a
20a
20g
20c
20m
20j
20k
20g
20a
20e
20j
20b
20k
20
22d
22f
22g
22d
22b
22

FIG. 10

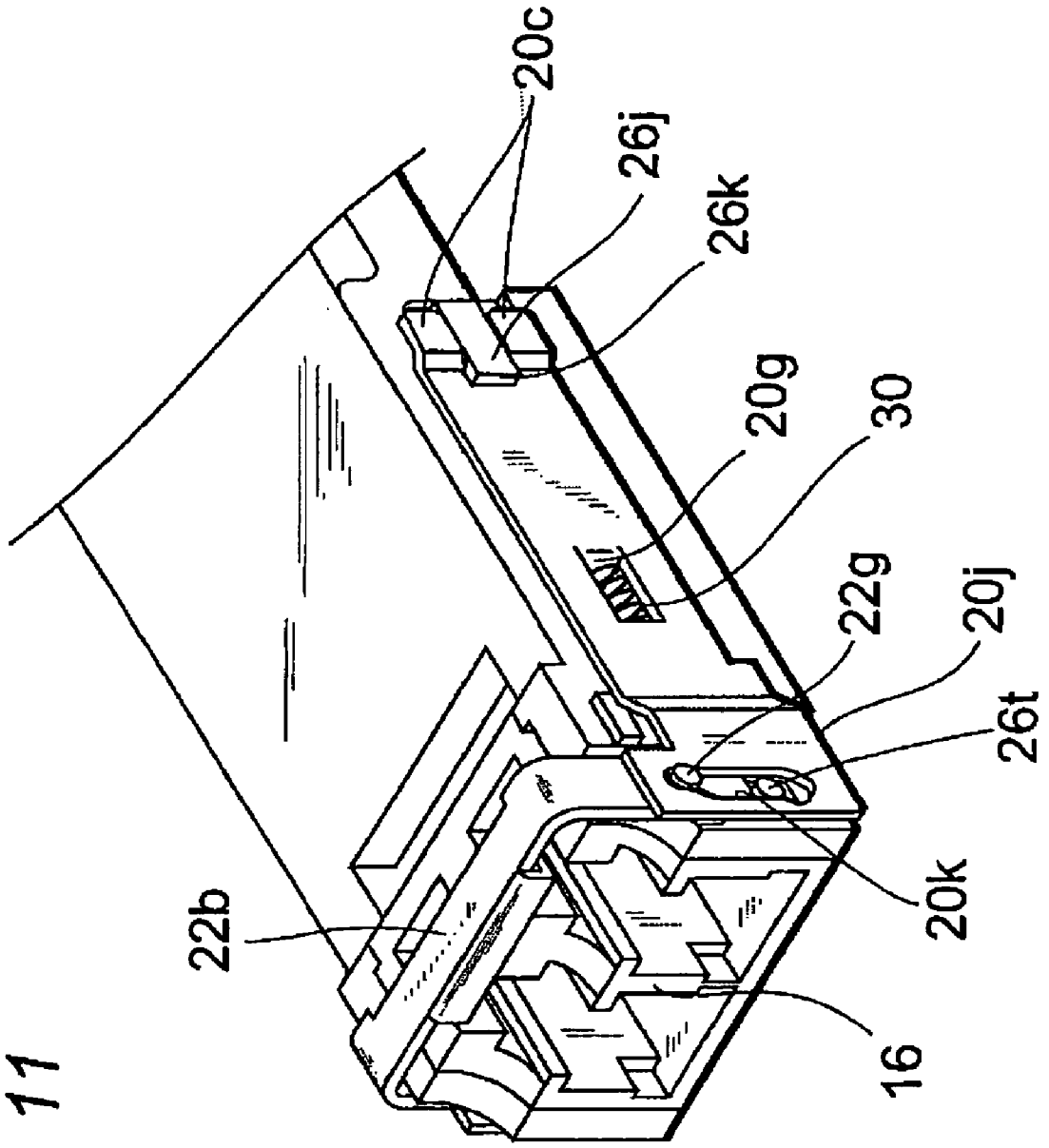

FIG. 11

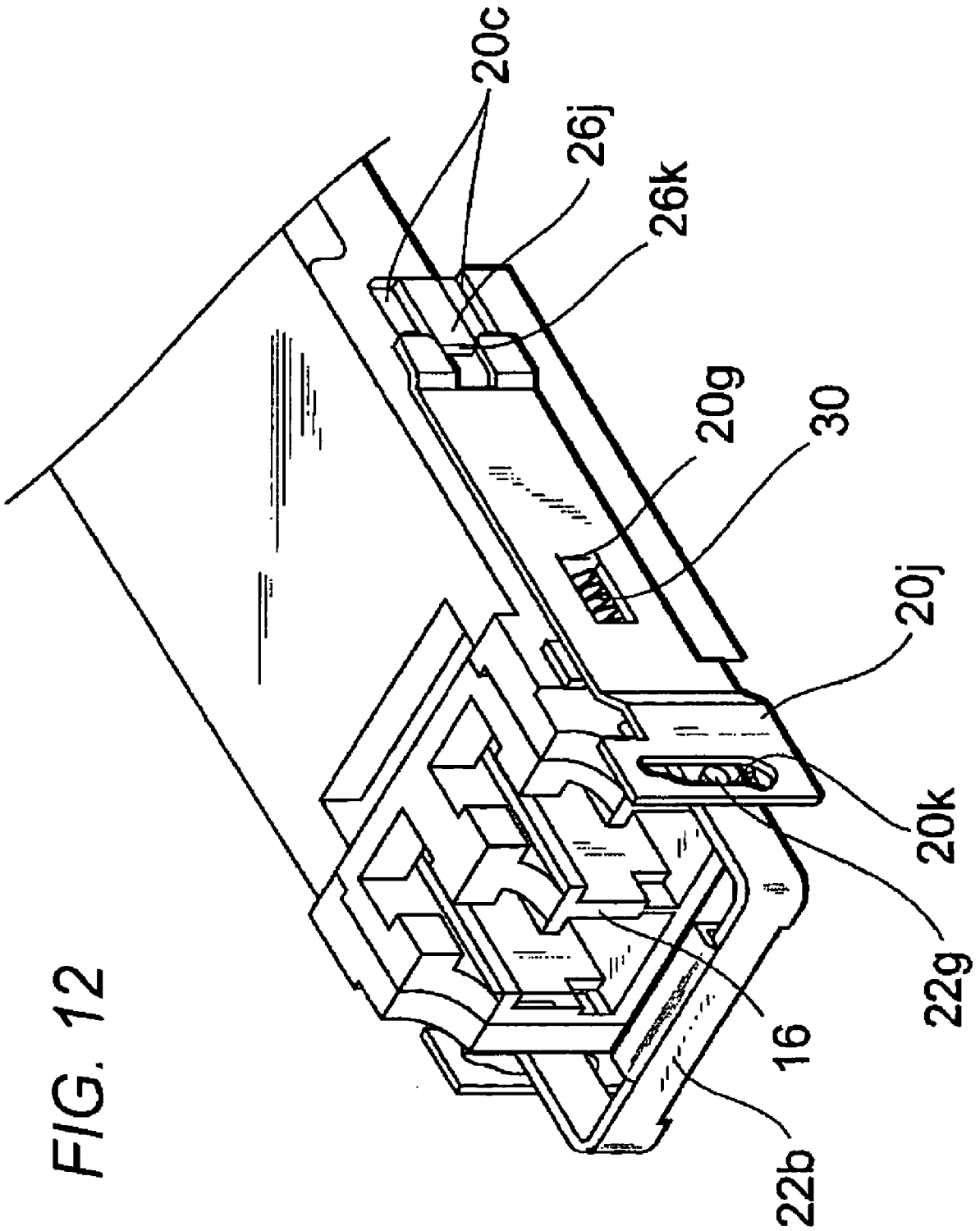

FIG. 12

OPTICAL MODULE HAVING A SIMPLE MECHANISM FOR RELEASING FROM A CAGE

BACKGROUND OF THE INVENTION

1. Field of the Invention

This invention relates to an optical module, especially, an optical module having a hot-pluggable function.

2. Related Prior Art

Optical modules having a hot-pluggable function are plugged in the cage and electrically coupled with the connector disposed on the host board. Various types of pluggable module are well known in the field. One has been disclosed in the U.S. Pat. No. 6,439,918. That is, the module disclosed in the '918 patent includes an optical receptacle for receiving the optical connector, a block having a latching/releasing mechanism, and a bail for leading the releasing action.

That is, the block includes a hook in one end thereof and a groove for receiving a portion of the bail therein. The hook latches with the slot in the cage, whereby the optical module is secured and fixed within the cage. When rotating the bail by the portion put in the groove as the center, the hook, linking with the motion of the bail, changes its hooking position with the cage. Accordingly, the optical module may be released from the cage. In the state that the optical connector is mated with the optical receptacle of the module, the bail can not rotate, accordingly, the optical module can not released from the cage.

SUMMARY OF THE INVENTION

One object of the present invention is to provide an optical module, which realizes the pluggable function with a simple and reliable structure.

According to one aspect of the present invention, on optical module to be mated with an optical connector, and is plugged in a space of a cage mounted on a host board is claimed. The cage has a resilient latch extending from the cage and protruding into the space. The optical module comprises an optical sub-assembly that includes an optical device, such as semiconductor laser diode or semiconductor photodiode, a housing, an receptacle body, and an actuator. The housing includes a projection butted to the latch when the optical module is plugged in the cage. The receptacle body, one end of which includes a receptacle for mating with the optical connector and the other end of which installs the optical sub-assembly. Accordingly, the optical device in the optical sub-assembly optically couples with the optical connector within the receptacle body. The actuator may be slide between the first position and the second position. At second position, the actuator presses the latch provided in the cage outward from the space. Accordingly, the hooking mechanism between the latch of the cage and the projection provided in the housing may be unfastened at the second position of the actuator, thereby releasing the optical module from the cage.

The actuator may include a pair of arms, each has an end portion, and a center portion connecting respective arms. The end portion widens in their span with relative to the length of the center portion. Accordingly, the actuator may press outward the resilient latch provided in the cage.

The housing may has a groove for receiving the arm of the actuator. The arm may slide in the groove. Further, the projection provided in the housing may be disposed within the groove and the end portion of the arm may be forked

such that the projection of the housing is but between the forked end portion of the arm.

The housing may include an upper body and a lower body. Both bodies have a pair of said walls. The side walls of the lower body covers the side walls of the upper body. Moreover, the side wall of the upper body provides the groove and the projection, while the side wall of the lower body provides an opening. The resilient latch of the cage may butt against the projection provided in the upper body by passing through the opening provided in the lower body. The arms of the actuator may be disposed between the side wall of the upper body and the side wall of the lower body.

The center portion of the actuator may provide a flange and the receptacle body may provide an opening for passing the flange of the actuator into the receptacle. When the optical connector is mated with the receptacle body, the flange of the actuator may butt against the optical connector, whereby the actuator is prevented to slide from the first position to the second position.

The optical module of the present invention may further comprise a bail for sliding the actuator, and the lower body of the housing provides a slot, the bail couples to the actuator therethrough. The first position of the actuator corresponds to that the bail is positioned in one end of the slot, and the second position of the actuator corresponds to that that bail is positioned in the other end of the slot.

In another configuration of the actuator and the bail, the actuator may further includes a pair of front side walls, each extending from the arm of the actuator with a span therebetween being greater than the length of the center portion of the actuator. The bail may be positioned inside of the front side walls of the actuator.

The housing may include a projection and the bail may include a hole mating with the projection of the housing. The bail may further include a projection and the actuator may include a slot for receiving the projection of the bail. In these configuration of the housing, the bail, and the actuator, the actuator may slide from the first position to the second position by moving the projection of the bail from an end of the slot of the actuator to a center thereof by pivoting the bail around the projection of the housing as the center thereof.

BRIEF DESCRIPTION OF DRAWINGS

FIG. **1** is a perspective view showing an optical module plugged in the cage on the host board;

FIG. **2** is a partially cut out view of the cage to illustrate the latch;

FIG. **3** is a perspective view of the optical module according to the first embodiment of the present invention;

FIG. **4** is an exploded view of the optical module according to the first embodiment;

FIG. **5** is a cross sectional view taken of the optical module along the line V—V in FIG. **1**;

FIG. **6** is a perspective view of the optical module cut along the line VI—VI in FIG. **1**;

FIG. **7** is an exploded view of the optical module according to the second embodiment of the present invention;

FIG. **8** is a perspective view of the optical module according to the second embodiment showing the actuator pushed rearward by the spring;

FIG. **9** is a perspective view of the optical module according to the second embodiment showing the actuator pulled frontward;

FIG. **10** is an exploded view of the optical module according to the third embodiment of the present invention;

FIG. **11** is an enlarged view of the front portion of the optical module according to the third embodiment, in which the bail is positioned where the actuator is set in the first position;

FIG. **12** is an enlarged view of the front portion of the optical module according to the third embodiment, in which the bail is positioned where the actuator is set in the second position.

DETAILED DESCRIPTION OF PREFERRED EMBODIMENTS

(First Embodiment)

An optical module **1** according to the first embodiment of the present invention will be described as referring to accompanying drawings. In the description and the drawings, the same symbols and numerals without overlapping explanations will refer same elements.

FIG. **1** a perspective view showing the optical module **1** according to the present invention, a host board **2**, and a cage **4** installed on the host board **2**. FIG. **2** shows a cage **4***a* portion of which is broken to clarify the inside of the cage and the structure of the latch for hooking the optical module **1** to the cage **4**. In the description, the upper/lower means the state where the cage **4** is assembled from the upper of the host board, namely, the state shown in FIG. **1**. The front/rear means the direction to/from which the optical module **1** is inserted/released with respect to the cage **4**.

The cage **4** has a pair of side walls **4***a* and an upper wall **4***b*, these walls forming a space **4***c* in which the optical module is received. The front end **4***d* of the cage **4** has an opening through which the optical module **1** is inserted into the space. This opening, as shown in FIG. **1**, communicates with an opening formed in the face panel **8** of the host board **2**.

Respective side walls include a latch **4***e* extending therefrom and protruding into the space **4***c* such that the edge thereof points to the rear. Further, the latch **4***e* may be resilient and bend toward the outside of the space **4***c*.

On the lower side of the cage is provided a plurality of pins **4***h* along the direction X with a span. By inserting respective pins into the via holes provided in the host board **2**, the cage **4** is assembled in and fixed to the host board **4**. Into the cage **4** thus assembled, the optical module **1** is inserted from the opening provided in the front end **4***d* of the cage **4**.

FIG. **3** is a perspective view, and FIG. **4** is an exploded view of the optical module **1** of the present invention. The optical module includes a primary unit **10**, a holder **12**, a bracket **14**, a receptacle body **16**, a housing **18**, and actuator **20** and a bail **22**. The housing comprises an upper body **26** and a lower body **28** communicating with the upper body and forming a space into which the primary unit **10** is received.

The primary unit **10** includes a semiconductor optical device. That is, the primary unit **10** includes a transmitting optical sub-assembly TOSA **10***a*, a receiving optical sub-assembly ROSA **10***b*, a substrate **10***c*, and wiring substrates **10***d* and **10***e* for connecting the TOSA **10***a* to the substrate **10***c* and the ROSA **10***b* to the substrate **10***c*, respectively.

The TOSA **10**A includes a light-emitting device such as semiconductor laser diode, which emits light to a direction parallel to the axis X by supplying a signal via the wiring substrate **10***d*. In this embodiment, the wiring substrate is a flexible printed circuit, but another configuration such as lead pins may be applicable.

The ROSA **10**B installs a light-receiving device such as a photo diode, and outputs an electrical signal, which corresponds to an incident light along to the direction X, via the wiring substrate **10***e* to the substrate **10***c*. The wiring substrate **10***e* of the present embodiment is exemplified by a flexible printed circuit board, lead pins instead of the flexible printed circuit board may be applicable.

The substrate **10***c* extends along the axis X, one end of which is connected by the wiring substrates **10***d* and **10***e*. Other end of the wiring substrate **10***d* provides a edge plug **10***f* that electrically mates with an electrical connector not shown in FIG. **4** disposed on the mother board.

The TOSA **10**A and the ROSA **10**B are fixed to the OSA holder **12** by the bracket **14**. The OSA holder **12** has a front wall **12***a*, a pair of side wall **12***b*, and a partition wall **12***c* which demarcates spaces where the TOSA and the ROSA are installed. The front wall **12***a* has two openings into which the head portion of the TOSA **10***a* and the ROSA **10***b* are inserted. The side wall **12***b* and the partition wall **12***c* has a cut **12***d*, into which the bracket **14** is inserted and thus the TOSA **10***a* and the ROSA **10***b* are fixed to the holder **12**. The holder **12** is assembled with the receptacle body **16** with the TOSA **10***a* and the ROSA **10***b* being fixed thereto.

The receptacle body **16** has a pair of side wall **16***a*, a partition wall **16***b*, both extending along the axis X, and a bottom **16***c* supporting the side wall **16***a* and the partition wall **16***b*. These side wall, partition wall and the bottom form two receptacle **16***d* and **16***c* having two openings for receiving the optical connector **24**. On the other end of the receptacle body **16**, as previously described, is assembled by the holder **12** with the TOSA **10***a* and the ROSA **10***b*. That is, the other end of the receptacle **16***d* is inserted with the head of the TOSA **10***a* and that of the ROSA **10***b*, and thus the TOSA **10***a* and the ROSA **10***b* optically couple with the optical fiber secured in the optical connector **24** in the receptacle.

The receptacle body is preferably made of resin coated with nickel thereon, whereby the dimensional accuracy and the noise immunity of the receptacle body **16** can be enhanced. Another material, for example, zinc alloy may be applicable to the receptacle body **16**.

Inner surface of the side wall **16***a* and the partition wall **16***b* of the receptacle body provides grooves **16***f* extending along the axis X. On the top of the receptacle body **16** has opening **16***g* so as to reach the grooves **16***f*. These grooves **16***f* and opening **16***g* are used for fixing the optical connector **24** within the receptacles **16***d* and **16***e*. The optical connector **24** has a latch **24***a* with a pair of hook on both side of the latch **24**. The hook **24***g* protrudes from the latch **24***a* to a direction across the axis X. When the optical connector **24** is inserted in the receptacle **16***d* and **16***e*, the hook **24***b* passes along the groove **16***f* by pushing the latch **24***a*, and the connector **24** is fixed to the receptacle **16***d* and **16***e* by releasing the latch **24***a* at the position the hook **24***b* is in the opening **16***g*.

The housing **18** includes an upper body **26** and a lower body **28**. The upper body **26** has a pair of side wall **26***a* and a top wall **26***b* connecting the side walls **26***a*. The upper body may be made of aluminum alloy, and may be coupled with the substrate **10***c* via a thermal sheet made of, for example, silicone. Thus, heat generated by devices mounted on the substrate **10***c* may effectively dissipate to the upper body and the ambient, accordingly, thermal stability of the optical module **1** can be enhanced.

The side wall **26***a* of the upper body **26** has a cut, and one end of the cut **26***c* is in contact with the step **10***i* of the substrate **10**. While a projection provided in the other end of

the cut fit with the cut **10***j* formed in the substrate **10***c*, thus the substrate **10***c* is fixed to the upper body **26**.

The upper body also has a groove **26***e* and a beam **26***f*, both extending across the axis X, in the inner surface thereof. On the other hand, the outer surface of the side wall **16***a* of the receptacle body **16** provides another beam **16***h* and another groove **16***i*. By coupling the groove **26***e* of the upper body with the beam **16***h* and the beam **26***f* with the groove **16***i* with respect to each other, the receptacle body **16** is fixed and secured to the upper body **26**.

The lower body **28** also has a pair of side wall **28***a* and a bottom wall **28***b* connecting the side walls **28***a*. When the lower body is assembled to the upper body **26**, the side walls **28***a* thereof covers the side walls **26***a* of the upper body, and the substrate **10***c* is installed and secured in a space formed and sandwiched by upper and lower bodies.

The side wall **28***a* has leaf slabs **28***c* formed by bending a portion thereof, and other leaf slabs **28***d*, which is bent and formed from the bottom wall **28***b*, is formed in the end of the lower body **28**. The leaf slabs **28***c* press the edges **10***g* and **10***h* of the substrate **10** to directions opposite to each other, and the other leaf slabs **28***d* press the step **10***k* formed in the substrate **10***c* to the front direction of the optical module **1**. Thus, the substrate **10***c* is positioned and fixed to the lower body **28**. The lower body **28** may be made of metal such as stainless steal and phosphor bronze to mechanically hold and electrically shield the substrate **10***c*.

The side wall **28***a* of the lower body **28** has holes **28***e* and **28***f* on both end portion thereof. A projection **26***g* provided in the outer surface **26***a* of the upper body **26** mates with one hole **28***e*, while the other projection **26***h* in the upper body **26** mates with the other hole **28***f*, thus the upper body **26** is fixed to the lower body **28**.

In the outer surface **26***a* of the upper body provides a groove **26***i* extending along the axis X for receiving the actuator **20**. The groove **26***i* has a projection **26***j* in the rear end thereof. The projection **26***j* includes a hook surface **26***k* extending along a direction across the axis X, which faces and is butted against the edge **4***f* of the latch **4***e* provided in the side of the cage **4**. By butting the edge **4***f* of the latch **4***e* against the hook surface **26***k*, the optical module **1** is fixed within the cage and prevented from releasing therefrom. The side wall **28***a* of the lower body **28** has openings to make the latch **4***e* in contact with the projection **26***j* of the upper body **26**.

The actuator **20** has a pair of arms **20***a* and a center portion **20***b* connecting respective arms **20***a*. The arm **20***a* is received in the groove **26***i* provided in the side wall **26***a* of the upper body **26**. That is, the arm **20***a* of the actuator is set into the groove **26***i* of the upper body **26** and the groove **26***i*, with the arm **20***a* set therein, covered with the lower body. Therefore, the actuator **20** enables to slide only in the direction along the axis X.

The tip portion of the arm **20***a* is forked and the forked slabs **20***c* puts the projection **26***j* in the groove **26***i* therebetween. The forked slabs **20***c* is bent toward the outer side of the optical module such that, when sliding the actuator **20** toward the front side, the forked slab **20***c* is in contact with the latch **4***e* and presses the latch toward the outer side of the optical module **1**. In other words, the span between the forked slab in respective arms **20***a* is greater than the length of the center portion **20***b*, accordingly, sliding the actuator with the arms **20***a* in the groove **26***i*, the forked slab presses the latch **4***e* outward and releases the latching between the projection **26***j* and the latch **4***e*.

FIG. **6**A is a cross sectional view taken along the line V—V in FIG. **1**, which shows the state when the optical module **1** is fixed in the cage **4**. In this state, the forked slabs **20***c* sandwich the projection **26***j* in the groove **26***i* and positions along the edge **26***m* of the projection **26***j*. While, FIG. **5**B shows a state that the optical module **1** is released from the cage **4**. Sliding the actuator **28** frontward to release the optical module **1** from the cage **4**, the edge **4***f* of the latch **4***e* is pushed out from the position facing to the hook surface **26***k* of the projection **26***i* toward the outer side by the forked slab **20***c*, which enables to release the optical module **1** from the cage **4**. In FIG. **5**B, the outer side of the optical module **1** corresponds to the downward in FIG. **5**A and FIG. **5**B.

Referring to FIG. **4** again, in the end portion of the center portion **20***b* of the actuator **20**, a flange **20***d* bent upward therefrom is provided. The flange **20***d* protrudes in the receptacles **16***e* and **16***d*. FIG. **6** shows a cross sectional view, taken along the line VI—VI in FIG. **1** and illustrated in perspective, of the front portion of the optical module **1**. In the rear end of the bottom **16***c* of the receptacle body **16**, a guide opening **16***k* is provided to protrude the flange **20***d* into the receptacles **16***d* and **16***e*. The flange **20***d* is in contact with the outer surface of the connector **24** in the receptacles **16***d* and **16***e*. Therefore, when the connector **24** is inserted into the receptacles **16***d* and **16***e*, and is fixed thereto, the flange **20***d* butts against the optical connector **24**, the optical connector is fixed to the receptacle body **16** by hook **24** thereof, thus the actuator **20** can not be pulled out from the optical module **1**. The width of the flange **20***d* is preferably smaller than one third of that of the optical connector, because in the receptacle body **16** thus configured, the side walls **16***a*, the partition wall **16***b* and the bottom **16***c* may not reduce in its holding mechanism for the optical connector therein by the existence of the guide opening **16***k*.

The guide opening **16** has a substantial length along the axis X to guide the flange **20***d* from a first position to a second position. The first position corresponds to the edge portion of the receptacle body, and the flange, when the optical connector **24** is inserted in the receptacles **16***d* and **16***e*, slides to the first position. The flange **20***d* is prohibited to slide at the first position by the existence of the optical connector **24**. Accordingly, the optical module **1** cannot be released from the cage **4** when the optical connector **24** is installed into the optical receptacles **16***d* and **16***e*.

The second position of the flange **20***d* corresponds to the front end of the guide opening **16***k*. When the actuator slides to the front end and the flange **20***d* moves to the second position, the latch **4***e* of the cage **4** is pushed outward by the forked slabs **20***c* provided in the arm **20***a* of the actuator **20**, and the optical module **1** can be released from the cage **4**.

Moreover, the actuator **20** has another flange **20***e* bent downward in the front edge of the center portion **20***b* thereof. This flange **20***e* is usable to slide the actuator **20** when the bail, described in detail below, is not provided in the optical module **1**.

The side portion **20***a* of the actuator **20** has holes **20***f*. Further, the side wall **28***a* of the lower body **28** may provide slot **28***h* extending along the axis X and communicating with the hole **20***f* of the actuator **20**. The shaft **22***a* of the bail **22** is inserted into the hole **20***a* of the actuator **20** via the slot **28***h* of the lower body **28**. The bail **20** is usable to pull out the optical module **1** from the cage **4**. In the present embodiment shown in FIG. **2**, the bail **22** has a grip **22***b* pivotable in the front of the receptacles **16***d* and **16***e*.

When the optical connector **24** mates with the receptacles **16***d* and **16***e*, the grip **22***b* of the bail **22** may pivot in upward or downward. In the present embodiment, the slot **28***h* provided in the lower body **28** continues to another slot **28***i* extending in a direction perpendicular to the axis X. Pivoting

the grip **22***b* in upward or downward, the corner portion **22***c* of the bail may mate with the other slot **28***i*.

(Second Embodiment)

FIG. **7** is an exploded view of an optical module **1***a* according to the present embodiment. The optical module **1***a*, similar to the first embodiment shown in FIG. **4**, includes a primary unit **10**, a holder **12**, a bracket **14**, a receptacle body **16**, a housing **18**, an actuator **20** and a bail **22**. In the modified optical module **1***a*, the upper body **26**, the actuator **20**, and the bail are different to corresponding elements in the first embodiment. Further, the optical module **1***a* of the second embodiment includes a spring **30**.

As shown in FIG. **7**, the actuator **20** in the arm **20***a* thereof provides a projection **20***i* cut therefrom and bent inward. Between the arm **20***a* and the center portion **20***b* of the actuator **20** is cut by a length from the front edge thereof. Further, the front side walls **20***h* of the actuator **20** is expanded outward with respect to the arm **20***a*.

The bail **22** in the present embodiment also has a grip **22***b* and a pair of arms **22***d* bent from the grip **22***b*, and the hole **22***e* in the arm **22***d*. The bail **22**, the arm **22***d* of which passes through the cut provided between the front side wall **20***a* and the center portion **20***b* of the actuator **20**, is fixed to the actuator **20** by the projection **20***i* being inserted in the hole **22***e* in the arm **22***d*.

The actuator **20** further provides another flange **20***g* in the arm **20***a*. The other flange **20***g* is cut from the arm **20***a* and bent inward such that the surface of the other flange **20***g* extends along a direction intersecting the axis X. On the other hand, the side wall **26***a* of the upper body **26** further provides another groove **26***p* into which the other flange **20***g* of the actuator is inserted. The other groove **26***p* has a pair of inner surfaces **26***q* and **26***r*, both extending in the direction intersecting the axis X. A spring **30** is inserted between the other flange **20***g* and one of the inner surface **26***q* of the groove **26***p*.

FIG. **8** is a cross sectional view of the optical module **1***a* illustrated in perspective, and shows the state when actuator **20** is pushed therein. The spring **30**, in the ordinal position, presses the other flange **20***g* to touch the other surface **26***r* of the groove **26***p*, and the flange **20***d*, provided in the center portion **20***b* of the actuator, is set in the first position. That is, the spring **30** normally holds the actuator **20** in the position such that the latch **4***e* of the cage **4** may not release from the projection in the upper body.

FIG. **9** is also a partially cut perspective view showing the state that the actuator **20** is pulled out. The spring is shrank by the flange **20***g*, and the latch **4***e* of the cage **4** is released from the projection **26***j* of the upper body **26**. Even when the actuator is pulled out, since the side wall **28***a* of the lower body **28** covers the groove **26***p* of the upper body, the spring **30** does not bound out from the groove **26***p*.

Thus, the optical module **1***a* of the present embodiment, even when the optical connector does not exist in the optical receptacles **16***d* and **16***e*, the optical module **1***a* is fixed to the cage **4**, because the spring **30** forces the actuator **20** to the first position not to release the optical module **1***a* from the cage **4**. Therefore, as long as an external force to shrink the spring is not operated, the optical module **1***a* can not release from the cage **4**.

In figures from FIG. **7** to FIG. **9**, the bail **22** is set inside of the actuator **20**, and, when the actuator **20** is in the first position at which the optical module **1***a* is latched to the cage **4**, the bail **22** is set in one of the upward and the downward position relative to the optical module **1***a*.

(Third Embodiment)

FIG. **10** is an exploded view showing an optical module **1***b* according to the third embodiment of the present invention. The optical module **1***b*, similar to the optical module **1***a* of the second embodiment, includes a primary unit **10**, a holder **12**, a bracket **14**, a receptacle body **16**, a housing **18**, an actuator **20**, a bail **22**, and a spring **30**. In the present optical module **1***b*, the arrangement of the upper body **26**, the actuator **20**, and the bail are different to those contained in the optical module **1***a* of the second embodiment.

As shown in FIG. **10**, the thickness of the side wall **20***a* in the front end portion of the upper body **20** is formed thin to coincide with the bottom surface of the groove **20***i*. Further, in the front end portion of the side wall **10***a* provides a pair of projections **26***t* extending along another axis Y.

The leg portion **22***d* of the bail **22** provides a hole **22***f* and a projection **22***g*, both extending along the axis Y. The bail **22** is able to pivot around the projection **26***t*, namely around the axis Y, by inserting the projection into the hole **22***f* of the leg portion **22***d*.

The actuator **20** in the present embodiment provides a slot **20***m* in the front end portion **20***j* thereof, the inner surface **20***k* of which becomes a sliding surface. That is, the projection **22***g* provided in the bail **22**, inserting into the slot **20***m*, slides on the inner surface of the slot **20***m* as the bail **22** pivots around the axis Y, and moves the actuator **20** with respect to the upper body **26**.

FIG. **11** shows a positional relation ship between the actuator **20** and the bail **22** when the optical module **1***b* is latched with the cage **4**, while FIG. **12** shows the relation ship when the optical module **1***b* is in the released state. In these figures, the lower body **28** is not shown.

The flange **20***g* of the actuator **20** is pressed in backward by the spring **30**, accordingly, the forked slab **20***c* provided in the edge of the arm **20***a* of the actuator **20** is set in the lock position. In this state, the projection **22***g* provided in the leg portion of the bail **22** is slid to the top of the slot **20***m*, and the grip **22***b* of the bail **22** is set in the upward position relative to the receptacle body **16**.

On the other hand, pivoting the bail around the axis Y, the projection **22***g* slides on the inner surface **20***k* of the slot **20***m* and moves to the front position as shown in FIG. **12**. The stroke length of the bail **22** by pivoting corresponds to the length to slide the forked slab **20***c* from the position where the latch **4***e* of the cage **4** faces to the projection **26***j*, the first position, to the releasing position, namely, the second position.

In FIG. **11**, although the bail **22** is set in the upward position when the optical module **1***b* is latched to the cage **4**, the bail **22** may be set in the downward position, that is, the projection **22***g* positions in the bottom of the slot **20***m*. The projection **26***t* provided in the side wall **26***a* of the upper body vertically positions nearly in the middle of the upper body **26**, accordingly, the bail **22** may be set in the upward or the downward position when the optical module **1***b* is in the latched state.

Thus, in the optical module **1***b*, pivoting the bail **22** may slide the forked slab **20***s* from/to the position where the optical module latches with or release from the cage **4**. Further, since the actuator **20** is pressed by the spring, the bail **22** is automatically positioned where the latch **4***e* of the cage **4** faces to the projection **26***c* provided in the side wall **26***a* of the upper body **26**.

Thus, the bail **22** is provided in the optical module **1**, and the bail **22** may be set in upward and downward position when the optical connector mates with the receptacle **16**.

Therefore, the optical module **1** can be installed in a pile-up configuration.

Although the optical module **1***b* provides the projection **26***t* in the upper body and the hole in the bail **22**, it may be applicable that the hole and the projection are respectively provided in the opposite element, namely, the hole in the upper body and the projection in the leg portion of the bail.

While the invention has been particularly shown and described with respect to illustrative and preformed embodiments thereof, it will be understood by those skilled in the art that the foregoing and other changes in form and details may be made therein without departing from the spirit and scope of the invention which should be limited only by the scope of the appended claims.

What is claimed is:

1. An optical module for communicating with an optical connector, said optical module being plugged in a space formed by a plurality of walls of a cage mounted on a host board, at least one of said walls of said cage including a resilient latch protruding into said space, comprising:

an optical sub-assembly including an optical device therein;

a housing providing a projection butting against an edge of said resilient latch when said optical module is plugged in said cage;

a receptacle body having one end and another end, said one end including a receptacle for mating with said optical connector and said other end installing said optical sub-assembly, said receptacle body further including an opening; and

an actuator slidable between a first position and a second position, said actuator including a pair of arms and a center portion connecting said arms, a span between said arms being longer than a length of said center portion, said center portion including a flange to be inserted into said opening of said receptacle body, said actuator pressing said resilient latch of the cage outward from said space at said second position,

wherein said optical module is disengaged from said cage by sliding said actuator from said first position to said second position, and

wherein said actuator is, when said optical connector is mated with said receptacle body, unable to slide from said first position to said second position by butting said flange against said optical connector inserted into said receptacle body.

2. The optical module according to claim **1**, wherein said housing has a groove for receiving said arm of said actuator, said arm of said actuator being slidable in said groove.

3. The optical module according to claim **2**, wherein an end portion of said arm of said actuator is forked and said projection provided in said housing is disposed within said groove, said projection being put between said forked end portions of said actuator in said groove.

4. The optical module according to claim **2**, wherein said housing comprises an upper body including a pair of side walls and a lower body including a pair of side wails, said side walls of said upper body disposing said groove and said projection, said side walls of said lower body providing an opening and covering said side walls of said upper body, said resilient latch of said cage being butted against said projection by extending through said opening provided in said side walls of said lower body, and

wherein said arm of said actuator is disposed between said side wall of said upper body and said side wall of said lower body.

5. The optical module according to claim **1**, further including a bail connected to said actuator for sliding said actuator.

6. The optical module according to claim **5**, wherein said bail is set in an upward position and in a downward position relative to said optical module when said actuator is set in said first position.

7. The optical module according to claim **5**, wherein said housing comprises an upper body and a lower body, said bail being coupled to said actuator via said lower body.

8. The optical module according to claim **5**, wherein said lower body includes a slot through which said bail passes to couple to said actuator, and

wherein said first position of said actuator corresponds to a position where said bail is in one end of said slot, and said second position of said actuator corresponds to a position where said bail is in another end of said slot.

9. The optical module according to claim **5**, wherein said actuator further includes a pair of front side walls each extending from said arms, and

wherein a span between said front side walls is greater than a length of said center portion, said bail being positioned inside of said front side walls of said actuator.

* * * * *