US005824127A

United States Patent [19]

Bange et al.

[11] **Patent Number: 5,824,127**

[45] **Date of Patent: Oct. 20, 1998**

[54] **ARSENIC-FREE GLASSES**

[75] Inventors: **James C. Bange**, Corning; **William G. Dorfeld**, Beaver Dams; **James C. Hayes**, Painted Post; **Josef C. Lapp**, Corning, all of N.Y.

[73] Assignee: **Corning Incorporated**, Corning, N.Y.

[21] Appl. No.: **742,610**

[22] Filed: **Oct. 28, 1996**

Related U.S. Application Data

[60] Provisional application No. 60/022,193 Jul. 19, 1996.

[51] **Int. Cl.**[6] **C03B 5/16**; C03B 5/18; C03B 15/02

[52] **U.S. Cl.** **65/90**; 65/134.1; 65/134.9; 65/193

[58] **Field of Search** 65/90, 134.1, 134.3, 65/134.9, 193

[56] **References Cited**

U.S. PATENT DOCUMENTS

2,009,764	7/1935	Dalton	106/36.1
2,982,053	5/1961	Elmer	49/79
3,338,696	8/1967	Dockerty	65/145
3,673,049	6/1972	Giffen et al.	161/164
3,849,097	11/1974	Giffen et al.	65/33
3,850,602	11/1974	Bruning	65/18
4,018,965	4/1977	Kerko et al.	428/410
5,374,595	12/1994	Dumbaugh et al.	501/66
5,508,237	4/1996	Moffatt et al.	501/69
5,688,300	11/1997	Ashley et al.	65/86

FOREIGN PATENT DOCUMENTS

0 527 320 A1	2/1993	European Pat. Off. .
0 528 114 A1	2/1993	European Pat. Off. .
0 528 149 A1	2/1993	European Pat. Off. .
0 538 568 A1	2/1993	European Pat. Off. .
0 607 865 A1	7/1994	European Pat. Off. .
1147830	4/1969	United Kingdom .

OTHER PUBLICATIONS

Dr. J.P. Poole, "Fundamentals of Fining", Commission on Glass, Annual Meeting, Toronto, Canada, 1969. pp. 169–176.

Dr. Horst Scholze, "Gases and Water in Glass", Part one, Lectures on Glass and Technology, Rensselaer Polytechnic Institute, Troy, NY, Mar. 30–Apr. 1, 1966. 19 pages.

Robert J. Eagan and Gary J. Jones, "Bubble Formation in Glass by Reaction with Silicon and Silicon–Germanium Alloys", Sep. 2, 1992. pp. 300–301.

Edith M. Firth, F.W. Hodkin, Michael Parkin, W.E.S. Turner, "The Effect of Moisture on the Melting, Working, and other Properties of Totash–Lead Oxide–Silica Glasses of the 'English Crystal' Type", Journal of the Society of Glass Technology, 1926. vol. X., pp. 220–229.

S.M. Budd, V.H. Exelby and J.J. Kirwan, "The Formation of Gas Bubbles in Glass at High Temperature", Glass Technology vol. 3 No. 4 Aug. 1962, pp. 124–129.

M. Boffe, G. Percriaux and E. Plumat, "Formation of Bubbles During Devitrification and Remelting of Crystals in Glass", Nucleation and Crystallization Symposium, pp. 47–54.

J.E. Fenstermacher, R.C. Lesser and R.J. Ryder, "A Study of Water Content of Container Glasses", The Glass Industry/ Sep. 1965, pp. 518–521.

(List continued on next page.)

Primary Examiner—Peter Chin
Assistant Examiner—Jacqueline A. Ruller
Attorney, Agent, or Firm—Robert L. Carlson

[57] **ABSTRACT**

This invention is related to glasses for use as substrates in flat panel display devices, more specifically to a family of aluminosilicate glasses in which less than 0.2 mole percent and preferably no As_2O_3 is used as a fining agent and the β-OH of the glass is maintained below about 0.5 mm.

30 Claims, 1 Drawing Sheet

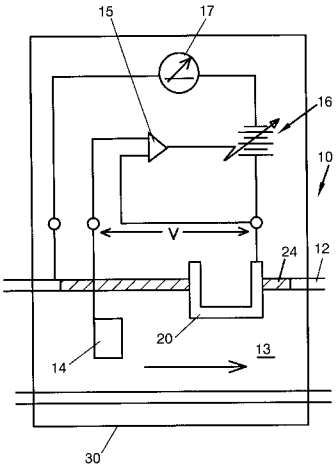

OTHER PUBLICATIONS

Ebba de Kever and Gunther Heinz Frischat, "Influence of batch moisture and atmosphere on the melting behavior of As_2O_3–and Sb_2O_3–containing glasses", Glastechnische Berichte, Feb. 1992, pp. 64–66.

Dr. J.P. Poole, "Fundamentals of Fining", Commission on Glass, Annual Meeting, Toronto, Canada, 1969, pp. 169–176.

Dr. H.Scholze, "Gases and Water in Glass", Lectures on Glass and Technology. Rensselaer Polytechnic Institute, Mar. 30—Apr. 1, 1966.

E.M.Firth, F.W.Hodkin, M.Parkin, W.E.S. Turner, "The Effect of Moisture on the Melting, Working, and other Properties of Potash–Lead Oxide–Silica Glasses of the English Cyrstal", Journal of the Society of Glass Technology, pp. 220–229.

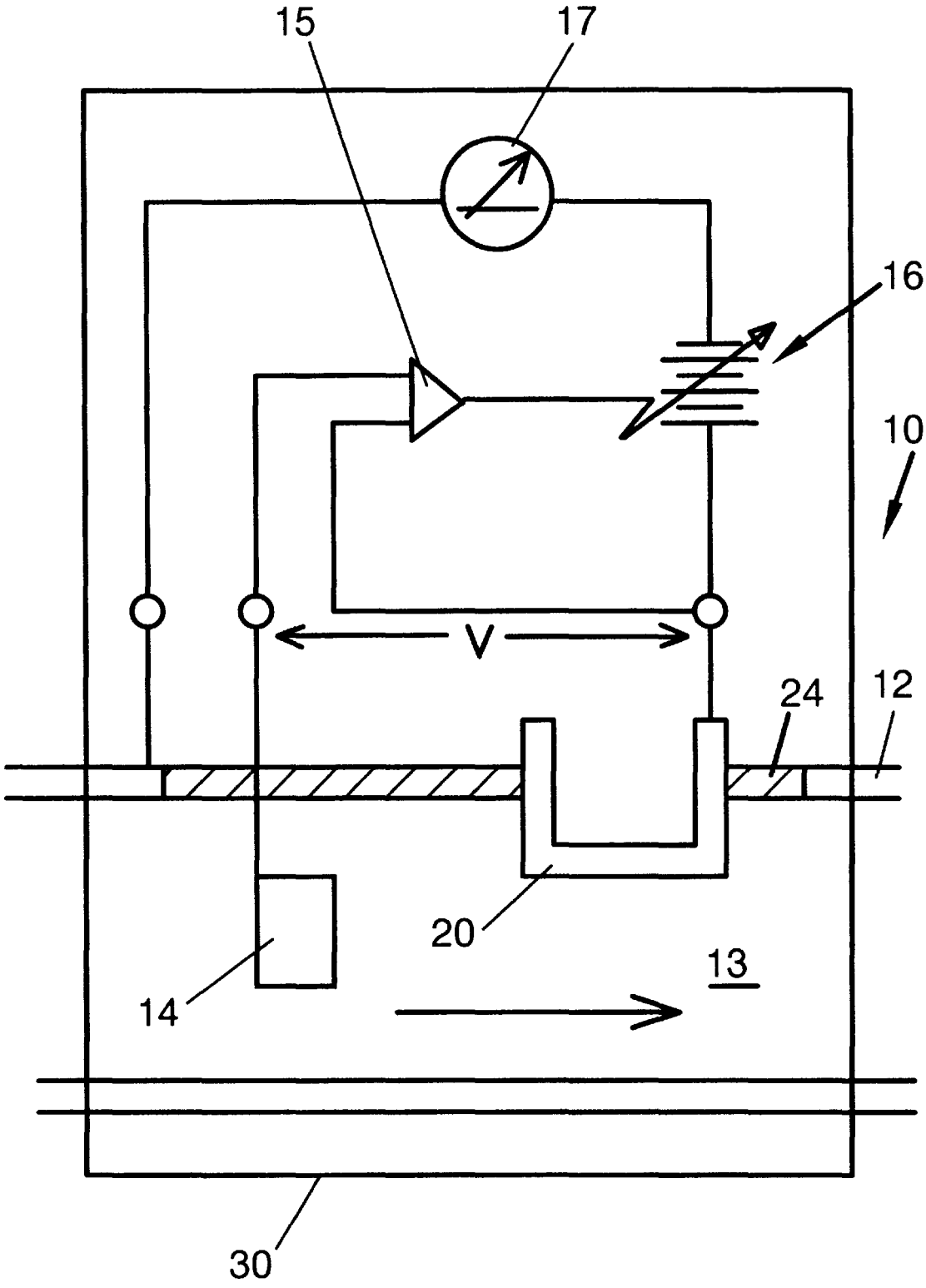

Fig. 1

ARSENIC-FREE GLASSES

RELATED APPLICATIONS

This application claims the benefit of U.S. Provisional application Ser. No. 60/022,193, filed Jul. 19, 1996.

FIELD OF THE INVENTION

This invention is directed to arsenic-free glass compositions and methods of making such glasses which are suitable for use as substrates in flat panel display devices without having to use arsenic containing materials.

BACKGROUND OF THE INVENTION

Liquid crystal displays (LCDs) are passive flat panel displays which depend upon external sources of light for illumination. They are manufactured as segmented displays or in one of two basic configurations. The substrate needs (other than being transparent and capable of withstanding the chemical conditions to which it is exposed during display processing) of the two matrix types vary. The first type is intrinsic matrix addressed, relying upon the threshold properties of the liquid crystal material. The second is extrinsic matrix or active matrix (AM) addressed, in which an array of diodes, metal-insulator-metal (MIM) devices, or thin film transistors (TFTs) supplies an electronic switch to each pixel. In both cases, two sheets of glass form the structure of the display. The separation between the two sheets is the critical gap dimension, of the order of 5–10 μm.

Intrinsically addressed LCDs are fabricated using metal deposition techniques, typically at temperatures $\leqq$350° C., followed by standard metal etching procedures. As a result, the substrate requirements therefor are often the same as those for segmented displays. Soda-lime-silica glass with a barrier layer has proven to be adequate for most needs. A high performance version of intrinsically addressed LCDs, the super twisted nematic (STN) type, has an added requirement of extremely precise flatness for the purpose of holding the gap dimensions uniform. Because of that requirement, soda-lime-silica glass made using the float glass manufacturing process must be polished. Such polishing processes are expensive and time consuming, and generate a large amount of glass particles which have the potential to negatively impact further processing of the glass sheets. Alternatively, glass can be formed using a process which does not require polishing, e.g. fusion downdraw.

Extrinsically addressed LCD's can be further subdivided depending upon the nature of the electrical switch located at each optical element (subpixel). Two of most popular types of extrinsically (or active matrix, AMLCD) addressed LCD's are those based on either amorphous (a-Si) or polycrystalline (poly-Si) silicon thin film transistors (TFT's).

U.S. Pat. No. 4,824,808 (Dumbaugh, Jr.) lists four desirable properties for a glass to exhibit in order to fully satisfy the needs of a substrate for extrinsically addressed LCD's:

First, the glass must be essentially free of intentionally added alkali metal oxide to avoid the possibility of alkali metal contamination of the TFT;

Second, the glass substrate must be sufficiently chemically durable to withstand the reagents used during the manufacture of the TFT;

Third, the expansion mismatch between the glass and the silicon present in the TFT array must be maintained at a relatively low level even as processing temperatures for the substrates increase; and

Fourth, the glass must be capable of being produced in high quality thin sheet form at low cost; that is, it must not require extensive grinding and polishing to secure the necessary surface finish.

That last requirement is most difficult to achieve inasmuch as it demands a sheet glass production process capable of producing essentially finished glass sheet. A process capable of meeting this requirement is a particular downdraw process known as the overflow downdraw, or fusion, sheet manufacturing process. The overflow downdraw process is described, for example, in U.S. Pat. No. 3,338,696 (Dockerty) and U.S. Pat. No. 3,682,609 (Dockerty). Fusion formed glass sheets, unlike float glass sheets, are sufficiently flat that they do not need to be polished after forming. Two glasses which meet the above requirements, Corning Incorporated Codes 7059 and 1737 sheet glass, are currently employed as substrates for extrinsically addressed LCD's. These glasses are made using the overflow downdraw process, and hence do not require polishing after forming.

Recent improvements in the resolution of extrinsically addressed LCD's have led to the development of a fifth glass requirement, that is, a high glass strain point. This property is used as an indication of the thermal shrinkage of the glass. As can be appreciated, the lower the strain point, the greater is this thermal shrinkage. Low thermal shrinkage is desirable for precise alignment during successive photolithographic and other patterning steps during the TFT processing. Consequently, glasses having higher strain points are generally preferred for extrinsically addressed LCD's, particularly those which employ poly-Si TFT technology. Thus, there has been considerable research to develop glasses demonstrating high strain points so that thermal shrinkage is minimized during device processing. Corning Code 1737 glass, which has the highest strain point (666° C.) in the AMLCD substrate industry, is rapidly becoming an industry standard. Concurrent with their high strain points, these glasses often have high melting temperatures, e.g. on the order of 1550°–1650° C.

Another technology termed "chip-on-glass" (COG) has further emphasized the need for the substrate glass to closely match silicon in thermal expansion. Thus, the initial LCD devices did not have their driver chips mounted on the substrate glass. Instead, the silicon chips were mounted remotely and were connected to the LCD substrate circuitry with compliant or flexible wiring. As LCD device technology improved and as the devices became larger and required finer resolutions, these flexible mountings became unacceptable, both because of cost and of uncertain reliability. This situation led to Tape Automatic Bonding (TAB) of the silicon chips. In that process the silicon chips and electrical connections to the chips were mounted on a carrier tape, that subassembly was mounted directly on the LCD substrate, and thereafter the connection to the LCD circuitry was completed. TAB decreased cost while improving reliability and increasing the permitted density of the conductors to a pitch of approximately 200 μm—all significant factors. COG, however, provides further improvement over TAB with respect to those three factors. Hence, as the size and quality requirements of LCD devices increase, COG is demanded for those devices dependent upon the use of integrated circuit silicon chips. For that reason, the substrate glass preferably demonstrate a linear coefficient of thermal expansion closely matching that of silicon; i.e., a linear coefficient of thermal expansion (0°–300° C.) between about $32–46\times10^{-7}$/°C., most preferably $32–40\times10^{-7}$/°C.

Many of the glasses manufactured for flat panel display applications, particularly those which are formed by downdraw processes (e.g., the fusion or slot draw processes), are melted or formed using manufacturing equipment com-

prised of refractory metals, e.g. platinum or platinum alloys, particularly in the fining and conditioning sections of the process, where refractory metals are employed in order to minimize the creation of compositional in homogenieties and gaseous inclusions caused by contact of the glass with oxide refractory materials. In addition, many of these manufacturing processes employ arsenic as a fining agent. This is because arsenic is among the highest temperature fining agents known, meaning that, when added to the molten glass bath, it allows for O_2 release from the glass melt even at high melting temperatures (e.g. above 1450° C.). This high temperature O_2 release, (which aids in the removal of gases during the melting and fining stages of glass production), coupled with a strong tendency for O_2 absorption at lower conditioning temperatures, (which aids in the collapse of any residual gaseous inclusions in the glass), results in a glass product essentially free of gaseous inclusions. In addition, the oxidizing nature of the arsenic fining package allows for protection of the platinum based metal systems by preventing contamination as a result of tramp metals reduction. Other fining agents typically melt and release their oxygen far too early when added as fining agents to high melting temperature glasses and reabsorb O_2 too late during the conditioning process, thereby disabling their fining abilities. From an environmental point of view, it would be desirable to find alternative methods of making such high melting point and strain point glasses without having to employ arsenic as a fining agent. It would be particularly desirable to find methods for making such glasses via downdraw (especially fusion-like) processes. Unfortunately, previous efforts at doing so have been hindered by the production of unacceptable amounts of bubbles in the glass. This has been a particular problem with glasses which employ refractory metals such as platinum or platinum containing alloys in their molten glass delivery systems. This is because platinum can cause an electrochemical reaction to occur with the glass which results in bubble formation on or near the platinum (commonly referred to as blistering) contacting region of the glass.

SUMMARY OF THE INVENTION

We have found that by maintaining a low amount of water in the glass during the glass forming process, other fining constituents which are normally less efficient at high melting temperatures (melting temperature is defined herein as the temperature at which the glass exhibits a viscosity of 200 poise), e.g. Sb_2O_3, CeO_2, SnO_2, Fe_2O_3, and mixtures thereof, can be employed if needed in place of As_2O_3 to facilitate successful fining of the glass. Maintaining a low amount of water in the glass thus enables the formation of high melting point glasses (ie., glasses wherein the temperature at which the viscosity corresponds to 200 poise is greater than about 1500° C.) which are essentially or substantially arsenic-free. By substantially arsenic-free it is meant that such glasses have less than 0.02 mole percent As_2O_3 (such amounts are normally present as a result of raw material impurity). The invention also enables the formation of such high melting point glasses using manufacturing systems which employ platinum or platinum containing alloys which contact the glass during the melting or forming steps of the manufacturing process. These methods are particularly suited for forming glasses which are formed using a downdraw process, such as, for example, Corning Code 1737.

One manner of measuring the water content in the glass is by measuring beta-OH (β-OH). β-OH, as used herein, is a measure of the hydroxyl content in the glass as measured by IR spectroscopy, and is determined using the fundamental hydroxyl absorption, which for this material occurs at about 2809 nm. The β-OH is the linear absorption coefficient (absorbance/mm thickness) of the material at 2809 nm. The equation below shows how β-OH is calculated from the sample's IR transmittance spectrum.

$$\beta\text{-OH}=(1/X)\ \mathrm{LOG}_{10}\ (T_1/T_2)$$

where X is the sample thickness in millimeters, T_1 is the sample transmittance at the reference wavelength (2600 nm) and T_2 is the minimum sample transmittance of the hydroxyl absorption wavelength (2809 nm). The reference wavelength compensates for signal loss due to surface reflections, scatter, and refraction in the sample, and is chosen from a region of no absorption and as close as possible to the absorption wavelength of interest.

In a preferred embodiment of the present invention for forming low arsenic containing glasses via a downdraw sheet forming process, the batch constituents are selected so that the resultant glass has a water content therein, as indicated by β-OH level, which is less than 0.5, more preferably less than 0.4, and most preferably less than 0.35.

Preferably, the glasses formed in accordance with the invention are formed using less than 0.1 mole percent As_2O_3, and most preferably are essentially free of As_2O_3 in the resultant glass. We have found that silicate glasses (especially aluminosilicate and borosilicate glasses) formulated to result in such β-OH values in the resultant formed glass can be fined using less than 0.02 mole percent As_2O_3, expressed as the amount of As_2O_3 present in the resultant glass. Even when formed using a downdraw process employing a platinum based metal delivery system, such glasses can be formed without any significant amounts of electrochemical blistering occurring. In the most preferred embodiment, in order to facilitate fining of these glasses, Sb_2O_3, CeO_2, SnO_2, Fe_2O_3, and mixtures thereof are added to such glasses, alone or in combination, in an amount between about 0.02–2 mole percent. In a preferred embodiment, Sb_2O_3 is added in an amount between about 0.2–0.5 mole percent.

The water content or β-OH value of the glass can be reduced in a variety of ways. For example, simply by appropriate selection of batch materials, the water level in the glass can be adjusted to some extent. Further water reduction can be achieved by adding drying agents, such as halide materials. For example, halide containing materials may be added in an amount which results in the final glass having a composition between about 0.1 to 4 mole percent halide, more preferably 0.1 to 2 mole percent halide, and most preferably about 0.1 percent halide. In a preferred embodiment for forming the glass composition disclosed in the example, 0.4 mole percent chlorine is batched, e.g. as $CaCl_2$, resulting in about 0.15 to 0.19 mole percent Cl in the resultant glass.

Additionally, it is desirable to keep the sum of the partial pressures of all dissolved volatile gases below 1 atmosphere. One method of facilitating this result is by limiting the amount of sulfur in the resultant glass by appropriate selection of batch materials. Preferably, selection of batch materials should be made so that the sulfur, expressed as SO_3, in the resultant formed glass is as low as possible, preferably less than 100 ppm, more preferably less than 50, and most preferably less than 25 ppm.

The methods in accordance with the present invention are particularly advantageous in forming high strain point aluminoborosilicate glasses such as, for example, those having

a composition, expressed in terms of mole percent on the oxide basis, of

SiO_2	60–73	MgO	0–5
Al_2O_3	8–14	CaO	1–13
B_2O_3	5–17	SrO	0–8
TiO_2	0–5	BaO	0–14
Ta_2O_5	0–5		

More preferably, the base glass has a composition, expressed in terms of mole percent on the oxide basis, of

SiO_2	64–70	MgO	0–5
Al_2O_3	9.5–14	CaO	3–13
B_2O_3	5–12	SrO	0–5.5
TiO_2	0–5	BaO	2–8
Ta_2O_5	0–5	MgO + CaO + SrO + BaO	10–20.

With the exception of the low water content, glasses within this preferred composition range are disclosed, for example, in U.S. Pat. No. 5,374,595, the specification of which is hereby incorporated by reference. Preferred glasses formed in accordance with the present invention exhibit linear coefficients of thermal expansion over the temperature range of 0°–300° C. between $32–46\times10^{-7}$/°C., more preferably between $32–40\times10^{-7}$/°C., strain points higher than 630° C., more preferably higher than 640° C., and most preferably greater than 650° C. liquidus temperatures less than 1125° C., liquidus viscosities which are sufficient to enable formation by a downdraw manufacturing process, preferably greater than 400,000, and more preferably greater than 600,000 poises (60,000 Pa·s), a weight loss of less than 2 mg/cm^2 after immersion for 24 hours in an aqueous 5% by weight HCl solution at 95° C., long term stability against devitrification at melting and forming temperatures, and melting viscosities of about 200 poises (20 Pa·s) at less than 1675° C. The methods of the present invention may be employed in glasses having compositions within the boundaries set forth above, such as, for example, glasses listed as examples in U.S. Pat. No. 5,374,595, thereby enabling such glasses to be fined and formed without having to use arsenic.

In the most preferred glasses, in addition to the low water level, the level of Al_2O_3 will exceed that of B_2O_3 and in the most preferred glasses the composition will consist essentially, expressed in terms of mole percent, of about

SiO_2	65–69	MgO	1–5
Al_2O_3	10–12	CaO	3–9
B_2O_3	7–10	SrO	1–3
TiO_2	0–3	BaO	2–5
Ta_2O_5	0–3	MgO + CaO + SrO + BaO	11–16

Preferably, the ratio Al_2O_3:B_2O_3 in such glasses is greater than 1.

The invention thus enables the formation of silicate sheet glasses having high melting points (greater than 1500° C.), as well as the formation of silicate sheet glasses using manufacturing processes which employ refractory metals such as molybdenum and platinum in their forming regions. Forming region, as used herein, refers to the portion of the manufacturing process prior to which the final form of the glass is imparted to the glass, and includes the melting, conditioning, and fining portions of the manufacturing process.

BRIEF DESCRIPTION OF THE DRAWINGS

FIG. **1** illustrates a humidity controlled enclosure for use in accordance with the present invention.

DETAILED DESCRIPTION OF THE INVENTION

The present invention relates to silicate glass compositions and methods of making such silicate glass compositions while employing little or no arsenic. The preferred glasses are aluminosilicate or borosilicate glasses. The preferred manufacturing processes for such glasses is via a downdraw sheet manufacturing process. As used herein, downdraw sheet manufacturing process refers to any form of glass sheet manufacturing process in which glass sheets are formed while traveling in a downward direction. In the fusion or overflow downdraw forming process, molten glass flows into a trough, then overflows and runs down both sides of a pipe, fusing together at what is known as the root (where the pipe ends and the two overflow portions of glass rejoin), and is drawn downward until cool. The overflow downdraw sheet manufacturing process is described, for example, in U.S. Pat. No. 3,338,696 (Dockerty) and U.S. Pat. No. 3,682,609 (Dockerty). One advantage to the fusion forming process is that the glass sheet can be formed without the glass surface contacting any refractory forming surfaces. This provides for a smooth, contaminant-free surface. In addition, this technique is capable of forming very flat and thin sheets to very high tolerances. Consequently, fusion formed glass sheets, unlike float glass sheets, do not require costly polishing steps for TFT and STN LCD applications.

Other forms of downdraw sheet forming techniques include the slot draw and redraw forming techniques. In the slot draw technique, molten glass flows into a trough having a machined slot in the bottom. The sheets of glass are pulled down through the slot. The quality of the glass is obviously dependent on the accuracy of the machined slot. Redraw processes generally involve preforming a glass composition into a block of some shape, then reheating and drawing the glass downwardly into a thinner sheet product.

The glasses of the present invention preferably have less than 0.2 mole percent As_2O_3, more preferably less than 0.1 mole percent As_2O_3, and most preferably less than 0.02 mole percent As_2O_3 (an amount which is normally present as a result of raw material impurity).

It is believed that the method described herein are applicable to a wide variety of glasses, particularly those formed via downdraw manufacturing processes which employ platinum in their forming regions. Application of the invention to Corning Code 1737 glass, for example, is demonstrated as follows, with reference to Table I below. These glasses were prepared in a laboratory-scaled continuous melting unit similar to the overflow downdraw melting units typically used for commercial production of this type of product. This experimental melting unit employs a platinum/rhodium alloy refractory metal delivery system, wherein the molten glass contacts the platinum alloy metal. Example 4 of Table I corresponds closely to commercially available Corning Code 1737 glass, and was fined accordingly using an amount of arsenic which resulted in about 0.4 mole percent being present in the resultant glass. Examples 1, 2, and 3 illustrate the effect that decreasing amounts of water has on these compositions. As the β-OH values of the glass decrease, so do the gaseous inclusions (Inc./lb.) in glass. In these examples, gaseous inclusions are primarily a result of electrochemical blistering caused by the platinum alloy pipes which deliver the molten glass, and consequently accurately mimic the manufacturing processes employing metals such as platinum. Gaseous inclusions were measured on a per pound basis over a period of two to three days. As illustrated by the examples, the inclusions per pound dropped signifi-

cantly with each decrease of β-OH value. The fact that this was done without having to use As_2O_3 as a fining agent makes this accomplishment significant.

Table I records similar glass compositions of varying β-OH levels, expressed in terms of parts by weight on the oxide basis, illustrating the invention. Inasmuch as the sum of the individual constituents totals or very closely approximates 100, for all practical purposes the reported values may be deemed to represent weight percent. Table IA records the same glass compositions expressed in terms of mole percent on the oxide basis. The actual batch ingredients may comprise any materials, either oxides or other compounds, which, when melted together with the other batch components, will be converted into the desired oxide in the proper proportions. For example, $SrCO_3$ and $CaCO_3$ can provide the source of SrO and CaO, respectively. In Example 3, Cl was added as $CaCl_2$ at a level of 0.2 weight percent in excess of the batch, resulting in about 0.087 weight percent Cl retained in the resultant glass. About 2.7 weight percent water in excess of the batch was added to Examples 1 and 4.

Table I also lists measurements of several chemical and physical properties determined on the glasses in accordance with techniques conventional in the glass art. Thus, the linear coefficient of thermal expansion (CTE) over the temperature range 0°–300° C. expressed in terms of $\times 10^{-7}$/°C., and the softening point (S.P.), annealing point (A.P.), and strain point (St.P.) expressed in terms of °C., were determined by fiber elongation. The durability (HCl Dur.) in HCl was determined by measuring the weight loss (mg/cm^2) after immersion in a bath of aqueous 5% by weight HCl at 95° C. for 24 hours.

The liquidus temperatures (Liq.Temp.) of the glasses were measured using the standard liquidus method, which involves placing crushed glass particles in a platinum boat, placing the boat in a furnace having a region of gradient temperatures, heating the boat in an appropriate temperature region for 24 hours, and determining by means of microscopic examination the highest temperature at which crystals appear in the interior of the glass. The melting temperature (M.P., in °C.) (defined as the temperature at which the glass melt demonstrates a viscosity of 200 poises [20 Pa.s]) was calculated employing the Fulcher equation as fit to the high temperature viscosity data. The liquidus viscosity (Liq. Vis.) was also calculated using the Fulcher equation coefficients, and is expressed in terms of ×1,000,000 poises (100,000 Pa.s). SnO_2 was added to examples 1–3 in an amount suitable to replicate melting conditions in production, wherein the tin electrodes employed in melting the glass result in residual tin oxide in the resultant glass.

TABLE I

	1	2	3	4
SiO_2	59.49	58.82	58.91	57.07
Al_2O_3	16.4	16.7	16.58	16.46
B_2O_3	8.29	8.3	8.21	8.35
MgO	0.737	0.739	0.765	0.77
CaO	4.109	4.111	4.116	4.21
SrO	1.889	1.883	1.887	1.88
BaO	8.6	8.59	8.61	9.49
SnO_2	0.062	0.09	0.092	
Sb_2O_3	1.857	1.852	1.856	0
As_2O_3	0	0	0	1.11
% Added H_2O	2.70	0	0	2.7
Cl	0	0	0.087	0
β-OH	0.481	0.41	0.358	0.440

TABLE I-continued

	1	2	3	4
Inc./lb.	15.2	2.06	0.26	.21
S.P.	973	976	977	968
M.P.	1641	1638	1644	1625
St. Pt.	660	665	664	658
A.P.	717	719	720	714
Liq. Temp.	1080	1080	1090	1050
Lig. Vis.	1.37	1.4	1.06	2.51
HCl Dur.	0.46	0.44	0.45	0.61
CTE	36.3	36.6	36.6	37.6

TABLE IA

	1	2	3	4
SiO_2	68.6	68.2	68.3	67.3
Al_2O_3	11.1	11.4	11.3	11.4
B_2O_3	8.25	8.31	8.22	8.5
MgO	1.27	1.28	1.32	1.35
CaO	5.08	5.11	5.11	5.32
SrO	1.26	1.27	1.27	1.28
BaO	3.89	3.9	3.91	4.39
SnO_2	0.03	0.04	0.04	—
Sb_2o_3	0.44	0.44	0.44	—
As_2O_3				0.4

These examples, which are meant to be illustrative and not limiting, demonstrate that aluminoborosilicate glasses such as those falling within the compositional ranges described above can be made using downdraw manufacturing processes.

In a preferred embodiment of the invention, the glass is formed in a manufacturing system which employs platinum, molybdenum, palladium, rhodium or an alloy thereof in contacting relationship with the glass, and the partial vapor pressure of hydrogen outside this portion of the manufacturing ssytem relative to the partial vapor pressure of hydrogen in the glass or inside that manufacturing vessel. The partial pressure of hydrogen outside the vessel can be controlled, for example, by enclosing part of the vessel in an enclosure, and varying the partial pressure of hydrogen, or the dew point, inside the enclosure as desired. By so controlling the relative partial pressures of hydrogen inside versus outside the platinum or molybdenum containing portion of the glass manufacturing system, we can control, and if desired, reduce the amount of surface blisters which were heretofore problematic in such glass manufacturing systems which employed platinum or molybdenum. The partial vapor pressure of hydrogen inside and outside the system can be controlled, for example, by controlling the partial vapor pressure of water inside and outside the system. The desired relative partial pressures inside versus outside the forming vessels depends upon whether the forming vessel contains platinum or molybdenum (or palladium or rhodium) as a glass contacting material.

For example, platinum is desirable for use in glass forming vessels primarily because of its inert properties. However, platinum enables hydrogen migration to occur from the glass melt through the platinum, thereby creating an oxygen rich layer at the glass/platinum interface which results in surface blisters. Consequently, for the platinum glass manufacturing vessels, it is most desirable to maintain the relative inside and outside partial pressures of hydrogen to be substantially equal, so that no migration of hydrogen, either in or out of the glass manufacturing vessel, occurs. However, if any migration is to occur, it is more desirable

that it occur from the outside in, and thus in another embodiment the partial pressure of hydrogen outside the platinum or molybdenum manufacturing vessel is maintained at a higher level then is present inside the vessel.

On the other hand, molybdenum acts as a reducing material toward oxide melts. Therefore it is desirable to maintain a partial pressure of hydrogen outside the molybdenum containing forming vessel which is lower than that inside the forming vessel, to reduce the amount of blisters formed as a result of reduction of the glass constituents (e.g. formation of SO_2 bubbles as a result of reduction of dissolved SO_3).

In another preferred embodiment, a measurement device is used to measure the relative partial pressures of hydrogen inside versus outside the manufacturing vessel, and the humidity or dew point outside the vessel is then controlled accordingly. A preferred such measurement apparatus is shown in FIG. **1**. Platinum vessel **10** includes platinum walls **12** through which molten glass **13** is flowing. The platinum walls **12** of vessel **10** can have any shape (e.g. round or rectangular in cross-section), and the direction of flow of the molten glass through vessel **10** is not important. A platinum flag electrode **14** is immersed into the molten glass. By platinum flag, it is meant a flat sheet of platinum, so that the both sides of the platinum contact the molten glass, and therefore the flag does not experience hydrogen permeation. Also immersed into the molten glass **13** is a platinum tube **20**, the interior of which is in contact with the atmosphere outside platinum vessel **10**. Both flag electrode **14** and the platinum tube **20** are isolated from the platinum manufacturing vessel **10** via an insulating material **24**. The flag electrode **14** and platinum tube **20** are then connected as illustrated in FIG. **1**. Controller **15** is used to adjust the voltage from variable d.c. power source **16** necessary to maintain the target potential between electrodes **14** and **20**. The current necessary to sustain this voltage is then read from ammeter **17** as an indicator of the flow of hydrogen through the platinum wall **20**, and thus platinum wall **12** as well. For example, an increase in current indicates a net decrease in the rate of hydrogen migration out of the glass and into the atmosphere outside the Pt system. Conversely, a decrease in current would indicate a net increase in the rate of hydrogen migration out of the glass and into the atmosphere.

The apparatus illustrated in FIG. **1** is enclosed by enclosure **30** (shown schematically), which enables the control of the partial pressure of hydrogen surrounding the platinum vessel **10**. Thus, if the measurement system described above indicates a change from the target potential, the humidity inside enclosure **30** can be adjusted to correct for this change. Other variations within the scope of the claimed invention will be apparent to those skilled in the art. For example, the potential between flag **14** and platinum tube **20** could be monitored simply by a voltage regulator, and a signal produced relative to the voltage measured, the signal then being sent to a control device capable of increasing or decreasing the humidity or dew point in the enclosure in response to the signal. In addition, while in FIG. **1**, only a portion of the vessel **10** is enclosed, in a preferred embodiment the entire portion of the manufacturing process employing platinum vessels is enclosed. Clearly, a similar control system can be devised if the partial pressure of hydrogen is varied directly.

Such control of the relative partial pressures of hydrogen, as well as the measuring device described above, are explained in more detail in U.S. patent application Ser. No. 08/736,848, filed simultaneously herewith, the specification of which is hereby incorporated by reference.

Although the invention has been described in detail for the purpose of illustration, it is understood that such detail is solely for that purpose and variations can be made therein by those skilled in the art without departing from the spirit and scope of the invention which is defined by the following claims.

What is claimed is:

1. A method of making a silicate glass comprising:

melting and downdraw forming a silicate sheet glass and selecting batch constituents of said silicate glass so that the resultant glass contains less than 0.2 mole percent arsenic expressed as As_2O_3, and the β-OH of said glass is below about 0.5/mm.

2. The method of claim **1**, wherein said downdraw glass manufacturing process is a sheet forming downdraw process.

3. The method of claim **2**, wherein the batch constituents and process control variables in said melting step are adjusted so that the β-OH is below 0.4/mm.

4. The method of claim **2**, wherein the batch constituents and process control variables in said melting step are adjusted so that the β-OH is below 0.35/mm.

5. The method of claim **2**, wherein said melting step comprises forming said sheet using a downdraw process and said glass is contacted with platinum during said melting or forming steps.

6. The method of claim **5**, wherein said downdraw process in said melting step is a fusion process.

7. The method of claim **2**, wherein said melting step further comprises employing a fining agent selected from the group consisting of Sb_2O_3, CeO_2, SnO_2, Fe_2O_3, halide containing compounds, and mixtures thereof.

8. The method of claim **3**, wherein the batch constituents and process control variables are adjusted so that said glass comprises less than 0.1 mole percent AS_2O_3.

9. The method of claim **5**, wherein the batch constituents and process control variables are adjusted so that said glass in said melting step is essentially free of arsenic.

10. The method of claim **2**, wherein said melting step comprises employing antimony containing material in an amount which results in the resultant glass having between 0.02 to 1 mole percent Sb_2O_3.

11. The method of claim **7**, wherein said melting step comprises employing a halide containing compound in an amount sufficient to result in about 0.1 to 2 mole percent halide in the resultant glass.

12. The method of claim **11**, wherein the halide in said melting step is chlorine.

13. The method of claim **2**, wherein the resultant glass comprises an aluminoborosilicate glass, expressed in terms of mole percent on the oxide basis, having:

SiO_2	60–73	MgO	0–5
Al_2O_3	8–14	CaO	1–13
B_2O_3	5–17	SrO	0–8
TiO_2	0–5	BaO	0–14
Ta_2O_5	0–5.		

14. The method of claim **13**, wherein the resultant glass is essentially free of alkali metal oxides and exhibits a strain point higher than 630° C., and a linear coefficient of thermal expansion over the temperature range 0°–300° C. between $32–46\times10^{-7}$/°C.

15. A method of making a silicate glass comprising:

melting a silicate glass mixture having a melting point greater than 1500° C., selecting batch constituents in said melting step so that the resultant glass contains less

than 0.2 mole percent arsenic expressed as As_2O_3, and the β-OH of said glass is below about 0.5/mm, and forming a glass from said mixture; and at some point during said method of making said glass is in the presence of platinum.

16. The method of claim **15**, wherein the batch constituents and process control variables are adjusted so that the β-OH is below 0.4/mm.

17. The method of claim **15**, wherein the batch constituents and process control variables are adjusted so that the β-OH is below 0.35/mm.

18. The method of claim **15**, further comprising forming said sheet using a process which does not employ floating of the glass sheet on a molten tin bath.

19. The method of claim **16**, further comprising forming a sheet of said glass using a process wherein glass is contacted with platinum during the melting or forming process.

20. The method of claim **19**, wherein said process is a downdraw sheet forming process.

21. The method of claim **18**, wherein the batch constituents and process control variables are adjusted so that said glass comprises less than 0.1 mole percent AS_2O_3.

22. The method of claim **19**, wherein the batch constituents and process control variables are adjusted so that said glass in said melting step is essentially free of arsenic.

23. The method of claim **18**, wherein said glass in said melting step comprises an aluminoborosilicate glass, expressed in terms of mole percent on the oxide basis, having:

SiO_2	60–73	MgO	0–5
Al_2O_3	8–14	CaO	1–13
B_2O_3	5–17	SrO	0–8
TiO_2	0–5	BaO	0–14
Ta_2O_5	0–5.		

24. The method of claim **23**, wherein said glass in said melting step is essentially free of alkali metal oxides and exhibits a strain point higher than 630° C., and a linear coefficient of thermal expansion over the temperature range 0°–300° C. between $32–46\times10^{-7}$/°C.

25. The method of claim **1**, wherein said melting and forming step comprises melting and forming a mixed oxide silicate glass.

26. The method of claim **1**, wherein said melting and forming step comprises melting and forming a glass which is essentially alkali free.

27. The method of claim **15**, wherein said melting step comprises melting a mixed oxide silicate glass.

28. The method of claim **15**, wherein said melting step comprises melting a glass which is essentially alkali free.

29. The method of claim **1**, wherein said glass sheet is essentially free of gaseous inclusions.

30. The method of claim **15**, wherein said sheet is essentially bubble-free.

* * * * *