US009824216B1

(12) **United States Patent**
Khalid et al.

(10) **Patent No.: US 9,824,216 B1**
(45) **Date of Patent: Nov. 21, 2017**

(54) **SUSCEPTIBLE ENVIRONMENT DETECTION SYSTEM**

(71) Applicant: **FireEye, Inc.**, Milpitas, CA (US)

(72) Inventors: **Yasir Khalid**, Fremont, CA (US); **Shivani Deshpande**, Fremont, CA (US)

(73) Assignee: **FireEye, Inc.**, Milpitas, CA (US)

(*) Notice: Subject to any disclaimer, the term of this patent is extended or adjusted under 35 U.S.C. 154(b) by 169 days.

(21) Appl. No.: **14/986,428**

(22) Filed: **Dec. 31, 2015**

(51) **Int. Cl.**
G06F 21/56 (2013.01)
G06F 21/55 (2013.01)
G06F 21/57 (2013.01)

(52) **U.S. Cl.**
CPC ***G06F 21/566*** (2013.01); ***G06F 21/554*** (2013.01); ***G06F 21/577*** (2013.01); *G06F 2221/033* (2013.01)

(58) **Field of Classification Search**
None
See application file for complete search history.

(56) **References Cited**

U.S. PATENT DOCUMENTS

4,292,580	A	9/1981	Ott et al.
5,175,732	A	12/1992	Hendel et al.
5,440,723	A	8/1995	Arnold et al.
5,490,249	A	2/1996	Miller
5,657,473	A	8/1997	Killean et al.
5,842,002	A	11/1998	Schnurer et al.
5,978,917	A	11/1999	Chi
6,088,803	A	7/2000	Tso et al.
6,094,677	A	7/2000	Capek et al.
6,108,799	A	8/2000	Boulay et al.
6,269,330	B1	7/2001	Cidon et al.
6,272,641	B1	8/2001	Ji
6,279,113	B1	8/2001	Vaidya
6,298,445	B1	10/2001	Shostack et al.
6,357,008	B1	3/2002	Nachenberg

(Continued)

FOREIGN PATENT DOCUMENTS

GB	2439806	A	1/2008
GB	2490431	A	10/2012

(Continued)

OTHER PUBLICATIONS

Marchette, David J., "Computer Intrusion Detection and Network Monitoring: A Statistical Viewpoint", ("Marchette"), (2001).

(Continued)

Primary Examiner — Michael R Vaughan
(74) *Attorney, Agent, or Firm* — Rutan & Tucker, LLP

(57) **ABSTRACT**

A computerized technique wherein a received object is analyzed using a plurality of information sources to determine context information, wherein one information source comprises configuration information determined from a client device. One or more software profiles are generated based on the context information in order to provision one or more virtual machines of a dynamic analysis logic system. One or more work orders are generated based on the one or more software profiles. A priority order is assigned to the one or more software profiles. A dynamic analysis is scheduled based on the work orders and the assigned priority order to determine one or more susceptible software environments, and an alert is generated comprising information to update one or more susceptible environments in real time.

20 Claims, 6 Drawing Sheets

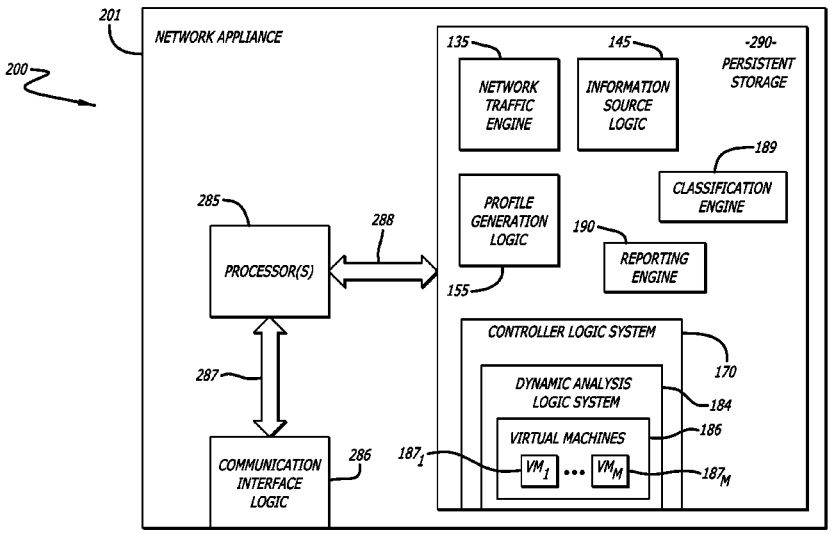

WIZ, Inc. EXHIBIT - 1077
WIZ, Inc. v. Orca Security LTD.

(56) **References Cited**

U.S. PATENT DOCUMENTS

6,424,627 B1 7/2002 Sørhaug et al.
6,442,696 B1 8/2002 Wray et al.
6,484,315 B1 11/2002 Ziese
6,487,666 B1 11/2002 Shanklin et al.
6,493,756 B1 12/2002 O'Brien et al.
6,550,012 B1 4/2003 Villa et al.
6,775,657 B1 8/2004 Baker
6,831,893 B1 12/2004 Ben Nun et al.
6,832,367 B1 12/2004 Choi et al.
6,895,550 B2 5/2005 Kanchirayappa et al.
6,898,632 B2 5/2005 Gordy et al.
6,907,396 B1 6/2005 Muttik et al.
6,941,348 B2 9/2005 Petry et al.
6,971,097 B1 11/2005 Wallman
6,981,279 B1 12/2005 Arnold et al.
7,007,107 B1 2/2006 Ivchenko et al.
7,028,179 B2 4/2006 Anderson et al.
7,043,757 B2 5/2006 Hoefelmeyer et al.
7,069,316 B1 6/2006 Gryaznov
7,080,407 B1 7/2006 Zhao et al.
7,080,408 B1 7/2006 Pak et al.
7,093,002 B2 8/2006 Wolff et al.
7,093,239 B1 8/2006 van der Made
7,096,498 B2 8/2006 Judge
7,100,201 B2 8/2006 Izatt
7,107,617 B2 9/2006 Hursey et al.
7,159,149 B2 1/2007 Spiegel et al.
7,213,260 B2 5/2007 Judge
7,231,667 B2 6/2007 Jordan
7,240,364 B1 7/2007 Branscomb et al.
7,240,368 B1 7/2007 Roesch et al.
7,243,371 B1 7/2007 Kasper et al.
7,249,175 B1 7/2007 Donaldson
7,287,278 B2 10/2007 Liang
7,308,716 B2 12/2007 Danford et al.
7,328,453 B2 2/2008 Merkle, Jr. et al.
7,346,486 B2 3/2008 Ivancic et al.
7,356,736 B2 4/2008 Natvig
7,386,888 B2 6/2008 Liang et al.
7,392,542 B2 6/2008 Bucher
7,418,729 B2 8/2008 Szor
7,428,300 B1 9/2008 Drew et al.
7,441,272 B2 10/2008 Durham et al.
7,448,084 B1 11/2008 Apap et al.
7,458,098 B2 11/2008 Judge et al.
7,464,404 B2 12/2008 Carpenter et al.
7,464,407 B2 12/2008 Nakae et al.
7,467,408 B1 12/2008 O'Toole, Jr.
7,478,428 B1 1/2009 Thomlinson
7,480,773 B1 1/2009 Reed
7,487,543 B2 2/2009 Arnold et al.
7,496,960 B1 2/2009 Chen et al.
7,496,961 B2 2/2009 Zimmer et al.
7,519,990 B1 4/2009 Xie
7,523,493 B2 4/2009 Liang et al.
7,530,104 B1 5/2009 Thrower et al.
7,540,025 B2 5/2009 Tzadikario
7,546,638 B2 6/2009 Anderson et al.
7,565,550 B2 7/2009 Liang et al.
7,568,233 B1 7/2009 Szor et al.
7,584,455 B2 9/2009 Ball
7,603,715 B2 10/2009 Costa et al.
7,607,171 B1 10/2009 Marsden et al.
7,639,714 B2 12/2009 Stolfo et al.
7,644,441 B2 1/2010 Schmid et al.
7,657,419 B2 2/2010 van der Made
7,676,841 B2 3/2010 Sobchuk et al.
7,698,548 B2 4/2010 Shelest et al.
7,707,633 B2 4/2010 Danford et al.
7,712,136 B2 5/2010 Sprosts et al.
7,730,011 B1 6/2010 Deninger et al.
7,739,740 B1 6/2010 Nachenberg et al.
7,779,463 B2 8/2010 Stolfo et al.
7,784,097 B1 8/2010 Stolfo et al.
7,832,008 B1 11/2010 Kraemer
7,836,502 B1 11/2010 Zhao et al.
7,849,506 B1 12/2010 Dansey et al.
7,854,007 B2 12/2010 Sprosts et al.
7,869,073 B2 1/2011 Oshima
7,877,803 B2 1/2011 Enstone et al.
7,904,959 B2 3/2011 Sidiroglou et al.
7,908,660 B2 3/2011 Bahl
7,930,738 B1 4/2011 Petersen
7,937,387 B2 5/2011 Frazier et al.
7,937,761 B1 5/2011 Bennett
7,949,849 B2 5/2011 Lowe et al.
7,996,556 B2 8/2011 Raghavan et al.
7,996,836 B1 8/2011 McCorkendale et al.
7,996,904 B1 8/2011 Chiueh et al.
7,996,905 B2 8/2011 Arnold et al.
8,006,305 B2 8/2011 Aziz
8,010,667 B2 8/2011 Zhang et al.
8,020,206 B2 9/2011 Hubbard et al.
8,028,338 B1 9/2011 Schneider et al.
8,042,184 B1 10/2011 Batenin
8,045,094 B2 10/2011 Teragawa
8,045,458 B2 10/2011 Alperovitch et al.
8,069,484 B2 11/2011 McMillan et al.
8,087,086 B1 12/2011 Lai et al.
8,171,553 B2 5/2012 Aziz et al.
8,176,049 B2 5/2012 Deninger et al.
8,176,480 B1 5/2012 Spertus
8,201,246 B1 6/2012 Wu et al.
8,204,984 B1 6/2012 Aziz et al.
8,214,905 B1 7/2012 Doukhvalov et al.
8,220,055 B1 7/2012 Kennedy
8,225,288 B2 7/2012 Miller et al.
8,225,373 B2 7/2012 Kraemer
8,233,882 B2 7/2012 Rogel
8,234,640 B1 7/2012 Fitzgerald et al.
8,234,709 B2 7/2012 Viljoen et al.
8,239,944 B1 8/2012 Nachenberg et al.
8,260,914 B1 9/2012 Ranjan
8,266,091 B1 9/2012 Gubin et al.
8,286,251 B2 10/2012 Eker et al.
8,291,499 B2 10/2012 Aziz et al.
8,307,435 B1 11/2012 Mann et al.
8,307,443 B2 11/2012 Wang et al.
8,312,545 B2 11/2012 Tuvell et al.
8,321,936 B1 11/2012 Green et al.
8,321,941 B2 11/2012 Tuvell et al.
8,332,571 B1 12/2012 Edwards, Sr.
8,365,286 B2 1/2013 Poston
8,365,297 B1 1/2013 Parshin et al.
8,370,938 B1 2/2013 Daswani et al.
8,370,939 B2 2/2013 Zaitsev et al.
8,375,444 B2 2/2013 Aziz et al.
8,381,299 B2 2/2013 Stolfo et al.
8,402,529 B1 3/2013 Green et al.
8,413,235 B1 4/2013 Chen et al.
8,464,340 B2 6/2013 Ahn et al.
8,479,174 B2 7/2013 Chiriac
8,479,276 B1 7/2013 Vaystikh et al.
8,479,291 B1 7/2013 Bodke
8,510,827 B1 8/2013 Leake et al.
8,510,828 B1 8/2013 Guo et al.
8,510,842 B2 8/2013 Amit et al.
8,516,478 B1 8/2013 Edwards et al.
8,516,590 B1 8/2013 Ranadive et al.
8,516,593 B2 8/2013 Aziz
8,522,348 B2 8/2013 Chen et al.
8,528,086 B1 9/2013 Aziz
8,533,824 B2 9/2013 Hutton et al.
8,539,582 B1 9/2013 Aziz et al.
8,549,638 B2 10/2013 Aziz
8,555,391 B1 10/2013 Demir et al.
8,561,177 B1 10/2013 Aziz et al.
8,566,476 B2 10/2013 Shiffer et al.
8,566,946 B1 10/2013 Aziz et al.
8,584,094 B2 11/2013 Dadhia et al.
8,584,234 B1 11/2013 Sobel et al.
8,584,239 B2 11/2013 Aziz et al.
8,595,834 B2 11/2013 Xie et al.
8,627,476 B1 1/2014 Satish et al.

(56) **References Cited**

U.S. PATENT DOCUMENTS

8,635,696 B1 1/2014 Aziz
8,682,054 B2 3/2014 Xue et al.
8,682,812 B1 3/2014 Ranjan
8,689,333 B2 4/2014 Aziz
8,695,096 B1 4/2014 Zhang
8,713,631 B1 4/2014 Pavlyushchik
8,713,681 B2 4/2014 Silberman et al.
8,726,392 B1 5/2014 McCorkendale et al.
8,739,280 B2 5/2014 Chess et al.
8,776,229 B1 7/2014 Aziz
8,782,792 B1 7/2014 Bodke
8,789,172 B2 7/2014 Stolfo et al.
8,789,178 B2 7/2014 Kejriwal et al.
8,793,278 B2 7/2014 Frazier et al.
8,793,787 B2 7/2014 Ismael et al.
8,805,947 B1 8/2014 Kuzkin et al.
8,806,647 B1 8/2014 Daswani et al.
8,832,829 B2 9/2014 Manni et al.
8,850,570 B1 9/2014 Ramzan
8,850,571 B2 9/2014 Staniford et al.
8,881,234 B2 11/2014 Narasimhan et al.
8,881,271 B2 11/2014 Butler, II
8,881,282 B1 11/2014 Aziz et al.
8,898,788 B1 11/2014 Aziz et al.
8,935,779 B2 1/2015 Manni et al.
8,949,257 B2 2/2015 Shiffer et al.
8,984,638 B1 3/2015 Aziz et al.
8,990,939 B2 3/2015 Staniford et al.
8,990,944 B1 3/2015 Singh et al.
8,997,219 B2 3/2015 Staniford et al.
9,009,822 B1 4/2015 Ismael et al.
9,009,823 B1 4/2015 Ismael et al.
9,027,135 B1 5/2015 Aziz
9,071,638 B1 6/2015 Aziz et al.
9,104,867 B1 8/2015 Thioux et al.
9,106,630 B2 8/2015 Frazier et al.
9,106,694 B2 8/2015 Aziz et al.
9,118,715 B2 8/2015 Staniford et al.
9,159,035 B1 10/2015 Ismael et al.
9,171,160 B2 10/2015 Vincent et al.
9,176,843 B1 11/2015 Ismael et al.
9,189,627 B1 11/2015 Islam
9,195,829 B1 11/2015 Goradia et al.
9,197,664 B1 11/2015 Aziz et al.
9,223,972 B1 12/2015 Vincent et al.
9,225,740 B1 12/2015 Ismael et al.
9,241,010 B1 1/2016 Bennett et al.
9,251,343 B1 2/2016 Vincent et al.
9,262,635 B2 2/2016 Paithane et al.
9,268,936 B2 2/2016 Butler
9,275,229 B2 3/2016 LeMasters
9,282,109 B1 3/2016 Aziz et al.
9,294,501 B2 3/2016 Mesdaq et al.
9,300,686 B2 3/2016 Pidathala et al.
9,306,960 B1 4/2016 Aziz
9,306,974 B1 4/2016 Aziz et al.
9,311,479 B1 4/2016 Manni et al.
9,413,781 B2 8/2016 Cunningham et al.
9,560,059 B1 * 1/2017 Islam H04L 63/123
2001/0005889 A1 6/2001 Albrecht
2001/0047326 A1 11/2001 Broadbent et al.
2002/0018903 A1 2/2002 Kokubo et al.
2002/0038430 A1 3/2002 Edwards et al.
2002/0091819 A1 7/2002 Melchione et al.
2002/0095607 A1 7/2002 Lin-Hendel
2002/0116627 A1 8/2002 Tarbotton et al.
2002/0144156 A1 10/2002 Copeland
2002/0162015 A1 10/2002 Tang
2002/0166063 A1 11/2002 Lachman et al.
2002/0169952 A1 11/2002 DiSanto et al.
2002/0184528 A1 12/2002 Shevenell et al.
2002/0188887 A1 12/2002 Largman et al.
2002/0194490 A1 12/2002 Halperin et al.
2003/0021728 A1 1/2003 Sharpe et al.
2003/0074578 A1 4/2003 Ford et al.
2003/0084318 A1 5/2003 Schertz
2003/0101381 A1 5/2003 Mateev et al.
2003/0115483 A1 6/2003 Liang
2003/0188190 A1 10/2003 Aaron et al.
2003/0191957 A1 10/2003 Hypponen et al.
2003/0200460 A1 10/2003 Morota et al.
2003/0212902 A1 11/2003 van der Made
2003/0229801 A1 12/2003 Kouznetsov et al.
2003/0237000 A1 12/2003 Denton et al.
2004/0003323 A1 1/2004 Bennett et al.
2004/0006473 A1 1/2004 Mills et al.
2004/0015712 A1 1/2004 Szor
2004/0019832 A1 1/2004 Arnold et al.
2004/0047356 A1 3/2004 Bauer
2004/0083408 A1 4/2004 Spiegel et al.
2004/0088581 A1 5/2004 Brawn et al.
2004/0093513 A1 5/2004 Cantrell et al.
2004/0111531 A1 6/2004 Staniford et al.
2004/0117478 A1 6/2004 Triulzi et al.
2004/0117624 A1 6/2004 Brandt et al.
2004/0128355 A1 7/2004 Chao et al.
2004/0165588 A1 8/2004 Pandya
2004/0236963 A1 11/2004 Danford et al.
2004/0243349 A1 12/2004 Greifeneder et al.
2004/0249911 A1 12/2004 Alkhatib et al.
2004/0255161 A1 12/2004 Cavanaugh
2004/0268147 A1 12/2004 Wiederin et al.
2005/0005159 A1 1/2005 Oliphant
2005/0021740 A1 1/2005 Bar et al.
2005/0033960 A1 2/2005 Vialen et al.
2005/0033989 A1 2/2005 Poletto et al.
2005/0050148 A1 3/2005 Mohammadioun et al.
2005/0086523 A1 4/2005 Zimmer et al.
2005/0091513 A1 4/2005 Mitomo et al.
2005/0091533 A1 4/2005 Omote et al.
2005/0091652 A1 4/2005 Ross et al.
2005/0108562 A1 5/2005 Khazan et al.
2005/0114663 A1 5/2005 Cornell et al.
2005/0125195 A1 6/2005 Brendel
2005/0149726 A1 7/2005 Joshi et al.
2005/0157662 A1 7/2005 Bingham et al.
2005/0183143 A1 8/2005 Anderholm et al.
2005/0201297 A1 9/2005 Peikari
2005/0210533 A1 9/2005 Copeland et al.
2005/0238005 A1 10/2005 Chen et al.
2005/0240781 A1 10/2005 Gassoway
2005/0262562 A1 11/2005 Gassoway
2005/0265331 A1 12/2005 Stolfo
2005/0283839 A1 12/2005 Cowburn
2006/0010495 A1 1/2006 Cohen et al.
2006/0015416 A1 1/2006 Hoffman et al.
2006/0015715 A1 1/2006 Anderson
2006/0015747 A1 1/2006 Van de Ven
2006/0021029 A1 1/2006 Brickell et al.
2006/0021054 A1 1/2006 Costa et al.
2006/0031476 A1 2/2006 Mathes et al.
2006/0047665 A1 3/2006 Neil
2006/0070130 A1 3/2006 Costea et al.
2006/0075496 A1 4/2006 Carpenter et al.
2006/0095968 A1 5/2006 Portolani et al.
2006/0101516 A1 5/2006 Sudaharan et al.
2006/0101517 A1 5/2006 Banzhof et al.
2006/0117385 A1 6/2006 Mester et al.
2006/0123477 A1 6/2006 Raghavan et al.
2006/0143709 A1 6/2006 Brooks et al.
2006/0150249 A1 7/2006 Gassen et al.
2006/0161983 A1 7/2006 Cothrell et al.
2006/0161987 A1 7/2006 Levy-Yurista
2006/0161989 A1 7/2006 Reshef et al.
2006/0164199 A1 7/2006 Gilde et al.
2006/0173992 A1 8/2006 Weber et al.
2006/0179147 A1 8/2006 Tran et al.
2006/0184632 A1 8/2006 Marino et al.
2006/0191010 A1 8/2006 Benjamin
2006/0221956 A1 10/2006 Narayan et al.
2006/0236393 A1 10/2006 Kramer et al.
2006/0242709 A1 10/2006 Seinfeld et al.
2006/0248519 A1 11/2006 Jaeger et al.
2006/0248582 A1 11/2006 Panjwani et al.

(56) **References Cited**

U.S. PATENT DOCUMENTS

2006/0251104 A1 11/2006 Koga
2006/0288417 A1 12/2006 Bookbinder et al.
2007/0006288 A1 1/2007 Mayfield et al.
2007/0006313 A1 1/2007 Porras et al.
2007/0011174 A1 1/2007 Takaragi et al.
2007/0016951 A1 1/2007 Piccard et al.
2007/0019286 A1 1/2007 Kikuchi
2007/0033645 A1 2/2007 Jones
2007/0038943 A1 2/2007 FitzGerald et al.
2007/0064689 A1 3/2007 Shin et al.
2007/0074169 A1 3/2007 Chess et al.
2007/0094730 A1 4/2007 Bhikkaji et al.
2007/0101435 A1 5/2007 Konanka et al.
2007/0128855 A1 6/2007 Cho et al.
2007/0142030 A1 6/2007 Sinha et al.
2007/0143827 A1 6/2007 Nicodemus et al.
2007/0156895 A1 7/2007 Vuong
2007/0157180 A1 7/2007 Tillmann et al.
2007/0157306 A1 7/2007 Elrod et al.
2007/0168988 A1 7/2007 Eisner et al.
2007/0171824 A1 7/2007 Ruello et al.
2007/0174915 A1 7/2007 Gribble et al.
2007/0192500 A1 8/2007 Lum
2007/0192858 A1 8/2007 Lum
2007/0198275 A1 8/2007 Malden et al.
2007/0208822 A1 9/2007 Wang et al.
2007/0220607 A1 9/2007 Sprosts et al.
2007/0240218 A1 10/2007 Tuvell et al.
2007/0240219 A1 10/2007 Tuvell et al.
2007/0240220 A1 10/2007 Tuvell et al.
2007/0240222 A1 10/2007 Tuvell et al.
2007/0250930 A1 10/2007 Aziz et al.
2007/0256132 A2 11/2007 Oliphant
2007/0271446 A1 11/2007 Nakamura
2008/0005782 A1 1/2008 Aziz
2008/0018122 A1 1/2008 Zierler et al.
2008/0028463 A1 1/2008 Dagon et al.
2008/0040710 A1 2/2008 Chiriac
2008/0046781 A1 2/2008 Childs et al.
2008/0066179 A1 3/2008 Liu
2008/0072326 A1 3/2008 Danford et al.
2008/0077793 A1 3/2008 Tan et al.
2008/0080518 A1 4/2008 Hoeflin et al.
2008/0086720 A1 4/2008 Lekel
2008/0098476 A1 4/2008 Syversen
2008/0120722 A1 5/2008 Sima et al.
2008/0134178 A1 6/2008 Fitzgerald et al.
2008/0134334 A1 6/2008 Kim et al.
2008/0141376 A1 6/2008 Clausen et al.
2008/0184367 A1 7/2008 McMillan et al.
2008/0184373 A1 7/2008 Traut et al.
2008/0189787 A1 8/2008 Arnold et al.
2008/0201778 A1 8/2008 Guo et al.
2008/0209557 A1 8/2008 Herley et al.
2008/0215742 A1 9/2008 Goldszmidt et al.
2008/0222729 A1 9/2008 Chen et al.
2008/0263665 A1 10/2008 Ma et al.
2008/0295172 A1 11/2008 Bohacek
2008/0301810 A1 12/2008 Lehane et al.
2008/0307524 A1 12/2008 Singh et al.
2008/0313738 A1 12/2008 Enderby
2008/0320594 A1 12/2008 Jiang
2009/0003317 A1 1/2009 Kasralikar et al.
2009/0007100 A1* 1/2009 Field G06F 21/53
718/1
2009/0013408 A1 1/2009 Schipka
2009/0031423 A1 1/2009 Liu et al.
2009/0036111 A1 2/2009 Danford et al.
2009/0037835 A1 2/2009 Goldman
2009/0044024 A1 2/2009 Oberheide et al.
2009/0044272 A1 2/2009 Jarrett
2009/0044274 A1 2/2009 Budko et al.
2009/0064332 A1 3/2009 Porras et al.
2009/0077666 A1 3/2009 Chen et al.
2009/0083369 A1 3/2009 Marmor
2009/0083855 A1 3/2009 Apap et al.
2009/0089879 A1 4/2009 Wang et al.
2009/0094697 A1 4/2009 Provos et al.
2009/0113425 A1 4/2009 Ports et al.
2009/0125976 A1 5/2009 Wassermann et al.
2009/0126015 A1 5/2009 Monastyrsky et al.
2009/0126016 A1 5/2009 Sobko et al.
2009/0133125 A1 5/2009 Choi et al.
2009/0144823 A1 6/2009 Lamastra et al.
2009/0158430 A1 6/2009 Borders
2009/0172815 A1 7/2009 Gu et al.
2009/0187992 A1 7/2009 Poston
2009/0193293 A1 7/2009 Stolfo et al.
2009/0198651 A1 8/2009 Shiffer et al.
2009/0198670 A1 8/2009 Shiffer et al.
2009/0198689 A1 8/2009 Frazier et al.
2009/0199274 A1 8/2009 Frazier et al.
2009/0199296 A1 8/2009 Xie et al.
2009/0228233 A1 9/2009 Anderson et al.
2009/0241187 A1 9/2009 Troyansky
2009/0241190 A1 9/2009 Todd et al.
2009/0265692 A1 10/2009 Godefroid et al.
2009/0271867 A1 10/2009 Zhang
2009/0300415 A1 12/2009 Zhang et al.
2009/0300761 A1 12/2009 Park et al.
2009/0328185 A1 12/2009 Berg et al.
2009/0328221 A1 12/2009 Blumfield et al.
2010/0005146 A1 1/2010 Drako et al.
2010/0011205 A1 1/2010 McKenna
2010/0017546 A1 1/2010 Poo et al.
2010/0030996 A1 2/2010 Butler, II
2010/0031353 A1 2/2010 Thomas et al.
2010/0037314 A1 2/2010 Perdisci et al.
2010/0043073 A1 2/2010 Kuwamura
2010/0054278 A1 3/2010 Stolfo et al.
2010/0058474 A1 3/2010 Hicks
2010/0064044 A1 3/2010 Nonoyama
2010/0077481 A1 3/2010 Polyakov et al.
2010/0083376 A1 4/2010 Pereira et al.
2010/0115621 A1 5/2010 Staniford et al.
2010/0132038 A1 5/2010 Zaitsev
2010/0154056 A1 6/2010 Smith et al.
2010/0180344 A1 7/2010 Malyshev et al.
2010/0192223 A1 7/2010 Ismael et al.
2010/0220863 A1 9/2010 Dupaquis et al.
2010/0235831 A1 9/2010 Dittmer
2010/0251104 A1 9/2010 Massand
2010/0281102 A1 11/2010 Chinta et al.
2010/0281541 A1 11/2010 Stolfo et al.
2010/0281542 A1 11/2010 Stolfo et al.
2010/0287260 A1 11/2010 Peterson et al.
2010/0299754 A1 11/2010 Amit et al.
2010/0306173 A1 12/2010 Frank
2011/0004737 A1 1/2011 Greenebaum
2011/0025504 A1 2/2011 Lyon et al.
2011/0041179 A1 2/2011 Stahlberg
2011/0047594 A1 2/2011 Mahaffey et al.
2011/0047620 A1 2/2011 Mahaffey et al.
2011/0055907 A1 3/2011 Narasimhan et al.
2011/0078794 A1 3/2011 Manni et al.
2011/0093951 A1 4/2011 Aziz
2011/0099620 A1 4/2011 Stavrou et al.
2011/0099633 A1 4/2011 Aziz
2011/0099635 A1 4/2011 Silberman et al.
2011/0113231 A1 5/2011 Kaminsky
2011/0145918 A1 6/2011 Jung et al.
2011/0145920 A1 6/2011 Mahaffey et al.
2011/0145934 A1 6/2011 Abramovici et al.
2011/0167493 A1 7/2011 Song et al.
2011/0167494 A1 7/2011 Bowen et al.
2011/0173213 A1 7/2011 Frazier et al.
2011/0173460 A1 7/2011 Ito et al.
2011/0197277 A1 8/2011 Figlin et al.
2011/0219449 A1 9/2011 St. Neitzel et al.
2011/0219450 A1 9/2011 McDougal et al.
2011/0225624 A1 9/2011 Sawhney et al.
2011/0225655 A1 9/2011 Niemel et al.
2011/0247072 A1 10/2011 Staniford et al.
2011/0265182 A1 10/2011 Peinado et al.

(56) **References Cited**

U.S. PATENT DOCUMENTS

2011/0289582 A1 11/2011 Kejriwal et al.
2011/0302587 A1 12/2011 Nishikawa et al.
2011/0307954 A1 12/2011 Melnik et al.
2011/0307955 A1 12/2011 Kaplan et al.
2011/0307956 A1 12/2011 Yermakov et al.
2011/0314546 A1 12/2011 Aziz et al.
2012/0023593 A1 1/2012 Puder et al.
2012/0054869 A1 3/2012 Yen et al.
2012/0066698 A1 3/2012 Yanoo
2012/0079596 A1 3/2012 Thomas et al.
2012/0084859 A1 4/2012 Radinsky et al.
2012/0096553 A1 4/2012 Srivastava et al.
2012/0110667 A1 5/2012 Zubrilin et al.
2012/0117652 A1 5/2012 Manni et al.
2012/0121154 A1 5/2012 Xue et al.
2012/0124426 A1 5/2012 Maybee et al.
2012/0174186 A1 7/2012 Aziz et al.
2012/0174196 A1 7/2012 Bhogavilli et al.
2012/0174218 A1 7/2012 McCoy et al.
2012/0198279 A1 8/2012 Schroeder
2012/0210423 A1 8/2012 Friedrichs et al.
2012/0222121 A1 8/2012 Staniford et al.
2012/0255015 A1 10/2012 Sahita et al.
2012/0255017 A1 10/2012 Sallam
2012/0260342 A1 10/2012 Dube et al.
2012/0266244 A1 10/2012 Green et al.
2012/0278886 A1 11/2012 Luna
2012/0297489 A1 11/2012 Dequevy
2012/0330801 A1 12/2012 McDougal et al.
2012/0331553 A1 12/2012 Aziz et al.
2013/0014259 A1 1/2013 Gribble et al.
2013/0036472 A1 2/2013 Aziz
2013/0047257 A1 2/2013 Aziz
2013/0074185 A1 3/2013 McDougal et al.
2013/0086684 A1 4/2013 Mohler
2013/0097699 A1 4/2013 Balupari et al.
2013/0097706 A1 4/2013 Titonis et al.
2013/0111587 A1 5/2013 Goel et al.
2013/0117852 A1 5/2013 Stute
2013/0117855 A1 5/2013 Kim et al.
2013/0139264 A1 5/2013 Brinkley et al.
2013/0160125 A1 6/2013 Likhachev et al.
2013/0160127 A1 6/2013 Jeong et al.
2013/0160130 A1 6/2013 Mendelev et al.
2013/0160131 A1 6/2013 Madou et al.
2013/0167236 A1 6/2013 Sick
2013/0174214 A1 7/2013 Duncan
2013/0185789 A1 7/2013 Hagiwara et al.
2013/0185795 A1 7/2013 Winn et al.
2013/0185798 A1 7/2013 Saunders et al.
2013/0191915 A1 7/2013 Antonakakis et al.
2013/0196649 A1 8/2013 Paddon et al.
2013/0227691 A1 8/2013 Aziz et al.
2013/0246370 A1 9/2013 Bartram et al.
2013/0247186 A1 9/2013 LeMasters
2013/0263260 A1 10/2013 Mahaffey et al.
2013/0291109 A1 10/2013 Staniford et al.
2013/0298243 A1 11/2013 Kumar et al.
2013/0318038 A1 11/2013 Shiffer et al.
2013/0318073 A1 11/2013 Shiffer et al.
2013/0325791 A1 12/2013 Shiffer et al.
2013/0325792 A1 12/2013 Shiffer et al.
2013/0325871 A1 12/2013 Shiffer et al.
2013/0325872 A1 12/2013 Shiffer et al.
2014/0032875 A1 1/2014 Butler
2014/0053260 A1 2/2014 Gupta et al.
2014/0053261 A1 2/2014 Gupta et al.
2014/0130158 A1 5/2014 Wang et al.
2014/0137180 A1 5/2014 Lukacs et al.
2014/0169762 A1 6/2014 Ryu
2014/0179360 A1 6/2014 Jackson et al.
2014/0181131 A1 6/2014 Ross
2014/0189687 A1 7/2014 Jung et al.
2014/0189866 A1 7/2014 Shiffer et al.
2014/0189882 A1 7/2014 Jung et al.
2014/0237600 A1 8/2014 Silberman et al.
2014/0280245 A1 9/2014 Wilson
2014/0283037 A1 9/2014 Sikorski et al.
2014/0283063 A1 9/2014 Thompson et al.
2014/0328204 A1 11/2014 Klotsche et al.
2014/0337836 A1 11/2014 Ismael
2014/0344926 A1 11/2014 Cunningham et al.
2014/0351935 A1 11/2014 Shao et al.
2014/0380473 A1 12/2014 Bu et al.
2014/0380474 A1 12/2014 Paithane et al.
2015/0007312 A1 1/2015 Pidathala et al.
2015/0074770 A1* 3/2015 McBeath G06F 21/606 726/4
2015/0096022 A1 4/2015 Vincent et al.
2015/0096023 A1 4/2015 Mesdaq et al.
2015/0096024 A1 4/2015 Haq et al.
2015/0096025 A1 4/2015 Ismael
2015/0180886 A1 6/2015 Staniford et al.
2015/0186645 A1 7/2015 Aziz et al.
2015/0220735 A1 8/2015 Paithane et al.
2015/0372980 A1 12/2015 Eyada
2016/0028768 A1* 1/2016 Yu H04L 63/145 726/23
2016/0044000 A1 2/2016 Cunningham
2016/0127393 A1 5/2016 Aziz et al.

FOREIGN PATENT DOCUMENTS

WO 0206928 1/2002
WO 02/23805 A2 3/2002
WO 2007117636 A2 10/2007
WO 2008041950 A2 4/2008
WO 2011084431 A2 7/2011
WO 2011/112348 A1 9/2011
WO 2012/075336 A1 6/2012
WO 2012145066 A1 10/2012
WO 2013/067505 A1 5/2013

OTHER PUBLICATIONS

Margolis, P.E. , "Random House Webster's 'Computer & Internet Dictionary 3rd Edition'", ISBN 0375703519, (Dec. 1998).
Moore, D. , et al., "Internet Quarantine: Requirements for Containing Self-Propagating Code", INFOCOM, vol. 3, (Mar. 30-Apr. 3, 2003), pp. 1901-1910.
Morales, Jose A., et al., ""Analyzing and exploiting network behaviors of malware."", Security and Privacy in Communication Networks. Springer Berlin Heidelberg, 2010. 20-34.
Mori, Detecting Unknown Computer Viruses, 2004, Springer-Verlag Berlin Heidelberg.
Natvig, Kurt , "SANDBOXII: Internet", Virus Bulletin Conference, ("Natvig"), (Sep. 2002).
NetBIOS Working Group. Protocol Standard for a NetBIOS Service on a TCP/UDP transport: Concepts and Methods. STD 19, RFC 1001, Mar. 1987.
Newsome, J. , et al., "Dynamic Taint Analysis for Automatic Detection, Analysis, and Signature Generation of Exploits on Commodity Software", In Proceedings of the 12th Annual Network and Distributed System Security, Symposium (NDSS '05), (Feb. 2005).
Newsome, J. , et al., "Polygraph: Automatically Generating Signatures for Polymorphic Worms", In Proceedings of the IEEE Symposium on Security and Privacy, (May 2005).
Nojiri, D., et al., "Cooperation Response Strategies for Large Scale Attack Mitigation", DARPA Information Survivability Conference and Exposition, vol. 1, (Apr. 22-24, 2003), pp. 293-302.
Oberheide et al., CloudAV.sub.-N-Version Antivirus in the Network Cloud, 17th USENIX Security Symposium USENIX Security '08 Jul. 28-Aug. 1, 2008 San Jose, CA.
Reiner Sailer, Enriquillo Valdez, Trent Jaeger, Roonald Perez, Leendert van Doorn, John Linwood Griffin, Stefan Berger., sHype: Secure Hypervisor Appraoch to Trusted Virtualized Systems (Feb. 2, 2005) ("Sailer").
Silicon Defense, "Worm Containment in the Internal Network", (Mar. 2003), pp. 1-25.

(56) **References Cited**

OTHER PUBLICATIONS

Singh, S. , et al., "Automated Worm Fingerprinting", Proceedings of the ACM/USENIX Symposium on Operating System Design and Implementation, San Francisco, California, (Dec. 2004).
Spitzner, Lance , "Honeypots: Tracking Hackers", ("Spizner"), (Sep. 17, 2002).
The Sniffers's Guide to Raw Traffic available at: yuba.stanford.edu/.about.casado/pcap/section1.html, (Jan. 6, 2014).
Thomas H. Ptacek, and Timothy N. Newsham , "Insertion, Evasion, and Denial of Service: Eluding Network Intrusion Detection", Secure Networks, ("Ptacek"), (Jan. 1998).
U.S. Pat. No. 8,171,553 filed Apr. 20, 2006, Inter Parties Review Decision dated Jul. 10, 2015.
U.S. Pat. No. 8,291,499 filed Mar. 16, 2012, Inter Parties Review Decision dated Jul. 10, 2015.
Venezia, Paul , "NetDetector Captures Intrusions", InfoWorld Issue 27, ("Venezia"), (Jul. 14, 2003).
Wahid et al., Characterising the Evolution in Scanning Activity of Suspicious Hosts, Oct. 2009, Third International Conference on Network and System Security, pp. 344-350.
Whyte, et al., "DNS-Based Detection of Scanning Works in an Enterprise Network", Proceedings of the 12th Annual Network and Distributed System Security Symposium, (Feb. 2005), 15 pages.
Williamson, Matthew M., "Throttling Viruses: Restricting Propagation to Defeat Malicious Mobile Code", ACSAC Conference, Las Vegas, NV, USA, (Dec. 2002), pp. 1-9.
Yuhei Kawakoya et al: "Memory behavior-based automatic malware unpacking in stealth debugging environment", Malicious and Unwanted Software (Malware), 2010 5th International Conference on, IEEE, Piscataway, NJ, USA, Oct. 19, 2010, pp. 39-46, XP031833827, ISBN:978-1-4244-8-9353-1.
Zhang et al., The Effects of Threading, Infection Time, and Multiple-Attacker Collaboration on Malware Propagation, Sep. 2009, IEEE 28th International Symposium on Reliable Distributed Systems, pp. 73-82.
"Mining Specification of Malicious Behavior"—Jha et al, UCSB, Sep. 2007 https://www.cs.ucsb.edu/.about.chris/research/doc/esec07.sub.--mining.pdf-.
"Network Security: NetDetector—Network Intrusion Forensic System (NIFS) Whitepaper", ("NetDetector Whitepaper"), (2003).
"Packet", Microsoft Computer Dictionary, Microsoft Press, (Mar. 2002), 1 page.
"When Virtual is Better Than Real", IEEEXplore Digital Library, available at, http://ieeexplore.ieee.org/xpl/articleDetails.isp?reload=true&arnumbe- r=990073, (Dec. 7, 2013).
Abdullah, et al., Visualizing Network Data for Intrusion Detection, 2005 IEEE Workshop on Information Assurance and Security, pp. 100-108.
Adetoye, Adedayo , et al., "Network Intrusion Detection & Response System", ("Adetoye"), (Sep. 2003).
AltaVista Advanced Search Results. "attack vector identifier". Http://www.altavista.com/web/results?Itag=ody&pg=aq &aqmode=aqa=Event+Orch- estrator . . . , (Accessed on Sep. 15, 2009).
AltaVista Advanced Search Results. "Event Orchestrator". Http://www.altavista.com/web/results? Itag=ody&pg=aq &aqmode=aqa=Event+Orch- esrator . . . , (Accessed on Sep. 3, 2009).
Apostolopoulos, George; hassapis, Constantinos; "V-eM: A cluster of Virtual Machines for Robust, Detailed, and High-Performance Network Emulation", 14th IEEE International Symposium on Modeling, Analysis, and Simulation of Computer and Telecommunication Systems, Sep. 11-14, 2006, pp. 117-126.
Aura, Tuomas, "Scanning electronic documents for personally identifiable information", Proceedings of the 5th ACM workshop on Privacy in electronic society. ACM, 2006.
Baecher, "The Nepenthes Platform: An Efficient Approach to collect Malware", Springer-verlag Berlin Heidelberg, (2006), pp. 165-184.
Baldi, Mario; Risso, Fulvio; "A Framework for Rapid Development and Portable Execution of Packet-Handling Applications", 5th IEEE International Symposium Processing and Information Technology, Dec. 21, 2005, pp. 233-238.
Bayer, et al., "Dynamic Analysis of Malicious Code", J Comput Virol, Springer-Verlag, France., (2006), pp. 67-77.
Boubalos, Chris , "extracting syslog data out of raw pcap dumps, seclists.org, Honeypots mailing list archives", available at http://seclists.org/honeypots/2003/q2/319 ("Boubalos"), (Jun. 5, 2003).
Chaudet, C. , et al., "Optimal Positioning of Active and Passive Monitoring Devices", International Conference on Emerging Networking Experiments and Technologies, Proceedings of the 2005 ACM Conference on Emerging Network Experiment and Technology, CoNEXT '05, Toulousse, France, (Oct. 2005), pp. 71-82.
Chen, P. M. and Noble, B. D., "When Virtual is Better Than Real, Department of Electrical Engineering and Computer Science", University of Michigan ("Chen") (2001).
Cisco "Intrusion Prevention for the Cisco ASA 5500-x Series" Data Sheet (2012).
Cisco, Configuring the Catalyst Switched Port Analyzer (SPAN) ("Cisco"), (1992).
Clark, John, Sylvian Leblanc,and Scott Knight. "Risks associated with usb hardware trojan devices used by insiders." Systems Conference (SysCon), 2011 IEEE International. IEEE, 2011.
Cohen, M.I. , "PyFlag—An advanced network forensic framework", Digital investigation 5, Elsevier, (2008), pp. S112-S120.
Costa, M. , et al., "Vigilante: End-to-End Containment of Internet Worms", SOSP '05, Association for Computing Machinery, Inc., Brighton U.K., (Oct. 23-26, 2005).
Crandall, J.R. , et al., "Minos:Control Data Attack Prevention Orthogonal to Memory Model", 37th International Symposium on Microarchitecture, Portland, Oregon, (Dec. 2004).
Deutsch, P. , "Zlib compressed data format specification version 3.3" RFC 1950, (1996).
Distler, "Malware Analysis: An Introduction", SANS Institute InfoSec Reading Room, SANS Institute, (2007).
Dunlap, George W. , et al., "ReVirt: Enabling Intrusion Analysis through Virtual-Machine Logging and Replay", Proceeding of the 5th Symposium on Operating Systems Design and Implementation, USENIX Association, ("Dunlap"), (Dec. 9, 2002).
Excerpt regarding First Printing Date for Merike Kaeo, Designing Network Security ("Kaeo"), (2005).
Filiol, Eric , et al., "Combinatorial Optimisation of Worm Propagation on an Unknown Network", International Journal of Computer Science 2.2 (2007).
FireEye Malware Analysis & Exchange Network, Malware Protection System, FireEye Inc., 2010.
FireEye Malware Analysis, Modern Malware Forensics, FireEye Inc., 2010.
FireEye v.6.0 Security Target, pp. 1-35, Version 1.1, FireEye Inc., May 2011.
Gibler, Clint, et al. AndroidLeaks: automatically detecting potential privacy leaks in android applications on a large scale. Springer Berlin Heidelberg, 2012.
Goel, et al., Reconstructing System State for Intrusion Analysis, Apr. 2008 SIGOPS Operating Systems Review, vol. 42 Issue 3, pp. 21-28.
Gregg Keizer: "Microsoft's HoneyMonkeys Show Patching Windows Works", Aug. 8, 2005, XP055143386, Retrieved from the Internet: URL:http://www.informationweek.com/microsofts-honeymonkeys-show-patching-windows-works/d/d-d/1035069? [retrieved on Jun. 1, 2016].
Heng Yin et al, Panorama: Capturing System-Wide Information Flow for Malware Detection and Analysis, Research Showcase © CMU, Carnegie Mellon University, 2007.
Hjelmvik, Erik , "Passive Network Security Analysis with NetworkMiner", (IN)Secure, Issue 18, (Oct. 2008), pp. 1-100.
Idika et al., A-Survey-of-Malware-Detection-Techniques, Feb. 2, 2007, Department of Computer Science, Purdue University.
IEEE Xplore Digital Library Sear Results for "detection of unknown computer worms". Http//ieeexplore.ieee.org/searchresult.jsp?SortField=Score&SortOrder=desc-&ResultC . . . , (Accessed on Aug. 28, 2009).

(56) **References Cited**

OTHER PUBLICATIONS

Isohara, Takamasa, Keisuke Takemori, and Ayumu Kubota. "Kernel-based behavior analysis for android malware detection." Computational intelligence and Security (CIS), 2011 Seventh International Conference on. IEEE, 2011.

Kaeo, Merike , "Designing Network Security", ("Kaeo"), (Nov. 2003).

Kevin A Roundy et al: "Hybrid Analysis and Control of Malware", Sep. 15, 2010, Recent Advances in Intrusion Detection, Springer Berlin Heidelberg, Berlin, Heidelberg, pp. 317-338, XP019150454 ISBN:978-3-642-15511-6.

Kim, H., et al., "Autograph: Toward Automated, Distributed Worm Signature Detection", Proceedings of the 13th Usenix Security Symposium (Security 2004), San Diego, (Aug. 2004), pp. 271-286.

King, Samuel T., et al., "Operating System Support for Virtual Machines", ("King") (2003).

Krasnyansky, Max , et al., Universal TUN/TAP driver, available at https://www.kemel.org/doc/Documentation/networking/tuntap.txt (2002) ("Krasnyansky").

Kreibich, C. , et al., "Honeycomb-Creating Intrusion Detection Signatures Using Honeypots", 2nd Workshop on Hot Topics in Networks (HotNets-11), Boston, USA, (2003).

Kristoff, J. , "Botnets, Detection and Mitigation: DNS-Based Techniques", NU Security Day, (2005), 23 pages.

Leading Colleges Select FireEye to Stop Malware-Related Data Breaches, FireEye Inc., 2009.

Li et al., A VMM-Based System Call Interposition Framework for Program Monitoring, Dec. 2010, IEEE 16th International Conference on Parallel and Distributed Systems, pp. 706-711.

Liljenstam, Michael , et al., "Simulating Realistic Network Traffic for Worm Warning System Design and Testing", Institute for Security Technology studies, Dartmouth College ("Liljenstam"), (Oct. 27, 2003).

Lindorfer, Martina, Clemens Kolbitsch, and Paolo Milani Comparetti. "Detecting environment-sensitive malware." Recent Advances in Intrusion Detection. Springer Berlin Heidelberg, 2011.

Lok Kwong et al: "DroidScope: Seamlessly Reconstructing the OS and Dalvik Semantic Views for Dynamic Android Malware Analysis", Aug. 10, 2012, XP055158513, Retrieved from the Internet: URL:https://www.usenix.org/system/files/conference/usenixsecurity12/sec12- -final107.pdf [retrieved on Dec. 15, 2014].

* cited by examiner

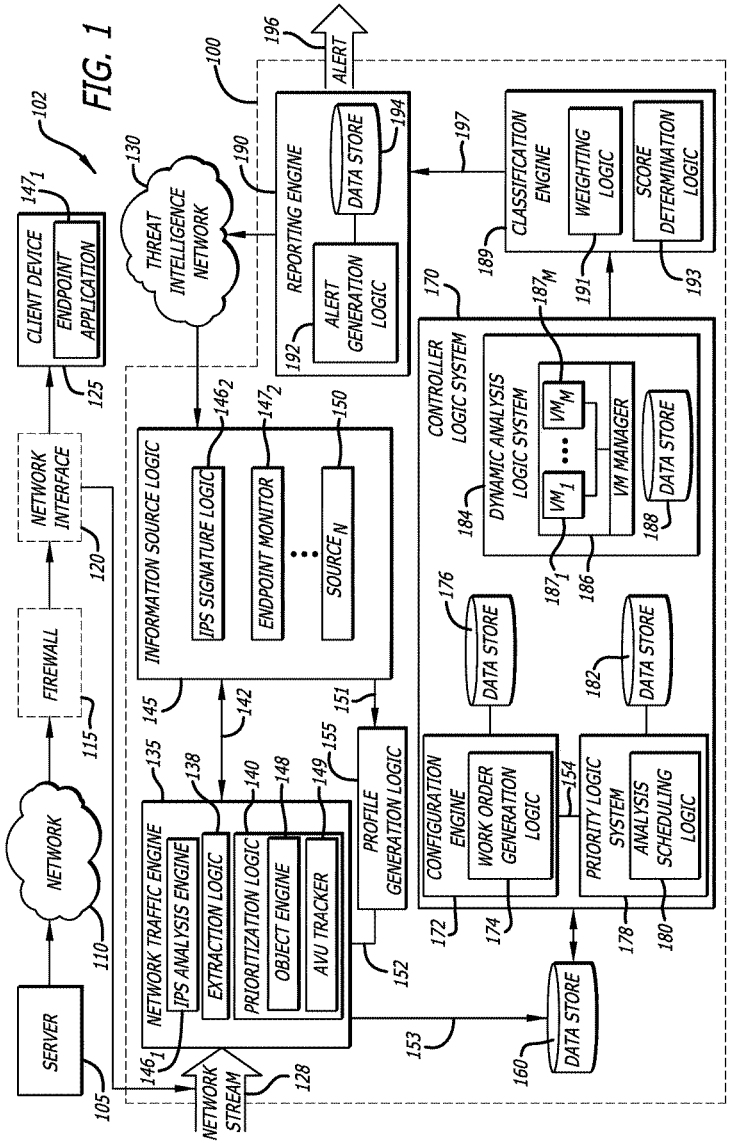
SERVER
105
NETWORK
110
FIREWALL
115
NETWORK INTERFACE
120
CLIENT DEVICE
125
ENDPOINT APPLICATION
147_1
102
NETWORK STREAM
128
146_1
NETWORK TRAFFIC ENGINE
135
IPS ANALYSIS ENGINE
138
EXTRACTION LOGIC
140
PRIORITIZATION LOGIC
148
OBJECT ENGINE
149
AVU TRACKER
155
PROFILE GENERATION LOGIC
152
145
142
INFORMATION SOURCE LOGIC
146_2
IPS SIGNATURE LOGIC
147_2
ENDPOINT MONITOR
150
$SOURCE_N$
151
153
DATA STORE
160
130
THREAT INTELLIGENCE NETWORK
190
100
REPORTING ENGINE
192
ALERT GENERATION LOGIC
194
DATA STORE
196
ALERT
197
CLASSIFICATION ENGINE
189
WEIGHTING LOGIC
191
SCORE DETERMINATION LOGIC
193
170
CONTROLLER LOGIC SYSTEM
DYNAMIC ANALYSIS LOGIC SYSTEM
184
VM_1
VM_M
187_M
187_1
186
VM MANAGER
DATA STORE
188
176
DATA STORE
182
DATA STORE
CONFIGURATION ENGINE
172
WORK ORDER GENERATION LOGIC
174
PRIORITY LOGIC SYSTEM
178
154
ANALYSIS SCHEDULING LOGIC
180

FIG. 1

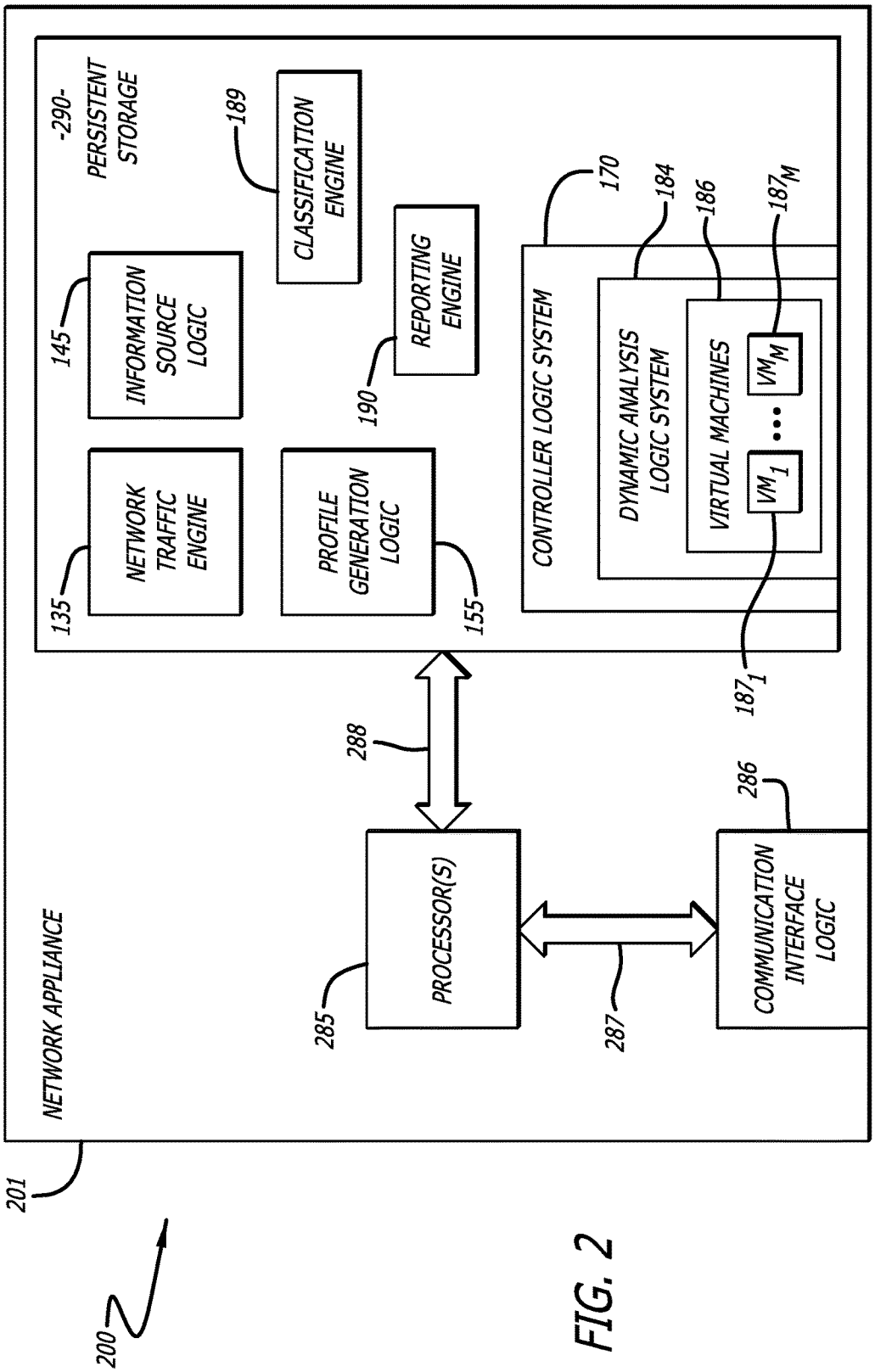
NETWORK APPLIANCE
201
200
-290-
PERSISTENT STORAGE
135
NETWORK TRAFFIC ENGINE
145
INFORMATION SOURCE LOGIC
189
CLASSIFICATION ENGINE
190
REPORTING ENGINE
155
PROFILE GENERATION LOGIC
170
CONTROLLER LOGIC SYSTEM
184
DYNAMIC ANALYSIS LOGIC SYSTEM
186
VIRTUAL MACHINES
VM_1
VM_M
187_1
187_M
288
285
PROCESSOR(S)
287
286
COMMUNICATION INTERFACE LOGIC

FIG. 2

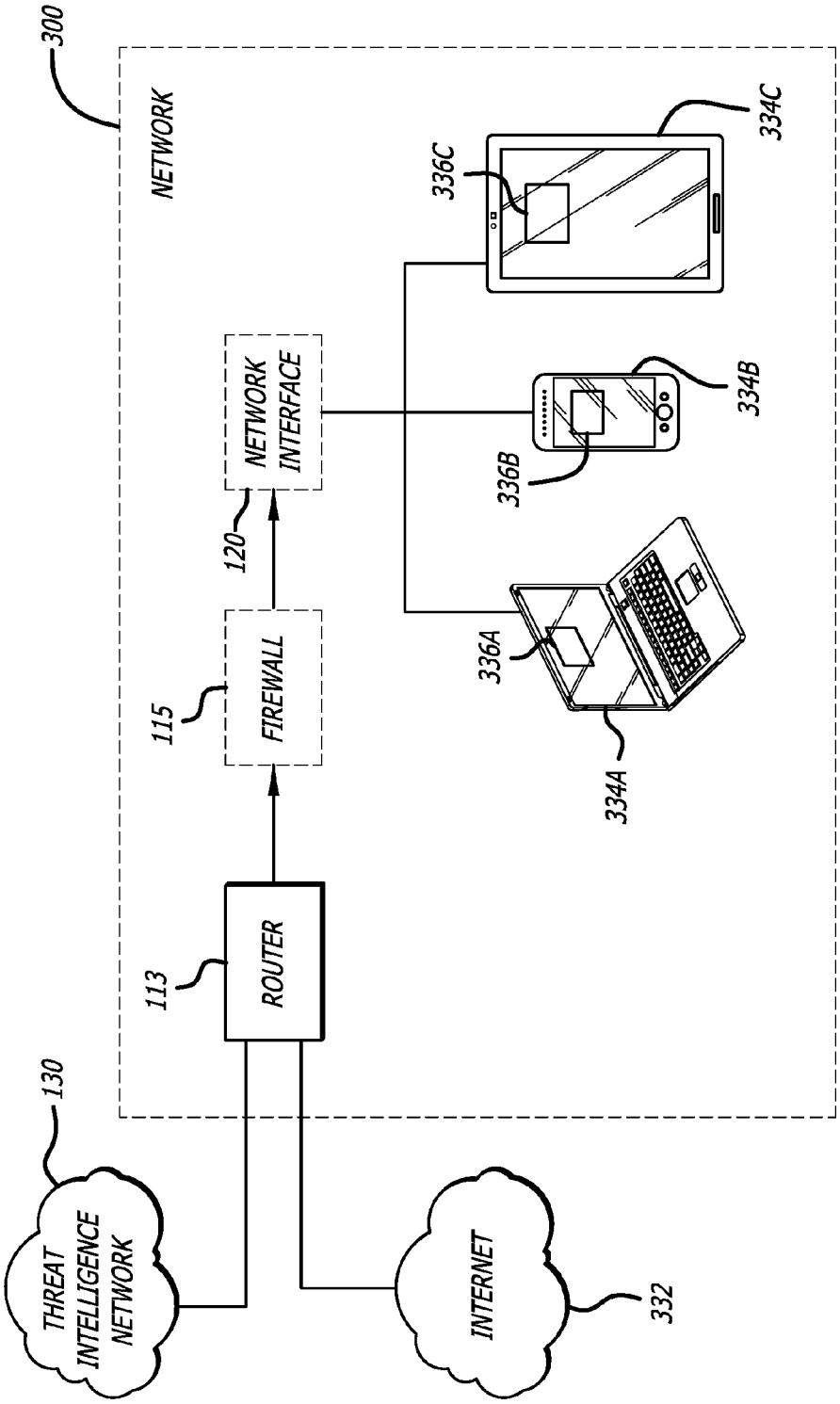
300
NETWORK
113
ROUTER
115
FIREWALL
120
NETWORK INTERFACE
336A
334A
336B
334B
336C
334C
130
THREAT INTELLIGENCE NETWORK
INTERNET
332

FIG. 3

FIG. 4

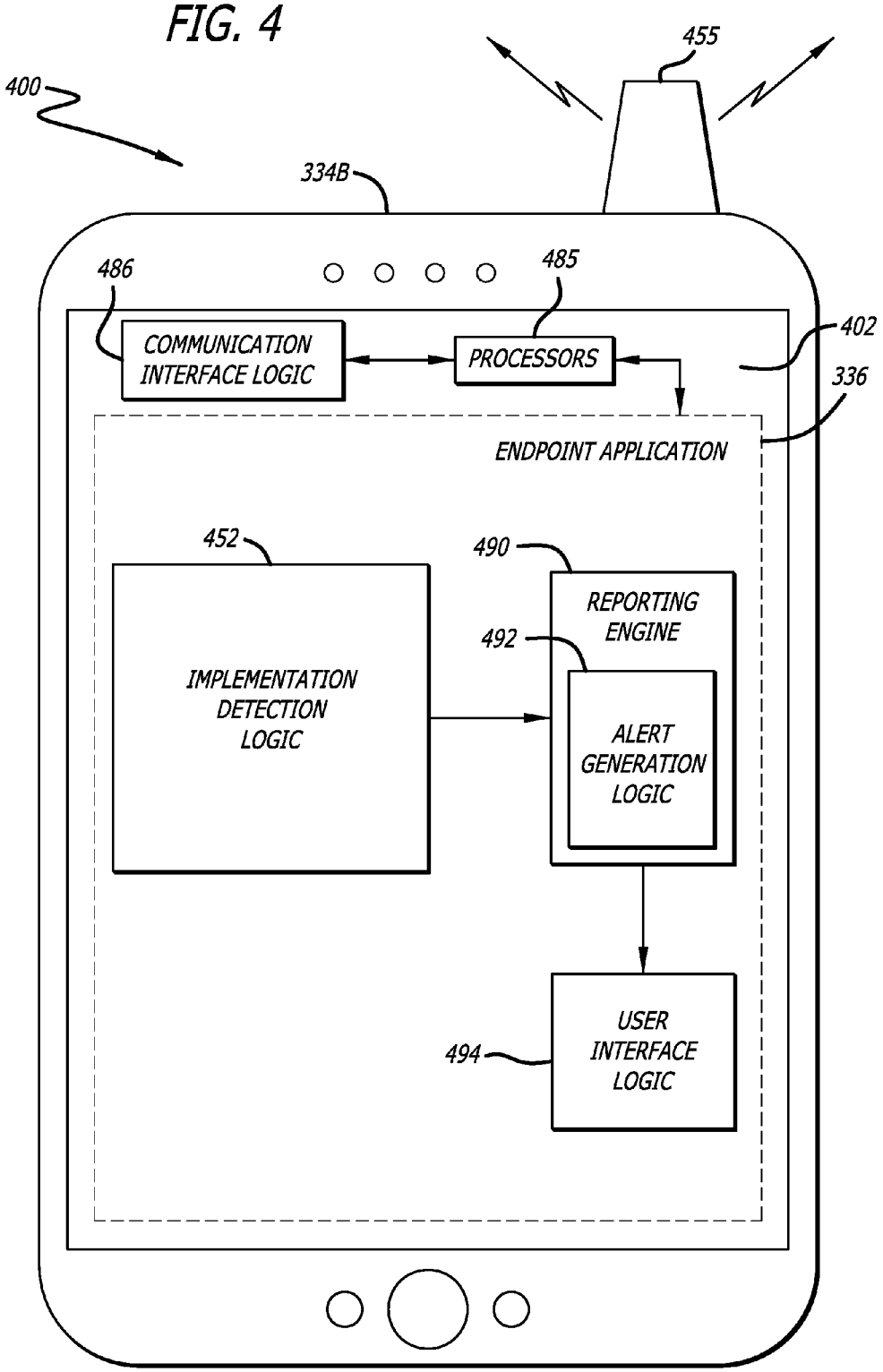
400
455
334B
486
485
COMMUNICATION INTERFACE LOGIC
PROCESSORS
402
336
ENDPOINT APPLICATION
452
490
REPORTING ENGINE
492
IMPLEMENTATION DETECTION LOGIC
ALERT GENERATION LOGIC
USER INTERFACE LOGIC
494

FIG. 5

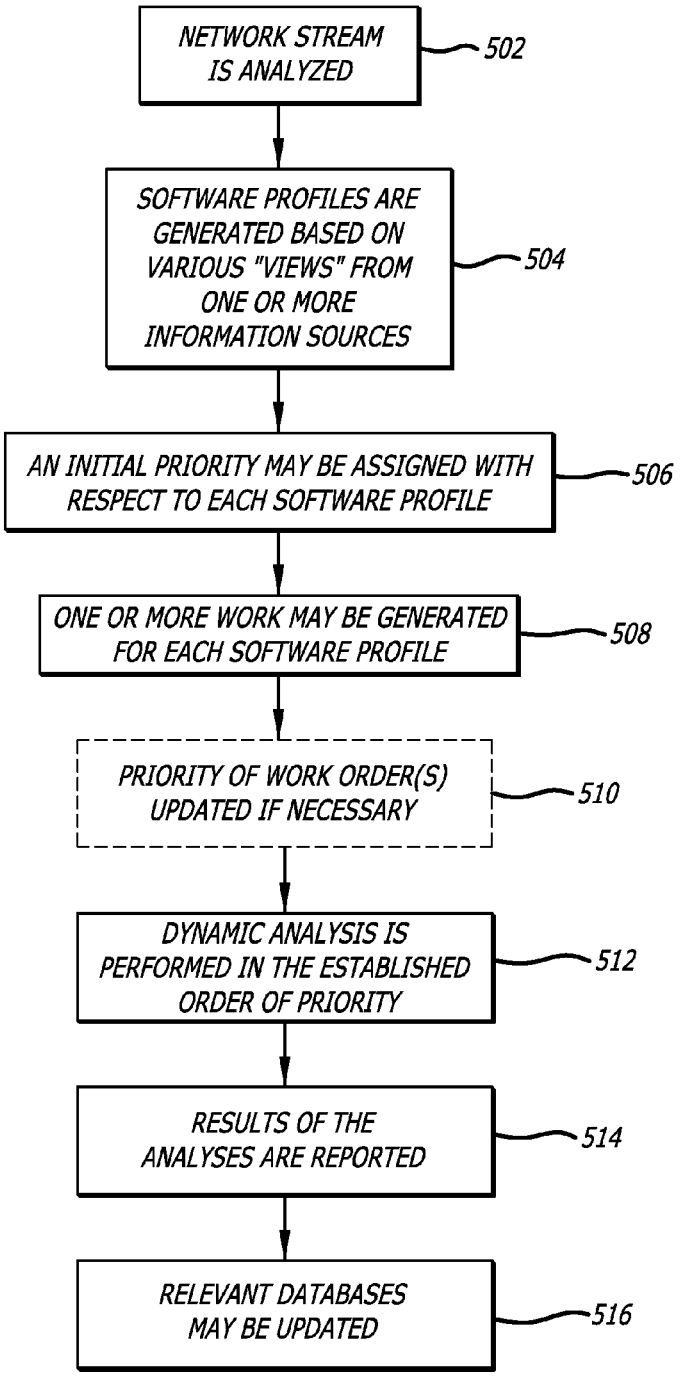
NETWORK STREAM IS ANALYZED
502
SOFTWARE PROFILES ARE GENERATED BASED ON VARIOUS "VIEWS" FROM ONE OR MORE INFORMATION SOURCES
504
AN INITIAL PRIORITY MAY BE ASSIGNED WITH RESPECT TO EACH SOFTWARE PROFILE
506
ONE OR MORE WORK MAY BE GENERATED FOR EACH SOFTWARE PROFILE
508
PRIORITY OF WORK ORDER(S) UPDATED IF NECESSARY
510
DYNAMIC ANALYSIS IS PERFORMED IN THE ESTABLISHED ORDER OF PRIORITY
512
RESULTS OF THE ANALYSES ARE REPORTED
514
RELEVANT DATABASES MAY BE UPDATED
516

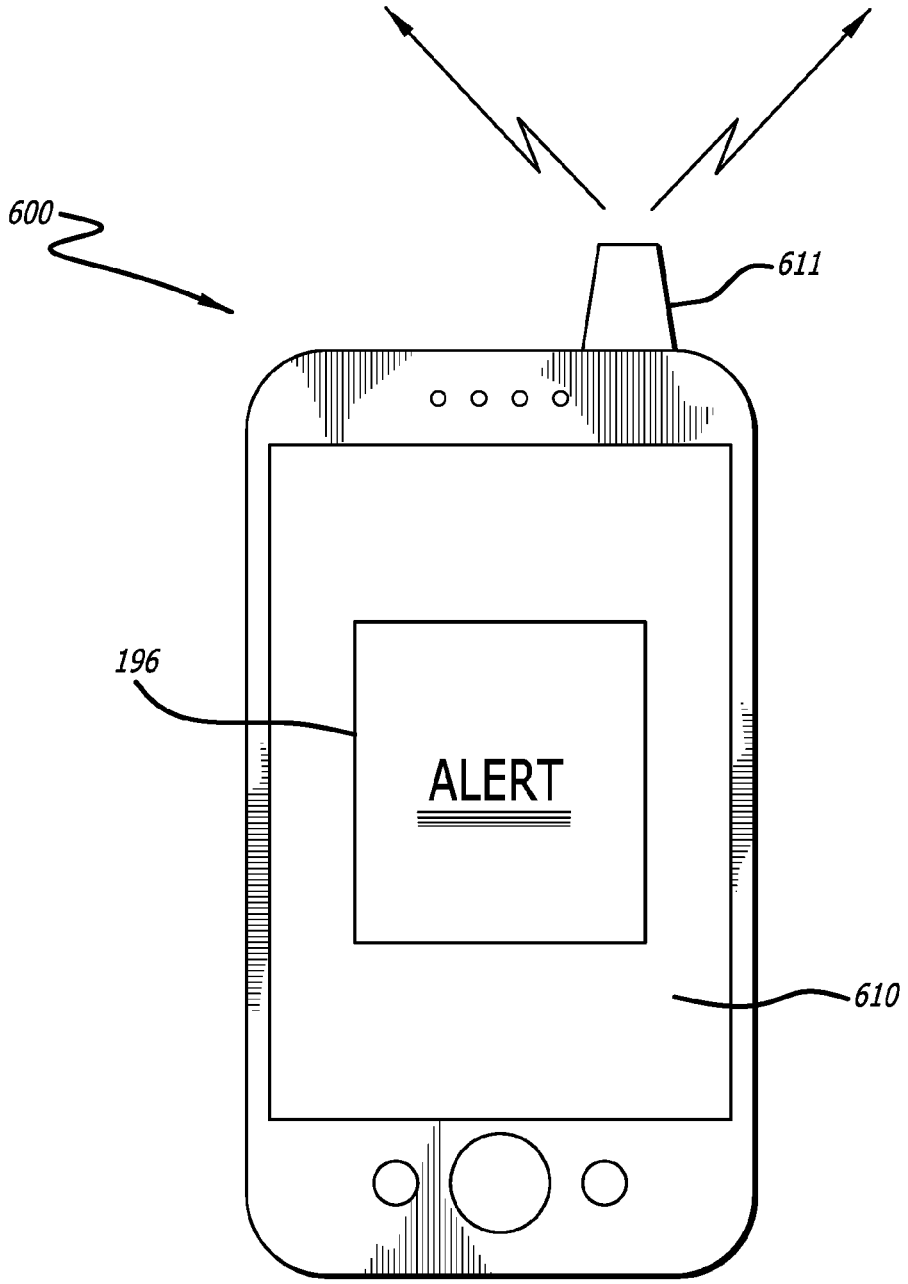

FIG. 6

SUSCEPTIBLE ENVIRONMENT DETECTION SYSTEM

FIELD

Embodiments of the disclosure relate to the field of cyber-security; and more specifically to a system for detecting malware and software environments susceptible to a malicious attack.

GENERAL BACKGROUND

Over the last decade, malicious software has become a pervasive problem for Internet users as many networked resources include vulnerabilities that are subject to attack. For instance, over the past few years, an increasing number of vulnerabilities are being discovered in software that is loaded onto network devices, such as vulnerabilities within operating systems, for example. While some vulnerabilities continue to be addressed through software patches, prior to the release of such software patches, network devices will continue to be targeted for attack by malware, namely information such as computer code that attempts during execution to take advantage of a vulnerability in computer software by acquiring sensitive information or adversely influencing or attacking normal operations of the network device or the entire enterprise network.

Conventionally, malware is configured to activate when it is processed in a generic software environment. However, certain malware may be configured so that malicious behavior is only exhibited when the malware is exposed to a particular software environment. The specific software profiles (e.g., application version, operating system/version, etc.) in which malware is activated—and its behaviors observed during processing—may be referred to as a susceptible software environment.

Unfortunately, conventional malware analysis systems may erroneously output a "false negative" result if the client device, for example, is not operating in the particular software environment(s) that are the target of the malware.

Accordingly, a need exists for an improved malware detection system, apparatus and method that is configured to detect malicious objects by analyzing various "views" with respect to the malicious objects, so as to configure software profiles for use in determining one or more susceptible software environments.

BRIEF DESCRIPTION OF THE DRAWINGS

Embodiments of the invention are illustrated by way of example and not by way of limitation in the figures of the accompanying drawings, in which like references indicate similar elements and in which:

FIG. **1** is an exemplary block diagram of a communication system deploying a susceptible environment detection system via a network.

FIG. **2** is an exemplary embodiment of a logical representation of the Susceptible Environment Detection system of FIG. **1**.

FIG. **3** is an exemplary representation of a plurality of mobile devices deploying an endpoint application communicatively coupled to a network.

FIG. **4** is an exemplary embodiment of a mobile device deploying an endpoint application according to the present disclosure.

FIG. **5** is a flowchart of an exemplary method for configuring a dynamic analysis system using a plurality of information sources to determine a susceptible software environment.

FIG. **6** is an exemplary network device demonstrating an alert according to the present disclosure.

DETAILED DESCRIPTION

Embodiments of the present disclosure generally relate to a Susceptible Environment Detection ("SED") system that is configured to utilize context information obtained from multiple information sources (especially, for example, a client device) to generate one or more software profiles to provision one or more virtual machines of a dynamic analysis logic system. In one embodiment, dynamic analysis is scheduled based on priority values that are assigned to the one or more software profiles. The dynamic analysis logic system may be configured to analyze characteristics and/or behaviors of a malicious object and, preferably, determine one or more susceptible software environments. By determining one or more susceptible software environments, the incidence of "false negative" results is reduced.

A. Analyzing an Object Using a Plurality of Information Sources

In general, context information is received and aggregated from any of various information sources to generate one or more software profiles that may be analyzed to determine one or more susceptible software environment.

Indeed, various "views" of a malicious object may be gathered, by way of non-limiting example, using information sources from the network level, application level, etc., without limitation. For example, a network traffic engine may be configured as an information source to extract suspicious objects from network traffic and prioritize further analyses as desired. Similarly, an executable application loaded (e.g., an agent) on a client device may be used to gather specific configuration information details thereto. In one embodiment, the configuration information may include various software profile information, and other device-specific information, such as, for example, the IP address of a client device, domain name(s), username(s), and computer name(s), without limitation.

Moreover, an object engine may be configured to observe and/or extract characteristics of a suspicious object and compare such observed characteristics with those stored on one or more cyber-security databases, such as, for example, a Common Vulnerabilities and Exposures (CVEs) database. Various other sources may be used to gather context information as described herein, without limitation.

In any event, once the various "views" are received and analyzed, various software profiles may be generated using the aggregated context information. In one embodiment, the software profiles may be used as templates that are representative of various combinations, versions, and/or implementations of various software environments, including by way of non-limiting example, various combinations of applications, operating systems, and/or plug-ins.

B. Establishing a Priority Order to Schedule Dynamic Analyses

In embodiments, the generated software profiles may be assigned initial priority values. For example, an initial priority value may be associated with each software profile, which may be used to schedule various analyses using the dynamic analysis logic system. The initial priority values may be representative of rules that have been established/

determined by customers, and/or updated from a central management system, such as a threat intelligence network.

In one embodiment, a configuration engine generates "work orders" based on the one or more software profiles to provision one or more virtual machines of the dynamic analysis logic system. Once the work orders have been generated, analysis scheduling logic may be configured to schedule each of the work orders for analysis, based on the initial priority values. The analysis scheduling logic may update the initial priority values contingent upon system capacity; customer-defined rules (e.g. if only one system is affected by the attack, the priority may be reduced; alternatively, if a high-profile personality is the target of an attack, such as the CEO, the priority may be increased); scheduling rules provided from a remote management console; and the like, without limitation.

Once the final priorities have been established, various characteristics and/or behaviors of the object may be determined. For example, the dynamic analysis logic system may be configured to determine i) maliciousness with respect to the object; and/or, preferably, ii) one or more susceptible environments. If either of the forgoing is determined, an alert is generated.

The alert may signal any of various malware attack types, including without limitation, phishing campaigns, Advanced Persistent Threats (APT), Point-Of-Sales attacks (POS), Crimeware attacks, and the like. Similarly, the alert may feature information regarding the susceptible environments, including, for example, version information with respect to any of various applications, operating systems, and/or plug-ins. In one embodiment, the alert may be used to update one or more client devices or any other aspects of various susceptible environments in real time, based at least in part on the results of the analyses as discussed herein.

I. Terminology

In the following description, certain terminology is used to describe features of the invention.

In certain situations, both terms "logic," "engine" and "component" are representative of hardware, firmware and/or software that is configured to perform one or more functions. As hardware, logic (or engine or component) may include circuitry having data processing or storage functionality. Examples of such circuitry may include, but are not limited or restricted to a microprocessor, one or more processor cores, a programmable gate array, a microcontroller, an application specific integrated circuit, wireless receiver, transmitter and/or transceiver circuitry, semiconductor memory, or combinatorial logic.

Logic (or engine or component) may be software in the form of one or more software modules, such as executable code in the form of an executable application, an application programming interface (API), a subroutine, a function, a procedure, an applet, a servlet, a routine, source code, object code, a shared library/dynamic load library, or one or more instructions. These software modules may be stored in any type of a suitable non-transitory storage medium, or transitory storage medium (e.g., electrical, optical, acoustical or other form of propagated signals such as carrier waves, infrared signals, or digital signals). Examples of non-transitory storage medium may include, but are not limited or restricted to a programmable circuit; a semiconductor memory; non-persistent storage such as volatile memory (e.g., any type of random access memory "RAM"); persistent storage such as non-volatile memory (e.g., read-only memory "ROM", power-backed RAM, flash memory, phase-change memory, etc.), a solid-state drive, hard disk drive, an optical disc drive, or a portable memory device. As firmware, the executable code is stored in persistent storage.

The term "object" generally refers to a collection of data, whether in transit (e.g., over a network) or at rest (e.g., stored), often having a logical structure or organization that enables it to be classified for purposes of analysis. During analysis, for example, the object may exhibit a set of expected characteristics and, during processing, a set of expected behaviors. The object may also exhibit a set of unexpected characteristics and a set of unexpected behaviors that may evidence the presence of malware and potentially allow the object to be classified as malware.

Examples of objects may include one or more flows or a self-contained element within a flow itself. A "flow" generally refers to related packets that are received, transmitted, or exchanged within a communication session. For convenience, a packet is broadly referred to as a series of bits or bytes having a prescribed format, which may include packets, frames, or cells.

As an illustrative example, an object may include a set of flows such as (1) a sequence of transmissions in accordance with a particular communication protocol (e.g., User Datagram Protocol (UDP); Transmission Control Protocol (TCP); or Hypertext Transfer Protocol (HTTP); or Simple Mail Transfer Protocol (SMTP); or Internet Message Access Protocol (IMAP); or Post Office Protocol (POP)), or (2) inter-process communications (e.g., Remote Procedure Call "RPC" or analogous processes, etc.). Moreover, the object may be featured with a message as an attachment, for example.

Similarly, as another illustrative example, the object may be a self-contained element, where different types of such objects may include an executable file, non-executable file (such as a document or a dynamically link library), a Portable Document Format (PDF) file, a JavaScript file, Zip file, a Flash file, a document (for example, a Microsoft Office® document), an electronic mail (email), downloaded web page, an instant messaging element in accordance with Session Initiation Protocol (SIP) or another messaging protocol, or the like. Finally, "object" may also refer to any of various files, including, but not limited to executable programs (file types: .com, .exe, .vbs, .zip, .scr, .dll, .pif, .js), macros (file types: .doc, .dot, .pdf, .ppt, .xls, .xlt), embedded scripts, Hypertext Markup Language (HTML), Uniform Resource Locators (URLs), and the like.

According to one embodiment, the term "malware" may be construed broadly as any code or activity that initiates a malicious attack and/or operations associated with anomalous or unwanted behavior. For instance, malware may correspond to a type of malicious computer code that executes an exploit to take advantage of a vulnerability, for example, to harm or co-opt operation of a network device or misappropriate, modify or delete data. In the alternative, malware may correspond to an exploit, namely information (e.g., executable code, data, command(s), etc.) that attempts to take advantage of a vulnerability in software and/or an action by a person gaining unauthorized access to one or more areas of a network device to cause the network device to experience undesirable or anomalous behaviors. The undesirable or anomalous behaviors may include a communication-based anomaly or an execution-based anomaly, which, for example, could (1) alter the functionality of an network device executing application software in an atypical manner (a file is opened by a first process where the file is configured to be opened by a second process and not the first process); (2) alter the functionality of the network device

executing that application software without any malicious intent; and/or (3) provide unwanted functionality which may be generally acceptable in another context. Additionally, malware may be code that initiates unwanted behavior which may be, as one example, uploading a contact list from an endpoint device to cloud storage without receiving permission from the user.

In certain instances, the term "detected" is used herein to represent that there is a prescribed level of confidence (or probability) on the presence of malware or a malicious attack on an object under analysis.

The term "network device" should be construed as any electronic device with the capability of connecting to a network. Such a network may be a public network such as the Internet or a private network such as a wireless data telecommunication network, wide area network, a type of local area network (LAN), or a combination of networks. Examples of a network device may include, but are not limited or restricted to, a laptop, a mobile phone, a tablet, a computer, etc.

The term "computerized" generally represents that any corresponding operations are conducted by hardware in combination with software and/or firmware. Also, the terms "compare" or "comparison" generally mean determining if a match (e.g., a certain level of correlation) is achieved between two items where one of the items may include a particular signature pattern.

Finally, the terms "or" and "and/or" as used herein are to be interpreted as inclusive or meaning any one or any combination. Therefore, "A, B or C" or "A, B and/or C" mean "any of the following: A; B; C; A and B; A and C; B and C; A, B and C." An exception to this definition will occur only when a combination of elements, functions, steps or acts are in some way inherently mutually exclusive.

As this invention is susceptible to embodiments of many different forms, it is intended that the present disclosure is to be considered as an example of the principles of the invention and not intended to limit the invention to the specific embodiments shown and described.

II. Susceptible Environment Detection Methodology

A. General Architecture of a Network Device Deploying Susceptible Environment Detection Logic

According to the embodiment illustrated in FIG. **1**, the SED system **100** is a network device that is adapted to analyze information associated with network traffic routed over a communication network **110** between at least one server device **105** and at least one client device **125**. The communication network **110** may include a public network such as the Internet, in which case an optional firewall **115** (represented by dashed lines) may be interposed on the communication path between the public network and the client device **125**. Alternatively, the communication network **110** may be a private network such as a wireless data telecommunication network, wide area network, a type of local area network (LAN), or a combination of networks.

As shown, the SED system **100** may be communicatively coupled with the communication network **110** via a network interface **120**. In general, the network interface **120** operates as a data capturing device (sometimes referred to as a "tap" or "network tap") that is configured to receive data propagating to/from the client device **125** and provide at least some of this data to the SED system **100**. Alternatively, the SED system **100** may be positioned behind the firewall **115** and in-line with client device **125**.

According to one embodiment of the disclosure, the network interface **120** is capable of receiving and routing objects associated with network traffic to the SED system **100**. The network interface **120** may provide the entire traffic or a certain subset of the network traffic, for example, such as one or more files that are part of a set of flows, packet payloads, or the like. In some embodiments, although not shown, network interface **120** may be contained within the SED system **100**.

As further shown in FIG. **1**, the SED system **100** comprises network traffic engine **135**, information source logic **145**, profile generation logic **155**, controller logic system **170**, and reporting engine **190**. Although the components disposed within the SED system **100** are shown in a communicatively coupled serial configuration, it is envisioned that other topologies may also be implemented, such as, for example, parallel and daisy-chain configurations. It should be appreciated that the network traffic engine **135**, information source logic **145**, profile generation logic **155**, controller logic system **170**, classification engine **189** and reporting engine **190** may each be separate and distinct components, but the combination of components may also be implemented in a single block and/or core.

Moreover, it should be understood that the system may feature one or more software modules executed by the same processor or different processors, where these different processors may be located within the same processor package (e.g., different processor cores) and/or located at remote or even geographically remote locations that are communicatively coupled (e.g., by a dedicated communication link) or a network.

As best shown in FIG. **1**, the network traffic engine **135** may be positioned and configured to analyze a network stream **128**, including various network traffic, and especially Internet and electronic mail message traffic, so that suspicious objects may be extracted using extraction logic **138**, and prioritized for further analysis using prioritization logic **140**. In other words, in one embodiment, the network traffic engine **135** features software modules that, when executed by one or more processors, receives one or more object(s) for extraction, and prioritized analysis.

As shown, the extraction logic **138** is configured to extract and/or parse potentially malicious objects from network stream **128** for further analysis, using for example, extraction rules based on machine learning and/or experiential knowledge, which may be periodically or a periodically updated from a remote source (e.g., threat intelligence network **130**). In one embodiment, the extraction logic **138** may be configured to determine the source of one or more malicious objects, and also whether such objects were communicated via email, file-share, FTP, web download, and the like, without limitation. In one embodiment, however, suspicious objects may be communicated directly to the network traffic engine **135** for further analysis, such that no extraction is required at and/or by the network traffic engine **135**.

Moreover, the network traffic engine **135** may feature certain prioritization logic **140**, so as to prioritize the extracted, suspicious objects for further analysis, if, for example, certain context information is deemed to be present, such as if certain types of file extensions (e.g., .JS, .SCR, .PDF, and the like) are utilized and/or otherwise attached. In one embodiment, certain scores may be associated with any of various characteristics with respect to the object. Thus, priorities may be determined using the association and comparison of one or more scores. In one embodiment, the prioritization logic may utilize any of various heuristics,

probability logic, and/or machine-learning so as to assign priorities to the suspicious objects for further analysis.

To gather context information **151** that is used to generate one or more software profiles **152**, various "views" with respect to the potentially malicious object may be analyzed by one or more modules featured in the prioritization logic **140**, which in one embodiment may include an object engine **148**, and/or an application version update (AVU) tracker **149**. In one embodiment, the prioritization logic **140** may also include one or more modules configured to perform a static analysis with respect to the potentially malicious object, so as to identify characteristics and/or anomalous features that may be indicative of maliciousness, without executing the object. For the purposes of convenience, this type of analysis is referred to herein as an IPS analysis, and may be performed, in one embodiment, using an intrusion prevention system ("IPS") analysis engine $\mathbf{146}_1$. As such, the IPS analysis engine $\mathbf{146}_1$ may conduct heuristics, malware signature checks and/or vulnerability signature checks with regard to some and/or all objects to identify "suspicious" objects having one or more characteristics associated with an exploit. From an implementation standpoint, objects may be analyzed using one or more software modules that feature, in one embodiment, probabilistic logic, heuristic logic, and/or deterministic logic.

More specifically, as shown in FIG. **1**, the IPS analysis engine $\mathbf{146}_1$ may be configured so as to analyze specific aspects of the network stream **128** for information, including by way of non-limiting example, source IP address information, destination IP address information, source/destination port information and/or the host name so as to generate an alert.

Moreover, the IPS analysis engine $\mathbf{146}_1$ may be configured to examine the network stream **128** for known malware and/or vulnerability exploits. It is envisioned that using the IPS analysis engine $\mathbf{146}_1$, signature-based detection may be used; that is, detection may be based upon identifiable, and/or previously identified signatures/patterns with respect to various malware. In one embodiment, various signatures may be stored on a data store, such as the data store **160**. Additionally or in the alternative, the IPS analysis engine $\mathbf{146}_1$ may analyze the network stream **128** by performing one or more checks, including one or more signature checks, which may involve a comparison of (i) content of the network stream **128** and (ii) one or more pre-stored signatures associated with detected malware. Checks may also include an analysis to detect exploitation techniques, such as any malicious obfuscation, using for example, probabilistic, heuristic, and/or machine-learning algorithms.

Accordingly, by way of example, the IPS analysis engine $\mathbf{146}_1$ may be adapted to perform vulnerability signature checks, namely a process of uncovering deviations in messaging practices set forth in applicable communication protocols (e.g., HTTP, TCP, etc.). The term "signature" designates an indicator of a set of characteristics and/or behaviors associated with malware which may not necessarily be unique to the malware, as benign objects may also exhibit such characteristics and/or behaviors. Thus, a match of the signature may indicate to some level of probability, often well less than 100%, that the network stream **128** contains a certain malware. In some contexts, those of skill in the art have used the term "signature" as a unique identifier or "fingerprint," for example, of a specific virus or virus family (or other exploit), which is generated for instance as a hash of its machine code, and that is a special sub-case for purposes of this disclosure.

Additionally, or in the alternative, the alert generated by the IPS analysis engine $\mathbf{146}_1$ may be communicated to the IPS signature logic $\mathbf{146}_2$ to determine, with respect to a specific IP address, meta information associated with the alert, including, for example, one or more identifiers associated with Common Vulnerabilities and Exposures (CVEs)—that is, one or more identifiers for publicly known cyber security vulnerabilities; and information regarding target application versions and other software information without limitation. Thus, in one embodiment, the IPS signature logic $\mathbf{146}_2$ may be communicatively coupled to one or more cyber-security databases, such as, for example, a CVE database. It should be understood that any other cyber-security databases may also be used and/or otherwise accessed, without limitation.

In embodiments, the IPS signature logic $\mathbf{146}_2$ may be configured to access one or more modules capable of performing real-time traffic analysis, packet logging and/or performing any one of various protocol analyses, content searching/matching, so as to also determine any of various malware attack types, without limitation. It should be understood that even though the IPS analysis engine $\mathbf{146}_1$ is shown within the network traffic engine **135**, the IPS analysis engine $\mathbf{146}_1$ may also be implemented separately and/or remotely from the SED system **100**. As such, the generated results of one or more various IPS analyses may be supplied and/or otherwise communicated to the SED system **100**, such that the IPS analysis engine $\mathbf{146}_1$ is configured at least in part as a receiver with respect to the receipt of such results.

Thus, in one embodiment, metadata associated with the alert may directly influence the generation of one or more software profiles for further analysis using the dynamic analysis logic system **184**, as discussed further herein. It should be noted, however, that IPS alerts are conventionally associated with a high rate of "false positive" results. However, as discussed herein, software profiles may be generated based on configuration details that are determined directly from the client device **125**, in conjunction with the IPS alert, so as to reduce the incidence of such "false positives." In other words, the SED system **100** may analyze a sample tuple—that is one or more Internet Protocol connection data sets—and generate an alert using the IPS analysis engine $\mathbf{146}_1$. The CVEs mentioned in the alert may be used, at least in part, to generate software profiles that are used to provision one or more virtual machines of the dynamic analysis logic system **184**. Similarly, the software profiles determined and based, at least in part on the client device **125** may be used to provision one or more virtual machines of the using the dynamic analysis logic system **184**. Using these generated software profiles alone or in combination, the IPS alert is significantly more verified, and thereby, the probability of generating a "false positive" result is dramatically reduced. Consequently, it is envisioned that IT administrators and the like can prioritize mitigation steps after the generation of one or more alerts, as discussed herein.

In one embodiment, the object engine **148** may be configured to inspect the object for anomalies in characteristics such as formatting, styles and patterns associated with known malware campaigns and the like. In some embodiments, the object engine **148** may also be configured to analyze the object, wherein such analyses may include, but are not limited or restricted to, analysis of one or more characteristics (hereinafter "characteristic(s)") of or otherwise associated with the object, such as the object's name, object type, size, path, protocols, and/or the like.

Additionally or in the alternative, the object engine **148** may analyze the object by comparing such observed features with those described by CVEs. When matched, a CVE entry may indicate a software profile or components of a software profile that may be susceptible to an exploit. It is contemplated that a CVE entry may only provide information regarding a specific application version that is susceptible to an exploit. As such, a controller logic system **170** (as discussed further herein) may need to combine the application version information with information learned from one or more alternative sources. For example, a second information source may reveal multiple operating system versions that would allow for the generation of one or more software profiles for further analysis. Thus, it should be appreciated that as discussed through various embodiments of the disclosure, information determined from one source may be combined with another source without limitation.

In one embodiment, an object may be analyzed using the object engine **148** so as to determine if one or more "version checks" are performed by the object in an effort to exploit various version-specific vulnerabilities with respect to a system. It should be understood that various malware may be highly customized, and therefore, particular to a specific application and version, for example. More specifically, certain malware may be configured to check a client device to determine which versions of various software are installed thereon, using any of various techniques. Indeed, in one embodiment, only after such version information is detected and corresponding vulnerabilities thereby deduced will one or more malware attacks commence. Thus, it is envisioned that various characteristics with respect to the object may be analyzed to determine if any "version checks" are performed.

Additionally, or in the alternative, the object engine **148** may be configured to determine application version dependencies with respect to the object by extracting corresponding characteristics thereto, or in view of one or more information sources as discussed herein. For example, in one embodiment, the object engine **148** may include one or more emulation logic systems (not shown, as part of a static analysis logic system, for example), that may be configured to observe characteristics of the object and compare such characteristics with various CVEs. Similarly, in one embodiment, the object engine **148** may include one or more dynamic analysis logic systems (not shown in this figure) so as to observe various behaviors exhibited during execution of an object, including, for example, whether the object performs any "version checks" prior to commencing an attack.

Similarly, context information may be gathered using an AVU tracker **149**, which may be configured to inspect network traffic specifically for version update information, such as the version number of any update, and the corresponding date of release and/or the most recent date of the last update. For example, in one embodiment, the AVU tracker **149** may determine that an "HTTP GET" request is being communicated from a specific client device to an external server and/or a particular IP address so that one or more software updates may be downloaded. Such network traffic may be highly instructive with respect to current and/or future application version information for software to be run on the requesting client device, for example.

Moreover, updates with regard to various patches and/or service packs may be tracked without limitation. In one embodiment, such network traffic inspection may require the analysis of any of various header or payload parameters and the corresponding storage of such information on a data store, for example. Thus, in one embodiment, software update information may be extracted from the network stream **128** using certain extraction rules, based on experiential knowledge, machine-learning, or the like. Moreover, the extraction rules may be periodically or aperiodically updated from a remote source (e.g., threat intelligence network **130**). It should be appreciated that by keeping track of updated and/or current versions of various software applications, the analyses as discussed herein may be more accurate and processed more efficiently, thereby desirably reducing analysis times. More specifically, using the results of the AVU tracker **128**, a client's specific software environment may be more accurately simulated and analyzed.

Referring still to FIG. **1**, in one embodiment, the network traffic engine **135** may be configured to determine whether an extracted object is suspicious, and thus worthy of further analysis. If the object does not appear to be suspicious, then the analysis may stop. However, if the object appears to be suspicious, then further context information with regard to the object may be determined using a plurality of other information sources, which are represented in FIG. **1** as information source logic **145**. In other words, various other "views" may be analyzed with respect to the object. Accordingly, in one embodiment, metadata **142** associated with the suspicious object is communicated to the information source logic **145**, so that further contextual information may be determined. Preferably, the metadata **142** may be stored on a data store until or while modules of the information source logic **145** have completed their respective analyses. Similarly, the object and its corresponding metadata **142** may be stored on a data store. It should be appreciated, however, that the various "views" and/or analyses as discussed herein may be considered with regard to one another, in a parallel, serial, and/or recursive fashion, without limitation. In any event, additional context information may be determined using modules of the information source logic **145**, which may feature, by way of non-limiting example, the IPS Signature Logic $\mathbf{146}_2$, and an endpoint monitor $\mathbf{147}_2$, which may be communicatively coupled with an endpoint application $\mathbf{147}_1$.

It is contemplated that any number of other relevant source(s)$_N$ **150** may also be included and considered to determine additional context information, without limitation. For example, in one embodiment, functionality (such as, for example, an interactive display or other user device(s)) may be provided to one or more network administrators so that current application version information and/or any other configuration/implementation information with regard to a computing environment may be input directly and stored on one or more data stores. Assuming that such information is updated on a relatively periodic or aperiodic basis, the accuracy of the system may be greatly improved. Moreover, contextual information may be gathered from a plurality of sources at each layer of the Open Systems Interconnection model (OSI model), including by way of non-limiting example, at the application layer, presentation layer, session layer, transport layer, network layer, data link layer and/or the physical layer.

Moreover, in one embodiment, the information source logic **145** may feature an endpoint monitor $\mathbf{147}_2$ that may be configured so as to receive configuration information, such as various details regarding software loaded on the client device **125**, from an endpoint application $\mathbf{147}_1$, as shown in FIG. **1** for example. In one embodiment, the software loaded on the client device **125** comprises any of various applications, operating systems, and plug-ins. In one embodiment, the endpoint application $\mathbf{147}_1$ may include a communication

link to the information source logic **145**, using one or more communication APIs, for example. Thus, bidirectional or unidirectional access may be provided between the endpoint application $\mathbf{147}_1$ and the endpoint monitor $\mathbf{147}_2$ using any of various cloud services. Moreover, in one embodiment, the endpoint monitor $\mathbf{147}_2$ may be configured as a data store, such that the software profile information with respect to the client device **125** may be automatically stored thereon on a periodic or aperiodic basis, via a content management system (not shown), or any other various cloud services. In embodiments, the content management system may gather such information asynchronously from client devices. Additionally, or in the alternative, a network **110** may feature certain rules such that every time a new client device **125** is registered or otherwise accesses the network, the implementation details of the client device **125** may be stored or monitored using the endpoint monitor $\mathbf{147}_2$, in some embodiments, using the content management system as an intermediary.

To be sure, various software profile information regarding specific applications, operating systems and/or plug-ins loaded on the client device **125** may be monitored by the endpoint application $\mathbf{147}_1$ and stored on a separate data store for later access by any of the modules of the SED system **100**, and especially the endpoint monitor $\mathbf{147}_2$. In one embodiment, the endpoint application $\mathbf{147}_1$ may feature other antivirus detection and prevention aspects. In one embodiment, the endpoint monitor $\mathbf{147}_2$ may be configured for access through an intermediate node of a network (e.g., a management console and the like, without limitation).

Moreover, in one embodiment, other information sources may be able to communicate with the endpoint monitor $\mathbf{147}_2$ so as to access and/or otherwise retrieve configuration details from the client device **125**. By way of illustrative example, the AVU tracker **149** may be configured to communicate with the endpoint monitor $\mathbf{147}_2$ so that configuration details with respect to the client device **125** may be determined and/or stored on one or more data stores.

Similarly, in one embodiment, messages (such as electronic mail messages, SMS, etc.) from the network stream **128** may be of particular interest, and especially messages that include an attachment or otherwise embedded content, such as, by way of non-limiting example, executable and/or non-executable files, URLs, scripts, and the like. By way of illustrative example, electronic mail messages may be analyzed so as to determine various aspects of a client environment, and especially configuration information associated with one or more electronic mail message recipients ("recipient(s)"). In one embodiment, the configuration information includes various details regarding software loaded on the client device **125**, such as any of various applications (e.g., an electronic mailing application), operating systems, and plug-ins.

In one embodiment, the electronic mail message may be examined using one or more modules from the network traffic engine **135** to extract one or more recipient identifiers, including for example, the email address of the recipient, or any other meta information that would be instructive with regard to determining software details of the recipient. In an enterprise environment, for example, the recipient identifiers may include an email address and/or user ID of the recipient that may be used to determine configuration information associated with one or more recipients' device(s), which may be stored on a data store, or otherwise accessed using any of various utilities. Also, the recipient identifiers may be used to check a data store maintained by the enterprise (e.g., its IT function) to obtain configuration information corresponding to a client device. In one embodiment, the configuration information associated with one or more client devices **125** (for example) of the recipient are accessed and/or stored so as to generate one or more software profiles for the purposes of provisioning one or more virtual machines of the dynamic analysis logic system **184** as discussed further herein. It is contemplated that the forgoing analyses could also be performed by any other various analyses engines as discussed herein. Moreover, in one embodiment, configuration information that is determined by extracting the one or more recipient identifiers may be input directly to various modules of the controller logic system **170** without limitation.

Now, referring again to FIG. **1**, the metadata **142** that has been "viewed" using the various information sources as discussed herein can be combined, aggregated and/or otherwise correlated using any of various techniques to assemble and/or otherwise collect contextual information **151**. The contextual information **151** may feature aspects from one or more of the information source(s)$_n$ **150**, in various combinations, without limitation. As shown in FIG. **1**, the contextual information **151** may be considered an input to the profile generation logic **155**, which is configured so as to generate one or more software profiles **152**. To be sure, each of the various information sources as discussed herein may be considered independently or in tandem so as to determine and generate software profiles **152** for further analysis. In one embodiment, the context information **151** may represent the results of consolidation of the various metadata **142**. Additionally, or in the alternative, only certain metadata **142** is utilized to generate the one or more software profiles **152**. Such determinations with respect to which metadata **142** is used may be determined on a case-by-case basis, using experiential knowledge, machine learning, heuristics, and the like, without limitation.

With the high level of granularity based on the various analyses as discussed herein, the software profiles **152** may be configured so as to accurately simulate or mimic a client's actual software environment, along with a number of other potentially susceptible environments. Thus, the software profiles **152** may preferably feature information regarding certain application versions, that may be loaded on a particular device/manufacturer, featuring a certain operating system and/or various plug-ins.

To determine whether an object may be malware that will activate on a client's device, a generated software profile **152** will include the specific implementation of a client's environment—that is—the exact operating system, application and plug-in versions/types that are loaded on the client device **125**. In instances where generation of a software profile based on the specific implementation of a client's environment is not feasible or programmed, it is contemplated that a software profile featuring the closest versions with the respect to specific client software implementations may be used and/or generated by the profile generation logic **155**. In one embodiment, certain "pre-set" software profiles **152** may be available for use, such that modifications and/or updates thereto may be processed preferably in real-time, or near real-time. In embodiments, software profiles **152** may be implemented using various aspects of U.S. patent application Ser. No. 14/937,802 entitled "System and Method for Multi-Application, Multi-Plugin Analysis for Use in Detecting a Malicious Attack", (filed on Nov. 10, 2015), which is incorporated herein by reference in its entirety. Other software profiles **152** may include various combinations of software versions, etc. so as to ultimately determine one or more susceptible software environments. It is important to

note, therefore, that analysis of a single object and/or its corresponding metadata **142** may result in the generation of multiple software profiles **152**.

It should be understood that on certain occasions, an object including malware may not "activate" in a first client's software environment for any number of reasons, for example because the first client's device has software versions or configurations that are updated and/or patched with regard to the vulnerabilities that are exploited by the object. However if the first client communicates the object to a second client (such as via electronic mail), and if the second client has a software environment different than the first client, the malware contained in the object may activate in the second client's software environment. It is envisioned, therefore, that generating a plurality of software profiles **152** may desirably assist in identifying an object as being malicious, regardless of the vulnerabilities that are specific to the first client's software environment, for example.

Considering that more than one software profile **152** may be generated with respect to the analyses as discussed herein, it is contemplated that priorities may be assigned to each software profile **152** so that in the event that there is a queue for further analysis, for example, an efficient processing order may be established and preferably stored on the data store **160**. For example, when implemented in the field, a particular client may determine that they only care about the maliciousness of an object if there is potential for the object to do harm in their specific computing environment. As such, the software profile **152** associated with the client's environment may be associated with a higher priority as compared with other generated software profiles. In embodiments, it may be desirable to perform a more comprehensive analysis with respect to an object—that is—to analyze all possible combinations of various software profiles so as to determine maliciousness, or some sub-set thereof. Such analyses may be performed using the SED system **100**, and/or the threat intelligence network **130**.

Accordingly, it is envisioned that in one embodiment, the prioritization logic **140** may be configured to assign initial priorities with respect to the generated software profiles **152**. Although the prioritization logic **140** is shown in the network traffic engine **135**, it is envisioned that priorities may also be assigned with respect to one or more software profiles using the profile generation logic **155**. In one embodiment, the prioritization logic **140** may be configured so as to receive data associated with the one or more software profiles **152** so as to construct a data structure, including by way of non-limiting example, wherein the software profiles are stored in an ordered fashion, e.g., in a hierarchical structure or ordered array, or are each tagged or associated with a priority value, thereby providing a structural representation of priorities associated with the generated software profiles **152**. Once the one or more prioritized software profiles **153** have been generated and assigned a priority, they may be communicated and stored on the data store **160**, for example.

At the controller logic system **170**, one or more work orders may be generated as discussed further herein. In one embodiment, some or all of the data associated with the prioritized software profiles **153** may be automatically communicated to the controller logic system **170**. However, it is envisioned that the prioritized software profiles **153** may also be routed to the controller logic system **170** using pull coding, such that the initial request for the prioritized software profiles **153** originates from the controller logic system **170**. It should be appreciated, however, that other routing methodologies such as push technologies, or some hybrid of push/pull technologies are within the scope and spirit of the present disclosure.

Referring still to FIG. **1**, in one embodiment, the controller logic system **170** features configuration engine **172**, priority logic system **178**, and the dynamic analysis logic system **184**. The configuration engine **172** features work order generation logic **174** that may be configured to generate one or more "work orders" **154** based on the prioritized software profiles **153** that are received from the data store **160**. In one embodiment, each work order may feature a specific software profile **153**. However, each work order may feature multiple software profiles as well, without limitation. In one embodiment, the controller logic system **170** may receive only a portion of the software profile information (e.g., application version) and may determine additional profile information (e.g., operating system version or other application information) based, in part, on known prior correlations and/or patterns of profiles exhibiting malicious behaviors in the past (i.e., historical or experiential knowledge). This information may be stored on data stores **176** and/or **182**, for example, without limitation. It is envisioned that such correlations and/or profiles may be updated from an external source, such as via the threat intelligence network **130**, in a periodic or aperiodic manner.

Moreover, certain work orders **154** may be generated even if the various analyses with respect to the object result in a determination that a particular software profile corresponding to a client device **125** is not susceptible (as discussed herein). By way of illustrative example, consider the situation in which a first client receives a malicious object as an attachment via electronic mail, and/or otherwise downloads a malicious object from the Internet. In either case, it is contemplated that the malicious object may be configured so as to exploit one or more vulnerabilities that are not exploitable on the first client's device because the client device has software versions or configurations that are updated and/or patched with regard to the vulnerabilities that are exploited by the malicious object. However, the object engine **148** may observe one or more characteristics that indicate that the object is attempting to target a certain application version, using profiles that mimic other clients' environments within an enterprise, for example. Consequently, it is envisioned that a plurality of work orders **154** may be generated using the embodiments discussed herein.

Thus, because certain targeting characteristics have been determined, one or more work orders **154** may be generated. In one embodiment, a first work order may feature software profile information as determined from the client device **125**, for example, using techniques as discussed herein. Moreover, a second work order featuring one or more software profiles may be generated, based at least in part on the information determined by analyzing various "views" with respect to the object, as discussed herein. It should be appreciated that once the second work order is generated and the software profiles therein analyzed, one or more software profiles of the second work order may be marked as malicious. As such, one or more alerts may be generated in embodiments of this disclosure. Therefore, using the techniques as discussed herein, objects observed and/or analyzed in a client environment may be used to determine maliciousness with respect to the client environment, as well as other potentially susceptible environments.

Once the work orders **154** are generated, they may be communicated to the priority logic system **178**, so that a final order of analysis may be established with respect to the prioritized software profiles **153**. More specifically, analysis scheduling logic **180** may be configured to schedule each of

the work orders **154** for dynamic analysis, based in part on the initial priority values. It should be understood, however, that the analysis scheduling logic **180** may update the initial priority values based on a plurality of circumstance-specific details, including, by way of non-limiting example, system resources (capacity and/or bandwidth); customer-defined rules (e.g. if only one system is affected, the analysis priority may be reduced; alternatively, if a high-profile personality is targeted, such as the CEO, the analysis priority may be increased); and scheduling rules provided from a remote management console, and/or network, without limitation. In other words, the analysis scheduling logic **180** may be adapted to update priorities on a case-by-case basis. Moreover, the analysis scheduling logic **180** may determine whether and/or when to conduct a dynamic analysis with respect to a particular software profile relative to other software profiles.

B. General Analysis Methodology

Once a final order of analysis has been established, the various work orders **154** may be analyzed using the dynamic analysis logic system **184**. Herein, the dynamic analysis logic system **184** comprises a virtual machine manager **186**, a data store **188** and one or more virtual machines (VMs) **187**, namely VM_1 $\mathbf{187}_1$-VM_M $\mathbf{187}_M$ (M≥1) that may be configured to perform in-depth dynamic analysis with respect to one or more work orders **154**. In general, the dynamic analysis logic system **184** is adapted to provision one or more VMs $\mathbf{187}_1$-$\mathbf{187}_M$ (e.g., VM_1-VM_M) to determine one or more susceptible software environments using the work orders **154** as discussed herein. Moreover, malware behaviors may be observed by simulating one or malicious objects within one or more run-time environments as expected based on the type of object.

More specifically, the dynamic analysis logic system **184** may observe behaviors with respect to the object, in order to make one or more determinations with respect to maliciousness. Using the dynamic analysis logic system **184**, certain artifacts with respect to a type of malware attack may be analyzed. For example, dynamic analysis logic system **184** may consider propagation mechanisms of the object, to determine how instructions and/or behaviors associated with the object communicate or navigate across and/or through a network, for example. More specifically, the dynamic analysis logic system **184** may consider how an object behaves to determine one more susceptible software environments using one or more software profiles as discussed herein. Consequently, it is important to note that the dynamic analysis logic system **184** may be configured to determine i) one or more susceptible environments; and ii) one or more malicious behaviors with respect to the object.

In one embodiment, the dynamic analysis logic system **184** comprises a plurality of rules that may be stored on the data store **188**, for example, wherein the rules may be applied to object(s) to determine compliance thereto. The rules may be based on experiential knowledge, including but not limited to machine learning; pattern matches; heuristic, probabilistic, or determinative analysis results; analyzed deviations in messaging practices set forth in applicable communication protocols (e.g., HTTP, TCP, etc.); analyzed compliance with certain message formats established for the protocol (e.g., out-of-order commands); and/or analyzed header or payload parameters to determine compliance. It is envisioned that the rules may be updated from an external source, such as via the threat intelligence network **130**, in a periodic or aperiodic manner.

According to one embodiment, each of the VMs **187** (e.g., VM_1-VM_M) within the dynamic analysis logic system **184** may be configured with a software profile corresponding to a software image stored within the data store **188** that is communicatively coupled with the virtual machine manager **186**. Additionally, or in the alternative, the VMs **187** (e.g., VM_1-VM_M) may be configured according to one or more prevalent software profiles and/or configurations, used by a network device within a particular enterprise network (e.g., client device **125**), or any specific environment, and/or any specific version that is associated with the object to be processed, including software such as a web browser application, PDF™ reader application, PowerPoint™ application, or the like.

However, it should be understood for a known vulnerability that the VMs **187** (e.g., VM_1-VM_M) may be more narrowly configured to profiles associated with vulnerable modules. For example, if the access source is attempting to access a particular application, email address book, etc., then VM_1-VM_M **187** may be configured accordingly.

The classification engine **189** may be configured to receive VM-based results from the dynamic analysis logic system **184**, for example. According to one embodiment of the disclosure, the classification engine **189** comprises weighting logic **191** and score determination logic **193**. The weighting logic **191** may be configured to apply weighting to results provided from the dynamic analysis logic system **184**. Thereafter, the classification engine **189** may route the classification results **197** comprising the weighting applied to the VM-based results to the reporting logic engine **190**. The classification results **197** may, among others, classify any malware detected into a family of malware, describe the malware, describe and/or identify one or more susceptible software environments (e.g., susceptible software profiles), and provide metadata associated with any object(s) and/or environments within which the malware were detected.

In the event that i) one or more susceptible environments; and/or ii) one or more malicious behaviors with respect to the object are determined, the alert generation logic **192** of the reporting engine **190** may generate an alert for the client device **125** and/or route the alert to the threat intelligence network **130** for further analysis. In addition, the alert may be routed to the communication network **110** for further analysis by a network administrator, for example. The reporting engine **190** may issue an alert **196** (e.g., an email message, text message, display screen image, etc.) to security administrators for example, communicating the urgency in handling one or more predicted attacks.

The alert **196** may trigger a further analysis of the object. The reporting engine **190** may be configured so as to store analysis results in the data store **194** for future reference. Specifically, the data store **194** may be configured so as to track malicious actions and vulnerabilities, and correlate such data with the context information **151**. Moreover, once one or more susceptible environments are detected, various information with regard to the one or more software profiles may be stored on the data store **194**, for example. Moreover, the threat intelligence network **130** may be updated with such information so that the specific configurations and/or combinations of software profiles in which malware behavior was detected may be relied upon and/or accessed for future purposes. In one embodiment, the IPS Signature Logic $\mathbf{146}_2$ may be updated so that the most recent signatures are available for future reference.

Preferably, the reporting engine **190** may include instructions and/or information that may be used to rapidly (and in some embodiments, in real-time) cause one or more susceptible environments to be updated, by way of application updates, operating system updates, plug-in updates, and the

like, without limitation. In one embodiment, such instructions and/or information may be communicated to the threat intelligence network **130**, so that any other networks and/or client devices that are communicatively coupled to the threat intelligence network **130** may be similarly updated.

Finally, the reporting engine **190** may issue an alert or report **196** (e.g., an email message, text message, display screen image, etc.) to security administrators for example, communicating the urgency in handling and preferably preventing one or more predicted attacks. The alert **196** may also include detailed instructions pertaining to specific attack types, potential issues thereto, security holes, and best practices to prevent one or more predicted malware attacks. It should be appreciated that the reporting engine **190** may also be configured to update the threat intelligence network **130** with information corresponding to the instantly analyzed object for future reference and/or further processing.

Referring now to FIG. **2**, an exemplary embodiment of a representation of the SED system **100** of FIG. **1** is shown. In one embodiment, a network appliance **200** may feature a housing **201**, which is made entirely or partially of a rigid material (e.g., hardened plastic, metal, glass, composite or any combination thereof) that protect circuitry within the housing **201**, namely one or more processors **285** that are coupled to communication interface logic **286** via a first transmission medium **287**. Communication interface logic **286** enables communications with other SED systems **100** and/or the threat intelligence network **130** of FIG. **1**, for example. According to one embodiment of the disclosure, communication interface logic **286** may be implemented as a physical interface including one or more ports for wired connectors. Additionally, or in the alternative, communication interface logic **286** may be implemented with one or more radio units for supporting wireless communications with other electronic devices.

Processor(s) **285** may further be coupled to persistent storage **290** via a second transmission medium **288**. According to one embodiment of the disclosure, persistent storage **290** may include the SED system **100**, which in one embodiment comprises (a) network traffic engine **135**; (b) information source logic **145**; (c) profile generation logic **155**; (d) reporting engine **190**; (e) controller logic system **170**; (f) dynamic analysis logic system **184**; and (g) classification engine **189**. It is envisioned that one or more of these systems (or logic units) could be implemented externally from the SED system **100** without extending beyond the spirit and scope of the present disclosure.

Although not illustrated, it is contemplated that all or a portion of the functionality of the susceptible environment detection system may be deployed at part of cloud services. For instance, dynamic analysis logic system may be deployed in cloud services, which conducts behavioral analysis on an object. Alternatively, at least some functionality of the controller logic system may be deployed within cloud services. Therefore, it is within the spirit of the invention that the susceptible environment detection system may reside entirely within a single network appliance, or may be deployed as a decentralized system with different functionality being handled by different network devices, including cloud services.

C. General Architecture of a Mobile Device Deploying an Endpoint Application

Referring to FIG. **3**, a plurality of mobile devices **334**A-**334**C deploying an endpoint application **336**A-**336**C is shown, communicatively coupled to the threat intelligence network **130**. In general, a network environment **300** is shown, wherein a router **113** is communicatively coupled to the threat intelligence network **130** and Internet **332**. The router is also communicatively coupled to an optional firewall **115**, which itself may be communicatively coupled to a network switch **120**. As shown, the plurality of mobile devices **334**A-**334**C may also be communicatively coupled to the threat intelligence network **130** and Internet **332** using any transmission medium, including without limitation, wireless and hardwired connection schemes. It is envisioned that an exemplary endpoint application **336**A-**336**C corresponding to each of the mobile devices may be installed to detect software profiles and ultimately determine one or more susceptible software environments. Of course, although only three mobile devices **334**A-**334**C are shown in FIG. **3**, any number of devices may have the exemplary endpoint application **336**A-**336**C loaded thereon. In one embodiment, the SED application may be a downloaded from an app store, web site, etc., and thus stored and made locally available with respect to a mobile device.

Referring to FIG. **4**, a mobile device **400** may be configured to deploy the endpoint application **136** of FIG. **3**. As shown in FIG. **4**, for illustrative purposes, the network device **400** is represented as a mobile device (e.g., smartphone, tablet, laptop computer, netbook, etc.). The mobile device **400** includes a display screen **402**, one or more processors **485**, a receiver and/or transmitter (e.g. transceiver) such as an antenna **455**, and communication interface logic **486**. In one embodiment, the endpoint application **336** comprises implementation detection logic **452**, reporting logic **490**, and user interface logic **494**.

As shown, the endpoint application **336** communicates the output of the implementation detection logic **452** directly to the SED system **100** for further analysis. In one embodiment, the implementation detection logic **452** may be configured to track and/or otherwise store information regarding specific implementation details of the device **400**, including the software loaded and/or running on the device. For example, such information may include, by way of non-limiting example, software types/versions, operating system types/versions, and or information regarding one or more plug-ins. In one embodiment, it is envisioned that the endpoint application **336** may be in operable communication with the endpoint monitor $\mathbf{147}_2$ of the SED system **100**. As such, the endpoint application **336** may be considered to be substantially similar to the endpoint application $\mathbf{147}_1$ of FIG. **1**. Once the analysis of an object is complete as discussed herein, for example using the SED system **100**, the results may be communicated to the reporting engine **490**, such that an alert or report (e.g., an email message, text message, display screen image, etc.) is generated to security administrators or the user, for example, communicating the urgency in handling one or more predicted attacks using the user interface logic **494**.

Referring now to FIG. **5**, a flowchart of an exemplary method for configuring a dynamic analysis system using a plurality of information sources to determine a susceptible software environment is shown. For example, at block **502**, network traffic is analyzed, using the network traffic engine **135**, for example. At block **504**, one or more software profiles are generated based on context information derived from analyzing various sources of information. More specifically, various "views" of a suspicious object may be gathered from the network level, application level, etc., so as to determine appropriate software profiles for use in monitoring malicious behaviors of an object. It is envisioned that various modules may also serve as information sources, as discussed herein. At block **506**, an initial priority value may be associated with each software profile, which may be

stored on data store **160**. The initial priority values may be representative of rules that have been established/determined by customers, and/or updated from a central management system, such as a threat intelligence network **130**.

At block **508**, the configuration engine **172** may generate "work orders", such that each work order describes one or more proposed software profiles. At block **510**, analysis scheduling logic **180** may be configured to schedule each of the work orders for dynamic analysis, based on the initially assigned priorities. However, the analysis scheduling logic **180** may update the initial priorities contingent upon system capacity; customer-defined rules; scheduling rules provided from a remote management console; and the like, without limitation. In other words, the analysis scheduling logic **180** may be used to establish a final priority order with respect to the behavioral analysis of one or more software profiles.

At block **512**, once the final order of analysis has been established, the dynamic analysis logic system **184** may analyze the various work orders **154** in order of priority. In one embodiment, it is envisioned that various work orders may be concurrently run in the same virtual machine, or concurrently run in a plurality of virtual machines so as to determine i) maliciousness with respect to the object; and/or ii) one or more susceptible environments. The results of the virtual machines may then be classified, using weighting logic and/or score determination logic, for example, as discussed herein. At block **514**, if maliciousness is confirmed with regard to the object; and/or one or more susceptible environments, an alert **196** is generated. The alert may correspond to any of various malware attack types, including without limitation, phishing campaigns, Advanced Persistent Threats (APT), Point-Of-Sales attacks (POS), Crimeware attacks, and the like. Moreover, the information regarding the susceptible environments may include certain version information with respect to any of various applications, operating systems, and/or plug-ins. Finally, at block **516**, relevant data stores may be updated in view of the determined susceptible environments and/or malicious objects.

D. Exemplary Alert

Referring to FIG. **6**, a network device may be configured to receive an alert or report **280**. In FIG. **6**, for illustrative purposes, the network device is represented as a mobile network device **600** (e.g., smartphone, tablet, laptop computer, netbook, etc.). The mobile network device **600** includes a display screen **610**; a receiver and/or transmitter (e.g. transceiver) such as an antenna **611**.

In one embodiment, the exemplary alert **196** (e.g., an object, text message, display screen image, etc.) is communicated to security administrators for receipt/viewing on the mobile network device **600**. For example, the exemplary alert **196** may indicate the urgency in handling one or more attacks based on the maliciousness of the object **128**. Furthermore, the exemplary alert **196** may comprise instructions so as to prevent one or more predicted malware attacks. The exemplary alert **196** may also comprise information with respect to the origination of the potential attack, along with suspicious behavior that might confirm the attack with respect to a potential target. In one embodiment, the exemplary alert **196** may include scores and/or threat levels based on the various examination techniques as discussed herein. Moreover, the alert **196** may feature information regarding the susceptible environments, including, for example, version information with respect to any of various applications, operating systems, and/or plug-ins.

In the foregoing description, the invention is described with reference to specific exemplary embodiments thereof. However, it will be evident that various modifications and changes may be made thereto without departing from the broader spirit and scope of the invention as set forth in the appended claims.

What is claimed is:

1. A computerized method, comprising:

analyzing a plurality of information sources to determine context information with respect to an object, wherein at least a first information source of the plurality of information sources comprises configuration information determined from a client device;

generating one or more software profiles based on the context information, the one or more software profiles being used to provision one or more virtual machines of a dynamic analysis logic system;

generating one or more work orders corresponding to the one or more software profiles;

assigning a priority order to the one or more work orders;

scheduling each of the one or more virtual machines to conduct, in accordance with the assigned priority order, a dynamic analysis of the object;

performing the one or more dynamic analyses of the object by the one or more virtual machines that produce results, each result from a dynamic analysis of the one or more dynamic analyses identifies a susceptible software environment including a susceptible software profile and one or more anomalous behaviors of the object during processing;

classifying the object as malware based, at least part, on the results of the one or more dynamic analyses; and

generating an alert comprising details determined at least in part from the results of the one or more dynamic analyses.

2. The computerized method of claim **1**, wherein the details of the alert include i) information that identifies the malware, and ii) information regarding the susceptible software environment.

3. The computerized method of claim **2**, wherein the alert may be used to update the client device, the susceptible software environment of the client device, and a threat intelligence network in real time.

4. The computerized method of claim **1**, wherein the plurality of information sources comprise an object engine and at least one of an endpoint application and an application version update tracker.

5. The computerized method of claim **4**, wherein the application version update tracker is configured to inspect a network stream to determine information specific to updates with respect to the client device.

6. The computerized method of claim **4**, wherein the object engine is configured to observe characteristics of the object and compare the observed characteristics to characteristics stored on one or more cyber-security databases.

7. The computerized method of claim **4**, wherein the endpoint application is configured to report the configuration information.

8. The computerized method of claim **7**, wherein the configuration information comprises details regarding software loaded on the client device, wherein the software comprises any of various applications, operating systems, and plug-ins.

9. The computerized method of claim **1**, wherein the priority order may be updated prior to the dynamic analysis using at least one of system capacity, customer-defined rules, and scheduling rules.

10. The computerized method of claim **4**, wherein the plurality of information sources further comprise version

information with respect to a computing environment that is input by one or more network administrators.

11. A system configured to analyze an object, comprising:

one or more processors;

a memory communicatively coupled to the one or more processors, the memory to store logic that, when executed by the one or more processors, to

generate one or more software profiles based on the context information, the one or more software profiles being used to provision one or more virtual machines of a dynamic analysis logic system;

generate one or more work orders corresponding to the one or more software profiles;

assign a priority order to the one or more work orders;

schedule each of the one or more virtual machines to conduct, in accordance with the assigned priority order, a dynamic analysis of the object;

perform the one or more dynamic analyses of the object by the one or more virtual machines that produce results, each result from a dynamic analysis of the one or more dynamic analyses identifies a susceptible software environment including a susceptible software profile and one or more anomalous behaviors of the object during processing;

classify the object as malware based, at least part, on the results of the one or more dynamic analyses; and

generate an alert comprising details determined at least in part from the results of the one or more dynamic analyses.

12. The system of claim **11**, wherein the details of the alert include i) information that identifies the malware, and ii) information regarding the susceptible software environment.

13. The system of claim **12**, wherein the alert may be used to update one or more client devices or the susceptible software environment in real time.

14. The system of claim **11**, wherein the logic comprises an object engine and at least one of an endpoint application and an application version update tracker.

15. The system of claim **14**, wherein the application version update tracker is configured to inspect a network stream to determine information specific to updates with respect to a client device.

16. The system of claim **14**, wherein the object engine is configured to observe characteristics of the object and compare the observed characteristics to characteristics stored on one or more cyber-security databases.

17. The system of claim **14**, wherein the endpoint application is configured to report configuration information determined from a client device.

18. The system of claim **17**, wherein the configuration information comprises details regarding software loaded on the client device, wherein the software comprises any of various applications, operating systems, and plug-ins.

19. The system of claim **11**, wherein a threat intelligence network is updated based on information regarding the one or more susceptible environments.

20. The system of claim **11**, wherein the priority order may be updated prior to the dynamic analysis using at least one of system capacity; customer-defined rules; and scheduling rules provided from a remote management console.

* * * * *