14230 U.S. PTO
011405

PTO/SB/16 (12-04)

14044 U.S. PTO
60/643829
011405

PROVISIONAL APPLICATION FOR PATENT COVER SHEET

This is a request for filing a PROVISIONAL APPLICATION FOR PATENT under 37 CFR 1.53(c).

Express Mail Label No. EV 323 383 142 US

INVENTOR(S)

Given Name (first and middle [if any])	Family Name or Surname	Residence (City and either State or Foreign Country)
Vasudevan	Ganesan	Cupertino, CA

Additional inventors are being named on the _____ *separately numbered sheets attached hereto*

TITLE OF THE INVENTION (500 characters max)

TELEPHONE COMMUNICATIONS PROCESSING CONTROLLER

Direct all correspondence to: **CORRESPONDENCE ADDRESS**

☒ The address corresponding to Customer Number: **20350**

OR

☐ Firm or Individual Name

Address

City	State	Zip
Country	Telephone	Fax

ENCLOSED APPLICATION PARTS ***(check all that apply)***

☒ Application Data Sheet. See 37 CFR 1.76

☒ Specification *Number of Pages* 7

☒ Drawing(s) *Number of Sheets* 1

☐ CD(s), Number of CDs _____

☐ Other (specify) _____

Application Size Fee: If the specification and drawings exceed 100 sheets of paper, the application size fee due is $250 ($125 for small entity) for each additional 50 sheets or fraction thereof. See 35 U.S.C. 41(a)(1)(G) and 37 CFR 1.16(s).

METHOD OF PAYMENT OF FILING FEES AND APPLICATION SIZE FEE FOR THIS PROVISIONAL APPLICATION FOR PATENT

☒ Applicant claims small entity status. See 37 CFR 1.27.

☐ A check or money order is enclosed to cover the filing fee and application size fee (if applicable).

☐ Payment by credit card. Form PTO-2038 is attached.

☒ The Director is hereby authorized to charge the filing fee and application size fee (if applicable) or credit any overpayment to Deposit Account Number: 20-1430. A duplicative copy of this form is enclosed for fee processing.

TOTAL FEE AMOUNT ($): 100

The invention was made by an agency of the United States Government or under a contract with an agency of the United States Government.

☒ No.

☐ Yes, the name of the U.S. Government agency and the Government contract number are: _____

[Page 1 of 2]

SIGNATURE _____ Date 01/14/05

TYPED or PRINTED NAME Ardeshir Tabibi

REGISTRATION NO. 48,750 (*if appropriate*)

TELEPHONE 650-326-2400

Docket Number: 025717-000300US

USE ONLY FOR FILING A PROVISIONAL APPLICATION FOR PATENT

60399529 v1

Attorney Docket No.: 025717-000300US

PROVISIONAL

PATENT APPLICATION

TELEPHONE COMMUNICATIONS PROCESSING CONTROLLER

Inventor: Vasudevan Ganesan, a citizen of Canada, residing at
19500 Pruneridge Ave., #6111
Cupertino, CA 95014

Assignee: Hava Corp.
19500 Pruneridge Ave., #6111
Cupertino, CA 95014

Entity: Small business concern

TOWNSEND and TOWNSEND and CREW LLP
Two Embarcadero Center, Eighth Floor
San Francisco, California 94111-3834
Tel: 650-326-2400

TELEPHONE COMMUNICATIONS PROCESSING CONTROLLER

BACKGROUND OF THE INVENTION

Technical Field Of The Invention

[0001] The present invention relates to the field of telephone (VOIP, Cell, Wired (Landline)) communication processing for handling telephone communications (voice, data, video) when seamlessly switching (roaming) communications among WIFI (IEEE802.11 ab/g/, WiMax, etc), public cellular (GSM/CDMA/CDMA2000, etc.) and public circuit switched (Wired, Landline) networks.

[0002] The current telephone communication occurs over public cellular (GSM/CDMA/CDMA2000, etc.), or, Voice Over Internet (VOIP), or, Circuit Switched (Wired/landlines) networks.

[0003] Currently a cellular phone works only in the cellular networks, a VOIP phone only works in VOIP networks, and Wired (landline) phone works only in Circuit Switched Networks. This implies that telephone communications cannot be seamlessly switched (roam) among Cellular, VOIP and Circuit Switched networks without losing the present (in progress) communications.

[0004] The VOIP phone which works only in the WIFI (hotspot) area offers cheaper telephone communications. The WIFI (hotspot) availability is limited in geographical areas. The Cell Phone works only in Cellular networks but is expensive for telephone communications. The Cell availability covers a much wider, extensive geographical area. The wired (landline) phone which works only in circuit switched (wired) networks, does not offer extensive telephone communication features, like for example video.

[0005] The present invention describes a seamless switching (roaming) mechanism without losing the present, in-progress communications among VOIP/Cell/Wired(landline) to enable offering of a telephone systems that uses VOIP, Cell and wired (landline) systems to optimize cost and performance and telephone communication features.

BRIEF SUMMARY OF THE INVENTION

[0006] To address the above-discussed deficiencies of the prior art, it is a primary object of the present invention to provide a seamless switching (roaming) among VOIP/Cell/Wired(Landline) networks without losing the present, in-progress telephone communication, comprising a " Telephone Communications Processing Controller (TCPC)" element to hold (not lose) the present, in progress telephone communications when switching communications between wireless public cellular network, a VOIP network and a circuit switched (wired/landline) network. According to an advantageous embodiment of the present invention, the telephone can seamlessly roam from anywhere to everywhere without losing the present, in-progress telephone communications.

[0007] The foregoing has outlined rather broadly the features and technical advantages of the present invention so that those skilled in the art may better understand the detailed description of the invention that follows. Additional features and advantages of the invention will be described hereinafter that form the subject of the claims of the invention. Those skilled in the art should appreciate that they may readily use the conception and the specific embodiments disclosed as bases for modifying or designing other structures for carrying out the same purposes of the present invention. Those skilled in the art should also realize that such equivalent constructions do not depart from the spirit and scope of the invention in its broadest form.

[0008] Before undertaking the DETAILED DESCRIPTION OF THE INVENTION below, it may be advantageous to set forth definitions of certain words and phrases used throughout this patent document: the terms "include" and "comprise," as well as derivatives thereof, mean inclusion without limitation; the term "or," is inclusive, meaning and/or; the phrases "associated with" and "associated therewith," as well as derivatives thereof, may mean to include, be included within, interconnect with, contain, be contained within, connect to or with, couple to or with, be communicable with, cooperate with, interleave, juxtapose, be proximate to, be bound to or with, have, have a property of, or the like; and the term "controller" means any device, system or part thereof that controls at least one operation, such a device may be implemented in hardware, firmware or software, or some combination of at least two of the same. It should be noted that the functionality associated with any particular controller may be centralized or distributed, whether locally or remotely. Also the term "interface" means any device, system or part thereof that interacts between one unit and the other unit, such a device may be implemented in hardware, firmware or software, or some

combination of at least two of the same. It should be noted that the functionality associated with any particular interface might be centralized or distributed, whether locally or remotely. Definitions for certain words and phrases are provided throughout this patent document, those of ordinary skill in the art should understand that in many, if not most instances, such definitions apply to prior uses, as well as to future uses, of such defined words and phrases.

BRIEF DESCRIPTION OF THE DRAWINGS

[0009] For a more complete understanding of the present invention, and the advantages thereof, reference is now made to the following descriptions taken in conjunction with the accompanying drawings, wherein like numbers designate like objects, and in which:

[0010] FIG. 1 depicts the block diagram of the present invention, a Telephone Communications Processing Controller, that contains, the "communications processing controller" that will hold (not lose) the present, in progress telephone communications.

DETAILED DESCRIPTION OF THE INVENTION

[0011] FIG. 1 discussed above, and the various embodiments used to describe the principles of the present invention in this patent document are by way of illustration only and should not be construed in any way to limit the scope of the invention. Those skilled in the art will understand that the principles of the present invention may be implemented in any suitably arranged telephone network and implementation technologies available from time to time.

<u>In Figure 1:</u>

(1) Telephone Communications Processing Controller With public "Cellular Network" hardware and software interface and proprietary Communications Processing Controller Software.

(2) Telephone Communications Processing Controller With public "VOIP Network" hardware and software interface and proprietary Communications l Processing Controller Software.

(3) Public Telephone carrier's Cellular Network" which includes, for example, Base Station, Mobile Switching Center (MSC), SMC, etc.

(4) Public Telephone Carrier's VOIP Network", which includes, for example, VOIP Gatekeeper, VOIP Gateways, etc.

(5) Public Telephone Carrier's "Center Office Switch" to handle Landline (Wired) communications.

(A) Telephone Carrier's Interface Between Cell Phone and Cell Network.

(B) Telephone carrier's Interface Between VOIP Phone and VOIP Network.

(C) TelePhone Communications Processing Controller Software Interface To Cell Telephone Carrier's Cell Network Software Interface.

(D) Telephone Communications Processing Controller Software Interface To VOIP Telephone Carrier's VOIP Network Software Interface.

(E) Public Telephone Carrier's Cell Network Interface to PSTN.

(F) Public Telephone Carrier's VOIP Network Interface to PSTN.

(I) Public Telephone Carrier's PSTN Interface to Cell Network.

(J) Public Telephone Carrier's PSTN Interface to VOIP Network.

(K) Public Telephone Carrier's PSTN Interface to Center Office Switch.

(L) Public Telephone Carrier's Interface Between Cell Network and Cell Phone.

(M) Public Telephone Carrier's Interface Between VOIP Network and VOIP Phone.

(N) Public Telephone Carrier's Interface Between Center Office Switch and Landline (Wired) Phone.

[0012] Telephone Communications Processing Controller Software (TPCS) resides in Telephone Communications Processing Controller (TCPC enables to hold the present, in progress telephone communication between caller/called without dropping (losing, hanging up) when seamless switching between, to and from, VOIP/Cellular/wired (landline) networks.

<u>Telephone Communications Sequence:</u>

[0013] A telephone communication can be initiated using VOIP while the in WIFI (hotspot)

[0014] A telephone communication can be initiated using cellular while in cellular area.

[0015] When the Caller/called moves (roams) away and out of the WIFI (hotspot), and switching to cellular occurs, the Telephone Communications Processing Controller 1 (Fig.

1), will hold (not lose/drop) the in-progress telephone communication, thereby achieving seamless Roaming from anywhere to everywhere.

[0016] When the Caller/called moves (roams) into WIFI (hotspot) from outside, and switching to VOIP occurs, the Telephone Communications Processing Controller 2 will hold (not lose/drop) the in-progress telephone communication, thereby achieving seamless Roaming from anywhere to everywhere.

[0017] Since many modifications, variations and changes in detail can be made to the described preferred embodiment of the invention, it is intended that all matters in the foregoing description and shown in the accompanying drawings be interpreted as illustrative and not in a limiting sense. Thus, the scope of the invention should be determined by the appended claims and their legal equivalents.

WHAT IS CLAIMED IS:

1. Telephone Communication Holding, Roaming (Without Losing The Present, In Progress Communication) While Seamlessly Switching Between (Among) VOIP, CELLULAR And Circuit Switched (Wired/landline) Telephone Networks Using Telephone Communications Processing Controller.

TELEPHONE COMMUNICATIONS PROCESSING CONTROLLER

ABSTRACT OF THE DISCLOSURE

A Telephone Communications processing controller placed/embedded in public Cellular, VOIP, Circuit switched telephone network enables to hold (not lose) the present in-progress telephone communication when switching occurs between/among Cell/VOIP/Wired(landline)networks.

60399150 v1

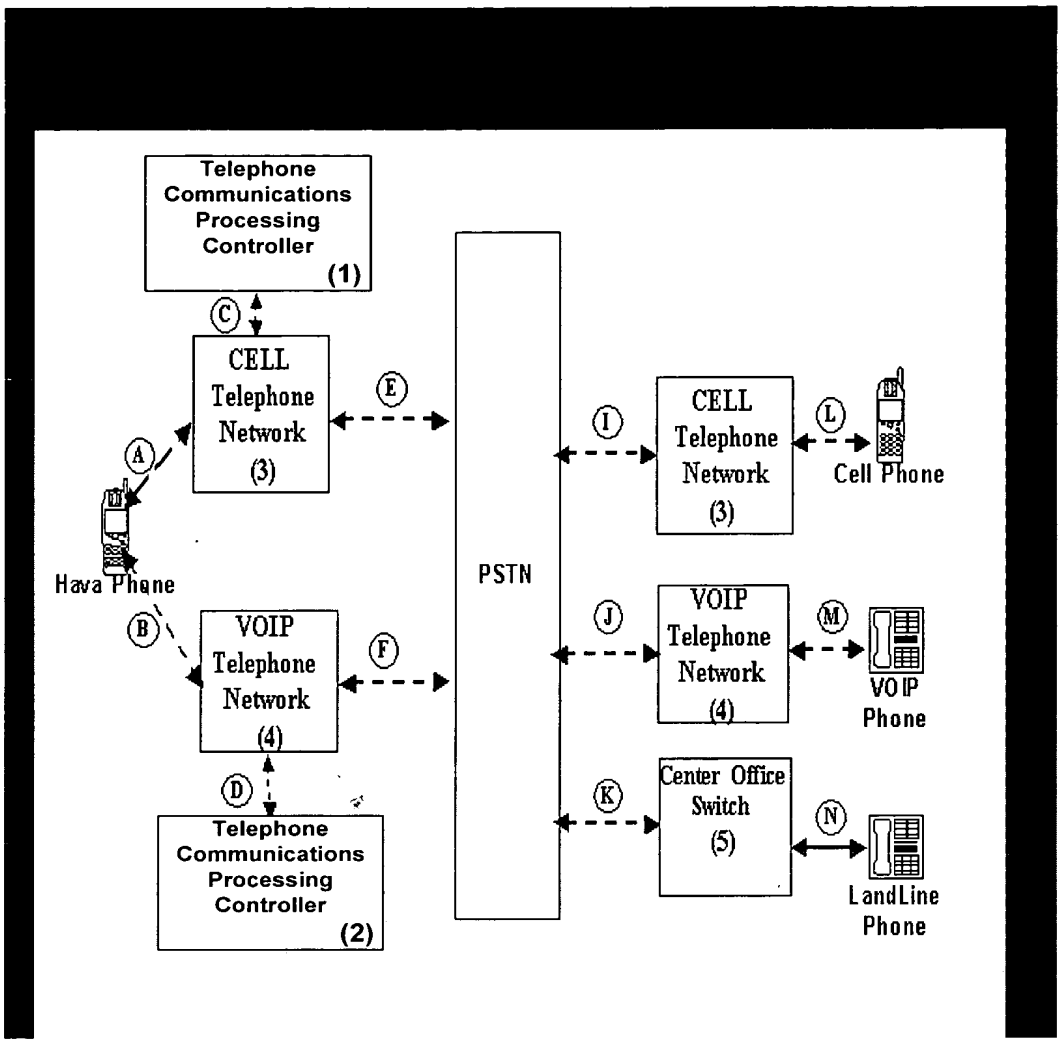
Telephone Communications Processing Controller (1)
C
CELL Telephone Network (3)
E
A
Hava Phone
B
VOIP Telephone Network (4)
F
D
Telephone Communications Processing Controller (2)
PSTN
I
CELL Telephone Network (3)
L
Cell Phone
J
VOIP Telephone Network (4)
M
VOIP Phone
K
Center Office Switch (5)
N
LandLine Phone

Figure 1

PATENT APPLICATION SERIAL NO. _____

U.S. DEPARTMENT OF COMMERCE
PATENT AND TRADEMARK OFFICE
FEE RECORD SHEET

02/07/2005 EABUBAK1 00000150 201430 60643829
01 FC:2005 100.00 DA

PTO-1556
(5/87)

*U.S. Government Printing Office: 2002 — 489-267/69033

Application Data Sheet

Application Information

Application number::	
Filing Date::	
Application Type::	Regular
Subject Matter::	Utility
Suggested classification::	
Suggested Group Art Unit::	
CD-ROM or CD-R??::	
Number of CD disks::	
Number of copies of CDs::	
Sequence Submission::	
Computer Readable Form (CRF)?::	
Number of copies of CRF::	
Title::	Telephone Communications Processing Controller Deployment
Attorney Docket Number::	025717-000300US
Request for Early Publication::	No
Request for Non-Publication::	No
Suggested Drawing Figure::	
Total Drawing Sheets::	1
Small Entity?::	Yes
Latin name::	
Variety denomination name::	
Petition included?::	No
Petition Type::	
Licensed US Govt. Agency::	
Contract or Grant Numbers One::	
Secrecy Order in Parent Appl.::	No

Applicant Information

Applicant Authority Type::	Inventor
Primary Citizenship Country::	Canada
Status::	Full Capacity
Given Name::	Vasudevan
Middle Name::	
Family Name::	Ganesan
Name Suffix::	
City of Residence::	Cupertino
State or Province of Residence::	
Country of Residence::	US
Street of Mailing Address::	19500 Pruneridge Ave., #6111
City of Mailing Address::	Cupertino
State or Province of mailing address::	CA
Country of mailing address::	US
Postal or Zip Code of mailing address::	95014

Correspondence Information

Correspondence Customer Number::	20350

Representative Information

Representative Customer Number::	20350